ALPA-BARRIE

ALL CONV. FRAMING TO CONFORM WITH PART 9 OF O.B.C. (Latest Edition) ROOF RAFTERS THAT CROSS MEET OVER TRUSSES TO BE 2X4 SPF #2 24"O.C. WITH A VERT.POST TO THE TRUSS UNDERNEATH AT EACH CROSS PT. VERT. POST LONGER THAN 6' TO HAVE LATERAL BRACING SO THAT THE DIST. BETWEEN END PT. & BETWEEN ROWS OF BRACING DOES NOT EXCEED 6'

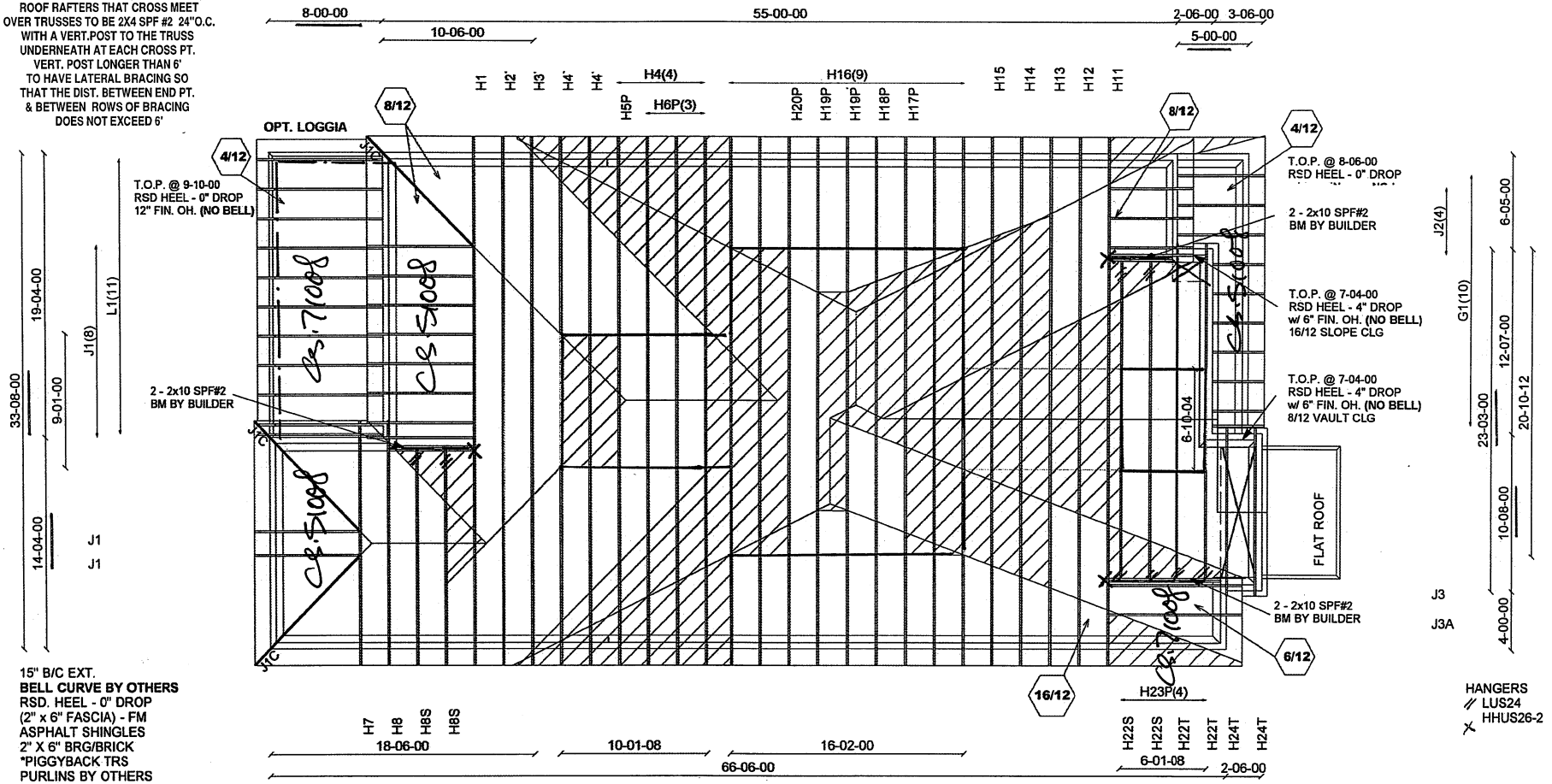

15" B/C EXT.
BELL CURVE BY OTHERS
RSD. HEEL - 0" DROP
(2" x 6" FASCIA) - FM
ASPHALT SHINGLES
2" X 6" BRG/BRICK
*PIGGYBACK TRS
PURLINS BY OTHERS

HANGERS
// LUS24
X HHUS26-2

CONVENTIONAL FRAMING BY OTHERS

OFFICE USE ONLY
ENGINEERED FROM
A-18023522 TO
A-18023544

P.L. 99352

~~HILLHURST~~ ROSEDALE

Job Track: 45147	Builder / Location: GOLD PARK HOMES / VAUGHAN	Model / Elevation: 4202 REV1	STD OR OPT 2ND FLR W/SBED OR / A OPT LOGGIA
Layout ID: 292597	Project: PINE VALLEY	THESE DRAWINGS CONSTITUTE THE PROPERTY OF ALPA ROOF TRUSSES INC., SHALL NOT BE REPRODUCED, PUBLISHED, OR REDISTRIBUTED IN ANY MANNER OR UTILIZED FOR ANY PURPOSE OTHER THAN THE MANUFACTURE OF TRUSSES BY ALPA ROOF TRUSSES INC AND WILL BE RETRACTED BY ALPA ROOF TRUSSES INC IF UTLILZED FOR ANY OTHER PURPOSE.	
Plan Log: 95914	Date: 12/27/2017 Designer: AMANDA		

ALPA-bARRIE

ALL CONV. FRAMING TO CONFORM WITH PART 9 OF O.B.C. (Latest Edition) ROOF RAFTERS THAT CROSS MEET OVER TRUSSES TO BE 2X4 SPF #2 24"O.C. WITH A VERT.POST TO THE TRUSS UNDERNEATH AT EACH CROSS PT. VERT. POST LONGER THAN 6' TO HAVE LATERAL BRACING SO THAT THE DIST. BETWEEN END PT. & BETWEEN ROWS OF BRACING DOES NOT EXCEED 6'

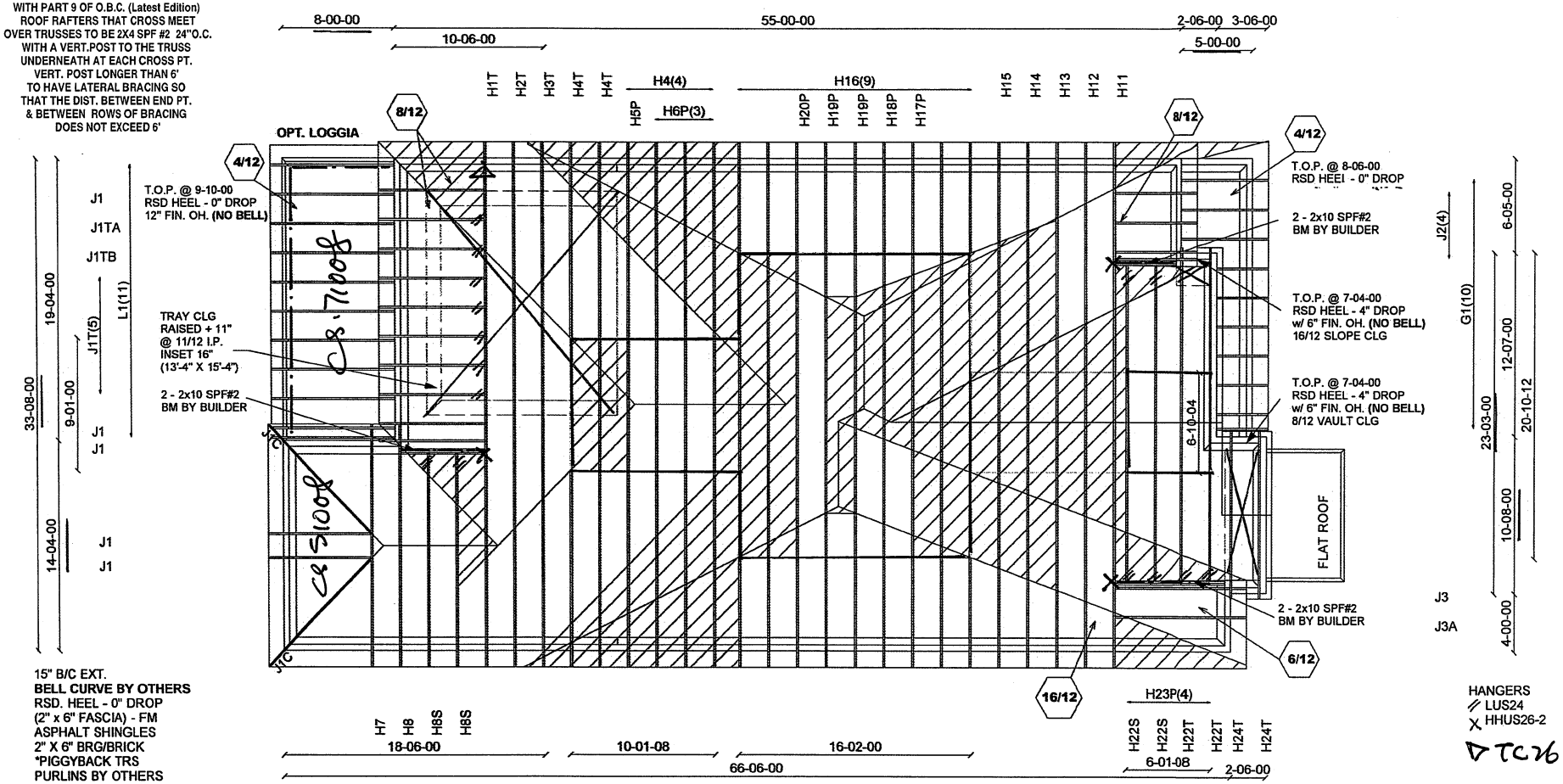

15" B/C EXT.
BELL CURVE BY OTHERS
RSD. HEEL - 0" DROP
(2" x 6" FASCIA) - FM
ASPHALT SHINGLES
2" X 6" BRG/BRICK
*PIGGYBACK TRS
PURLINS BY OTHERS

HANGERS
// LUS24
X HHUS26-2
▽ TC26

A-18023525-A-18023551

CONVENTIONAL FRAMING BY OTHERS

P.L.99352

~~HILLHURST~~ ROSEDALE

Job Track: 45147	Builder / Location: GOLD PARK HOMES / VAUGHAN	Model / Elevation: 4202 REV1	/ A OPT TRAY OR OPT 2ND FLR W/SBED OR OPT LOGGIA
Layout ID: 292598	Project: PINE VALLEY	THESE DRAWINGS CONSTITUTE THE PROPERTY OF ALPA ROOF TRUSSES INC., SHALL NOT BE REPRODUCED, PUBLISHED, OR REDISTRIBUTED IN ANY MANNER OR UTILIZED FOR ANY PURPOSE OTHER THAN THE MANUFACTURE OF TRUSSES BY ALPA ROOF TRUSSES INC AND WILL BE RETRACTED BY ALPA ROOF TRUSSES INC IF UTLILZED FOR ANY OTHER PURPOSE.	
Plan Log: 95914	Date: 12/27/2017 Designer: AMANDA		

ALPA-BARRIE

ALL CONV. FRAMING TO CONFORM WITH PART 9 OF O.B.C. (Latest Edition) ROOF RAFTERS THAT CROSS MEET OVER TRUSSES TO BE 2X4 SPF #2 24"O.C. WITH A VERT.POST TO THE TRUSS UNDERNEATH AT EACH CROSS PT. VERT. POST LONGER THAN 6' TO HAVE LATERAL BRACING SO THAT THE DIST. BETWEEN END PT. & BETWEEN ROWS OF BRACING DOES NOT EXCEED 6'

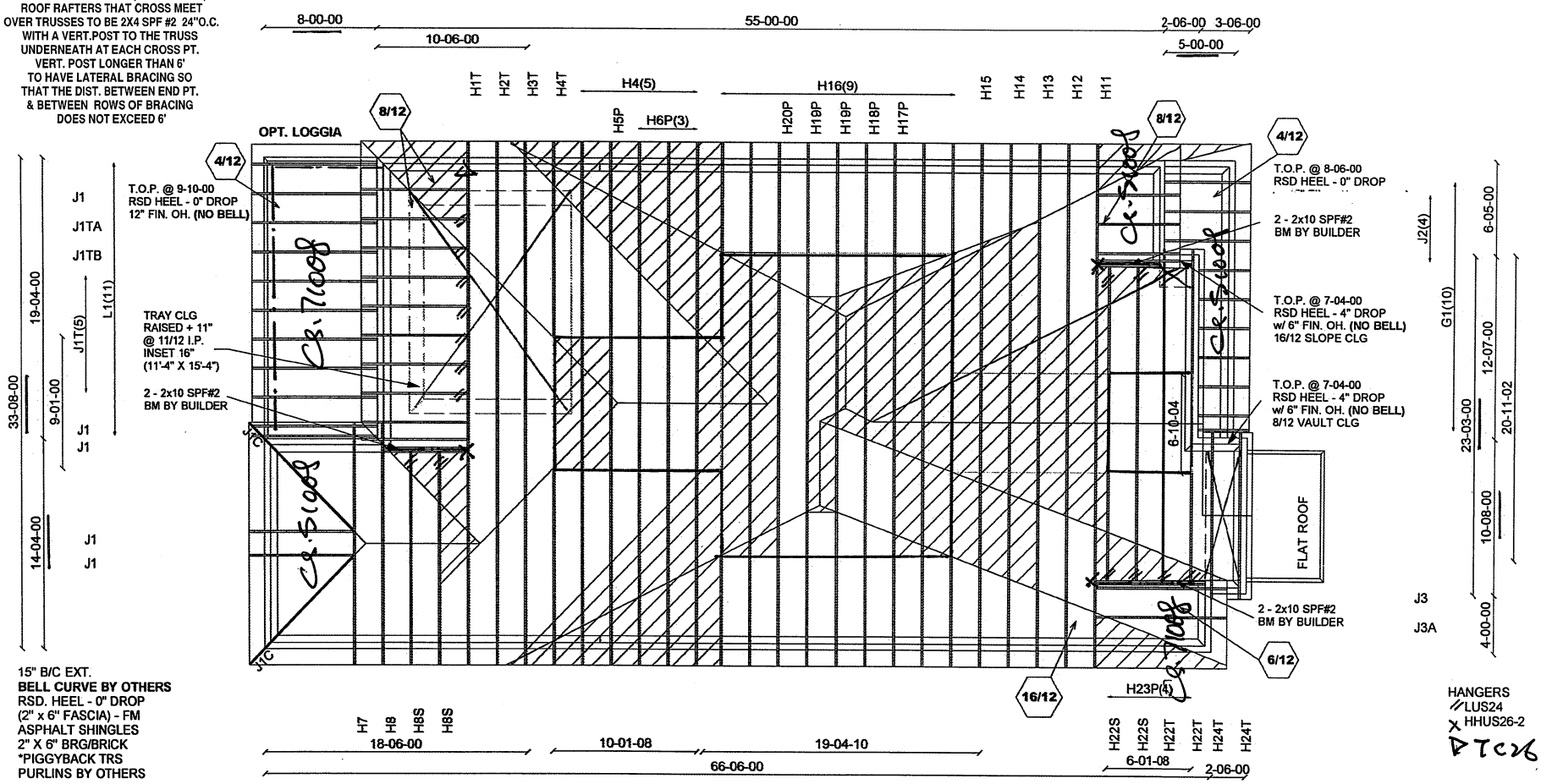

15" B/C EXT.
BELL CURVE BY OTHERS
RSD. HEEL - 0" DROP
(2" x 6" FASCIA) - FM
ASPHALT SHINGLES
2" X 6" BRG/BRICK
*PIGGYBACK TRS
PURLINS BY OTHERS

HANGERS
// LUS24
X HHUS26-2
▷ TC26

A-18023525 - A-18023551

CONVENTIONAL FRAMING BY OTHERS

P.L. 99352

~~HILLHURST~~ ROSEDALE

Job Track: 45147	Builder / Location: GOLD PARK HOMES / VAUGHAN	Model / Elevation: 4202 REV1	/ A OPT TRAY 5 BED OPT 2ND FLR W/S BED OR OPT. LOGGIA
Layout ID: 292599	Project: PINE VALLEY	THESE DRAWINGS CONSTITUTE THE PROPERTY OF ALPA ROOF TRUSSES INC., SHALL NOT BE REPRODUCED, PUBLISHED, OR REDISTRIBUTED IN ANY MANNER OR UTILIZED FOR ANY PURPOSE OTHER THAN THE MANUFACTURE OF TRUSSES BY ALPA ROOF TRUSSES INC AND WILL BE RETRACTED BY ALPA ROOF TRUSSES INC IF UTLILZED FOR ANY OTHER PURPOSE.	
Plan Log: 95914	Date: 12/27/2017 Designer: AMANDA		

Stracon Engineering Inc.

69 Graydon Crescent
Richmond Hill, Ontario
L4B 3W7
(905) 832-2250 Fax (905) 832-0286

REGISTERED PROFESSIONAL ENGINEER
DANIEL
F. FOK
PROVINCE OF ONTARIO

RESPONSIBILITIES

1. Stracon Engineering Inc. is responsible for the design of trusses as individual components.
2. It is the responsibility of others to ascertain that the design loads utilized on this drawing meet or exceed the actual dead load imposed by the structure and the live load imposed by the local building code or the authorities with jurisdictions.
3. All dimensions are to be verified by owner contractor, architect or other authority before manufacture.
4. Stracon Engineering Inc. bears no responsibility for the erection of the trusses. Persons erecting trusses are cautioned to seek professional advice regarding temporary and permanent bracing system. Bracing shown on Stracon Engineering Inc. drawings is specified for the truss as a component only and forms an integral part of the truss design.
5. It is the truss manufacture's responsibility to ensure that trusses are manufactured in conformance with Stracon Engineering Inc. specifications outlined below.

SPECIFICATIONS

1. Trusses designed by Stracon Engineering Inc. conforms to the relevant section of the Ontario Building Code of Canada (Part 9 or Part 4) or to the Canadian code for farm buildings, whichever applies to the building type indicated on the drawings as well as to the procedures established by the truss plate institute of Canada. Unit stresses used are as per CSA-086-09.
2. Lumber is to be the sizes and grade specified.
3. Moisture content of lumber is not to exceed 19% in service unless otherwise specified.
4. Lumber not to be treated with chemicals unless otherwise specified.
5. Plates shall be applied to both faces of the truss at each joint and shall be positioned as specified.
6. The top chord is assumed to be continuously laterally braced by the roof sheathing or purlins at intervals not exceeding 12.5 times in thickness.
7. Where not rigid ceiling is attached directly to the bottom chord, laterally brace the chords at intervals not exceeding 3M (10') o.c.

January 15, 2014

JOB NAME	TRUSS NAME	QUANTITY	PLY	JOB DESC.	DRWG NO.
292597	H1	1	1	TRUSS DESC.	

Alpa Roof Truss, Maple

Version 8.200 S Jan 6 2018 MiTek Industries, Inc. Sat Feb 17 14:24:12 2018 Page 1

ID:MF8iiriaTok7DlbpT4B71Xys4PG-wlEy2H6BEgl5BJlKeRj_z6P4lc8uaSzRgB16JbzkDWX

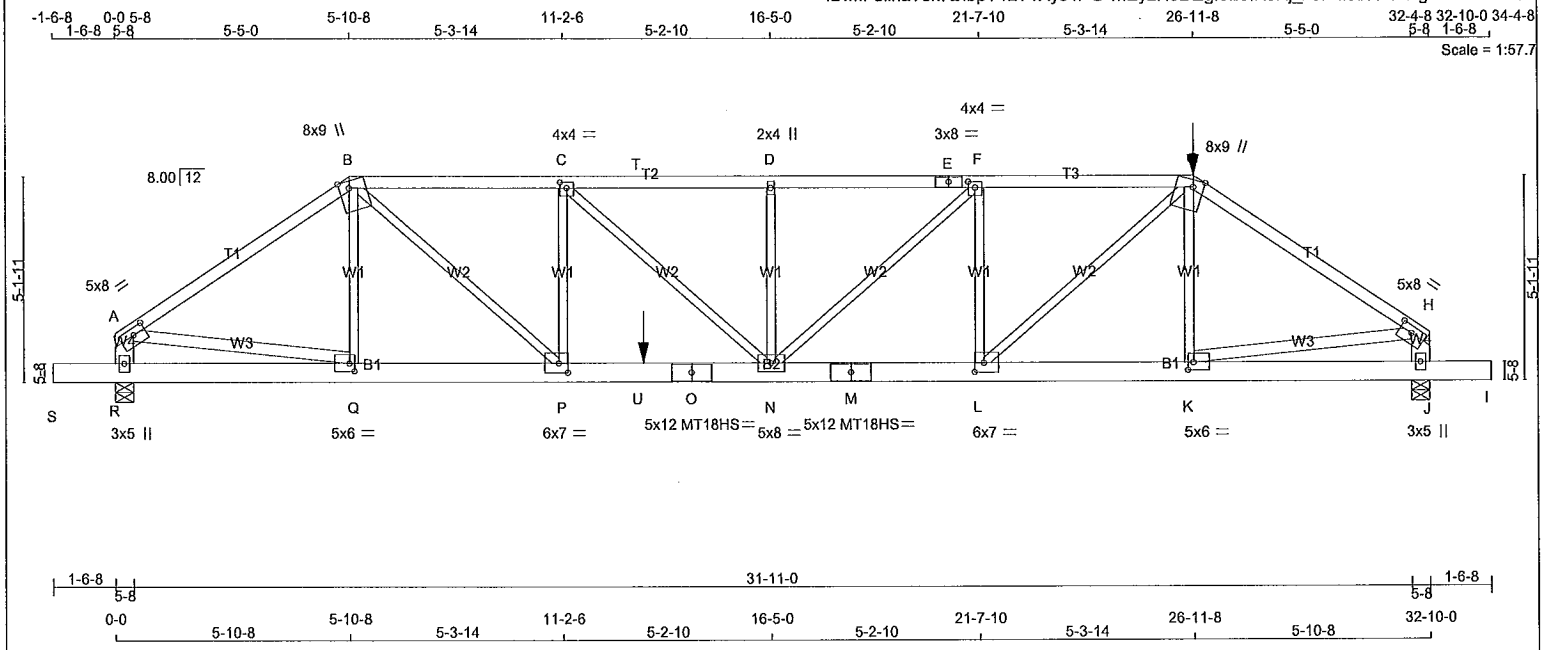

TOTAL WEIGHT = 160 lb

[M]

LUMBER

N. L. G. A. RULES

CHORDS	SIZE		LUMBER	DESCR.
A - B	2x4	DRY	1650F 1.5E	SPF
B - E	2x4	DRY	1650F 1.5E	SPF
E - G	2x4	DRY	1650F 1.5E	SPF
G - H	2x4	DRY	1650F 1.5E	SPF
R - A	2x6	DRY	No.2	SPF
J - H	2x6	DRY	No.2	SPF
S - O	2x6	DRY	1650F 1.5E	SPF
O - M	2x6	DRY	1650F 1.5E	SPF
M - I	2x6	DRY	1650F 1.5E	SPF
ALL WEBS	2x3	DRY	No.2	SPF
EXCEPT				
A - Q	2x4	DRY	No.2	SPF
K - H	2x4	DRY	No.2	SPF

DRY: SEASONED LUMBER.

PLATES (table is in inches)

JT	TYPE	PLATES	W	LEN	Y	X
A	TMVW-t	MT20	5.0	8.0	2.00	3.75
B	TTWW+m	MT20	8.0	9.0	Edge	3.00
C	TMWW-t	MT20	4.0	4.0	1.75	2.00
D	TMW+w	MT20	2.0	4.0		
E	TS-t	MT20	3.0	8.0		
F	TMWW-t	MT20	4.0	4.0	1.75	2.00
G	TTWW+m	MT20	8.0	9.0	Edge	3.00
H	TMVW-t	MT20	5.0	8.0	2.00	3.75
J	BMV1+p	MT20	3.0	5.0		
K	BMWW-t	MT20	5.0	6.0	2.25	1.50
L	BMWW-t	MT20	6.0	7.0	2.75	2.75
M	BS-t	MT18HS	5.0	12.0		
N	BMWWW-t	MT20	5.0	8.0		
O	BS-t	MT18HS	5.0	12.0		
P	BMWW-t	MT20	6.0	7.0	2.75	2.75
Q	BMWW-t	MT20	5.0	6.0	2.25	1.50
R	BMV1+p	MT20	3.0	5.0		

Edge - INDICATES REFERENCE CORNER OF PLATE TOUCHES EDGE OF CHORD.

NOTE: Lateral brace(s) shown shall be 1x4 for Part 9 design as per OBC 9.23.13.11, and no less than 2x4 for Part 4 design

REGISTERED PROFESSIONAL ENGINEER
02/17/2018
EDWIN C. FOK
PROVINCE OF ONTARIO

DIMENSIONS, SUPPORTS AND LOADINGS SPECIFIED BY FABRICATOR TO BE VERIFIED BY BUILDING DESIGNER

BEARINGS

JT	FACTORED GROSS REACTION VERT	HORZ	MAXIMUM FACTORED GROSS REACTION DOWN	HORZ	UPLIFT	INPUT BRG IN-SX	REQRD BRG IN-SX
R	2881	0	2881	0	0	5-8	3-10
J	3273	0	3273	0	0	5-8	4-14

UNFACTORED REACTIONS

JT	1ST LCASE COMBINED	MAX./MIN. COMPONENT REACTIONS SNOW	LIVE	PERM.LIVE	WIND	DEAD	SOIL
R	2043	1308 / 0	0 / 0	0 / 0	0 / 0	735 / 0	0 / 0
J	2329	1446 / 0	0 / 0	0 / 0	0 / 0	884 / 0	0 / 0

BEARING MATERIAL TO BE SPF NO.2 OR BETTER AT JOINT(S) R, J

BRACING

TOP CHORD TO BE SHEATHED OR MAX. PURLIN SPACING = 2.37 FT.
MAX. UNBRACED BOTTOM CHORD LENGTH = 10.00 FT OR RIGID CEILING DIRECTLY APPLIED.

ALL PITCH BREAKS AND PERIMETER CORNER JOINTS MUST BE LATERALLY RESTRAINED.

LOADING

TOTAL LOAD CASES: (4)

CHORDS

MEMB. FR-TO	MAX. FACTORED FORCE (LBS)	FACTORED VERT. LOAD (PLF) FROM	TO	LC1 MAX CSI (LC)	MAX. UNBRAC LENGTH
A- B	-3644 / 0	-78.0	-78.0	0.73 (1)	3.58
B- C	-5284 / 0	-78.0	-78.0	0.63 (1)	3.08
C- T	-6018 / 0	-78.0	-78.0	0.75 (1)	2.78
T- D	-6018 / 0	-153.5	-153.5	0.75 (1)	2.78
D- E	-6018 / 0	-153.5	-153.5	1.00 (1)	2.37
E- F	-6018 / 0	-153.5	-153.5	1.00 (1)	2.37
F- G	-5316 / 0	-153.5	-153.5	0.93 (1)	2.62
G- H	-4186 / 0	-78.0	-78.0	0.82 (1)	3.33
R- A	-2671 / 0	0.0	0.0	0.19 (1)	6.33
J- H	-3034 / 0	0.0	0.0	0.21 (1)	6.00
S- R	0 / 0	-96.5	-96.5	0.06 (1)	10.00
R- Q	0 / 0	-18.5	-18.5	0.06 (4)	10.00
Q- P	0 / 3020	-18.5	-18.5	0.44 (1)	10.00
P- U	0 / 5284	-18.5	-18.5	0.89 (1)	10.00
U- O	0 / 5284	-36.4	-36.4	0.89 (1)	10.00
O- N	0 / 5284	-36.4	-36.4	0.89 (1)	10.00
N- M	0 / 5316	-36.4	-36.4	0.56 (1)	10.00
M- L	0 / 5316	-36.4	-36.4	0.56 (1)	10.00
L- K	0 / 3474	-36.4	-36.4	0.34 (1)	10.00
K- J	0 / 0	-36.4	-36.4	0.10 (4)	10.00
J- I	0 / 0	-96.5	-96.5	0.06 (1)	10.00

WEBS

MEMB. FR-TO	MAX. FACTORED FORCE (LBS)	MAX CSI (LC)
Q- B	-398 / 0	0.15 (1)
B- P	0 / 3034	0.75 (1)
P- C	-1190 / 0	0.45 (1)
C- N	0 / 994	0.25 (1)
N- D	-750 / 0	0.28 (1)
N- F	0 / 951	0.24 (1)
L- F	-1547 / 0	0.58 (1)
L- G	0 / 2469	0.61 (1)
K- G	-221 / 92	0.08 (1)
A- Q	0 / 3057	0.54 (1)
K- H	0 / 3511	0.62 (1)

FACTORED CONCENTRATED LOADS (LBS)

JT	LOC.	LC1	MAX-	MAX+	FACE	DIR.	TYPE
G	26-11-8	-334	-334	---	FRONT	VERT	TOTAL
U	13-2-8	-953	-953	---	FRONT	VERT	TOTAL

DESIGN CRITERIA

*** SPECIAL LOADS ANALYSIS ***
GEOMETRY AND/OR BASIC LOADS CHANGED BY USER.
LOADS WERE DERIVED FROM USER INPUT
NO FURTHER MODIFICATIONS WERE MADE

SPECIFIED LOADS:

TOP	CH.	LL	=	21.0	PSF
		DL	=	6.0	PSF
BOT	CH.	LL	=	0.0	PSF
		DL	=	7.4	PSF
TOTAL	LOAD		=	34.4	PSF

SPACING = 24.0 IN. C/C

LOADING IN FLAT SECTION BASED ON A SLOPE OF 2.00/12 MINIMUM

GIRDER TYPE: CPrimeHip
SIDE SETBACK = 5-10-8
END SETBACK = 5-10-8
END WALL WIDTH = 0-0
CORNER FRAMING TYPE: CONVENTIONAL
END JACK TYPE: CONVENTIONAL
APPLIED TO FRONT SIDE
- ADDT'L LOADS BASED ON 55 % OF GSL.
LOADS APPLIED TO FIRST 19-9-0 OF SPAN MEASURED FROM THE RIGHT.

*** NON STANDARD GIRDER ***
ADDT'L USER-DEFINED LOADS APPLIED TO ALL LOAD CASES.

THIS TRUSS IS DESIGNED FOR RESIDENTIAL OR SMALL BUILDING REQUIREMENTS OF PART 9, NBCC 2010, NBCC 2015

THIS DESIGN COMPLIES WITH:
- PART 9 OF OBC 2012, OBC 2018
- CSA 086-09, CSA 086-14
- TPIC 2011, TPIC 2014

(55 % OF 23.0 P.S.F. G.S.L. PLUS 8.4 P.S.F. RAIN LOAD) EQUALS 21.0 P.S.F. SPECIFIED ROOF LIVE LOAD

ALLOWABLE DEFL.(LL)= L/360 (1.09")
CALCULATED VERT. DEFL.(LL) = L/ 999 (0.29")
ALLOWABLE DEFL.(TL)= L/360 (1.09")
CALCULATED VERT. DEFL.(TL) = L/ 740 (0.53")

CANTILEVER DEFLECTION:
ALLOWABLE DEFL.(LL)= L/120 (0.19")
CALCULATED VERT. DEFL.(LL) = L/ 999 (0.00")
ALLOWABLE DEFL.(TL)= L/120 (0.19")
CALCULATED VERT. DEFL.(TL) = L/ 999 (0.00")

CSI: TC=1.00/1.00 (D-F:1) , BC=0.89/1.00 (N-P:1) , WB=0.75/1.00 (B-P:1) , SSI=0.47/1.00 (N-P:1)

DOL LUMBER=1.00 NAIL=1.00 LS BEND=1.00 COMP=1.00 SHEAR=1.00 TENS= 1.00

COMPANION LIVE LOAD FACTOR = 1.00

AUTOSOLVE HEELS OFF

A-18023522

CONTINUED ON PAGE 2

JOB NAME	TRUSS NAME	QUANTITY	PLY	JOB DESC.	DRWG NO.
292597	H2	1	1	TRUSS DESC.	

Alpa Roof Truss, Maple

Version 8.200 S Jan 6 2018 MiTek Industries, Inc. Sat Feb 17 14:24:20 2018 Page 1

ID:MF8iiriaTok7DlbpT4B71Xys4PG-hHj_j0CCL8Jy8Yvt67ssIolTlrzdS0qdWRzXb7zkDWP

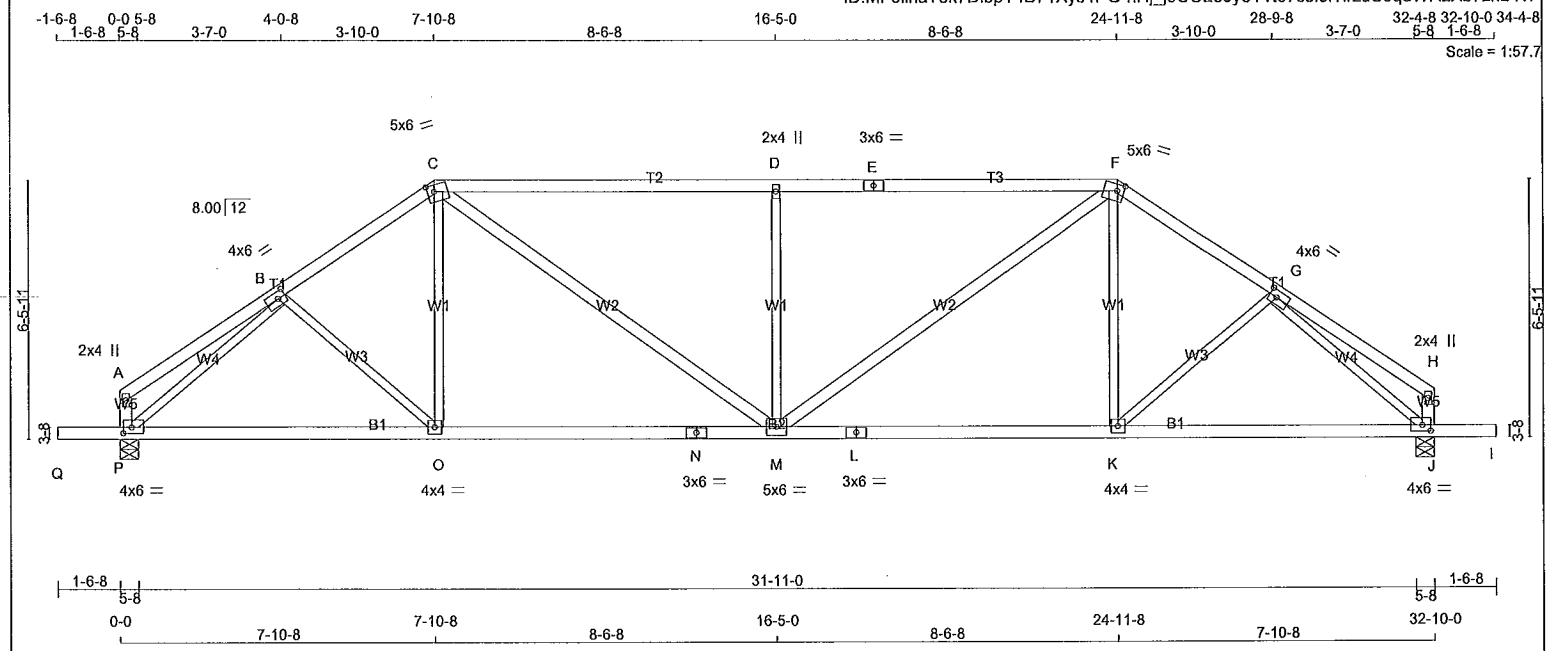

TOTAL WEIGHT = 138 lb

[M][F]

LUMBER

N. L. G. A. RULES

CHORDS	SIZE		LUMBER	DESCR.
A - C	2x4	DRY	No.2	SPF
C - E	2x4	DRY	No.2	SPF
E - F	2x4	DRY	No.2	SPF
F - H	2x4	DRY	No.2	SPF
P - A	2x4	DRY	No.2	SPF
J - H	2x4	DRY	No.2	SPF
Q - N	2x4	DRY	No.2	SPF
N - L	2x4	DRY	No.2	SPF
L - I	2x4	DRY	No.2	SPF
ALL WEBS	2x3	DRY	No.2	SPF
EXCEPT				
C - M	2x4	DRY	No.2	SPF
M - F	2x4	DRY	No.2	SPF

DRY: SEASONED LUMBER.

PLATES (table is in inches)

JT	TYPE	PLATES	W	LEN	Y	X
A	TMV+p	MT20	2.0	4.0		
B	TMWW-t	MT20	4.0	6.0	2.00	2.25
C	TTWW-m	MT20	5.0	6.0	2.00	2.00
D	TMW+w	MT20	2.0	4.0		
E	TS-t	MT20	3.0	6.0		
F	TTWW-m	MT20	5.0	6.0	2.00	2.00
G	TMWW-t	MT20	4.0	6.0	2.00	2.25
H	TMV+p	MT20	2.0	4.0		
J	BMVW1-t	MT20	4.0	6.0	1.75	2.50
K	BMWW-t	MT20	4.0	4.0		
L	BS-t	MT20	3.0	6.0		
M	BMWWW-t	MT20	5.0	6.0		
N	BS-t	MT20	3.0	6.0		
O	BMWW-t	MT20	4.0	4.0		
P	BMVW1-t	MT20	4.0	6.0	1.75	2.50

NOTE: Lateral brace(s) shown shall be 1x4 for Part 9 design as per OBC 9.23.13.11, and no less than 2x4 for Part 4 design

REGISTERED PROFESSIONAL ENGINEER
02/17/2018
EDWIN C. FOK
PROVINCE OF ONTARIO

DIMENSIONS, SUPPORTS AND LOADINGS SPECIFIED BY FABRICATOR TO BE VERIFIED BY BUILDING DESIGNER

BEARINGS

JT	FACTORED GROSS REACTION VERT	HORZ	MAXIMUM FACTORED GROSS REACTION DOWN	HORZ	UPLIFT	INPUT BRG IN-SX	REQRD BRG IN-SX
P	1732	0	1732	0	0	5-8	1-13
J	1732	0	1732	0	0	5-8	1-13

UNFACTORED REACTIONS

JT	1ST LCASE COMBINED	MAX./MIN. COMPONENT REACTIONS SNOW	LIVE	PERM.LIVE	WIND	DEAD	SOIL
P	1235	754 / 0	0 / 0	0 / 0	0 / 0	481 / 0	0 / 0
J	1235	754 / 0	0 / 0	0 / 0	0 / 0	481 / 0	0 / 0

BEARING MATERIAL TO BE SPF NO.2 OR BETTER AT JOINT(S) P, J

BRACING

TOP CHORD TO BE SHEATHED OR MAX. PURLIN SPACING = 3.26 FT.
MAX. UNBRACED BOTTOM CHORD LENGTH = 10.00 FT OR RIGID CEILING DIRECTLY APPLIED.

ALL PITCH BREAKS AND PERIMETER CORNER JOINTS MUST BE LATERALLY RESTRAINED.

LOADING

TOTAL LOAD CASES: (4)

CHORDS MEMB. FR-TO	MAX. FACTORED FORCE (LBS)	FACTORED VERT. LOAD (PLF) FROM	TO	LC1 MAX CSI (LC)	MAX. UNBRAC LENGTH	WEBS MEMB. FR-TO	MAX. FACTORED FORCE (LBS)	MAX CSI (LC)
A- B	0 / 18	-78.0	-78.0	0.17 (1)	10.00	B- O	-15 / 47	0.02 (4)
B- C	-1890 / 0	-78.0	-78.0	0.18 (1)	4.74	O- C	0 / 181	0.06 (4)
C- D	-2229 / 0	-78.0	-78.0	0.94 (1)	3.26	C- M	0 / 828	0.13 (1)
D- E	-2230 / 0	-78.0	-78.0	0.94 (1)	3.26	M- D	-821 / 0	0.56 (1)
E- F	-2230 / 0	-78.0	-78.0	0.94 (1)	3.26	M- F	0 / 828	0.13 (1)
F- G	-1890 / 0	-78.0	-78.0	0.18 (1)	4.74	K- F	0 / 181	0.06 (4)
G- H	0 / 18	-78.0	-78.0	0.17 (1)	10.00	K- G	-15 / 47	0.02 (4)
P- A	-121 / 0	0.0	0.0	0.01 (1)	7.81	P- B	-2104 / 0	0.95 (1)
J- H	-121 / 0	0.0	0.0	0.01 (1)	7.81	G- J	-2104 / 0	0.95 (1)
Q- P	0 / 0	-96.5	-96.5	0.16 (1)	10.00			
P- O	0 / 1567	-18.5	-18.5	0.44 (4)	10.00			
O- N	0 / 1559	-18.5	-18.5	0.45 (4)	10.00			
N- M	0 / 1559	-18.5	-18.5	0.45 (4)	10.00			
M- L	0 / 1559	-18.5	-18.5	0.45 (4)	10.00			
L- K	0 / 1559	-18.5	-18.5	0.45 (4)	10.00			
K- J	0 / 1567	-18.5	-18.5	0.44 (4)	10.00			
J- I	0 / 0	-96.5	-96.5	0.16 (1)	10.00			

DESIGN CRITERIA

SPECIFIED LOADS:

TOP CH.	LL	=	21.0	PSF
	DL	=	6.0	PSF
BOT CH.	LL	=	0.0	PSF
	DL	=	7.4	PSF
TOTAL LOAD		=	34.4	PSF

SPACING = 24.0 IN. C/C

LOADING IN FLAT SECTION BASED ON A SLOPE OF 2.00/12 MINIMUM

THIS TRUSS IS DESIGNED FOR RESIDENTIAL OR SMALL BUILDING REQUIREMENTS OF PART 9, NBCC 2010, NBCC 2015

THIS DESIGN COMPLIES WITH:
- PART 9 OF OBC 2012, OBC 2018
- CSA 086-09, CSA 086-14
- TPIC 2011, TPIC 2014

(55 % OF 23.0 P.S.F. G.S.L. PLUS 8.4 P.S.F. RAIN LOAD) EQUALS 21.0 P.S.F. SPECIFIED ROOF LIVE LOAD

ALLOWABLE DEFL.(LL)= L/360 (1.09")
CALCULATED VERT. DEFL.(LL) = L/ 999 (0.10")
ALLOWABLE DEFL.(TL)= L/360 (1.09")
CALCULATED VERT. DEFL.(TL) = L/ 999 (0.21")

CANTILEVER DEFLECTION:
ALLOWABLE DEFL.(LL)= L/120 (0.19")
CALCULATED VERT. DEFL.(LL) = L/ 999 (0.01")
ALLOWABLE DEFL.(TL)= L/120 (0.19")
CALCULATED VERT. DEFL.(TL) = L/ 999 (0.01")

CSI: TC=0.94/1.00 (C-D:1) , BC=0.45/1.00 (K-M:4) , WB=0.95/1.00 (G-J:1) , SSI=0.32/1.00 (C-D:1)

DOL LUMBER=1.00 NAIL=1.00 LS BEND=1.10 COMP=1.10 SHEAR=1.10 TENS= 1.10

COMPANION LIVE LOAD FACTOR = 1.00

TRUSS PLATE MANUFACTURER IS NOT RESPONSIBLE FOR QUALITY CONTROL IN THE TRUSS MANUFACTURING PLANT .

NAIL VALUES

PLATE	GRIP(DRY) (PSI) MAX	MIN	SHEAR (PLI) MAX	MIN	SECTION (PLI) MAX	MIN
MT20	618	354	1667	788	1987	1656

PLATE PLACEMENT TOL. = 0.250 inches

PLATE ROTATION TOL. = 5.0 Deg.

JSI GRIP= 0.87 (P) (INPUT = 0.90)
JSI METAL= 0.52 (B) (INPUT = 1.00)

A-18023523

JOB NAME	TRUSS NAME	QUANTITY	PLY	JOB DESC.	DRWG NO.
292597	H3	1	1	TRUSS DESC.	

Alpa Roof Truss, Maple

Version 8.200 S Jan 6 2018 MiTek Industries, Inc. Sat Feb 17 14:24:38 2018 Page 1

ID:MF8iirlaTok7DlbpT4B71Xys4PG-9lonVAQV6gaOJJHK9vB41bUfG55IgC0GeEKUD4zkDW7

-1-6-8 0-0 5-8 5-0-8 9-10-8 16-5-0 22-11-8 27-9-8 32-4-8 32-10-0 34-4-8

1-6-8 5-8 4-7-0 4-10-0 6-6-8 6-6-8 4-10-0 4-7-0 5-8 1-6-8

Scale = 1:57.7

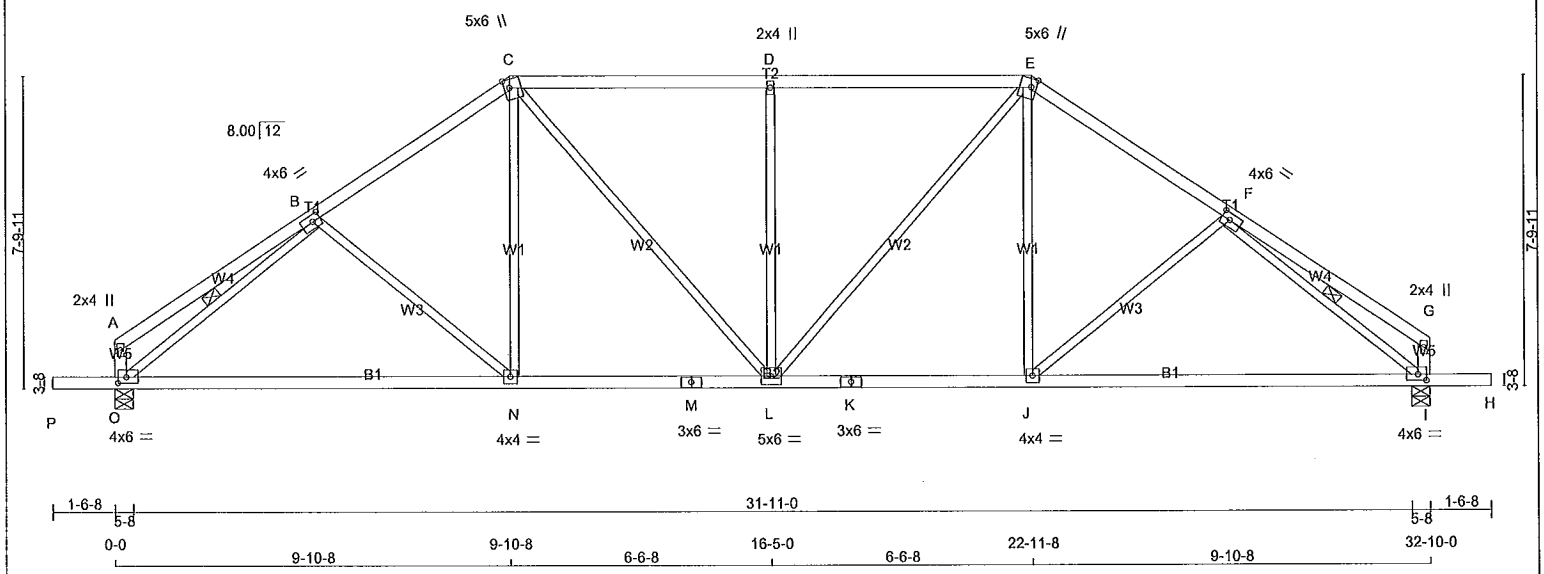

1-6-8 31-11-0 1-6-8

5-8 5-8

0-0 9-10-8 16-5-0 22-11-8 32-10-0

9-10-8 6-6-8 6-6-8 9-10-8

TOTAL WEIGHT = 139 lb

[M][F]

LUMBER

N. L. G. A. RULES

CHORDS	SIZE		LUMBER	DESCR.
A - C	2x4	DRY	No.2	SPF
C - E	2x4	DRY	No.2	SPF
E - G	2x4	DRY	No.2	SPF
O - A	2x4	DRY	No.2	SPF
I - G	2x4	DRY	No.2	SPF
P - M	2x4	DRY	No.2	SPF
M - K	2x4	DRY	No.2	SPF
K - H	2x4	DRY	No.2	SPF
ALL WEBS EXCEPT	2x3	DRY	No.2	SPF

DRY: SEASONED LUMBER.

PLATES (table is in inches)

JT	TYPE	PLATES	W	LEN	Y	X
A	TMV+p	MT20	2.0	4.0		
B	TMWW-t	MT20	4.0	6.0	2.00	2.50
C	TTWW+m	MT20	5.0	6.0	2.50	1.50
D	TMW+w	MT20	2.0	4.0		
E	TTWW+m	MT20	5.0	6.0	2.50	1.50
F	TMWW-t	MT20	4.0	6.0	2.00	2.50
G	TMV+p	MT20	2.0	4.0		
I	BMVW1-t	MT20	4.0	6.0	1.75	2.50
J	BMWW-t	MT20	4.0	4.0		
K	BS-t	MT20	3.0	6.0		
L	BMWWW-t	MT20	5.0	6.0		
M	BS-t	MT20	3.0	6.0		
N	BMWW-t	MT20	4.0	4.0		
O	BMVW1-t	MT20	4.0	6.0	1.75	2.50

NOTE: Lateral brace(s) shown shall be 1x4 for Part 9 design as per OBC 9.23.13.11, and no less than 2x4 for Part 4 design

REGISTERED PROFESSIONAL ENGINEER
02/17/2018
EDWIN C. FOK
PROVINCE OF ONTARIO

DIMENSIONS, SUPPORTS AND LOADINGS SPECIFIED BY FABRICATOR TO BE VERIFIED BY BUILDING DESIGNER

BEARINGS

JT	FACTORED GROSS REACTION VERT	HORZ	MAXIMUM FACTORED GROSS REACTION DOWN	HORZ	UPLIFT	INPUT BRG IN-SX	REQRD BRG IN-SX
O	1732	0	1732	0	0	5-8	1-13
I	1732	0	1732	0	0	5-8	1-13

UNFACTORED REACTIONS

JT	1ST LCASE COMBINED	MAX./MIN. COMPONENT REACTIONS SNOW	LIVE	PERM.LIVE	WIND	DEAD	SOIL
O	1235	754 / 0	0 / 0	0 / 0	0 / 0	481 / 0	0 / 0
I	1235	754 / 0	0 / 0	0 / 0	0 / 0	481 / 0	0 / 0

BEARING MATERIAL TO BE SPF NO.2 OR BETTER AT JOINT(S) O, I

BRACING

TOP CHORD TO BE SHEATHED OR MAX. PURLIN SPACING = 4.46 FT.
MAX. UNBRACED BOTTOM CHORD LENGTH = 10.00 FT OR RIGID CEILING DIRECTLY APPLIED.

ALL PITCH BREAKS AND PERIMETER CORNER JOINTS MUST BE LATERALLY RESTRAINED.

1 LATERAL BRACE(S) AT 1/ 2 LENGTH OF B-O, F-I.

END VERTICAL(S) MUST BE SHEATHED OR HAVE BRACES AS INDICATED IN THE MAX. UNBRACED LENGTH COLUMN OF THE TABLE BELOW

LOADING

TOTAL LOAD CASES: (4)

CHORDS

MEMB. FR-TO	MAX. FACTORED FORCE (LBS)	FACTORED VERT. LOAD LC1 (PLF) FROM	TO	MAX CSI (LC)	MAX. UNBRAC LENGTH
A- B	0 / 24	-78.0	-78.0	0.30 (1)	10.00
B- C	-1802 / 0	-78.0	-78.0	0.28 (1)	4.73
C- D	-1784 / 0	-78.0	-78.0	0.49 (1)	4.46
D- E	-1784 / 0	-78.0	-78.0	0.49 (1)	4.46
E- F	-1802 / 0	-78.0	-78.0	0.28 (1)	4.73
F- G	0 / 24	-78.0	-78.0	0.30 (1)	10.00
O- A	-148 / 0	0.0	0.0	0.02 (1)	7.81
I- G	-148 / 0	0.0	0.0	0.02 (1)	7.81
P- O	0 / 0	-96.5	-96.5	0.16 (1)	10.00
O- N	0 / 1600	-18.5	-18.5	0.55 (4)	10.00
N- M	0 / 1481	-18.5	-18.5	0.55 (4)	10.00
M- L	0 / 1481	-18.5	-18.5	0.55 (4)	10.00
L- K	0 / 1481	-18.5	-18.5	0.55 (4)	10.00
K- J	0 / 1481	-18.5	-18.5	0.55 (4)	10.00
J- I	0 / 1600	-18.5	-18.5	0.55 (4)	10.00
I- H	0 / 0	-96.5	-96.5	0.16 (1)	10.00

WEBS

MEMB. FR-TO	MAX. FACTORED FORCE (LBS)	MAX CSI (LC)
B- N	-160 / 5	0.13 (1)
N- C	0 / 296	0.07 (4)
C- L	0 / 461	0.10 (1)
L- D	-626 / 0	0.71 (1)
L- E	0 / 461	0.10 (1)
J- E	0 / 296	0.07 (4)
J- F	-160 / 5	0.13 (1)
O- B	-2100 / 0	0.60 (1)
F- I	-2100 / 0	0.60 (1)

DESIGN CRITERIA

SPECIFIED LOADS:

TOP CH.	LL	=	21.0	PSF
	DL	=	6.0	PSF
BOT CH.	LL	=	0.0	PSF
	DL	=	7.4	PSF
TOTAL LOAD		=	34.4	PSF

SPACING = 24.0 IN. C/C

LOADING IN FLAT SECTION BASED ON A SLOPE OF 2.00/12 MINIMUM

THIS TRUSS IS DESIGNED FOR RESIDENTIAL OR SMALL BUILDING REQUIREMENTS OF PART 9, NBCC 2010, NBCC 2015

THIS DESIGN COMPLIES WITH:
- PART 9 OF OBC 2012, OBC 2018
- CSA 086-09, CSA 086-14
- TPIC 2011, TPIC 2014

(55 % OF 23.0 P.S.F. G.S.L. PLUS 8.4 P.S.F. RAIN LOAD) EQUALS 21.0 P.S.F. SPECIFIED ROOF LIVE LOAD

ALLOWABLE DEFL.(LL)= L/360 (1.09")
CALCULATED VERT. DEFL.(LL) = L/ 999 (0.08")
ALLOWABLE DEFL.(TL)= L/360 (1.09")
CALCULATED VERT. DEFL.(TL) = L/ 999 (0.32")

CANTILEVER DEFLECTION:
ALLOWABLE DEFL.(LL)= L/120 (0.19")
CALCULATED VERT. DEFL.(LL) = L/ 999 (0.01")
ALLOWABLE DEFL.(TL)= L/120 (0.19")
CALCULATED VERT. DEFL.(TL) = L/ 999 (0.01")

CSI: TC=0.49/1.00 (C-D:1) , BC=0.55/1.00 (J-L:4) , WB=0.71/1.00 (D-L:1) , SSI=0.25/1.00 (C-D:1)

DOL LUMBER=1.00 NAIL=1.00 LS BEND=1.10 COMP=1.10 SHEAR=1.10 TENS= 1.10

COMPANION LIVE LOAD FACTOR = 1.00

TRUSS PLATE MANUFACTURER IS NOT RESPONSIBLE FOR QUALITY CONTROL IN THE TRUSS MANUFACTURING PLANT .

NAIL VALUES

PLATE	GRIP(DRY) (PSI) MAX	MIN	SHEAR (PLI) MAX	MIN	SECTION (PLI) MAX	MIN
MT20	618	354	1667	788	1987	1656

PLATE PLACEMENT TOL. = 0.250 inches

PLATE ROTATION TOL. = 5.0 Deg.

JSI GRIP= 0.88 (F) (INPUT = 0.90)
JSI METAL= 0.51 (F) (INPUT = 1.00)

A-18023524

JOB NAME	TRUSS NAME	QUANTITY	PLY	JOB DESC.	DRWG NO.
292597	H4	6	1	TRUSS DESC.	

Alpa Roof Truss, Maple

Version 8.200 S Jan 6 2018 MiTek Industries, Inc. Sat Feb 17 14:25:10 2018 Page 1

ID:MF8iiriaTok7DlbpT4B71Xys4PG-EvkuD6pZaVcs8EkU1dmbKLp7k?20Al__?D4BLDzkDVd

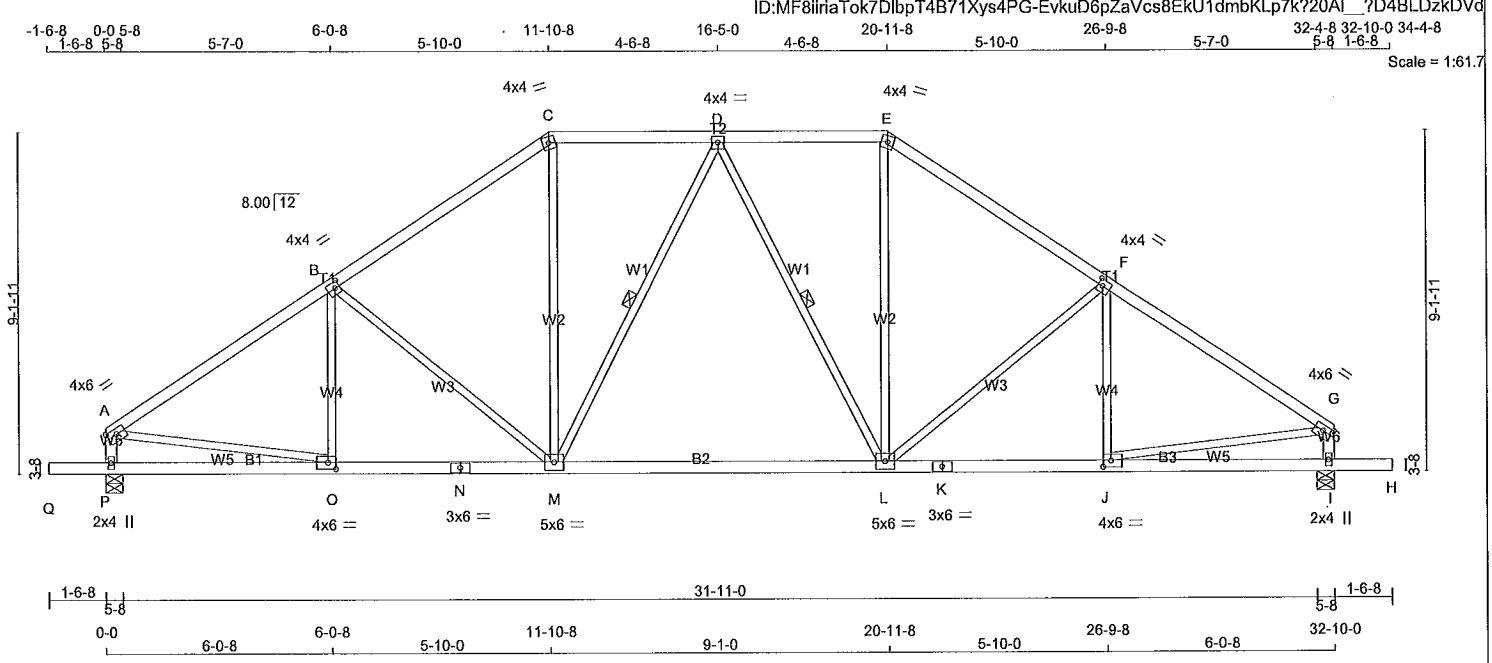

TOTAL WEIGHT = 6 X 145 = 868 lb

[M][F]

LUMBER

N. L. G. A. RULES

CHORDS	SIZE		LUMBER	DESCR.
A - C	2x4	DRY	No.2	SPF
C - E	2x4	DRY	No.2	SPF
E - G	2x4	DRY	No.2	SPF
P - A	2x4	DRY	No.2	SPF
I - G	2x4	DRY	No.2	SPF
Q - N	2x4	DRY	No.2	SPF
N - K	2x4	DRY	No.2	SPF
K - H	2x4	DRY	No.2	SPF
ALL WEBS EXCEPT	2x3	DRY	No.2	SPF

DRY: SEASONED LUMBER.

PLATES (table is in inches)

JT	TYPE	PLATES	W	LEN	Y	X
A	TMVW-t	MT20	4.0	6.0	1.75	Edge
B	TMWW-t	MT20	4.0	4.0	2.00	1.50
C	TTW-m	MT20	4.0	4.0		
D	TMWW-t	MT20	4.0	4.0		
E	TTW-m	MT20	4.0	4.0		
F	TMWW-t	MT20	4.0	4.0	2.00	1.50
G	TMVW-t	MT20	4.0	6.0	1.75	Edge
I	BMV1+p	MT20	2.0	4.0		
J	BMWW-t	MT20	4.0	6.0	2.00	2.50
K	BS-t	MT20	3.0	6.0		
L	BMWWW-t	MT20	5.0	6.0		
M	BMWWW-t	MT20	5.0	6.0		
N	BS-t	MT20	3.0	6.0		
O	BMWW-t	MT20	4.0	6.0	2.00	2.50
P	BMV1+p	MT20	2.0	4.0		

Edge - INDICATES REFERENCE CORNER OF PLATE TOUCHES EDGE OF CHORD.

NOTE: Lateral brace(s) shown shall be 1x4 for Part 9 design as per OBC 9.23.13.11, and no less than 2x4 for Part 4 design

REGISTERED PROFESSIONAL ENGINEER
02/17/2018
EDWIN C. FOK
PROVINCE OF ONTARIO

DIMENSIONS, SUPPORTS AND LOADINGS SPECIFIED BY FABRICATOR TO BE VERIFIED BY BUILDING DESIGNER

BEARINGS

JT	FACTORED GROSS REACTION VERT	HORZ	MAXIMUM FACTORED GROSS REACTION DOWN	HORZ	UPLIFT	INPUT BRG IN-SX	REQRD BRG IN-SX
P	1766	0	1766	0	0	5-8	2-10
I	1766	0	1766	0	0	5-8	2-10

UNFACTORED REACTIONS

JT	1ST LCASE COMBINED	MAX./MIN. COMPONENT REACTIONS SNOW	LIVE	PERM.LIVE	WIND	DEAD	SOIL
P	1262	754 / 0	0 / 0	0 / 0	0 / 0	509 / 0	0 / 0
I	1262	754 / 0	0 / 0	0 / 0	0 / 0	509 / 0	0 / 0

BEARING MATERIAL TO BE SPF NO.2 OR BETTER AT JOINT(S) P, I

BRACING

FOR SECTION C-E, MAX. PURLIN SPACING = 2.00 FT.
FOR OTHER SECTIONS, TOP CHORD TO BE SHEATHED OR MAX. PURLIN SPACING = 4.34 FT.
MAX. UNBRACED BOTTOM CHORD LENGTH = 10.00 FT OR RIGID CEILING DIRECTLY APPLIED.

ALL PITCH BREAKS AND PERIMETER CORNER JOINTS MUST BE LATERALLY RESTRAINED.

1 LATERAL BRACE(S) AT 1/ 2 LENGTH OF D-M, D-L.

END VERTICAL(S) MUST BE SHEATHED OR HAVE BRACES AS INDICATED IN THE MAX. UNBRACED LENGTH COLUMN OF THE TABLE BELOW

LOADING

TOTAL LOAD CASES: (4)

CHORDS

MEMB. FR-TO	MAX. FACTORED FORCE (LBS)	FACTORED VERT. LOAD LC1 (PLF) FROM	TO	MAX CSI (LC)	MAX. UNBRAC LENGTH
A- B	-2013 / 0	-78.0	-78.0	0.45 (1)	4.34
B- C	-1731 / 0	-78.0	-78.0	0.41 (1)	4.65
C- D	-1419 / 0	-85.5	-85.5	0.24 (1)	2.00
D- E	-1419 / 0	-85.5	-85.5	0.24 (1)	2.00
E- F	-1731 / 0	-78.0	-78.0	0.41 (1)	4.65
F- G	-2013 / 0	-78.0	-78.0	0.45 (1)	4.34
P- A	-1569 / 0	0.0	0.0	0.16 (1)	6.58
I- G	-1569 / 0	0.0	0.0	0.16 (1)	6.58
Q- P	0 / 0	-96.5	-96.5	0.16 (1)	10.00
P- O	0 / 0	-18.5	-18.5	0.14 (4)	10.00
O- N	0 / 1700	-18.5	-18.5	0.41 (1)	10.00
N- M	0 / 1700	-18.5	-18.5	0.41 (1)	10.00
M- L	0 / 1537	-18.5	-18.5	0.39 (4)	10.00
L- K	0 / 1700	-18.5	-18.5	0.41 (1)	10.00
K- J	0 / 1700	-18.5	-18.5	0.41 (1)	10.00
J- I	0 / 0	-18.5	-18.5	0.14 (4)	10.00
I- H	0 / 0	-96.5	-96.5	0.16 (1)	10.00

WEBS

MEMB. FR-TO	MAX. FACTORED FORCE (LBS)	MAX CSI (LC)
B- M	-146 / 22	0.06 (1)
M- C	-374 / 0	0.45 (1)
M- D	0 / 620	0.14 (1)
D- L	-262 / 0	0.19 (1)
L- E	-262 / 0	0.19 (1)
L- F	0 / 620	0.14 (1)
J- F	-374 / 0	0.45 (1)
A- O	-146 / 22	0.06 (1)
J- G	0 / 1719	0.39 (1)
	0 / 1719	0.39 (1)

DESIGN CRITERIA

SPECIFIED LOADS:

TOP CH.	LL	=	21.0	PSF
	DL	=	6.0	PSF
BOT CH.	LL	=	0.0	PSF
	DL	=	7.4	PSF
TOTAL LOAD		=	34.4	PSF

SPACING = 24.0 IN. C/C

LOADING IN FLAT SECTION BASED ON PIGGYBACK TRUSS WITH SLOPES OF 6.00/12 AND -6.00/12 AND RESPECTIVE WALL HEIGHTS OF 0-0 AND 0-0 AND AN ADDITIONAL DEAD LOAD OF 3.0 P.S.F.

THIS TRUSS IS DESIGNED FOR RESIDENTIAL OR SMALL BUILDING REQUIREMENTS OF PART 9, NBCC 2010, NBCC 2015

THIS DESIGN COMPLIES WITH:
- PART 9 OF OBC 2012, OBC 2018
- CSA 086-09, CSA 086-14
- TPIC 2011, TPIC 2014

(55 % OF 23.0 P.S.F. G.S.L. PLUS 8.4 P.S.F. RAIN LOAD) EQUALS 21.0 P.S.F. SPECIFIED ROOF LIVE LOAD

ALLOWABLE DEFL.(LL)= L/360 (1.09")
CALCULATED VERT. DEFL.(LL) = L/ 999 (0.07")
ALLOWABLE DEFL.(TL)= L/360 (1.09")
CALCULATED VERT. DEFL.(TL) = L/ 999 (0.24")

CANTILEVER DEFLECTION:
ALLOWABLE DEFL.(LL)= L/120 (0.19")
CALCULATED VERT. DEFL.(LL) = L/ 999 (0.01")
ALLOWABLE DEFL.(TL)= L/120 (0.19")
CALCULATED VERT. DEFL.(TL) = L/ 999 (0.01")

CSI: TC=0.45/1.00 (F-G:1) , BC=0.41/1.00 (J-L:1) , WB=0.45/1.00 (F-L:1) , SSI=0.19/1.00 (F-G:1)

DOL LUMBER=1.00 NAIL=1.00 LS BEND=1.10 COMP=1.10 SHEAR=1.10 TENS= 1.10

COMPANION LIVE LOAD FACTOR = 1.00

TRUSS PLATE MANUFACTURER IS NOT RESPONSIBLE FOR QUALITY CONTROL IN THE TRUSS MANUFACTURING PLANT .

NAIL VALUES

PLATE	GRIP(DRY) (PSI) MAX	MIN	SHEAR (PLI) MAX	MIN	SECTION (PLI) MAX	MIN
MT20	618	354	1667	788	1987	1656

PLATE PLACEMENT TOL. = 0.250 Inches

PLATE ROTATION TOL. = 5.0 Deg.

JSI GRIP= 0.89 (O) (INPUT = 0.90)
JSI METAL= 0.54 (K) (INPUT = 1.00)

A-18023525

JOB NAME	TRUSS NAME	QUANTITY	PLY	JOB DESC.	DRWG NO.
292597	H5P	1	1	TRUSS DESC.	

Alpa Roof Truss, Maple

Version 8.200 S Jan 6 2018 MiTek Industries, Inc. Sat Feb 17 14:25:17 2018 Page 1

ID:MF8iiriaTok7DlbpT4B71Xys4PG-WFfXhVuywfVsUJmqybOE6pcPTpWaJ0X0cpH25JzkDVW

Scale = 1:17.5

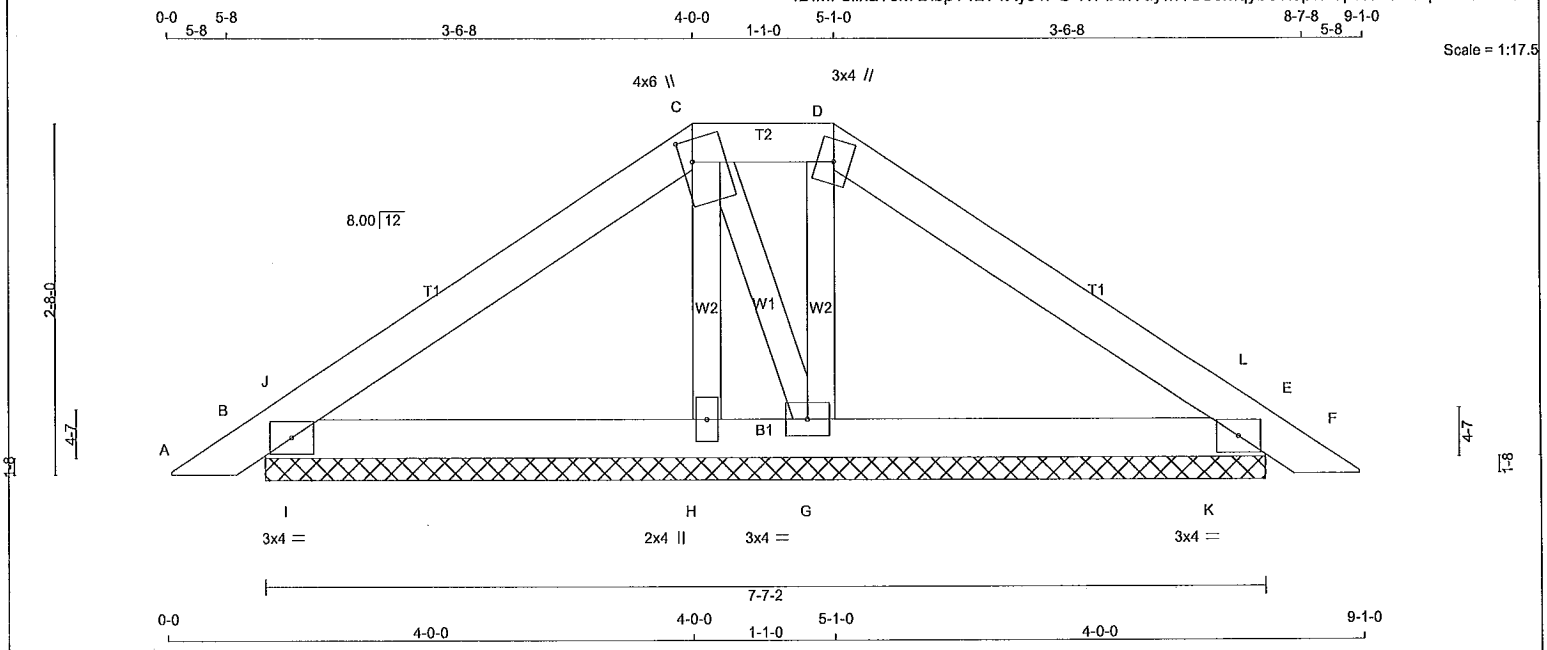

TOTAL WEIGHT = 26 lb

[M]

LUMBER

N. L. G. A. RULES

CHORDS	SIZE		LUMBER	DESCR.
A - C	2x4	DRY	No.2	SPF
C - D	2x4	DRY	No.2	SPF
D - F	2x4	DRY	No.2	SPF
B - E	2x4	DRY	No.2	SPF
ALL WEBS	2x3	DRY	No.2	SPF

DRY: SEASONED LUMBER.

PLATES (table is in inches)

JT	TYPE	PLATES	W	LEN	Y	X
B	TMB1-I	MT20	3.0	4.0		
C	TTWW+m	MT20	4.0	6.0	2.00	1.00
D	TTW+m	MT20	3.0	4.0		
E	TMB1-I	MT20	3.0	4.0		
G	BMWW1-t	MT20	3.0	4.0		
H	BMW1+w	MT20	2.0	4.0		

NOTE: Lateral brace(s) shown shall be 1x4 for Part 9 design as per OBC 9.23.13.11, and no less than 2x4 for Part 4 design

REGISTERED PROFESSIONAL ENGINEER
02/17/2018
EDWIN C. FOK
PROVINCE OF ONTARIO

DIMENSIONS, SUPPORTS AND LOADINGS SPECIFIED BY FABRICATOR TO BE VERIFIED BY BUILDING DESIGNER

BEARINGS

JT	FACTORED GROSS REACTION VERT	HORZ	MAXIMUM FACTORED GROSS REACTION DOWN	HORZ	UPLIFT	INPUT BRG IN-SX	REQRD BRG IN-SX
B	244	0	244	0	0	7-7-2	4-15
E	234	0	234	0	0	7-7-2	4-15
H	134	0	134	0	0	7-7-2	4-15
G	220	0	220	0	0	7-7-2	4-15

UNFACTORED REACTIONS

JT	1ST LCASE COMBINED	MAX./MIN. COMPONENT REACTIONS SNOW	LIVE	PERM.LIVE	WIND	DEAD	SOIL
B	172	115 / 0	0 / 0	0 / 0	0 / 0	58 / 0	0 / 0
E	166	109 / 0	0 / 0	0 / 0	0 / 0	56 / 0	0 / 0
H	97	51 / 0	0 / 0	0 / 0	0 / 0	46 / 0	0 / 0
G	157	98 / 0	0 / 0	0 / 0	0 / 0	59 / 0	0 / 0

BEARING MATERIAL TO BE SPF NO.2 OR BETTER AT JOINT(S) B, E, H, G

BRACING

TOP CHORD TO BE SHEATHED OR MAX. PURLIN SPACING = 6.25 FT.
MAX. UNBRACED BOTTOM CHORD LENGTH = 10.00 FT OR RIGID CEILING DIRECTLY APPLIED.

ALL PITCH BREAKS AND PERIMETER CORNER JOINTS MUST BE LATERALLY RESTRAINED.

LOADING

TOTAL LOAD CASES: (4)

CHORDS

MEMB. FR-TO	MAX. FACTORED FORCE (LBS)	FACTORED VERT. LOAD (PLF) FROM	TO	LC1 MAX CSI (LC)	MAX. UNBRAC LENGTH
A- B	0 / 13	-78.0	-78.0	0.02 (1)	10.00
B- J	-42 / 0	-78.0	-78.0	0.03 (1)	6.25
J- C	-88 / 0	-78.0	-78.0	0.10 (1)	6.25
C- D	-50 / 0	-78.0	-78.0	0.02 (1)	6.25
D- L	-71 / 0	-78.0	-78.0	0.10 (1)	6.25
L- E	-30 / 0	-78.0	-78.0	0.03 (1)	6.25
E- F	0 / 13	-78.0	-78.0	0.02 (1)	10.00
B- I	0 / 70	-18.5	-18.5	0.09 (1)	10.00
I- H	0 / 70	-18.5	-18.5	0.09 (1)	10.00
H- G	0 / 67	-18.5	-18.5	0.07 (1)	10.00
G- K	0 / 55	-18.5	-18.5	0.09 (1)	10.00
K- E	0 / 55	-18.5	-18.5	0.09 (1)	10.00

WEBS

MEMB. FR-TO	MAX. FACTORED FORCE (LBS)	MAX CSI (LC)
H- C	-65 / 0	0.01 (1)
C- G	-41 / 0	0.01 (1)
G- D	-112 / 0	0.02 (1)
I- J	-200 / 0	0.00 (1)
K- L	-202 / 0	0.00 (1)

DESIGN CRITERIA

SPECIFIED LOADS:

TOP CH.	LL	=	21.0	PSF
	DL	=	6.0	PSF
BOT CH.	LL	=	0.0	PSF
	DL	=	7.4	PSF
TOTAL LOAD		=	34.4	PSF

SPACING = 24.0 IN. C/C

LOADING IN FLAT SECTION BASED ON A SLOPE OF 2.00/12 MINIMUM

THIS TRUSS IS DESIGNED FOR RESIDENTIAL OR SMALL BUILDING REQUIREMENTS OF PART 9, NBCC 2010, NBCC 2015

THIS DESIGN COMPLIES WITH:
- PART 9 OF OBC 2012, OBC 2018
- CSA 086-09, CSA 086-14
- TPIC 2011, TPIC 2014

(55 % OF 23.0 P.S.F. G.S.L. PLUS 8.4 P.S.F. RAIN LOAD) EQUALS 21.0 P.S.F. SPECIFIED ROOF LIVE LOAD

CSI: TC=0.10/1.00 (C-J:1) , BC=0.09/1.00 (B-I:1) , WB=0.02/1.00 (D-G:1) , SSI=0.16/1.00 (E-K:1)

DOL LUMBER=1.00 NAIL=1.00 LS BEND=1.10 COMP=1.10 SHEAR=1.10 TENS= 1.10

COMPANION LIVE LOAD FACTOR = 1.00

TRUSS PLATE MANUFACTURER IS NOT RESPONSIBLE FOR QUALITY CONTROL IN THE TRUSS MANUFACTURING PLANT .

NAIL VALUES

PLATE	GRIP(DRY) (PSI) MAX	MIN	SHEAR (PLI) MAX	MIN	SECTION (PLI) MAX	MIN
MT20	618	354	1667	788	1987	1656

PLATE PLACEMENT TOL. = 0.250 Inches

PLATE ROTATION TOL. = 5.0 Deg.

JSI GRIP= 0.20 (B) (INPUT = 0.90)
JSI METAL= 0.05 (B) (INPUT = 1.00)

A-18023526

JOB NAME	TRUSS NAME	QUANTITY	PLY	JOB DESC.	DRWG NO.
292597	H6P	3	1	TRUSS DESC.	

Alpa Roof Truss, Maple

Version 8.200 S Jan 6 2018 MiTek Industries, Inc. Sat Feb 17 14:25:22 2018 Page 1

ID:MF8iiriaTok7DlbpT4B71Xys4PG-tDSQkCy5lB79a4enk8_PptJFhqC9_Hilm4_pmXzkDVR

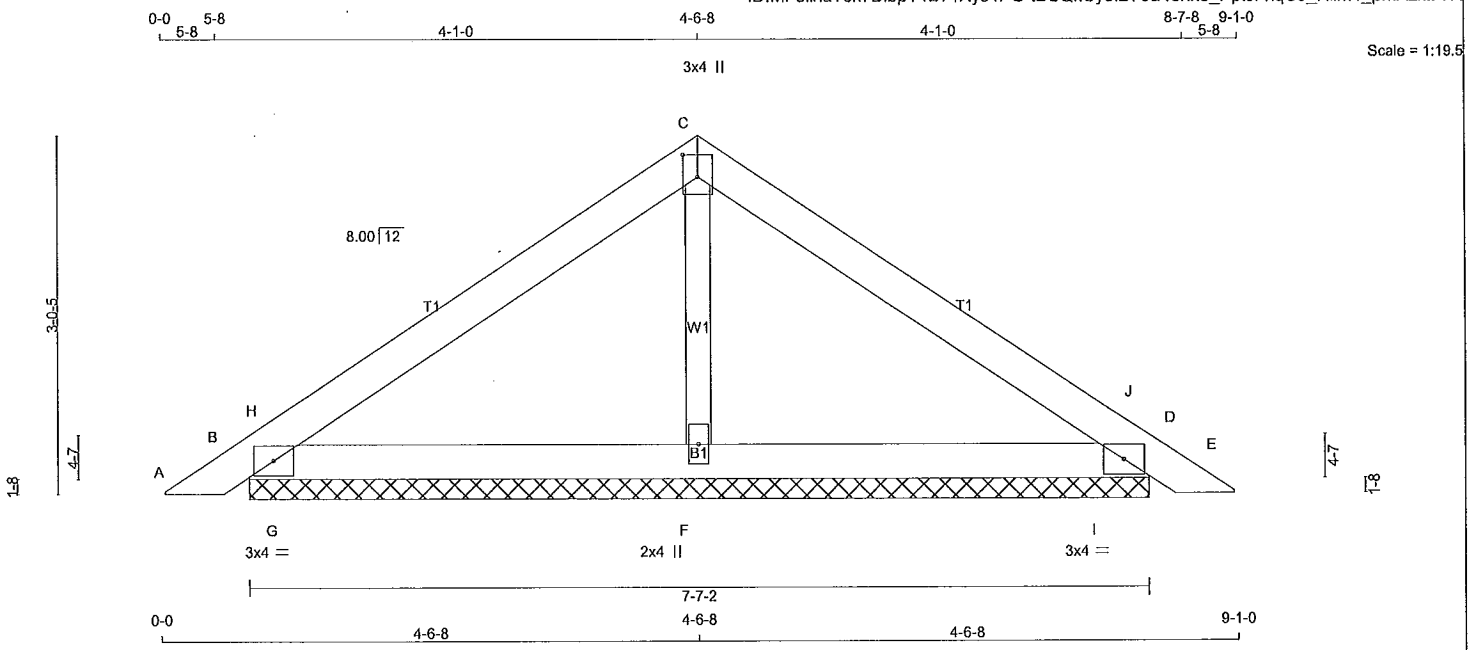

TOTAL WEIGHT = 3 X 23 = 69 lb

[M]

LUMBER

N. L. G. A. RULES

CHORDS	SIZE		LUMBER	DESCR.
A - C	2x4	DRY	No.2	SPF
C - E	2x4	DRY	No.2	SPF
B - D	2x4	DRY	No.2	SPF
ALL WEBS	2x3	DRY	No.2	SPF

DRY: SEASONED LUMBER.

PLATES (table is in inches)

JT	TYPE	PLATES	W	LEN	Y	X
B	TMB1-I	MT20	3.0	4.0		
C	TTW+p	MT20	3.0	4.0	2.25	1.50
D	TMB1-I	MT20	3.0	4.0		
F	BMW1+w	MT20	2.0	4.0		

NOTE: Lateral brace(s) shown shall be 1x4 for Part 9 design as per OBC 9.23.13.11, and no less than 2x4 for Part 4 design

REGISTERED PROFESSIONAL ENGINEER
02/17/2018
EDWIN C. FOK
PROVINCE OF ONTARIO

DIMENSIONS, SUPPORTS AND LOADINGS SPECIFIED BY FABRICATOR TO BE VERIFIED BY BUILDING DESIGNER

BEARINGS

JT	FACTORED GROSS REACTION VERT	HORZ	MAXIMUM FACTORED GROSS REACTION DOWN	HORZ	UPLIFT	INPUT BRG IN-SX	REQRD BRG IN-SX
B	274	0	274	0	0	7-7-2	9-12
D	274	0	274	0	0	7-7-2	9-12
F	284	0	284	0	0	7-7-2	9-12

UNFACTORED REACTIONS

JT	1ST LCASE COMBINED	MAX./MIN. COMPONENT REACTIONS SNOW	LIVE	PERM.LIVE	WIND	DEAD	SOIL
B	193	130 / 0	0 / 0	0 / 0	0 / 0	63 / 0	0 / 0
D	193	130 / 0	0 / 0	0 / 0	0 / 0	63 / 0	0 / 0
F	205	112 / 0	0 / 0	0 / 0	0 / 0	92 / 0	0 / 0

BEARING MATERIAL TO BE SPF NO.2 OR BETTER AT JOINT(S) B, D, F

BRACING

TOP CHORD TO BE SHEATHED OR MAX. PURLIN SPACING = 6.25 FT.
MAX. UNBRACED BOTTOM CHORD LENGTH = 10.00 FT OR RIGID CEILING DIRECTLY APPLIED.

ALL PITCH BREAKS AND PERIMETER CORNER JOINTS MUST BE LATERALLY RESTRAINED.

LOADING

TOTAL LOAD CASES: (4)

CHORDS

MEMB. FR-TO	MAX. FACTORED FORCE (LBS)	FACTORED VERT. LOAD LC1 (PLF) FROM	TO	MAX CSI (LC)	MAX. UNBRAC LENGTH
A- B	0 / 13	-78.0	-78.0	0.02 (1)	10.00
B- H	-31 / 0	-78.0	-78.0	0.06 (1)	6.25
H- C	-116 / 0	-78.0	-78.0	0.13 (1)	6.25
C- J	-116 / 0	-78.0	-78.0	0.13 (1)	6.25
J- D	-31 / 0	-78.0	-78.0	0.06 (1)	6.25
D- E	0 / 13	-78.0	-78.0	0.02 (1)	10.00
B- G	0 / 91	-18.5	-18.5	0.13 (1)	10.00
G- F	0 / 91	-18.5	-18.5	0.13 (1)	10.00
F- I	0 / 91	-18.5	-18.5	0.13 (1)	10.00
I- D	0 / 91	-18.5	-18.5	0.13 (1)	10.00

WEBS

MEMB. FR-TO	MAX. FACTORED FORCE (LBS)	MAX CSI (LC)
F- C	-126 / 0	0.02 (1)
G- H	-293 / 0	0.00 (1)
I- J	-293 / 0	0.00 (1)

DESIGN CRITERIA

SPECIFIED LOADS:

TOP CH.	LL	=	21.0	PSF
	DL	=	6.0	PSF
BOT CH.	LL	=	0.0	PSF
	DL	=	7.4	PSF
TOTAL LOAD		=	34.4	PSF

SPACING = 24.0 IN. C/C

THIS TRUSS IS DESIGNED FOR RESIDENTIAL OR SMALL BUILDING REQUIREMENTS OF PART 9, NBCC 2010, NBCC 2015

THIS DESIGN COMPLIES WITH:
- PART 9 OF OBC 2012, OBC 2018
- CSA 086-09, CSA 086-14
- TPIC 2011, TPIC 2014

(55 % OF 23.0 P.S.F. G.S.L. PLUS 8.4 P.S.F. RAIN LOAD) EQUALS 21.0 P.S.F. SPECIFIED ROOF LIVE LOAD

CSI: TC=0.13/1.00 (C-J:1) , BC=0.13/1.00 (F-I:1) , WB=0.02/1.00 (C-F:1) , SSI=0.22/1.00 (B-G:1)

DOL LUMBER=1.00 NAIL=1.00 LS BEND=1.10 COMP=1.10 SHEAR=1.10 TENS= 1.10

COMPANION LIVE LOAD FACTOR = 1.00

TRUSS PLATE MANUFACTURER IS NOT RESPONSIBLE FOR QUALITY CONTROL IN THE TRUSS MANUFACTURING PLANT .

NAIL VALUES

PLATE	GRIP(DRY) (PSI) MAX	MIN	SHEAR (PLI) MAX	MIN	SECTION (PLI) MAX	MIN
MT20	618	354	1667	788	1987	1656

PLATE PLACEMENT TOL. = 0.250 inches

PLATE ROTATION TOL. = 5.0 Deg.

JSI GRIP= 0.23 (B) (INPUT = 0.90)
JSI METAL= 0.06 (D) (INPUT = 1.00)

A-18023527

JOB NAME	TRUSS NAME	QUANTITY	PLY	JOB DESC.	DRWG NO.
292597	H7	1	1	TRUSS DESC.	

Alpa Roof Truss, Maple

Version 8.200 S Jan 6 2018 MiTek Industries, Inc. Sat Feb 17 14:25:55 2018 Page 1

ID:MF8liriaTok7DlbpT4B71Xys4PG-PZyufVLo_KHT28g7Aa38eqAnv8POD88cMjU3Q6zkDUw

Scale: 3/8"=1'

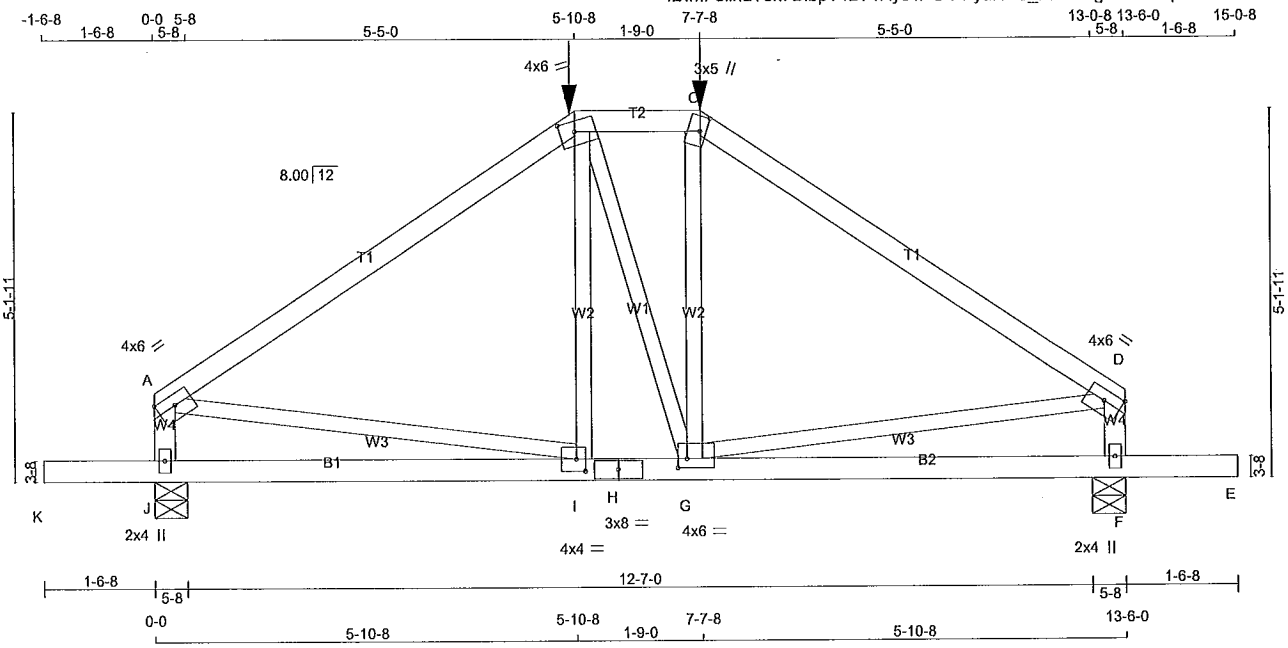

TOTAL WEIGHT = 60 lb

[M]

LUMBER

N. L. G. A. RULES

CHORDS	SIZE		LUMBER	DESCR.
A - B	2x4	DRY	No.2	SPF
B - C	2x4	DRY	No.2	SPF
C - D	2x4	DRY	No.2	SPF
J - A	2x4	DRY	No.2	SPF
F - D	2x4	DRY	No.2	SPF
K - H	2x4	DRY	No.2	SPF
H - E	2x4	DRY	No.2	SPF
ALL WEBS EXCEPT	2x3	DRY	No.2	SPF

DRY: SEASONED LUMBER.

PLATES (table is in inches)

JT	TYPE	PLATES	W	LEN	Y	X
A	TMVW-t	MT20	4.0	6.0	1.75	Edge
B	TTWW-m	MT20	4.0	6.0	1.75	2.50
C	TTW+m	MT20	3.0	5.0	2.50	1.00
D	TMVW-t	MT20	4.0	6.0	1.75	Edge
F	BMV1+p	MT20	2.0	4.0		
G	BMWWW-t	MT20	4.0	6.0	1.50	1.50
H	BS-t	MT20	3.0	8.0		
I	BMWW-t	MT20	4.0	4.0	2.00	1.50
J	BMV1+p	MT20	2.0	4.0		

Edge - INDICATES REFERENCE CORNER OF PLATE TOUCHES EDGE OF CHORD.

HANGERS NOTES

1) SPECIAL HANGER(S) OR CONNECTION(S) REQUIRED TO SUPPORT CONCENTRATED LOAD(S) 334.0 lbs FACTORED DOWN AT 7-7-8, AND 334.0 lbs FACTORED DOWN AT 5-10-8 ON TOP CHORD. DESIGN FOR UNSPECIFIED CONNECTION(S) IS DELEGATED TO THE BUILDING DESIGNER.

NOTE: Lateral brace(s) shown shall be 1x4 for Part 9 design as per OBC 9.23.13.11, and no less than 2x4 for Part 4 design

REGISTERED PROFESSIONAL ENGINEER
02/17/2018
EDWIN C. FOK
PROVINCE OF ONTARIO

DIMENSIONS, SUPPORTS AND LOADINGS SPECIFIED BY FABRICATOR TO BE VERIFIED BY BUILDING DESIGNER

BEARINGS

JT	FACTORED GROSS REACTION VERT	HORZ	MAXIMUM FACTORED GROSS REACTION DOWN	HORZ	UPLIFT	INPUT BRG	REQRD BRG
J	1321	0	1321	0	0	5-8	IN-SX
F	1321	0	1321	0	0	5-8	IN-SX
						IN-SX	1-15
						5-8	1-15

UNFACTORED REACTIONS

JT	1ST LCASE COMBINED	MAX./MIN. COMPONENT REACTIONS SNOW	LIVE	PERM.LIVE	WIND	DEAD	SOIL
J	944	563 / 0	0 / 0	0 / 0	0 / 0	381 / 0	0 / 0
F	944	563 / 0	0 / 0	0 / 0	0 / 0	381 / 0	0 / 0

BEARING MATERIAL TO BE SPF NO.2 OR BETTER AT JOINT(S) J, F

BRACING

TOP CHORD TO BE SHEATHED OR MAX. PURLIN SPACING = 4.88 FT.
MAX. UNBRACED BOTTOM CHORD LENGTH = 10.00 FT OR RIGID CEILING DIRECTLY APPLIED.

ALL PITCH BREAKS AND PERIMETER CORNER JOINTS MUST BE LATERALLY RESTRAINED.

LOADING

TOTAL LOAD CASES: (4)

CHORDS

MEMB. FR-TO	MAX. FACTORED FORCE (LBS)	FACTORED VERT. LOAD (PLF) FROM	TO	LC1 MAX CSI (LC)	MAX. UNBRAC LENGTH
A- B	-1251 / 0	-78.0	-78.0	0.61 (1)	4.88
B- C	-1040 / 0	-153.5	-153.5	0.10 (1)	6.02
C- D	-1252 / 0	-78.0	-78.0	0.61 (1)	4.88
J- A	-1082 / 0	0.0	0.0	0.12 (1)	7.56
F- D	-1081 / 0	0.0	0.0	0.12 (1)	7.56
K- J	0 / 0	-96.5	-96.5	0.17 (1)	10.00
J- I	0 / 0	-36.4	-36.4	0.30 (4)	10.00
I- H	0 / 1039	-36.4	-36.4	0.42 (4)	10.00
H- G	0 / 1039	-36.4	-36.4	0.42 (4)	10.00
G- F	0 / 0	-36.4	-36.4	0.31 (4)	10.00
F- E	0 / 0	-96.5	-96.5	0.17 (1)	10.00

WEBS

MEMB. FR-TO	MAX. FACTORED FORCE (LBS)	MAX CSI (LC)
I- B	-5 / 110	0.04 (4)
B- G	0 / 6	0.00 (4)
G- C	-1 / 115	0.04 (4)
A- I	0 / 1051	0.26 (1)
G- D	0 / 1052	0.26 (1)

FACTORED CONCENTRATED LOADS (LBS)

JT	LOC.	LC1	MAX-	MAX+	FACE	DIR.	TYPE
B	5-10-8	-334	-334	—	FRONT	VERT	TOTAL
C	7-7-8	-334	-334	—	FRONT	VERT	TOTAL

DESIGN CRITERIA

SPECIFIED LOADS:

TOP CH.	LL	=	21.0	PSF
	DL	=	6.0	PSF
BOT CH.	LL	=	0.0	PSF
	DL	=	7.4	PSF
TOTAL LOAD		=	34.4	PSF

SPACING = 24.0 IN. C/C

LOADING IN FLAT SECTION BASED ON A SLOPE OF 2.00/12 MINIMUM

GIRDER TYPE: CPrimeHip
SIDE SETBACK = 5-10-8
END SETBACK = 5-10-8
END WALL WIDTH = 0-0
CORNER FRAMING TYPE: CONVENTIONAL
END JACK TYPE: CONVENTIONAL
APPLIED TO FRONT SIDE
- ADDT'L LOADS BASED ON 55 % OF GSL.

THIS TRUSS IS DESIGNED FOR RESIDENTIAL OR SMALL BUILDING REQUIREMENTS OF PART 9, NBCC 2010, NBCC 2015

THIS DESIGN COMPLIES WITH:
- PART 9 OF OBC 2012, OBC 2018
- CSA 086-09, CSA 086-14
- TPIC 2011, TPIC 2014

(55 % OF 23.0 P.S.F. G.S.L. PLUS 8.4 P.S.F. RAIN LOAD) EQUALS 21.0 P.S.F. SPECIFIED ROOF LIVE LOAD

ALLOWABLE DEFL.(LL)= L/360 (0.45")
CALCULATED VERT. DEFL.(LL) = L/ 999 (0.02")
ALLOWABLE DEFL.(TL)= L/360 (0.45")
CALCULATED VERT. DEFL.(TL) = L/ 999 (0.09")

CANTILEVER DEFLECTION:
ALLOWABLE DEFL.(LL)= L/120 (0.19")
CALCULATED VERT. DEFL.(LL) = L/ 999 (0.01")
ALLOWABLE DEFL.(TL)= L/120 (0.19")
CALCULATED VERT. DEFL.(TL) = L/ 999 (0.01")

CSI: TC=0.61/1.00 (C-D:1) , BC=0.42/1.00 (G-I:4) , WB=0.26/1.00 (D-G:1) , SSI=0.19/1.00 (F-G:4)

DOL LUMBER=1.00 NAIL=1.00 LS BEND=1.00 COMP=1.00 SHEAR=1.00 TENS= 1.00

COMPANION LIVE LOAD FACTOR = 1.00

TRUSS PLATE MANUFACTURER IS NOT RESPONSIBLE FOR QUALITY CONTROL IN THE TRUSS MANUFACTURING PLANT .

NAIL VALUES

PLATE	GRIP(DRY) (PSI) MAX	MIN	SHEAR (PLI) MAX	MIN	SECTION (PLI) MAX	MIN
MT20	618	354	1667	788	1987	1656

PLATE PLACEMENT TOL. = 0.250 Inches

PLATE ROTATION TOL. = 5.0 Deg.

A-18023528

CONTINUED ON PAGE 2

JOB NAME	TRUSS NAME	QUANTITY	PLY	JOB DESC.	DRWG NO.
292597	H8	1	1	TRUSS DESC.	

Alpa Roof Truss, Maple

Version 8.200 S Jan 6 2018 MiTek Industries, Inc. Sat Feb 17 14:26:08 2018 Page 1

ID:MF8iiriaTok7DlbpT4B71Xys4PG-X3EpOxWywJwd689dRpoBgZD4SNu6m3_WLE7FNszkDUj

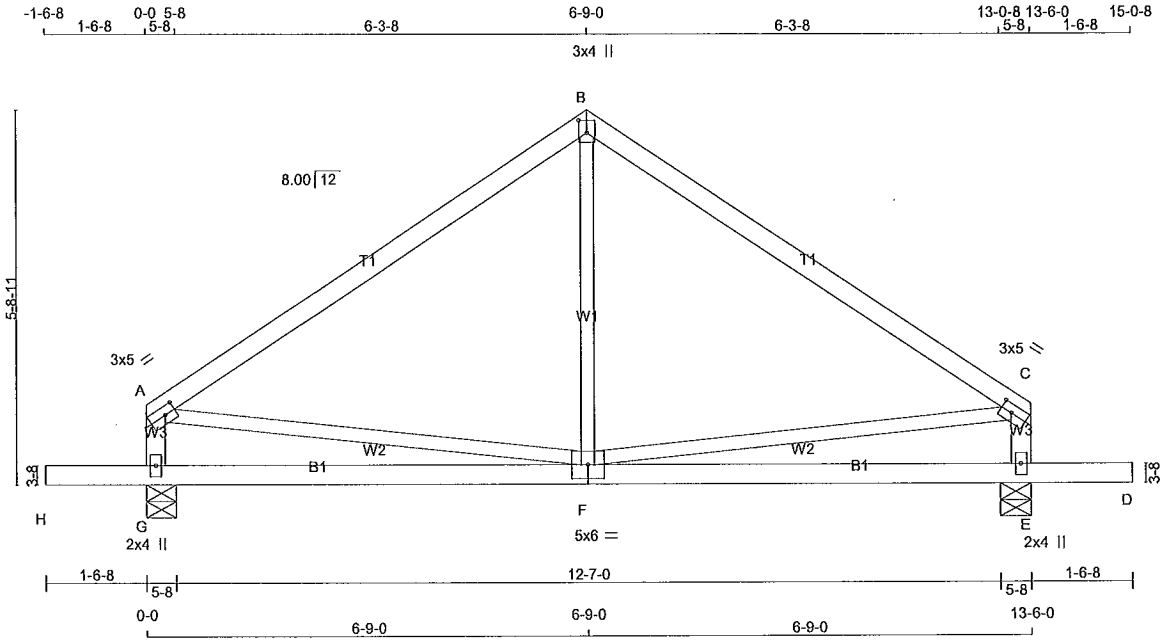

TOTAL WEIGHT = 54 lb

[M][F]

LUMBER

N. L. G. A. RULES

CHORDS	SIZE		LUMBER	DESCR.
A - B	2x4	DRY	2100F 1.8E	SPF
B - C	2x4	DRY	2100F 1.8E	SPF
G - A	2x4	DRY	No.2	SPF
E - C	2x4	DRY	No.2	SPF
H - F	2x4	DRY	No.2	SPF
F - D	2x4	DRY	No.2	SPF
ALL WEBS EXCEPT	2x3	DRY	No.2	SPF

DRY: SEASONED LUMBER.

PLATES (table is in inches)

JT	TYPE	PLATES	W	LEN	Y	X
A	TMVW-t	MT20	3.0	5.0	1.50	2.00
B	TTW+p	MT20	3.0	4.0	2.25	1.50
C	TMVW-t	MT20	3.0	5.0	1.50	2.00
E	BMV1+p	MT20	2.0	4.0		
F	BSWWW-l	MT20	5.0	6.0		
G	BMV1+p	MT20	2.0	4.0		

NOTE: Lateral brace(s) shown shall be 1x4 for Part 9 design as per OBC 9.23.13.11, and no less than 2x4 for Part 4 design

REGISTERED PROFESSIONAL ENGINEER
02/17/2018
EDWIN C. FOK
PROVINCE OF ONTARIO

DIMENSIONS, SUPPORTS AND LOADINGS SPECIFIED BY FABRICATOR TO BE VERIFIED BY BUILDING DESIGNER

BEARINGS

JT	FACTORED GROSS REACTION VERT	HORZ	MAXIMUM FACTORED GROSS REACTION DOWN	HORZ	UPLIFT	INPUT BRG IN-SX	REQRD BRG IN-SX
G	800	0	800	0	0	5-8	1-8
E	800	0	800	0	0	5-8	1-8

UNFACTORED REACTIONS

JT	1ST LCASE COMBINED	MAX./MIN. COMPONENT REACTIONS SNOW	LIVE	PERM.LIVE	WIND	DEAD	SOIL
G	570	348 / 0	0 / 0	0 / 0	0 / 0	222 / 0	0 / 0
E	570	348 / 0	0 / 0	0 / 0	0 / 0	222 / 0	0 / 0

BEARING MATERIAL TO BE SPF NO.2 OR BETTER AT JOINT(S) G, E

BRACING

TOP CHORD TO BE SHEATHED OR MAX. PURLIN SPACING = 6.25 FT.
MAX. UNBRACED BOTTOM CHORD LENGTH = 10.00 FT OR RIGID CEILING DIRECTLY APPLIED.

ALL PITCH BREAKS AND PERIMETER CORNER JOINTS MUST BE LATERALLY RESTRAINED.

LOADING

TOTAL LOAD CASES: (4)

CHORDS

MEMB. FR-TO	MAX. FACTORED FORCE (LBS)	FACTORED VERT. LOAD LC1 (PLF) FROM	TO	MAX CSI (LC)	MAX. UNBRAC LENGTH
A- B	-489 / 0	-78.0	-78.0	0.30 (1)	6.25
B- C	-489 / 0	-78.0	-78.0	0.30 (1)	6.25
G- A	-589 / 0	0.0	0.0	0.06 (1)	7.81
E- C	-589 / 0	0.0	0.0	0.06 (1)	7.81
H- G	0 / 0	-96.5	-96.5	0.16 (1)	10.00
G- F	0 / 0	-18.5	-18.5	0.25 (4)	10.00
F- E	0 / 0	-18.5	-18.5	0.25 (4)	10.00
E- D	0 / 0	-96.5	-96.5	0.16 (1)	10.00

WEBS

MEMB. FR-TO	MAX. FACTORED FORCE (LBS)	MAX CSI (LC)
F- B	0 / 98	0.03 (4)
A- F	0 / 410	0.09 (1)
F- C	0 / 410	0.09 (1)

DESIGN CRITERIA

SPECIFIED LOADS:

TOP CH.	LL	=	21.0	PSF
	DL	=	6.0	PSF
BOT CH.	LL	=	0.0	PSF
	DL	=	7.4	PSF
TOTAL LOAD		=	34.4	PSF

SPACING = 24.0 IN. C/C

THIS TRUSS IS DESIGNED FOR RESIDENTIAL OR SMALL BUILDING REQUIREMENTS OF PART 9, NBCC 2010, NBCC 2015

THIS DESIGN COMPLIES WITH:
- PART 9 OF OBC 2012, OBC 2018
- CSA 086-09, CSA 086-14
- TPIC 2011, TPIC 2014

(55 % OF 23.0 P.S.F. G.S.L. PLUS 8.4 P.S.F. RAIN LOAD) EQUALS 21.0 P.S.F. SPECIFIED ROOF LIVE LOAD

ALLOWABLE DEFL.(LL)= L/360 (0.45")
CALCULATED VERT. DEFL.(LL) = L/ 999 (0.01")
ALLOWABLE DEFL.(TL)= L/360 (0.45")
CALCULATED VERT. DEFL.(TL) = L/ 999 (0.10")

CANTILEVER DEFLECTION:
ALLOWABLE DEFL.(LL)= L/120 (0.19")
CALCULATED VERT. DEFL.(LL) = L/ 999 (0.01")
ALLOWABLE DEFL.(TL)= L/120 (0.19")
CALCULATED VERT. DEFL.(TL) = L/ 999 (0.01")

CSI: TC=0.30/1.00 (B-C:1) , BC=0.25/1.00 (E-F:4) , WB=0.09/1.00 (C-F:1) , SSI=0.17/1.00 (B-C:1)

DOL LUMBER=1.00 NAIL=1.00 LS BEND=1.10 COMP=1.10 SHEAR=1.10 TENS= 1.10

COMPANION LIVE LOAD FACTOR = 1.00

TRUSS PLATE MANUFACTURER IS NOT RESPONSIBLE FOR QUALITY CONTROL IN THE TRUSS MANUFACTURING PLANT .

NAIL VALUES

PLATE	GRIP(DRY) (PSI) MAX	MIN	SHEAR (PLI) MAX	MIN	SECTION (PLI) MAX	MIN
MT20	618	354	1667	788	1987	1656

PLATE PLACEMENT TOL. = 0.250 inches

PLATE ROTATION TOL. = 5.0 Deg.

JSI GRIP= 0.54 (A) (INPUT = 0.90)
JSI METAL= 0.19 (A) (INPUT = 1.00)

A-18023529

JOB NAME	TRUSS NAME	QUANTITY	PLY	JOB DESC.	DRWG NO.
292597	H8S	2	1	TRUSS DESC.	

Alpa Roof Truss, Maple

Version 8.200 S Jan 6 2018 MiTek Industries, Inc. Sat Feb 17 14:26:15 2018 Page 1
ID:MF8iriaTok7DlbpT4B71Xys4PG-qP9SsKbLGToeRDCzLnQqS2?E3CH2vEkYyqK77yzkDUc

Scale = 1:35.3

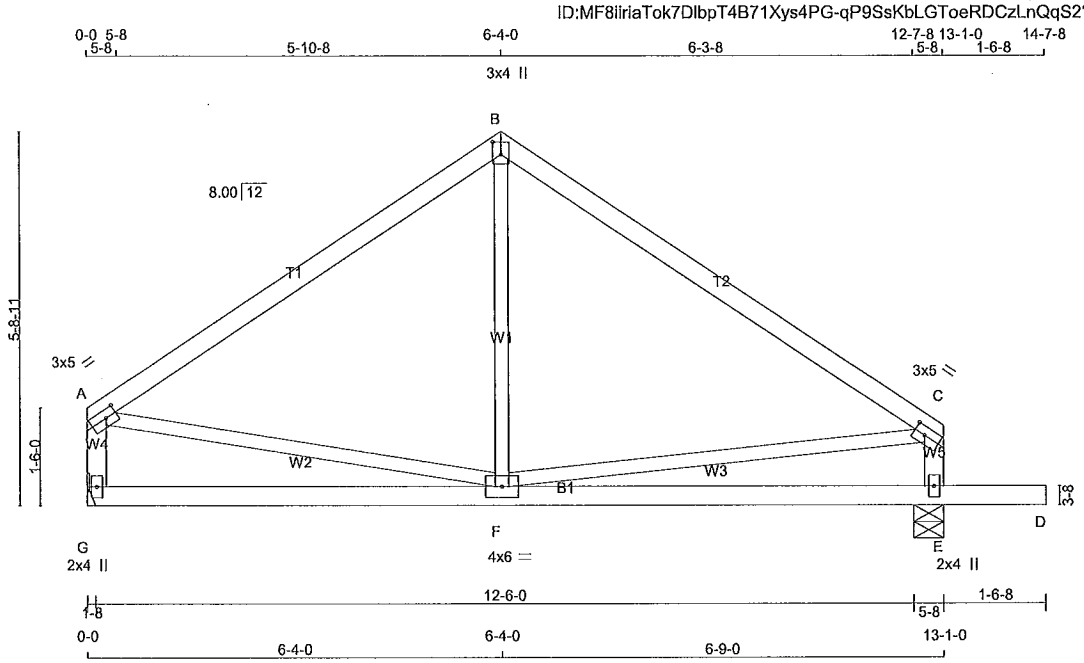

TOTAL WEIGHT = 2 X 51 = 103 lb

[M][F]

LUMBER

N. L. G. A. RULES

CHORDS	SIZE		LUMBER	DESCR.
A - B	2x4	DRY	No.2	SPF
B - C	2x4	DRY	2100F 1.8E	SPF
G - A	2x4	DRY	No.2	SPF
E - C	2x4	DRY	No.2	SPF
G - D	2x4	DRY	No.2	SPF
ALL WEBS EXCEPT	2x3	DRY	No.2	SPF

DRY: SEASONED LUMBER.

PLATES (table is in inches)

JT	TYPE	PLATES	W	LEN	Y	X
A	TMVW-t	MT20	3.0	5.0	1.50	2.00
B	TTW+p	MT20	3.0	4.0	2.25	1.50
C	TMVW-t	MT20	3.0	5.0	1.50	2.00
E	BMV1+p	MT20	2.0	4.0		
F	BMWWW-t	MT20	4.0	6.0		
G	BMV1+p	MT20	2.0	4.0		

NOTE: Lateral brace(s) shown shall be 1x4 for Part 9 design as per OBC 9.23.13.11, and no less than 2x4 for Part 4 design

REGISTERED PROFESSIONAL ENGINEER
02/17/2018
EDWIN C. FOK
PROVINCE OF ONTARIO

DIMENSIONS, SUPPORTS AND LOADINGS SPECIFIED BY FABRICATOR TO BE VERIFIED BY BUILDING DESIGNER

BEARINGS

JT	FACTORED GROSS REACTION VERT	HORZ	MAXIMUM FACTORED GROSS REACTION DOWN	HORZ	UPLIFT	INPUT BRG IN-SX	REQRD BRG IN-SX
G	631	0	631	0	0	HANGER BY OTHERS MIN. SEAT SIZE: 1-8	
E	780	0	780	0	0	5-8	1-8

UNFACTORED REACTIONS

JT	1ST LCASE COMBINED	MAX./MIN. COMPONENT REACTIONS SNOW	LIVE	PERM.LIVE	WIND	DEAD	SOIL
G	450	275 / 0	0 / 0	0 / 0	0 / 0	175 / 0	0 / 0
E	556	339 / 0	0 / 0	0 / 0	0 / 0	217 / 0	0 / 0

BEARING MATERIAL TO BE SPF NO.2 OR BETTER AT JOINT(S) E

BRACING

TOP CHORD TO BE SHEATHED OR MAX. PURLIN SPACING = 6.25 FT.
MAX. UNBRACED BOTTOM CHORD LENGTH = 10.00 FT OR RIGID CEILING DIRECTLY APPLIED.

ALL PITCH BREAKS AND PERIMETER CORNER JOINTS MUST BE LATERALLY RESTRAINED.

LOADING

TOTAL LOAD CASES: (4)

CHORDS

MEMB. FR-TO	FORCE (LBS)	FACTORED VERT. LOAD (PLF) FROM	TO	MAX CSI (LC)	MAX. UNBRAC LENGTH
A- B	-480 / 0	-78.0	-78.0	0.41 (1)	6.25
B- C	-480 / 0	-78.0	-78.0	0.30 (1)	6.25
G- A	-587 / 0	0.0	0.0	0.06 (1)	7.81
E- C	-583 / 0	0.0	0.0	0.06 (1)	7.81
G- F	0 / 0	-18.5	-18.5	0.23 (4)	10.00
F- E	0 / 0	-18.5	-18.5	0.23 (4)	10.00
E- D	0 / 0	-96.5	-96.5	0.16 (1)	10.00

WEBS

MEMB. FR-TO	FORCE (LBS)	MAX CSI (LC)
F- B	0 / 115	0.04 (4)
A- F	0 / 406	0.09 (1)
F- C	0 / 403	0.09 (1)

DESIGN CRITERIA

SPECIFIED LOADS:

TOP CH.	LL	=	21.0	PSF
	DL	=	6.0	PSF
BOT CH.	LL	=	0.0	PSF
	DL	=	7.4	PSF
TOTAL LOAD		=	34.4	PSF

SPACING = 24.0 IN. C/C

THIS TRUSS IS DESIGNED FOR RESIDENTIAL OR SMALL BUILDING REQUIREMENTS OF PART 9, NBCC 2010, NBCC 2015

THIS DESIGN COMPLIES WITH:
- PART 9 OF OBC 2012, OBC 2018
- CSA 086-09, CSA 086-14
- TPIC 2011, TPIC 2014

(55 % OF 23.0 P.S.F. G.S.L. PLUS 8.4 P.S.F. RAIN LOAD) EQUALS 21.0 P.S.F. SPECIFIED ROOF LIVE LOAD

ALLOWABLE DEFL.(LL)= L/360 (0.44")
CALCULATED VERT. DEFL.(LL) = L/ 999 (0.01")
ALLOWABLE DEFL.(TL)= L/360 (0.44")
CALCULATED VERT. DEFL.(TL) = L/ 999 (0.05")

CANTILEVER DEFLECTION:
ALLOWABLE DEFL.(LL)= L/120 (0.19")
CALCULATED VERT. DEFL.(LL) = L/ 999 (0.01")
ALLOWABLE DEFL.(TL)= L/120 (0.19")
CALCULATED VERT. DEFL.(TL) = L/ 999 (0.01")

CSI: TC=0.41/1.00 (A-B:1) , BC=0.23/1.00 (E-F:4) , WB=0.09/1.00 (A-F:1) , SSI=0.17/1.00 (B-C:1)

DOL LUMBER=1.00 NAIL=1.00 LS BEND=1.10 COMP=1.10 SHEAR=1.10 TENS= 1.10

COMPANION LIVE LOAD FACTOR = 1.00

TRUSS PLATE MANUFACTURER IS NOT RESPONSIBLE FOR QUALITY CONTROL IN THE TRUSS MANUFACTURING PLANT .

NAIL VALUES

PLATE	GRIP(DRY) (PSI) MAX	MIN	SHEAR (PLI) MAX	MIN	SECTION (PLI) MAX	MIN
MT20	618	354	1667	788	1987	1656

PLATE PLACEMENT TOL. = 0.250 inches

PLATE ROTATION TOL. = 5.0 Deg.

JSI GRIP= 0.55 (F) (INPUT = 0.90)
JSI METAL= 0.19 (C) (INPUT = 1.00)

A-18023530

JOB NAME	TRUSS NAME	QUANTITY	PLY	JOB DESC.	DRWG NO.
292597	H11	1	1	TRUSS DESC.	

Alpa Roof Truss, Maple

Version 8.200 S Jan 6 2018 MiTek Industries, Inc. Sat Feb 17 14:29:29 2018 Page 1

ID:MF8iiriaTok7DlbpT4B71Xys4PG-8kuoagx1a4F6j11FlWvKJy2PlOO5Mm75Z0KOxjzkDRa

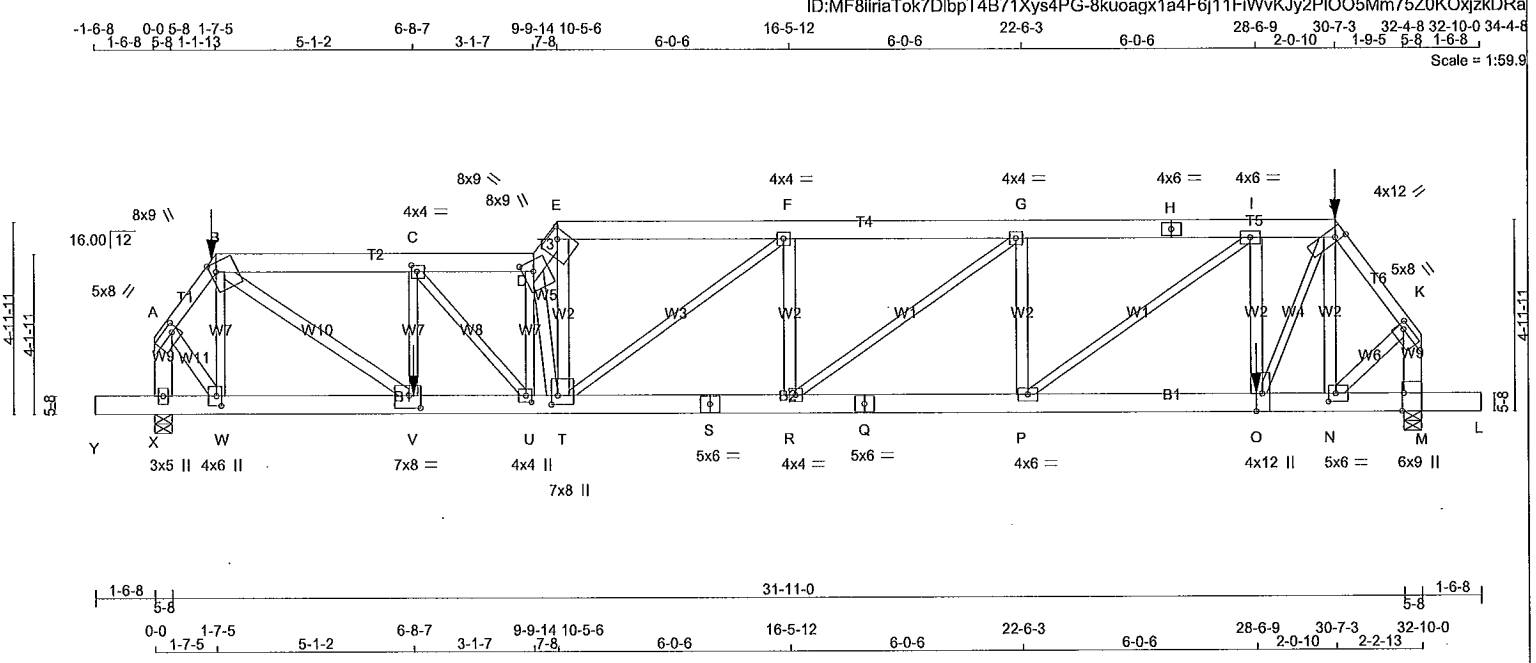

TOTAL WEIGHT = 203 lb

(M)

LUMBER

N. L. G. A. RULES

CHORDS	SIZE		LUMBER		DESCR.
A - B	2x4	DRY	No.2		SPF
B - D	2x6	DRY	No.2		SPF
D - E	2x6	DRY	No.2		SPF
E - H	2x6	DRY	No.2		SPF
H - J	2x6	DRY	No.2		SPF
J - K	2x4	DRY	No.2		SPF
X - A	2x6	DRY	No.2		SPF
M - K	2x6	DRY	No.2		SPF
Y - S	2x6	DRY	1650F	1.5E	SPF
S - Q	2x6	DRY	1650F	1.5E	SPF
Q - L	2x6	DRY	1650F	1.5E	SPF
ALL WEBS	2x3	DRY	No.2		SPF
EXCEPT					
B - V	2x4	DRY	No.2		SPF
D - T	2x4	DRY	No.2		SPF
T - E	2x4	DRY	1650F	1.5E	SPF
R - F	2x4	DRY	1650F	1.5E	SPF
P - G	2x4	DRY	1650F	1.5E	SPF
O - I	2x4	DRY	1650F	1.5E	SPF
N - J	2x4	DRY	1650F	1.5E	SPF
A - W	2x4	DRY	No.2		SPF
N - K	2x4	DRY	No.2		SPF

DRY: SEASONED LUMBER.

PLATES (table is in inches)

JT	TYPE	PLATES	W	LEN	Y	X
A	TMVW-t	MT20	5.0	8.0	2.25	2.00
B	TTWW+m	MT20	8.0	9.0	2.75	1.75
C	TMWW-t	MT20	4.0	4.0	2.00	1.75
D	TTWW+m	MT20	8.0	9.0	3.25	3.25
E	TTW+h	MT20	8.0	9.0	2.75	3.00
F	TMWW-t	MT20	4.0	4.0		
G	TMWW-t	MT20	4.0	4.0		
H	TS-t	MT20	4.0	6.0		
I	TMWW-t	MT20	4.0	6.0		
J	TTWW+h	MT20	4.0	12.0	3.25	1.25
K	TMVW-t	MT20	5.0	8.0	1.75	2.00
M	BMV1+t	MT20	6.0	9.0	Edge	0.50
N	BMWW-t	MT20	5.0	6.0	2.50	2.25

NOTE: Lateral brace(s) shown shall be 1x4 for Part 9 design as per OBC 9.23.13.11, and no less than 2x4 for Part 4 design

REGISTERED PROFESSIONAL ENGINEER
02/17/2018
EDWIN C. FOK
PROVINCE OF ONTARIO

DIMENSIONS, SUPPORTS AND LOADINGS SPECIFIED BY FABRICATOR TO BE VERIFIED BY BUILDING DESIGNER

BEARINGS

JT	FACTORED GROSS REACTION VERT	HORZ	MAXIMUM FACTORED GROSS REACTION DOWN	HORZ	UPLIFT	INPUT BRG IN-SX	REQRD BRG IN-SX
X	3323	0	3323	0	0	5-8	5-1
M	4357	0	4357	0	0	5-8	5-8

UNFACTORED REACTIONS

MAX./MIN. COMPONENT REACTIONS

JT	1ST LCASE COMBINED	SNOW	LIVE	PERM.LIVE	WIND	DEAD	SOIL
X	2347	1556 / 0	0 / 0	0 / 0	0 / 0	791 / 0	0 / 0
M	3070	2080 / 0	0 / 0	0 / 0	0 / 0	990 / 0	0 / 0

BEARING MATERIAL TO BE SPF NO.2 OR BETTER AT JOINT(S) X, M

BEARING SIZE FACTOR = 1.15 AT JNT(S) M (BASED ON SUPPORT DEPTH = 1-8)

BRACING

TOP CHORD TO BE SHEATHED OR MAX. PURLIN SPACING = 2.98 FT.

MAX. UNBRACED BOTTOM CHORD LENGTH = 10.00 FT OR RIGID CEILING DIRECTLY APPLIED.

ALL PITCH BREAKS AND PERIMETER CORNER JOINTS MUST BE LATERALLY RESTRAINED.

LOADING

TOTAL LOAD CASES: (4)

CHORDS

MEMB. FR-TO	MAX. FACTORED FORCE (LBS)	FACTORED VERT. LOAD (PLF) FROM	TO	LC1 MAX CSI (LC)	MAX. UNBRAC LENGTH
A- B	-2355 / 0	-78.0	-78.0	0.11 (1)	4.36
B- C	-4884 / 0	-81.6	-81.6	0.31 (1)	3.68
C- D	-5516 / 0	-78.0	-78.0	0.22 (1)	3.56
D- E	-7559 / 0	-78.0	-78.0	0.28 (1)	2.98
E- F	-4725 / 0	-78.0	-78.0	0.36 (1)	3.71
F- G	-5101 / 0	-78.0	-78.0	0.35 (1)	3.60
G- H	-4782 / 0	-78.0	-78.0	0.34 (1)	3.72
H- I	-4782 / 0	-78.0	-78.0	0.34 (1)	3.72
I- J	-3591 / 0	-115.7	-115.7	0.11 (1)	4.43
J- K	-3526 / 0	-78.0	-78.0	0.25 (1)	3.53
X- A	-3202 / 0	0.0	0.0	0.26 (1)	5.87
M- K	-4262 / 0	0.0	0.0	0.34 (1)	5.16
Y- X	0 / 0	-96.5	-96.5	0.06 (1)	10.00
X- W	0 / 0	-29.5	-29.5	0.10 (1)	10.00
W- V	0 / 1383	-72.1	-72.1	0.22 (1)	10.00
V- U	0 / 4884	-18.5	-18.5	0.64 (1)	10.00
U- T	0 / 5558	-18.5	-18.5	0.70 (1)	10.00
T- S	0 / 5101	-18.5	-18.5	0.45 (1)	10.00
S- R	0 / 5101	-18.5	-18.5	0.45 (1)	10.00
R- Q	0 / 4782	-18.5	-18.5	0.43 (1)	10.00
Q- P	0 / 4782	-18.5	-18.5	0.43 (1)	10.00
P- O	0 / 3591	-18.5	-18.5	0.37 (1)	10.00
O- N	0 / 2084	-122.4	-122.4	0.30 (1)	10.00
N- M	0 / 0	-45.7	-45.7	0.13 (1)	10.00
M- L	0 / 0	-96.5	-96.5	0.06 (1)	10.00

WEBS

MEMB. FR-TO	MAX. FACTORED FORCE (LBS)	MAX CSI (LC)
W- B	-961 / 0	0.23 (1)
W- V	0 / 4318	0.76 (1)
V- C	-1001 / 0	0.24 (1)
C- U	0 / 995	0.25 (1)
U- D	-1516 / 0	0.37 (1)
D- T	-4894 / 0	0.86 (1)
T- E	0 / 5764	0.74 (1)
T- F	-474 / 0	0.49 (1)
R- F	-153 / 19	0.03 (1)
R- G	0 / 398	0.10 (1)
P- G	-739 / 0	0.12 (1)
P- I	0 / 1488	0.37 (1)
O- I	-1229 / 0	0.21 (1)
O- J	0 / 3636	0.90 (1)
N- J	-867 / 0	0.14 (1)
A- W	0 / 1887	0.33 (1)
N- K	0 / 2508	0.44 (1)

FACTORED CONCENTRATED LOADS (LBS)

JT	LOC.	LC1	MAX-	MAX+	FACE	DIR.	TYPE
B	1-7-5	-60	-60	---	FRONT	VERT	TOTAL
J	30-7-3	-185	-185	---	FRONT	VERT	TOTAL
O	28-6-8	-2145	-2145	---	FRONT	VERT	TOTAL
V	6-8-8	-1180	-1180	---	FRONT	VERT	TOTAL

DESIGN CRITERIA

*** SPECIAL LOADS ANALYSIS ***
GEOMETRY AND/OR BASIC LOADS CHANGED BY USER.
LOADS WERE DERIVED FROM USER INPUT
NO FURTHER MODIFICATIONS WERE MADE

SPECIFIED LOADS:

TOP CH.	LL	=	21.0	PSF
	DL	=	6.0	PSF
BOT CH.	LL	=	0.0	PSF
	DL	=	7.4	PSF
TOTAL LOAD		=	34.4	PSF

SPACING = 24.0 IN. C/C

LOADING IN ALL FLAT SECTIONS BASED ON A SLOPE OF 2.00/12 MINIMUM

GIRDER TYPE: CPrimeHip
LEFT SETBACK = 1-7-5
RIGHT SETBACK = 2-2-13
END SETBACK = 7-10-8
END WALL WIDTH = 0-0
CORNER FRAMING TYPE: CONVENTIONAL
END JACK TYPE: PARTIAL
APPLIED TO FRONT SIDE
- ADDT'L LOADS BASED ON 55 % OF GSL.
LOADS APPLIED TO FIRST 4-4-0 OF SPAN MEASURED FROM THE RIGHT.

GIRDER TYPE: CPrimeHip
LEFT SETBACK = 1-7-5
RIGHT SETBACK = 2-2-13
END SETBACK = 4-4-8
END WALL WIDTH = 0-0
CORNER FRAMING TYPE: CONVENTIONAL
END JACK TYPE: PARTIAL
APPLIED TO FRONT SIDE
- ADDT'L LOADS BASED ON 55 % OF GSL.
LOADS APPLIED TO FIRST 6-8-6 OF SPAN MEASURED FROM THE LEFT.

*** NON STANDARD GIRDER ***
ADDT'L USER-DEFINED LOADS APPLIED TO ALL LOAD CASES.

THIS TRUSS IS DESIGNED FOR RESIDENTIAL OR SMALL BUILDING REQUIREMENTS OF PART 9, NBCC 2010, NBCC 2015

THIS DESIGN COMPLIES WITH:
- PART 9 OF OBC 2012, OBC 2018
- CSA 086-09, CSA 086-14
- TPIC 2011, TPIC 2014

DESIGN ASSUMPTIONS
-OVERHANG NOT TO BE ALTERED OR CUT OFF.

(55 % OF 23.0 P.S.F. G.S.L. PLUS 8.4 P.S.F. RAIN LOAD) EQUALS 21.0 P.S.F. SPECIFIED ROOF LIVE LOAD

ALLOWABLE DEFL.(LL)= L/360 (1.09")
CALCULATED VERT. DEFL.(LL) = L/ 999 (0.26")
ALLOWABLE DEFL.(TL)= L/360 (1.09")
CALCULATED VERT. DEFL.(TL) = L/ 812 (0.49")

A-18023531

CONTINUED ON PAGE 2

JOB NAME	TRUSS NAME	QUANTITY	PLY	JOB DESC.	DRWG NO.
292597	H11	1	1	TRUSS DESC.	

PLATES (table is in inches)

JT	TYPE	PLATES	W	LEN	Y	X
O	BMWW+t	MT20	4.0	12.0	Edge	1.75
P	BMWW-t	MT20	4.0	6.0		
Q	BS-t	MT20	5.0	6.0		
R	BMWW-t	MT20	4.0	4.0		
S	BS-t	MT20	5.0	6.0		
T	BMWWW+t	MT20	7.0	8.0	2.75	2.00
U	BMWW+t	MT20	4.0	4.0	2.00	1.75
V	BMWW-t	MT20	7.0	8.0	3.75	3.50
W	BMWW+t	MT20	4.0	6.0	3.00	1.50
X	BMV1+p	MT20	3.0	5.0		

Edge - INDICATES REFERENCE CORNER OF PLATE TOUCHES EDGE OF CHORD.

HANGERS NOTES

1) SPECIAL HANGER(S) OR CONNECTION(S) REQUIRED TO SUPPORT CONCENTRATED LOAD(S) 185.1 lbs FACTORED DOWN AT 30-7-3, AND 60.1 lbs FACTORED DOWN AT 1-7-5 ON TOP CHORD, AND 1180.4 lbs FACTORED DOWN AT 6-8-8, AND 2144.9 lbs FACTORED DOWN AT 28-6-8 ON BOTTOM CHORD. DESIGN FOR UNSPECIFIED CONNECTION(S) IS DELEGATED TO THE BUILDING DESIGNER.

NOTE: Lateral brace(s) shown shall be 1x4 for Part 9 design as per OBC 9.23.13.11, and no less than 2x4 for Part 4 design

REGISTERED PROFESSIONAL ENGINEER
02/17/2018
EDWIN C. FOK
PROVINCE OF ONTARIO

CANTILEVER DEFLECTION:
ALLOWABLE DEFL.(LL)= L/120 (0.19")
CALCULATED VERT. DEFL.(LL) = L/ 545 (0.03")
ALLOWABLE DEFL.(TL)= L/120 (0.19")
CALCULATED VERT. DEFL.(TL) = L/ 301 (0.06")

CSI: TC=0.36/1.00 (E-F:1) , BC=0.70/1.00 (T-U:1) , WB=0.90/1.00 (J-O:1) , SSI=0.41/1.00 (T-U:1)

DOL LUMBER=1.00 NAIL=1.00 LS BEND=1.00 COMP=1.00 SHEAR=1.00 TENS= 1.00

COMPANION LIVE LOAD FACTOR = 1.00

AUTOSOLVE HEELS OFF

TRUSS PLATE MANUFACTURER IS NOT RESPONSIBLE FOR QUALITY CONTROL IN THE TRUSS MANUFACTURING PLANT .

NAIL VALUES

PLATE	GRIP(DRY) (PSI)		SHEAR (PLI)		SECTION (PLI)	
	MAX	MIN	MAX	MIN	MAX	MIN
MT20	618	354	1667	788	1987	1656

PLATE PLACEMENT TOL. = 0.250 Inches

PLATE ROTATION TOL. = 5.0 Deg.

JSI GRIP= 0.90 (C) (INPUT = 0.90)
JSI METAL= 0.93 (S) (INPUT = 1.00)

A-18023531(2)

JOB NAME	TRUSS NAME	QUANTITY	PLY	JOB DESC.	DRWG NO.
292597	H12	1	1	TRUSS DESC.	

Alpa Roof Truss, Maple

Version 8.200 S Jan 6 2018 MiTek Industries, Inc. Sat Feb 17 14:29:53 2018 Page 1
ID:MF8iiriaTok7DlbpT4B71Xys4PG-RLKtctE4wSGibjst6ZLyl01SF4dE_dye4l8fnKzkDRC

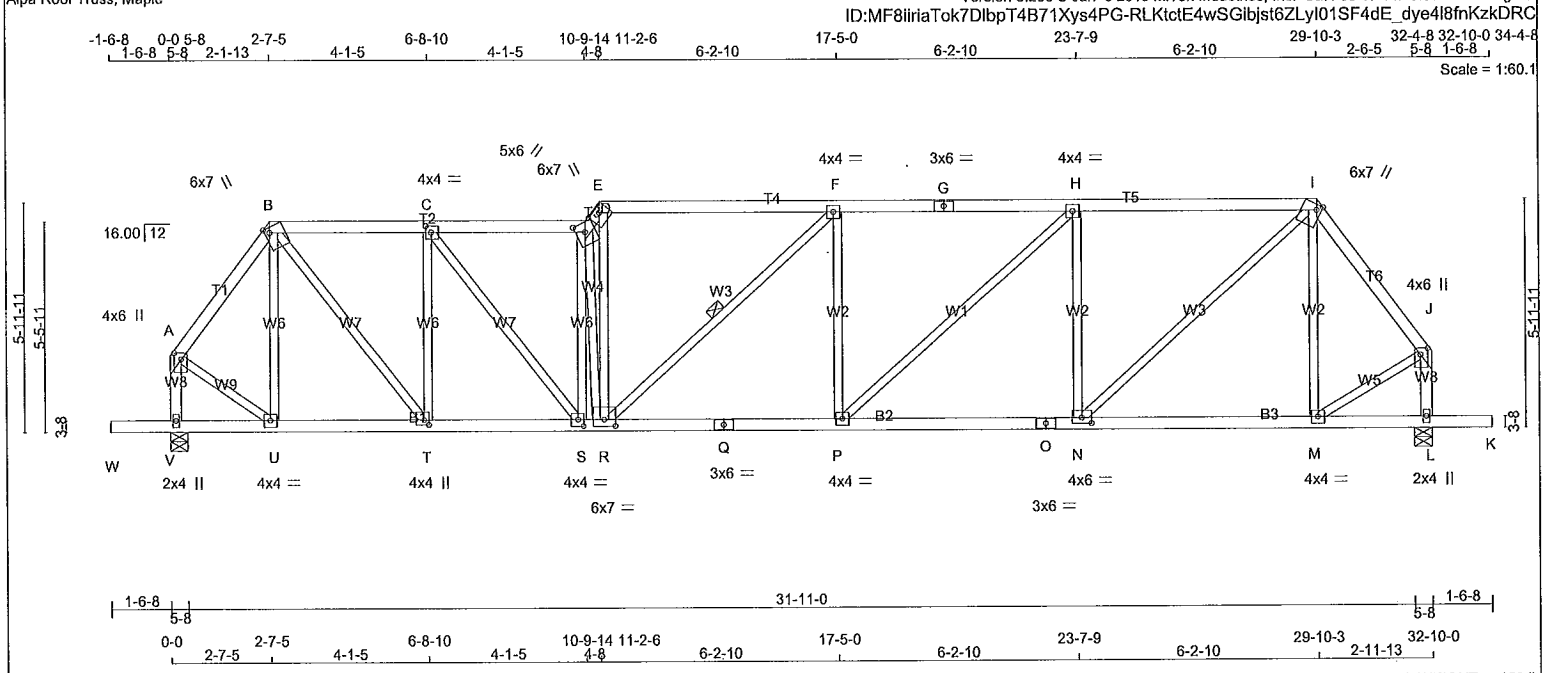

TOTAL WEIGHT = 156 lb

[M]

LUMBER

N. L. G. A. RULES

CHORDS	SIZE		LUMBER	DESCR.
A - B	2x4	DRY	No.2	SPF
B - D	2x4	DRY	No.2	SPF
D - E	2x4	DRY	No.2	SPF
E - G	2x4	DRY	No.2	SPF
G - I	2x4	DRY	No.2	SPF
I - J	2x4	DRY	No.2	SPF
V - A	2x4	DRY	No.2	SPF
L - J	2x4	DRY	No.2	SPF
W - Q	2x4	DRY	No.2	SPF
Q - O	2x4	DRY	No.2	SPF
O - K	2x4	DRY	No.2	SPF
ALL WEBS EXCEPT	2x3	DRY	No.2	SPF

DRY: SEASONED LUMBER.

PLATES (table is in inches)

JT	TYPE	PLATES	W	LEN	Y	X
A	TMVW+p	MT20	4.0	6.0	2.00	2.25
B	TTWW+m	MT20	6.0	7.0	Edge	1.50
C	TMWW-t	MT20	4.0	4.0	2.00	1.75
D	TTWW+m	MT20	6.0	7.0	3.00	2.75
E	TTW-h	MT20	5.0	6.0	1.75	3.25
F	TMWW-t	MT20	4.0	4.0		
G	TS-t	MT20	3.0	6.0		
H	TMWW-t	MT20	4.0	4.0		
I	TTWW+m	MT20	6.0	7.0	Edge	1.50
J	TMVW+p	MT20	4.0	6.0	2.00	2.25
L	BMV1+p	MT20	2.0	4.0		
M, P, U						
M	BMWW-t	MT20	4.0	4.0		
N	BMWW-t	MT20	4.0	6.0	1.75	3.00
O	BS-t	MT20	3.0	6.0		
Q	BS-t	MT20	3.0	6.0		
R	BMWWW-t	MT20	6.0	7.0	2.00	3.50
S	BMWW-t	MT20	4.0	4.0	2.00	1.75
T	BMWW+t	MT20	4.0	4.0	1.50	1.50
V	BMV1+p	MT20	2.0	4.0		

NOTE: Lateral brace(s) shown shall be 1x4 for Part 9 design as per OBC 9.23.13.11, and no less than 2x4 for Part 4 design

REGISTERED PROFESSIONAL ENGINEER
02/17/2018
EDWIN C. FOK
PROVINCE OF ONTARIO

DIMENSIONS, SUPPORTS AND LOADINGS SPECIFIED BY FABRICATOR TO BE VERIFIED BY BUILDING DESIGNER

BEARINGS

JT	FACTORED GROSS REACTION VERT	HORZ	MAXIMUM FACTORED GROSS REACTION DOWN	HORZ	UPLIFT	INPUT BRG IN-SX	REQRD BRG IN-SX
V	1732	0	1732	0	0	5-8	2-9
L	1732	0	1732	0	0	5-8	2-9

UNFACTORED REACTIONS

JT	1ST LCASE COMBINED	MAX./MIN. COMPONENT REACTIONS SNOW	LIVE	PERM.LIVE	WIND	DEAD	SOIL
V	1235	754 / 0	0 / 0	0 / 0	0 / 0	481 / 0	0 / 0
L	1235	754 / 0	0 / 0	0 / 0	0 / 0	481 / 0	0 / 0

BEARING MATERIAL TO BE SPF NO.2 OR BETTER AT JOINT(S) V, L

BRACING

TOP CHORD TO BE SHEATHED OR MAX. PURLIN SPACING = 3.74 FT.
MAX. UNBRACED BOTTOM CHORD LENGTH = 10.00 FT OR RIGID CEILING DIRECTLY APPLIED.

ALL PITCH BREAKS AND PERIMETER CORNER JOINTS MUST BE LATERALLY RESTRAINED.

1 LATERAL BRACE(S) AT 1/ 2 LENGTH OF F-R.

END VERTICAL(S) MUST BE SHEATHED OR HAVE BRACES AS INDICATED IN THE MAX. UNBRACED LENGTH COLUMN OF THE TABLE BELOW

LOADING

TOTAL LOAD CASES: (4)

CHORDS

MEMB. FR-TO	MAX. FACTORED FORCE (LBS)	FACTORED VERT. LOAD (PLF) FROM	TO	LC1 MAX CSI (LC)	MAX. UNBRAC LENGTH
A- B	-1267 / 0	-78.0	-78.0	0.11 (1)	5.60
B- C	-1670 / 0	-78.0	-78.0	0.25 (1)	4.87
C- D	-2208 / 0	-78.0	-78.0	0.28 (1)	4.32
D- E	-3410 / 0	-78.0	-78.0	0.12 (1)	3.74
E- F	-2092 / 0	-78.0	-78.0	0.54 (1)	4.14
F- G	-2337 / 0	-78.0	-78.0	0.58 (1)	3.91
G- H	-2337 / 0	-78.0	-78.0	0.58 (1)	3.91
H- I	-1907 / 0	-78.0	-78.0	0.53 (1)	4.30
I- J	-1307 / 0	-78.0	-78.0	0.15 (1)	5.50
V- A	-1566 / 0	0.0	0.0	0.18 (1)	6.58
L- J	-1571 / 0	0.0	0.0	0.18 (1)	6.58
W- V	0 / 0	-96.5	-96.5	0.16 (1)	10.00
V- U	0 / 0	-18.5	-18.5	0.05 (4)	10.00
U- T	0 / 746	-18.5	-18.5	0.18 (1)	10.00
T- S	0 / 1670	-18.5	-18.5	0.38 (1)	10.00
S- R	0 / 2228	-18.5	-18.5	0.47 (1)	10.00
R- Q	0 / 2337	-18.5	-18.5	0.47 (1)	10.00
Q- P	0 / 2337	-18.5	-18.5	0.47 (1)	10.00
P- O	0 / 1907	-18.5	-18.5	0.38 (1)	10.00
O- N	0 / 1907	-18.5	-18.5	0.38 (1)	10.00
N- M	0 / 772	-18.5	-18.5	0.22 (4)	10.00
M- L	0 / 0	-18.5	-18.5	0.11 (4)	10.00
L- K	0 / 0	-96.5	-96.5	0.16 (1)	10.00

WEBS

MEMB. FR-TO	MAX. FACTORED FORCE (LBS)	MAX CSI (LC)
U- B	-382 / 0	0.17 (1)
B- T	0 / 1480	0.33 (1)
T- C	-1046 / 0	0.47 (1)
C- S	0 / 881	0.20 (1)
S- D	-944 / 0	0.42 (1)
D- R	-1956 / 0	0.91 (1)
R- E	0 / 2501	0.56 (1)
R- F	-334 / 0	0.16 (1)
P- F	-286 / 0	0.16 (1)
P- H	0 / 582	0.13 (1)
N- H	-911 / 0	0.51 (1)
N- I	0 / 1531	0.34 (1)
M- I	-305 / 0	0.17 (1)
A- U	0 / 876	0.20 (1)
M- J	0 / 877	0.20 (1)

DESIGN CRITERIA

SPECIFIED LOADS:

TOP CH.	LL	=	21.0	PSF
	DL	=	6.0	PSF
BOT CH.	LL	=	0.0	PSF
	DL	=	7.4	PSF
TOTAL LOAD		=	34.4	PSF

SPACING = 24.0 IN. C/C

LOADING IN ALL FLAT SECTIONS BASED ON A SLOPE OF 2.00/12 MINIMUM

THIS TRUSS IS DESIGNED FOR RESIDENTIAL OR SMALL BUILDING REQUIREMENTS OF PART 9, NBCC 2010, NBCC 2015

THIS DESIGN COMPLIES WITH:
- PART 9 OF OBC 2012, OBC 2018
- CSA 086-09, CSA 086-14
- TPIC 2011, TPIC 2014

(55 % OF 23.0 P.S.F. G.S.L. PLUS 8.4 P.S.F. RAIN LOAD) EQUALS 21.0 P.S.F. SPECIFIED ROOF LIVE LOAD

ALLOWABLE DEFL.(LL)= L/360 (1.09")
CALCULATED VERT. DEFL.(LL) = L/ 999 (0.14")
ALLOWABLE DEFL.(TL)= L/360 (1.09")
CALCULATED VERT. DEFL.(TL) = L/ 999 (0.28")

CANTILEVER DEFLECTION:
ALLOWABLE DEFL.(LL)= L/120 (0.19")
CALCULATED VERT. DEFL.(LL) = L/ 999 (0.01")
ALLOWABLE DEFL.(TL)= L/120 (0.19")
CALCULATED VERT. DEFL.(TL) = L/ 999 (0.01")

CSI: TC=0.58/1.00 (F-H:1) , BC=0.47/1.00 (P-R:1) , WB=0.91/1.00 (D-R:1) , SSI=0.23/1.00 (H-I:1)

DOL LUMBER=1.00 NAIL=1.00 LS BEND=1.10 COMP=1.10 SHEAR=1.10 TENS= 1.10

COMPANION LIVE LOAD FACTOR = 1.00

TRUSS PLATE MANUFACTURER IS NOT RESPONSIBLE FOR QUALITY CONTROL IN THE TRUSS MANUFACTURING PLANT .

NAIL VALUES

PLATE	GRIP(DRY) (PSI) MAX	MIN	SHEAR (PLI) MAX	MIN	SECTION (PLI) MAX	MIN
MT20	618	354	1667	788	1987	1656

PLATE PLACEMENT TOL. = 0.250 Inches

PLATE ROTATION TOL. = 5.0 Deg.

JSI GRIP= 0.90 (M) (INPUT = 0.90)
JSI METAL= 0.78 (E) (INPUT = 1.00)

A-18023532

CONTINUED ON PAGE 2

JOB NAME	TRUSS NAME	QUANTITY	PLY	JOB DESC.	DRWG NO.
292597	H13	1	1	TRUSS DESC.	

Alpa Roof Truss, Maple

Version 8.200 S Jan 6 2018 MiTek Industries, Inc. Sat Feb 17 14:30:07 2018 Page 1
ID:MF8liriaTok7DlbpT4B71Xys4PG-12B9YfPsdl1jHtxZxVbEszcn7jPdG2rhlwXOHWzkDR_

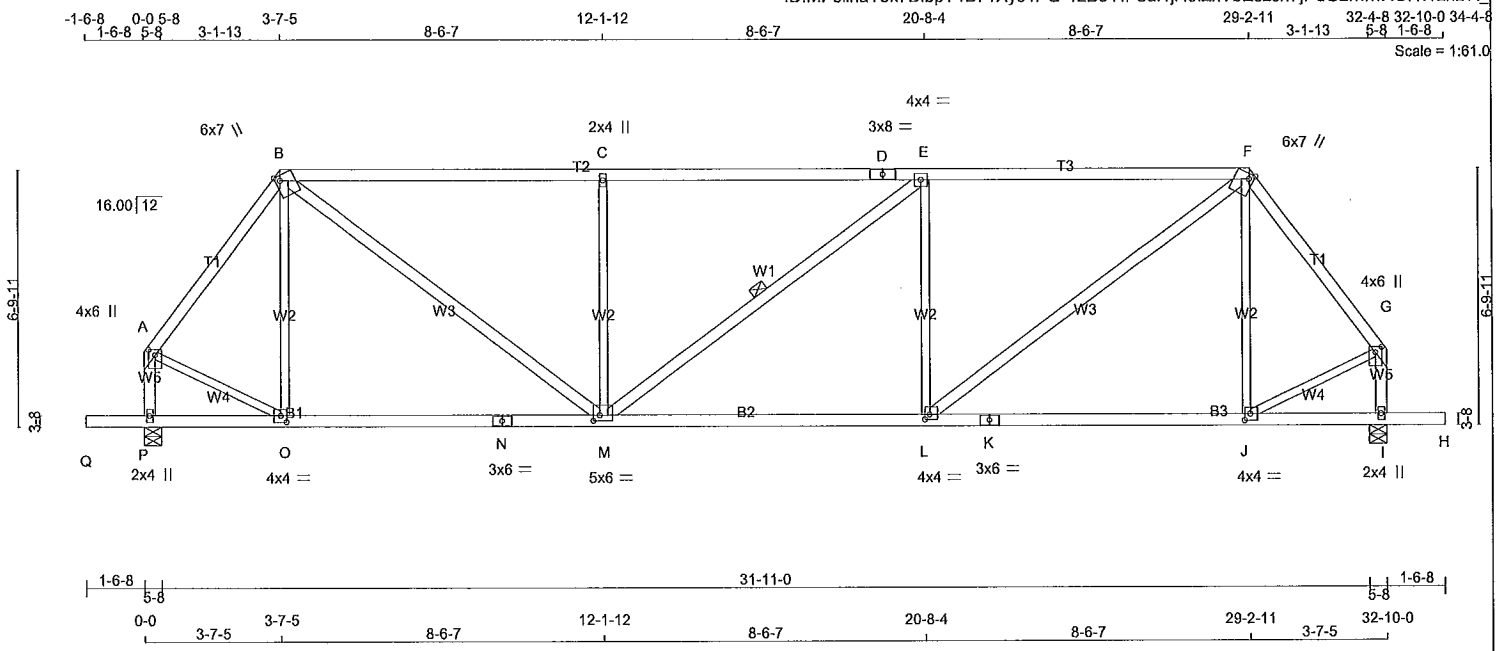

TOTAL WEIGHT = 150 lb

[M]

LUMBER

N. L. G. A. RULES

CHORDS	SIZE		LUMBER	DESCR.
A - B	2x4	DRY	No.2	SPF
B - D	2x4	DRY	1650F 1.5E	SPF
D - F	2x4	DRY	1650F 1.5E	SPF
F - G	2x4	DRY	No.2	SPF
P - A	2x4	DRY	No.2	SPF
I - G	2x4	DRY	No.2	SPF
Q - N	2x4	DRY	No.2	SPF
N - K	2x4	DRY	No.2	SPF
K - H	2x4	DRY	No.2	SPF
ALL WEBS EXCEPT	2x3	DRY	No.2	SPF
B - M	2x4	DRY	No.2	SPF
M - E	2x4	DRY	No.2	SPF
L - F	2x4	DRY	No.2	SPF

DRY: SEASONED LUMBER.

PLATES (table is in inches)

JT	TYPE	PLATES	W	LEN	Y	X
A	TMVW+p	MT20	4.0	6.0	1.75	2.00
B	TTWW+m	MT20	6.0	7.0	Edge	1.50
C	TMW+w	MT20	2.0	4.0		
D	TS-t	MT20	3.0	8.0		
E	TMWW-t	MT20	4.0	4.0		
F	TTWW+m	MT20	6.0	7.0	Edge	1.50
G	TMVW+p	MT20	4.0	6.0	1.75	2.00
I	BMV1+p	MT20	2.0	4.0		
J	BMWW-t	MT20	4.0	4.0	2.00	1.75
K	BS-t	MT20	3.0	6.0		
L	BMWW-t	MT20	4.0	4.0	1.50	1.50
M	BMWWW-t	MT20	5.0	6.0	1.75	2.00
N	BS-t	MT20	3.0	6.0		
O	BMWW-t	MT20	4.0	4.0	2.00	1.75
P	BMV1+p	MT20	2.0	4.0		

Edge - INDICATES REFERENCE CORNER OF PLATE TOUCHES EDGE OF CHORD.

NOTE: Lateral brace(s) shown shall be 1x4 for Part 9 design as per OBC 9.23.13.11, and no less than 2x4 for Part 4 design

REGISTERED PROFESSIONAL ENGINEER
02/17/2018
EDWIN C. FOK
PROVINCE OF ONTARIO

DIMENSIONS, SUPPORTS AND LOADINGS SPECIFIED BY FABRICATOR TO BE VERIFIED BY BUILDING DESIGNER

BEARINGS

JT	FACTORED GROSS REACTION VERT	HORZ	MAXIMUM FACTORED GROSS REACTION DOWN	HORZ	UPLIFT	INPUT BRG IN-SX	REQRD BRG IN-SX
P	1732	0	1732	0	0	5-8	2-9
I	1732	0	1732	0	0	5-8	2-9

UNFACTORED REACTIONS

JT	1ST LCASE COMBINED	MAX./MIN. COMPONENT REACTIONS SNOW	LIVE	PERM.LIVE	WIND	DEAD	SOIL
P	1235	754 / 0	0 / 0	0 / 0	0 / 0	481 / 0	0 / 0
I	1235	754 / 0	0 / 0	0 / 0	0 / 0	481 / 0	0 / 0

BEARING MATERIAL TO BE SPF NO.2 OR BETTER AT JOINT(S) P, I

BRACING

TOP CHORD TO BE SHEATHED OR MAX. PURLIN SPACING = 4.27 FT.
MAX. UNBRACED BOTTOM CHORD LENGTH = 10.00 FT OR RIGID CEILING DIRECTLY APPLIED.

ALL PITCH BREAKS AND PERIMETER CORNER JOINTS MUST BE LATERALLY RESTRAINED.

1 LATERAL BRACE(S) AT 1/ 2 LENGTH OF E-M.

END VERTICAL(S) MUST BE SHEATHED OR HAVE BRACES AS INDICATED IN THE MAX. UNBRACED LENGTH COLUMN OF THE TABLE BELOW

LOADING

TOTAL LOAD CASES: (4)

CHORDS

MEMB. FR-TO	MAX. FACTORED FORCE (LBS)	FACTORED VERT. LOAD (PLF) FROM	TO	LC1 CSI (LC)	MAX UNBRAC LENGTH
A- B	-1350 / 0	-78.0	-78.0	0.22 (1)	5.36
B- C	-1962 / 0	-78.0	-78.0	0.88 (1)	4.27
C- D	-1962 / 0	-78.0	-78.0	0.88 (1)	4.27
D- E	-1962 / 0	-78.0	-78.0	0.88 (1)	4.27
E- F	-1963 / 0	-78.0	-78.0	0.88 (1)	4.27
F- G	-1349 / 0	-78.0	-78.0	0.22 (1)	5.36
P- A	-1572 / 0	0.0	0.0	0.18 (1)	6.58
I- G	-1572 / 0	0.0	0.0	0.18 (1)	6.58
Q- P	0 / 0	-96.5	-96.5	0.16 (1)	10.00
P- O	0 / 0	-18.5	-18.5	0.20 (4)	10.00
O- N	0 / 801	-18.5	-18.5	0.35 (4)	10.00
N- M	0 / 801	-18.5	-18.5	0.35 (4)	10.00
M- L	0 / 1963	-18.5	-18.5	0.46 (1)	10.00
L- K	0 / 801	-18.5	-18.5	0.35 (4)	10.00
K- J	0 / 801	-18.5	-18.5	0.35 (4)	10.00
J- I	0 / 0	-18.5	-18.5	0.20 (4)	10.00
I- H	0 / 0	-96.5	-96.5	0.16 (1)	10.00

WEBS

MEMB. FR-TO	MAX. FACTORED FORCE (LBS)	MAX CSI (LC)
O- B	-215 / 8	0.17 (1)
B- M	0 / 1457	0.23 (1)
M- C	-720 / 0	0.56 (1)
M- E	0 / 0	0.00 (1)
L- E	-720 / 0	0.56 (1)
L- F	0 / 1458	0.23 (1)
J- F	-216 / 8	0.17 (1)
A- O	0 / 877	0.20 (1)
J- G	0 / 876	0.20 (1)

DESIGN CRITERIA

SPECIFIED LOADS:

TOP CH.	LL	=	21.0	PSF
	DL	=	6.0	PSF
BOT CH.	LL	=	0.0	PSF
	DL	=	7.4	PSF
TOTAL LOAD		=	34.4	PSF

SPACING = 24.0 IN. C/C

LOADING IN FLAT SECTION BASED ON A SLOPE OF 2.00/12 MINIMUM

THIS TRUSS IS DESIGNED FOR RESIDENTIAL OR SMALL BUILDING REQUIREMENTS OF PART 9, NBCC 2010, NBCC 2015

THIS DESIGN COMPLIES WITH:
- PART 9 OF OBC 2012, OBC 2018
- CSA 086-09, CSA 086-14
- TPIC 2011, TPIC 2014

(55 % OF 23.0 P.S.F. G.S.L. PLUS 8.4 P.S.F. RAIN LOAD) EQUALS 21.0 P.S.F. SPECIFIED ROOF LIVE LOAD

ALLOWABLE DEFL.(LL)= L/360 (1.09")
CALCULATED VERT. DEFL.(LL) = L/ 999 (0.08")
ALLOWABLE DEFL.(TL)= L/360 (1.09")
CALCULATED VERT. DEFL.(TL) = L/ 999 (0.20")

CANTILEVER DEFLECTION:
ALLOWABLE DEFL.(LL)= L/120 (0.19")
CALCULATED VERT. DEFL.(LL) = L/ 999 (0.01")
ALLOWABLE DEFL.(TL)= L/120 (0.19")
CALCULATED VERT. DEFL.(TL) = L/ 999 (0.01")

CSI: TC=0.88/1.00 (E-F:1) , BC=0.46/1.00 (L-M:1) , WB=0.56/1.00 (E-L:1) , SSI=0.31/1.00 (E-F:1)

DOL LUMBER=1.00 NAIL=1.00 LS BEND=1.10 COMP=1.10 SHEAR=1.10 TENS= 1.10

COMPANION LIVE LOAD FACTOR = 1.00

TRUSS PLATE MANUFACTURER IS NOT RESPONSIBLE FOR QUALITY CONTROL IN THE TRUSS MANUFACTURING PLANT .

NAIL VALUES

PLATE	GRIP(DRY) (PSI) MAX	MIN	SHEAR (PLI) MAX	MIN	SECTION (PLI) MAX	MIN
MT20	618	354	1667	788	1987	1656

PLATE PLACEMENT TOL. = 0.250 inches

PLATE ROTATION TOL. = 5.0 Deg.

JSI GRIP= 0.90 (B) (INPUT = 0.90)
JSI METAL= 0.48 (A) (INPUT = 1.00)

A-18023533

CONTINUED ON PAGE 2

JOB NAME	TRUSS NAME	QUANTITY	PLY	JOB DESC.	DRWG NO.
292597	H14	1	1	TRUSS DESC.	

Alpa Roof Truss, Maple

Version 8.200 S Jan 6 2018 MiTek Industries, Inc. Sat Feb 17 14:30:14 2018 Page 1

ID:MF8iiriaTok7DlbpT4B71Xys4PG-KO6p02UG_vvjcyzvrTDteSPylXoJP9ijvWjG?czkDQt

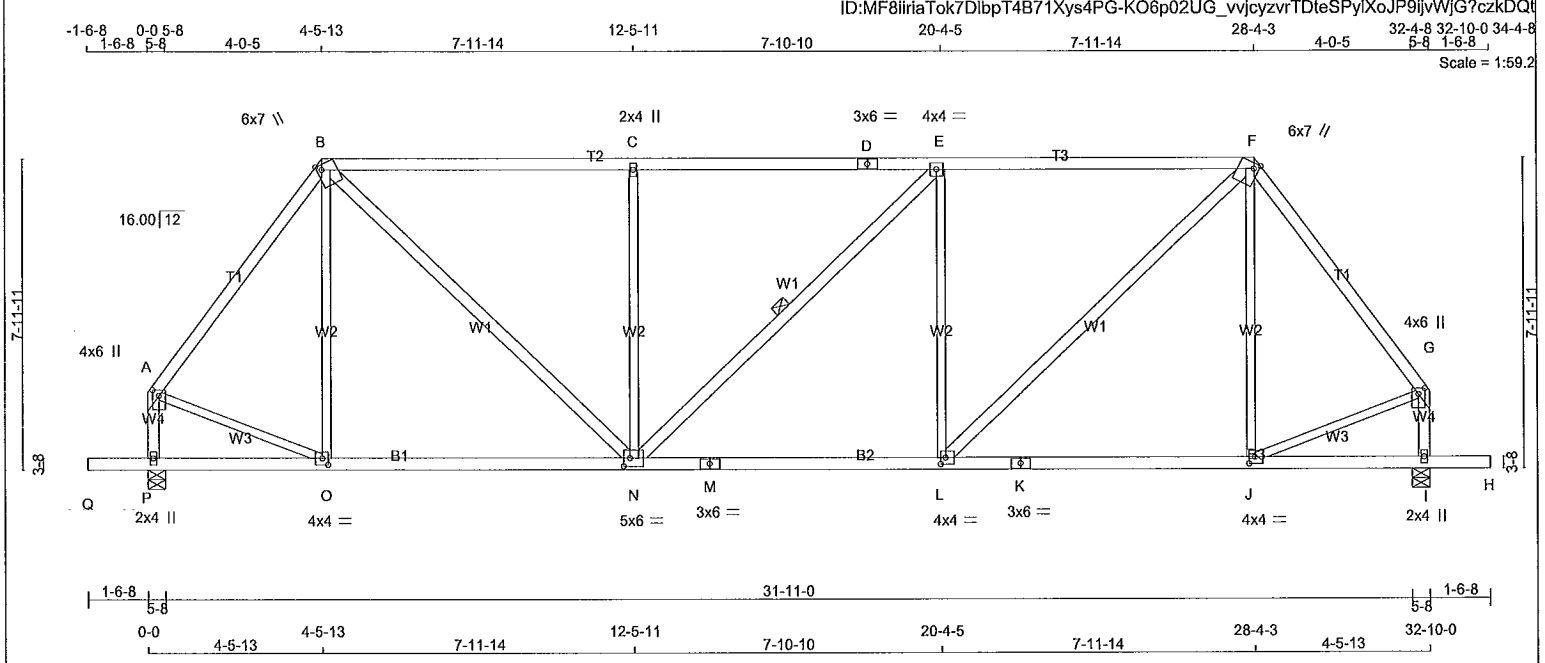

TOTAL WEIGHT = 158 lb

[M]

LUMBER

N. L. G. A. RULES

CHORDS	SIZE		LUMBER	DESCR.
A - B	2x4	DRY	No.2	SPF
B - D	2x4	DRY	No.2	SPF
D - F	2x4	DRY	No.2	SPF
F - G	2x4	DRY	No.2	SPF
P - A	2x4	DRY	No.2	SPF
I - G	2x4	DRY	No.2	SPF
Q - M	2x4	DRY	No.2	SPF
M - K	2x4	DRY	No.2	SPF
K - H	2x4	DRY	No.2	SPF
ALL WEBS	2x3	DRY	No.2	SPF
EXCEPT				
B - N	2x4	DRY	No.2	SPF
N - E	2x4	DRY	No.2	SPF
L - F	2x4	DRY	No.2	SPF

DRY: SEASONED LUMBER.

PLATES (table is in inches)

JT	TYPE	PLATES	W	LEN	Y	X
A	TMVW+p	MT20	4.0	6.0	1.75	2.00
B	TTWW+m	MT20	6.0	7.0	Edge	1.50
C	TMW+w	MT20	2.0	4.0		
D	TS-t	MT20	3.0	6.0		
E	TMWW-t	MT20	4.0	4.0		
F	TTWW+m	MT20	6.0	7.0	Edge	1.50
G	TMVW+p	MT20	4.0	6.0	1.75	2.00
I	BMV1+p	MT20	2.0	4.0		
J	BMWW-t	MT20	4.0	4.0	2.00	1.75
K	BS-t	MT20	3.0	6.0		
L	BMWW-t	MT20	4.0	4.0	2.00	1.50
M	BS-t	MT20	3.0	6.0		
N	BMWWW-t	MT20	5.0	6.0	2.50	2.00
O	BMWW-t	MT20	4.0	4.0	2.00	1.75
P	BMV1+p	MT20	2.0	4.0		

Edge - INDICATES REFERENCE CORNER OF PLATE TOUCHES EDGE OF CHORD.

NOTE: Lateral brace(s) shown shall be 1x4 for Part 9 design as per OBC 9.23.13.11, and no less than 2x4 for Part 4 design

REGISTERED PROFESSIONAL ENGINEER
02/17/2018
EDWIN C. FOK
PROVINCE OF ONTARIO

DIMENSIONS, SUPPORTS AND LOADINGS SPECIFIED BY FABRICATOR TO BE VERIFIED BY BUILDING DESIGNER

BEARINGS

JT	FACTORED GROSS REACTION VERT	HORZ	MAXIMUM FACTORED GROSS REACTION DOWN	HORZ	UPLIFT	INPUT BRG IN-SX	REQRD BRG IN-SX
P	1732	0	1732	0	0	5-8	2-9
I	1732	0	1732	0	0	5-8	2-9

UNFACTORED REACTIONS

JT	1ST LCASE COMBINED	MAX./MIN. COMPONENT REACTIONS SNOW	LIVE	PERM.LIVE	WIND	DEAD	SOIL
P	1235	754 / 0	0 / 0	0 / 0	0 / 0	481 / 0	0 / 0
I	1235	754 / 0	0 / 0	0 / 0	0 / 0	481 / 0	0 / 0

BEARING MATERIAL TO BE SPF NO.2 OR BETTER AT JOINT(S) P, I

BRACING

TOP CHORD TO BE SHEATHED OR MAX. PURLIN SPACING = 3.93 FT.
MAX. UNBRACED BOTTOM CHORD LENGTH = 10.00 FT OR RIGID CEILING DIRECTLY APPLIED.

ALL PITCH BREAKS AND PERIMETER CORNER JOINTS MUST BE LATERALLY RESTRAINED.

1 LATERAL BRACE(S) AT 1/ 2 LENGTH OF E-N.

END VERTICAL(S) MUST BE SHEATHED OR HAVE BRACES AS INDICATED IN THE MAX. UNBRACED LENGTH COLUMN OF THE TABLE BELOW

LOADING

TOTAL LOAD CASES: (4)

CHORDS

MEMB. FR-TO	MAX. FACTORED FORCE (LBS)	FACTORED VERT. LOAD LC1 (PLF) FROM	TO	MAX CSI (LC)	MAX. UNBRAC LENGTH
A- B	-1368 / 0	-78.0	-78.0	0.36 (1)	5.19
B- C	-1669 / 0	-78.0	-78.0	0.91 (1)	3.94
C- D	-1669 / 0	-78.0	-78.0	0.91 (1)	3.93
D- E	-1669 / 0	-78.0	-78.0	0.91 (1)	3.93
E- F	-1670 / 0	-78.0	-78.0	0.92 (1)	3.93
F- G	-1368 / 0	-78.0	-78.0	0.36 (1)	5.19
P- A	-1558 / 0	0.0	0.0	0.18 (1)	6.60
I- G	-1558 / 0	0.0	0.0	0.18 (1)	6.60
Q- P	0 / 0	-96.5	-96.5	0.16 (1)	10.00
P- O	0 / 0	-18.5	-18.5	0.18 (4)	10.00
O- N	0 / 814	-18.5	-18.5	0.31 (4)	10.00
N- M	0 / 1670	-18.5	-18.5	0.40 (1)	10.00
M- L	0 / 1670	-18.5	-18.5	0.40 (1)	10.00
L- K	0 / 814	-18.5	-18.5	0.31 (4)	10.00
K- J	0 / 814	-18.5	-18.5	0.31 (4)	10.00
J- I	0 / 0	-18.5	-18.5	0.18 (4)	10.00
I- H	0 / 0	-96.5	-96.5	0.16 (1)	10.00

WEBS

MEMB. FR-TO	MAX. FACTORED FORCE (LBS)	MAX CSI (LC)
O- B	-155 / 32	0.19 (1)
B- N	0 / 1182	0.19 (1)
N- C	-669 / 0	0.81 (1)
N- E	-1 / 0	0.00 (1)
L- E	-669 / 0	0.81 (1)
L- F	0 / 1184	0.19 (1)
J- F	-156 / 31	0.19 (1)
A- O	0 / 865	0.19 (1)
J- G	0 / 865	0.19 (1)

DESIGN CRITERIA

SPECIFIED LOADS:

TOP CH.	LL	=	21.0	PSF
	DL	=	6.0	PSF
BOT CH.	LL	=	0.0	PSF
	DL	=	7.4	PSF
TOTAL LOAD		=	34.4	PSF

SPACING = 24.0 IN. C/C

LOADING IN FLAT SECTION BASED ON A SLOPE OF 2.00/12 MINIMUM

THIS TRUSS IS DESIGNED FOR RESIDENTIAL OR SMALL BUILDING REQUIREMENTS OF PART 9, NBCC 2010, NBCC 2015

THIS DESIGN COMPLIES WITH:
- PART 9 OF OBC 2012, OBC 2018
- CSA 086-09, CSA 086-14
- TPIC 2011, TPIC 2014

(55 % OF 23.0 P.S.F. G.S.L. PLUS 8.4 P.S.F. RAIN LOAD) EQUALS 21.0 P.S.F. SPECIFIED ROOF LIVE LOAD

ALLOWABLE DEFL.(LL)= L/360 (1.09")
CALCULATED VERT. DEFL.(LL) = L/ 999 (0.07")
ALLOWABLE DEFL.(TL)= L/360 (1.09")
CALCULATED VERT. DEFL.(TL) = L/ 999 (0.16")

CANTILEVER DEFLECTION:
ALLOWABLE DEFL.(LL)= L/120 (0.19")
CALCULATED VERT. DEFL.(LL) = L/ 999 (0.01")
ALLOWABLE DEFL.(TL)= L/120 (0.19")
CALCULATED VERT. DEFL.(TL) = L/ 999 (0.01")

CSI: TC=0.92/1.00 (E-F:1) , BC=0.40/1.00 (L-N:1) , WB=0.81/1.00 (E-L:1) , SSI=0.29/1.00 (E-F:1)

DOL LUMBER=1.00 NAIL=1.00 LS BEND=1.10 COMP=1.10 SHEAR=1.10 TENS= 1.10

COMPANION LIVE LOAD FACTOR = 1.00

TRUSS PLATE MANUFACTURER IS NOT RESPONSIBLE FOR QUALITY CONTROL IN THE TRUSS MANUFACTURING PLANT .

NAIL VALUES

PLATE	GRIP(DRY) (PSI) MAX	MIN	SHEAR (PLI) MAX	MIN	SECTION (PLI) MAX	MIN
MT20	618	354	1667	788	1987	1656

PLATE PLACEMENT TOL. = 0.250 Inches

PLATE ROTATION TOL. = 5.0 Deg.

JSI GRIP= 0.89 (N) (INPUT = 0.90)
JSI METAL= 0.51 (M) (INPUT = 1.00)

A-18023534

CONTINUED ON PAGE 2

JOB NAME	TRUSS NAME	QUANTITY	PLY	JOB DESC.	DRWG NO.
292597	H15	1	1	TRUSS DESC.	

Alpa Roof Truss, Maple

Version 8.200 S Jan 6 2018 MiTek Industries, Inc. Sat Feb 17 14:30:26 2018 Page 1

ID:MF8iiriaTok7DlbpT4B71Xys4PG-ziqLX9dn9bQ03ouDY_Rh7zv3LNwsDhCUgNdvRvzkDQh

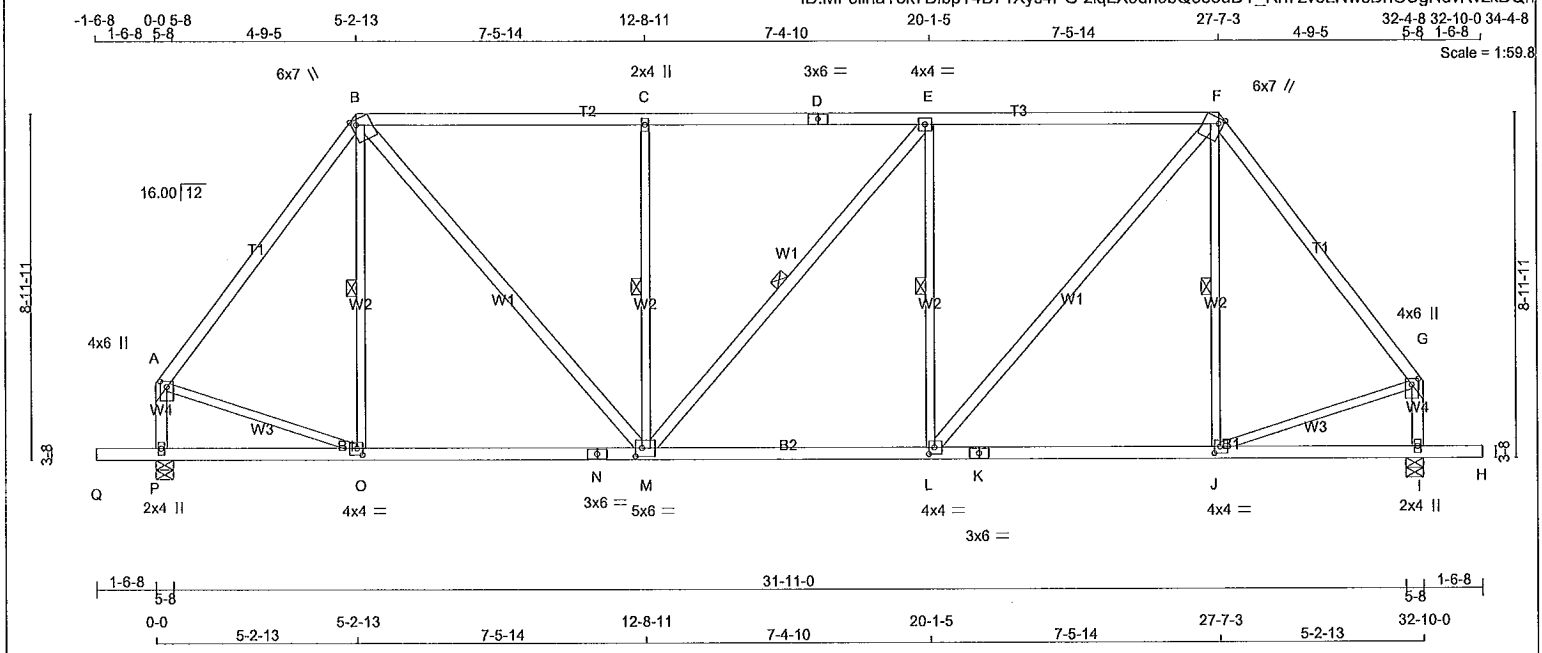

TOTAL WEIGHT = 164 lb

(M)

LUMBER

N. L. G. A. RULES

CHORDS	SIZE		LUMBER	DESCR.
A - B	2x4	DRY	No.2	SPF
B - D	2x4	DRY	No.2	SPF
D - F	2x4	DRY	No.2	SPF
F - G	2x4	DRY	No.2	SPF
P - A	2x4	DRY	No.2	SPF
I - G	2x4	DRY	No.2	SPF
Q - N	2x4	DRY	No.2	SPF
N - K	2x4	DRY	No.2	SPF
K - H	2x4	DRY	No.2	SPF
ALL WEBS	2x3	DRY	No.2	SPF
EXCEPT				
B - M	2x4	DRY	No.2	SPF
M - E	2x4	DRY	No.2	SPF
L - F	2x4	DRY	No.2	SPF

DRY: SEASONED LUMBER.

PLATES (table Is In Inches)

JT	TYPE	PLATES	W	LEN	Y	X
A	TMVW+p	MT20	4.0	6.0	1.75	2.00
B	TTWW+m	MT20	6.0	7.0	Edge	1.50
C	TMW+w	MT20	2.0	4.0		
D	TS-t	MT20	3.0	6.0		
E	TMWW-t	MT20	4.0	4.0		
F	TTWW+m	MT20	6.0	7.0	Edge	1.50
G	TMVW+p	MT20	4.0	6.0	1.75	2.00
I	BMV1+p	MT20	2.0	4.0		
J, L, O						
J	BMWW-t	MT20	4.0	4.0	2.00	1.75
K	BS-t	MT20	3.0	6.0		
M	BMWWW-t	MT20	5.0	6.0	2.50	2.00
N	BS-t	MT20	3.0	6.0		
P	BMV1+p	MT20	2.0	4.0		

Edge - INDICATES REFERENCE CORNER OF PLATE TOUCHES EDGE OF CHORD.

NOTE: Lateral brace(s) shown shall be 1x4 for Part 9 design as per OBC 9.23.13.11, and no less than 2x4 for Part 4 design

REGISTERED PROFESSIONAL ENGINEER
02/17/2018
EDWIN C. FOK
PROVINCE OF ONTARIO

DIMENSIONS, SUPPORTS AND LOADINGS SPECIFIED BY FABRICATOR TO BE VERIFIED BY BUILDING DESIGNER

BEARINGS

JT	FACTORED GROSS REACTION VERT	HORZ	MAXIMUM FACTORED GROSS REACTION DOWN	HORZ	UPLIFT	INPUT BRG IN-SX	REQRD BRG IN-SX
P	1732	0	1732	0	0	5-8	2-9
I	1732	0	1732	0	0	5-8	2-9

UNFACTORED REACTIONS

JT	1ST LCASE COMBINED	MAX./MIN. COMPONENT REACTIONS SNOW	LIVE	PERM.LIVE	WIND	DEAD	SOIL
P	1235	754 / 0	0 / 0	0 / 0	0 / 0	481 / 0	0 / 0
I	1235	754 / 0	0 / 0	0 / 0	0 / 0	481 / 0	0 / 0

BEARING MATERIAL TO BE SPF NO.2 OR BETTER AT JOINT(S) P, I

BRACING

TOP CHORD TO BE SHEATHED OR MAX. PURLIN SPACING = 4.39 FT.
MAX. UNBRACED BOTTOM CHORD LENGTH = 10.00 FT OR RIGID CEILING DIRECTLY APPLIED.

ALL PITCH BREAKS AND PERIMETER CORNER JOINTS MUST BE LATERALLY RESTRAINED.

1 LATERAL BRACE(S) AT 1/ 2 LENGTH OF B-O, C-M, E-M, E-L, F-J.

END VERTICAL(S) MUST BE SHEATHED OR HAVE BRACES AS INDICATED IN THE MAX. UNBRACED LENGTH COLUMN OF THE TABLE BELOW

LOADING

TOTAL LOAD CASES: (4)

CHORDS

MEMB. FR-TO	MAX. FACTORED FORCE (LBS)	FACTORED VERT. LOAD (PLF) FROM	TO	LC1 CSI (LC)	MAX UNBRAC LENGTH
A- B	-1369 / 0	-78.0	-78.0	0.53 (1)	5.02
B- C	-1479 / 0	-78.0	-78.0	0.74 (1)	4.41
C- D	-1479 / 0	-78.0	-78.0	0.74 (1)	4.39
D- E	-1479 / 0	-78.0	-78.0	0.74 (1)	4.39
E- F	-1480 / 0	-78.0	-78.0	0.75 (1)	4.39
F- G	-1369 / 0	-78.0	-78.0	0.53 (1)	5.02
P- A	-1548 / 0	0.0	0.0	0.18 (1)	6.61
I- G	-1548 / 0	0.0	0.0	0.18 (1)	6.61
Q- P	0 / 0	-96.5	-96.5	0.16 (1)	10.00
P- O	0 / 0	-18.5	-18.5	0.18 (4)	10.00
O- N	0 / 817	-18.5	-18.5	0.28 (4)	10.00
N- M	0 / 817	-18.5	-18.5	0.28 (4)	10.00
M- L	0 / 1480	-18.5	-18.5	0.35 (1)	10.00
L- K	0 / 816	-18.5	-18.5	0.28 (4)	10.00
K- J	0 / 816	-18.5	-18.5	0.28 (4)	10.00
J- I	0 / 0	-18.5	-18.5	0.18 (4)	10.00
I- H	0 / 0	-96.5	-96.5	0.16 (1)	10.00

WEBS

MEMB. FR-TO	MAX. FACTORED FORCE (LBS)	MAX CSI (LC)
O- B	-115 / 49	0.06 (1)
B- M	0 / 1011	0.16 (1)
M- C	-626 / 0	0.33 (1)
M- E	-1 / 0	0.00 (1)
L- E	-627 / 0	0.33 (1)
L- F	0 / 1013	0.16 (1)
J- F	-116 / 49	0.06 (1)
A- O	0 / 854	0.19 (1)
J- G	0 / 854	0.19 (1)

DESIGN CRITERIA

SPECIFIED LOADS:

TOP CH.	LL	=	21.0	PSF
	DL	=	6.0	PSF
BOT CH.	LL	=	0.0	PSF
	DL	=	7.4	PSF
TOTAL LOAD		=	34.4	PSF

SPACING = 24.0 IN. C/C

LOADING IN FLAT SECTION BASED ON A SLOPE OF 2.00/12 MINIMUM

THIS TRUSS IS DESIGNED FOR RESIDENTIAL OR SMALL BUILDING REQUIREMENTS OF PART 9, NBCC 2010, NBCC 2015

THIS DESIGN COMPLIES WITH:
- PART 9 OF OBC 2012, OBC 2018
- CSA 086-09, CSA 086-14
- TPIC 2011, TPIC 2014

(55 % OF 23.0 P.S.F. G.S.L. PLUS 8.4 P.S.F. RAIN LOAD) EQUALS 21.0 P.S.F. SPECIFIED ROOF LIVE LOAD

ALLOWABLE DEFL.(LL)= L/360 (1.09")
CALCULATED VERT. DEFL.(LL) = L/ 999 (0.06")
ALLOWABLE DEFL.(TL)= L/360 (1.09")
CALCULATED VERT. DEFL.(TL) = L/ 999 (0.13")

CANTILEVER DEFLECTION:
ALLOWABLE DEFL.(LL)= L/120 (0.19")
CALCULATED VERT. DEFL.(LL) = L/ 999 (0.01")
ALLOWABLE DEFL.(TL)= L/120 (0.19")
CALCULATED VERT. DEFL.(TL) = L/ 999 (0.01")

CSI: TC=0.75/1.00 (E-F:1) , BC=0.35/1.00 (L-M:1) , WB=0.33/1.00 (E-L:1) , SSI=0.27/1.00 (E-F:1)

DOL LUMBER=1.00 NAIL=1.00 LS BEND=1.10 COMP=1.10 SHEAR=1.10 TENS= 1.10

COMPANION LIVE LOAD FACTOR = 1.00

TRUSS PLATE MANUFACTURER IS NOT RESPONSIBLE FOR QUALITY CONTROL IN THE TRUSS MANUFACTURING PLANT .

NAIL VALUES

PLATE	GRIP(DRY) (PSI) MAX	MIN	SHEAR (PLI) MAX	MIN	SECTION (PLI) MAX	MIN
MT20	618	354	1667	788	1987	1656

PLATE PLACEMENT TOL. = 0.250 Inches

PLATE ROTATION TOL. = 5.0 Deg.

JSI GRIP= 0.89 (L) (INPUT = 0.90)
JSI METAL= 0.50 (A) (INPUT = 1.00)

A-18023535

CONTINUED ON PAGE 2

JOB NAME	TRUSS NAME	QUANTITY	PLY	JOB DESC.	DRWG NO.
292597	H16	9	1	TRUSS DESC.	

Alpa Roof Truss, Maple

Version 8.200 S Jan 6 2018 MiTek Industries, Inc. Sat Feb 17 14:30:47 2018 Page 1

ID:MF8iiriaTok7DlbpT4B71Xys4PG-skbHxLuyD23240_FHvJcUPGhVr4CdAlaV8DWgBzkDQM

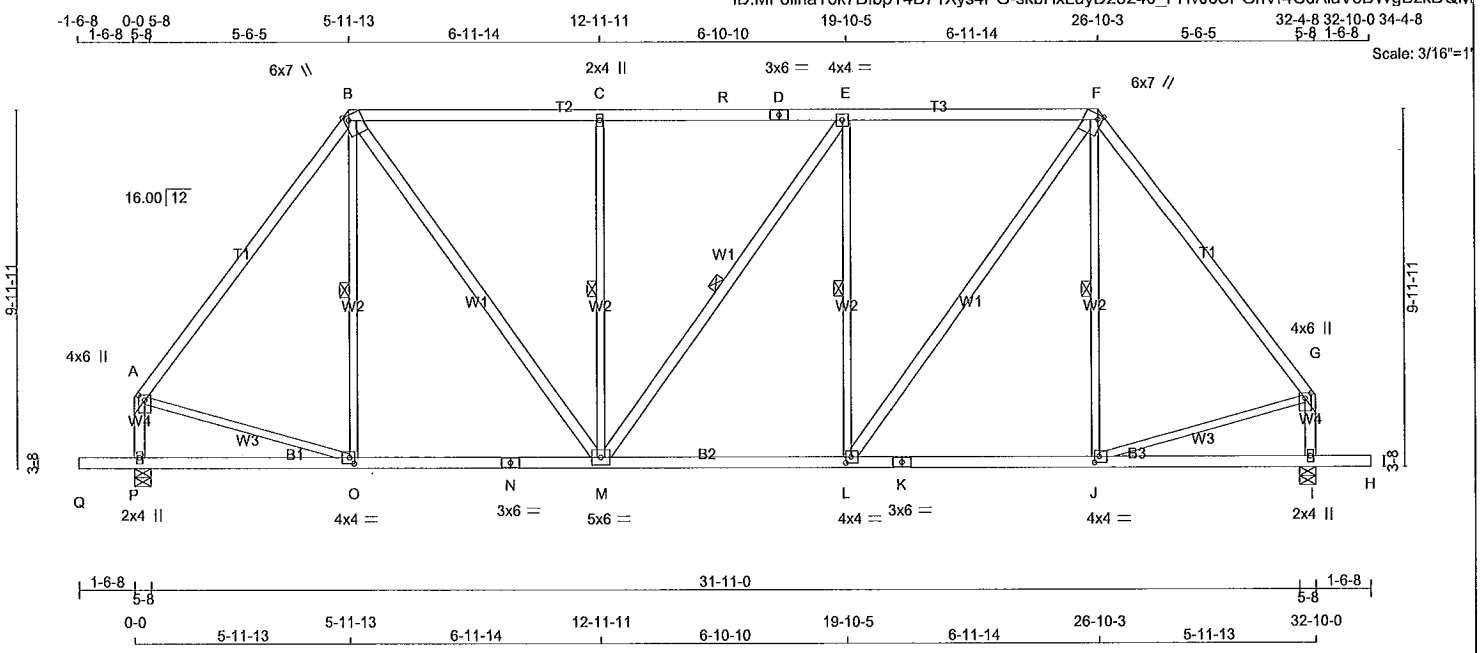

TOTAL WEIGHT = 9 X 172 = 1545 lb

LUMBER

N. L. G. A. RULES

CHORDS	SIZE		LUMBER	DESCR.
A - B	2x4	DRY	2100F 1.8E	SPF
B - D	2x4	DRY	No.2	SPF
D - F	2x4	DRY	No.2	SPF
F - G	2x4	DRY	2100F 1.8E	SPF
P - A	2x4	DRY	No.2	SPF
I - G	2x4	DRY	No.2	SPF
Q - N	2x4	DRY	No.2	SPF
N - K	2x4	DRY	No.2	SPF
K - H	2x4	DRY	No.2	SPF
ALL WEBS	2x3	DRY	No.2	SPF
EXCEPT				
B - M	2x4	DRY	No.2	SPF
M - E	2x4	DRY	No.2	SPF
L - F	2x4	DRY	No.2	SPF

DRY: SEASONED LUMBER.

PLATES (table is in inches)

JT	TYPE	PLATES	W	LEN	Y	X
A	TMVW+p	MT20	4.0	6.0	1.75	2.00
B	TTWW+m	MT20	6.0	7.0	Edge	1.50
C	TMW+w	MT20	2.0	4.0		
D	TS-t	MT20	3.0	6.0		
E	TMWW-t	MT20	4.0	4.0		
F	TTWW+m	MT20	6.0	7.0	Edge	1.50
G	TMVW+p	MT20	4.0	6.0	1.75	2.00
I	BMV1+p	MT20	2.0	4.0		
J	BMWW-t	MT20	4.0	4.0	2.00	1.50
K	BS-t	MT20	3.0	6.0		
L	BMWW-t	MT20	4.0	4.0	2.00	1.75
M	BMWWW-t	MT20	5.0	6.0		
N	BS-t	MT20	3.0	6.0		
O	BMWW-t	MT20	4.0	4.0	2.00	1.50
P	BMV1+p	MT20	2.0	4.0		

Edge - INDICATES REFERENCE CORNER OF PLATE TOUCHES EDGE OF CHORD.

NOTE: Lateral brace(s) shown shall be 1x4 for Part 9 design as per OBC 9.23.13.11, and no less than 2x4 for Part 4 design

REGISTERED PROFESSIONAL ENGINEER
02/17/2018
EDWIN C. FOK
PROVINCE OF ONTARIO

DIMENSIONS, SUPPORTS AND LOADINGS SPECIFIED BY FABRICATOR TO BE VERIFIED BY BUILDING DESIGNER

BEARINGS

JT	FACTORED GROSS REACTION VERT	HORZ	MAXIMUM FACTORED GROSS REACTION DOWN	HORZ	UPLIFT	INPUT BRG IN-SX	REQRD BRG IN-SX
P	1811	0	1811	0	0	5-8	2-11
I	1811	0	1811	0	0	5-8	2-11

UNFACTORED REACTIONS

JT	1ST LCASE COMBINED	MAX./MIN. COMPONENT REACTIONS SNOW	LIVE	PERM.LIVE	WIND	DEAD	SOIL
P	1298	754 / 0	0 / 0	0 / 0	0 / 0	544 / 0	0 / 0
I	1298	754 / 0	0 / 0	0 / 0	0 / 0	544 / 0	0 / 0

BEARING MATERIAL TO BE SPF NO.2 OR BETTER AT JOINT(S) P, I

BRACING

FOR SECTION B-F, MAX. PURLIN SPACING = 2.00 FT.
FOR OTHER SECTIONS, TOP CHORD TO BE SHEATHED OR MAX. PURLIN SPACING = 6.15 FT.
MAX. UNBRACED BOTTOM CHORD LENGTH = 10.00 FT OR RIGID CEILING DIRECTLY APPLIED.

ALL PITCH BREAKS AND PERIMETER CORNER JOINTS MUST BE LATERALLY RESTRAINED.

1 LATERAL BRACE(S) AT 1/ 2 LENGTH OF B-O, C-M, E-M, E-L, F-J.

END VERTICAL(S) MUST BE SHEATHED OR HAVE BRACES AS INDICATED IN THE MAX. UNBRACED LENGTH COLUMN OF THE TABLE BELOW

LOADING

TOTAL LOAD CASES: (4)

CHORDS

MEMB. FR-TO	MAX. FACTORED FORCE (LBS)	FACTORED VERT. LOAD LC1 (PLF) FROM	TO	MAX CSI (LC)	MAX. UNBRAC LENGTH
A- B	-1444 / 0	-78.0	-78.0	0.29 (1)	6.15
B- C	-1417 / 0	-85.5	-85.5	0.53 (1)	2.00
C- R	-1418 / 0	-85.5	-85.5	0.47 (1)	2.00
R- D	-1418 / 0	-85.5	-85.5	0.47 (1)	2.00
D- E	-1418 / 0	-85.5	-85.5	0.47 (1)	2.00
E- F	-1418 / 0	-85.5	-85.5	0.53 (1)	2.00
F- G	-1444 / 0	-78.0	-78.0	0.29 (1)	6.16
P- A	-1619 / 0	0.0	0.0	0.19 (1)	6.50
I- G	-1618 / 0	0.0	0.0	0.19 (1)	6.50
Q- P	0 / 0	-96.5	-96.5	0.16 (1)	10.00
P- O	0 / 0	-18.5	-18.5	0.18 (4)	10.00
O- N	0 / 862	-18.5	-18.5	0.28 (4)	10.00
N- M	0 / 862	-18.5	-18.5	0.28 (4)	10.00
M- L	0 / 1419	-18.5	-18.5	0.32 (1)	10.00
L- K	0 / 862	-18.5	-18.5	0.28 (4)	10.00
K- J	0 / 862	-18.5	-18.5	0.28 (4)	10.00
J- I	0 / 0	-18.5	-18.5	0.18 (4)	10.00
I- H	0 / 0	-96.5	-96.5	0.16 (1)	10.00

WEBS

MEMB. FR-TO	MAX. FACTORED FORCE (LBS)	MAX CSI (LC)
O- B	-92 / 51	0.06 (1)
B- M	0 / 946	0.15 (1)
M- C	-640 / 0	0.43 (1)
M- E	-2 / 0	0.00 (1)
L- E	-641 / 0	0.43 (1)
L- F	0 / 948	0.15 (1)
J- F	-94 / 51	0.06 (1)
A- O	0 / 893	0.20 (1)
J- G	0 / 892	0.20 (1)

DESIGN CRITERIA

SPECIFIED LOADS:

TOP CH.	LL	=	21.0	PSF
	DL	=	6.0	PSF
BOT CH.	LL	=	0.0	PSF
	DL	=	7.4	PSF
TOTAL LOAD		=	34.4	PSF

SPACING = 24.0 IN. C/C

LOADING IN FLAT SECTION BASED ON PIGGYBACK TRUSS WITH SLOPES OF 6.00/12 AND -6.00/12 AND RESPECTIVE WALL HEIGHTS OF 0-0 AND 0-0 AND AN ADDITIONAL DEAD LOAD OF 3.0 P.S.F.

THIS TRUSS IS DESIGNED FOR RESIDENTIAL OR SMALL BUILDING REQUIREMENTS OF PART 9, NBCC 2010, NBCC 2015

THIS DESIGN COMPLIES WITH:
- PART 9 OF OBC 2012, OBC 2018
- CSA 086-09, CSA 086-14
- TPIC 2011, TPIC 2014

(55 % OF 23.0 P.S.F. G.S.L. PLUS 8.4 P.S.F. RAIN LOAD) EQUALS 21.0 P.S.F. SPECIFIED ROOF LIVE LOAD

ALLOWABLE DEFL.(LL)= L/360 (1.09")
CALCULATED VERT. DEFL.(LL) = L/ 999 (0.05")
ALLOWABLE DEFL.(TL)= L/360 (1.09")
CALCULATED VERT. DEFL.(TL) = L/ 999 (0.12")

CANTILEVER DEFLECTION:
ALLOWABLE DEFL.(LL)= L/120 (0.19")
CALCULATED VERT. DEFL.(LL) = L/ 999 (0.01")
ALLOWABLE DEFL.(TL)= L/120 (0.19")
CALCULATED VERT. DEFL.(TL) = L/ 999 (0.01")

CSI: TC=0.53/1.00 (E-F:1) , BC=0.32/1.00 (L-M:1) , WB=0.43/1.00 (E-L:1) , SSI=0.28/1.00 (E-F:1)

DOL LUMBER=1.00 NAIL=1.00 LS BEND=1.10 COMP=1.10 SHEAR=1.10 TENS= 1.10

COMPANION LIVE LOAD FACTOR = 1.00

TRUSS PLATE MANUFACTURER IS NOT RESPONSIBLE FOR QUALITY CONTROL IN THE TRUSS MANUFACTURING PLANT .

NAIL VALUES

PLATE	GRIP(DRY) (PSI) MAX	MIN	SHEAR (PLI) MAX	MIN	SECTION (PLI) MAX	MIN
MT20	618	354	1667	788	1987	1656

PLATE PLACEMENT TOL. = 0.250 inches

PLATE ROTATION TOL. = 5.0 Deg.

JSI GRIP= 0.89 (B) (INPUT = 0.90)
JSI METAL= 0.54 (A) (INPUT = 1.00)

A-18023536

CONTINUED ON PAGE 2

JOB NAME	TRUSS NAME	QUANTITY	PLY	JOB DESC.	DRWG NO.
292597	H17P	1	1	TRUSS DESC.	

Alpa Roof Truss, Maple

Version 8.200 S Jan 6 2018 MiTek Industries, Inc. Sat Feb 17 14:30:59 2018 Page 1

ID:MF8iiriaTok7DlbpT4B71Xys4PG-W2KpTR1UOkaLWsvY_QXRzxmotgD?RhJLG0795VzkDQA

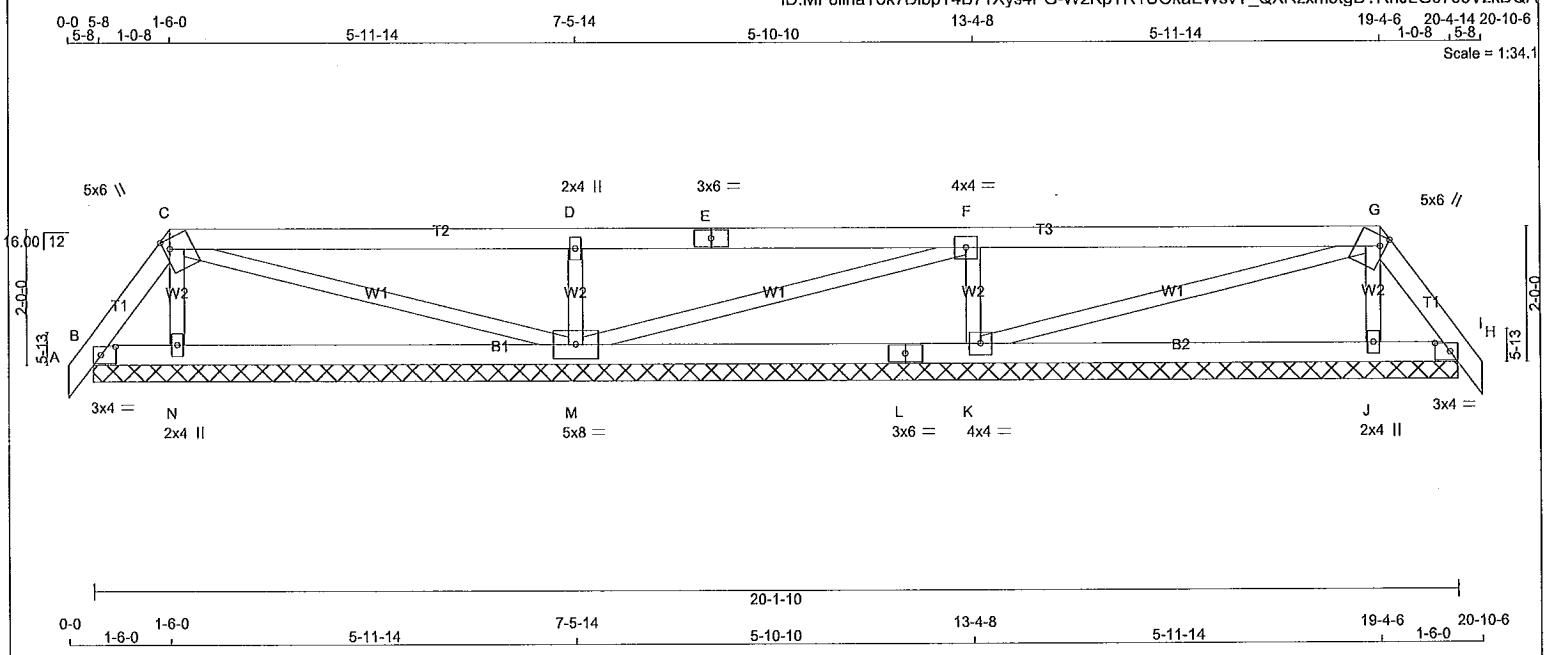

TOTAL WEIGHT = 69 lb

[M]

LUMBER

N. L. G. A. RULES

CHORDS	SIZE		LUMBER	DESCR.
A - C	2x4	DRY	No.2	SPF
C - E	2x4	DRY	No.2	SPF
E - G	2x4	DRY	No.2	SPF
G - I	2x4	DRY	No.2	SPF
B - L	2x4	DRY	No.2	SPF
L - H	2x4	DRY	No.2	SPF
ALL WEBS	2x3	DRY	No.2	SPF

DRY: SEASONED LUMBER.

PLATES (table is in inches)

JT	TYPE	PLATES	W	LEN	Y	X
B	TMB1-I	MT20	3.0	4.0	1.50	2.75
C	TTWW+m	MT20	5.0	6.0	1.75	1.00
D	TMW+w	MT20	2.0	4.0		
E	TS-t	MT20	3.0	6.0		
F	TMWW-t	MT20	4.0	4.0		
G	TTWW+m	MT20	5.0	6.0	1.75	1.00
H	TMB1-I	MT20	3.0	4.0	1.50	2.75
J	BMW1+w	MT20	2.0	4.0		
K	BMWW1-t	MT20	4.0	4.0		
L	BS-t	MT20	3.0	6.0		
M	BMWWW1-t	MT20	5.0	8.0		
N	BMW1+w	MT20	2.0	4.0		

NOTE: Lateral brace(s) shown shall be 1x4 for Part 9 design as per OBC 9.23.13.11, and no less than 2x4 for Part 4 design

REGISTERED PROFESSIONAL ENGINEER
02/17/2018
EDWIN C. FOK
PROVINCE OF ONTARIO

DIMENSIONS, SUPPORTS AND LOADINGS SPECIFIED BY FABRICATOR TO BE VERIFIED BY BUILDING DESIGNER

BEARINGS

JT	FACTORED GROSS REACTION VERT	HORZ	MAXIMUM FACTORED GROSS REACTION DOWN	HORZ	UPLIFT	INPUT BRG IN-SX	REQRD BRG IN-SX
B	110	0	110	0	0	20-1-10 (8-1-10)	2-12
N	271	0	271	0	0	20-1-10 (8-1-10)	2-12
M	633	0	633	0	0	20-1-10 (8-1-10)	2-12
K	618	0	618	0	0	20-1-10 (8-1-10)	2-12
J	265	0	265	0	0	20-1-10 (8-1-10)	2-12
H	120	0	120	0	0	20-1-10 (8-1-10)	2-12

VALUE IN PARENTHESIS INDICATES EFFECTIVE BEARING LENGTH

UNFACTORED REACTIONS

JT	1ST LCASE COMBINED	MAX./MIN. COMPONENT REACTIONS SNOW	LIVE	PERM.LIVE	WIND	DEAD	SOIL
B	74	72 / 0	0 / 0	0 / 0	0 / 0	1 / 0	0 / 0
N	199	93 / 0	0 / 0	0 / 0	0 / 0	106 / 0	0 / 0
M	450	281 / 0	0 / 0	0 / 0	0 / 0	169 / 0	0 / 0
K	440	273 / 0	0 / 0	0 / 0	0 / 0	167 / 0	0 / 0
J	194	89 / 0	0 / 0	0 / 0	0 / 0	105 / 0	0 / 0
H	81	78 / 0	0 / 0	0 / 0	0 / 0	3 / 0	0 / 0

BEARING MATERIAL TO BE SPF NO.2 OR BETTER AT JOINT(S) B, N, M, K, J, H

BRACING

TOP CHORD TO BE SHEATHED OR MAX. PURLIN SPACING = 6.25 FT.
MAX. UNBRACED BOTTOM CHORD LENGTH = 10.00 FT OR RIGID CEILING DIRECTLY APPLIED.

ALL PITCH BREAKS AND PERIMETER CORNER JOINTS MUST BE LATERALLY RESTRAINED.

LOADING

TOTAL LOAD CASES: (4)

CHORDS

MEMB. FR-TO	MAX. FACTORED FORCE (LBS)	FACTORED VERT. LOAD LC1 (PLF) FROM	TO	MAX CSI (LC)	MAX. UNBRAC LENGTH
A- B	0 / 14	-78.0	-78.0	0.01 (1)	10.00
B- C	-64 / 0	-78.0	-78.0	0.02 (1)	6.25
C- D	0 / 2	-78.0	-78.0	0.37 (1)	10.00
D- E	0 / 2	-78.0	-78.0	0.37 (1)	10.00
E- F	0 / 2	-78.0	-78.0	0.37 (1)	10.00
F- G	-17 / 0	-78.0	-78.0	0.37 (1)	6.25
G- H	-76 / 0	-78.0	-78.0	0.02 (1)	6.25
H- I	0 / 14	-78.0	-78.0	0.01 (1)	10.00
B- N	0 / 36	-18.5	-18.5	0.10 (4)	10.00
N- M	0 / 25	-18.5	-18.5	0.13 (4)	10.00
M- L	0 / 18	-18.5	-18.5	0.13 (4)	10.00
L- K	0 / 18	-18.5	-18.5	0.13 (4)	10.00
K- J	0 / 32	-18.5	-18.5	0.13 (4)	10.00
J- H	0 / 43	-18.5	-18.5	0.11 (4)	10.00

WEBS

MEMB. FR-TO	MAX. FACTORED FORCE (LBS)	MAX CSI (LC)
N- C	-172 / 0	0.03 (1)
C- M	-28 / 0	0.02 (1)
M- D	-509 / 0	0.07 (1)
M- F	-20 / 0	0.01 (1)
K- F	-503 / 0	0.07 (1)
K- G	-15 / 0	0.01 (1)
J- G	-166 / 0	0.02 (1)

DESIGN CRITERIA

SPECIFIED LOADS:

TOP CH.	LL	=	21.0	PSF
	DL	=	6.0	PSF
BOT CH.	LL	=	0.0	PSF
	DL	=	7.4	PSF
TOTAL LOAD		=	34.4	PSF

SPACING = 24.0 IN. C/C

LOADING IN FLAT SECTION BASED ON A SLOPE OF 2.00/12 MINIMUM

THIS TRUSS IS DESIGNED FOR RESIDENTIAL OR SMALL BUILDING REQUIREMENTS OF PART 9, NBCC 2010, NBCC 2015

THIS DESIGN COMPLIES WITH:
- PART 9 OF OBC 2012, OBC 2018
- CSA 086-09, CSA 086-14
- TPIC 2011, TPIC 2014

(55 % OF 23.0 P.S.F. G.S.L. PLUS 8.4 P.S.F. RAIN LOAD) EQUALS 21.0 P.S.F. SPECIFIED ROOF LIVE LOAD

CSI: TC=0.37/1.00 (F-G:1) , BC=0.13/1.00 (J-K:4) , WB=0.07/1.00 (D-M:1) , SSI=0.22/1.00 (F-G:1)

DOL LUMBER=1.00 NAIL=1.00 LS BEND=1.10 COMP=1.10 SHEAR=1.10 TENS= 1.10

COMPANION LIVE LOAD FACTOR = 1.00

TRUSS PLATE MANUFACTURER IS NOT RESPONSIBLE FOR QUALITY CONTROL IN THE TRUSS MANUFACTURING PLANT .

NAIL VALUES

PLATE	GRIP(DRY) (PSI) MAX	MIN	SHEAR (PLI) MAX	MIN	SECTION (PLI) MAX	MIN
MT20	618	354	1667	788	1987	1656

PLATE PLACEMENT TOL. = 0.250 Inches

PLATE ROTATION TOL. = 5.0 Deg.

JSI GRIP= 0.79 (K) (INPUT = 0.90)
JSI METAL= 0.11 (D) (INPUT = 1.00)

A-18023537

JOB NAME	TRUSS NAME	QUANTITY	PLY	JOB DESC.	DRWG NO.
292597	H18P	1	1	TRUSS DESC.	

Alpa Roof Truss, Maple

Version 8.200 S Jan 6 2018 MiTek Industries, Inc. Sat Feb 17 14:31:05 2018 Page 1

ID:MF8iiriaTok7DlbpT4B71Xys4PG-KCh5jV6FzaLUEnNiKhdrCC0hH5EKrNqEeyaTJ9zkDQ4

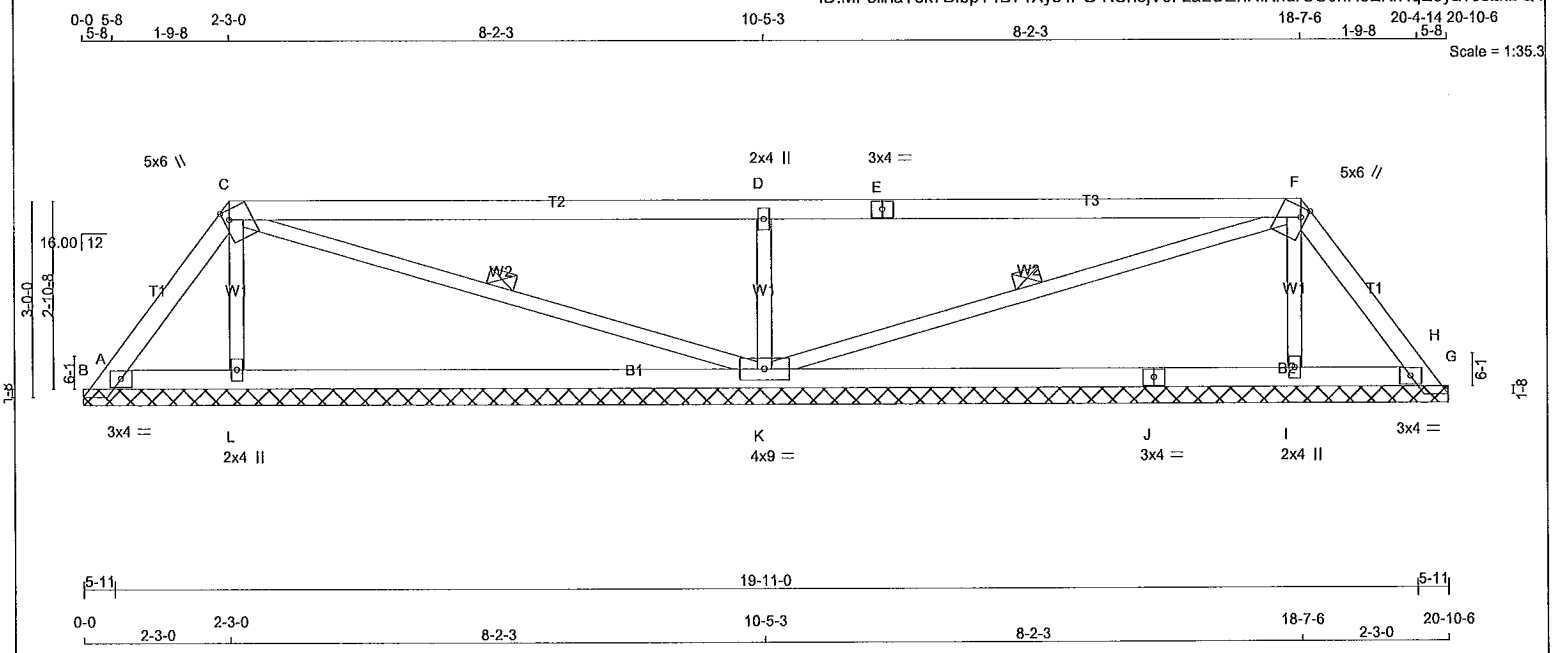

TOTAL WEIGHT = 69 lb

LUMBER

N. L. G. A. RULES

CHORDS	SIZE		LUMBER	DESCR.
A - C	2x4	DRY	No.2	SPF
C - E	2x4	DRY	No.2	SPF
E - F	2x4	DRY	No.2	SPF
F - H	2x4	DRY	No.2	SPF
B - J	2x4	DRY	No.2	SPF
J - G	2x4	DRY	No.2	SPF
ALL WEBS	2x3	DRY	No.2	SPF

DRY: SEASONED LUMBER.

PLATES (table is in inches)

JT	TYPE	PLATES	W	LEN	Y	X
B	TMB1-I	MT20	3.0	4.0		
C	TTWW+m	MT20	5.0	6.0	1.75	1.00
D	TMW+w	MT20	2.0	4.0		
E	TS-t	MT20	3.0	4.0		
F	TTWW+m	MT20	5.0	6.0	1.75	1.00
G	TMB1-I	MT20	3.0	4.0		
I	BMW1+w	MT20	2.0	4.0		
J	BS-t	MT20	3.0	4.0		
K	BMWWW1-t	MT20	4.0	9.0		
L	BMW1+w	MT20	2.0	4.0		

NOTE: Lateral brace(s) shown shall be 1x4 for Part 9 design as per OBC 9.23.13.11, and no less than 2x4 for Part 4 design

REGISTERED PROFESSIONAL ENGINEER
02/17/2018
EDWIN C. FOK
PROVINCE OF ONTARIO

DIMENSIONS, SUPPORTS AND LOADINGS SPECIFIED BY FABRICATOR TO BE VERIFIED BY BUILDING DESIGNER

BEARINGS

JT	FACTORED GROSS REACTION VERT	HORZ	MAXIMUM FACTORED GROSS REACTION DOWN	HORZ	UPLIFT	INPUT BRG IN-SX	REQRD BRG IN-SX
A	-62	0	0	0	-62	20-10-6 (4-0-02)0-4	
H	-62	0	0	0	-62	20-10-6 (4-0-02)0-4	
B	239	0	239	0	0	20-10-6 (4-0-02)0-4	
L	337	0	337	0	0	20-10-6 (4-0-02)0-4	
K	961	0	961	0	0	20-10-6 (4-0-02)0-4	
I	337	0	337	0	0	20-10-6 (4-0-02)0-4	
G	239	0	239	0	0	20-10-6 (4-0-02)0-4	

VALUE IN PARENTHESIS INDICATES EFFECTIVE BEARING LENGTH

BEVELED PLATE OR SHIM REQUIRED TO PROVIDE FULL BEARING SURFACE WITH TRUSS CHORD AT JT(S): A , H

PROVIDE ANCHORAGE AT BEARING JOINT A FOR 150 LBS FACTORED UPLIFT
PROVIDE ANCHORAGE AT BEARING JOINT H FOR 150 LBS FACTORED UPLIFT

UNFACTORED REACTIONS

JT	1ST LCASE COMBINED	MAX./MIN. COMPONENT REACTIONS SNOW	LIVE	PERM.LIVE	WIND	DEAD	SOIL
A	-43	0 / -35	0 / 0	0 / 0	0 / 0	0 / -8	0 / 0
H	-43	0 / -35	0 / 0	0 / 0	0 / 0	0 / -8	0 / 0
B	163	140 / 0	0 / 0	0 / 0	0 / 0	23 / 0	0 / 0
L	247	112 / 0	0 / 0	0 / 0	0 / 0	136 / 0	0 / 0
K	682	433 / 0	0 / 0	0 / 0	0 / 0	250 / 0	0 / 0
I	247	112 / 0	0 / 0	0 / 0	0 / 0	136 / 0	0 / 0
G	163	140 / 0	0 / 0	0 / 0	0 / 0	23 / 0	0 / 0

BEARING MATERIAL TO BE SPF NO.2 OR BETTER AT JOINT(S) A, H, B, L, K, I, G

BRACING

TOP CHORD TO BE SHEATHED OR MAX. PURLIN SPACING = 6.25 FT.
MAX. UNBRACED BOTTOM CHORD LENGTH = 10.00 FT OR RIGID CEILING DIRECTLY APPLIED.

ALL PITCH BREAKS AND PERIMETER CORNER JOINTS MUST BE LATERALLY RESTRAINED.

1 LATERAL BRACE(S) AT 1/ 2 LENGTH OF C-K, F-K.

LOADING

TOTAL LOAD CASES: (4)

CHORDS

MEMB. FR-TO	MAX. FACTORED FORCE (LBS)	FACTORED VERT. LOAD LC1 (PLF) FROM	TO	MAX CSI (LC)	MAX. UNBRAC LENGTH
A- B	0 / 56	-96.5	-96.5	0.05 (1)	10.00
B- C	-114 / 0	-78.0	-78.0	0.04 (1)	6.25
C- D	-38 / 0	-78.0	-78.0	0.89 (1)	6.25
D- E	-40 / 0	-78.0	-78.0	0.89 (1)	6.25
E- F	-40 / 0	-78.0	-78.0	0.89 (1)	6.25
F- G	-114 / 0	-78.0	-78.0	0.04 (1)	6.25
G- H	0 / 56	-96.5	-96.5	0.05 (1)	10.00
B- L	0 / 58	-18.5	-18.5	0.19 (4)	10.00
L- K	0 / 49	-18.5	-18.5	0.26 (4)	10.00
K- J	0 / 49	-18.5	-18.5	0.26 (4)	10.00
J- I	0 / 49	-18.5	-18.5	0.26 (4)	10.00
I- G	0 / 58	-18.5	-18.5	0.19 (4)	10.00

WEBS

MEMB. FR-TO	MAX. FACTORED FORCE (LBS)	MAX CSI (LC)
L- C	-208 / 0	0.04 (1)
C- K	-11 / 0	0.01 (1)
K- D	-797 / 0	0.14 (1)
K- F	-11 / 0	0.01 (1)
I- F	-208 / 0	0.04 (1)

[M]

DESIGN CRITERIA

SPECIFIED LOADS:

TOP CH.	LL	=	21.0	PSF
	DL	=	6.0	PSF
BOT CH.	LL	=	0.0	PSF
	DL	=	7.4	PSF
TOTAL LOAD		=	34.4	PSF

SPACING = 24.0 IN. C/C

LOADING IN FLAT SECTION BASED ON A SLOPE OF 2.00/12 MINIMUM

THIS TRUSS IS DESIGNED FOR RESIDENTIAL OR SMALL BUILDING REQUIREMENTS OF PART 9, NBCC 2010, NBCC 2015

THIS DESIGN COMPLIES WITH:
- PART 9 OF OBC 2012, OBC 2018
- CSA 086-09, CSA 086-14
- TPIC 2011, TPIC 2014

(55 % OF 23.0 P.S.F. G.S.L. PLUS 8.4 P.S.F. RAIN LOAD) EQUALS 21.0 P.S.F. SPECIFIED ROOF LIVE LOAD

CSI: TC=0.89/1.00 (D-F:1) , BC=0.26/1.00 (K-L:4) , WB=0.14/1.00 (D-K:1) , SSI=0.31/1.00 (C-D:1)

DOL LUMBER=1.00 NAIL=1.00 LS BEND=1.10 COMP=1.10 SHEAR=1.10 TENS= 1.10

COMPANION LIVE LOAD FACTOR = 1.00

TRUSS PLATE MANUFACTURER IS NOT RESPONSIBLE FOR QUALITY CONTROL IN THE TRUSS MANUFACTURING PLANT .

NAIL VALUES

PLATE	GRIP(DRY) (PSI) MAX	MIN	SHEAR (PLI) MAX	MIN	SECTION (PLI) MAX	MIN
MT20	618	354	1667	788	1987	1656

PLATE PLACEMENT TOL. = 0.250 inches

PLATE ROTATION TOL. = 5.0 Deg.

JSI GRIP= 0.65 (E) (INPUT = 0.90)
JSI METAL= 0.33 (E) (INPUT = 1.00)

A-18023538

JOB NAME	TRUSS NAME	QUANTITY	PLY	JOB DESC.	DRWG NO.
292597	H19P	2	1	TRUSS DESC.	

Alpa Roof Truss, Maple

Version 8.200 S Jan 6 2018 MiTek Industries, Inc. Sat Feb 17 14:31:11 2018 Page 1
ID:MF8liriaTok7DlbpT4B71Xys4PG-9M2M_YA0ZQ5eyiqshxkFSTGlHWJPF5o60t1nWozkDQ_

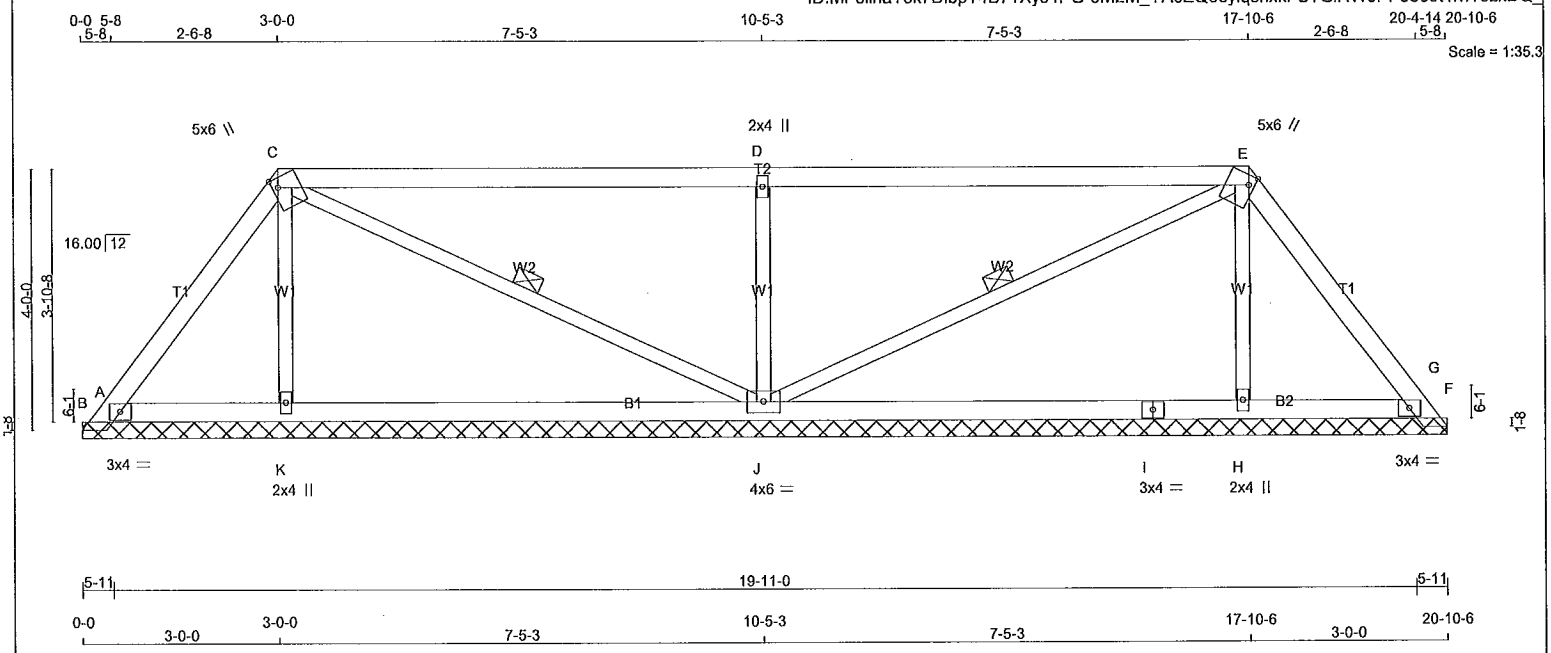

TOTAL WEIGHT = 2 X 72 = 144 lb

LUMBER
N. L. G. A. RULES

CHORDS	SIZE		LUMBER	DESCR.
A - C	2x4	DRY	No.2	SPF
C - E	2x4	DRY	No.2	SPF
E - G	2x4	DRY	No.2	SPF
B - I	2x4	DRY	No.2	SPF
I - F	2x4	DRY	No.2	SPF
ALL WEBS	2x3	DRY	No.2	SPF

DRY: SEASONED LUMBER.

PLATES (table is in inches)

JT	TYPE	PLATES	W	LEN	Y	X
B	TMB1-I	MT20	3.0	4.0		
C	TTWW+m	MT20	5.0	6.0	1.75	1.00
D	TMW+w	MT20	2.0	4.0		
E	TTWW+m	MT20	5.0	6.0	1.75	1.00
F	TMB1-I	MT20	3.0	4.0		
H	BMW1+w	MT20	2.0	4.0		
I	BS-t	MT20	3.0	4.0		
J	BMWWW1-t	MT20	4.0	6.0		
K	BMW1+w	MT20	2.0	4.0		

NOTE: Lateral brace(s) shown shall be 1x4 for Part 9 design as per OBC 9.23.13.11, and no less than 2x4 for Part 4 design

REGISTERED PROFESSIONAL ENGINEER
02/17/2018
EDWIN C. FOK
PROVINCE OF ONTARIO

DIMENSIONS, SUPPORTS AND LOADINGS SPECIFIED BY FABRICATOR TO BE VERIFIED BY BUILDING DESIGNER

BEARINGS

JT	FACTORED GROSS REACTION VERT	HORZ	MAXIMUM FACTORED GROSS REACTION DOWN	HORZ	UPLIFT	INPUT BRG IN-SX	REQRD BRG IN-SX
A	-144	0	0	0	-144	20-10-6 (4-0-0)	10-7
G	-144	0	0	0	-144	20-10-6 (4-0-0)	10-7
B	375	0	375	0	0	20-10-6 (4-0-0)	10-7
K	312	0	312	0	0	20-10-6 (4-0-0)	10-7
J	904	0	904	0	0	20-10-6 (4-0-0)	10-7
H	312	0	312	0	0	20-10-6 (4-0-0)	10-7
F	375	0	375	0	0	20-10-6 (4-0-0)	10-7

VALUE IN PARENTHESIS INDICATES EFFECTIVE BEARING LENGTH

BEVELED PLATE OR SHIM REQUIRED TO PROVIDE FULL BEARING SURFACE WITH TRUSS CHORD AT JT(S): A , G

PROVIDE ANCHORAGE AT BEARING JOINT A FOR 150 LBS FACTORED UPLIFT
PROVIDE ANCHORAGE AT BEARING JOINT G FOR 150 LBS FACTORED UPLIFT

UNFACTORED REACTIONS

JT	1ST LCASE COMBINED	MAX./MIN. COMPONENT REACTIONS SNOW	LIVE	PERM.LIVE	WIND	DEAD	SOIL
A	-99	0 / -79	0 / 0	0 / 0	0 / 0	0 / -20	0 / 0
G	-99	0 / -79	0 / 0	0 / 0	0 / 0	0 / -20	0 / 0
B	260	199 / 0	0 / 0	0 / 0	0 / 0	61 / 0	0 / 0
K	228	108 / 0	0 / 0	0 / 0	0 / 0	120 / 0	0 / 0
J	641	409 / 0	0 / 0	0 / 0	0 / 0	232 / 0	0 / 0
H	228	108 / 0	0 / 0	0 / 0	0 / 0	120 / 0	0 / 0
F	260	199 / 0	0 / 0	0 / 0	0 / 0	61 / 0	0 / 0

BEARING MATERIAL TO BE SPF NO.2 OR BETTER AT JOINT(S) A, G, B, K, J, H, F

BRACING
TOP CHORD TO BE SHEATHED OR MAX. PURLIN SPACING = 6.25 FT.
MAX. UNBRACED BOTTOM CHORD LENGTH = 10.00 FT OR RIGID CEILING DIRECTLY APPLIED.

ALL PITCH BREAKS AND PERIMETER CORNER JOINTS MUST BE LATERALLY RESTRAINED.

1 LATERAL BRACE(S) AT 1/ 2 LENGTH OF C-J, E-J.

LOADING
TOTAL LOAD CASES: (4)

CHORDS

MEMB. FR-TO	MAX. FACTORED FORCE (LBS)	FACTORED VERT. LOAD LC1 (PLF) FROM	TO	MAX CSI (LC)	MAX. UNBRAC LENGTH
A- B	0 / 113	-96.5	-96.5	0.10 (1)	10.00
B- C	-111 / 0	-78.0	-78.0	0.08 (1)	6.25
C- D	-10 / 0	-78.0	-78.0	0.73 (1)	6.25
D- E	-10 / 0	-78.0	-78.0	0.73 (1)	6.25
E- F	-111 / 0	-78.0	-78.0	0.08 (1)	6.25
F- G	0 / 113	-96.5	-96.5	0.10 (1)	10.00
B- K	0 / 54	-18.5	-18.5	0.15 (4)	10.00
K- J	0 / 48	-18.5	-18.5	0.22 (4)	10.00
J- I	0 / 48	-18.5	-18.5	0.22 (4)	10.00
I- H	0 / 48	-18.5	-18.5	0.22 (4)	10.00
H- F	0 / 54	-18.5	-18.5	0.15 (4)	10.00

WEBS

MEMB. FR-TO	MAX. FACTORED FORCE (LBS)	MAX CSI (LC)
K- C	-201 / 0	0.05 (1)
C- J	-41 / 0	0.02 (1)
J- D	-724 / 0	0.17 (1)
J- E	-41 / 0	0.02 (1)
H- E	-201 / 0	0.05 (1)

[M]

DESIGN CRITERIA

SPECIFIED LOADS:

TOP CH.	LL	=	21.0	PSF
	DL	=	6.0	PSF
BOT CH.	LL	=	0.0	PSF
	DL	=	7.4	PSF
TOTAL LOAD		=	34.4	PSF

SPACING = 24.0 IN. C/C

LOADING IN FLAT SECTION BASED ON A SLOPE OF 2.00/12 MINIMUM

THIS TRUSS IS DESIGNED FOR RESIDENTIAL OR SMALL BUILDING REQUIREMENTS OF PART 9, NBCC 2010, NBCC 2015

THIS DESIGN COMPLIES WITH:
- PART 9 OF OBC 2012, OBC 2018
- CSA 086-09, CSA 086-14
- TPIC 2011, TPIC 2014

(55 % OF 23.0 P.S.F. G.S.L. PLUS 8.4 P.S.F. RAIN LOAD) EQUALS 21.0 P.S.F. SPECIFIED ROOF LIVE LOAD

CSI: TC=0.73/1.00 (D-E:1) , BC=0.22/1.00 (H-J:4) , WB=0.17/1.00 (D-J:1) , SSI=0.28/1.00 (C-D:1)

DOL LUMBER=1.00 NAIL=1.00 LS BEND=1.10 COMP=1.10 SHEAR=1.10 TENS= 1.10

COMPANION LIVE LOAD FACTOR = 1.00

TRUSS PLATE MANUFACTURER IS NOT RESPONSIBLE FOR QUALITY CONTROL IN THE TRUSS MANUFACTURING PLANT .

NAIL VALUES

PLATE	GRIP(DRY) (PSI) MAX	MIN	SHEAR (PLI) MAX	MIN	SECTION (PLI) MAX	MIN
MT20	618	354	1667	788	1987	1656

PLATE PLACEMENT TOL. = 0.250 inches

PLATE ROTATION TOL. = 5.0 Deg.

JSI GRIP= 0.76 (J) (INPUT = 0.90)
JSI METAL= 0.15 (D) (INPUT = 1.00)

A-18023539

JOB NAME	TRUSS NAME	QUANTITY	PLY	JOB DESC.	DRWG NO.
292597	H20P	1	1	TRUSS DESC.	

Alpa Roof Truss, Maple

Version 8.200 S Jan 6 2018 MiTek Industries, Inc. Sat Feb 17 14:31:16 2018 Page 1
ID:MF8liriaTok7DlbpT4B71Xys4PG-WJrF1FE8Nyjw3UiqUUKQ9WzZcX?hwMdrA9kYB0zkDPv

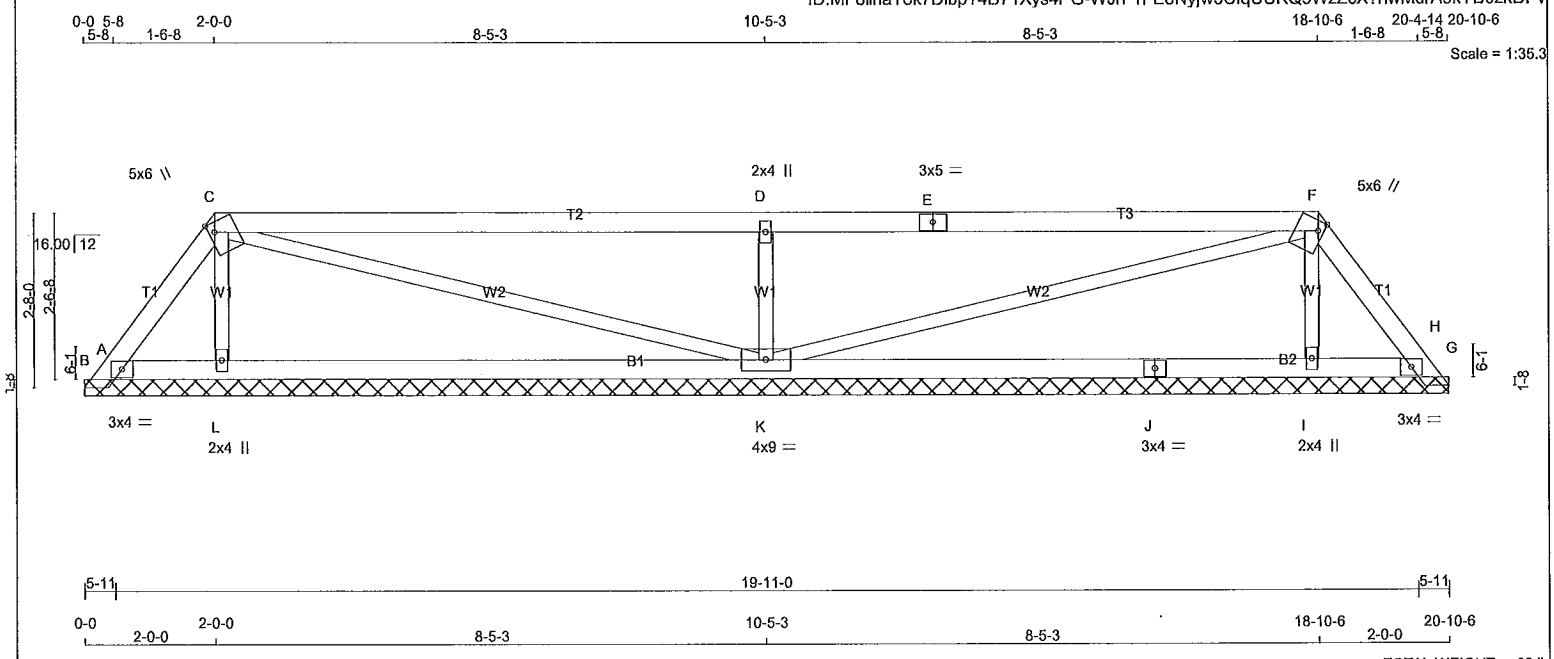

TOTAL WEIGHT = 68 lb

LUMBER
N. L. G. A. RULES

CHORDS	SIZE		LUMBER	DESCR.
A - C	2x4	DRY	No.2	SPF
C - E	2x4	DRY	No.2	SPF
E - F	2x4	DRY	No.2	SPF
F - H	2x4	DRY	No.2	SPF
B - J	2x4	DRY	No.2	SPF
J - G	2x4	DRY	No.2	SPF
ALL WEBS	2x3	DRY	No.2	SPF

DRY: SEASONED LUMBER.

PLATES (table is in inches)

JT	TYPE	PLATES	W	LEN	Y	X
B	TMB1-I	MT20	3.0	4.0		
C	TTWW+m	MT20	5.0	6.0	1.75	1.00
D	TMW+w	MT20	2.0	4.0		
E	TS-t	MT20	3.0	5.0		
F	TTWW+m	MT20	5.0	6.0	1.75	1.00
G	TMB1-I	MT20	3.0	4.0		
I	BMW1+w	MT20	2.0	4.0		
J	BS-t	MT20	3.0	4.0		
K	BMWWW1-t	MT20	4.0	9.0		
L	BMW1+w	MT20	2.0	4.0		

NOTE: Lateral brace(s) shown shall be 1x4 for Part 9 design as per OBC 9.23.13.11, and no less than 2x4 for Part 4 design

REGISTERED PROFESSIONAL ENGINEER
02/17/2018
EDWIN C. FOK
PROVINCE OF ONTARIO

DIMENSIONS, SUPPORTS AND LOADINGS SPECIFIED BY FABRICATOR TO BE VERIFIED BY BUILDING DESIGNER

BEARINGS

JT	FACTORED GROSS REACTION VERT	HORZ	MAXIMUM FACTORED GROSS REACTION DOWN	HORZ	UPLIFT	INPUT BRG IN-SX	REQRD BRG IN-SX
A	-42	0	0	0	-42	20-10-6 (4-0-0)0-12	
H	-42	0	0	0	-42	20-10-6 (4-0-0)0-12	
B	203	0	203	0	0	20-10-6 (4-0-0)0-12	
L	344	0	344	0	0	20-10-6 (4-0-0)0-12	
K	979	0	979	0	0	20-10-6 (4-0-0)0-12	
I	344	0	344	0	0	20-10-6 (4-0-0)0-12	
G	203	0	203	0	0	20-10-6 (4-0-0)0-12	

VALUE IN PARENTHESIS INDICATES EFFECTIVE BEARING LENGTH

BEVELED PLATE OR SHIM REQUIRED TO PROVIDE FULL BEARING SURFACE WITH TRUSS CHORD AT JT(S): A , H

PROVIDE ANCHORAGE AT BEARING JOINT A FOR 150 LBS FACTORED UPLIFT
PROVIDE ANCHORAGE AT BEARING JOINT H FOR 150 LBS FACTORED UPLIFT

UNFACTORED REACTIONS

JT	1ST LCASE COMBINED	MAX./MIN. COMPONENT REACTIONS SNOW	LIVE	PERM.LIVE	WIND	DEAD	SOIL
A	-29	0 / -24	0 / 0	0 / 0	0 / 0	0 / -4	0 / 0
H	-29	0 / -24	0 / 0	0 / 0	0 / 0	0 / -4	0 / 0
B	137	128 / 0	0 / 0	0 / 0	0 / 0	9 / 0	0 / 0
L	253	109 / 0	0 / 0	0 / 0	0 / 0	144 / 0	0 / 0
K	695	440 / 0	0 / 0	0 / 0	0 / 0	255 / 0	0 / 0
I	253	109 / 0	0 / 0	0 / 0	0 / 0	144 / 0	0 / 0
G	137	128 / 0	0 / 0	0 / 0	0 / 0	9 / 0	0 / 0

BEARING MATERIAL TO BE SPF NO.2 OR BETTER AT JOINT(S) A, H, B, L, K, I, G

BRACING
TOP CHORD TO BE SHEATHED OR MAX. PURLIN SPACING = 6.25 FT.
MAX. UNBRACED BOTTOM CHORD LENGTH = 10.00 FT OR RIGID CEILING DIRECTLY APPLIED.

ALL PITCH BREAKS AND PERIMETER CORNER JOINTS MUST BE LATERALLY RESTRAINED.

LOADING
TOTAL LOAD CASES: (4)

CHORDS

MEMB. FR-TO	MAX. FORCE (LBS)	FACTORED VERT. LOAD (PLF) FROM	TO	LC1	MAX CSI (LC)	MAX. UNBRAC LENGTH
A- B	0 / 41	-96.5	-96.5	0.03 (1)	10.00	
B- C	-123 / 0	-78.0	-78.0	0.03 (1)	6.25	
C- D	-60 / 0	-78.0	-78.0	0.95 (1)	6.25	
D- E	-61 / 0	-78.0	-78.0	0.95 (1)	6.25	
E- F	-61 / 0	-78.0	-78.0	0.95 (1)	6.25	
F- G	-123 / 0	-78.0	-78.0	0.03 (1)	6.25	
G- H	0 / 41	-96.5	-96.5	0.03 (1)	10.00	
B- L	0 / 64	-18.5	-18.5	0.21 (4)	10.00	
L- K	0 / 54	-18.5	-18.5	0.28 (4)	10.00	
K- J	0 / 54	-18.5	-18.5	0.28 (4)	10.00	
J- I	0 / 54	-18.5	-18.5	0.28 (4)	10.00	
I- G	0 / 64	-18.5	-18.5	0.21 (4)	10.00	

WEBS

MEMB. FR-TO	MAX. FORCE (LBS)	MAX CSI (LC)
L- C	-203 / 0	0.03 (1)
C- K	0 / 7	0.00 (1)
K- D	-821 / 0	0.13 (1)
K- F	0 / 7	0.00 (1)
I- F	-203 / 0	0.03 (1)

DESIGN CRITERIA

SPECIFIED LOADS:

TOP CH.	LL	=	21.0	PSF
	DL	=	6.0	PSF
BOT CH.	LL	=	0.0	PSF
	DL	=	7.4	PSF
TOTAL LOAD		=	34.4	PSF

SPACING = 24.0 IN. C/C

LOADING IN FLAT SECTION BASED ON A SLOPE OF 2.00/12 MINIMUM

THIS TRUSS IS DESIGNED FOR RESIDENTIAL OR SMALL BUILDING REQUIREMENTS OF PART 9, NBCC 2010, NBCC 2015

THIS DESIGN COMPLIES WITH:
- PART 9 OF OBC 2012, OBC 2018
- CSA 086-09, CSA 086-14
- TPIC 2011, TPIC 2014

(55 % OF 23.0 P.S.F. G.S.L. PLUS 8.4 P.S.F. RAIN LOAD) EQUALS 21.0 P.S.F. SPECIFIED ROOF LIVE LOAD

CSI: TC=0.95/1.00 (D-F:1) , BC=0.28/1.00 (K-L:4) , WB=0.13/1.00 (D-K:1) , SSI=0.32/1.00 (C-D:1)

DOL LUMBER=1.00 NAIL=1.00 LS BEND=1.10 COMP=1.10 SHEAR=1.10 TENS= 1.10

COMPANION LIVE LOAD FACTOR = 1.00

TRUSS PLATE MANUFACTURER IS NOT RESPONSIBLE FOR QUALITY CONTROL IN THE TRUSS MANUFACTURING PLANT .

NAIL VALUES

PLATE	GRIP(DRY) (PSI) MAX	MIN	SHEAR (PLI) MAX	MIN	SECTION (PLI) MAX	MIN
MT20	618	354	1667	788	1987	1656

PLATE PLACEMENT TOL. = 0.250 inches

PLATE ROTATION TOL. = 5.0 Deg.

JSI GRIP= 0.80 (E) (INPUT = 0.90)
JSI METAL= 0.27 (E) (INPUT = 1.00)

A-18023540

JOB NAME	TRUSS NAME	QUANTITY	PLY	JOB DESC.	DRWG NO.
292597	H22S	2	1	TRUSS DESC.	

Alpa Roof Truss, Maple

Version 8.200 S Jan 6 2018 MiTek Industries, Inc. Sat Feb 17 14:32:43 2018 Page 1
ID:MF8iiriaTok7DlbpT4B71Xys4PG-T2c8H?Hjuhha?rsY4GOpBs4TfbfCpjBfACJfkTzkDOY

Scale = 1:59.1

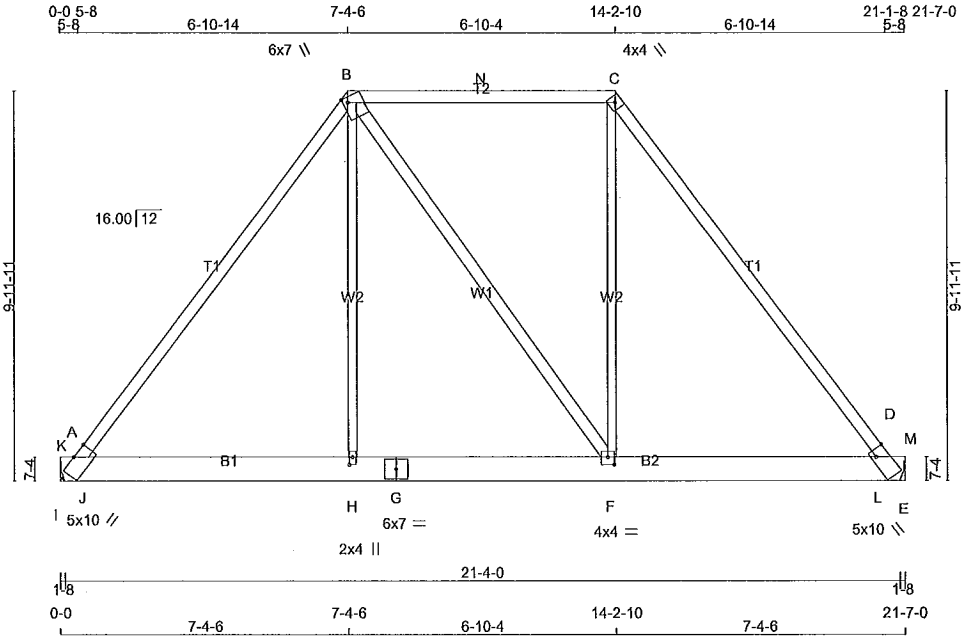

TOTAL WEIGHT = 2 X 113 = 226 lb

[M]

LUMBER

N. L. G. A. RULES

CHORDS	SIZE		LUMBER	DESCR.
A - B	2x4	DRY	No.2	SPF
B - C	2x4	DRY	2100F 1.8E	SPF
C - D	2x4	DRY	No.2	SPF
I - G	2x8	DRY	No.2	SPF
G - E	2x8	DRY	No.2	SPF
ALL WEBS EXCEPT	2x3	DRY	No.2	SPF
B - F	2x4	DRY	No.2	SPF

DRY: SEASONED LUMBER.

PLATES (table Is In inches)

JT	TYPE	PLATES	W	LEN	Y	X
A	TBM-h	MT20	5.0	10.0		4.75
B	TTWW+m	MT20	6.0	7.0	Edge	1.50
C	TTW-h	MT20	4.0	4.0		
D	TBM-h	MT20	5.0	10.0	Edge	2.25
F	BMWW-t	MT20	4.0	4.0	2.25	2.00
G	BS-t	MT20	6.0	7.0		
H	BMW+w	MT20	2.0	4.0	2.25	1.00

Edge - INDICATES REFERENCE CORNER OF PLATE TOUCHES EDGE OF CHORD.

NOTE: Lateral brace(s) shown shall be 1x4 for Part 9 design as per OBC 9.23.13.11, and no less than 2x4 for Part 4 design

REGISTERED PROFESSIONAL ENGINEER
02/17/2018
EDWIN C. FOK
PROVINCE OF ONTARIO

DIMENSIONS, SUPPORTS AND LOADINGS SPECIFIED BY FABRICATOR TO BE VERIFIED BY BUILDING DESIGNER

BEARINGS

JT	FACTORED GROSS REACTION VERT	HORZ	MAXIMUM FACTORED GROSS REACTION DOWN	HORZ	UPLIFT	INPUT BRG IN-SX	REQRD BRG IN-SX
I	1067	0	1067	0	0	HANGER BY OTHERS MIN. SEAT SIZE: 1-8	
E	1067	0	1067	0	0	HANGER BY OTHERS MIN. SEAT SIZE: 1-8	

UNFACTORED REACTIONS

JT	1ST LCASE COMBINED	MAX./MIN. COMPONENT REACTIONS SNOW	LIVE	PERM.LIVE	WIND	DEAD	SOIL
I	763	453 / 0	0 / 0	0 / 0	0 / 0	310 / 0	0 / 0
E	763	453 / 0	0 / 0	0 / 0	0 / 0	310 / 0	0 / 0

BRACING

FOR SECTION B-C, MAX. PURLIN SPACING = 2.00 FT.
FOR OTHER SECTIONS, TOP CHORD TO BE SHEATHED OR MAX. PURLIN SPACING = 5.38 FT.
MAX. UNBRACED BOTTOM CHORD LENGTH = 10.00 FT OR RIGID CEILING DIRECTLY APPLIED.

ALL PITCH BREAKS AND PERIMETER CORNER JOINTS MUST BE LATERALLY RESTRAINED.

LOADING

TOTAL LOAD CASES: (4)

CHORDS

MEMB. FR-TO	MAX. FACTORED FORCE (LBS)	FACTORED VERT. LOAD LC1 (PLF) FROM	TO	MAX CSI (LC)	MAX. UNBRAC LENGTH
A- K	-229 / 67	-78.0	-78.0	0.51 (1)	6.25
K- B	-1002 / 0	-78.0	-78.0	0.75 (1)	5.40
B- N	-578 / 0	-85.5	-85.5	0.47 (1)	2.00
N- C	-578 / 0	-85.5	-85.5	0.47 (1)	2.00
C- M	-1005 / 0	-78.0	-78.0	0.76 (1)	5.38
M- D	-230 / 65	-78.0	-78.0	0.51 (1)	6.25
I- A	0 / 0	-96.5	-96.5	0.16 (1)	10.00
A- J	0 / 573	-18.5	-18.5	0.40 (1)	10.00
J- H	0 / 573	-18.5	-18.5	0.40 (1)	10.00
H- G	0 / 576	-18.5	-18.5	0.16 (1)	10.00
G- F	0 / 576	-18.5	-18.5	0.16 (1)	10.00
F- L	0 / 575	-18.5	-18.5	0.40 (1)	10.00
L- D	0 / 575	-18.5	-18.5	0.40 (1)	10.00
D- E	0 / 0	-96.5	-96.5	0.16 (1)	10.00

WEBS

MEMB. FR-TO	MAX. FACTORED FORCE (LBS)	MAX CSI (LC)
H- B	0 / 264	0.07 (4)
B- F	0 / 3	0.00 (4)
F- C	0 / 269	0.07 (4)
J- K	-1545 / 0	0.00 (1)
L- M	-1547 / 0	0.00 (1)

DESIGN CRITERIA

SPECIFIED LOADS:

TOP CH.	LL	=	21.0	PSF
	DL	=	6.0	PSF
BOT CH.	LL	=	0.0	PSF
	DL	=	7.4	PSF
TOTAL LOAD		=	34.4	PSF

SPACING = 24.0 IN. C/C

LOADING IN FLAT SECTION BASED ON PIGGYBACK TRUSS WITH SLOPES OF 6.00/12 AND -6.00/12 AND RESPECTIVE WALL HEIGHTS OF 0-0 AND 0-0 AND AN ADDITIONAL DEAD LOAD OF 3.0 P.S.F.

THIS TRUSS IS DESIGNED FOR RESIDENTIAL OR SMALL BUILDING REQUIREMENTS OF PART 9, NBCC 2010, NBCC 2015

THIS DESIGN COMPLIES WITH:
- PART 9 OF OBC 2012, OBC 2018
- CSA 086-09, CSA 086-14
- TPIC 2011, TPIC 2014

(55 % OF 23.0 P.S.F. G.S.L. PLUS 8.4 P.S.F. RAIN LOAD) EQUALS 21.0 P.S.F. SPECIFIED ROOF LIVE LOAD

ALLOWABLE DEFL.(LL)= L/360 (0.72")
CALCULATED VERT. DEFL.(LL) = L/ 999 (0.04")
ALLOWABLE DEFL.(TL)= L/360 (0.72")
CALCULATED VERT. DEFL.(TL) = L/ 999 (0.08")

CSI: TC=0.76/1.00 (C-M:1) , BC=0.40/1.00 (F-L:1) , WB=0.07/1.00 (C-F:4) , SSI=0.79/1.00 (A-J:1)

DOL LUMBER=1.00 NAIL=1.00 LS BEND=1.10 COMP=1.10 SHEAR=1.10 TENS= 1.10

COMPANION LIVE LOAD FACTOR = 1.00

TRUSS PLATE MANUFACTURER IS NOT RESPONSIBLE FOR QUALITY CONTROL IN THE TRUSS MANUFACTURING PLANT .

NAIL VALUES

PLATE	GRIP(DRY) (PSI) MAX	MIN	SHEAR (PLI) MAX	MIN	SECTION (PLI) MAX	MIN
MT20	618	354	1667	788	1987	1656

PLATE PLACEMENT TOL. = 0.250 Inches

PLATE ROTATION TOL. = 5.0 Deg.

JSI GRIP= 0.70 (C) (INPUT = 0.90)
JSI METAL= 0.24 (C) (INPUT = 1.00)

A-18023541

JOB NAME	TRUSS NAME	QUANTITY	PLY	JOB DESC.	DRWG NO.
292597	H22T	2	1	TRUSS DESC.	

Alpa Roof Truss, Maple

Version 8.200 S Jan 6 2018 MiTek Industries, Inc. Sat Feb 17 14:33:21 2018 Page 1

ID:MF8iiriaTok7DlbpT4B71Xys4PG-LMvVG?IZxMTBYhmrIF4kjtfyowd1jphFv6Wf3GzkDNy

Scale = 1:66.3

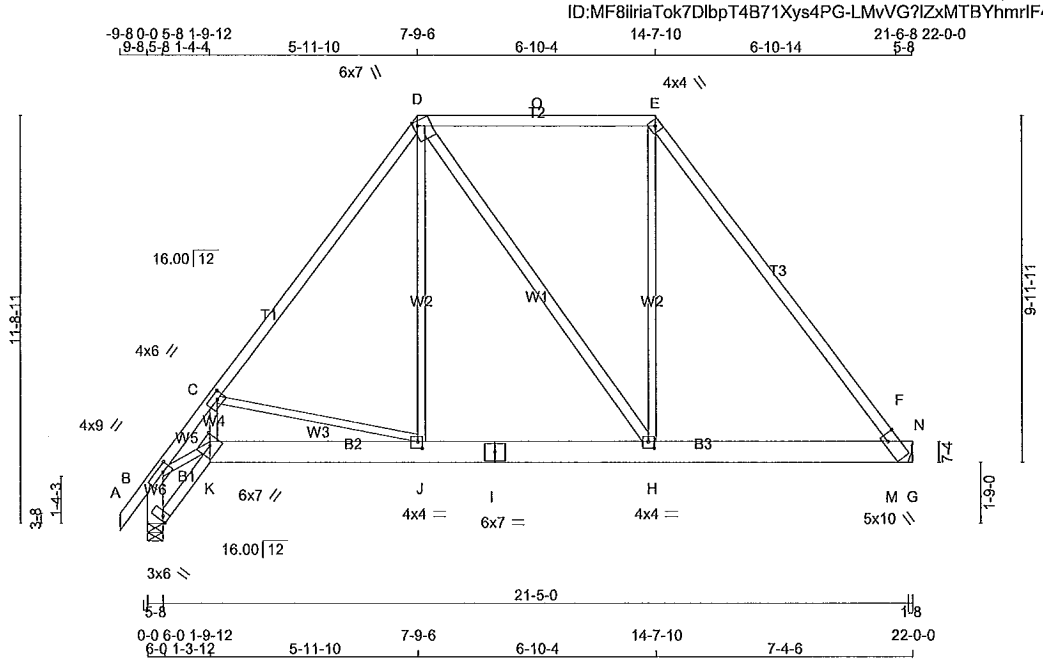

TOTAL WEIGHT = 2 X 126 = 252 lb

[M]

LUMBER

N. L. G. A. RULES

CHORDS	SIZE		LUMBER	DESCR.
A - D	2x4	DRY	No.2	SPF
D - E	2x4	DRY	2100F 1.8E	SPF
E - F	2x4	DRY	No.2	SPF
L - B	2x6	DRY	No.2	SPF
L - K	2x4	DRY	No.2	SPF
K - I	2x8	DRY	No.2	SPF
I - G	2x8	DRY	No.2	SPF
ALL WEBS EXCEPT	2x3	DRY	No.2	SPF
D - H	2x4	DRY	No.2	SPF

DRY: SEASONED LUMBER.

PLATES (table is in inches)

JT	TYPE	PLATES	W	LEN	Y	X
B	TMVW-t	MT20	4.0	9.0	2.00	3.00
C	TMWW-t	MT20	4.0	6.0	2.00	2.50
D	TTWW+m	MT20	6.0	7.0	Edge	1.50
E	TTW-h	MT20	4.0	4.0		
F	TBM-h	MT20	5.0	10.0	Edge	2.50
H	BMWW-t	MT20	4.0	4.0	2.25	2.00
I	BS-t	MT20	6.0	7.0		
J	BMWW-t	MT20	4.0	4.0	2.25	1.50
K	BBWW-h	MT20	6.0	7.0	3.00	3.25
L	BVM1+I	MT20	3.0	6.0	Edge	

Edge - INDICATES REFERENCE CORNER OF PLATE TOUCHES EDGE OF CHORD.

NOTE: Lateral brace(s) shown shall be 1x4 for Part 9 design as per OBC 9.23.13.11, and no less than 2x4 for Part 4 design

REGISTERED PROFESSIONAL ENGINEER
02/17/2018
EDWIN C. FOK
PROVINCE OF ONTARIO

DIMENSIONS, SUPPORTS AND LOADINGS SPECIFIED BY FABRICATOR TO BE VERIFIED BY BUILDING DESIGNER

BEARINGS

JT	FACTORED GROSS REACTION VERT	HORZ	MAXIMUM FACTORED GROSS REACTION DOWN	HORZ	UPLIFT	INPUT BRG IN-SX	REQRD BRG IN-SX
L	1157	0	1157	0	0	5-8	1-8
G	1087	0	1087	0	0	HANGER BY OTHERS	
						MIN. SEAT SIZE: 1-8	

UNFACTORED REACTIONS

JT	1ST LCASE COMBINED	MAX./MIN. COMPONENT REACTIONS SNOW	LIVE	PERM.LIVE	WIND	DEAD	SOIL
L	826	500 / 0	0 / 0	0 / 0	0 / 0	326 / 0	0 / 0
G	778	462 / 0	0 / 0	0 / 0	0 / 0	316 / 0	0 / 0

BEARING MATERIAL TO BE SPF NO.2 OR BETTER AT JOINT(S) L

BEARING SIZE FACTOR = 1.15 AT JNT(S) L (BASED ON SUPPORT DEPTH = 1-8)

BRACING

FOR SECTION D-E, MAX. PURLIN SPACING = 2.00 FT.

FOR OTHER SECTIONS, TOP CHORD TO BE SHEATHED OR MAX. PURLIN SPACING = 4.20 FT.

MAX. UNBRACED BOTTOM CHORD LENGTH = 10.00 FT OR RIGID CEILING DIRECTLY APPLIED.

ALL PITCH BREAKS AND PERIMETER CORNER JOINTS MUST BE LATERALLY RESTRAINED.

LOADING

TOTAL LOAD CASES: (4)

CHORDS

MEMB. FR-TO	MAX. FACTORED FORCE (LBS)	VERT. LOAD (PLF) FROM	TO	LC1 MAX CSI (LC)	MAX. UNBRAC LENGTH
A- B	0 / 28	-78.0	-78.0	0.05 (1)	10.00
B- C	-2152 / 0	-78.0	-78.0	0.38 (1)	4.20
C- D	-1003 / 0	-78.0	-78.0	0.45 (1)	5.76
D- O	-600 / 0	-85.5	-85.5	0.47 (1)	2.00
O- E	-600 / 0	-85.5	-85.5	0.47 (1)	2.00
E- N	-1041 / 0	-78.0	-78.0	0.77 (1)	5.31
N- F	-244 / 29	-78.0	-78.0	0.50 (1)	6.25
L- B	-1140 / 0	0.0	0.0	0.08 (1)	7.81
L- K	0 / 0	-18.5	-18.5	0.02 (4)	10.00
K- J	0 / 1303	-18.5	-18.5	0.17 (1)	10.00
J- I	0 / 583	-18.5	-18.5	0.18 (1)	10.00
I- H	0 / 583	-18.5	-18.5	0.18 (1)	10.00
H- M	0 / 596	-18.5	-18.5	0.40 (1)	10.00
M- F	0 / 596	-18.5	-18.5	0.40 (1)	10.00
F- G	0 / 0	-96.5	-96.5	0.16 (1)	10.00

WEBS

MEMB. FR-TO	MAX. FACTORED FORCE (LBS)	MAX CSI (LC)
K- C	0 / 753	0.17 (1)
C- J	-748 / 0	0.51 (1)
J- D	0 / 273	0.07 (4)
D- H	0 / 28	0.00 (1)
H- E	0 / 297	0.07 (4)
B- K	0 / 1513	0.34 (1)
M- N	-1548 / 0	0.00 (1)

DESIGN CRITERIA

SPECIFIED LOADS:

TOP CH.	LL	=	21.0	PSF
	DL	=	6.0	PSF
BOT CH.	LL	=	0.0	PSF
	DL	=	7.4	PSF
TOTAL LOAD		=	34.4	PSF

SPACING = 24.0 IN. C/C

LOADING IN FLAT SECTION BASED ON PIGGYBACK TRUSS WITH SLOPES OF 6.00/12 AND -6.00/12 AND RESPECTIVE WALL HEIGHTS OF 0-0 AND 0-0 AND AN ADDITIONAL DEAD LOAD OF 3.0 P.S.F.

THIS TRUSS IS DESIGNED FOR RESIDENTIAL OR SMALL BUILDING REQUIREMENTS OF PART 9, NBCC 2010, NBCC 2015

THIS DESIGN COMPLIES WITH:
- PART 9 OF OBC 2012, OBC 2018
- CSA 086-09, CSA 086-14
- TPIC 2011, TPIC 2014

(55 % OF 23.0 P.S.F. G.S.L. PLUS 8.4 P.S.F. RAIN LOAD) EQUALS 21.0 P.S.F. SPECIFIED ROOF LIVE LOAD

ALLOWABLE DEFL.(LL)= L/360 (0.73")
CALCULATED VERT. DEFL.(LL) = L/ 999 (0.04")
ALLOWABLE DEFL.(TL)= L/360 (0.73")
CALCULATED VERT. DEFL.(TL) = L/ 999 (0.08")

CSI: TC=0.77/1.00 (E-N:1) , BC=0.40/1.00 (H-M:1) , WB=0.51/1.00 (C-J:1) , SSI=0.78/1.00 (F-M:1)

DOL LUMBER=1.00 NAIL=1.00 LS BEND=1.10 COMP=1.10 SHEAR=1.10 TENS= 1.10

COMPANION LIVE LOAD FACTOR = 1.00

AUTOSOLVE RIGHT HEEL ONLY

TRUSS PLATE MANUFACTURER IS NOT RESPONSIBLE FOR QUALITY CONTROL IN THE TRUSS MANUFACTURING PLANT .

NAIL VALUES

PLATE	GRIP(DRY) (PSI) MAX	MIN	SHEAR (PLI) MAX	MIN	SECTION (PLI) MAX	MIN
MT20	618	354	1667	788	1987	1656

PLATE PLACEMENT TOL. = 0.250 inches

PLATE ROTATION TOL. = 5.0 Deg.

JSI GRIP= 0.84 (J) (INPUT = 0.90)
JSI METAL= 0.38 (B) (INPUT = 1.00)

A-18023542

JOB NAME	TRUSS NAME	QUANTITY	PLY	JOB DESC.	DRWG NO.
292597	H23P	4	1	TRUSS DESC.	

Alpa Roof Truss, Maple

Version 8.200 S Jan 6 2018 MiTek Industries, Inc. Sat Feb 17 14:33:30 2018 Page 1
ID:MF8liriaTok7DlbpT4B71Xys4PG-b5yv94sCq7cv74yaKekranWfpYocK_Qa_?CeuFzkDNp

Scale = 1:30.0

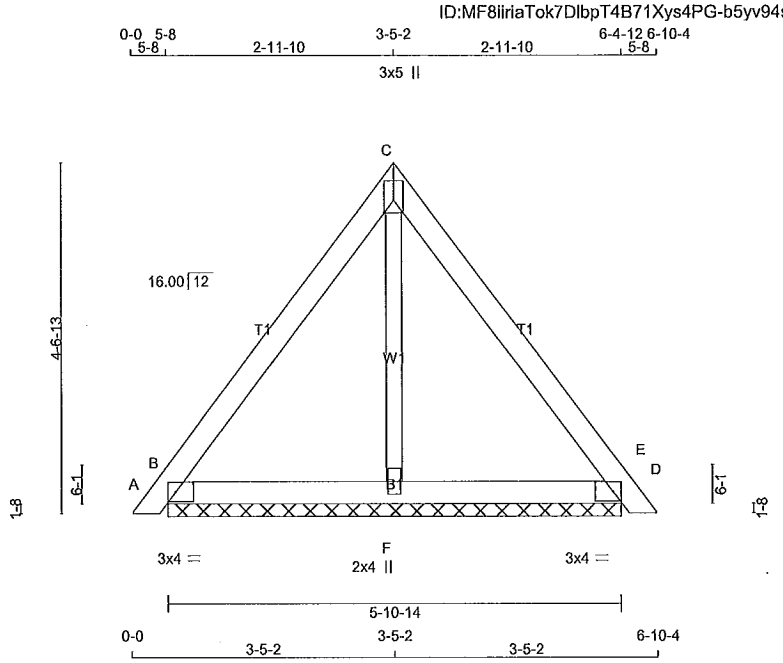

TOTAL WEIGHT = 4 X 23 = 91 lb

[M]

LUMBER
N. L. G. A. RULES

CHORDS	SIZE		LUMBER	DESCR.
A - C	2x4	DRY	No.2	SPF
C - E	2x4	DRY	No.2	SPF
B - D	2x4	DRY	No.2	SPF
ALL WEBS	2x3	DRY	No.2	SPF

DRY: SEASONED LUMBER.

PLATES (table is in inches)

JT	TYPE	PLATES	W	LEN	Y	X
B	TMB1-I	MT20	3.0	4.0	1.50	2.75
C	TTW+p	MT20	3.0	5.0	2.00	Edge
D	TMB1-I	MT20	3.0	4.0	1.50	2.75
F	BMW1+w	MT20	2.0	4.0		

Edge - INDICATES REFERENCE CORNER OF PLATE TOUCHES EDGE OF CHORD.

NOTE: Lateral brace(s) shown shall be 1x4 for Part 9 design as per OBC 9.23.13.11, and no less than 2x4 for Part 4 design

REGISTERED PROFESSIONAL ENGINEER
02/17/2018
EDWIN C. FOK
PROVINCE OF ONTARIO

DIMENSIONS, SUPPORTS AND LOADINGS SPECIFIED BY FABRICATOR TO BE VERIFIED BY BUILDING DESIGNER

BEARINGS

JT	FACTORED GROSS REACTION VERT	HORZ	MAXIMUM FACTORED GROSS REACTION DOWN	HORZ	UPLIFT	INPUT BRG IN-SX	REQRD BRG IN-SX
B	226	0	226	0	0	5-10-14	4-9
D	226	0	226	0	0	5-10-14	4-9
F	172	0	172	0	0	5-10-14	4-9

UNFACTORED REACTIONS

JT	1ST LCASE COMBINED	MAX./MIN. COMPONENT REACTIONS SNOW	LIVE	PERM.LIVE	WIND	DEAD	SOIL
B	159	111 / 0	0 / 0	0 / 0	0 / 0	48 / 0	0 / 0
D	159	111 / 0	0 / 0	0 / 0	0 / 0	48 / 0	0 / 0
F	126	56 / 0	0 / 0	0 / 0	0 / 0	71 / 0	0 / 0

BEARING MATERIAL TO BE SPF NO.2 OR BETTER AT JOINT(S) B, D, F

BRACING
TOP CHORD TO BE SHEATHED OR MAX. PURLIN SPACING = 6.25 FT.
MAX. UNBRACED BOTTOM CHORD LENGTH = 10.00 FT OR RIGID CEILING DIRECTLY APPLIED.

ALL PITCH BREAKS AND PERIMETER CORNER JOINTS MUST BE LATERALLY RESTRAINED.

LOADING
TOTAL LOAD CASES: (4)

CHORDS

MEMB. FR-TO	MAX. FORCE (LBS)	FACTORED VERT. LOAD LC1 (PLF) FROM	TO	MAX CSI (LC)	MAX. UNBRAC LENGTH
A- B	0 / 10	-78.0	-78.0	0.01 (1)	10.00
B- C	-79 / 0	-78.0	-78.0	0.12 (1)	6.25
C- D	-79 / 0	-78.0	-78.0	0.12 (1)	6.25
D- E	0 / 10	-78.0	-78.0	0.01 (1)	10.00
B- F	0 / 46	-18.5	-18.5	0.05 (4)	10.00
F- D	0 / 46	-18.5	-18.5	0.05 (4)	10.00

WEBS

MEMB. FR-TO	MAX. FACTORED FORCE (LBS)	MAX CSI (LC)
F- C	-103 / 0	0.03 (1)

DESIGN CRITERIA

SPECIFIED LOADS:

TOP CH.	LL	=	21.0	PSF
	DL	=	6.0	PSF
BOT CH.	LL	=	0.0	PSF
	DL	=	7.4	PSF
TOTAL LOAD		=	34.4	PSF

SPACING = 24.0 IN. C/C

THIS TRUSS IS DESIGNED FOR RESIDENTIAL OR SMALL BUILDING REQUIREMENTS OF PART 9, NBCC 2010, NBCC 2015

THIS DESIGN COMPLIES WITH:
- PART 9 OF OBC 2012, OBC 2018
- CSA 086-09, CSA 086-14
- TPIC 2011, TPIC 2014

(55 % OF 23.0 P.S.F. G.S.L. PLUS 8.4 P.S.F. RAIN LOAD) EQUALS 21.0 P.S.F. SPECIFIED ROOF LIVE LOAD

CSI: TC=0.12/1.00 (B-C:1) , BC=0.05/1.00 (B-F:4) , WB=0.03/1.00 (C-F:1) , SSI=0.05/1.00 (B-C:1)

DOL LUMBER=1.00 NAIL=1.00 LS BEND=1.10 COMP=1.10 SHEAR=1.10 TENS= 1.10

COMPANION LIVE LOAD FACTOR = 1.00

TRUSS PLATE MANUFACTURER IS NOT RESPONSIBLE FOR QUALITY CONTROL IN THE TRUSS MANUFACTURING PLANT .

NAIL VALUES

PLATE	GRIP(DRY) (PSI) MAX	MIN	SHEAR (PLI) MAX	MIN	SECTION (PLI) MAX	MIN
MT20	618	354	1667	788	1987	1656

PLATE PLACEMENT TOL. = 0.250 Inches

PLATE ROTATION TOL. = 5.0 Deg.

JSI GRIP= 0.27 (B) (INPUT = 0.90)
JSI METAL= 0.10 (D) (INPUT = 1.00)

A-18023543

JOB NAME	TRUSS NAME	QUANTITY	PLY	JOB DESC.	DRWG NO.
292597	H24T	2	1	TRUSS DESC.	

Alpa Roof Truss, Maple

Version 8.200 S Jan 6 2018 MiTek Industries, Inc. Sat Feb 17 14:33:37 2018 Page 1
ID:MF8liriaTok7DlbpT4B71Xys4PG-tRtYdTxbAHUwT8_wEcMUNFJq?N9zT8XcbbOWeLzkDNi

Scale = 1:52.7

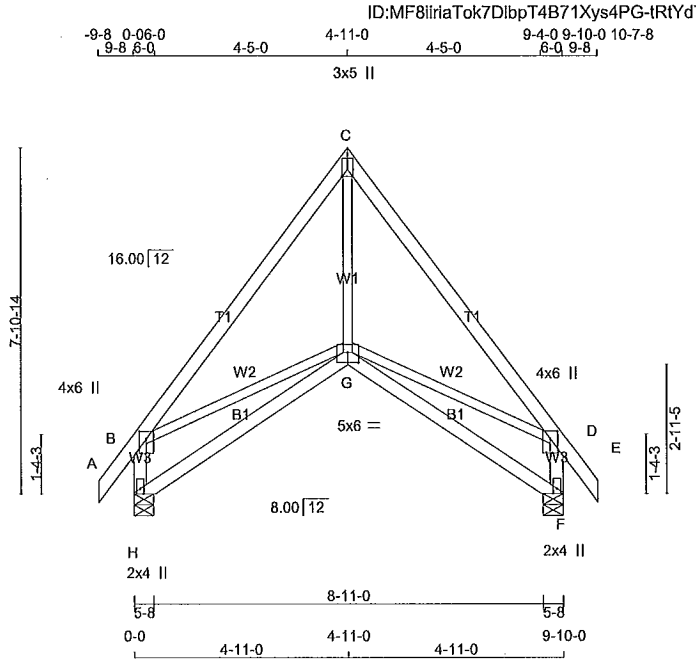

TOTAL WEIGHT = 2 X 50 = 101 lb

[M][F]

LUMBER
N. L. G. A. RULES

CHORDS	SIZE		LUMBER	DESCR.
A - C	2x4	DRY	No.2	SPF
C - E	2x4	DRY	No.2	SPF
H - B	2x4	DRY	No.2	SPF
F - D	2x4	DRY	No.2	SPF
H - G	2x4	DRY	No.2	SPF
G - F	2x4	DRY	No.2	SPF
ALL WEBS EXCEPT	2x3	DRY	No.2	SPF

DRY: SEASONED LUMBER.

PLATES (table is in inches)

JT	TYPE	PLATES	W	LEN	Y	X
B	TMVW+p	MT20	4.0	6.0	2.00	2.00
C	TTW+p	MT20	3.0	5.0	2.00	Edge
D	TMVW+p	MT20	4.0	6.0	2.00	2.00
F	BMV1+p	MT20	2.0	4.0	Edge	
G	BBWWW-p	MT20	5.0	6.0	2.75	3.00
H	BMV1+p	MT20	2.0	4.0	Edge	

Edge - INDICATES REFERENCE CORNER OF PLATE TOUCHES EDGE OF CHORD.

NOTE: Lateral brace(s) shown shall be 1x4 for Part 9 design as per OBC 9.23.13.11, and no less than 2x4 for Part 4 design

REGISTERED PROFESSIONAL ENGINEER
02/17/2018
EDWIN C. FOK
PROVINCE OF ONTARIO

DIMENSIONS, SUPPORTS AND LOADINGS SPECIFIED BY FABRICATOR TO BE VERIFIED BY BUILDING DESIGNER

BEARINGS

JT	FACTORED GROSS REACTION VERT	HORZ	MAXIMUM FACTORED GROSS REACTION DOWN	HORZ	UPLIFT	INPUT BRG IN-SX	REQRD BRG IN-SX
H	545	0	545	0	0	5-8	1-8
F	545	0	545	0	0	5-8	1-8

UNFACTORED REACTIONS

JT	1ST LCASE COMBINED	MAX./MIN. COMPONENT REACTIONS SNOW	LIVE	PERM.LIVE	WIND	DEAD	SOIL
H	387	245 / 0	0 / 0	0 / 0	0 / 0	143 / 0	0 / 0
F	387	245 / 0	0 / 0	0 / 0	0 / 0	143 / 0	0 / 0

BEARING MATERIAL TO BE SPF NO.2 OR BETTER AT JOINT(S) H, F

BRACING
TOP CHORD TO BE SHEATHED OR MAX. PURLIN SPACING = 6.25 FT.
MAX. UNBRACED BOTTOM CHORD LENGTH = 10.00 FT OR RIGID CEILING DIRECTLY APPLIED.

ALL PITCH BREAKS AND PERIMETER CORNER JOINTS MUST BE LATERALLY RESTRAINED.

LOADING
TOTAL LOAD CASES: (4)

CHORDS

MEMB. FR-TO	MAX. FACTORED FORCE (LBS)	FACTORED VERT. LOAD (PLF) FROM	TO	LC1 MAX CSI (LC)	MAX. UNBRAC LENGTH
A- B	0 / 28	-78.0	-78.0	0.05 (1)	10.00
B- C	-428 / 0	-78.0	-78.0	0.25 (1)	6.25
C- D	-428 / 0	-78.0	-78.0	0.25 (1)	6.25
D- E	0 / 28	-78.0	-78.0	0.05 (1)	10.00
H- B	-500 / 0	0.0	0.0	0.05 (1)	7.81
F- D	-500 / 0	0.0	0.0	0.05 (1)	7.81
H- G	0 / 0	-18.5	-18.5	0.13 (4)	10.00
G- F	0 / 0	-18.5	-18.5	0.13 (4)	10.00

WEBS

MEMB. FR-TO	MAX. FACTORED FORCE (LBS)	MAX CSI (LC)
G- C	0 / 301	0.07 (1)
B- G	0 / 277	0.06 (1)
G- D	0 / 277	0.06 (1)

DESIGN CRITERIA

SPECIFIED LOADS:

TOP CH.	LL	=	21.0	PSF
	DL	=	6.0	PSF
BOT CH.	LL	=	0.0	PSF
	DL	=	7.4	PSF
TOTAL LOAD		=	34.4	PSF

SPACING = 24.0 IN. C/C

THIS TRUSS IS DESIGNED FOR RESIDENTIAL OR SMALL BUILDING REQUIREMENTS OF PART 9, NBCC 2010, NBCC 2015

THIS DESIGN COMPLIES WITH:
- PART 9 OF OBC 2012, OBC 2018
- CSA 086-09, CSA 086-14
- TPIC 2011, TPIC 2014

(55 % OF 23.0 P.S.F. G.S.L. PLUS 8.4 P.S.F. RAIN LOAD) EQUALS 21.0 P.S.F. SPECIFIED ROOF LIVE LOAD

ALLOWABLE DEFL.(LL)= L/360 (0.33")
CALCULATED VERT. DEFL.(LL) = L/ 999 (0.01")
ALLOWABLE DEFL.(TL)= L/360 (0.33")
CALCULATED VERT. DEFL.(TL) = L/ 999 (0.04")

CSI: TC=0.25/1.00 (B-C:1) , BC=0.13/1.00 (G-H:4) , WB=0.07/1.00 (C-G:1) , SSI=0.09/1.00 (B-C:1)

DOL LUMBER=1.00 NAIL=1.00 LS BEND=1.10 COMP=1.10 SHEAR=1.10 TENS= 1.10

COMPANION LIVE LOAD FACTOR = 1.00

TRUSS PLATE MANUFACTURER IS NOT RESPONSIBLE FOR QUALITY CONTROL IN THE TRUSS MANUFACTURING PLANT .

NAIL VALUES

PLATE	GRIP(DRY) (PSI) MAX	MIN	SHEAR (PLI) MAX	MIN	SECTION (PLI) MAX	MIN
MT20	618	354	1667	788	1987	1656

PLATE PLACEMENT TOL. = 0.250 inches

PLATE ROTATION TOL. = 5.0 Deg.

JSI GRIP= 0.64 (H) (INPUT = 0.90)
JSI METAL= 0.24 (F) (INPUT = 1.00)

A-18023544

JOB NAME	TRUSS NAME	QUANTITY	PLY	JOB DESC.	DRWG NO.
292598	H1T	1	1	TRUSS DESC.	

Alpa Roof Truss, Maple

Version 8.200 S Jan 6 2018 MiTek Industries, Inc. Sat Feb 17 14:44:57 2018 Page 1
ID:MF8liriaTok7DlbpT4B71Xys4PG-zGydL_A81C9R2ezc4QZxwfTurU1bnTuhyO7VWwzkDD4

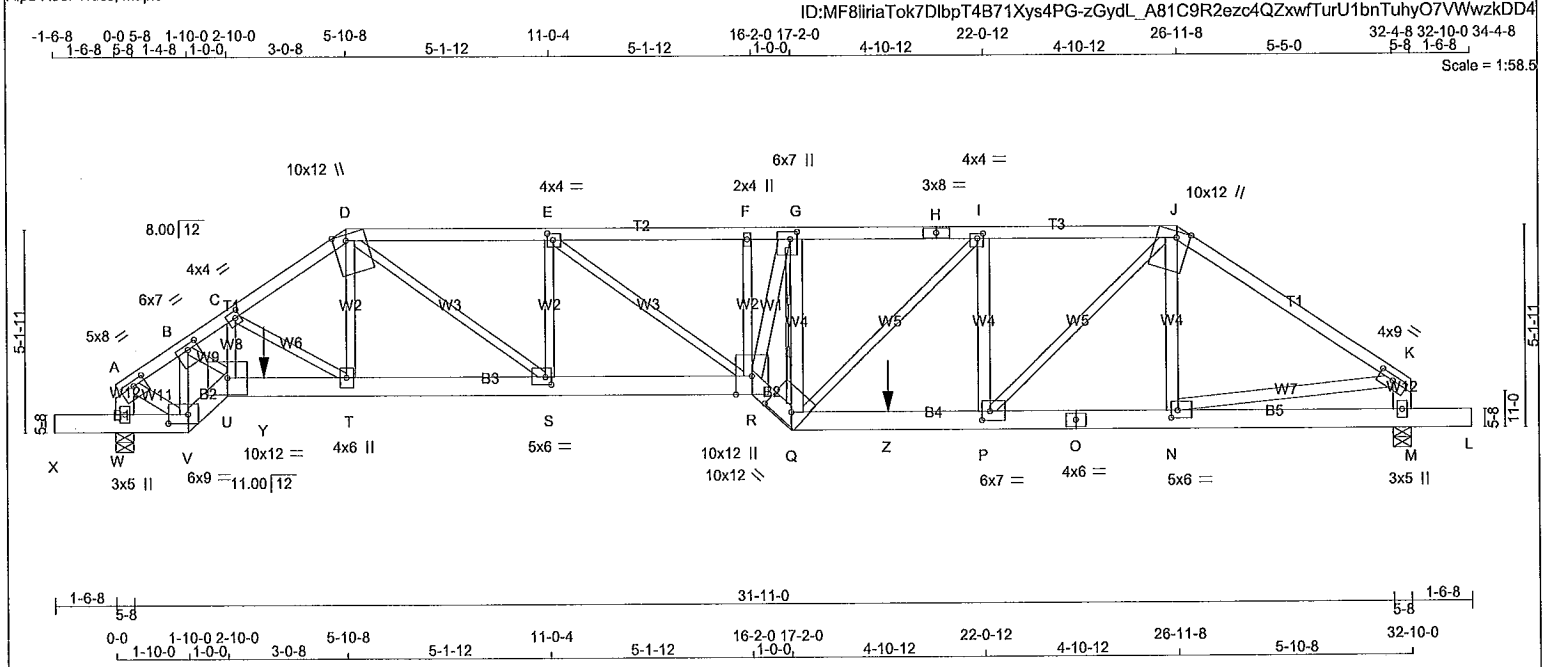

TOTAL WEIGHT = 172 lb

[M]

LUMBER
N. L. G. A. RULES

CHORDS	SIZE		LUMBER	DESCR.
A - D	2x4	DRY	1650F 1.5E	SPF
D - H	2x4	DRY	1650F 1.5E	SPF
H - J	2x4	DRY	1650F 1.5E	SPF
J - K	2x4	DRY	1650F 1.5E	SPF
W - A	2x6	DRY	No.2	SPF
M - K	2x6	DRY	No.2	SPF
X - V	2x6	DRY	No.2	SPF
V - U	2x6	DRY	1650F 1.5E	SPF
U - R	2x6	DRY	1650F 1.5E	SPF
R - Q	2x6	DRY	1650F 1.5E	SPF
Q - O	2x6	DRY	1650F 1.5E	SPF
O - L	2x6	DRY	1650F 1.5E	SPF
ALL WEBS	2x3	DRY	No.2	SPF
EXCEPT				
R - G	2x4	DRY	No.2	SPF
Q - G	2x4	DRY	No.2	SPF
P - I	2x4	DRY	No.2	SPF
N - J	2x4	DRY	No.2	SPF
A - V	2x4	DRY	No.2	SPF
N - K	2x4	DRY	No.2	SPF

DRY: SEASONED LUMBER.

PLATES (table is in inches)

JT	TYPE	PLATES	W	LEN	Y	X
A	TMVW-t	MT20	5.0	8.0	1.50	3.75
B	TMWW-t	MT20	6.0	7.0	1.50	3.25
C	TMWW-t	MT20	4.0	4.0	2.00	1.50
D	TTWW+m	MT20	10.0	12.0	Edge	4.00
E	TMWW-t	MT20	4.0	4.0	2.00	1.75
F	TMW+w	MT20	2.0	4.0		
G	TMWW+t	MT20	6.0	7.0	2.25	2.00
H	TS-t	MT20	3.0	8.0		
I	TMWW-t	MT20	4.0	4.0	1.50	1.75
J	TTWW+m	MT20	10.0	12.0	Edge	4.00
K	TMVW-t	MT20	4.0	9.0	1.50	4.50
M	BMV1+p	MT20	3.0	5.0		
N	BMWW-t	MT20	5.0	6.0	2.25	2.00
O	BS-t	MT20	4.0	6.0		
P	BMWW-t	MT20	6.0	7.0	2.75	2.50

NOTE: Lateral brace(s) shown shall be 1x4 for Part 9 design as per OBC 9.23.13.11, and no less than 2x4 for Part 4 design

REGISTERED PROFESSIONAL ENGINEER
02/17/2018
EDWIN C. FOK
PROVINCE OF ONTARIO

DIMENSIONS, SUPPORTS AND LOADINGS SPECIFIED BY FABRICATOR TO BE VERIFIED BY BUILDING DESIGNER

BEARINGS

JT	FACTORED GROSS REACTION VERT	HORZ	MAXIMUM FACTORED GROSS REACTION DOWN	HORZ	UPLIFT	INPUT BRG IN-SX	REQRD BRG IN-SX
W	3448	0	3448	0	0	5-8	5-7
M	2875	0	2875	0	0	5-8	3-10

ALLOW FOR 0.3" OF HORIZONTAL MOVEMENT DUE TO TOTAL LOAD

UNFACTORED REACTIONS

JT	1ST LCASE COMBINED	SNOW	MAX./MIN. COMPONENT REACTIONS LIVE	PERM.LIVE	WIND	DEAD	SOIL
W	2444	1570 / 0	0 / 0	0 / 0	0 / 0	875 / 0	0 / 0
M	2038	1308 / 0	0 / 0	0 / 0	0 / 0	731 / 0	0 / 0

BEARING MATERIAL TO BE SPF NO.2 OR BETTER AT JOINT(S) W, M

BRACING
TOP CHORD TO BE SHEATHED OR MAX. PURLIN SPACING = 2.49 FT.
MAX. UNBRACED BOTTOM CHORD LENGTH = 10.00 FT OR RIGID CEILING DIRECTLY APPLIED.

ALL PITCH BREAKS AND PERIMETER CORNER JOINTS MUST BE LATERALLY RESTRAINED.

2x4 DRY SPF No.2 T-BRACE AT G-Q

FASTEN T AND I-BRACES TO NARROW EDGE OF WEB WITH ONE ROW PER PLY OF 3" COMMON WIRE NAILS @ 6" O.C. WITH 3" MINIMUM END DISTANCE. BRACE MUST COVER 90% OF WEB LENGTH.

END VERTICAL(S) MUST BE SHEATHED OR HAVE BRACES AS INDICATED IN THE MAX. UNBRACED LENGTH COLUMN OF THE TABLE BELOW

LOADING
TOTAL LOAD CASES: (4)

CHORDS

MEMB. FR-TO	MAX. FACTORED FORCE (LBS)	FACTORED VERT. LOAD (PLF) FROM	TO	LC1	MAX CSI (LC)	MAX. UNBRAC LENGTH
A- B	-3446 / 0	-78.0	-78.0	0.16 (1)	4.15	
B- C	-6027 / 0	-78.0	-78.0	0.28 (1)	3.13	
C- D	-5246 / 0	-78.0	-78.0	0.28 (1)	3.37	
D- E	-6555 / 0	-78.0	-78.0	0.70 (1)	2.74	
E- F	-7402 / 0	-78.0	-78.0	0.79 (1)	2.49	
F- G	-7399 / 0	-78.0	-78.0	0.40 (1)	2.73	
G- H	-6000 / 0	-78.0	-78.0	0.56 (1)	2.95	
H- I	-6000 / 0	-78.0	-78.0	0.56 (1)	2.95	
I- J	-5124 / 0	-78.0	-78.0	0.49 (1)	3.25	
J- K	-3635 / 0	-78.0	-78.0	0.73 (1)	3.59	
W- A	-3219 / 0	0.0	0.0	0.23 (1)	5.86	
M- K	-2662 / 0	0.0	0.0	0.19 (1)	6.34	
X- W	0 / 0	-96.5	-96.5	0.08 (1)	10.00	
W- V	-1 / 0	-18.5	-18.5	0.08 (1)	10.00	
V- U	0 / 3593	-18.5	-18.5	0.29 (1)	10.00	
U- Y	0 / 5006	-18.5	-18.5	0.55 (1)	10.00	
Y- T	0 / 5006	-112.0	-112.0	0.55 (1)	10.00	
T- S	0 / 4384	-112.0	-112.0	0.50 (1)	10.00	
S- R	0 / 6555	-112.0	-112.0	0.68 (1)	10.00	
R- Q	0 / 7909	-112.0	-112.0	0.65 (1)	10.00	
Q- Z	0 / 5124	-112.0	-112.0	0.99 (1)	10.00	
Z- P	0 / 5124	-18.5	-18.5	0.99 (1)	10.00	
P- O	0 / 3008	-18.5	-18.5	0.48 (1)	10.00	
O- N	0 / 3008	-18.5	-18.5	0.48 (1)	10.00	
N- M	0 / 0	-18.5	-18.5	0.06 (4)	10.00	
M- L	0 / 0	-96.5	-96.5	0.06 (1)	10.00	

WEBS

MEMB. FR-TO	MAX. FACTORED FORCE (LBS)	MAX CSI (LC)
V- B	-3679 / 0	0.61 (1)
U- B	0 / 3250	0.80 (1)
U- C	0 / 616	0.15 (1)
C- T	-762 / 0	0.18 (1)
T- D	0 / 1014	0.25 (1)
D- S	0 / 2707	0.67 (1)
S- E	-1092 / 0	0.29 (1)
E- R	0 / 1054	0.26 (1)
R- F	-128 / 0	0.03 (1)
R- G	0 / 5442	0.96 (1)
Q- G	-5496 / 0	0.90 (1)
Q- I	0 / 1218	0.30 (1)
P- I	-1268 / 0	0.34 (1)
P- J	0 / 2949	0.73 (1)
N- J	-429 / 0	0.12 (1)
A- V	0 / 3093	0.55 (1)
N- K	0 / 3049	0.54 (1)

DESIGN CRITERIA

*** SPECIAL LOADS ANALYSIS ***
GEOMETRY AND/OR BASIC LOADS CHANGED BY USER.
LOADS WERE DERIVED FROM USER INPUT
NO FURTHER MODIFICATIONS WERE MADE

SPECIFIED LOADS:

TOP CH.	LL	=	21.0	PSF
	DL	=	6.0	PSF
BOT CH.	LL	=	0.0	PSF
	DL	=	7.4	PSF
TOTAL LOAD		=	34.4	PSF

SPACING = 24.0 IN. C/C

LOADING IN FLAT SECTION BASED ON A SLOPE OF 2.00/12 MINIMUM

GIRDER TYPE: CStdGirder
START DISTANCE = 3-9-4
START SPAN CARRIED = 5-10-8
END DISTANCE = 19-7-8
END SPAN CARRIED = 5-10-8
END WALL WIDTH = 0-0
APPLIED TO FRONT SIDE OF BOTTOM CHORD.
- ADDT'L LOADS BASED ON 55 % OF GSL.

*** NON STANDARD GIRDER ***
ADDT'L USER-DEFINED LOADS APPLIED TO ALL LOAD CASES.

THIS TRUSS IS DESIGNED FOR RESIDENTIAL OR SMALL BUILDING REQUIREMENTS OF PART 9, NBCC 2010, NBCC 2015

THIS DESIGN COMPLIES WITH:
- PART 9 OF OBC 2012, OBC 2018
- CSA 086-09, CSA 086-14
- TPIC 2011, TPIC 2014

DESIGN ASSUMPTIONS
-OVERHANG NOT TO BE ALTERED OR CUT OFF.

(55 % OF 23.0 P.S.F. G.S.L. PLUS 8.4 P.S.F. RAIN LOAD) EQUALS 21.0 P.S.F. SPECIFIED ROOF LIVE LOAD

ALLOWABLE DEFL.(LL)= L/360 (1.09")
CALCULATED VERT. DEFL.(LL) = L/ 999 (0.39")
ALLOWABLE DEFL.(TL)= L/360 (1.09")
CALCULATED VERT. DEFL.(TL) = L/ 533 (0.74")

CANTILEVER DEFLECTION:
ALLOWABLE DEFL.(LL)= L/120 (0.19")
CALCULATED VERT. DEFL.(LL) = L/ 287 (0.06")
ALLOWABLE DEFL.(TL)= L/120 (0.19")
CALCULATED VERT. DEFL.(TL) = L/ 152 (0.12")

CSI: TC=0.79/1.00 (E-F:1) , BC=0.99/1.00 (P-Q:1) , WB=0.96/1.00 (G-R:1) , SSI=0.45/1.00 (P-Q:1)

DOL LUMBER=1.00 NAIL=1.00 LS BEND=1.00 COMP=1.00 SHEAR=1.00 TENS= 1.00

COMPANION LIVE LOAD FACTOR = 1.00

A-18023545

CONTINUED ON PAGE 2

JOB NAME	TRUSS NAME	QUANTITY	PLY	JOB DESC.	DRWG NO.
292598	H1T	1	1	TRUSS DESC.	

Alpa Roof Truss, Maple

Version 8.200 S Jan 6 2018 MiTek Industries, Inc. Sat Feb 17 14:44:57 2018 Page 2
ID:MF8iriaTok7DlbpT4B71Xys4PG-zGydL_A81C9R2ezc4QZxwfTurU1bnTuhyO7VWwzkDD4

PLATES (table is in inches)

JT	TYPE	PLATES	W	LEN	Y	X
Q	BBWW-h	MT20	10.0	12.0	3.50	7.75
R	BBWWW+p	MT20	10.0	12.0	Edge	
S	BMWW-t	MT20	5.0	6.0	2.25	1.75
T	BMWW+t	MT20	4.0	6.0		
U	BBWW-l	MT20	10.0	12.0		
V	BBWW-l	MT20	6.0	9.0	2.75	6.00
W	BMV1+p	MT20	3.0	5.0		

Edge - INDICATES REFERENCE CORNER OF PLATE TOUCHES EDGE OF CHORD.

HANGERS NOTES

1) SPECIAL HANGER(S) OR CONNECTION(S) REQUIRED TO SUPPORT CONCENTRATED LOAD(S) 423.2 lbs FACTORED DOWN AT 3-9-4, AND 953.0 lbs FACTORED DOWN AT 19-7-8 ON BOTTOM CHORD. DESIGN FOR UNSPECIFIED CONNECTION(S) IS DELEGATED TO THE BUILDING DESIGNER.

NOTE: Lateral brace(s) shown shall be 1x4 for Part 9 design as per OBC 9.23.13.11, and no less than 2x4 for Part 4 design

REGISTERED PROFESSIONAL ENGINEER
02/17/2018
EDWIN C. FOK
PROVINCE OF ONTARIO

FACTORED CONCENTRATED LOADS (LBS)

JT	LOC.	LC1	MAX-	MAX+	FACE	DIR.	TYPE
Y	3-9-4	-423	-423	---	FRONT	VERT	TOTAL
Z	19-7-8	-953	-953	---	FRONT	VERT	TOTAL

AUTOSOLVE HEELS OFF

TRUSS PLATE MANUFACTURER IS NOT RESPONSIBLE FOR QUALITY CONTROL IN THE TRUSS MANUFACTURING PLANT .

NAIL VALUES

PLATE	GRIP(DRY) (PSI)		SHEAR (PLI)		SECTION (PLI)	
	MAX	MIN	MAX	MIN	MAX	MIN
MT20	618	354	1667	788	1987	1656

PLATE PLACEMENT TOL. = 0.250 Inches

PLATE ROTATION TOL. = 5.0 Deg.

JSI GRIP= 0.90 (V) (INPUT = 0.90)
JSI METAL= 0.87 (O) (INPUT = 1.00)

A·18023545(2)

JOB NAME	TRUSS NAME	QUANTITY	PLY	JOB DESC.	DRWG NO.
292598	H2T	1	1	TRUSS DESC.	

Alpa Roof Truss, Maple

Version 8.200 S Jan 6 2018 MiTek Industries, Inc. Sat Feb 17 14:45:05 2018 Page 1
ID:MF8iIriaTok7DlbpT4B71Xys4PG-koRe0jG99fAl0ta9Y5ipFLpE6Itxf54toe3wnTzkDCy

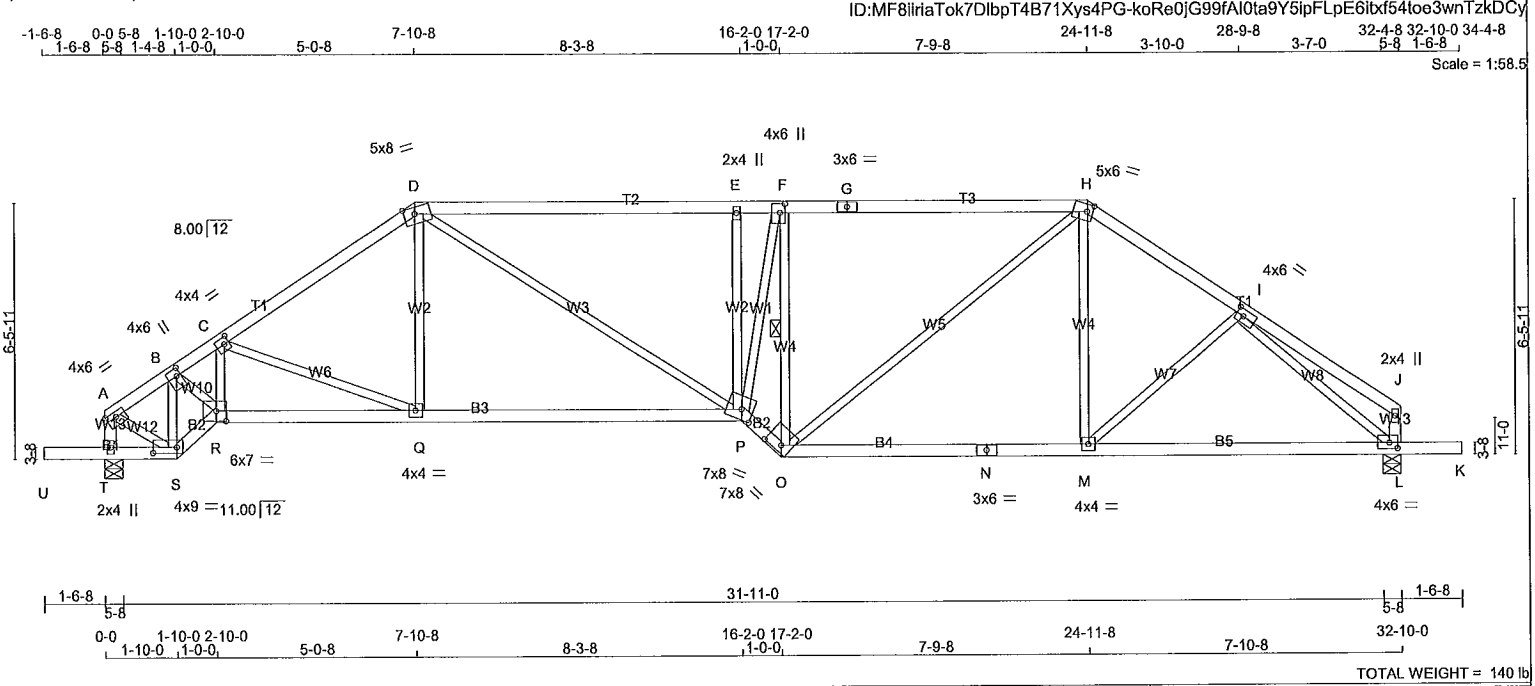

TOTAL WEIGHT = 140 lb

[M][F]

LUMBER
N. L. G. A. RULES

CHORDS	SIZE		LUMBER	DESCR.
A - D	2x4	DRY	No.2	SPF
D - G	2x4	DRY	No.2	SPF
G - H	2x4	DRY	No.2	SPF
H - J	2x4	DRY	No.2	SPF
T - A	2x4	DRY	No.2	SPF
L - J	2x4	DRY	No.2	SPF
U - S	2x4	DRY	No.2	SPF
S - R	2x4	DRY	No.2	SPF
R - P	2x4	DRY	No.2	SPF
P - O	2x4	DRY	No.2	SPF
O - N	2x4	DRY	No.2	SPF
N - K	2x4	DRY	No.2	SPF
ALL WEBS EXCEPT	2x3	DRY	No.2	SPF

DRY: SEASONED LUMBER.

PLATES (table is in inches)

JT	TYPE	PLATES	W	LEN	Y	X
A	TMVW-t	MT20	4.0	6.0	1.50	3.00
B	TMWW+t	MT20	4.0	6.0	2.25	1.25
C	TMWW-t	MT20	4.0	4.0	2.00	1.50
D	TTWW-m	MT20	5.0	8.0	2.00	3.25
E	TMW+w	MT20	2.0	4.0		
F	TMWW+t	MT20	4.0	6.0	2.75	1.50
G	TS-t	MT20	3.0	6.0		
H	TTWW-m	MT20	5.0	6.0	2.25	1.75
I	TMWW-t	MT20	4.0	6.0	2.00	2.25
J	TMV+p	MT20	2.0	4.0		
L	BMVW1-t	MT20	4.0	6.0	1.75	2.50
M	BMWW-t	MT20	4.0	4.0		
N	BS-t	MT20	3.0	6.0		
O	BBWW-h	MT20	7.0	8.0	2.00	5.00
P	BBWWW-m	MT20	7.0	8.0	3.00	3.50
Q	BMWW-t	MT20	4.0	4.0		
R	BBWW-l	MT20	6.0	7.0	3.00	3.00
S	BBWW-l	MT20	4.0	9.0	1.75	7.25
T	BMV1+p	MT20	2.0	4.0		

NOTE: Lateral brace(s) shown shall be 1x4 for Part 9 design as per OBC 9.23.13.11, and no less than 2x4 for Part 4 design

REGISTERED PROFESSIONAL ENGINEER
02/17/2018
EDWIN C. FOK
PROVINCE OF ONTARIO

DIMENSIONS, SUPPORTS AND LOADINGS SPECIFIED BY FABRICATOR TO BE VERIFIED BY BUILDING DESIGNER

BEARINGS

JT	FACTORED GROSS REACTION VERT	HORZ	MAXIMUM FACTORED GROSS REACTION DOWN	HORZ	UPLIFT	INPUT BRG IN-SX	REQRD BRG IN-SX
T	1736	0	1736	0	0	5-8	2-9
L	1729	0	1729	0	0	5-8	1-13

UNFACTORED REACTIONS

JT	1ST LCASE COMBINED	MAX./MIN. COMPONENT REACTIONS SNOW	LIVE	PERM.LIVE	WIND	DEAD	SOIL
T	1238	755 / 0	0 / 0	0 / 0	0 / 0	482 / 0	0 / 0
L	1233	752 / 0	0 / 0	0 / 0	0 / 0	480 / 0	0 / 0

BEARING MATERIAL TO BE SPF NO.2 OR BETTER AT JOINT(S) T, L

BRACING
TOP CHORD TO BE SHEATHED OR MAX. PURLIN SPACING = 3.39 FT.
MAX. UNBRACED BOTTOM CHORD LENGTH = 10.00 FT OR RIGID CEILING DIRECTLY APPLIED.

ALL PITCH BREAKS AND PERIMETER CORNER JOINTS MUST BE LATERALLY RESTRAINED.

1 LATERAL BRACE(S) AT 1/ 2 LENGTH OF F-O.

END VERTICAL(S) MUST BE SHEATHED OR HAVE BRACES AS INDICATED IN THE MAX. UNBRACED LENGTH COLUMN OF THE TABLE BELOW

LOADING
TOTAL LOAD CASES: (4)

CHORDS

MEMB. FR-TO	MAX. FACTORED FORCE (LBS)	FACTORED VERT. LOAD (PLF) FROM	TO	LC1 MAX CSI (LC)	MAX. UNBRAC LENGTH
A- B	-1496 / 0	-78.0	-78.0	0.11 (1)	5.27
B- C	-2587 / 0	-78.0	-78.0	0.24 (1)	4.10
C- D	-2192 / 0	-78.0	-78.0	0.30 (1)	4.35
D- E	-2570 / 0	-78.0	-78.0	0.84 (1)	3.39
E- F	-2561 / 0	-78.0	-78.0	0.64 (1)	3.50
F- G	-2180 / 0	-78.0	-78.0	0.68 (1)	3.87
G- H	-2180 / 0	-78.0	-78.0	0.68 (1)	3.87
H- I	-1886 / 0	-78.0	-78.0	0.18 (1)	4.75
I- J	0 / 18	-78.0	-78.0	0.17 (1)	10.00
T- A	-1508 / 0	0.0	0.0	0.15 (1)	6.68
L- J	-121 / 0	0.0	0.0	0.01 (1)	7.81
U- T	0 / 0	-96.5	-96.5	0.16 (1)	10.00
T- S	0 / 0	-18.5	-18.5	0.12 (1)	10.00
S- R	0 / 1552	-18.5	-18.5	0.25 (1)	10.00
R- Q	0 / 2236	-18.5	-18.5	0.51 (1)	10.00
Q- P	0 / 1812	-18.5	-18.5	0.45 (4)	10.00
P- O	0 / 2903	-18.5	-18.5	0.47 (1)	10.00
O- N	0 / 1555	-18.5	-18.5	0.47 (4)	10.00
N- M	0 / 1555	-18.5	-18.5	0.47 (4)	10.00
M- L	0 / 1563	-18.5	-18.5	0.47 (4)	10.00
L- K	0 / 0	-96.5	-96.5	0.16 (1)	10.00

WEBS

MEMB. FR-TO	MAX. FACTORED FORCE (LBS)	MAX CSI (LC)
S- B	-1675 / 0	0.26 (1)
B- R	0 / 1550	0.35 (1)
R- C	-6 / 41	0.01 (4)
C- Q	-461 / 0	0.23 (1)
Q- D	0 / 308	0.08 (4)
D- P	0 / 896	0.20 (1)
P- E	-440 / 0	0.20 (1)
P- F	0 / 2045	0.46 (1)
O- F	-2385 / 0	0.65 (1)
O- H	0 / 796	0.18 (1)
M- H	0 / 182	0.06 (4)
M- I	-15 / 47	0.02 (4)
A- S	0 / 1363	0.31 (1)
I- L	-2099 / 0	0.95 (1)

DESIGN CRITERIA

SPECIFIED LOADS:

TOP CH.	LL	=	21.0	PSF
	DL	=	6.0	PSF
BOT CH.	LL	=	0.0	PSF
	DL	=	7.4	PSF
TOTAL LOAD		=	34.4	PSF

SPACING = 24.0 IN. C/C

LOADING IN FLAT SECTION BASED ON A SLOPE OF 2.00/12 MINIMUM

THIS TRUSS IS DESIGNED FOR RESIDENTIAL OR SMALL BUILDING REQUIREMENTS OF PART 9, NBCC 2010, NBCC 2015

THIS DESIGN COMPLIES WITH:
- PART 9 OF OBC 2012, OBC 2018
- CSA 086-09, CSA 086-14
- TPIC 2011, TPIC 2014

DESIGN ASSUMPTIONS
-OVERHANG NOT TO BE ALTERED OR CUT OFF.

(55 % OF 23.0 P.S.F. G.S.L. PLUS 8.4 P.S.F. RAIN LOAD) EQUALS 21.0 P.S.F. SPECIFIED ROOF LIVE LOAD

ALLOWABLE DEFL.(LL)= L/360 (1.09")
CALCULATED VERT. DEFL.(LL) = L/ 999 (0.16")
ALLOWABLE DEFL.(TL)= L/360 (1.09")
CALCULATED VERT. DEFL.(TL) = L/ 999 (0.39")

CANTILEVER DEFLECTION:
ALLOWABLE DEFL.(LL)= L/120 (0.19")
CALCULATED VERT. DEFL.(LL) = L/ 999 (0.01")
ALLOWABLE DEFL.(TL)= L/120 (0.19")
CALCULATED VERT. DEFL.(TL) = L/ 611 (0.03")

CSI: TC=0.84/1.00 (D-E:1) , BC=0.51/1.00 (Q-R:1) , WB=0.95/1.00 (I-L:1) , SSI=0.30/1.00 (D-E:1)

DOL LUMBER=1.00 NAIL=1.00 LS BEND=1.10 COMP=1.10 SHEAR=1.10 TENS= 1.10

COMPANION LIVE LOAD FACTOR = 1.00

TRUSS PLATE MANUFACTURER IS NOT RESPONSIBLE FOR QUALITY CONTROL IN THE TRUSS MANUFACTURING PLANT .

NAIL VALUES

PLATE	GRIP(DRY) (PSI) MAX	MIN	SHEAR (PLI) MAX	MIN	SECTION (PLI) MAX	MIN
MT20	618	354	1667	788	1987	1656

PLATE PLACEMENT TOL. = 0.250 inches

PLATE ROTATION TOL. = 5.0 Deg.

JSI GRIP= 0.90 (P) (INPUT = 0.90)
JSI METAL= 0.52 (I) (INPUT = 1.00)

A-18023546

CONTINUED ON PAGE 2

JOB NAME	TRUSS NAME	QUANTITY	PLY	JOB DESC.	DRWG NO.
292598	H3T	1	1	TRUSS DESC.	

Alpa Roof Truss, Maple

Version 8.200 S Jan 6 2018 MiTek Industries, Inc. Sat Feb 17 14:45:40 2018 Page 1

ID:MF8iiriaTok7DlbpT4B71Xys4PG-DX3tMhh6vQaKlFmt5yq1AjlHApphMzn0ra1GWxzkDCP

-1-6-8 0-0 5-8 1-10-0 2-10-0 7-0-8 9-10-8 6-3-8 16-2-0 17-2-0 5-9-8 22-11-8 9-5-0 32-4-8 32-10-0 34-4-8

Scale = 1:58.5

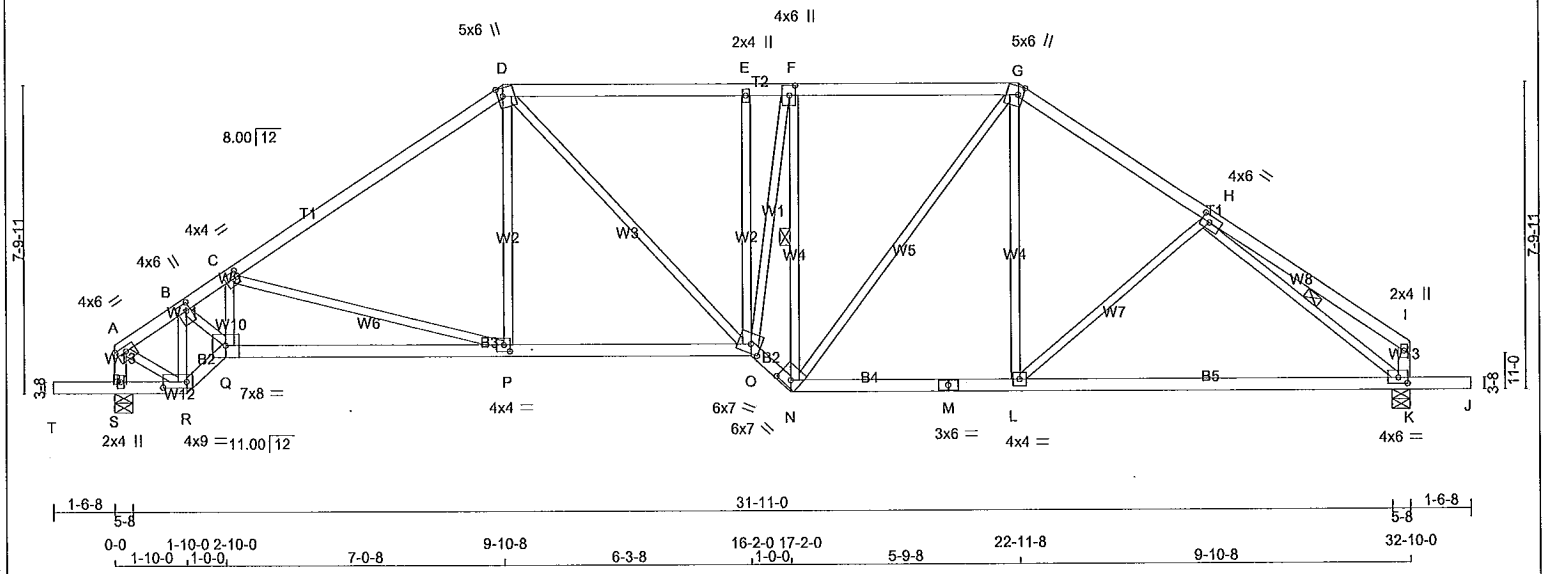

1-6-8 31-11-0 1-6-8

5-8 5-8

0-0 1-10-0 2-10-0 7-0-8 9-10-8 6-3-8 16-2-0 17-2-0 5-9-8 22-11-8 9-10-8 32-10-0

TOTAL WEIGHT = 149 lb

[M][F]

LUMBER

N. L. G. A. RULES

CHORDS	SIZE		LUMBER	DESCR.
A - D	2x4	DRY	No.2	SPF
D - G	2x4	DRY	No.2	SPF
G - I	2x4	DRY	No.2	SPF
S - A	2x4	DRY	No.2	SPF
K - I	2x4	DRY	No.2	SPF
T - R	2x4	DRY	No.2	SPF
R - Q	2x4	DRY	No.2	SPF
Q - O	2x4	DRY	No.2	SPF
O - N	2x4	DRY	No.2	SPF
N - M	2x4	DRY	No.2	SPF
M - J	2x4	DRY	No.2	SPF
ALL WEBS EXCEPT	2x3	DRY	No.2	SPF

DRY: SEASONED LUMBER.

PLATES (table is in inches)

JT	TYPE	PLATES	W	LEN	Y	X
A	TMVW-t	MT20	4.0	6.0	1.50	3.00
B	TMWW+t	MT20	4.0	6.0	2.25	1.25
C	TMWW-t	MT20	4.0	4.0	2.00	1.50
D	TTWW+m	MT20	5.0	6.0	2.50	1.50
E	TMW+w	MT20	2.0	4.0		
F	TMWW+t	MT20	4.0	6.0	3.00	1.75
G	TTWW+m	MT20	5.0	6.0	2.50	1.50
H	TMWW-t	MT20	4.0	6.0	2.00	2.50
I	TMV+p	MT20	2.0	4.0		
K	BMVW1-t	MT20	4.0	6.0	1.75	2.75
L	BMWW-t	MT20	4.0	4.0		
M	BS-t	MT20	3.0	6.0		
N	BBWW-h	MT20	6.0	7.0	2.00	4.00
O	BBWWW-m	MT20	6.0	7.0	2.75	3.00
P	BMWW-t	MT20	4.0	4.0	2.00	1.75
Q	BBWW-l	MT20	7.0	8.0		
R	BBWW-l	MT20	4.0	9.0	1.75	7.25
S	BMV1+p	MT20	2.0	4.0		

NOTE: Lateral brace(s) shown shall be 1x4 for Part 9 design as per OBC 9.23.13.11, and no less than 2x4 for Part 4 design

REGISTERED PROFESSIONAL ENGINEER
02/17/2018
EDWIN C. FOK
PROVINCE OF ONTARIO

DIMENSIONS, SUPPORTS AND LOADINGS SPECIFIED BY FABRICATOR TO BE VERIFIED BY BUILDING DESIGNER

BEARINGS

JT	FACTORED GROSS REACTION VERT	HORZ	MAXIMUM FACTORED GROSS REACTION DOWN	HORZ	UPLIFT	INPUT BRG IN-SX	REQRD BRG IN-SX
S	1736	0	1736	0	0	5-8	2-9
K	1729	0	1729	0	0	5-8	1-13

UNFACTORED REACTIONS

JT	1ST LCASE COMBINED	MAX./MIN. COMPONENT REACTIONS SNOW	LIVE	PERM.LIVE	WIND	DEAD	SOIL
S	1238	755 / 0	0 / 0	0 / 0	0 / 0	482 / 0	0 / 0
K	1233	752 / 0	0 / 0	0 / 0	0 / 0	480 / 0	0 / 0

BEARING MATERIAL TO BE SPF NO.2 OR BETTER AT JOINT(S) S, K

BRACING

TOP CHORD TO BE SHEATHED OR MAX. PURLIN SPACING = 3.80 FT.
MAX. UNBRACED BOTTOM CHORD LENGTH = 10.00 FT OR RIGID CEILING DIRECTLY APPLIED.

ALL PITCH BREAKS AND PERIMETER CORNER JOINTS MUST BE LATERALLY RESTRAINED.

1 LATERAL BRACE(S) AT 1/ 2 LENGTH OF F-N, H-K.

END VERTICAL(S) MUST BE SHEATHED OR HAVE BRACES AS INDICATED IN THE MAX. UNBRACED LENGTH COLUMN OF THE TABLE BELOW

LOADING

TOTAL LOAD CASES: (4)

CHORDS

MEMB. FR-TO	MAX. FACTORED FORCE (LBS)	FACTORED VERT. LOAD (PLF) FROM	TO	LC1 MAX CSI (LC)	MAX. UNBRAC LENGTH
A- B	-1485 / 0	-78.0	-78.0	0.15 (1)	5.24
B- C	-2595 / 0	-78.0	-78.0	0.46 (1)	3.80
C- D	-2026 / 0	-78.0	-78.0	0.59 (1)	4.18
D- E	-2009 / 0	-78.0	-78.0	0.43 (1)	4.34
E- F	-2004 / 0	-78.0	-78.0	0.33 (1)	4.43
F- G	-1762 / 0	-78.0	-78.0	0.33 (1)	4.70
G- H	-1796 / 0	-78.0	-78.0	0.28 (1)	4.74
H- I	0 / 24	-78.0	-78.0	0.30 (1)	10.00
S- A	-1508 / 0	0.0	0.0	0.15 (1)	6.68
K- I	-153 / 0	0.0	0.0	0.02 (1)	7.81
T- S	0 / 0	-96.5	-96.5	0.16 (1)	10.00
S- R	0 / 0	-18.5	-18.5	0.12 (1)	10.00
R- Q	0 / 1527	-18.5	-18.5	0.25 (1)	10.00
Q- P	0 / 2343	-18.5	-18.5	0.51 (1)	10.00
P- O	0 / 1665	-18.5	-18.5	0.40 (1)	10.00
O- N	0 / 2354	-18.5	-18.5	0.38 (1)	10.00
N- M	0 / 1476	-18.5	-18.5	0.54 (4)	10.00
M- L	0 / 1476	-18.5	-18.5	0.54 (4)	10.00
L- K	0 / 1597	-18.5	-18.5	0.54 (4)	10.00
K- J	0 / 0	-96.5	-96.5	0.16 (1)	10.00

WEBS

MEMB. FR-TO	MAX. FACTORED FORCE (LBS)	MAX CSI (LC)
R- B	-1649 / 0	0.26 (1)
B- Q	0 / 1720	0.39 (1)
Q- C	-119 / 40	0.02 (1)
C- P	-709 / 0	0.75 (1)
P- D	0 / 327	0.08 (4)
D- O	0 / 497	0.11 (1)
O- E	-310 / 0	0.25 (1)
O- F	0 / 1622	0.36 (1)
N- F	-1921 / 0	0.74 (1)
N- G	0 / 468	0.11 (1)
L- G	0 / 290	0.07 (4)
L- H	-165 / 3	0.13 (1)
A- R	0 / 1341	0.30 (1)
H- K	-2091 / 0	0.62 (1)

DESIGN CRITERIA

SPECIFIED LOADS:

TOP CH.	LL	=	21.0	PSF
	DL	=	6.0	PSF
BOT CH.	LL	=	0.0	PSF
	DL	=	7.4	PSF
TOTAL LOAD		=	34.4	PSF

SPACING = 24.0 IN. C/C

LOADING IN FLAT SECTION BASED ON A SLOPE OF 2.00/12 MINIMUM

THIS TRUSS IS DESIGNED FOR RESIDENTIAL OR SMALL BUILDING REQUIREMENTS OF PART 9, NBCC 2010, NBCC 2015

THIS DESIGN COMPLIES WITH:
- PART 9 OF OBC 2012, OBC 2018
- CSA 086-09, CSA 086-14
- TPIC 2011, TPIC 2014

DESIGN ASSUMPTIONS
-OVERHANG NOT TO BE ALTERED OR CUT OFF.

(55 % OF 23.0 P.S.F. G.S.L. PLUS 8.4 P.S.F. RAIN LOAD) EQUALS 21.0 P.S.F. SPECIFIED ROOF LIVE LOAD

ALLOWABLE DEFL.(LL)= L/360 (1.09")
CALCULATED VERT. DEFL.(LL) = L/ 999 (0.13")
ALLOWABLE DEFL.(TL)= L/360 (1.09")
CALCULATED VERT. DEFL.(TL) = L/ 999 (0.35")

CANTILEVER DEFLECTION:
ALLOWABLE DEFL.(LL)= L/120 (0.19")
CALCULATED VERT. DEFL.(LL) = L/ 999 (0.02")
ALLOWABLE DEFL.(TL)= L/120 (0.19")
CALCULATED VERT. DEFL.(TL) = L/ 581 (0.03")

CSI: TC=0.59/1.00 (C-D:1) , BC=0.54/1.00 (L-N:4) , WB=0.75/1.00 (C-P:1) , SSI=0.28/1.00 (B-C:1)

DOL LUMBER=1.00 NAIL=1.00 LS BEND=1.10 COMP=1.10 SHEAR=1.10 TENS= 1.10

COMPANION LIVE LOAD FACTOR = 1.00

AUTOSOLVE LEFT HEEL ONLY

TRUSS PLATE MANUFACTURER IS NOT RESPONSIBLE FOR QUALITY CONTROL IN THE TRUSS MANUFACTURING PLANT .

NAIL VALUES

PLATE	GRIP(DRY) (PSI) MAX	MIN	SHEAR (PLI) MAX	MIN	SECTION (PLI) MAX	MIN
MT20	618	354	1667	788	1987	1656

PLATE PLACEMENT TOL. = 0.250 Inches

PLATE ROTATION TOL. = 5.0 Deg.

JSI GRIP= 0.90 (K) (INPUT = 0.90)
JSI METAL= 0.58 (M) (INPUT = 1.00)

A-18023547

CONTINUED ON PAGE 2

JOB NAME	TRUSS NAME	QUANTITY	PLY	JOB DESC.	DRWG NO.
292598	H4T	2	1	TRUSS DESC.	

Alpa Roof Truss, Maple

Version 8.200 S Jan 6 2018 MiTek Industries, Inc. Sat Feb 17 14:45:49 2018 Page 1

ID:MF8iiriaTok7DlbpT4B71Xys4PG-SG5HFmoloBj3leyc7LU81ddt8Rw2z0PLvUjFKvzkDCG

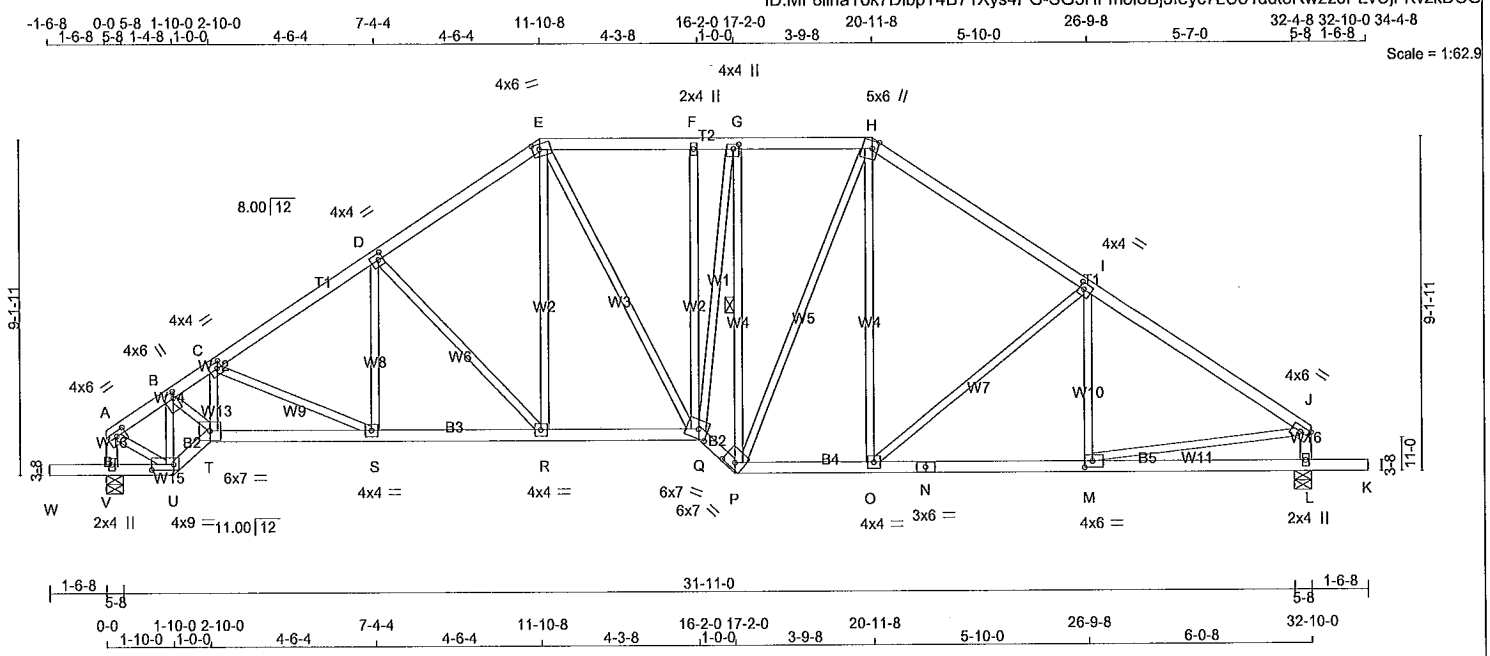

TOTAL WEIGHT = 2 X 167 = 334 lb

[M][F]

LUMBER

N. L. G. A. RULES

CHORDS	SIZE		LUMBER	DESCR.
A - E	2x4	DRY	No.2	SPF
E - H	2x4	DRY	No.2	SPF
H - J	2x4	DRY	No.2	SPF
V - A	2x4	DRY	No.2	SPF
L - J	2x4	DRY	No.2	SPF
W - U	2x4	DRY	No.2	SPF
U - T	2x4	DRY	No.2	SPF
T - Q	2x4	DRY	No.2	SPF
Q - P	2x4	DRY	No.2	SPF
P - N	2x4	DRY	No.2	SPF
N - K	2x4	DRY	No.2	SPF
ALL WEBS EXCEPT	2x3	DRY	No.2	SPF

DRY: SEASONED LUMBER.

PLATES (table is in inches)

JT	TYPE	PLATES	W	LEN	Y	X
A	TMVW-t	MT20	4.0	6.0	1.50	3.00
B	TMWW+t	MT20	4.0	6.0	2.00	1.00
C, D, I						
C	TMWW-t	MT20	4.0	4.0	2.00	1.50
E	TTWW-m	MT20	4.0	6.0	1.75	2.25
F	TMW+w	MT20	2.0	4.0		
G	TMWW+t	MT20	4.0	4.0	1.50	1.75
H	TTWW+m	MT20	5.0	6.0	Edge	1.75
J	TMVW-t	MT20	4.0	6.0	1.75	Edge
L	BMV1+p	MT20	2.0	4.0		
M	BMWW-t	MT20	4.0	6.0	2.00	2.50
N	BS-t	MT20	3.0	6.0		
O, R, S						
O	BMWW-t	MT20	6.0	4.0		
P	BBWW-h	MT20	6.0	7.0	2.00	4.00
Q	BBWWW-m	MT20	6.0	7.0	3.00	3.00
T	BBWW-l	MT20	6.0	7.0		
U	BBWW-l	MT20	4.0	9.0	1.75	7.25
V	BMV1+p	MT20	2.0	4.0		

Edge - INDICATES REFERENCE CORNER OF PLATE TOUCHES EDGE OF CHORD.

NOTE: Lateral brace(s) shown shall be 1x4 for Part 9 design as per OBC 9.23.13.11, and no less than 2x4 for Part 4 design

REGISTERED PROFESSIONAL ENGINEER
02/17/2018
EDWIN C. FOK
PROVINCE OF ONTARIO

DIMENSIONS, SUPPORTS AND LOADINGS SPECIFIED BY FABRICATOR TO BE VERIFIED BY BUILDING DESIGNER

BEARINGS

JT	FACTORED GROSS REACTION VERT	HORZ	MAXIMUM FACTORED GROSS REACTION DOWN	HORZ	UPLIFT	INPUT BRG IN-SX	REQRD BRG IN-SX
V	1736	0	1736	0	0	5-8	2-9
L	1729	0	1729	0	0	5-8	2-9

UNFACTORED REACTIONS

JT	1ST LCASE COMBINED	MAX /MIN. COMPONENT REACTIONS SNOW	LIVE	PERM.LIVE	WIND	DEAD	SOIL
V	1238	755 / 0	0 / 0	0 / 0	0 / 0	482 / 0	0 / 0
L	1233	752 / 0	0 / 0	0 / 0	0 / 0	480 / 0	0 / 0

BEARING MATERIAL TO BE SPF NO.2 OR BETTER AT JOINT(S) V, L

BRACING

TOP CHORD TO BE SHEATHED OR MAX. PURLIN SPACING = 4.22 FT.
MAX. UNBRACED BOTTOM CHORD LENGTH = 10.00 FT OR RIGID CEILING DIRECTLY APPLIED.

ALL PITCH BREAKS AND PERIMETER CORNER JOINTS MUST BE LATERALLY RESTRAINED.

1 LATERAL BRACE(S) AT 1/ 2 LENGTH OF G-P.

END VERTICAL(S) MUST BE SHEATHED OR HAVE BRACES AS INDICATED IN THE MAX. UNBRACED LENGTH COLUMN OF THE TABLE BELOW

LOADING

TOTAL LOAD CASES: (4)

CHORDS

MEMB. FR-TO	MAX. FACTORED FORCE (LBS)	FACTORED VERT. LOAD LC1 (PLF) FROM	TO	MAX CSI (LC)	MAX. UNBRAC LENGTH
A- B	-1502 / 0	-78.0	-78.0	0.09 (1)	5.29
B- C	-2583 / 0	-78.0	-78.0	0.13 (1)	4.22
C- D	-2233 / 0	-78.0	-78.0	0.25 (1)	4.37
D- E	-1833 / 0	-78.0	-78.0	0.23 (1)	4.75
E- F	-1646 / 0	-78.0	-78.0	0.21 (1)	4.96
F- G	-1644 / 0	-78.0	-78.0	0.14 (1)	5.05
G- H	-1478 / 0	-78.0	-78.0	0.14 (1)	5.27
H- I	-1662 / 0	-78.0	-78.0	0.41 (1)	4.72
I- J	-1962 / 0	-78.0	-78.0	0.45 (1)	4.39
V- A	-1508 / 0	0.0	0.0	0.15 (1)	6.68
L- J	-1534 / 0	0.0	0.0	0.16 (1)	6.64
W- V	0 / 0	-96.5	-96.5	0.16 (1)	10.00
V- U	0 / 0	-18.5	-18.5	0.12 (1)	10.00
U- T	0 / 1565	-18.5	-18.5	0.25 (1)	10.00
T- S	0 / 2180	-18.5	-18.5	0.40 (1)	10.00
S- R	0 / 1870	-18.5	-18.5	0.35 (1)	10.00
R- Q	0 / 1512	-18.5	-18.5	0.29 (1)	10.00
Q- P	0 / 1980	-18.5	-18.5	0.32 (1)	10.00
P- O	0 / 1359	-18.5	-18.5	0.27 (1)	10.00
O- N	0 / 1657	-18.5	-18.5	0.34 (1)	10.00
N- M	0 / 1657	-18.5	-18.5	0.34 (1)	10.00
M- L	0 / 0	-18.5	-18.5	0.16 (4)	10.00
L- K	0 / 0	-96.5	-96.5	0.16 (1)	10.00

WEBS

MEMB. FR-TO	MAX. FACTORED FORCE (LBS)	MAX CSI (LC)
U- B	-1689 / 0	0.26 (1)
B- T	0 / 1464	0.33 (1)
T- C	0 / 76	0.02 (4)
C- S	-339 / 0	0.13 (1)
S- D	0 / 212	0.05 (4)
D- R	-530 / 0	0.44 (1)
R- E	0 / 468	0.11 (1)
E- Q	0 / 281	0.06 (1)
Q- F	-176 / 0	0.23 (1)
Q- G	0 / 1330	0.30 (1)
P- G	-1574 / 0	0.86 (1)
P- H	0 / 302	0.07 (1)
O- H	0 / 339	0.08 (1)
O- I	-393 / 0	0.48 (1)
M- I	-125 / 46	0.05 (1)
A- U	0 / 1374	0.31 (1)
M- J	0 / 1676	0.38 (1)

DESIGN CRITERIA

SPECIFIED LOADS:

TOP CH.	LL	=	21.0	PSF
	DL	=	6.0	PSF
BOT CH.	LL	=	0.0	PSF
	DL	=	7.4	PSF
TOTAL LOAD		=	34.4	PSF

SPACING = 24.0 IN. C/C

LOADING IN FLAT SECTION BASED ON A SLOPE OF 2.00/12 MINIMUM

THIS TRUSS IS DESIGNED FOR RESIDENTIAL OR SMALL BUILDING REQUIREMENTS OF PART 9, NBCC 2010, NBCC 2015

THIS DESIGN COMPLIES WITH:
- PART 9 OF OBC 2012, OBC 2018
- CSA 086-09, CSA 086-14
- TPIC 2011, TPIC 2014

DESIGN ASSUMPTIONS
-OVERHANG NOT TO BE ALTERED OR CUT OFF.

(55 % OF 23.0 P.S.F. G.S.L. PLUS 8.4 P.S.F. RAIN LOAD) EQUALS 21.0 P.S.F. SPECIFIED ROOF LIVE LOAD

ALLOWABLE DEFL.(LL)= L/360 (1.09")
CALCULATED VERT. DEFL.(LL) = L/ 999 (0.11")
ALLOWABLE DEFL.(TL)= L/360 (1.09")
CALCULATED VERT. DEFL.(TL) = L/ 999 (0.22")

CANTILEVER DEFLECTION:
ALLOWABLE DEFL.(LL)= L/120 (0.19")
CALCULATED VERT. DEFL.(LL) = L/ 999 (0.01")
ALLOWABLE DEFL.(TL)= L/120 (0.19")
CALCULATED VERT. DEFL.(TL) = L/ 772 (0.02")

CSI: TC=0.45/1.00 (I-J:1) , BC=0.40/1.00 (S-T:1) , WB=0.86/1.00 (G-P:1) , SSI=0.19/1.00 (I-J:1)

DOL LUMBER=1.00 NAIL=1.00 LS BEND=1.10 COMP=1.10 SHEAR=1.10 TENS= 1.10

COMPANION LIVE LOAD FACTOR = 1.00

TRUSS PLATE MANUFACTURER IS NOT RESPONSIBLE FOR QUALITY CONTROL IN THE TRUSS MANUFACTURING PLANT .

NAIL VALUES

PLATE	GRIP(DRY) (PSI) MAX	MIN	SHEAR (PLI) MAX	MIN	SECTION (PLI) MAX	MIN
MT20	618	354	1667	788	1987	1656

PLATE PLACEMENT TOL. = 0.250 Inches

PLATE ROTATION TOL. = 5.0 Deg.

JSI GRIP= 0.89 (B) (INPUT = 0.90)
JSI METAL= 0.52 (J) (INPUT = 1.00)

A-18023548

CONTINUED ON PAGE 2

JOB NAME	TRUSS NAME	QUANTITY	PLY	JOB DESC.	DRWG NO.
292598	J1T	5	1	TRUSS DESC.	

Alpa Roof Truss, Maple

Version 8.200 S Jan 6 2018 MiTek Industries, Inc. Sat Feb 17 14:46:26 2018 Page 1
ID:MF8iiriaTok7DlbpT4B71Xys4PG-sOqG0QFy4YNpEKHjncfp1QfGYMcV8y5oQkAi7GzkDBh

Scale = 1:31.0

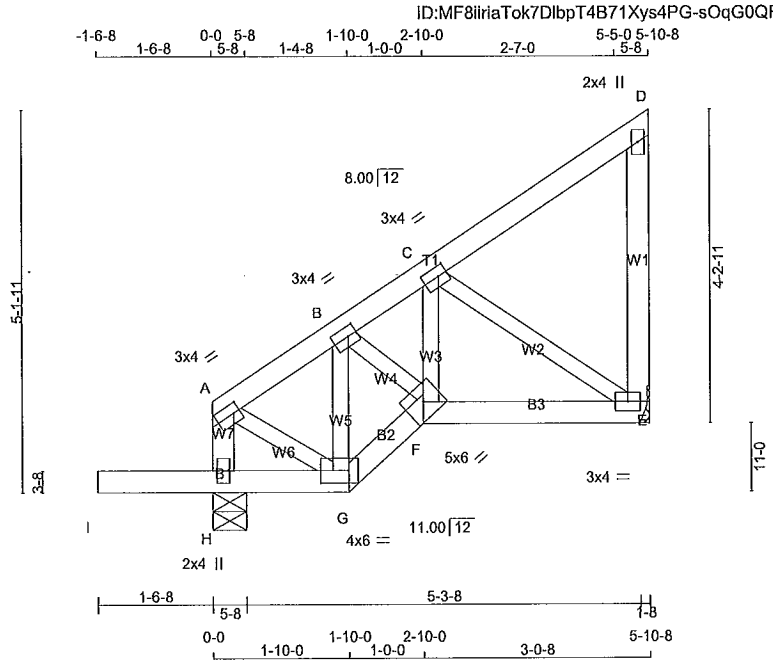

TOTAL WEIGHT = 5 X 30 = 150 lb

LUMBER
N. L. G. A. RULES

CHORDS	SIZE		LUMBER	DESCR.
H - A	2x4	DRY	No.2	SPF
A - D	2x4	DRY	No.2	SPF
E - D	2x4	DRY	No.2	SPF
I - G	2x4	DRY	No.2	SPF
G - F	2x4	DRY	No.2	SPF
F - E	2x4	DRY	No.2	SPF
ALL WEBS	2x3	DRY	No.2	SPF

DRY: SEASONED LUMBER.

PLATES (table is in inches)

JT	TYPE	PLATES	W	LEN	Y	X
A	TMVW-t	MT20	3.0	4.0	1.50	1.00
B	TMWW-t	MT20	3.0	4.0	1.50	1.50
C	TMWW-t	MT20	3.0	4.0	1.50	1.50
D	TMV+p	MT20	2.0	4.0		
E	BMVW1-t	MT20	3.0	4.0		
F	BBWW-h	MT20	5.0	6.0		
G	BBWW-l	MT20	4.0	6.0	2.00	4.50
H	BMV1+p	MT20	2.0	4.0		

NOTE: Lateral brace(s) shown shall be 1x4 for Part 9 design as per OBC 9.23.13.11, and no less than 2x4 for Part 4 design

REGISTERED PROFESSIONAL ENGINEER
02/17/2018
EDWIN C. FOK
PROVINCE OF ONTARIO

DIMENSIONS, SUPPORTS AND LOADINGS SPECIFIED BY FABRICATOR TO BE VERIFIED BY BUILDING DESIGNER

BEARINGS

JT	FACTORED GROSS REACTION VERT	HORZ	MAXIMUM FACTORED GROSS REACTION DOWN	HORZ	UPLIFT	INPUT BRG IN-SX	REQRD BRG IN-SX
H	452	0	452	0	0	5-8	1-8
E	264	0	264	0	0	HANGER BY OTHERS	
						MIN. SEAT SIZE: 1-8	

UNFACTORED REACTIONS

JT	1ST LCASE COMBINED	MAX./MIN. COMPONENT REACTIONS SNOW	LIVE	PERM.LIVE	WIND	DEAD	SOIL
H	322	197 / 0	0 / 0	0 / 0	0 / 0	125 / 0	0 / 0
E	188	115 / 0	0 / 0	0 / 0	0 / 0	73 / 0	0 / 0

BEARING MATERIAL TO BE SPF NO.2 OR BETTER AT JOINT(S) H

BRACING
TOP CHORD TO BE SHEATHED OR MAX. PURLIN SPACING = 6.25 FT.
MAX. UNBRACED BOTTOM CHORD LENGTH = 10.00 FT OR RIGID CEILING DIRECTLY APPLIED.

ALL PITCH BREAKS AND PERIMETER CORNER JOINTS MUST BE LATERALLY RESTRAINED.

LOADING
TOTAL LOAD CASES: (4)

CHORDS

MEMB. FR-TO	MAX. FACTORED FORCE (LBS)	FACTORED VERT. LOAD (PLF) FROM	TO	LC1 MAX CSI (LC)	MAX. UNBRAC LENGTH
H- A	-223 / 0	0.0	0.0	0.02 (1)	7.81
A- B	-165 / 0	-78.0	-78.0	0.04 (1)	6.25
B- C	-239 / 0	-78.0	-78.0	0.08 (1)	6.25
C- D	-11 / 0	-78.0	-78.0	0.08 (1)	6.25
E- D	-95 / 0	0.0	0.0	0.03 (1)	7.81
I- H	0 / 0	-96.5	-96.5	0.16 (1)	10.00
H- G	0 / 0	-18.5	-18.5	0.16 (1)	10.00
G- F	0 / 173	-18.5	-18.5	0.03 (1)	10.00
F- E	0 / 216	-18.5	-18.5	0.07 (4)	10.00

WEBS

MEMB. FR-TO	MAX. FACTORED FORCE (LBS)	MAX CSI (LC)
A- G	0 / 154	0.03 (1)
G- B	-220 / 0	0.03 (1)
B- F	0 / 130	0.03 (1)
F- C	0 / 63	0.02 (4)
C- E	-259 / 0	0.06 (1)

[M]

DESIGN CRITERIA

SPECIFIED LOADS:

TOP CH.	LL	=	21.0	PSF
	DL	=	6.0	PSF
BOT CH.	LL	=	0.0	PSF
	DL	=	7.4	PSF
TOTAL LOAD		=	34.4	PSF

SPACING = 24.0 IN. C/C

THIS TRUSS IS DESIGNED FOR RESIDENTIAL OR SMALL BUILDING REQUIREMENTS OF PART 9, NBCC 2010, NBCC 2015

THIS DESIGN COMPLIES WITH:
- PART 9 OF OBC 2012, OBC 2018
- CSA 086-09, CSA 086-14
- TPIC 2011, TPIC 2014

DESIGN ASSUMPTIONS
-OVERHANG NOT TO BE ALTERED OR CUT OFF.

(55 % OF 23.0 P.S.F. G.S.L. PLUS 8.4 P.S.F. RAIN LOAD) EQUALS 21.0 P.S.F. SPECIFIED ROOF LIVE LOAD

ALLOWABLE DEFL.(LL)= L/360 (0.20")
CALCULATED VERT. DEFL.(LL) = L/ 999 (0.00")
ALLOWABLE DEFL.(TL)= L/360 (0.20")
CALCULATED VERT. DEFL.(TL) = L/ 999 (0.01")

CANTILEVER DEFLECTION:
ALLOWABLE DEFL.(LL)= L/120 (0.19")
CALCULATED VERT. DEFL.(LL) = L/ 999 (0.02")
ALLOWABLE DEFL.(TL)= L/120 (0.19")
CALCULATED VERT. DEFL.(TL) = L/ 588 (0.03")

CSI: TC=0.08/1.00 (B-C:1) , BC=0.16/1.00 (G-H:1) , WB=0.06/1.00 (C-E:1) , SSI=0.12/1.00 (H-I:1)

DOL LUMBER=1.00 NAIL=1.00 LS BEND=1.10 COMP=1.10 SHEAR=1.10 TENS= 1.10

COMPANION LIVE LOAD FACTOR = 1.00

TRUSS PLATE MANUFACTURER IS NOT RESPONSIBLE FOR QUALITY CONTROL IN THE TRUSS MANUFACTURING PLANT .

NAIL VALUES

PLATE	GRIP(DRY) (PSI) MAX	MIN	SHEAR (PLI) MAX	MIN	SECTION (PLI) MAX	MIN
MT20	618	354	1667	788	1987	1656

PLATE PLACEMENT TOL. = 0.250 inches

PLATE ROTATION TOL. = 5.0 Deg.

JSI GRIP= 0.50 (A) (INPUT = 0.90)
JSI METAL= 0.08 (E) (INPUT = 1.00)

A-18023549

JOB NAME	TRUSS NAME	QUANTITY	PLY	JOB DESC.	DRWG NO.
292598	J1TA	1	1	TRUSS DESC.	

Alpa Roof Truss, Maple

Version 8.200 S Jan 6 2018 MiTek Industries, Inc. Sat Feb 17 14:42:06 2018 Page 1
ID:MF8iiriaTok7DlbpT4B71Xys4PG-UM7zSW6tJgci1NPIZ?_rVburtYtQDLSXeHBy?LzkDFI

Scale = 1:22.5

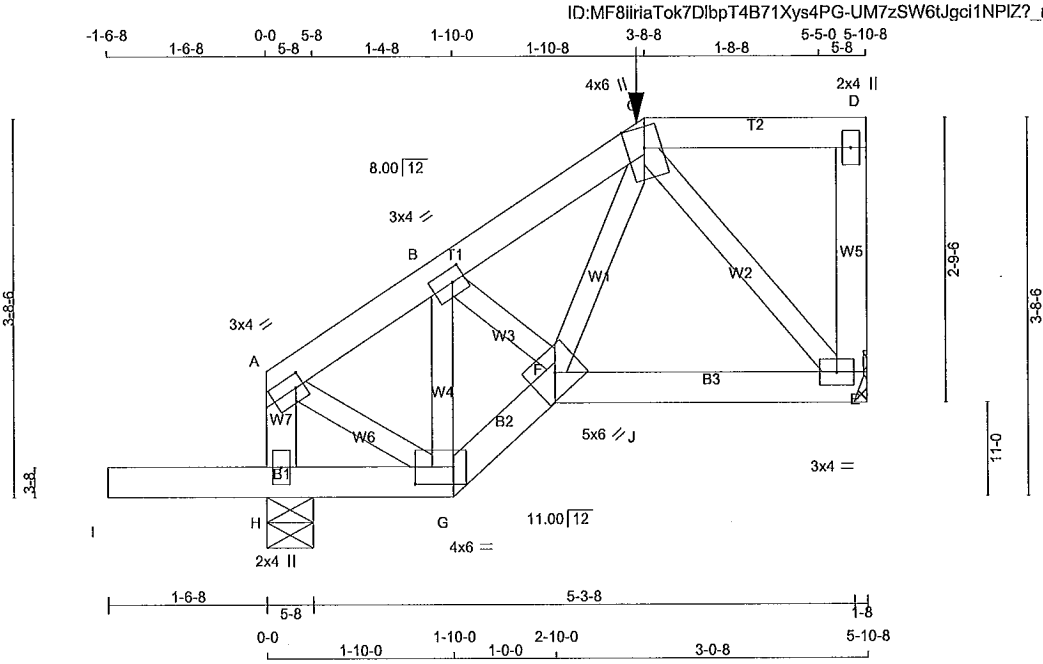

TOTAL WEIGHT = 28 lb

[M]

LUMBER

N. L. G. A. RULES

CHORDS	SIZE		LUMBER	DESCR.
A - C	2x4	DRY	No.2	SPF
C - D	2x4	DRY	No.2	SPF
E - D	2x4	DRY	No.2	SPF
H - A	2x4	DRY	No.2	SPF
I - G	2x4	DRY	No.2	SPF
G - F	2x4	DRY	No.2	SPF
F - E	2x4	DRY	No.2	SPF
ALL WEBS EXCEPT	2x3	DRY	No.2	SPF

DRY: SEASONED LUMBER.

PLATES (table is in inches)

JT	TYPE	PLATES	W	LEN	Y	X
A	TMVW-t	MT20	3.0	4.0	1.50	1.00
B	TMWW-t	MT20	3.0	4.0	1.50	1.50
C	TTWW+m	MT20	4.0	6.0	Edge	
D	TMV+p	MT20	2.0	4.0		
E	BMVW1-t	MT20	3.0	4.0		
F	BBWW-h	MT20	5.0	6.0		
G	BBWW-l	MT20	4.0	6.0	2.00	4.50
H	BMV1+p	MT20	2.0	4.0		

Edge - INDICATES REFERENCE CORNER OF PLATE TOUCHES EDGE OF CHORD.

HANGERS NOTES

1) SPECIAL HANGER(S) OR CONNECTION(S) REQUIRED TO SUPPORT CONCENTRATED LOAD(S) 106.4 lbs FACTORED DOWN AT 3-8-8 ON TOP CHORD. DESIGN FOR UNSPECIFIED CONNECTION(S) IS DELEGATED TO THE BUILDING DESIGNER.

NOTE: Lateral brace(s) shown shall be 1x4 for Part 9 design as per OBC 9.23.13.11, and no less than 2x4 for Part 4 design

REGISTERED PROFESSIONAL ENGINEER
02/17/2018
EDWIN C. FOK
PROVINCE OF ONTARIO

DIMENSIONS, SUPPORTS AND LOADINGS SPECIFIED BY FABRICATOR TO BE VERIFIED BY BUILDING DESIGNER

BEARINGS

JT	FACTORED GROSS REACTION VERT	HORZ	MAXIMUM FACTORED GROSS REACTION DOWN	HORZ	UPLIFT	INPUT BRG	REQRD BRG
E	413	0	413	0	0	IN-SX	IN-SX
						HANGER BY OTHERS	
						MIN. SEAT SIZE: 1-8	
H	527	0	527	0	0	5-8	1-8

UNFACTORED REACTIONS

JT	1ST LCASE COMBINED	MAX./MIN. COMPONENT REACTIONS SNOW	LIVE	PERM.LIVE	WIND	DEAD	SOIL
E	294	183 / 0	0 / 0	0 / 0	0 / 0	111 / 0	0 / 0
H	377	225 / 0	0 / 0	0 / 0	0 / 0	152 / 0	0 / 0

BEARING MATERIAL TO BE SPF NO.2 OR BETTER AT JOINT(S) H

BRACING

TOP CHORD TO BE SHEATHED OR MAX. PURLIN SPACING = 6.25 FT.
MAX. UNBRACED BOTTOM CHORD LENGTH = 10.00 FT OR RIGID CEILING DIRECTLY APPLIED.

ALL PITCH BREAKS AND PERIMETER CORNER JOINTS MUST BE LATERALLY RESTRAINED.

LOADING

TOTAL LOAD CASES: (4)

CHORDS

MEMB. FR-TO	MAX. FACTORED FORCE (LBS)	FACTORED VERT. LOAD (PLF) FROM	TO	LC1	MAX CSI (LC)	MAX. UNBRAC LENGTH
A- B	-243 / 0	-78.0	-78.0	0.04 (1)	6.25	
B- C	-339 / 0	-78.0	-78.0	0.04 (1)	6.25	
C- D	0 / 0	-111.3	-111.3	0.10 (1)	10.00	
E- D	-121 / 0	0.0	0.0	0.02 (1)	7.81	
H- A	-292 / 0	0.0	0.0	0.03 (1)	7.81	
I- H	0 / 0	-96.5	-96.5	0.17 (1)	10.00	
H- G	0 / 0	-26.4	-26.4	0.17 (1)	10.00	
G- F	0 / 261	-26.4	-26.4	0.05 (1)	10.00	
F- J	0 / 223	-26.4	-26.4	0.10 (4)	10.00	
J- E	0 / 223	-26.4	-26.4	0.10 (4)	10.00	

WEBS

MEMB. FR-TO	MAX. FACTORED FORCE (LBS)	MAX CSI (LC)
G- B	-302 / 0	0.05 (1)
B- F	0 / 118	0.03 (1)
F- C	0 / 157	0.04 (1)
C- E	-338 / 0	0.07 (1)
A- G	0 / 231	0.06 (1)

FACTORED CONCENTRATED LOADS (LBS)

JT	LOC.	LC1	MAX-	MAX+	FACE	DIR.	TYPE
C	3-8-8	-106	-106	---	FRONT	VERT	TOTAL

DESIGN CRITERIA

SPECIFIED LOADS:

TOP CH.	LL	=	21.0	PSF
	DL	=	6.0	PSF
BOT CH.	LL	=	0.0	PSF
	DL	=	7.4	PSF
TOTAL LOAD		=	34.4	PSF

SPACING = 24.0 IN. C/C

LOADING IN FLAT SECTION BASED ON A SLOPE OF 2.00/12 MINIMUM

GIRDER TYPE: CPrimeHip
LEFT SETBACK = 3-8-8
RIGHT SETBACK = 0-0
END SETBACK = 3-8-8
END WALL WIDTH = 0-0
CORNER FRAMING TYPE: CONVENTIONAL
END JACK TYPE: CONVENTIONAL
APPLIED TO FRONT SIDE
- ADDT'L LOADS BASED ON 55 % OF GSL.

THIS TRUSS IS DESIGNED FOR RESIDENTIAL OR SMALL BUILDING REQUIREMENTS OF PART 9, NBCC 2010, NBCC 2015

THIS DESIGN COMPLIES WITH:
- PART 9 OF OBC 2012, OBC 2018
- CSA 086-09, CSA 086-14
- TPIC 2011, TPIC 2014

DESIGN ASSUMPTIONS
-OVERHANG NOT TO BE ALTERED OR CUT OFF.

(55 % OF 23.0 P.S.F. G.S.L. PLUS 8.4 P.S.F. RAIN LOAD) EQUALS 21.0 P.S.F. SPECIFIED ROOF LIVE LOAD

ALLOWABLE DEFL.(LL)= L/360 (0.20")
CALCULATED VERT. DEFL.(LL) = L/ 999 (0.00")
ALLOWABLE DEFL.(TL)= L/360 (0.20")
CALCULATED VERT. DEFL.(TL) = L/ 999 (0.01")

CANTILEVER DEFLECTION:
ALLOWABLE DEFL.(LL)= L/120 (0.19")
CALCULATED VERT. DEFL.(LL) = L/ 999 (0.02")
ALLOWABLE DEFL.(TL)= L/120 (0.19")
CALCULATED VERT. DEFL.(TL) = L/ 617 (0.03")

CSI: TC=0.10/1.00 (C-D:1) , BC=0.17/1.00 (G-H:1) , WB=0.07/1.00 (C-E:1) , SSI=0.13/1.00 (H-I:1)

DOL LUMBER=1.00 NAIL=1.00 LS BEND=1.00 COMP=1.00 SHEAR=1.00 TENS= 1.00

COMPANION LIVE LOAD FACTOR = 1.00

TRUSS PLATE MANUFACTURER IS NOT RESPONSIBLE FOR QUALITY CONTROL IN THE TRUSS MANUFACTURING PLANT .

A-18023550

CONTINUED ON PAGE 2

JOB NAME	TRUSS NAME	QUANTITY	PLY	JOB DESC.	DRWG NO.
292598	J1TB	1	1	TRUSS DESC.	

Alpa Roof Truss, Maple

Version 8.200 S Jan 6 2018 MiTek Industries, Inc. Sat Feb 17 14:46:32 2018 Page 1
ID:MF8liriaTok7DlbpT4B71Xys4PG-hYCXHTKjfO7yyFkt8smDHhvI1nfvYfagogd0LwzkDBb

Scale = 1:30.5

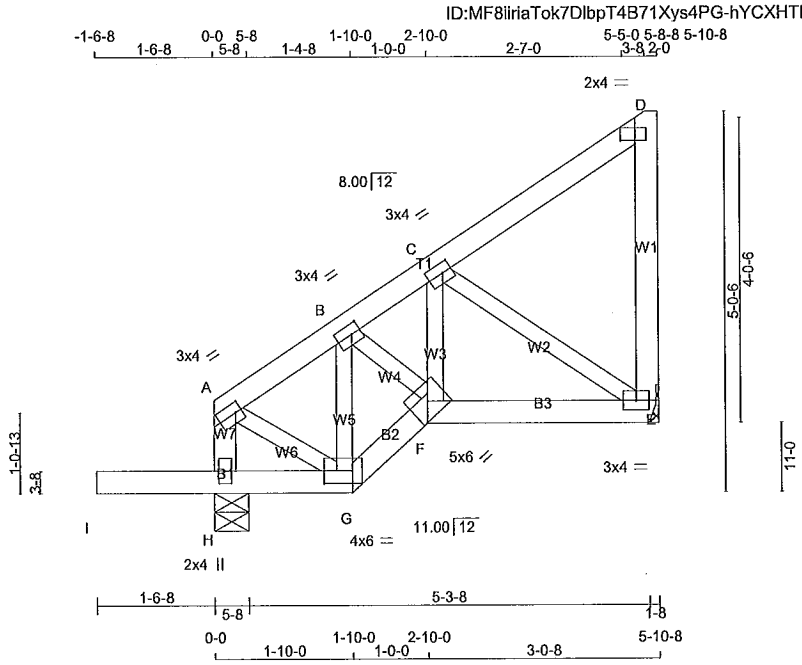

TOTAL WEIGHT = 30 lb

[M]

LUMBER

N. L. G. A. RULES

CHORDS	SIZE		LUMBER	DESCR.
A - D	2x4	DRY	No.2	SPF
E - D	2x4	DRY	No.2	SPF
H - A	2x4	DRY	No.2	SPF
I - G	2x4	DRY	No.2	SPF
G - F	2x4	DRY	No.2	SPF
F - E	2x4	DRY	No.2	SPF
ALL WEBS EXCEPT	2x3	DRY	No.2	SPF

DRY: SEASONED LUMBER.

PLATES (table is in inches)

JT	TYPE	PLATES	W	LEN	Y	X
A	TMVW-t	MT20	3.0	4.0	1.50	1.00
B	TMWW-t	MT20	3.0	4.0	1.50	1.50
C	TMWW-t	MT20	3.0	4.0	1.50	1.50
D	TVM-p	MT20	2.0	4.0	0.50	2.25
E	BMVW1-t	MT20	3.0	4.0		
F	BBWW-h	MT20	5.0	6.0		
G	BBWW-l	MT20	4.0	6.0	2.00	4.50
H	BMV1+p	MT20	2.0	4.0		

NOTE: Lateral brace(s) shown shall be 1x4 for Part 9 design as per OBC 9.23.13.11, and no less than 2x4 for Part 4 design

REGISTERED PROFESSIONAL ENGINEER
02/17/2018
EDWIN C. FOK
PROVINCE OF ONTARIO

DIMENSIONS, SUPPORTS AND LOADINGS SPECIFIED BY FABRICATOR TO BE VERIFIED BY BUILDING DESIGNER

BEARINGS

JT	FACTORED GROSS REACTION VERT	HORZ	MAXIMUM FACTORED GROSS REACTION DOWN	HORZ	UPLIFT	INPUT BRG IN-SX	REQRD BRG IN-SX
E	264	0	264	0	0	HANGER BY OTHERS MIN. SEAT SIZE: 1-8	
H	452	0	452	0	0	5-8	1-8

UNFACTORED REACTIONS

JT	1ST LCASE COMBINED	MAX./MIN. COMPONENT REACTIONS SNOW	LIVE	PERM.LIVE	WIND	DEAD	SOIL
E	188	115 / 0	0 / 0	0 / 0	0 / 0	73 / 0	0 / 0
H	322	197 / 0	0 / 0	0 / 0	0 / 0	125 / 0	0 / 0

BEARING MATERIAL TO BE SPF NO.2 OR BETTER AT JOINT(S) H

BRACING

TOP CHORD TO BE SHEATHED OR MAX. PURLIN SPACING = 6.25 FT.
MAX. UNBRACED BOTTOM CHORD LENGTH = 10.00 FT OR RIGID CEILING DIRECTLY APPLIED.

ALL PITCH BREAKS AND PERIMETER CORNER JOINTS MUST BE LATERALLY RESTRAINED.

LOADING

TOTAL LOAD CASES: (4)

CHORDS MEMB. FR-TO	MAX. FACTORED FORCE (LBS)	FACTORED VERT. LOAD (PLF) FROM	TO	LC1 CSI (LC)	MAX UNBRAC LENGTH	WEBS MEMB. FR-TO	MAX. FACTORED FORCE (LBS)	MAX CSI (LC)
A- B	-165 / 0	-78.0	-78.0	0.04 (1)	6.25	G- B	-220 / 0	0.03 (1)
B- C	-239 / 0	-78.0	-78.0	0.08 (1)	6.25	B- F	0 / 130	0.03 (1)
C- D	-11 / 0	-78.0	-78.0	0.08 (1)	6.25	F- C	0 / 63	0.02 (4)
E- D	-95 / 0	0.0	0.0	0.03 (1)	7.81	C- E	-259 / 0	0.06 (1)
H- A	-223 / 0	0.0	0.0	0.02 (1)	7.81	A- G	0 / 154	0.03 (1)
I- H	0 / 0	-96.5	-96.5	0.16 (1)	10.00			
H- G	0 / 0	-18.5	-18.5	0.16 (1)	10.00			
G- F	0 / 173	-18.5	-18.5	0.03 (1)	10.00			
F- E	0 / 216	-18.5	-18.5	0.07 (4)	10.00			

DESIGN CRITERIA

SPECIFIED LOADS:

TOP CH.	LL	=	21.0	PSF
	DL	=	6.0	PSF
BOT CH.	LL	=	0.0	PSF
	DL	=	7.4	PSF
TOTAL LOAD		=	34.4	PSF

SPACING = 24.0 IN. C/C

THIS TRUSS IS DESIGNED FOR RESIDENTIAL OR SMALL BUILDING REQUIREMENTS OF PART 9, NBCC 2010, NBCC 2015

THIS DESIGN COMPLIES WITH:
- PART 9 OF OBC 2012, OBC 2018
- CSA 086-09, CSA 086-14
- TPIC 2011, TPIC 2014

DESIGN ASSUMPTIONS
-OVERHANG NOT TO BE ALTERED OR CUT OFF.

(55 % OF 23.0 P.S.F. G.S.L. PLUS 8.4 P.S.F. RAIN LOAD) EQUALS 21.0 P.S.F. SPECIFIED ROOF LIVE LOAD

ALLOWABLE DEFL.(LL)= L/360 (0.20")
CALCULATED VERT. DEFL.(LL) = L/ 999 (0.00")
ALLOWABLE DEFL.(TL)= L/360 (0.20")
CALCULATED VERT. DEFL.(TL) = L/ 999 (0.01")

CANTILEVER DEFLECTION:
ALLOWABLE DEFL.(LL)= L/120 (0.19")
CALCULATED VERT. DEFL.(LL) = L/ 999 (0.02")
ALLOWABLE DEFL.(TL)= L/120 (0.19")
CALCULATED VERT. DEFL.(TL) = L/ 588 (0.03")

CSI: TC=0.08/1.00 (B-C:1) , BC=0.16/1.00 (G-H:1) , WB=0.06/1.00 (C-E:1) , SSI=0.12/1.00 (H-I:1)

DOL LUMBER=1.00 NAIL=1.00 LS BEND=1.10 COMP=1.10 SHEAR=1.10 TENS= 1.10

COMPANION LIVE LOAD FACTOR = 1.00

TRUSS PLATE MANUFACTURER IS NOT RESPONSIBLE FOR QUALITY CONTROL IN THE TRUSS MANUFACTURING PLANT .

NAIL VALUES

PLATE	GRIP(DRY) (PSI) MAX	MIN	SHEAR (PLI) MAX	MIN	SECTION (PLI) MAX	MIN
MT20	618	354	1667	788	1987	1656

PLATE PLACEMENT TOL. = 0.250 inches

PLATE ROTATION TOL. = 5.0 Deg.

JSI GRIP= 0.50 (A) (INPUT = 0.90)
JSI METAL= 0.08 (D) (INPUT = 1.00)

A-18023551

STRACON ENGINEERING INC.

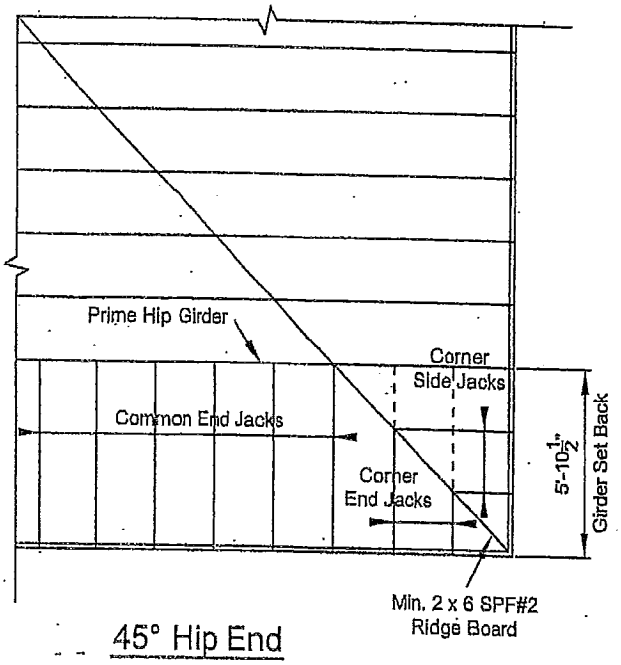

45° Hip End

LUMBER SPECIFICATION

TOP CHORD : 2 x 4 SPF#2
BOTTOM CHORD : 2 x 4 SPF#2
WEBS : 2 x 3 SPF#2
UNLESS OTHERWISE SHOWN

DESIGN LOAD

TOP CHORD SNOW LOAD	:	40.5 P.S.F.
TOP CHORD DEAD LOAD	:	3.0 P.S.F.
BOTTOM CHORD LIVE LOAD	:	0.0 P.S.F.
BOTTOM CHORD DEAD LOAD	:	7.0 P.S.F.
TOTAL LOAD	:	50.5 P.S.F

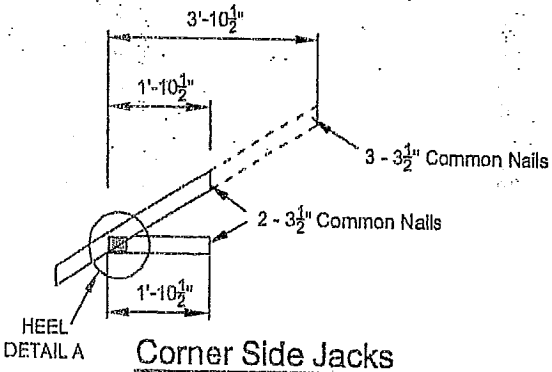

Corner Side Jacks

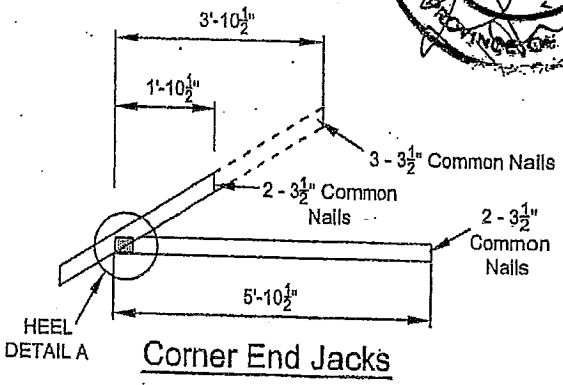

Corner End Jacks

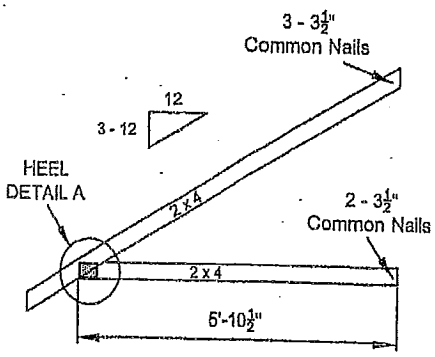

Common End Jacks

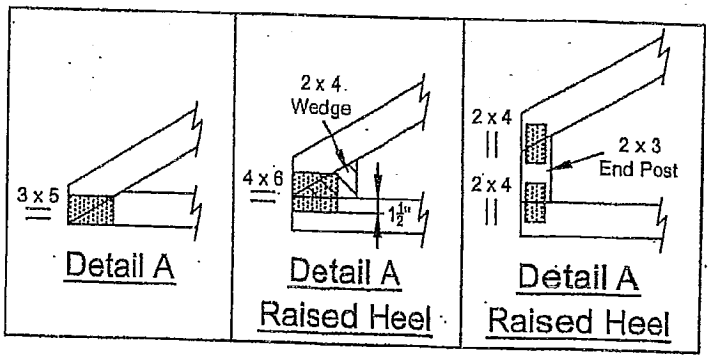

NOTE: DESIGN CONFORMS TO PART 9, O.B.C. 2012 (L.S.D. DESIGN)

CS-51008

STRACON ENGINEERING INC.

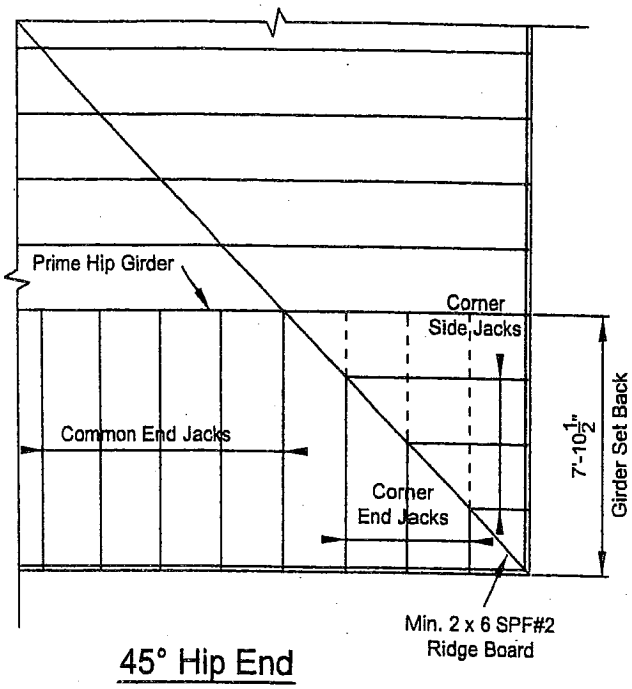

45° Hip End

LUMBER SPECIFICATION

TOP CHORD : 2 x 4 SPF#2
BOTTOM CHORD : 2 x 4 SPF#2
WEBS : 2 x 3 SPF#2
UNLESS OTHERWISE SHOWN

DESIGN LOAD

TOP CHORD SNOW LOAD	:	34.8 P.S.F.
TOP CHORD DEAD LOAD	:	3.0 P.S.F.
BOTTOM CHORD LIVE LOAD	:	0.0 P.S.F.
BOTTOM CHORD DEAD LOAD	:	7.0 P.S.F.
TOTAL LOAD	:	44.8 P.S.F

REGISTERED PROFESSIONAL ENGINEER
Sept 29
E. FOK
PROVINCE OF ONTARIO

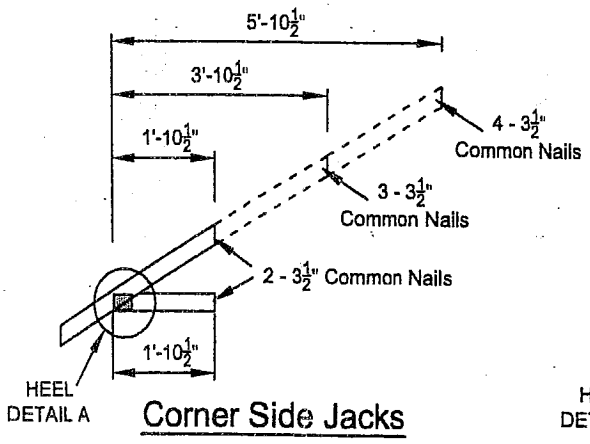

Corner Side Jacks

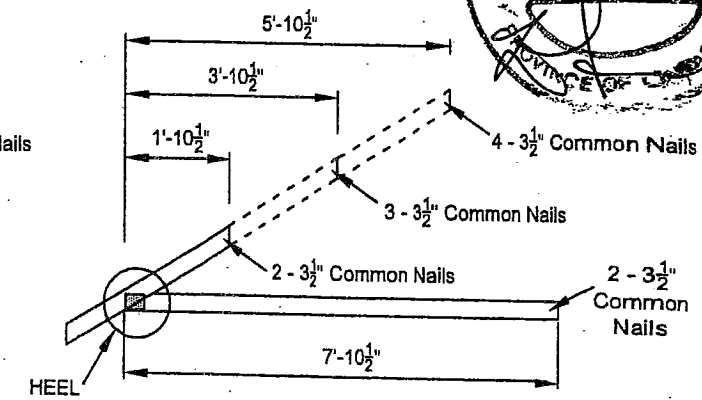

Corner End Jacks

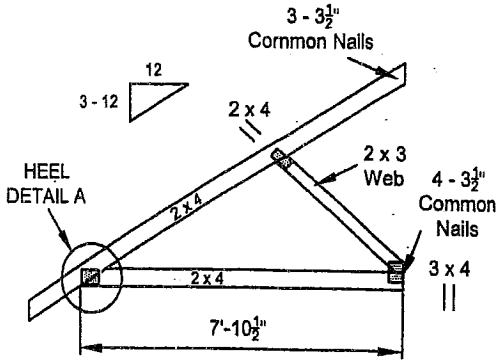

Common End Jacks

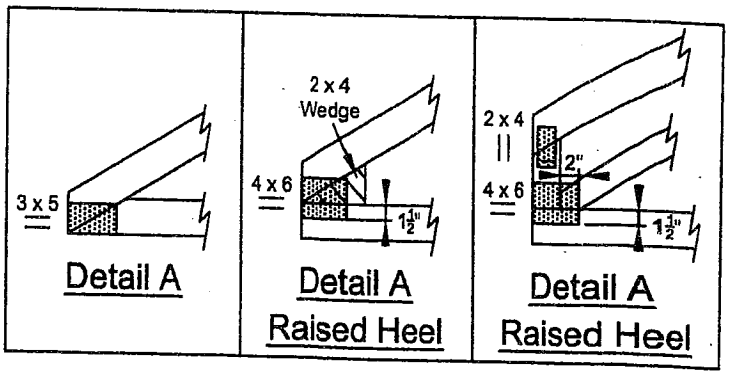

NOTE: DESIGN CONFORMS TO PART 9, O.B.C. 2012 (L.S.D. DESIGN)

CS-71008N

TECHNICAL BULLETIN

LUS – Double Shear Joist Hangers

SIMPSON Strong-Tie®

All LUS hangers have double shear nailing. This patented innovation distributes the load through two points on each joist nail for greater strength. It also allows the use of fewer nails, faster installation and the use of common nails for all connections.

Material: 18 gauge

Finish: G90 galvanized

Design:

- Factored resistances are in accordance with CSA O86-14.
- Uplift resistances have been increased 15%. No further increase is permitted.
- Wood shear is not considered in the factored resistances given. The specifier must ensure that the joist and header capacities are capable of withstanding these loads.

Installation:

- Use all specified fasteners.
- Nails: 16d = 0.162" dia. x 3½" long common wire, 10d = 0.148" x 3" long common wire.
- Double shear nails must be driven at an angle through the joist or truss into the header to achieve the table loads.
- Not designed for welded or nailer applications.

Options:

- These hangers cannot be modified

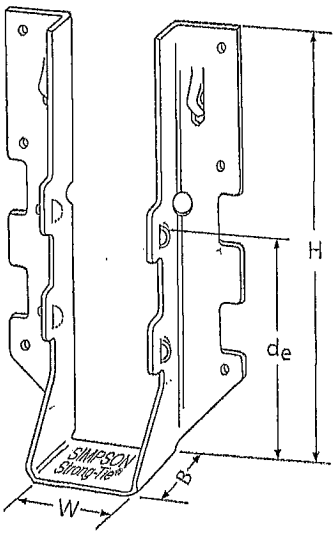

LUS28

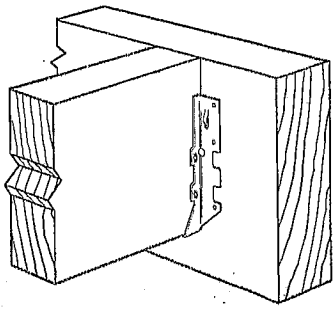

Typical LUS Installation

Model No.	Ga.	Dimensions (in.)				Fasteners		Factored Resistance (lb.)			
								D.Fir-L		S-P-F	
		W	H	B	d_e[1]	Face	Joist	Uplift (K_D=1.15)	Normal (K_D=1.00)	Uplift (K_D=1.15)	Normal (K_D=1.00)
LUS24	18	1 9/16	3 1/8	1 3/4	1 15/16	(4) 10d	(2) 10d	710	1630	645	1155
LUS24-2	18	3 1/8	3 1/8	2	1 15/16	(4) 16d	(2) 16d	835	2020	590	1435
LUS26	18	1 9/16	4 3/4	1 3/4	3 5/8	(4) 10d	(4) 10d	1420	2170	1290	1630
LUS26-2	18	3 1/8	4 7/8	2	4	(4) 16d	(4) 16d	1720	2595	1545	1920
LUS26-3	18	4 5/8	4 3/16	2	3 1/4	(4) 16d	(4) 16d	1720	2595	1545	2340
LUS28	18	1 9/16	6 5/8	1 3/4	3 3/4	(6) 10d	(6) 10d	1420	2520	1290	1790
LUS28-2	18	3 1/8	7	2	4	(6) 16d	(4) 16d	1720	3325	1545	2575
LUS28-3	18	4 5/8	6 1/4	2	3 1/4	(6) 16d	(4) 16d	1720	3325	1545	2375
LUS210	18	1 9/16	7 13/16	1 3/4	3 7/8	(8) 10d	(4) 10d	1420	2785	1290	2210
LUS210-2	18	3 1/8	9	2	6	(8) 16d	(6) 16d	2580	4500	2320	3195
LUS210-3	18	4 5/8	8 3/16	2	5 1/4	(8) 16d	(6) 16d	2580	3345	2320	2375

1. d_e is the distance from the seat of the hanger to the highest joist nail.

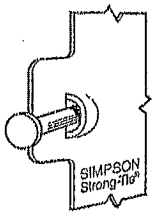

Dome Double Shear Nailing prevents tabs breaking off (available on some models).

U.S. Patent 5,603,580

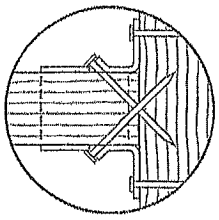

Double Shear Nailing Top View.

LICENSED PROFESSIONAL ENGINEER
4/5/2017
B. D. BUNTING
PROVINCE OF ONTARIO

LIMIT STATES DESIGN

This technical bulletin is effective until June 30, 2019, and reflects information available as of March 1, 2017. This information is updated periodically and should not be relied upon after June 30, 2019. Contact Simpson Strong-Tie for current information and limited warranty or see strongtie.com.

© 2017 Simpson Strong-Tie Company Inc.

T-SPECLUS17 3/17 exp. 6/19

(800) 999-5099
strongtie.com

TECHNICAL BULLETIN

HHUS – Double Shear Joist Hangers

SIMPSON Strong-Tie®

All HHUS hangers have double shear nailing. This patented innovation distributes the load through two points on each joist nail for greater strength. It also allows the use of fewer nails, faster installation and the use of common nails for all connections. Do not bend or remove tabs.

Material: 14 gauge

Finish: G90 galvanized

Design:

- Factored resistances are in accordance with CSA O86-14.
- Uplift resistances have been increased 15%. No further increase is permitted.
- Wood shear is not considered in the factored resistances given. The specifier must ensure that the joist and header capacities are capable of withstanding these loads.

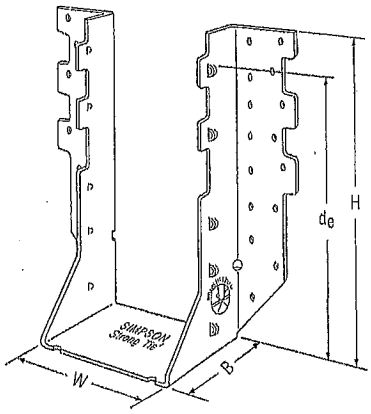

HHUS410

Installation:

- Use all specified fasteners
- Nails: 16d = 0.162" dia. x 3½" long common wire
- Double shear nails must be driven at an angle through the joist or truss into the header to achieve the table loads
- Not designed for welded or nailer applications

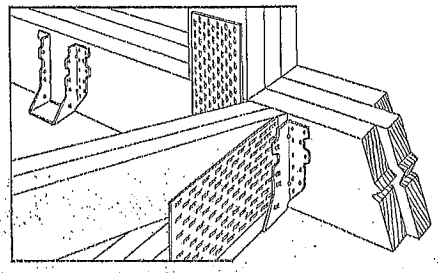

Typical HHUS Installation (Truss Designer to provide fastener quantity for connecting multiple members together)

Options:

- See current catalogue for options

Model No.	Ga.	Dimensions (in.)				Fasteners		Factored Resistance (lb.)			
								D.Fir-L		S-P-F	
		W	H	B	d_e[1]	Face	Joist	Uplift (K_D=1.15)	Normal (K_D=1.00)	Uplift (K_D=1.15)	Normal (K_D=1.00)
HHUS26-2	14	3 5/16	5 13/16	3	3 15/16	(14) 16d	(6) 16d	2850	7335	2065	5205
HHUS28-2	14	3 5/16	7 7/32	3	6 5/32	(22) 16d	(8) 16d	3765	8940	2675	6345
HHUS210-2	14	3 5/16	9 3/32	3	8	(30) 16d	(10) 16d	4745	9660	4310	7000
HHUS210-3	14	4 11/16	9	3	7 15/16	(30) 16d	(10) 16d	4745	10545	4310	7485
HHUS210-4	14	6 1/8	8 29/32	3	7 27/32	(30) 16d	(10) 16d	4745	10545	4310	7485
HHUS46	14	3 5/8	5 13/32	3	3 15/16	(14) 16d	(6) 16d	2540	7335	2065	5205
HHUS48	14	3 5/8	7 1/8	3	6 1/8	(22) 16d	(8) 16d	3765	8945	2267	6345
HHUS410	14	3 5/8	9	3	8	(30) 16d	(10) 16d	4745	9855	4310	7000
HHUS5.50/10	14	5 1/2	9	3	8	(30) 16d	(10) 16d	4745	10545	4310	7485
HHUS7.25/10	14	7 1/4	9	3 5/16	7 29/32	(30) 16d	(10) 16d	4745	10770	4310	7650

1. d_e is the distance from the seat of the hanger to the highest joist nail.

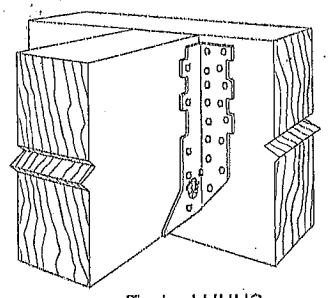

Typical HHUS Installation

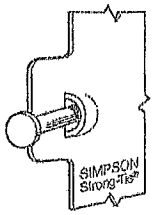

Dome Double Shear Nailing prevents tabs breaking off (available on some models).

U.S. Patent 5,603,580

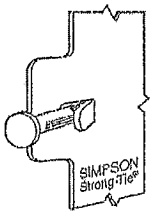

Double Shear Nailing Side View. Do not bend tab back.

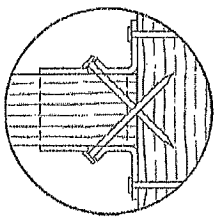

Double Shear Nailing Top View.

LICENSED PROFESSIONAL ENGINEER
4/3/2017
B. D. BUNTING
PROVINCE OF ONTARIO

LIMIT STATES DESIGN

This technical bulletin is effective until June 30, 2019, and reflects information available as of March 1, 2017. This information is updated periodically and should not be relied upon after June 30, 2019. Contact Simpson Strong-Tie for current information and limited warranty or see strongtie.com.

© 2017 Simpson Strong-Tie Company Inc.

T-SPECHHUS17 3/17 exp. 6/19

(800) 999-5099
strongtie.com

TC – Truss Connectors

SIMPSON Strong-Tie®

The TC truss connector is an ideal connector for scissor trusses and can allow horizontal movement up to 1¼". The TC also attaches plated trusses to top plates or sill plates to resist uplift forces. Typically used on one or both ends of truss as determined by the building designer.

Material: 16 gauge

Finish: G90 galvanized

Design: Factored resistances are in accordance with CSA 086-14

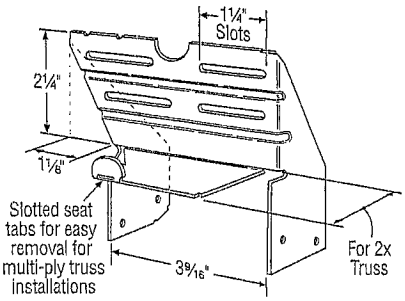

TC24
U.S. Patent 4,932,173

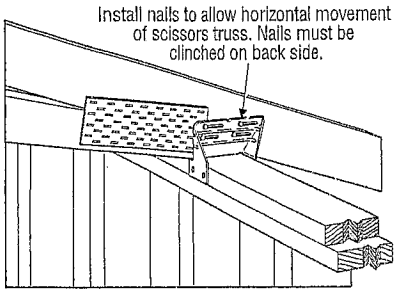

Typical TC24 Installation

Installation:

- Use all specified fasteners.
- Nails: 10d = 0.148" dia. x 3" long common wire, 10d x 1½ = 0.148" dia. x 1½" long.
- Drive 10d nails into the truss at the inside end of the slotted holes (inside end is towards the centre of the truss) and clinch on the back side. Do not seat these nails into the truss–allow room under the nail head for movement of the truss with respect to the wall.

Optional TC Installation:

- Bend one flange up 90°. Drive specified nails into the top and face of the top plates or install Titen® screws into the top and face of masonry wall. See optional load tables and installation details.

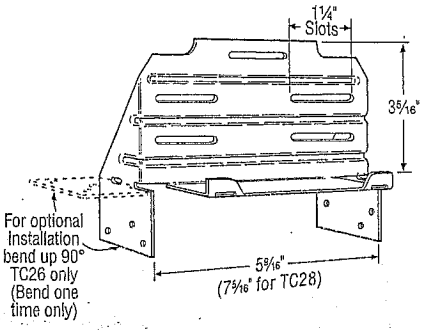

TC26
(TC28 Similar)

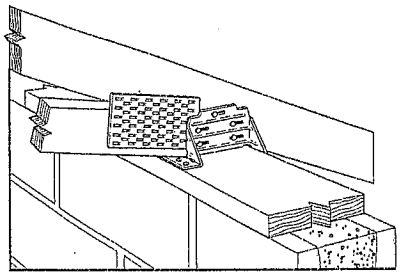

Optional TC26 Installation for Grouted Concrete Block using a Wood Nailer
(8", 10", 12" Wall Installation Similar)

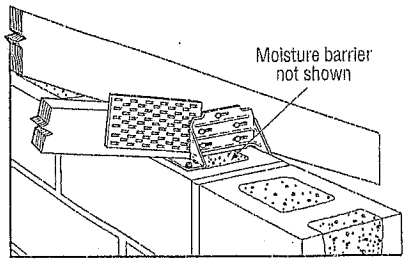

Optional TC26 Installation for Grouted Concrete Block using Titen Screws

Model No.	Fasteners		Factored Resistance	
	Truss	Wall Plates	D.Fir-L	S-P-F
			Uplift (K_D=1.15)	Uplift (K_D=1.15)
			lb.	lb.
TC24	(4) 10d	(4) 10d	605	430
TC26	(5) 10d	(6) 10d	1015	720
TC28	(5) 10d	(6) 10d	1015	720

1. Factored resistances have been increased 15% for earthquake or wind loading; no further increase allowed; reduce where other loads govern.
2. Grout strength is 15 MPa minimum.
3. Optional TC26 installation with 10d nails requires minimum 3" top plate thickness.
4. TC26 fastened to grouted concrete block with (6) – ⅜" x 2¼" Titen screws has a factored uplift resistance of 275 lb.

Optional TC Installation Table

Model No.	Fasteners		Factored Resistance	
	Truss	Wall Plates	D.Fir-L	S-P-F
			Uplift (K_D=1.15)	Uplift (K_D=1.15)
			lb.	lb.
TC26	(5) 10d	(6) 10d x 1½"	810	660
	(5) 10d	(6) 10d	930	660

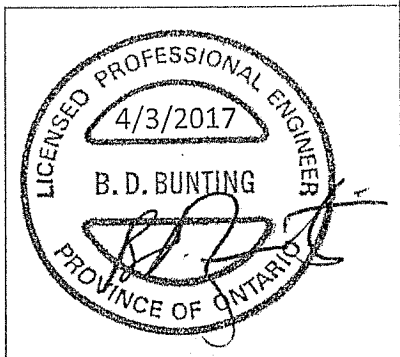

LIMIT STATES DESIGN

This technical bulletin is effective until June 30, 2019, and reflects information available as of March 1, 2017. This information is updated periodically and should not be relied upon after June 30, 2019. Contact Simpson Strong-Tie for current information and limited warranty or see strongtie.com.

© 2017 Simpson Strong-Tie Company Inc.

(800) 999-5099
strongtie.com