ALPA-BARRIE

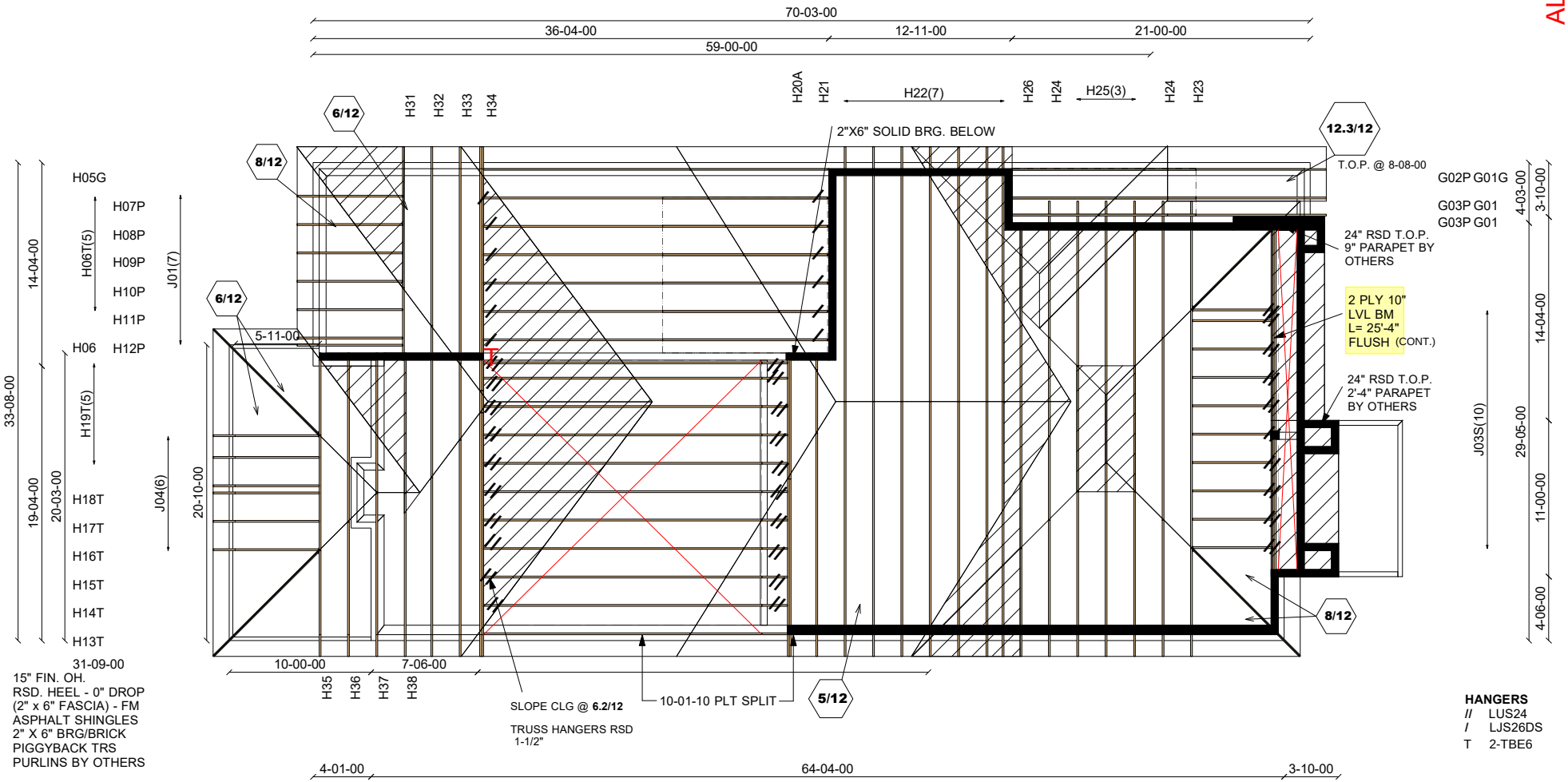

15" FIN. OH.
RSD. HEEL - 0" DROP
(2" x 6" FASCIA) - FM
ASPHALT SHINGLES
2" X 6" BRG/BRICK
PIGGYBACK TRS
PURLINS BY OTHERS

LOFT WALL
SUPPORTED BY OTHERS

HANGERS

//	LUS24
/	LJS26DS
T	2-TBE6

E22052685 - E22052693
E22052701 - E22052704
E22052709 - E22052733

Mitek V. 8.2.0

ALL CONVENTIONAL FRAMING TO CONFORM WITH PART 9 O.B.C. LATEST EDITION. ROOF RAFTERS THAT CROSS OVER TRUSSES TO BE 2X4 SPF #2 @ 24" O.C WITH A VERT. POST TO THE TRUSS UNDERNEATH AT EACH CROSS POINT. VERT. POSTS LONGER THAN 6' TO HAVE LATERAL BRACING SO THAT THE DISTANCE BETWEEN END POINTS & BETWEEN ROWS OF BRACING DOES NOT EXCEED 6'

CONVENTIONAL FRAMING BY OTHERS

Job Track: 45147	Builder / Location: GOLD PARK HOMES / VAUGHAN	Model / Elevation: 4201 / C LOGGIA	
Layout ID: 343192	Project: PINE VALLEY PH 2	THESE DRAWINGS CONSTITUTE THE PROPERTY OF ALPA ROOF TRUSSES INC., SHALL NOT BE REPRODUCED, PUBLISHED, OR REDISTRIBUTED IN ANY MANNER OR UTILIZED FOR ANY PURPOSE OTHER THAN THE MANUFACTURE OF TRUSSES BY ALPA ROOF TRUSSES INC AND WILL BE RETRACTED BY ALPA ROOF TRUSSES INC IF UTLILZED FOR ANY OTHER PURPOSE.	
Plan Log: 116408	Date: 2022-04-04 / Designer: AMANDA		

EWP DESIGN INC.

(905) 832-2250 FAX (905) 832-0286

RESPONSIBILITIES AND SPECIFICATIONS

RESPONSIBILITIES

1. EWP DESIGN INC. is responsible for the design of trusses as individual components.
2. It is the responsibility of others to ascertain that the design loads utilized on each drawing meet or exceed the actual dead load imposed by the structure, the live load imposed by the intended use and the snow load imposed by local building code or authorities with jurisdictions.
3. All dimensions are to be verified by the owner, contractor, architect or other authorities with jurisdictions before truss fabrication.
4. EWP DESIGN INC. bears no responsibility for the erection of trusses. Persons erecting trusses are cautioned to seek professional advice regarding the temporary and permanent bracing for the system. Bracing shown on EWP DESIGN INC. drawing is specified for the truss as a component only and forms an integral part of the truss design.
5. It is the truss manufacturer's responsibility to ensure that trusses are manufactured in conformance with specifications of EWP DESIGN INC. as outlined below.

SPECIFICATIONS

1. Trusses designed by EWP DESIGN INC. conform to the relevant section of the Ontario Building Code of Canada (Part 9 or Part 4) or to the Canadian code for farm buildings, whichever applies to the building type, as indicated on the EWP DESIGN INC. drawings, and conform to the design procedures established by the Truss Plate Institute of Canada. Unit stresses used for truss designs are as per the edition of CSA-O86 shown on EWP DESIGN INC. drawings.
2. Lumber is to be the size, species and grade as specified on EWP DESIGN INC. drawings.
3. Moisture content of lumber shall not exceed 19% in service unless specified otherwise.
4. Metal connector plates shall be applied to both faces of truss at each joint and shall be positioned as specified.
5. Top chords of trusses are assumed to be continuously braced laterally by roof sheathing or by purlins at intervals not exceeding 12.5 times the thickness of top chord member.
6. Bottom chords shall be laterally braced at intervals not exceeding 3M (10') o.c., where rigid ceiling is not applied directly to the underside of chords.

THESE DRAWINGS CONSTITUTE THE PROPERTY OF EWP DESIGN INC., SHALL NOT BE REPRODUCED, PUBLISHED, OR REDISTRIBUTED IN ANY MANNER OR UTILIZED FOR ANY PURPOSE OTHER THAN THE MANUFACTURE OF TRUSSES BY THE ALPA LUMBER GROUP, AND WILL BE RETRACTED BY EWP DESIGN INC. IF UTILIZED FOR ANY OTHER PURPOSE.

JOB NAME	TRUSS NAME	QUANTITY	PLY	JOB DESC.	DRWG NO.
343192	H31		1	TRUSS DESC. JT 45147	E22052685

Alpa Roof Truss, Maple

Version 8.530 S Feb 23 2022 MiTek Industries, Inc. Tue Jun 7 14:07:59 2022 Page 1
ID:MF8iiriaTok7DlbpT4B71Xys4PG-n7Xt1LlqWrfh0CPTntcqR18EmpsCW5bH9VMzdOz8fy_

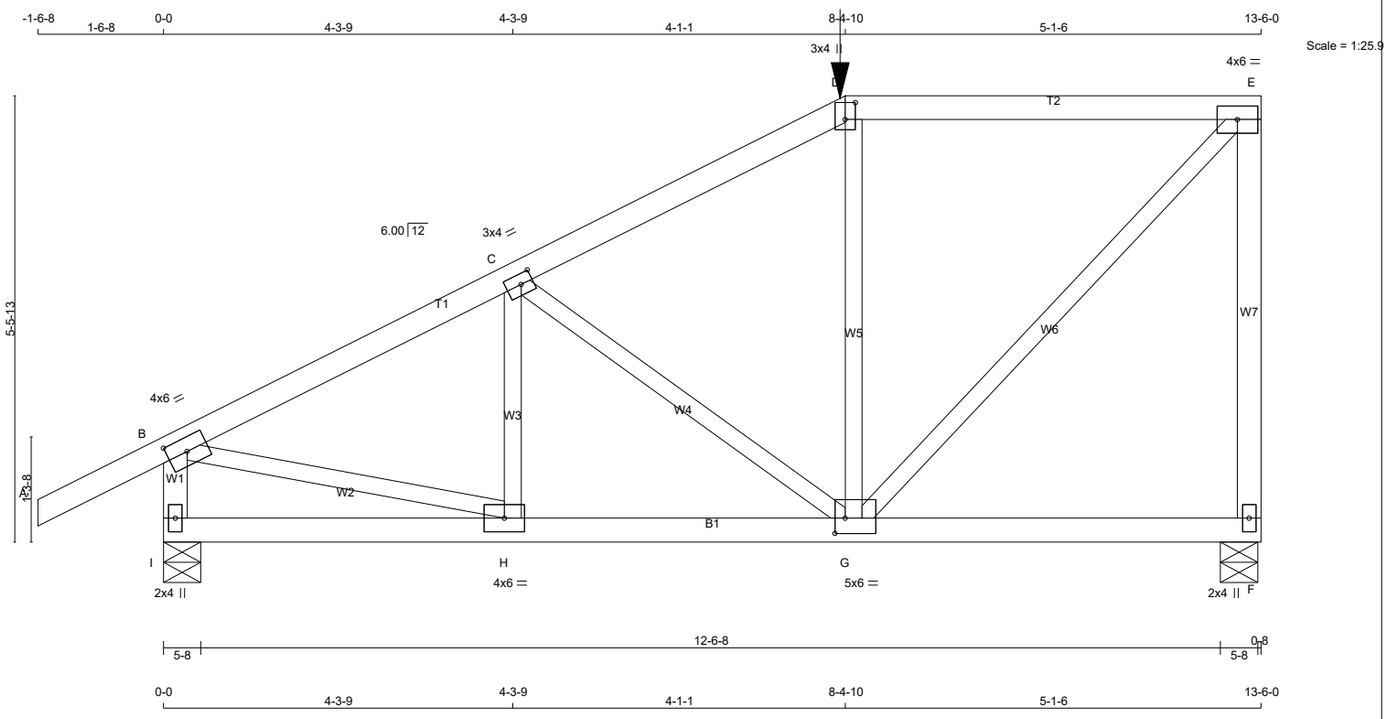

TOTAL WEIGHT = 60 lb

[M]

LUMBER
N. L. G. A. RULES

CHORDS	SIZE		LUMBER	DESCR.
A - D	2x4	DRY	No.2	SPF
D - E	2x4	DRY	No.2	SPF
F - E	2x4	DRY	No.2	SPF
I - B	2x4	DRY	No.2	SPF
I - F	2x4	DRY	No.2	SPF
ALL WEBS EXCEPT	2x3	DRY	No.2	SPF

DRY: SEASONED LUMBER.

PLATES (table is in inches)

JT	TYPE	PLATES	W	LEN	Y	X
B	TMVW-t	MT20	4.0	6.0	2.00	3.00
C	TMWW-t	MT20	3.0	4.0	1.50	1.75
D	TTW+p	MT20	3.0	4.0	2.50	1.50
E	TMVW-t	MT20	4.0	6.0		
F	BMV1+p	MT20	2.0	4.0		
G	BMWWW-t	MT20	5.0	6.0	2.25	1.50
H	BMWW-t	MT20	4.0	6.0		
I	BMV1+p	MT20	2.0	4.0		

LATERAL BRACE(S) SHOWN SHALL BE 2X4 SPF#2

LICENSED PROFESSIONAL ENGINEER
V. WIDYA
100225448
06/07/2022
PROVINCE OF ONTARIO

DIMENSIONS, SUPPORTS AND LOADINGS SPECIFIED BY FABRICATOR TO BE VERIFIED BY BUILDING DESIGNER

BEARINGS

JT	FACTORED GROSS REACTION VERT	HORZ	MAXIMUM FACTORED GROSS REACTION DOWN	HORZ	UPLIFT	INPUT BRG IN-SX	REQRD BRG IN-SX
F	1381	0	1381	0	0	5-8	1-8
I	1151	0	1151	0	0	5-8	1-8

UNFACTORED REACTIONS

JT	1ST LCASE COMBINED	MAX./MIN. COMPONENT REACTIONS SNOW	LIVE	PERM.LIVE	WIND	DEAD	SOIL
F	983	611 / 0	0 / 0	0 / 0	0 / 0	371 / 0	0 / 0
I	823	487 / 0	0 / 0	0 / 0	0 / 0	336 / 0	0 / 0

BEARING MATERIAL TO BE SPF NO.2 OR BETTER AT JOINT(S) F, I

BRACING
TOP CHORD TO BE SHEATHED OR MAX. PURLIN SPACING = 4.80 FT.
MAX. UNBRACED BOTTOM CHORD LENGTH = 10.00 FT OR RIGID CEILING DIRECTLY APPLIED.

ALL PITCH BREAKS AND PERIMETER CORNER JOINTS MUST BE LATERALLY RESTRAINED.

LOADING
TOTAL LOAD CASES: (4)

CHORDS

MEMB. FR-TO	MAX. FACTORED FORCE (LBS)	FACTORED VERT. LOAD (PLF) FROM	TO	LC1 CSI (LC)	MAX UNBRAC LENGTH
A- B	0 / 28	-78.0	-78.0	0.16 (1)	10.00
B- C	-1254 / 0	-78.0	-78.0	0.28 (1)	5.38
C- D	-1016 / 0	-78.0	-78.0	0.26 (1)	5.85
D- E	-882 / 0	-153.5	-153.5	0.80 (1)	4.80
F- E	-1305 / 0	0.0	0.0	0.71 (1)	7.03
I- B	-1084 / 0	0.0	0.0	0.12 (1)	7.55
I- H	0 / 0	-36.4	-36.4	0.15 (4)	10.00
H- G	0 / 1136	-36.4	-36.4	0.34 (4)	10.00
G- F	0 / 0	-36.4	-36.4	0.21 (4)	10.00

WEBS

MEMB. FR-TO	MAX. FACTORED FORCE (LBS)	MAX CSI (LC)
H- C	-101 / 73	0.03 (4)
C- G	-304 / 0	0.14 (1)
G- D	-543 / 0	0.25 (1)
G- E	0 / 1270	0.31 (1)
B- H	0 / 1165	0.29 (1)

FACTORED CONCENTRATED LOADS (LBS)

JT	LOC.	LC1	MAX-	MAX+	FACE	DIR.	TYPE	HEEL	CONN.
D	8-4-10	-477	-477	---	FRONT	VERT	TOTAL	---	C1

CONNECTION REQUIREMENTS

1) **C1:** A SUITABLE HANGER/MECHANICAL CONNECTION IS REQUIRED.

DESIGN CRITERIA

SPECIFIED LOADS:

TOP CH.	LL	=	21.0	PSF
	DL	=	6.0	PSF
BOT CH.	LL	=	0.0	PSF
	DL	=	7.4	PSF
TOTAL LOAD		=	34.4	PSF

SPACING = 24.0 IN. C/C

LOADING IN FLAT SECTION BASED ON A SLOPE OF 2.00/12 MINIMUM

GIRDER TYPE: CPrimeHip
LEFT SETBACK = 8-4-10
RIGHT SETBACK = 0-0
END SETBACK = 5-10-8
END WALL WIDTH = 0-0
CORNER FRAMING TYPE: CONVENTIONAL
END JACK TYPE: CONVENTIONAL
APPLIED TO FRONT SIDE
- ADDT'L LOADS BASED ON 55 % OF GSL.

THIS TRUSS IS DESIGNED FOR RESIDENTIAL OR SMALL BUILDING REQUIREMENTS OF PART 9, NBCC 2015

THIS DESIGN COMPLIES WITH:
- PART 9 OF BCBC 2018 , ABC 2019
- PART 9 OF OBC 2012 (2019 AMENDMENT)
- CSA 086-14
- TPIC 2014

(55 % OF 23.0 P.S.F. G.S.L. PLUS 8.4 P.S.F. RAIN LOAD) EQUALS 21.0 P.S.F. SPECIFIED ROOF LIVE LOAD

ALLOWABLE DEFL.(LL)= L/360 (0.45")
CALCULATED VERT. DEFL.(LL) = L/ 999 (0.02")
ALLOWABLE DEFL.(TL)= L/360 (0.45")
CALCULATED VERT. DEFL.(TL) = L/ 999 (0.06")

CSI: TC=0.80/1.00 (D-E:1) , BC=0.34/1.00 (G-H:4) , WB=0.31/1.00 (E-G:1) , SSI=0.34/1.00 (D-E:1)

DOL LUMBER=1.00 NAIL=1.00 LS BEND=1.00 COMP=1.00 SHEAR=1.00 TENS= 1.00

COMPANION LIVE LOAD FACTOR = 1.00

TRUSS PLATE MANUFACTURER IS NOT RESPONSIBLE FOR QUALITY CONTROL IN THE TRUSS MANUFACTURING PLANT .

NAIL VALUES

PLATE	GRIP(DRY) (PSI) MAX	MIN	SHEAR (PLI) MAX	MIN	SECTION (PLI) MAX	MIN
MT20	650	371	1747	788	1987	1873

PLATE PLACEMENT TOL. = 0.250 inches

PLATE ROTATION TOL. = 5.0 Deg.

JSI GRIP= 0.87 (E) (INPUT = 0.90)
JSI METAL= 0.31 (B) (INPUT = 1.00)

JOB NAME	TRUSS NAME	QUANTITY	PLY	JOB DESC.	DRWG NO.
343192	H32		1	TRUSS DESC. JT 45147	E22052686

Alpa Roof Truss, Maple

Version 8.530 S Feb 23 2022 MiTek Industries, Inc. Tue Jun 7 14:08:01 2022 Page 1

ID:MF8iiriaTok7DlbpT4B71Xys4PG-jVeeS0J42SvPFWZsuIeIWSDqfcXw_ymZcpr4qGz8fxy

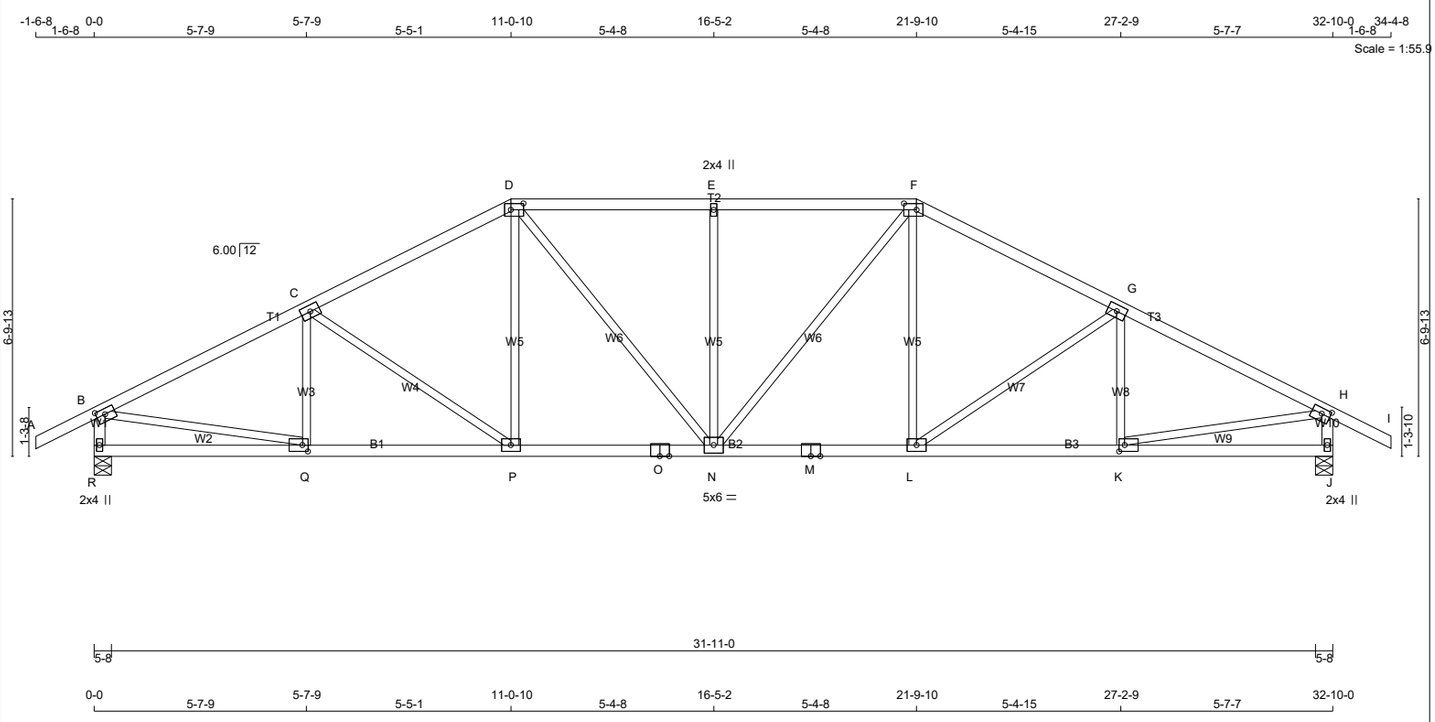

TOTAL WEIGHT = 137 lb

[M][F]

LUMBER

N. L. G. A. RULES

CHORDS	SIZE		LUMBER	DESCR.
A - D	2x4	DRY	No.2	SPF
D - F	2x4	DRY	No.2	SPF
F - I	2x4	DRY	No.2	SPF
R - B	2x4	DRY	No.2	SPF
J - H	2x4	DRY	No.2	SPF
R - O	2x4	DRY	No.2	SPF
O - M	2x4	DRY	No.2	SPF
M - J	2x4	DRY	No.2	SPF
ALL WEBS EXCEPT	2x3	DRY	No.2	SPF

DRY: SEASONED LUMBER.

PLATES (table is in inches)

JT	TYPE	PLATES	W	LEN	Y	X
B	TMVW-t	MT20	4.0	6.0	1.75	2.75
C	TMWW-t	MT20	4.0	6.0		
D	TTWW-l	MT20	4.0	6.0	2.00	4.00
E	TMW+w	MT20	2.0	4.0		
F	TTWW-l	MT20	4.0	6.0	2.00	4.00
G	TMWW-t	MT20	4.0	6.0		
H	TMVW-t	MT20	4.0	6.0	1.75	2.75
J	BMV1+p	MT20	2.0	4.0		
K	BMWW-t	MT20	4.0	6.0	2.00	1.75
L	BMWW-t	MT20	4.0	6.0		
M	BS-t	MT20	4.0	6.0		
N	BMWWW-t	MT20	5.0	6.0		
O	BS-t	MT20	4.0	6.0		
P	BMWW-t	MT20	4.0	6.0		
Q	BMWW-t	MT20	4.0	6.0	2.00	1.75
R	BMV1+p	MT20	2.0	4.0		

LATERAL BRACE(S) SHOWN SHALL BE 2X4 SPF#2

LICENSED PROFESSIONAL ENGINEER
V. WIDYA
100225448
06/07/2022
PROVINCE OF ONTARIO

DIMENSIONS, SUPPORTS AND LOADINGS SPECIFIED BY FABRICATOR TO BE VERIFIED BY BUILDING DESIGNER

BEARINGS

JT	FACTORED GROSS REACTION VERT	HORZ	MAXIMUM FACTORED GROSS REACTION DOWN	HORZ	UPLIFT	INPUT BRG IN-SX	REQRD BRG IN-SX
R	1709	0	1709	0	0	5-8	2-1
J	1709	0	1709	0	0	5-8	2-1

UNFACTORED REACTIONS

JT	1ST LCASE COMBINED	MAX./MIN. COMPONENT REACTIONS SNOW	LIVE	PERM.LIVE	WIND	DEAD	SOIL
R	1216	757 / 0	0 / 0	0 / 0	0 / 0	459 / 0	0 / 0
J	1216	757 / 0	0 / 0	0 / 0	0 / 0	459 / 0	0 / 0

BEARING MATERIAL TO BE SPF NO.2 OR BETTER AT JOINT(S) R, J

BRACING

TOP CHORD TO BE SHEATHED OR MAX. PURLIN SPACING = 4.21 FT.
MAX. UNBRACED BOTTOM CHORD LENGTH = 10.00 FT OR RIGID CEILING DIRECTLY APPLIED.

ALL PITCH BREAKS AND PERIMETER CORNER JOINTS MUST BE LATERALLY RESTRAINED.

LOADING

TOTAL LOAD CASES: (4)

CHORDS

MEMB. FR-TO	MAX. FACTORED FORCE (LBS)	FACTORED VERT. LOAD (PLF) FROM	TO	LC1 CSI (LC)	MAX UNBRAC LENGTH
A- B	0 / 28	-78.0	-78.0	0.14 (1)	10.00
B- C	-2245 / 0	-78.0	-78.0	0.39 (1)	4.21
C- D	-2020 / 0	-78.0	-78.0	0.36 (1)	4.43
D- E	-2038 / 0	-78.0	-78.0	0.34 (1)	4.42
E- F	-2038 / 0	-78.0	-78.0	0.34 (1)	4.42
F- G	-2018 / 0	-78.0	-78.0	0.36 (1)	4.43
G- H	-2239 / 0	-78.0	-78.0	0.39 (1)	4.22
H- I	0 / 28	-78.0	-78.0	0.14 (1)	10.00
R- B	-1664 / 0	0.0	0.0	0.17 (1)	6.43
J- H	-1664 / 0	0.0	0.0	0.17 (1)	6.43
R- Q	0 / 0	-18.5	-18.5	0.12 (4)	10.00
Q- P	0 / 2028	-18.5	-18.5	0.39 (1)	10.00
P- O	0 / 1789	-18.5	-18.5	0.35 (1)	10.00
O- N	0 / 1789	-18.5	-18.5	0.35 (1)	10.00
N- M	0 / 1788	-18.5	-18.5	0.35 (1)	10.00
M- L	0 / 1788	-18.5	-18.5	0.35 (1)	10.00
L- K	0 / 2022	-18.5	-18.5	0.39 (1)	10.00
K- J	0 / 0	-18.5	-18.5	0.12 (4)	10.00

WEBS

MEMB. FR-TO	MAX. FACTORED FORCE (LBS)	MAX CSI (LC)
Q- C	-245 / 0	0.06 (1)
C- P	-295 / 0	0.24 (1)
P- D	0 / 270	0.06 (1)
D- N	0 / 391	0.09 (1)
N- E	-512 / 0	0.40 (1)
N- F	0 / 393	0.09 (1)
F- L	0 / 268	0.06 (1)
L- G	-290 / 0	0.24 (1)
K- G	-249 / 0	0.06 (1)
B- Q	0 / 2058	0.46 (1)
K- H	0 / 2053	0.46 (1)

DESIGN CRITERIA

SPECIFIED LOADS:

TOP CH.	LL	=	21.0	PSF
	DL	=	6.0	PSF
BOT CH.	LL	=	0.0	PSF
	DL	=	7.4	PSF
TOTAL LOAD		=	34.4	PSF

SPACING = 24.0 IN. C/C

LOADING IN FLAT SECTION BASED ON A SLOPE OF 2.00/12 MINIMUM

THIS TRUSS IS DESIGNED FOR RESIDENTIAL OR SMALL BUILDING REQUIREMENTS OF PART 9, NBCC 2015

THIS DESIGN COMPLIES WITH:
- PART 9 OF BCBC 2018 , ABC 2019
- PART 9 OF OBC 2012 (2019 AMENDMENT)
- CSA 086-14
- TPIC 2014

(55 % OF 23.0 P.S.F. G.S.L. PLUS 8.4 P.S.F. RAIN LOAD) EQUALS 21.0 P.S.F. SPECIFIED ROOF LIVE LOAD

ALLOWABLE DEFL.(LL)= L/360 (1.09")
CALCULATED VERT. DEFL.(LL) = L/ 999 (0.10")
ALLOWABLE DEFL.(TL)= L/360 (1.09")
CALCULATED VERT. DEFL.(TL) = L/ 999 (0.20")

CSI: TC=0.39/1.00 (B-C:1) , BC=0.39/1.00 (P-Q:1) , WB=0.46/1.00 (B-Q:1) , SSI=0.20/1.00 (D-E:1)

DOL LUMBER=1.00 NAIL=1.00 LS BEND=1.10 COMP=1.10 SHEAR=1.10 TENS= 1.10

COMPANION LIVE LOAD FACTOR = 1.00

TRUSS PLATE MANUFACTURER IS NOT RESPONSIBLE FOR QUALITY CONTROL IN THE TRUSS MANUFACTURING PLANT .

NAIL VALUES

PLATE	GRIP(DRY) (PSI) MAX	MIN	SHEAR (PLI) MAX	MIN	SECTION (PLI) MAX	MIN
MT20	650	371	1747	788	1987	1873

PLATE PLACEMENT TOL. = 0.250 inches

PLATE ROTATION TOL. = 5.0 Deg.

JSI GRIP= 0.88 (B) (INPUT = 0.90)
JSI METAL= 0.57 (B) (INPUT = 1.00)

JOB NAME	TRUSS NAME	QUANTITY	PLY	JOB DESC.	DRWG NO.
343192	H33		1	TRUSS DESC. JT 45147	E22052687

Alpha Roof Truss, Maple

Version 8.530 S Feb 23 2022 MiTek Industries, Inc. Tue Jun 7 14:08:02 2022 Page 1
ID:MF8iiriaTok7DlbpT4B71Xys4PG-BhC0fMKjpm1Gtg82S?9X2fmod0sNjPxjrTadDiz8fxx

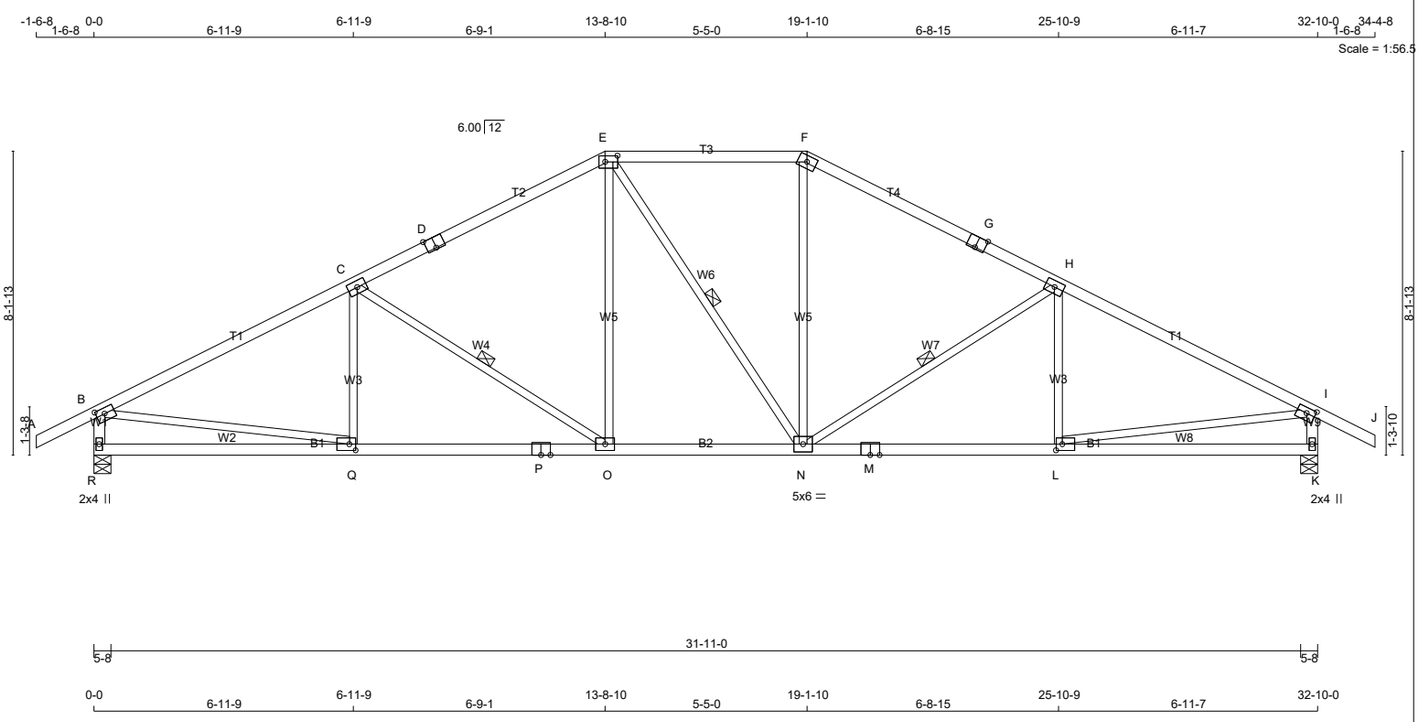

TOTAL WEIGHT = 135 lb

[M][F]

LUMBER

N. L. G. A. RULES

CHORDS	SIZE		LUMBER	DESCR.
A - D	2x4	DRY	No.2	SPF
D - E	2x4	DRY	No.2	SPF
E - F	2x4	DRY	No.2	SPF
F - G	2x4	DRY	No.2	SPF
G - J	2x4	DRY	No.2	SPF
R - B	2x4	DRY	No.2	SPF
K - I	2x4	DRY	No.2	SPF
R - P	2x4	DRY	No.2	SPF
P - M	2x4	DRY	No.2	SPF
M - K	2x4	DRY	No.2	SPF
ALL WEBS EXCEPT	2x3	DRY	No.2	SPF

DRY: SEASONED LUMBER.

PLATES (table is in inches)

JT	TYPE	PLATES	W	LEN	Y	X
B	TMVW-t	MT20	4.0	6.0	1.75	2.75
C	TMWW-t	MT20	4.0	6.0		
D	TS-t	MT20	4.0	6.0	Edge	3.00
E	TTWW-l	MT20	4.0	6.0	2.00	4.00
F	TTW-h	MT20	4.0	6.0		
G	TS-t	MT20	4.0	6.0	Edge	3.00
H	TMWW-t	MT20	4.0	6.0		
I	TMVW-t	MT20	4.0	6.0	1.75	2.75
K	BMV1+p	MT20	2.0	4.0		
L	BMWW-t	MT20	4.0	6.0	2.00	2.00
M	BS-t	MT20	4.0	6.0		
N	BMWWW-t	MT20	5.0	6.0		
O	BMWW-t	MT20	4.0	6.0		
P	BS-t	MT20	4.0	6.0		
Q	BMWW-t	MT20	4.0	6.0	2.00	2.00
R	BMV1+p	MT20	2.0	4.0		

Edge - INDICATES REFERENCE CORNER OF PLATE TOUCHES EDGE OF CHORD.

LATERAL BRACE(S) SHOWN SHALL BE 2X4 SPF#2

DIMENSIONS, SUPPORTS AND LOADINGS SPECIFIED BY FABRICATOR TO BE VERIFIED BY BUILDING DESIGNER

BEARINGS

JT	FACTORED GROSS REACTION VERT	HORZ	MAXIMUM FACTORED GROSS REACTION DOWN	HORZ	UPLIFT	INPUT BRG IN-SX	REQRD BRG IN-SX
R	1709	0	1709	0	0	5-8	2-1
K	1709	0	1709	0	0	5-8	2-1

UNFACTORED REACTIONS

JT	1ST LCASE COMBINED	MAX./MIN. COMPONENT REACTIONS SNOW	LIVE	PERM.LIVE	WIND	DEAD	SOIL
R	1216	757 / 0	0 / 0	0 / 0	0 / 0	459 / 0	0 / 0
K	1216	757 / 0	0 / 0	0 / 0	0 / 0	459 / 0	0 / 0

BEARING MATERIAL TO BE SPF NO.2 OR BETTER AT JOINT(S) R, K

BRACING

TOP CHORD TO BE SHEATHED OR MAX. PURLIN SPACING = 3.91 FT.
MAX. UNBRACED BOTTOM CHORD LENGTH = 10.00 FT OR RIGID CEILING DIRECTLY APPLIED.

ALL PITCH BREAKS AND PERIMETER CORNER JOINTS MUST BE LATERALLY RESTRAINED.

1 LATERAL BRACE(S) AT 1/ 2 LENGTH OF C-O, E-N, H-N.

END VERTICAL(S) MUST BE SHEATHED OR HAVE BRACES AS INDICATED IN THE MAX. UNBRACED LENGTH COLUMN OF THE TABLE BELOW

LOADING

TOTAL LOAD CASES: (4)

CHORDS

MEMB. FR-TO	MAX. FACTORED FORCE (LBS)	FACTORED VERT. LOAD LC1 (PLF) FROM	TO	MAX CSI (LC)	MAX. UNBRAC LENGTH
A- B	0 / 28	-78.0	-78.0	0.14 (1)	10.00
B- C	-2277 / 0	-78.0	-78.0	0.63 (1)	3.91
C- D	-1833 / 0	-78.0	-78.0	0.56 (1)	4.33
D- E	-1833 / 0	-78.0	-78.0	0.56 (1)	4.33
E- F	-1618 / 0	-78.0	-78.0	0.33 (1)	4.85
F- G	-1833 / 0	-78.0	-78.0	0.56 (1)	4.34
G- H	-1833 / 0	-78.0	-78.0	0.56 (1)	4.34
H- I	-2272 / 0	-78.0	-78.0	0.63 (1)	3.91
I- J	0 / 28	-78.0	-78.0	0.14 (1)	10.00
R- B	-1656 / 0	0.0	0.0	0.17 (1)	6.44
K- I	-1656 / 0	0.0	0.0	0.17 (1)	6.44
R- Q	0 / 0	-18.5	-18.5	0.21 (4)	10.00
Q- P	0 / 2062	-18.5	-18.5	0.44 (1)	10.00
P- O	0 / 2062	-18.5	-18.5	0.44 (1)	10.00
O- N	0 / 1618	-18.5	-18.5	0.33 (1)	10.00
N- M	0 / 2057	-18.5	-18.5	0.43 (1)	10.00
M- L	0 / 2057	-18.5	-18.5	0.43 (1)	10.00
L- K	0 / 0	-18.5	-18.5	0.21 (4)	10.00

WEBS

MEMB. FR-TO	MAX. FACTORED FORCE (LBS)	MAX CSI (LC)
Q- C	-148 / 51	0.05 (1)
C- O	-536 / 0	0.24 (1)
O- E	0 / 399	0.09 (1)
E- N	0 / 0	0.00 (1)
N- F	0 / 399	0.09 (1)
N- H	-531 / 0	0.24 (1)
L- H	-152 / 50	0.05 (1)
B- Q	0 / 2083	0.47 (1)
L- I	0 / 2078	0.47 (1)

DESIGN CRITERIA

SPECIFIED LOADS:

TOP CH.	LL	=	21.0	PSF
	DL	=	6.0	PSF
BOT CH.	LL	=	0.0	PSF
	DL	=	7.4	PSF
TOTAL LOAD		=	34.4	PSF

SPACING = 24.0 IN. C/C

LOADING IN FLAT SECTION BASED ON A SLOPE OF 2.00/12 MINIMUM

THIS TRUSS IS DESIGNED FOR RESIDENTIAL OR SMALL BUILDING REQUIREMENTS OF PART 9, NBCC 2015

THIS DESIGN COMPLIES WITH:
- PART 9 OF BCBC 2018 , ABC 2019
- PART 9 OF OBC 2012 (2019 AMENDMENT)
- CSA 086-14
- TPIC 2014

(55 % OF 23.0 P.S.F. G.S.L. PLUS 8.4 P.S.F. RAIN LOAD) EQUALS 21.0 P.S.F. SPECIFIED ROOF LIVE LOAD

ALLOWABLE DEFL.(LL)= L/360 (1.09")
CALCULATED VERT. DEFL.(LL) = L/ 999 (0.10")
ALLOWABLE DEFL.(TL)= L/360 (1.09")
CALCULATED VERT. DEFL.(TL) = L/ 999 (0.21")

CSI: TC=0.63/1.00 (B-C:1) , BC=0.44/1.00 (O-Q:1) , WB=0.47/1.00 (B-Q:1) , SSI=0.23/1.00 (B-C:1)

DOL LUMBER=1.00 NAIL=1.00 LS BEND=1.10 COMP=1.10 SHEAR=1.10 TENS= 1.10

COMPANION LIVE LOAD FACTOR = 1.00

TRUSS PLATE MANUFACTURER IS NOT RESPONSIBLE FOR QUALITY CONTROL IN THE TRUSS MANUFACTURING PLANT .

NAIL VALUES

PLATE	GRIP(DRY) (PSI) MAX	MIN	SHEAR (PLI) MAX	MIN	SECTION (PLI) MAX	MIN
MT20	650	371	1747	788	1987	1873

PLATE PLACEMENT TOL. = 0.250 inches

PLATE ROTATION TOL. = 5.0 Deg.

JSI GRIP= 0.89 (B) (INPUT = 0.90)
JSI METAL= 0.58 (B) (INPUT = 1.00)

JOB NAME	TRUSS NAME	QUANTITY	PLY	JOB DESC.	DRWG NO.
343192	H34		2	TRUSS DESC. JT 45147	E22052688

Alpha Roof Truss, Maple

Version 8.530 S Feb 23 2022 MiTek Industries, Inc. Tue Jun 7 14:07:58 2022 Page 1

ID:MF8iiriaTok7DlbpT4B71Xys4PG-JwzVq?HClXXqO3qHDA5bupbAIPTynVj7wrcQ5xz8fy?

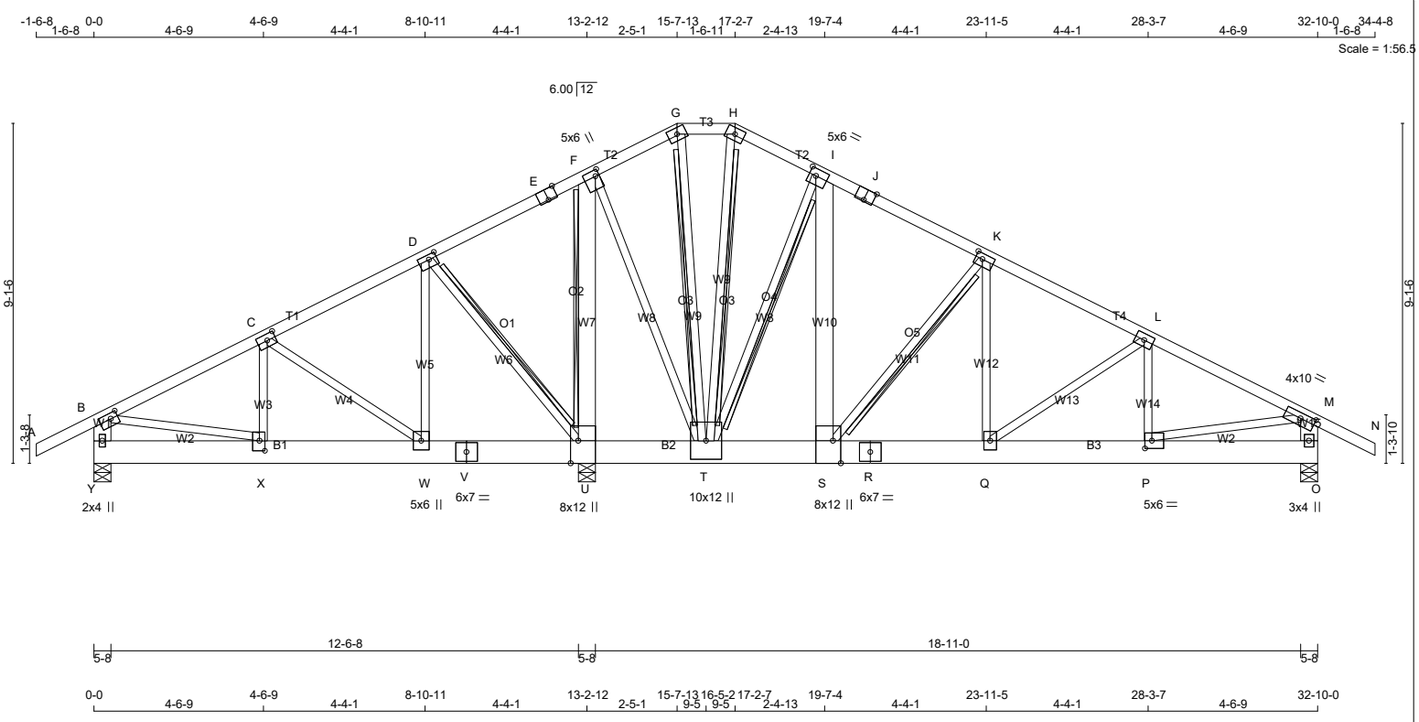

LUMBER

N. L. G. A. RULES

CHORDS	SIZE		LUMBER	DESCR.
A - E	2x4	DRY	No.2	SPF
E - G	2x4	DRY	No.2	SPF
G - H	2x4	DRY	No.2	SPF
H - J	2x4	DRY	No.2	SPF
J - N	2x4	DRY	No.2	SPF
Y - B	2x6	DRY	No.2	SPF
O - M	2x6	DRY	No.2	SPF
Y - V	2x8	DRY	No.2	SPF
V - R	2x8	DRY	No.2	SPF
R - O	2x8	DRY	No.2	SPF
ALL WEBS	2x3	DRY	No.2	SPF
EXCEPT				
U - F	2x6	DRY	No.2	SPF
S - I	2x6	DRY	No.2	SPF

DRY: SEASONED LUMBER.

DESIGN CONSISTS OF 2 TRUSSES BUILT SEPARATELY THEN FASTENED TOGETHER AS FOLLOWS:

CHORDS #ROWS	SURFACE SPACING (IN)	LOAD(PLF)
TOP CHORDS : (0.122"X3") SPIRAL NAILS		
A- E 1	12	TOP
E- G 1	12	TOP
G- H 1	12	TOP
H- J 1	12	TOP
J- N 1	12	TOP
Y- B 2	12	TOP
O- M 2	12	TOP
BOTTOM CHORDS : (0.122"X3") SPIRAL NAILS		
Y- V 2	9	SIDE(268.3)
V- R 2	9	SIDE(268.3)
R- O 2	9	SIDE(234.1)
WEBS : (0.122"X3") SPIRAL NAILS		
2x3 1	6	
2x6 2	6	

NAILS TO BE DRIVEN FROM ONE SIDE ONLY.

TOP - COMPONENTS ARE LOADED FROM THE TOP AND MUST BE PLACED ON TOP EDGE OF ALL PLIES FOR THE LOAD TO BE TRANSFERRED TO EACH PLY.

SIDE - PLF SHOWN IS THE EQUIVALENT UDL APPLIED TO ONE SIDE THAT THE CORRESPONDING NAILING PATTERN SHALL BE CAPABLE OF TRANSFERING. REMAINING PLF MUST BE APPLIED ON THE OPPOSITE SIDE OR ON THE TOP.

PLATES (table is in inches)

JT	TYPE	PLATES	W	LEN	Y	X
B	TMVW-t	MT20	4.0	6.0	1.75	2.25
C	TMWW-t	MT20	4.0	6.0	2.00	2.75
D	TMWW-t	MT20	4.0	6.0	1.50	2.50
E	TS-t	MT20	4.0	6.0	Edge	3.00
F	TMWW+t	MT20	5.0	6.0	2.00	1.25
G	TTW-h	MT20	4.0	6.0		
H	TTW-h	MT20	4.0	6.0		
I	TMWW-t	MT20	5.0	6.0	2.25	2.25
J	TS-t	MT20	4.0	6.0	Edge	3.00
K	TMWW-t	MT20	4.0	6.0	1.75	2.25
L	TMWW-t	MT20	4.0	6.0		
M	TMVW-t	MT20	4.0	10.0	1.75	4.75
O	BMV1+p	MT20	3.0	4.0		
P	BMWW-t	MT20	5.0	6.0	2.50	2.25
Q	BMWW+t	MT20	4.0	6.0		

LATERAL BRACE(S) SHOWN SHALL BE 2X4 SPF#2

DIMENSIONS, SUPPORTS AND LOADINGS SPECIFIED BY FABRICATOR TO BE VERIFIED BY BUILDING DESIGNER

BEARINGS

JT	FACTORED GROSS REACTION VERT	HORZ	MAXIMUM FACTORED GROSS REACTION DOWN	HORZ	UPLIFT	INPUT BRG	REQRD BRG
Y	3018	0	3072	0	0	IN-SX	IN-SX
U	11892	0	11892	0	0	5-8	5-8 + 2-TBE6
O	4787	0	4836	0	0	5-8	2-10

UNFACTORED REACTIONS

JT	1ST LCASE COMBINED	MAX./MIN. COMPONENT REACTIONS SNOW	LIVE	PERM.LIVE	WIND	DEAD	SOIL
Y	2149	1364 / 0	0 / 0	0 / 0	0 / 0	821 / 0	0 / 0
U	8479	5173 / 0	0 / 0	0 / 0	0 / 0	3306 / 0	0 / 0
O	3410	2130 / 0	0 / 0	0 / 0	0 / 0	1313 / 0	0 / 0

BEARING MATERIAL TO BE SPF NO.2 OR BETTER AT JOINT(S) Y, U, O

BRACING

TOP CHORD TO BE SHEATHED OR MAX. PURLIN SPACING = 3.87 FT.
MAX. UNBRACED BOTTOM CHORD LENGTH = 6.25 FT OR RIGID CEILING DIRECTLY APPLIED.

ALL PITCH BREAKS AND PERIMETER CORNER JOINTS MUST BE LATERALLY RESTRAINED.

2x4 DRY SPF No.2 T-BRACE AT D-U, K-S, G-T, H-T
2x6 DRY SPF No.2 T-BRACE AT F-U, I-T

FASTEN T AND I-BRACES TO NARROW EDGE OF WEB WITH ONE ROW PER PLY OF 3" COMMON WIRE NAILS @ 6" O.C. WITH 3" MINIMUM END DISTANCE. BRACE MUST COVER 90% OF WEB LENGTH.

END VERTICAL(S) MUST BE SHEATHED OR HAVE BRACES AS INDICATED IN THE MAX. UNBRACED LENGTH COLUMN OF THE TABLE BELOW

LOADING

TOTAL LOAD CASES: (6)

CHORDS

MEMB. FR-TO	MAX. FACTORED FORCE (LBS)	FACTORED VERT. LOAD (PLF) FROM	TO	LC1 MAX CSI (LC)	MAX. UNBRAC LENGTH
A- B	0 / 28	-78.0	-78.0	0.08 (1)	10.00
B- C	-2779 / 0	-78.0	-78.0	0.15 (5)	5.35
C- D	-351 / 0	-78.0	-78.0	0.10 (5)	6.25
D- E	0 / 2237	-78.0	-78.0	0.33 (1)	10.00
E- F	0 / 2237	-78.0	-78.0	0.33 (1)	10.00
F- G	-169 / 62	-78.0	-78.0	0.13 (1)	6.25
G- H	-128 / 81	-78.0	-78.0	0.02 (6)	6.25
H- I	-162 / 86	-78.0	-78.0	0.05 (1)	6.25
I- J	-2015 / 0	-78.0	-78.0	0.11 (6)	6.10
J- K	-2015 / 0	-78.0	-78.0	0.11 (6)	6.10
K- L	-4278 / 0	-78.0	-78.0	0.17 (6)	4.49
L- M	-5761 / 0	-78.0	-78.0	0.28 (6)	3.87
M- N	0 / 28	-78.0	-78.0	0.08 (1)	10.00
Y- B	-1980 / 0	0.0	0.0	0.07 (5)	7.81
O- M	-3812 / 0	0.0	0.0	0.13 (6)	7.23
Y- X	0 / 0	-555.1	-555.1	0.27 (5)	10.00
X- W	0 / 2495	-555.1	-555.1	0.32 (5)	10.00
W- V	0 / 316	-555.1	-555.1	0.53 (1)	10.00
V- U	0 / 316	-555.1	-555.1	0.53 (1)	10.00
U- T	-1996 / 0	-486.8	-486.8	0.53 (1)	6.25
T- S	0 / 1798	-486.8	-486.8	0.22 (6)	10.00
S- R	0 / 3829	-486.8	-486.8	0.37 (6)	10.00
R- Q	0 / 3829	-486.8	-486.8	0.37 (6)	10.00
Q- P	0 / 5161	-486.8	-486.8	0.45 (6)	10.00
P- O	0 / 0	-486.8	-486.8	0.27 (6)	10.00

WEBS

MEMB. FR-TO	MAX. FACTORED FORCE (LBS)	MAX CSI (LC)
C- X	0 / 2373	0.29 (6)
W- C	-2704 / 0	0.64 (1)
D- W	0 / 3487	0.43 (5)
U- D	-3508 / 0	0.75 (5)
F- U	-6100 / 0	0.43 (1)
T- F	0 / 5151	0.64 (1)
I- T	-4257 / 0	0.87 (1)
S- I	0 / 4470	0.29 (1)
K- S	-3204 / 0	0.68 (1)
Q- K	0 / 3138	0.39 (1)
L- Q	-1655 / 0	0.39 (1)
P- L	0 / 1423	0.18 (5)
X- B	0 / 2536	0.31 (5)
M- P	0 / 5247	0.65 (6)
T- G	-62 / 0	0.02 (1)
H- T	-105 / 0	0.04 (1)

PATTERN-LOADING CHECK APPLIED TO THIS TRUSS.

[M]

DESIGN CRITERIA

SPECIFIED LOADS:

TOP CH.	LL	=	21.0	PSF
	DL	=	6.0	PSF
BOT CH.	LL	=	0.0	PSF
	DL	=	7.4	PSF
TOTAL LOAD		=	34.4	PSF

SPACING = 24.0 IN. C/C

LOADING IN FLAT SECTION BASED ON A SLOPE OF 2.00/12 MINIMUM

GIRDER TYPE: CStdGirder
START DISTANCE = 0-0
START SPAN CARRIED = 24-3-0
END DISTANCE = 13-3-0
END SPAN CARRIED = 24-3-0
END WALL WIDTH = 0-0
APPLIED TO FRONT SIDE OF BOTTOM CHORD.
- ADDT'L LOADS BASED ON 55 % OF GSL.

GIRDER TYPE: CStdGirder
START DISTANCE = 13-3-0
START SPAN CARRIED = 21-5-0
END DISTANCE = 32-10-0
END SPAN CARRIED = 21-5-0
END WALL WIDTH = 0-0
APPLIED TO FRONT SIDE OF BOTTOM CHORD.
- ADDT'L LOADS BASED ON 55 % OF GSL.

THIS TRUSS IS DESIGNED FOR RESIDENTIAL OR SMALL BUILDING REQUIREMENTS OF PART 9, NBCC 2015

THIS DESIGN COMPLIES WITH:
- PART 9 OF BCBC 2018 , ABC 2019
- PART 9 OF OBC 2012 (2019 AMENDMENT)
- CSA 086-14
- TPIC 2014

(55 % OF 23.0 P.S.F. G.S.L. PLUS 8.4 P.S.F. RAIN LOAD) EQUALS 21.0 P.S.F. SPECIFIED ROOF LIVE LOAD

ALLOWABLE DEFL.(LL)= L/360 (0.65")
CALCULATED VERT. DEFL.(LL) = L/ 999 (0.08")
ALLOWABLE DEFL.(TL)= L/360 (0.65")
CALCULATED VERT. DEFL.(TL) = L/ 999 (0.16")

CSI: TC=0.33/1.00 (D-F:1) , BC=0.53/1.00 (U-W:1) , WB=0.87/1.00 (I-T:1) , SSI=0.47/1.00 (U-W:1)

DOL LUMBER=1.00 NAIL=1.00 LS BEND=1.00 COMP=1.00 SHEAR=1.00 TENS= 1.00

COMPANION LIVE LOAD FACTOR = 1.00

AUTOSOLVE HEELS OFF

TRUSS PLATE MANUFACTURER IS NOT RESPONSIBLE FOR QUALITY CONTROL IN THE TRUSS MANUFACTURING PLANT .

NAIL VALUES

PLATE	GRIP(DRY) (PSI) MAX	MIN	SHEAR (PLI) MAX	MIN	SECTION (PLI) MAX	MIN
MT20	650	371	1747	788	1987	1873

PLATE PLACEMENT TOL. = 0.250 inches

PLATE ROTATION TOL. = 5.0 Deg.

JSI GRIP= 0.90 (M) (INPUT = 0.90)
JSI METAL= 0.59 (P) (INPUT = 1.00)

CONTINUED ON PAGE 2

JOB NAME	TRUSS NAME	QUANTITY	PLY	JOB DESC.	DRWG NO.
343192	H34		2	TRUSS DESC.	

PLATES (table is in inches)

JT	TYPE	PLATES	W	LEN	Y	X
R	BS-t	MT20	6.0	7.0		
S	BMWW+t	MT20	8.0	12.0	Edge	2.50
T	BMWWWW*+p	MT20	10.0	12.0		
U	BMWW1+t	MT20	8.0	12.0	Edge	2.50
V	BS-t	MT20	6.0	7.0		
W	BMWW+t	MT20	5.0	6.0		
X	BMWW+t	MT20	4.0	6.0	3.25	1.75
Y	BMV1+p	MT20	2.0	4.0		

Edge - INDICATES REFERENCE CORNER OF PLATE TOUCHES EDGE OF CHORD.

LATERAL BRACE(S) SHOWN SHALL BE 2X4 SPF#2

JOB NAME	TRUSS NAME	QUANTITY	PLY	JOB DESC.	DRWG NO.
343192	H35		1	TRUSS DESC. JT 45147	E22052689

Alpa Roof Truss, Maple

Version 8.530 S Feb 23 2022 MiTek Industries, Inc. Tue Jun 7 14:08:04 2022 Page 1
ID:MF8iiriaTok7DlbpT4B71Xys4PG-74Km42LzLNHz6 IQaQC?84r4qqW6BIA0Im3kHbz8fxv

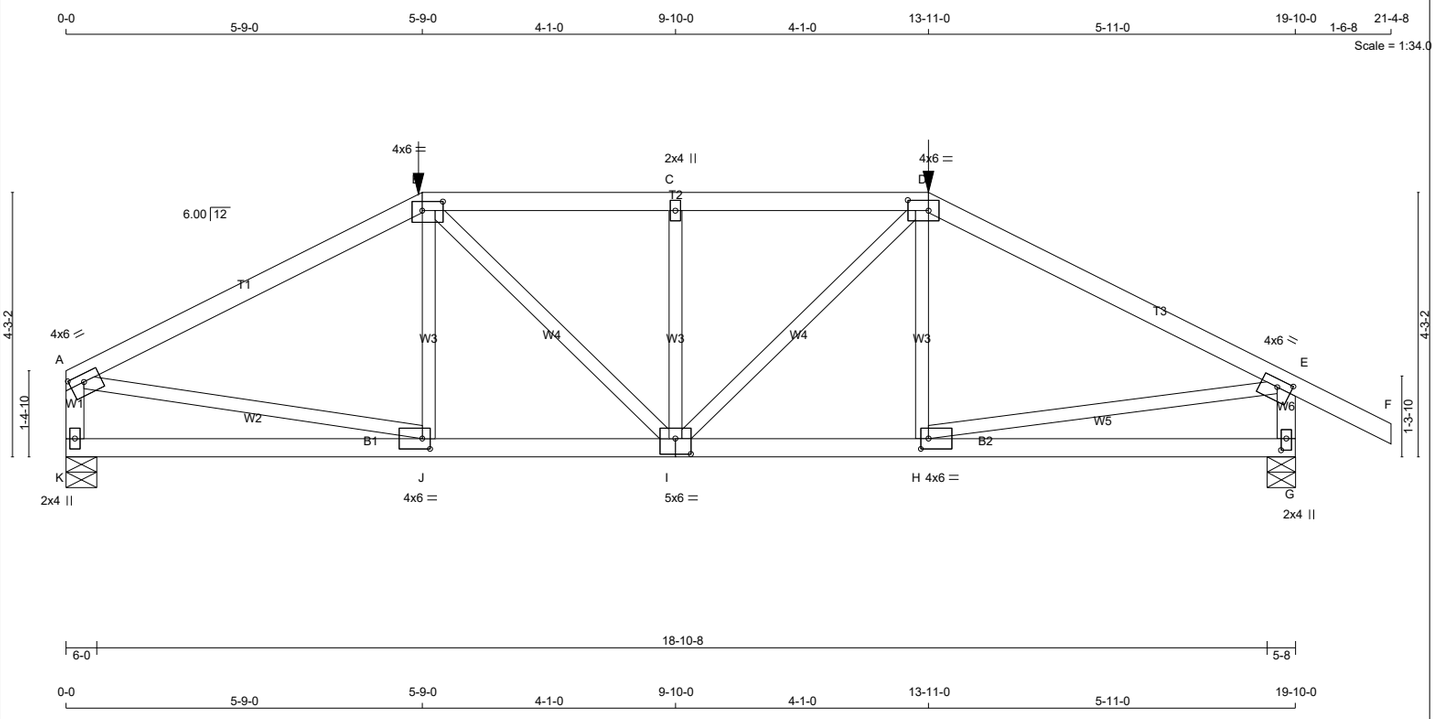

TOTAL WEIGHT = 78 lb

[M]

LUMBER

N. L. G. A. RULES

CHORDS	SIZE		LUMBER	DESCR.
A - B	2x4	DRY	No.2	SPF
B - D	2x4	DRY	No.2	SPF
D - F	2x4	DRY	No.2	SPF
K - A	2x4	DRY	No.2	SPF
G - E	2x4	DRY	No.2	SPF
K - I	2x4	DRY	No.2	SPF
I - G	2x4	DRY	No.2	SPF
ALL WEBS EXCEPT	2x3	DRY	No.2	SPF

DRY: SEASONED LUMBER.

PLATES (table is in inches)

JT	TYPE	PLATES	W	LEN	Y	X
A	TMVW-t	MT20	4.0	6.0	1.50	2.75
B	TTWW-l	MT20	4.0	6.0	1.75	4.00
C	TMW+w	MT20	2.0	4.0		
D	TTWW-l	MT20	4.0	6.0	2.00	4.00
E	TMVW-t	MT20	4.0	6.0	1.50	2.75
G	BMV1+p	MT20	2.0	4.0	2.25	1.00
H	BMWW-t	MT20	4.0	6.0	2.00	1.50
I	BSWWW-l	MT20	5.0	6.0	3.00	3.00
J	BMWW-t	MT20	4.0	6.0	2.00	1.50
K	BMV1+p	MT20	2.0	4.0		

LATERAL BRACE(S) SHOWN SHALL BE 2X4 SPF#2

LICENSED PROFESSIONAL ENGINEER
V. WIDYA
100225448
06/07/2022
PROVINCE OF ONTARIO

DIMENSIONS, SUPPORTS AND LOADINGS SPECIFIED BY FABRICATOR TO BE VERIFIED BY BUILDING DESIGNER

BEARINGS

JT	FACTORED GROSS REACTION VERT	HORZ	MAXIMUM FACTORED GROSS REACTION DOWN	HORZ	UPLIFT	INPUT BRG IN-SX	REQRD BRG IN-SX
K	1786	0	1786	0	0	6-0	2-5
G	1905	0	1905	0	0	5-8	2-11

UNFACTORED REACTIONS

JT	1ST LCASE COMBINED	MAX./MIN. COMPONENT REACTIONS SNOW	LIVE	PERM.LIVE	WIND	DEAD	SOIL
K	1276	766 / 0	0 / 0	0 / 0	0 / 0	510 / 0	0 / 0
G	1358	830 / 0	0 / 0	0 / 0	0 / 0	528 / 0	0 / 0

BEARING MATERIAL TO BE SPF NO.2 OR BETTER AT JOINT(S) K, G

BRACING

TOP CHORD TO BE SHEATHED OR MAX. PURLIN SPACING = 3.54 FT.
MAX. UNBRACED BOTTOM CHORD LENGTH = 10.00 FT OR RIGID CEILING DIRECTLY APPLIED.

ALL PITCH BREAKS AND PERIMETER CORNER JOINTS MUST BE LATERALLY RESTRAINED.

LOADING

TOTAL LOAD CASES: (4)

CHORDS MEMB. FR-TO	MAX. FACTORED FORCE (LBS)	FACTORED VERT. LOAD (PLF) FROM	TO	LC1 CSI (LC)	MAX UNBRAC LENGTH	WEBS MEMB. FR-TO	MAX. FACTORED FORCE (LBS)	MAX CSI (LC)
A- B	-2403 / 0	-78.0	-78.0	0.72 (1)	3.63	J- B	-172 / 104	0.05 (1)
B- C	-2604 / 0	-154.3	-154.3	0.57 (1)	3.56	B- I	0 / 641	0.16 (1)
C- D	-2604 / 0	-154.3	-154.3	0.57 (1)	3.56	I- C	-763 / 0	0.22 (1)
D- E	-2445 / 0	-78.0	-78.0	0.78 (1)	3.54	I- D	0 / 588	0.15 (1)
E- F	0 / 28	-78.0	-78.0	0.16 (1)	10.00	H- D	-133 / 123	0.05 (4)
K- A	-1697 / 0	0.0	0.0	0.19 (1)	6.33	A- J	0 / 2184	0.54 (1)
G- E	-1812 / 0	0.0	0.0	0.20 (1)	6.16	H- E	0 / 2215	0.55 (1)
K- J	0 / 0	-36.6	-36.6	0.30 (4)	10.00			
J- I	0 / 2144	-36.6	-36.6	0.53 (1)	10.00			
I- H	0 / 2182	-36.6	-36.6	0.55 (1)	10.00			
H- G	0 / 0	-36.6	-36.6	0.31 (4)	10.00			

FACTORED CONCENTRATED LOADS (LBS)

JT	LOC.	LC1	MAX-	MAX+	FACE	DIR.	TYPE	HEEL	CONN.
B	5-9-0	-330	-330	---	FRONT	VERT	TOTAL	---	C1
D	13-11-0	-340	-340	---	FRONT	VERT	TOTAL	---	C1

CONNECTION REQUIREMENTS

1) **C1:** A SUITABLE HANGER/MECHANICAL CONNECTION IS REQUIRED.

DESIGN CRITERIA

SPECIFIED LOADS:

TOP CH.	LL	=	21.0	PSF
	DL	=	6.0	PSF
BOT CH.	LL	=	0.0	PSF
	DL	=	7.4	PSF
TOTAL LOAD		=	34.4	PSF

SPACING = 24.0 IN. C/C

LOADING IN FLAT SECTION BASED ON A SLOPE OF 2.00/12 MINIMUM

GIRDER TYPE: CPrimeHip
LEFT SETBACK = 5-9-0
RIGHT SETBACK = 5-11-0
END SETBACK = 5-11-0
END WALL WIDTH = 0-0
CORNER FRAMING TYPE: CONVENTIONAL
END JACK TYPE: CONVENTIONAL
APPLIED TO FRONT SIDE
- ADDT'L LOADS BASED ON 55 % OF GSL.

THIS TRUSS IS DESIGNED FOR RESIDENTIAL OR SMALL BUILDING REQUIREMENTS OF PART 9, NBCC 2015

THIS DESIGN COMPLIES WITH:
- PART 9 OF BCBC 2018 , ABC 2019
- PART 9 OF OBC 2012 (2019 AMENDMENT)
- CSA 086-14
- TPIC 2014

(55 % OF 23.0 P.S.F. G.S.L. PLUS 8.4 P.S.F. RAIN LOAD) EQUALS 21.0 P.S.F. SPECIFIED ROOF LIVE LOAD

ALLOWABLE DEFL.(LL)= L/360 (0.66")
CALCULATED VERT. DEFL.(LL) = L/ 999 (0.08")
ALLOWABLE DEFL.(TL)= L/360 (0.66")
CALCULATED VERT. DEFL.(TL) = L/ 999 (0.15")

CSI: TC=0.78/1.00 (D-E:1) , BC=0.55/1.00 (H-I:1) , WB=0.55/1.00 (E-H:1) , SSI=0.33/1.00 (B-C:1)

DOL LUMBER=1.00 NAIL=1.00 LS BEND=1.00 COMP=1.00 SHEAR=1.00 TENS= 1.00

COMPANION LIVE LOAD FACTOR = 1.00

TRUSS PLATE MANUFACTURER IS NOT RESPONSIBLE FOR QUALITY CONTROL IN THE TRUSS MANUFACTURING PLANT .

NAIL VALUES

PLATE	GRIP(DRY) (PSI) MAX	MIN	SHEAR (PLI) MAX	MIN	SECTION (PLI) MAX	MIN
MT20	650	371	1747	788	1987	1873

PLATE PLACEMENT TOL. = 0.250 inches

PLATE ROTATION TOL. = 5.0 Deg.

JSI GRIP= 0.89 (D) (INPUT = 0.90)
JSI METAL= 0.62 (E) (INPUT = 1.00)

JOB NAME	TRUSS NAME	QUANTITY	PLY	JOB DESC.	DRWG NO.
343192	H36		1	TRUSS DESC. JT 45147	E22052690

Alpa Roof Truss, Maple

Version 8.530 S Feb 23 2022 MiTek Industries, Inc. Tue Jun 7 14:08:05 2022 Page 1
ID:MF8iiriaTok7DlbpT4B71Xys4PG-bGu8IOMb6hPqk7td78jEqIOPpEvcwl 9XQpHp1z8fxu

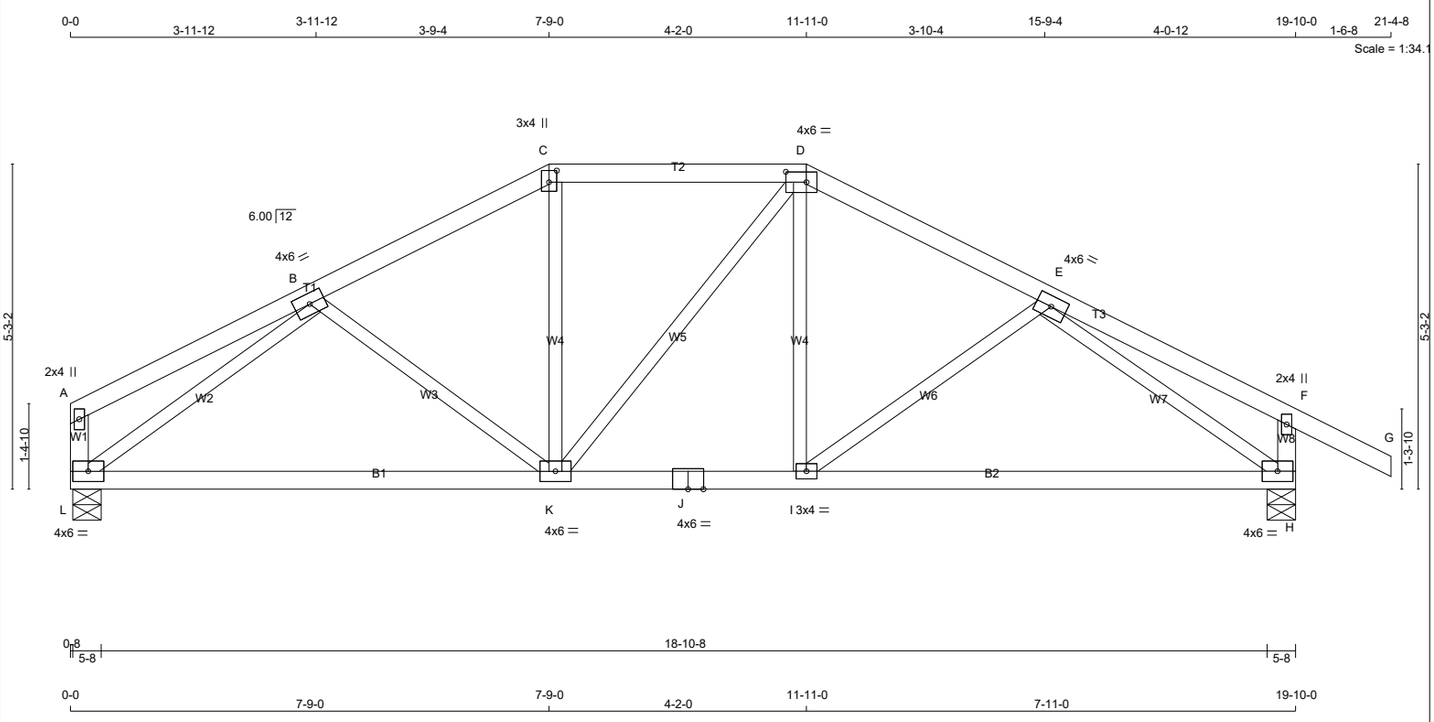

TOTAL WEIGHT = 79 lb

[M][F]

LUMBER

N. L. G. A. RULES

CHORDS	SIZE		LUMBER	DESCR.
A - C	2x4	DRY	No.2	SPF
C - D	2x4	DRY	No.2	SPF
D - G	2x4	DRY	No.2	SPF
L - A	2x4	DRY	No.2	SPF
H - F	2x4	DRY	No.2	SPF
L - J	2x4	DRY	No.2	SPF
J - H	2x4	DRY	No.2	SPF
ALL WEBS EXCEPT	2x3	DRY	No.2	SPF

DRY: SEASONED LUMBER.

PLATES (table is in inches)

JT	TYPE	PLATES	W	LEN	Y	X
A	TMV+p	MT20	2.0	4.0		
B	TMWW-t	MT20	4.0	6.0		
C	TTW+p	MT20	3.0	4.0	2.25	1.50
D	TTWW-l	MT20	4.0	6.0	2.00	4.00
E	TMWW-t	MT20	4.0	6.0		
F	TMV+p	MT20	2.0	4.0		
H	BMVW1-t	MT20	4.0	6.0		
I	BMWW-t	MT20	3.0	4.0		
J	BS-t	MT20	4.0	6.0		
K	BMWWW-t	MT20	4.0	6.0		
L	BMVW1-t	MT20	4.0	6.0		

LATERAL BRACE(S) SHOWN SHALL BE 2X4 SPF#2

DIMENSIONS, SUPPORTS AND LOADINGS SPECIFIED BY FABRICATOR TO BE VERIFIED BY BUILDING DESIGNER

BEARINGS

JT	FACTORED GROSS REACTION VERT	HORZ	MAXIMUM FACTORED GROSS REACTION DOWN	HORZ	UPLIFT	INPUT BRG IN-SX	REQRD BRG IN-SX
L	957	0	957	0	0	5-8	1-8
H	1082	0	1082	0	0	5-8	1-8

UNFACTORED REACTIONS

JT	1ST LCASE COMBINED	MAX./MIN. COMPONENT REACTIONS SNOW	LIVE	PERM.LIVE	WIND	DEAD	SOIL
L	682	416 / 0	0 / 0	0 / 0	0 / 0	266 / 0	0 / 0
H	769	484 / 0	0 / 0	0 / 0	0 / 0	285 / 0	0 / 0

BEARING MATERIAL TO BE SPF NO.2 OR BETTER AT JOINT(S) L, H

BRACING

TOP CHORD TO BE SHEATHED OR MAX. PURLIN SPACING = 5.95 FT.
MAX. UNBRACED BOTTOM CHORD LENGTH = 10.00 FT OR RIGID CEILING DIRECTLY APPLIED.

ALL PITCH BREAKS AND PERIMETER CORNER JOINTS MUST BE LATERALLY RESTRAINED.

LOADING

TOTAL LOAD CASES: (4)

CHORDS

MEMB. FR-TO	MAX. FACTORED FORCE (LBS)	FACTORED VERT. LOAD LC1 (PLF) FROM	TO	MAX CSI (LC)	MAX. UNBRAC LENGTH
A- B	0 / 15	-78.0	-78.0	0.18 (1)	10.00
B- C	-1050 / 0	-78.0	-78.0	0.15 (1)	5.98
C- D	-929 / 0	-78.0	-78.0	0.18 (1)	6.21
D- E	-1058 / 0	-78.0	-78.0	0.15 (1)	5.95
E- F	0 / 15	-78.0	-78.0	0.19 (1)	10.00
F- G	0 / 28	-78.0	-78.0	0.14 (1)	10.00
L- A	-119 / 0	0.0	0.0	0.01 (1)	7.81
H- F	-246 / 0	0.0	0.0	0.03 (1)	7.81
L- K	0 / 999	-18.5	-18.5	0.33 (4)	10.00
K- J	0 / 936	-18.5	-18.5	0.31 (4)	10.00
J- I	0 / 936	-18.5	-18.5	0.31 (4)	10.00
I- H	0 / 1030	-18.5	-18.5	0.34 (4)	10.00

WEBS

MEMB. FR-TO	MAX. FACTORED FORCE (LBS)	MAX CSI (LC)
B- K	-93 / 20	0.04 (1)
K- C	0 / 185	0.04 (4)
K- D	-12 / 0	0.01 (1)
I- D	0 / 195	0.05 (4)
I- E	-122 / 11	0.05 (1)
L- B	-1265 / 0	0.49 (1)
E- H	-1287 / 0	0.51 (1)

DESIGN CRITERIA

SPECIFIED LOADS:

TOP CH.	LL	=	21.0	PSF
	DL	=	6.0	PSF
BOT CH.	LL	=	0.0	PSF
	DL	=	7.4	PSF
TOTAL LOAD		=	34.4	PSF

SPACING = 24.0 IN. C/C

LOADING IN FLAT SECTION BASED ON A SLOPE OF 2.00/12 MINIMUM

THIS TRUSS IS DESIGNED FOR RESIDENTIAL OR SMALL BUILDING REQUIREMENTS OF PART 9, NBCC 2015

THIS DESIGN COMPLIES WITH:
- PART 9 OF BCBC 2018 , ABC 2019
- PART 9 OF OBC 2012 (2019 AMENDMENT)
- CSA 086-14
- TPIC 2014

(55 % OF 23.0 P.S.F. G.S.L. PLUS 8.4 P.S.F. RAIN LOAD) EQUALS 21.0 P.S.F. SPECIFIED ROOF LIVE LOAD

ALLOWABLE DEFL.(LL)= L/360 (0.66")
CALCULATED VERT. DEFL.(LL) = L/ 999 (0.03")
ALLOWABLE DEFL.(TL)= L/360 (0.66")
CALCULATED VERT. DEFL.(TL) = L/ 999 (0.15")

CSI: TC=0.19/1.00 (E-F:1) , BC=0.34/1.00 (H-I:4) , WB=0.51/1.00 (E-H:1) , SSI=0.13/1.00 (E-F:1)

DOL LUMBER=1.00 NAIL=1.00 LS BEND=1.10 COMP=1.10 SHEAR=1.10 TENS= 1.10

COMPANION LIVE LOAD FACTOR = 1.00

TRUSS PLATE MANUFACTURER IS NOT RESPONSIBLE FOR QUALITY CONTROL IN THE TRUSS MANUFACTURING PLANT .

NAIL VALUES

PLATE	GRIP(DRY) (PSI) MAX	MIN	SHEAR (PLI) MAX	MIN	SECTION (PLI) MAX	MIN
MT20	650	371	1747	788	1987	1873

PLATE PLACEMENT TOL. = 0.250 inches

PLATE ROTATION TOL. = 5.0 Deg.

JSI GRIP= 0.85 (C) (INPUT = 0.90)
JSI METAL= 0.29 (J) (INPUT = 1.00)

JOB NAME	TRUSS NAME	QUANTITY	PLY	JOB DESC.		DRWG NO.
343192	H37		1	TRUSS DESC.	JT 45147	E22052691

Alpa Roof Truss, Maple

Version 8.530 S Feb 23 2022 MiTek Industries, Inc. Tue Jun 7 14:08:07 2022 Page 1

ID:MF8iiriaTok7DlbpT4B71Xys4PG-Yf0vi4OrdIfYzR0?FZIilj Tj51diOkYS kIOuwz8fxs

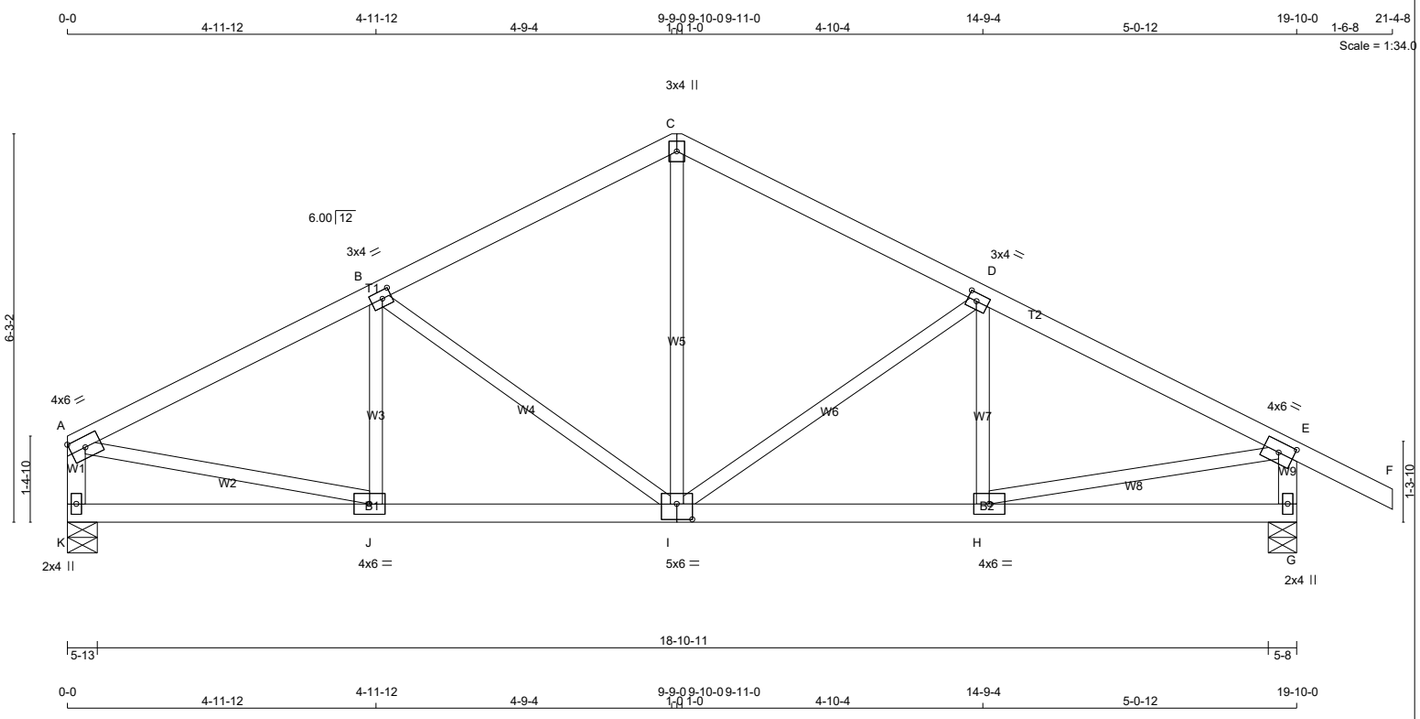

TOTAL WEIGHT = 79 lb

[M][F]

LUMBER

N. L. G. A. RULES

CHORDS	SIZE		LUMBER	DESCR.
A - C	2x4	DRY	No.2	SPF
C - F	2x4	DRY	No.2	SPF
K - A	2x4	DRY	No.2	SPF
G - E	2x4	DRY	No.2	SPF
K - I	2x4	DRY	No.2	SPF
I - G	2x4	DRY	No.2	SPF
ALL WEBS EXCEPT	2x3	DRY	No.2	SPF

DRY: SEASONED LUMBER.

PLATES (table is in inches)

JT	TYPE	PLATES	W	LEN	Y	X
A	TMVW-t	MT20	4.0	6.0		Edge
B	TMWW-t	MT20	3.0	4.0	1.50	1.75
C	TTW+p	MT20	3.0	4.0		
D	TMWW-t	MT20	3.0	4.0	1.50	1.75
E	TMVW-t	MT20	4.0	6.0	2.00	3.00
G	BMV1+p	MT20	2.0	4.0		
H	BMWW-t	MT20	4.0	6.0		
I	BSWWW-l	MT20	5.0	6.0	3.00	3.00
J	BMWW-t	MT20	4.0	6.0		
K	BMV1+p	MT20	2.0	4.0		

Edge - INDICATES REFERENCE CORNER OF PLATE TOUCHES EDGE OF CHORD.

LATERAL BRACE(S) SHOWN SHALL BE 2X4 SPF#2

DIMENSIONS, SUPPORTS AND LOADINGS SPECIFIED BY FABRICATOR TO BE VERIFIED BY BUILDING DESIGNER

BEARINGS

JT	FACTORED GROSS REACTION VERT	HORZ	MAXIMUM FACTORED GROSS REACTION DOWN	HORZ	UPLIFT	INPUT BRG	REQRD BRG
K	957	0	957	0	0	5-13	1-8
G	1082	0	1082	0	0	5-8	1-8

UNFACTORED REACTIONS

JT	1ST LCASE COMBINED	MAX./MIN. COMPONENT REACTIONS SNOW	LIVE	PERM.LIVE	WIND	DEAD	SOIL
K	682	416 / 0	0 / 0	0 / 0	0 / 0	266 / 0	0 / 0
G	769	484 / 0	0 / 0	0 / 0	0 / 0	285 / 0	0 / 0

BEARING MATERIAL TO BE SPF NO.2 OR BETTER AT JOINT(S) K, G

BRACING

TOP CHORD TO BE SHEATHED OR MAX. PURLIN SPACING = 5.53 FT.
MAX. UNBRACED BOTTOM CHORD LENGTH = 10.00 FT OR RIGID CEILING DIRECTLY APPLIED.

ALL PITCH BREAKS AND PERIMETER CORNER JOINTS MUST BE LATERALLY RESTRAINED.

LOADING

TOTAL LOAD CASES: (4)

CHORDS

MEMB. FR-TO	MAX. FACTORED FORCE (LBS)	FACTORED VERT. LOAD (PLF) FROM	TO	LC1 CSI (LC)	MAX UNBRAC LENGTH
A- B	-1181 / 0	-78.0	-78.0	0.25 (1)	5.59
B- C	-905 / 0	-78.0	-78.0	0.24 (1)	6.18
C- D	-906 / 0	-78.0	-78.0	0.25 (1)	6.17
D- E	-1210 / 0	-78.0	-78.0	0.26 (1)	5.53
E- F	0 / 28	-78.0	-78.0	0.14 (1)	10.00
K- A	-919 / 0	0.0	0.0	0.09 (1)	7.81
G- E	-1044 / 0	0.0	0.0	0.11 (1)	7.69
K- J	0 / 0	-18.5	-18.5	0.12 (4)	10.00
J- I	0 / 1074	-18.5	-18.5	0.23 (1)	10.00
I- H	0 / 1100	-18.5	-18.5	0.23 (1)	10.00
H- G	0 / 0	-18.5	-18.5	0.12 (4)	10.00

WEBS

MEMB. FR-TO	MAX. FACTORED FORCE (LBS)	MAX CSI (LC)
J- B	-124 / 35	0.03 (1)
I- D	-351 / 0	0.22 (1)
H- D	-380 / 0	0.24 (1)
A- J	-106 / 43	0.02 (1)
H- E	0 / 1099	0.25 (1)
I- C	0 / 1121	0.25 (1)
	0 / 502	0.11 (1)

DESIGN CRITERIA

SPECIFIED LOADS:

TOP CH.	LL	=	21.0	PSF
	DL	=	6.0	PSF
BOT CH.	LL	=	0.0	PSF
	DL	=	7.4	PSF
TOTAL LOAD		=	34.4	PSF

SPACING = 24.0 IN. C/C

THIS TRUSS IS DESIGNED FOR RESIDENTIAL OR SMALL BUILDING REQUIREMENTS OF PART 9, NBCC 2015

THIS DESIGN COMPLIES WITH:
- PART 9 OF BCBC 2018 , ABC 2019
- PART 9 OF OBC 2012 (2019 AMENDMENT)
- CSA 086-14
- TPIC 2014

(55 % OF 23.0 P.S.F. G.S.L. PLUS 8.4 P.S.F. RAIN LOAD) EQUALS 21.0 P.S.F. SPECIFIED ROOF LIVE LOAD

ALLOWABLE DEFL.(LL)= L/360 (0.66")
CALCULATED VERT. DEFL.(LL) = L/ 999 (0.03")
ALLOWABLE DEFL.(TL)= L/360 (0.66")
CALCULATED VERT. DEFL.(TL) = L/ 999 (0.07")

CSI: TC=0.26/1.00 (D-E:1) , BC=0.23/1.00 (H-I:1) , WB=0.25/1.00 (E-H:1) , SSI=0.17/1.00 (D-E:1)

DOL LUMBER=1.00 NAIL=1.00 LS BEND=1.10 COMP=1.10 SHEAR=1.10 TENS= 1.10

COMPANION LIVE LOAD FACTOR = 1.00

TRUSS PLATE MANUFACTURER IS NOT RESPONSIBLE FOR QUALITY CONTROL IN THE TRUSS MANUFACTURING PLANT .

NAIL VALUES

PLATE	GRIP(DRY) (PSI) MAX	MIN	SHEAR (PLI) MAX	MIN	SECTION (PLI) MAX	MIN
MT20	650	371	1747	788	1987	1873

PLATE PLACEMENT TOL. = 0.250 inches

PLATE ROTATION TOL. = 5.0 Deg.

JSI GRIP= 0.70 (J) (INPUT = 0.90)
JSI METAL= 0.31 (E) (INPUT = 1.00)

JOB NAME	TRUSS NAME	QUANTITY	PLY	JOB DESC.	DRWG NO.
343192	H38		1	TRUSS DESC. JT 45147	E22052692

Alpha Roof Truss, Maple

Version 8.530 S Feb 23 2022 MiTek Industries, Inc. Tue Jun 7 14:08:08 2022 Page 1

ID:MF8iiriaTok7DlbpT4B71Xys4PG-0rZHwQPTOcnPbbbCpGGxIw?uqRyx7BobDO1yQMz8fxr

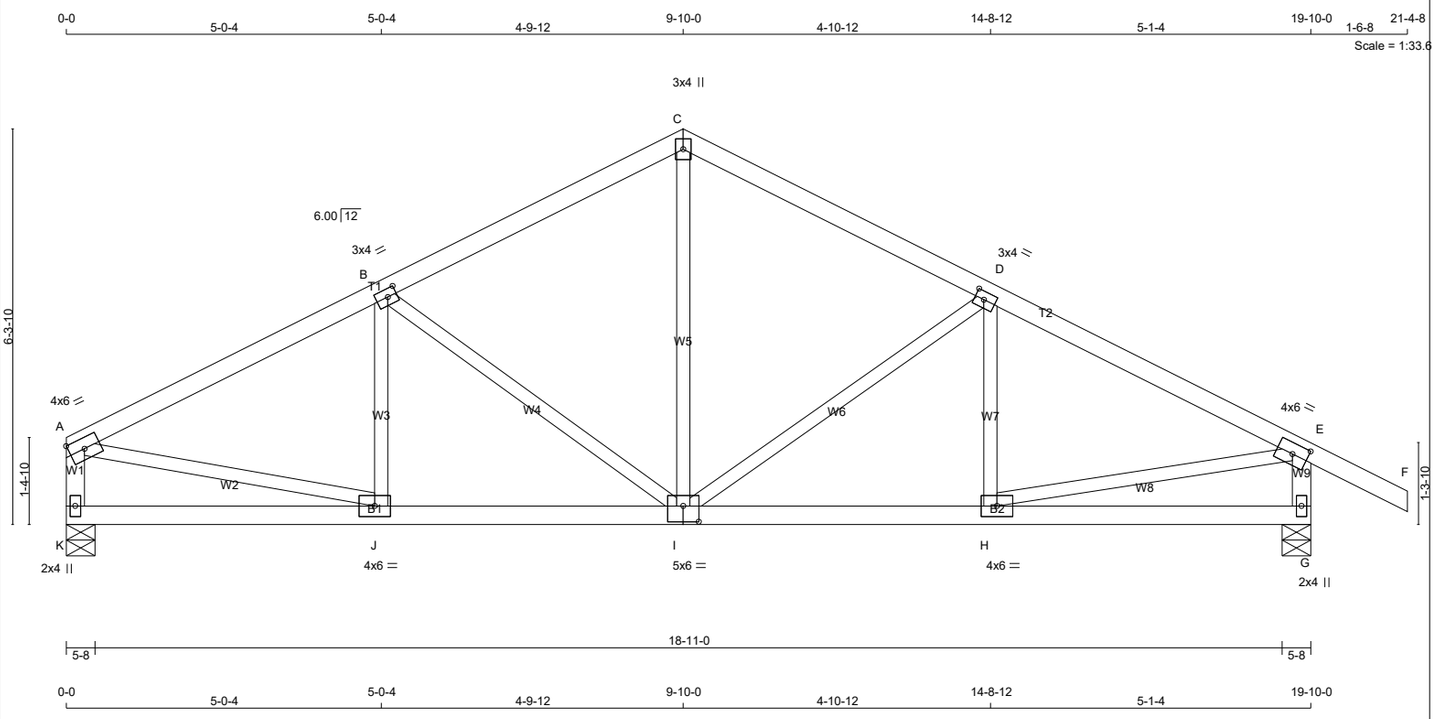

TOTAL WEIGHT = 79 lb

[M][F]

LUMBER

N. L. G. A. RULES

CHORDS	SIZE		LUMBER	DESCR.
A - C	2x4	DRY	No.2	SPF
C - F	2x4	DRY	No.2	SPF
K - A	2x4	DRY	No.2	SPF
G - E	2x4	DRY	No.2	SPF
K - I	2x4	DRY	No.2	SPF
I - G	2x4	DRY	No.2	SPF
ALL WEBS EXCEPT	2x3	DRY	No.2	SPF

DRY: SEASONED LUMBER.

PLATES (table is in inches)

JT	TYPE	PLATES	W	LEN	Y	X
A	TMVW-t	MT20	4.0	6.0		Edge
B	TMWW-t	MT20	3.0	4.0	1.50	1.75
C	TTW+p	MT20	3.0	4.0		
D	TMWW-t	MT20	3.0	4.0	1.50	1.75
E	TMVW-t	MT20	4.0	6.0	2.00	3.00
G	BMV1+p	MT20	2.0	4.0		
H	BMWW-t	MT20	4.0	6.0		
I	BSWWW-l	MT20	5.0	6.0	3.00	3.00
J	BMWW-t	MT20	4.0	6.0		
K	BMV1+p	MT20	2.0	4.0		

Edge - INDICATES REFERENCE CORNER OF PLATE TOUCHES EDGE OF CHORD.

LATERAL BRACE(S) SHOWN SHALL BE 2X4 SPF#2

DIMENSIONS, SUPPORTS AND LOADINGS SPECIFIED BY FABRICATOR TO BE VERIFIED BY BUILDING DESIGNER

BEARINGS

JT	FACTORED GROSS REACTION VERT	HORZ	MAXIMUM FACTORED GROSS REACTION DOWN	HORZ	UPLIFT	INPUT BRG	REQRD BRG
K	957	0	957	0	0	IN-SX	IN-SX
G	1082	0	1082	0	0	5-8	1-8
						5-8	1-8

UNFACTORED REACTIONS

JT	1ST LCASE COMBINED	MAX./MIN. COMPONENT REACTIONS SNOW	LIVE	PERM.LIVE	WIND	DEAD	SOIL
K	682	416 / 0	0 / 0	0 / 0	0 / 0	266 / 0	0 / 0
G	769	484 / 0	0 / 0	0 / 0	0 / 0	285 / 0	0 / 0

BEARING MATERIAL TO BE SPF NO.2 OR BETTER AT JOINT(S) K, G

BRACING

TOP CHORD TO BE SHEATHED OR MAX. PURLIN SPACING = 5.53 FT.
MAX. UNBRACED BOTTOM CHORD LENGTH = 10.00 FT OR RIGID CEILING DIRECTLY APPLIED.

ALL PITCH BREAKS AND PERIMETER CORNER JOINTS MUST BE LATERALLY RESTRAINED.

LOADING

TOTAL LOAD CASES: (4)

CHORDS

MEMB. FR-TO	MAX. FACTORED FORCE (LBS)	FACTORED VERT. LOAD LC1 (PLF) FROM	TO	MAX CSI (LC)	MAX. UNBRAC LENGTH
A- B	-1180 / 0	-78.0	-78.0	0.25 (1)	5.59
B- C	-905 / 0	-78.0	-78.0	0.24 (1)	6.18
C- D	-906 / 0	-78.0	-78.0	0.25 (1)	6.17
D- E	-1209 / 0	-78.0	-78.0	0.26 (1)	5.53
E- F	0 / 28	-78.0	-78.0	0.14 (1)	10.00
K- A	-918 / 0	0.0	0.0	0.09 (1)	7.81
G- E	-1043 / 0	0.0	0.0	0.11 (1)	7.69
K- J	0 / 0	-18.5	-18.5	0.12 (4)	10.00
J- I	0 / 1073	-18.5	-18.5	0.23 (1)	10.00
I- H	0 / 1099	-18.5	-18.5	0.23 (1)	10.00
H- G	0 / 0	-18.5	-18.5	0.12 (4)	10.00

WEBS

MEMB. FR-TO	MAX. FACTORED FORCE (LBS)	MAX CSI (LC)
J- B	-122 / 35	0.03 (1)
B- I	-352 / 0	0.22 (1)
I- C	0 / 506	0.11 (1)
I- D	-380 / 0	0.24 (1)
H- D	-104 / 44	0.02 (1)
A- J	0 / 1098	0.25 (1)
H- E	0 / 1120	0.25 (1)

DESIGN CRITERIA

SPECIFIED LOADS:

TOP CH.	LL	=	21.0	PSF
	DL	=	6.0	PSF
BOT CH.	LL	=	0.0	PSF
	DL	=	7.4	PSF
TOTAL LOAD		=	34.4	PSF

SPACING = 24.0 IN. C/C

THIS TRUSS IS DESIGNED FOR RESIDENTIAL OR SMALL BUILDING REQUIREMENTS OF PART 9, NBCC 2015

THIS DESIGN COMPLIES WITH:
- PART 9 OF BCBC 2018 , ABC 2019
- PART 9 OF OBC 2012 (2019 AMENDMENT)
- CSA 086-14
- TPIC 2014

(55 % OF 23.0 P.S.F. G.S.L. PLUS 8.4 P.S.F. RAIN LOAD) EQUALS 21.0 P.S.F. SPECIFIED ROOF LIVE LOAD

ALLOWABLE DEFL.(LL)= L/360 (0.66")
CALCULATED VERT. DEFL.(LL) = L/ 999 (0.03")
ALLOWABLE DEFL.(TL)= L/360 (0.66")
CALCULATED VERT. DEFL.(TL) = L/ 999 (0.07")

CSI: TC=0.26/1.00 (D-E:1) , BC=0.23/1.00 (H-I:1) , WB=0.25/1.00 (E-H:1) , SSI=0.17/1.00 (D-E:1)

DOL LUMBER=1.00 NAIL=1.00 LS BEND=1.10 COMP=1.10 SHEAR=1.10 TENS= 1.10

COMPANION LIVE LOAD FACTOR = 1.00

TRUSS PLATE MANUFACTURER IS NOT RESPONSIBLE FOR QUALITY CONTROL IN THE TRUSS MANUFACTURING PLANT .

NAIL VALUES

PLATE	GRIP(DRY) (PSI) MAX	MIN	SHEAR (PLI) MAX	MIN	SECTION (PLI) MAX	MIN
MT20	650	371	1747	788	1987	1873

PLATE PLACEMENT TOL. = 0.250 inches

PLATE ROTATION TOL. = 5.0 Deg.

JSI GRIP= 0.70 (J) (INPUT = 0.90)
JSI METAL= 0.31 (E) (INPUT = 1.00)

JOB NAME	TRUSS NAME	QUANTITY	PLY	JOB DESC.	DRWG NO.
343192	J04		1	TRUSS DESC. JT 45147	E22052693

Alpa Roof Truss, Maple

Version 8.530 S Feb 23 2022 MiTek Industries, Inc. Tue Jun 7 14:08:30 2022 Page 1
ID:MF8iiriaTok7DlbpT4B71Xys4PG-N4vbXxgHDNZHEzHQ5ug5BZwc8JUhHBArHpM6C5z8fxV

Scale = 1:20.0

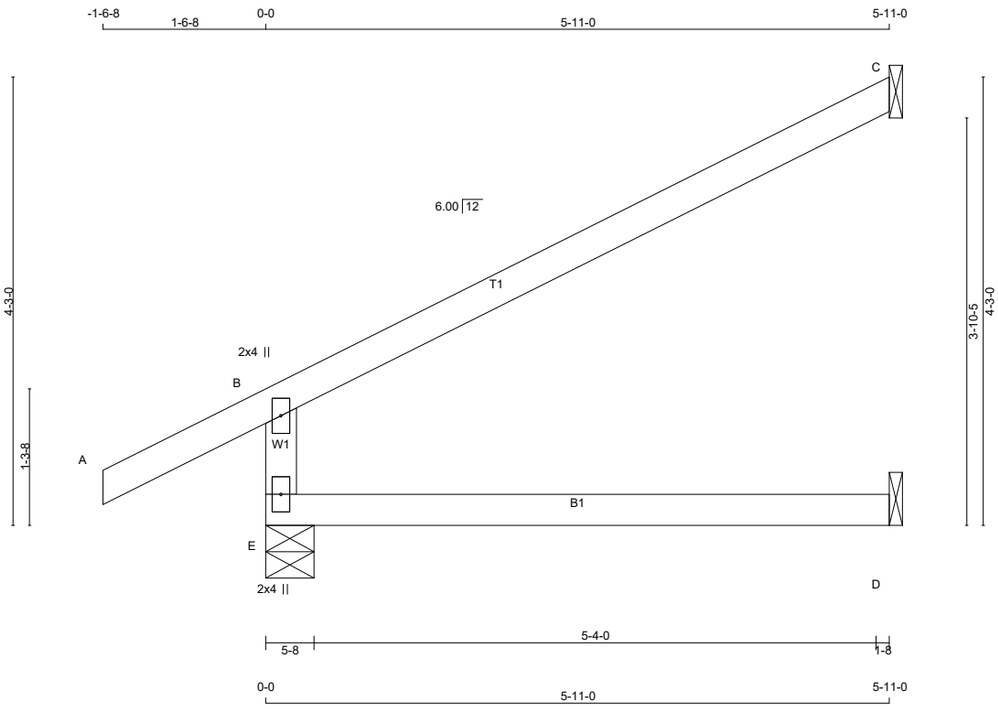

TOTAL WEIGHT = 6 X 17 = 104 lb
[M]

LUMBER
N. L. G. A. RULES

CHORDS	SIZE		LUMBER	DESCR.
E - B	2x4	DRY	No.2	SPF
A - C	2x4	DRY	No.2	SPF
E - D	2x4	DRY	No.2	SPF

DRY: SEASONED LUMBER.

PLATES (table is in inches)

JT	TYPE	PLATES	W	LEN	Y	X
B	TMV+p	MT20	2.0	4.0		
E	BMV1+p	MT20	2.0	4.0		

DIMENSIONS, SUPPORTS AND LOADINGS SPECIFIED BY FABRICATOR TO BE VERIFIED BY BUILDING DESIGNER

BEARINGS

JT	FACTORED GROSS REACTION VERT	HORZ	MAXIMUM FACTORED GROSS REACTION DOWN	HORZ	UPLIFT	INPUT BRG IN-SX	REQRD BRG IN-SX
E	477	0	477	0	0	5-8	1-8
C	173	0	173	0	0	1-8	1-8
D	46	0	51	0	0	1-8	1-8

SEE MITEK STANDARD DETAIL MSD2015-H FOR CONNECTION TO JOINT(S) C , D

UNFACTORED REACTIONS

JT	1ST LCASE COMBINED	MAX./MIN. COMPONENT REACTIONS SNOW	LIVE	PERM.LIVE	WIND	DEAD	SOIL
E	337	223 / 0	0 / 0	0 / 0	0 / 0	115 / 0	0 / 0
C	120	93 / 0	0 / 0	0 / 0	0 / 0	27 / 0	0 / 0
D	36	0 / 0	0 / 0	0 / 0	0 / 0	36 / 0	0 / 0

BEARING MATERIAL TO BE SPF NO.2 OR BETTER AT JOINT(S) E

BRACING
TOP CHORD TO BE SHEATHED OR MAX. PURLIN SPACING = 6.25 FT.
MAX. UNBRACED BOTTOM CHORD LENGTH = 10.00 FT OR RIGID CEILING DIRECTLY APPLIED.

ALL PITCH BREAKS AND PERIMETER CORNER JOINTS MUST BE LATERALLY RESTRAINED.

LOADING
TOTAL LOAD CASES: (4)

C H O R D S

MEMB. FR-TO	MAX. FORCE (LBS)	FACTORED VERT. LOAD (PLF)	LC1 FROM	MAX TO	CSI (LC)	MAX. UNBRAC LENGTH
E- B	-414 / 0	0.0	0.0		0.13 (4)	7.81
A- B	0 / 28	-78.0	-78.0		0.14 (1)	10.00
B- C	-26 / 0	-78.0	-78.0		0.46 (1)	6.25
E- D	0 / 0	-18.5	-18.5		0.13 (4)	10.00

W E B S

MEMB. FR-TO	MAX. FORCE (LBS)	MAX CSI (LC)

DESIGN CRITERIA

SPECIFIED LOADS:

TOP	CH.	LL	=	21.0	PSF
		DL	=	6.0	PSF
BOT	CH.	LL	=	0.0	PSF
		DL	=	7.4	PSF
TOTAL	LOAD		=	34.4	PSF

SPACING = 24.0 IN. C/C

THIS TRUSS IS DESIGNED FOR RESIDENTIAL OR SMALL BUILDING REQUIREMENTS OF PART 9, NBCC 2015

THIS DESIGN COMPLIES WITH:
- PART 9 OF BCBC 2018 , ABC 2019
- PART 9 OF OBC 2012 (2019 AMENDMENT)
- CSA 086-14
- TPIC 2014

DESIGN ASSUMPTIONS
-OVERHANG NOT TO BE ALTERED OR CUT OFF.

(55 % OF 23.0 P.S.F. G.S.L. PLUS 8.4 P.S.F. RAIN LOAD) EQUALS 21.0 P.S.F. SPECIFIED ROOF LIVE LOAD

ALLOWABLE DEFL.(TL)= L/360 (0.20")
CALCULATED VERT. DEFL.(TL) = L/ 999 (0.03")

CSI: TC=0.46/1.00 (B-C:1) , BC=0.13/1.00 (D-E:4) , WB=0.00/1.00 (n/a:0) , SSI=0.20/1.00 (B-C:1)

DOL LUMBER=1.00 NAIL=1.00 LS BEND=1.10 COMP=1.10 SHEAR=1.10 TENS= 1.10

COMPANION LIVE LOAD FACTOR = 1.00

AUTOSOLVE RIGHT HEEL ONLY

TRUSS PLATE MANUFACTURER IS NOT RESPONSIBLE FOR QUALITY CONTROL IN THE TRUSS MANUFACTURING PLANT .

NAIL VALUES

PLATE	GRIP(DRY) (PSI) MAX	MIN	SHEAR (PLI) MAX	MIN	SECTION (PLI) MAX	MIN
MT20	650	371	1747	788	1987	1873

PLATE PLACEMENT TOL. = 0.250 inches

PLATE ROTATION TOL. = 5.0 Deg.

JSI GRIP= 0.23 (B) (INPUT = 0.90)
JSI METAL= 0.17 (B) (INPUT = 1.00)

LATERAL BRACE(S) SHOWN SHALL BE 2X4 SPF#2

JOB NAME	TRUSS NAME	QUANTITY	PLY	JOB DESC.	DRWG NO.
343190	G01	.	1	TRUSS DESC. JT 45147	E22052701

Alpa Roof Truss, Maple

Version 8.530 S Feb 23 2022 MiTek Industries, Inc. Tue Jun 7 13:29:46 2022 Page 1

ID:MF8iiriaTok7DlbpT4B71Xys4PG-Q T1nHYWWKl1Qqcmypz6?UgP9UHLmuMmtFP8doz8gVp

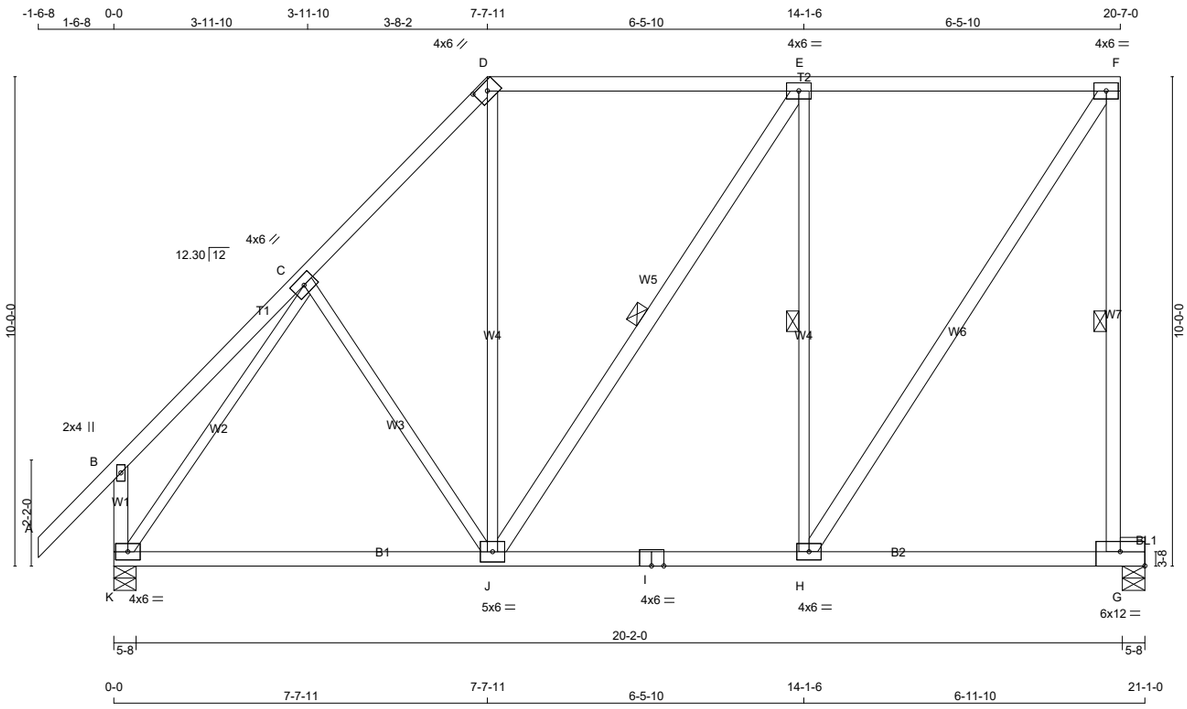

TOTAL WEIGHT = 2 X 119 = 238 lb [M]

LUMBER

N. L. G. A. RULES

CHORDS	SIZE		LUMBER	DESCR.
A - D	2x4	DRY	No.2	SPF
D - F	2x4	DRY	No.2	SPF
G - F	2x4	DRY	No.2	SPF
K - B	2x4	DRY	No.2	SPF
K - I	2x4	DRY	No.2	SPF
I - G	2x4	DRY	No.2	SPF
BEARING BLOCKS				
BL1	2x4	DRY	No.2	SPF
ALL WEBS EXCEPT	2x3	DRY	No.2	SPF
J - E	2x4	DRY	No.2	SPF
H - F	2x4	DRY	No.2	SPF

DRY: SEASONED LUMBER.

PLATES (table is in inches)

JT	TYPE	PLATES	W	LEN	Y	X
B	TMV+p	MT20	2.0	4.0		
C	TMWW-t	MT20	4.0	6.0		
D	TTW-h	MT20	4.0	6.0	2.00	3.00
E	TMWW-t	MT20	4.0	6.0		
F	TMVW-t	MT20	4.0	6.0		
G	BMVK1-t	MT20	6.0	12.0	3.50	Edge
H	BMWW-t	MT20	4.0	6.0		
I	BS-t	MT20	4.0	6.0		
J	BMWWW-t	MT20	5.0	6.0		
K	BMVW1-t	MT20	4.0	6.0		

Edge - INDICATES REFERENCE CORNER OF PLATE TOUCHES EDGE OF CHORD.

LATERAL BRACE(S) SHOWN SHALL BE 2X4 SPF#2

LICENSED PROFESSIONAL ENGINEER
Y. WIDYA
100225448
06/07/2022
PROVINCE OF ONTARIO

DIMENSIONS, SUPPORTS AND LOADINGS SPECIFIED BY FABRICATOR TO BE VERIFIED BY BUILDING DESIGNER

BEARINGS

JT	FACTORED GROSS REACTION VERT	HORZ	MAXIMUM FACTORED GROSS REACTION DOWN	HORZ	UPLIFT	INPUT BRG IN-SX	REQRD BRG IN-SX
G	1126	0	1126	0	0	5-8	5-8
K	1182	0	1182	0	0	5-8	1-8

UNFACTORED REACTIONS

JT	1ST LCASE COMBINED	MAX./MIN. COMPONENT REACTIONS SNOW	LIVE	PERM.LIVE	WIND	DEAD	SOIL
G	814	432 / 0	0 / 0	0 / 0	0 / 0	382 / 0	0 / 0
K	846	501 / 0	0 / 0	0 / 0	0 / 0	344 / 0	0 / 0

BEARING MATERIAL TO BE SPF NO.2 OR BETTER AT JOINT(S) G, K

BRACING

FOR SECTION D-F, MAX. PURLIN SPACING = 2.00 FT.
FOR OTHER SECTIONS, TOP CHORD TO BE SHEATHED OR MAX. PURLIN SPACING = 6.25 FT.
MAX. UNBRACED BOTTOM CHORD LENGTH = 10.00 FT OR RIGID CEILING DIRECTLY APPLIED.

ALL PITCH BREAKS AND PERIMETER CORNER JOINTS MUST BE LATERALLY RESTRAINED.

1 LATERAL BRACE(S) AT 1/ 2 LENGTH OF F-G, E-J, E-H.

END VERTICAL(S) MUST BE SHEATHED OR HAVE BRACES AS INDICATED IN THE MAX. UNBRACED LENGTH COLUMN OF THE TABLE BELOW

LOADING

TOTAL LOAD CASES: (4)

CHORDS

MEMB. FR-TO	MAX. FACTORED FORCE (LBS)	VERT. LOAD LC1 FROM (PLF)	TO	MAX CSI (LC)	MAX. UNBRAC LENGTH
A- B	0 / 46	-78.0	-78.0	0.15 (1)	10.00
B- C	0 / 25	-78.0	-78.0	0.18 (1)	10.00
C- D	-815 / 0	-78.0	-78.0	0.20 (1)	6.25
D- E	-552 / 0	-93.0	-93.0	0.69 (1)	2.00
E- F	-566 / 0	-93.0	-93.0	0.69 (1)	2.00
G- F	-1076 / 0	0.0	0.0	0.52 (1)	6.09
K- B	-243 / 0	0.0	0.0	0.03 (1)	7.81
K- J	0 / 587	-18.5	-18.5	0.30 (4)	10.00
J- I	0 / 566	-18.5	-18.5	0.30 (4)	10.00
I- H	0 / 566	-18.5	-18.5	0.30 (4)	10.00
H- G	0 / 0	-18.5	-18.5	0.16 (4)	10.00

WEBS

MEMB. FR-TO	MAX. FACTORED FORCE (LBS)	MAX CSI (LC)
J- D	0 / 223	0.05 (4)
J- E	-26 / 0	0.02 (1)
H- E	-725 / 0	0.49 (1)
H- F	0 / 1021	0.16 (1)
K- C	-1058 / 0	0.93 (1)
C- J	-66 / 25	0.06 (1)

DESIGN CRITERIA

SPECIFIED LOADS:

TOP CH.	LL	=	21.0	PSF
	DL	=	6.0	PSF
BOT CH.	LL	=	0.0	PSF
	DL	=	7.4	PSF
TOTAL LOAD		=	34.4	PSF

SPACING = 24.0 IN. C/C

LOADING IN FLAT SECTION BASED ON PIGGYBACK TRUSS WITH SLOPES OF 6.00/12 AND -6.00/12 AND RESPECTIVE HEEL HEIGHTS OF 0-0 AND 0-0 AND AN ADDITIONAL DEAD LOAD OF 6.0 P.S.F.

THIS TRUSS IS DESIGNED FOR RESIDENTIAL OR SMALL BUILDING REQUIREMENTS OF PART 9, NBCC 2015

THIS DESIGN COMPLIES WITH:
- PART 9 OF BCBC 2018 , ABC 2019
- PART 9 OF OBC 2012 (2019 AMENDMENT)
- CSA 086-14
- TPIC 2014

(55 % OF 23.0 P.S.F. G.S.L. PLUS 8.4 P.S.F. RAIN LOAD) EQUALS 21.0 P.S.F. SPECIFIED ROOF LIVE LOAD

ALLOWABLE DEFL.(LL)= L/360 (0.69")
CALCULATED VERT. DEFL.(LL) = L/ 999 (0.02")
ALLOWABLE DEFL.(TL)= L/360 (0.69")
CALCULATED VERT. DEFL.(TL) = L/ 999 (0.12")

CSI: TC=0.69/1.00 (E-F:1) , BC=0.30/1.00 (H-J:4) , WB=0.93/1.00 (C-K:1) , SSI=0.29/1.00 (E-F:1)

DOL LUMBER=1.00 NAIL=1.00 LS BEND=1.10 COMP=1.10 SHEAR=1.10 TENS= 1.10

COMPANION LIVE LOAD FACTOR = 1.00

AUTOSOLVE RIGHT HEEL ONLY

TRUSS PLATE MANUFACTURER IS NOT RESPONSIBLE FOR QUALITY CONTROL IN THE TRUSS MANUFACTURING PLANT .

NAIL VALUES

PLATE	GRIP(DRY) (PSI) MAX	MIN	SHEAR (PLI) MAX	MIN	SECTION (PLI) MAX	MIN
MT20	650	371	1747	788	1987	1873

PLATE PLACEMENT TOL. = 0.250 inches

PLATE ROTATION TOL. = 5.0 Deg.

JSI GRIP= 0.75 (C) (INPUT = 0.90)
JSI METAL= 0.24 (C) (INPUT = 1.00)

JOB NAME	TRUSS NAME	QUANTITY	PLY	JOB DESC.		DRWG NO.
343190	G01G		1	TRUSS DESC.	JT 45147	E22052702

Alpa Roof Truss, Maple

Version 8.530 S Feb 23 2022 MiTek Industries, Inc. Tue Jun 7 13:29:48 2022 Page 1

ID:MF8iiriaTok7DlbpT4B71Xys4PG-MMbnCzZm2x0lf7m94D?a4vlt0I01Ez83KZuFiqz8gVn

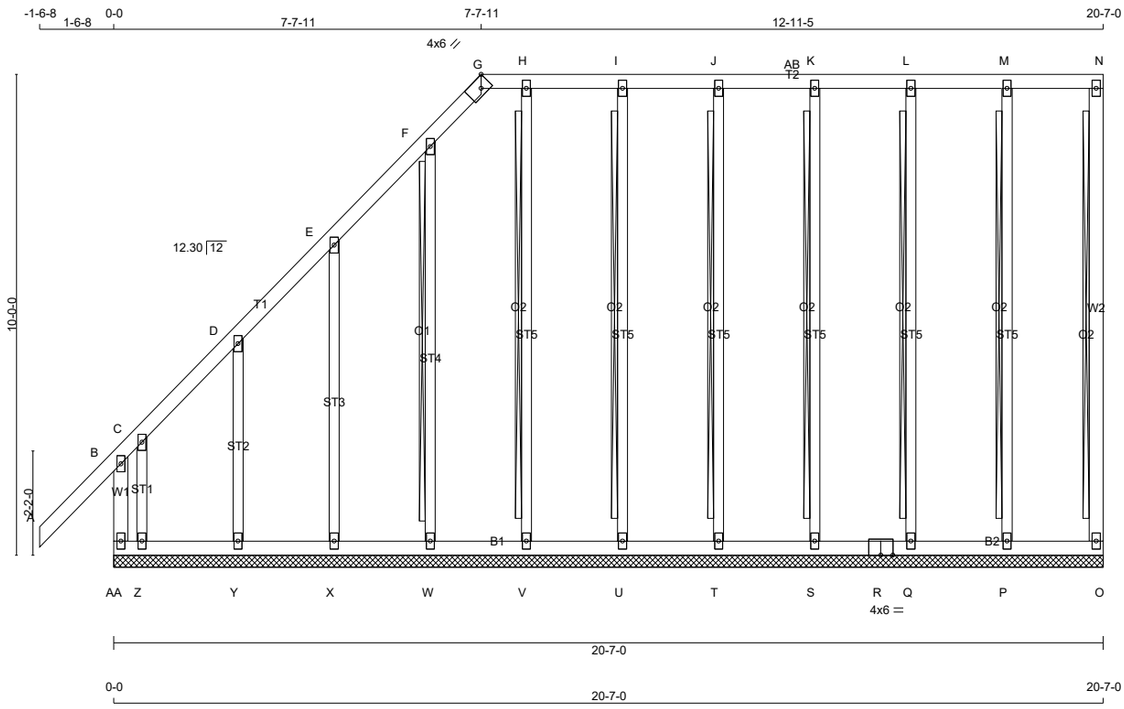

TOTAL WEIGHT = 129 lb [M]

LUMBER

N. L. G. A. RULES

CHORDS	SIZE		LUMBER	DESCR.
AA- B	2x4	DRY	No.2	SPF
A - G	2x4	DRY	No.2	SPF
G - N	2x4	DRY	No.2	SPF
O - N	2x4	DRY	No.2	SPF
AA- R	2x4	DRY	No.2	SPF
R - O	2x4	DRY	No.2	SPF
ALL WEBS	2x3	DRY	No.2	SPF
ALL GABLE WEBS	2x3	DRY	No.2	SPF

DRY: SEASONED LUMBER.

GABLE STUDS SPACED AT 2-0-0 OC.

PLATES (table is in inches)

JT	TYPE	PLATES	W	LEN	Y	X
B	TMV+p	MT20	2.0	4.0		
C, D, E, F, H, I, J, K, L, M						
C	TMW+w	MT20	2.0	4.0		
G	TT-h	MT20	4.0	6.0	Edge 2.50	
N	TMV+p	MT20	2.0	4.0		
O	BMV1+p	MT20	2.0	4.0		
P, Q, S, T, U, V, W, X, Y, Z						
P	BMW1+w	MT20	2.0	4.0		
R	BS-t	MT20	4.0	6.0		
AA	BMV1+p	MT20	2.0	4.0		

Edge - INDICATES REFERENCE CORNER OF PLATE TOUCHES EDGE OF CHORD.

DIMENSIONS, SUPPORTS AND LOADINGS SPECIFIED BY FABRICATOR TO BE VERIFIED BY BUILDING DESIGNER

BEARINGS

THIS TRUSS DESIGNED FOR CONTINUOUS BEARINGS.

THIS TRUSS REQUIRES RIGID SHEATHING ON EXPOSED FACE.

PROVIDE ANCHORAGE AT BEARING JOINT Z FOR 150 LBS FACTORED UPLIFT
BEARING MATERIAL TO BE SPF NO.2 OR BETTER AT JOINT(S)

BRACING

FOR SECTION G-N, MAX. PURLIN SPACING = 2.00 FT.
FOR OTHER SECTIONS, TOP CHORD TO BE SHEATHED OR MAX. PURLIN SPACING = 6.25 FT.
MAX. UNBRACED BOTTOM CHORD LENGTH = 10.00 FT OR RIGID CEILING DIRECTLY APPLIED.

ALL PITCH BREAKS AND PERIMETER CORNER JOINTS MUST BE LATERALLY RESTRAINED.

2x4 DRY SPF No.2 T-BRACE AT N-O, M-P, L-Q, K-S, J-T, I-U, H-V
2x3 DRY SPF No.2 T-BRACE AT F-W

FASTEN T AND I-BRACES TO NARROW EDGE OF WEB WITH ONE ROW PER PLY OF 3" COMMON WIRE NAILS @ 6" O.C. WITH 3" MINIMUM END DISTANCE. BRACE MUST COVER 90% OF WEB LENGTH.

END VERTICAL(S) MUST BE SHEATHED OR HAVE BRACES AS INDICATED IN THE MAX. UNBRACED LENGTH COLUMN OF THE TABLE BELOW

LOADING

TOTAL LOAD CASES: (4)

CHORDS

MEMB. FR-TO	MAX. FACTORED FORCE (LBS)	FACTORED VERT. LOAD (PLF) FROM	TO	LC1	MAX CSI (LC)	MAX. UNBRAC LENGTH
AA- B	-309 / 0	0.0	0.0	0.03 (1)	7.81	
A- B	0 / 46	-78.0	-78.0	0.15 (1)	10.00	
B- C	-121 / 0	-78.0	-78.0	0.13 (1)	6.25	
C- D	-12 / 0	-78.0	-78.0	0.04 (1)	6.25	
D- E	-8 / 0	-78.0	-78.0	0.04 (1)	10.00	
E- F	-4 / 0	-78.0	-78.0	0.04 (1)	10.00	
F- G	-29 / 0	-78.0	-78.0	0.04 (1)	6.25	
G- H	0 / 0	-93.0	-93.0	0.04 (1)	2.00	
H- I	-1 / 0	-93.0	-93.0	0.04 (1)	2.00	
I- J	-1 / 0	-93.0	-93.0	0.04 (1)	2.00	
J-AB	-1 / 0	-93.0	-93.0	0.04 (1)	2.00	
AB- K	-1 / 0	-93.0	-93.0	0.04 (1)	2.00	
K- L	-1 / 0	-93.0	-93.0	0.04 (1)	2.00	
L- M	-1 / 0	-93.0	-93.0	0.04 (1)	2.00	
M- N	-1 / 0	-93.0	-93.0	0.04 (1)	2.00	
O- N	-81 / 0	0.0	0.0	0.01 (1)	7.81	
AA- Z	0 / 7	-18.5	-18.5	0.03 (1)	10.00	
Z- Y	0 / 9	-18.5	-18.5	0.02 (4)	10.00	
Y- X	0 / 6	-18.5	-18.5	0.02 (4)	10.00	
X- W	0 / 3	-18.5	-18.5	0.01 (4)	10.00	
W- V	0 / 1	-18.5	-18.5	0.01 (4)	10.00	
V- U	0 / 1	-18.5	-18.5	0.01 (4)	10.00	
U- T	0 / 1	-18.5	-18.5	0.01 (4)	10.00	
T- S	0 / 1	-18.5	-18.5	0.01 (4)	10.00	
S- R	0 / 1	-18.5	-18.5	0.01 (4)	10.00	
R- Q	0 / 1	-18.5	-18.5	0.01 (4)	10.00	
Q- P	0 / 1	-18.5	-18.5	0.02 (4)	10.00	
P- O	0 / 1	-18.5	-18.5	0.02 (4)	10.00	

WEBS

MEMB. FR-TO	MAX. FACTORED FORCE (LBS)	MAX CSI (LC)
P- M	-197 / 0	0.15 (1)
Q- L	-186 / 0	0.14 (1)
S- K	-186 / 0	0.14 (1)
T- J	-186 / 0	0.14 (1)
U- I	-186 / 0	0.14 (1)
V- H	-187 / 0	0.15 (1)
W- F	-160 / 0	0.21 (1)
X- E	-152 / 0	0.12 (1)
Y- D	-154 / 0	0.05 (1)
Z- C	0 / 58	0.01 (1)

DESIGN CRITERIA

SPECIFIED LOADS:

TOP CH.	LL	=	21.0	PSF
	DL	=	6.0	PSF
BOT CH.	LL	=	0.0	PSF
	DL	=	7.4	PSF
TOTAL LOAD		=	34.4	PSF

SPACING = 24.0 IN. C/C

LOADING IN FLAT SECTION BASED ON PIGGYBACK TRUSS WITH SLOPES OF 6.00/12 AND -6.00/12 AND RESPECTIVE HEEL HEIGHTS OF 0-0 AND 0-0 AND AN ADDITIONAL DEAD LOAD OF 6.0 P.S.F.

THIS TRUSS IS DESIGNED FOR RESIDENTIAL OR SMALL BUILDING REQUIREMENTS OF PART 9, NBCC 2015

THIS DESIGN COMPLIES WITH:
- PART 9 OF BCBC 2018 , ABC 2019
- PART 9 OF OBC 2012 (2019 AMENDMENT)
- CSA 086-14
- TPIC 2014

DESIGN ASSUMPTIONS
-OVERHANG NOT TO BE ALTERED OR CUT OFF.

(55 % OF 23.0 P.S.F. G.S.L. PLUS 8.4 P.S.F. RAIN LOAD) EQUALS 21.0 P.S.F. SPECIFIED ROOF LIVE LOAD

CSI: TC=0.15/1.00 (A-B:1) , BC=0.03/1.00 (Z-AA:1) , WB=0.21/1.00 (F-W:1) , SSI=0.09/1.00 (B-C:1)

DOL LUMBER=1.00 NAIL=1.00 LS BEND=1.10 COMP=1.10 SHEAR=1.10 TENS= 1.10

COMPANION LIVE LOAD FACTOR = 1.00

TRUSS PLATE MANUFACTURER IS NOT RESPONSIBLE FOR QUALITY CONTROL IN THE TRUSS MANUFACTURING PLANT .

NAIL VALUES

PLATE	GRIP(DRY) (PSI) MAX	MIN	SHEAR (PLI) MAX	MIN	SECTION (PLI) MAX	MIN
MT20	650	371	1747	788	1987	1873

PLATE PLACEMENT TOL. = 0.250 inches

PLATE ROTATION TOL. = 5.0 Deg.

JSI GRIP= 0.39 (G) (INPUT = 0.90)
JSI METAL= 0.17 (B) (INPUT = 1.00)

LATERAL BRACE(S) SHOWN SHALL BE 2X4 SPF#2

JOB NAME	TRUSS NAME	QUANTITY	PLY	JOB DESC.		DRWG NO.
343190	G02P		1	TRUSS DESC.	JT 45147	E22052703

Alpa Roof Truss, Maple

Version 8.530 S Feb 23 2022 MiTek Industries, Inc. Tue Jun 7 13:29:49 2022 Page 1

ID:MF8iiriaTok7DlbpT4B71Xys4PG-qZ9APJaOpF8cHHLLdxXpd6I0biL7zSLCZDdoE6z8qVm

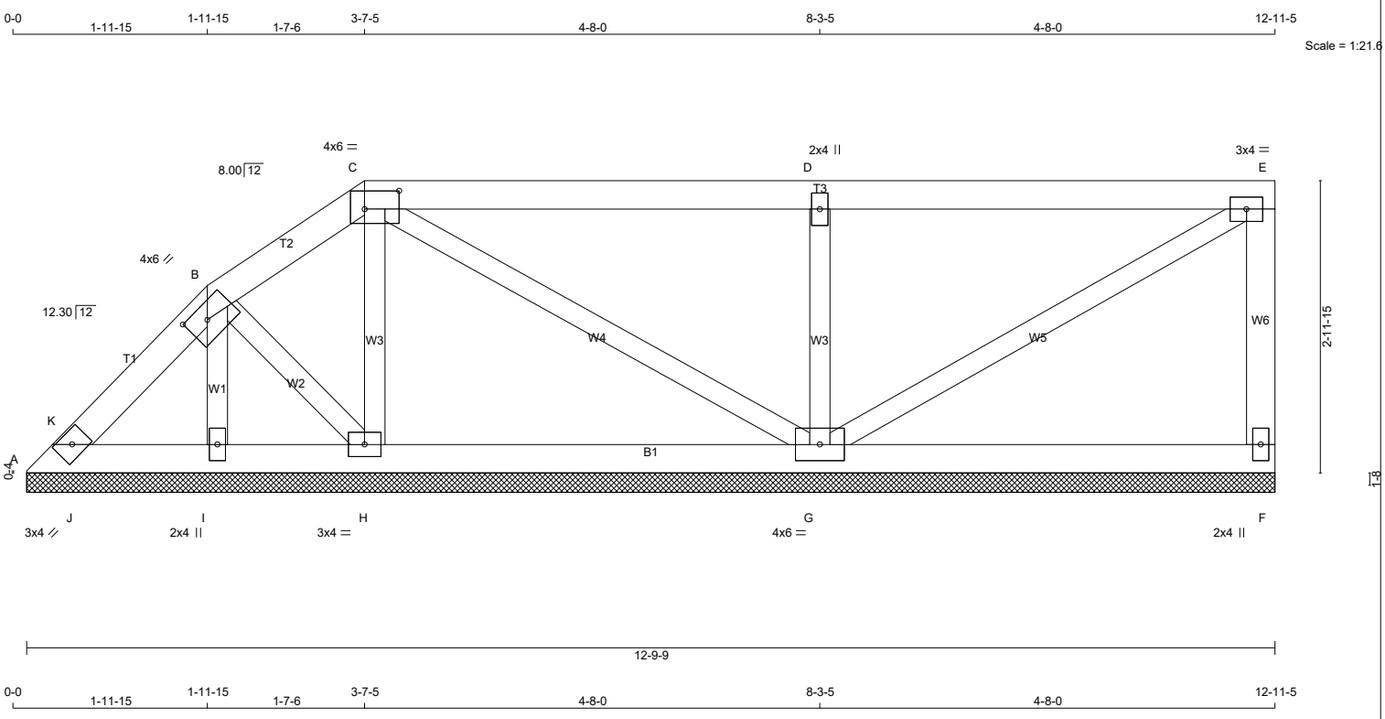

0-0 1-11-15 1-11-15 1-7-6 3-7-5 4-8-0 8-3-5 4-8-0 12-11-5

TOTAL WEIGHT = 48 lb

[M]

LUMBER

N. L. G. A. RULES

CHORDS	SIZE		LUMBER	DESCR.
A - B	2x4	DRY	No.2	SPF
B - C	2x4	DRY	No.2	SPF
C - E	2x4	DRY	No.2	SPF
F - E	2x4	DRY	No.2	SPF
A - F	2x4	DRY	No.2	SPF
ALL WEBS	2x3	DRY	No.2	SPF

DRY: SEASONED LUMBER.

PLATES (table is in inches)

JT	TYPE	PLATES	W	LEN	Y	X
A	TBM1-h	MT20	3.0	4.0		
B	TTWW-h	MT20	4.0	6.0	1.75	2.50
C	TTWW-l	MT20	4.0	6.0	2.25	4.25
D	TMW+w	MT20	2.0	4.0		
E	TMVW-t	MT20	3.0	4.0		
F	BMV1+p	MT20	2.0	4.0		
G	BMWWW1-t	MT20	4.0	6.0		
H	BMWW1-t	MT20	3.0	4.0		
I	BMW1+w	MT20	2.0	4.0		

LATERAL BRACE(S) SHOWN SHALL BE 2X4 SPF#2

LICENSED PROFESSIONAL ENGINEER
V. WIDYA
100225448
06/07/2022
PROVINCE OF ONTARIO

DIMENSIONS, SUPPORTS AND LOADINGS SPECIFIED BY FABRICATOR TO BE VERIFIED BY BUILDING DESIGNER

BEARINGS

JT	FACTORED GROSS REACTION VERT	HORZ	MAXIMUM FACTORED GROSS REACTION DOWN	HORZ	UPLIFT	INPUT BRG IN-SX	REQRD BRG IN-SX
A	93	0	93	0	0	12-9-9	1-8
F	160	0	160	0	0	12-9-9	1-8
I	179	0	179	0	0	12-9-9	1-8
H	224	0	224	0	0	12-9-9	1-8
G	579	0	579	0	0	12-9-9	1-8

UNFACTORED REACTIONS

JT	1ST LCASE COMBINED	MAX./MIN. COMPONENT REACTIONS SNOW	LIVE	PERM.LIVE	WIND	DEAD	SOIL
A	66	43 / 0	0 / 0	0 / 0	0 / 0	23 / 0	0 / 0
F	114	68 / 0	0 / 0	0 / 0	0 / 0	46 / 0	0 / 0
I	127	82 / 0	0 / 0	0 / 0	0 / 0	45 / 0	0 / 0
H	162	86 / 0	0 / 0	0 / 0	0 / 0	76 / 0	0 / 0
G	411	258 / 0	0 / 0	0 / 0	0 / 0	153 / 0	0 / 0

BEARING MATERIAL TO BE SPF NO.2 OR BETTER AT JOINT(S) A, F, I, H, G

BRACING

TOP CHORD TO BE SHEATHED OR MAX. PURLIN SPACING = 6.25 FT.
MAX. UNBRACED BOTTOM CHORD LENGTH = 10.00 FT OR RIGID CEILING DIRECTLY APPLIED.

ALL PITCH BREAKS AND PERIMETER CORNER JOINTS MUST BE LATERALLY RESTRAINED.

LOADING

TOTAL LOAD CASES: (4)

CHORDS

MEMB. FR-TO	MAX. FORCE (LBS)	FACTORED VERT. LOAD (PLF) FROM	TO	LC1	MAX CSI (LC)	MAX. UNBRAC LENGTH
A- K	-19 / 0	-78.0	-78.0	0.01 (1)		6.25
K- B	-10 / 7	-78.0	-78.0	0.03 (1)		10.00
B- C	-15 / 0	-78.0	-78.0	0.03 (1)		6.25
C- D	0 / 18	-78.0	-78.0	0.29 (1)		10.00
D- E	0 / 18	-78.0	-78.0	0.29 (1)		10.00
F- E	-126 / 0	0.0	0.0	0.02 (1)		7.81
A- J	-6 / 0	-18.5	-18.5	0.04 (1)		10.00
J- I	-3 / 9	-18.5	-18.5	0.04 (1)		10.00
I- H	-5 / 1	-18.5	-18.5	0.05 (4)		10.00
H- G	-2 / 5	-18.5	-18.5	0.10 (4)		10.00
G- F	0 / 0	-18.5	-18.5	0.10 (4)		10.00

WEBS

MEMB. FR-TO	MAX. FORCE (LBS)	MAX CSI (LC)
I- B	-128 / 0	0.02 (1)
B- H	0 / 15	0.00 (1)
H- C	-178 / 0	0.03 (1)
C- G	-27 / 0	0.01 (1)
G- D	-454 / 0	0.08 (1)
G- E	-21 / 0	0.01 (1)
J- K	-57 / 0	0.00 (1)

DESIGN CRITERIA

SPECIFIED LOADS:

TOP CH.	LL	=	21.0	PSF
	DL	=	6.0	PSF
BOT CH.	LL	=	0.0	PSF
	DL	=	7.4	PSF
TOTAL LOAD		=	34.4	PSF

SPACING = 24.0 IN. C/C

LOADING IN FLAT SECTION BASED ON A SLOPE OF 2.00/12 MINIMUM

THIS TRUSS IS DESIGNED FOR RESIDENTIAL OR SMALL BUILDING REQUIREMENTS OF PART 9, NBCC 2015

THIS DESIGN COMPLIES WITH:
- PART 9 OF BCBC 2018 , ABC 2019
- PART 9 OF OBC 2012 (2019 AMENDMENT)
- CSA 086-14
- TPIC 2014

(55 % OF 23.0 P.S.F. G.S.L. PLUS 8.4 P.S.F. RAIN LOAD) EQUALS 21.0 P.S.F. SPECIFIED ROOF LIVE LOAD

CSI: TC=0.29/1.00 (C-D:1) , BC=0.10/1.00 (G-H:4) , WB=0.08/1.00 (D-G:1) , SSI=0.18/1.00 (D-E:1)

DOL LUMBER=1.00 NAIL=1.00 LS BEND=1.10 COMP=1.10 SHEAR=1.10 TENS= 1.10

COMPANION LIVE LOAD FACTOR = 1.00

TRUSS PLATE MANUFACTURER IS NOT RESPONSIBLE FOR QUALITY CONTROL IN THE TRUSS MANUFACTURING PLANT .

NAIL VALUES

PLATE	GRIP(DRY) (PSI) MAX	MIN	SHEAR (PLI) MAX	MIN	SECTION (PLI) MAX	MIN
MT20	650	371	1747	788	1987	1873

PLATE PLACEMENT TOL. = 0.250 inches

PLATE ROTATION TOL. = 5.0 Deg.

JSI GRIP= 0.23 (D) (INPUT = 0.90)
JSI METAL= 0.10 (D) (INPUT = 1.00)

JOB NAME	TRUSS NAME	QUANTITY	PLY	JOB DESC.	DRWG NO.
343190	G03P	.	1	TRUSS DESC. JT 45147	E22052704

Alpa Roof Truss, Maple

Version 8.530 S Feb 23 2022 MiTek Industries, Inc. Tue Jun 7 13:29:50 2022 Page 1
ID:MF8iiriaTok7DlbpT4B71Xys4PG-IljYdeb0aYGTuRwYBe229Kq8X5fciv2MotNMmZz8qVI

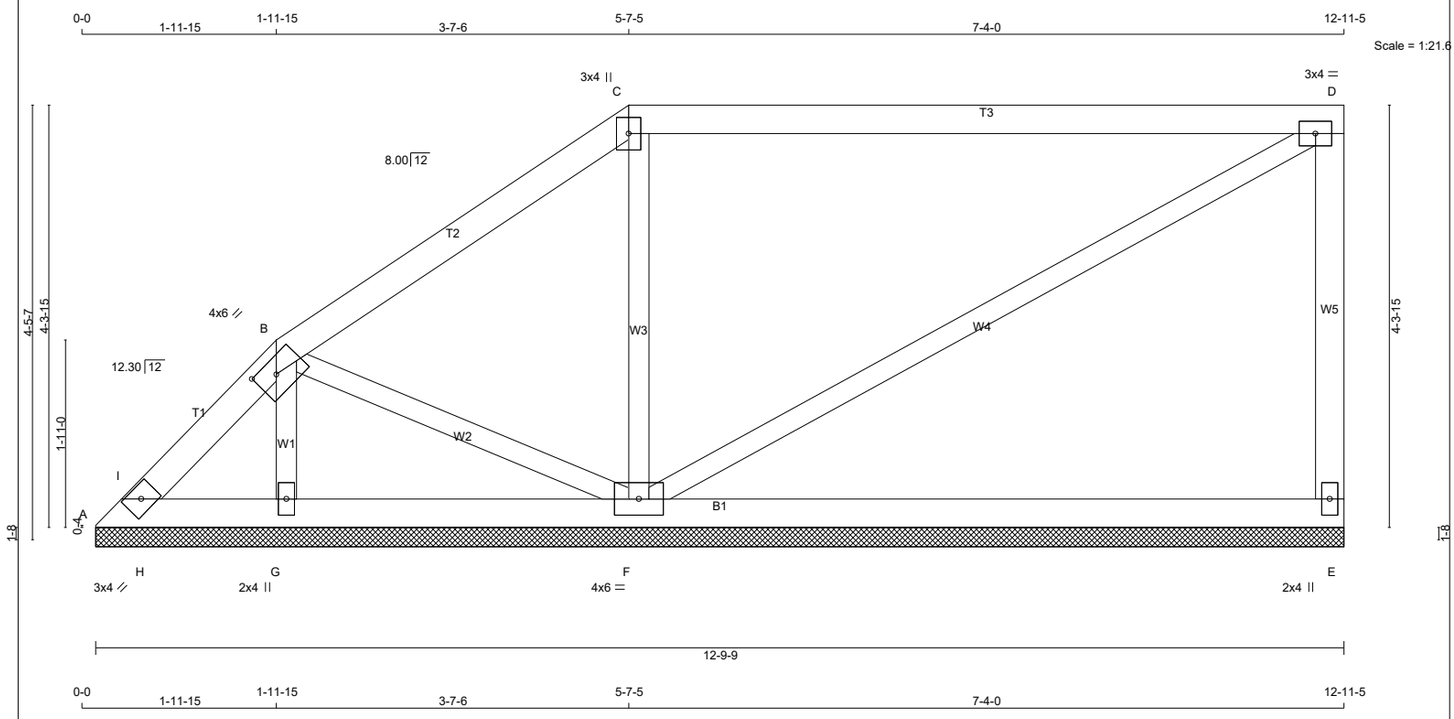

TOTAL WEIGHT = 2 X 49 = 97 lb
[M]

LUMBER

N. L. G. A. RULES

CHORDS	SIZE		LUMBER	DESCR.
A - B	2x4	DRY	No.2	SPF
B - C	2x4	DRY	No.2	SPF
C - D	2x4	DRY	2100F 1.8E	SPF
E - D	2x4	DRY	No.2	SPF
A - E	2x4	DRY	No.2	SPF
ALL WEBS	2x3	DRY	No.2	SPF

DRY: SEASONED LUMBER.

PLATES (table is in inches)

JT	TYPE	PLATES	W	LEN	Y	X
A	TBM1-h	MT20	3.0	4.0		
B	TTWW-h	MT20	4.0	6.0	1.75	2.50
C	TTW+p	MT20	3.0	4.0		
D	TMVW-t	MT20	3.0	4.0		
E	BMV1+p	MT20	2.0	4.0		
F	BMWWW1-t	MT20	4.0	6.0		
G	BMW1+w	MT20	2.0	4.0		

DIMENSIONS, SUPPORTS AND LOADINGS SPECIFIED BY FABRICATOR TO BE VERIFIED BY BUILDING DESIGNER

BEARINGS

JT	FACTORED GROSS REACTION VERT	HORZ	MAXIMUM FACTORED GROSS REACTION DOWN	HORZ	UPLIFT	INPUT BRG IN-SX	REQRD BRG IN-SX
A	103	0	103	0	0	12-9-9	1-8
E	344	0	344	0	0	12-9-9	1-8
G	245	0	245	0	0	12-9-9	1-8
F	542	0	542	0	0	12-9-9	1-8

UNFACTORED REACTIONS

JT	1ST LCASE COMBINED	MAX./MIN. COMPONENT REACTIONS SNOW	LIVE	PERM.LIVE	WIND	DEAD	SOIL
A	73	47 / 0	0 / 0	0 / 0	0 / 0	26 / 0	0 / 0
E	244	157 / 0	0 / 0	0 / 0	0 / 0	87 / 0	0 / 0
G	173	118 / 0	0 / 0	0 / 0	0 / 0	55 / 0	0 / 0
F	390	215 / 0	0 / 0	0 / 0	0 / 0	175 / 0	0 / 0

BEARING MATERIAL TO BE SPF NO.2 OR BETTER AT JOINT(S) A, E, G, F

BRACING

TOP CHORD TO BE SHEATHED OR MAX. PURLIN SPACING = 6.25 FT.
MAX. UNBRACED BOTTOM CHORD LENGTH = 10.00 FT OR RIGID CEILING DIRECTLY APPLIED.

ALL PITCH BREAKS AND PERIMETER CORNER JOINTS MUST BE LATERALLY RESTRAINED.

LOADING

TOTAL LOAD CASES: (4)

CHORDS

MEMB. FR-TO	MAX. FORCE (LBS)	FACTORED VERT. LOAD (PLF) FROM	TO	LC1 CSI	MAX (LC)	MAX. UNBRAC LENGTH
A- I	-27 / 0	-78.0	-78.0	0.02	(4)	6.25
I- B	-13 / 11	-78.0	-78.0	0.03	(1)	6.25
B- C	-21 / 0	-78.0	-78.0	0.17	(1)	6.25
C- D	-7 / 0	-78.0	-78.0	0.47	(1)	10.00
E- D	-290 / 0	0.0	0.0	0.09	(1)	7.81
A- H	-8 / 0	-18.5	-18.5	0.04	(1)	10.00
H- G	-4 / 13	-18.5	-18.5	0.04	(1)	10.00
G- F	-8 / 0	-18.5	-18.5	0.22	(4)	10.00
F- E	0 / 0	-18.5	-18.5	0.22	(4)	10.00

WEBS

MEMB. FR-TO	MAX. FORCE (LBS)	MAX CSI (LC)
G- B	-206 / 0	0.03 (1)
B- F	0 / 20	0.00 (1)
F- C	-415 / 0	0.12 (1)
F- D	0 / 8	0.00 (1)
H- I	-49 / 6	0.00 (1)

DESIGN CRITERIA

SPECIFIED LOADS:

TOP CH.	LL	=	21.0	PSF
	DL	=	6.0	PSF
BOT CH.	LL	=	0.0	PSF
	DL	=	7.4	PSF
TOTAL LOAD		=	34.4	PSF

SPACING = 24.0 IN. C/C

LOADING IN FLAT SECTION BASED ON A SLOPE OF 2.00/12 MINIMUM

THIS TRUSS IS DESIGNED FOR RESIDENTIAL OR SMALL BUILDING REQUIREMENTS OF PART 9, NBCC 2015

THIS DESIGN COMPLIES WITH:
- PART 9 OF BCBC 2018 , ABC 2019
- PART 9 OF OBC 2012 (2019 AMENDMENT)
- CSA 086-14
- TPIC 2014

(55 % OF 23.0 P.S.F. G.S.L. PLUS 8.4 P.S.F. RAIN LOAD) EQUALS 21.0 P.S.F. SPECIFIED ROOF LIVE LOAD

CSI: TC=0.47/1.00 (C-D:1) , BC=0.22/1.00 (F-G:4) , WB=0.12/1.00 (C-F:1) , SSI=0.22/1.00 (C-D:1)

DOL LUMBER=1.00 NAIL=1.00 LS BEND=1.10 COMP=1.10 SHEAR=1.10 TENS= 1.10

COMPANION LIVE LOAD FACTOR = 1.00

TRUSS PLATE MANUFACTURER IS NOT RESPONSIBLE FOR QUALITY CONTROL IN THE TRUSS MANUFACTURING PLANT .

NAIL VALUES

PLATE	GRIP(DRY) (PSI) MAX	MIN	SHEAR (PLI) MAX	MIN	SECTION (PLI) MAX	MIN
MT20	650	371	1747	788	1987	1873

PLATE PLACEMENT TOL. = 0.250 inches

PLATE ROTATION TOL. = 5.0 Deg.

JSI GRIP= 0.38 (C) (INPUT = 0.90)
JSI METAL= 0.06 (C) (INPUT = 1.00)

LATERAL BRACE(S) SHOWN SHALL BE 2X4 SPF#2

JOB NAME	TRUSS NAME	QUANTITY	PLY	JOB DESC.	DRWG NO.
343190	H05G		1	TRUSS DESC. JT 45147	E22052709

Alpa Roof Truss, Maple

Version 8.530 S Feb 23 2022 MiTek Industries, Inc. Tue Jun 7 13:29:59 2022 Page 1
ID:MF8iiriaTok7DlbpT4B71Xys4PG-XUmyWjigSJOBTq6GD1i91DinxknlJyzgsm2KbXz8gVc

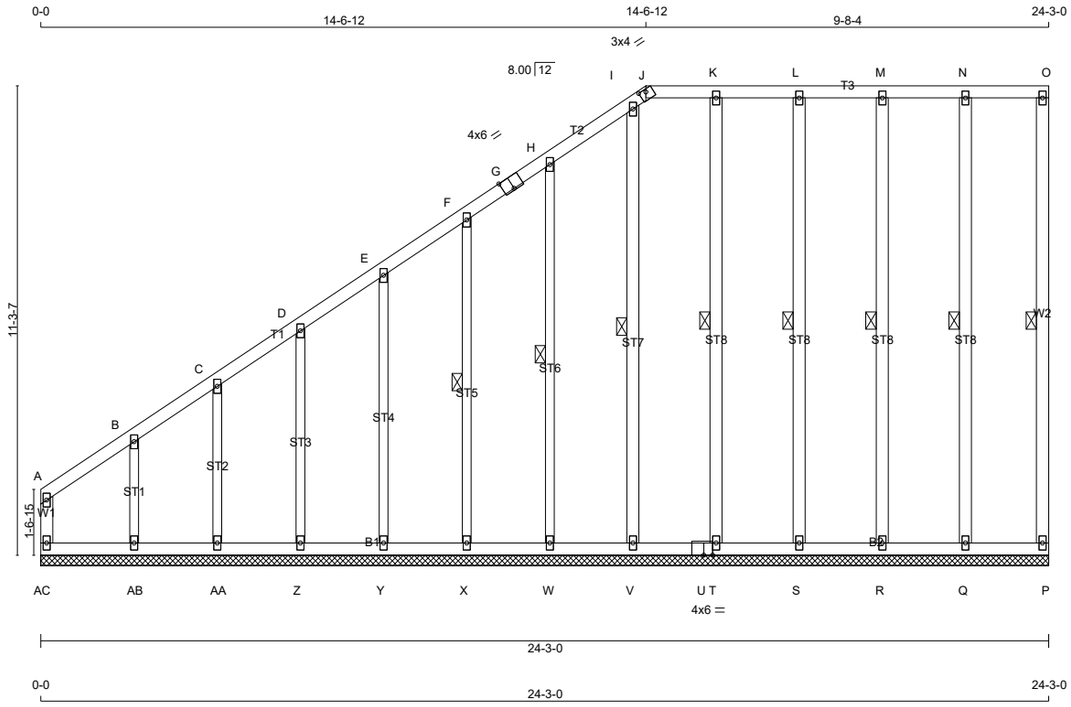

TOTAL WEIGHT = 162 lb

LUMBER
N. L. G. A. RULES

CHORDS	SIZE		LUMBER	DESCR.
AC- A	2x4	DRY	No.2	SPF
A - G	2x4	DRY	No.2	SPF
G - J	2x4	DRY	No.2	SPF
J - O	2x4	DRY	No.2	SPF
P - O	2x4	DRY	No.2	SPF
AC- U	2x4	DRY	No.2	SPF
U - P	2x4	DRY	No.2	SPF
ALL WEBS	2x3	DRY	No.2	SPF
EXCEPT				
Q - N	2x4	DRY	No.2	SPF
R - M	2x4	DRY	No.2	SPF
S - L	2x4	DRY	No.2	SPF
T - K	2x4	DRY	No.2	SPF
V - I	2x4	DRY	No.2	SPF
ALL GABLE WEBS				
	2x3	DRY	No.2	SPF
EXCEPT				
ST1	2x4	DRY	No.2	SPF
ST2	2x4	DRY	No.2	SPF
ST3	2x4	DRY	No.2	SPF
ST4	2x4	DRY	No.2	SPF
ST5	2x4	DRY	No.2	SPF

DRY: SEASONED LUMBER.

GABLE STUDS SPACED AT 2-0-0 OC.

PLATES (table is in inches)

JT	TYPE	PLATES	W	LEN	Y	X
A	TMV+p	MT20	2.0	4.0		
B, C, D, E, F, H, I, K, L, M, N						
B	TMW+w	MT20	2.0	4.0		
G	TS-t	MT20	4.0	6.0	Edge	3.00
J	TT-h	MT20	3.0	4.0	0.75	2.00
O	TMV+p	MT20	2.0	4.0		
P	BMV1+p	MT20	2.0	4.0		
Q, R, S, T, V, W, X, Y, Z, AA, AB						
Q	BMW1+w	MT20	2.0	4.0		
U	BS-t	MT20	4.0	6.0		2.50
AC	BMV1+p	MT20	2.0	4.0		

Edge - INDICATES REFERENCE CORNER OF PLATE TOUCHES EDGE OF CHORD.

LATERAL BRACE(S) SHOWN SHALL BE 2X4 SPF#2

DIMENSIONS, SUPPORTS AND LOADINGS SPECIFIED BY FABRICATOR TO BE VERIFIED BY BUILDING DESIGNER

BEARINGS

THIS TRUSS DESIGNED FOR CONTINUOUS BEARINGS.

THIS TRUSS REQUIRES RIGID SHEATHING ON EXPOSED FACE.

BEARING MATERIAL TO BE SPF NO.2 OR BETTER AT JOINT(S)

BRACING
TOP CHORD TO BE SHEATHED OR MAX. PURLIN SPACING = 6.25 FT.
MAX. UNBRACED BOTTOM CHORD LENGTH = 10.00 FT OR RIGID CEILING DIRECTLY APPLIED.

ALL PITCH BREAKS AND PERIMETER CORNER JOINTS MUST BE LATERALLY RESTRAINED.

1 LATERAL BRACE(S) AT 1/ 2 LENGTH OF O-P, N-Q, M-R, L-S, K-T, I-V, H-W, F-X.

END VERTICAL(S) MUST BE SHEATHED OR HAVE BRACES AS INDICATED IN THE MAX. UNBRACED LENGTH COLUMN OF THE TABLE BELOW

LOADING
TOTAL LOAD CASES: (4)

CHORDS

MEMB. FR-TO	MAX. FACTORED FORCE (LBS)	VERT. LOAD (PLF) FROM	TO	LC1 MAX CSI (LC)	MAX. UNBRAC LENGTH
AC- A	-90 / 0	0.0	0.0	0.02 (1)	7.81
A- B	-17 / 0	-78.0	-78.0	0.04 (1)	6.25
B- C	-17 / 0	-78.0	-78.0	0.04 (1)	6.25
C- D	-11 / 0	-78.0	-78.0	0.04 (1)	6.25
D- E	-8 / 0	-78.0	-78.0	0.04 (1)	10.00
E- F	-6 / 0	-78.0	-78.0	0.04 (1)	10.00
F- G	-5 / 0	-78.0	-78.0	0.04 (1)	10.00
G- H	-5 / 0	-78.0	-78.0	0.04 (1)	10.00
H- I	-2 / 0	-78.0	-78.0	0.04 (1)	10.00
I- J	-39 / 0	-78.0	-78.0	0.04 (1)	6.25
J- K	0 / 0	-78.0	-78.0	0.04 (1)	10.00
K- L	0 / 0	-78.0	-78.0	0.04 (1)	10.00
L- M	0 / 0	-78.0	-78.0	0.04 (1)	10.00
M- N	0 / 0	-78.0	-78.0	0.04 (1)	10.00
N- O	0 / 0	-78.0	-78.0	0.04 (1)	10.00
P- O	-68 / 0	0.0	0.0	0.01 (1)	6.25
AC-AB	0 / 17	-18.5	-18.5	0.02 (4)	10.00
AB-AA	0 / 12	-18.5	-18.5	0.02 (4)	10.00
AA- Z	0 / 9	-18.5	-18.5	0.02 (4)	10.00
Z- Y	0 / 7	-18.5	-18.5	0.02 (4)	10.00
Y- X	0 / 5	-18.5	-18.5	0.01 (4)	10.00
X- W	0 / 4	-18.5	-18.5	0.01 (4)	10.00
W- V	0 / 2	-18.5	-18.5	0.01 (4)	10.00
V- U	0 / 0	-18.5	-18.5	0.01 (4)	10.00
U- T	0 / 0	-18.5	-18.5	0.01 (4)	10.00
T- S	0 / 0	-18.5	-18.5	0.01 (4)	10.00
S- R	0 / 0	-18.5	-18.5	0.01 (4)	10.00
R- Q	0 / 0	-18.5	-18.5	0.02 (4)	10.00
Q- P	0 / 0	-18.5	-18.5	0.02 (4)	10.00

WEBS

MEMB. FR-TO	MAX. FACTORED FORCE (LBS)	MAX CSI (LC)
Q- N	-167 / 0	0.11 (1)
R- M	-155 / 0	0.10 (1)
S- L	-155 / 0	0.10 (1)
T- K	-159 / 0	0.11 (1)
V- I	-160 / 0	0.10 (1)
W- H	-152 / 0	0.10 (1)
X- F	-156 / 0	0.07 (1)
Y- E	-154 / 0	0.13 (1)
Z- D	-155 / 0	0.08 (1)
AA- C	-150 / 0	0.04 (1)
AB- B	-169 / 0	0.03 (1)

[M]

DESIGN CRITERIA

SPECIFIED LOADS:

TOP CH.	LL	=	21.0	PSF
	DL	=	6.0	PSF
BOT CH.	LL	=	0.0	PSF
	DL	=	7.4	PSF
TOTAL LOAD		=	34.4	PSF

SPACING = 24.0 IN. C/C

LOADING IN FLAT SECTION BASED ON A SLOPE OF 2.00/12 MINIMUM

THIS TRUSS IS DESIGNED FOR RESIDENTIAL OR SMALL BUILDING REQUIREMENTS OF PART 9, NBCC 2015

THIS DESIGN COMPLIES WITH:
- PART 9 OF BCBC 2018 , ABC 2019
- PART 9 OF OBC 2012 (2019 AMENDMENT)
- CSA 086-14
- TPIC 2014

(55 % OF 23.0 P.S.F. G.S.L. PLUS 8.4 P.S.F. RAIN LOAD) EQUALS 21.0 P.S.F. SPECIFIED ROOF LIVE LOAD

CSI: TC=0.04/1.00 (A-B:1) , BC=0.02/1.00 (AB-AC:4) , WB=0.13/1.00 (E-Y:1) , SSI=0.07/1.00 (N-O:1)

DOL LUMBER=1.00 NAIL=1.00 LS BEND=1.10 COMP=1.10 SHEAR=1.10 TENS= 1.10

COMPANION LIVE LOAD FACTOR = 1.00

TRUSS PLATE MANUFACTURER IS NOT RESPONSIBLE FOR QUALITY CONTROL IN THE TRUSS MANUFACTURING PLANT .

NAIL VALUES

PLATE	GRIP(DRY) (PSI) MAX	MIN	SHEAR (PLI) MAX	MIN	SECTION (PLI) MAX	MIN
MT20	650	371	1747	788	1987	1873

PLATE PLACEMENT TOL. = 0.250 inches

PLATE ROTATION TOL. = 5.0 Deg.

JSI GRIP= 0.51 (J) (INPUT = 0.90)
JSI METAL= 0.09 (B) (INPUT = 1.00)

JOB NAME	TRUSS NAME	QUANTITY	PLY	JOB DESC.	DRWG NO.
343190	H06		1	TRUSS DESC. JT 45147	E22052710

Alpa Roof Truss, Maple

Version 8.530 S Feb 23 2022 MiTek Industries, Inc. Tue Jun 7 13:30:00 2022 Page 1
ID:MF8iiriaTok7DlbpT4B71Xys4PG-?gKKj3iIDdW25zhTnlDOZRFpo72e2IOq5Qou7 z8gVb

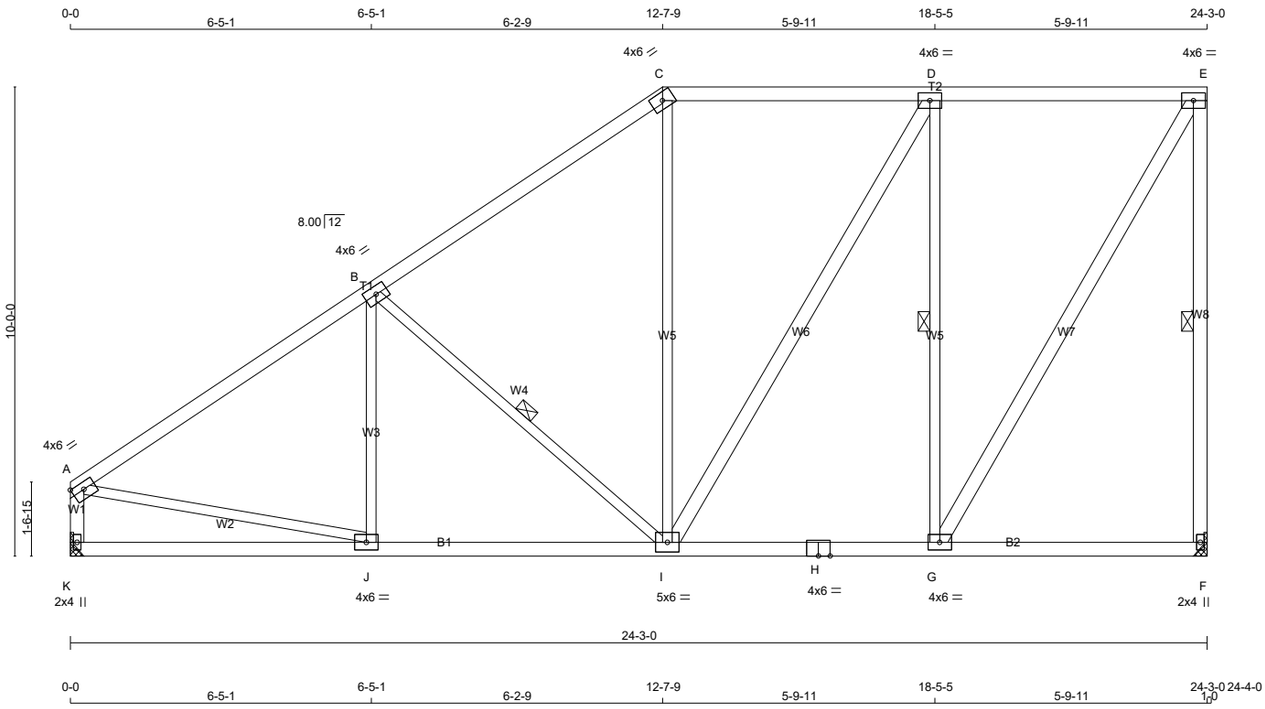

TOTAL WEIGHT = 126 lb

[M][F]

LUMBER

N. L. G. A. RULES

CHORDS	SIZE		LUMBER	DESCR.
A - C	2x4	DRY	No.2	SPF
C - E	2x4	DRY	No.2	SPF
F - E	2x4	DRY	No.2	SPF
K - A	2x4	DRY	No.2	SPF
K - H	2x4	DRY	No.2	SPF
H - F	2x4	DRY	No.2	SPF
ALL WEBS	2x3	DRY	No.2	SPF
EXCEPT				
I - D	2x4	DRY	No.2	SPF
G - E	2x4	DRY	No.2	SPF

DRY: SEASONED LUMBER.

PLATES (table is in inches)

JT	TYPE	PLATES	W	LEN	Y	X
A	TMVW-t	MT20	4.0	6.0	1.75	Edge
B	TMWW-t	MT20	4.0	6.0		
C	TTW-h	MT20	4.0	6.0		
D	TMWW-t	MT20	4.0	6.0		
E	TMVW-t	MT20	4.0	6.0		
F	BMV1+p	MT20	2.0	4.0		
G	BMWW-t	MT20	4.0	6.0		
H	BS-t	MT20	4.0	6.0		
I	BMWWW-t	MT20	5.0	6.0		
J	BMWW-t	MT20	4.0	6.0		
K	BMV1+p	MT20	2.0	4.0		

Edge - INDICATES REFERENCE CORNER OF PLATE TOUCHES EDGE OF CHORD.

LATERAL BRACE(S) SHOWN SHALL BE 2X4 SPF#2

LICENSED PROFESSIONAL ENGINEER
V. WIDYA
100225448
06/07/2022
PROVINCE OF ONTARIO

DIMENSIONS, SUPPORTS AND LOADINGS SPECIFIED BY FABRICATOR TO BE VERIFIED BY BUILDING DESIGNER

BEARINGS

JT	FACTORED GROSS REACTION VERT	HORZ	MAXIMUM FACTORED GROSS REACTION DOWN	HORZ	UPLIFT	INPUT BRG	REQRD BRG
F	1302	0	1302	0	0	MECHANICAL	
K	1211	0	1211	0	0	MECHANICAL	

A SUITABLE HANGER/MECHANICAL CONNECTION IS REQUIRED AT JOINT F, K. MINIMUM BEARING LENGTH AT JOINT F = 1-8, JOINT K = 1-8.

UNFACTORED REACTIONS

JT	1ST LCASE COMBINED	MAX./MIN. COMPONENT REACTIONS SNOW	LIVE	PERM.LIVE	WIND	DEAD	SOIL
F	940	509 / 0	0 / 0	0 / 0	0 / 0	431 / 0	0 / 0
K	867	509 / 0	0 / 0	0 / 0	0 / 0	358 / 0	0 / 0

BRACING

FOR SECTION C-E, MAX. PURLIN SPACING = 2.00 FT.
FOR OTHER SECTIONS, TOP CHORD TO BE SHEATHED OR MAX. PURLIN SPACING = 5.08 FT.
MAX. UNBRACED BOTTOM CHORD LENGTH = 10.00 FT OR RIGID CEILING DIRECTLY APPLIED.

ALL PITCH BREAKS AND PERIMETER CORNER JOINTS MUST BE LATERALLY RESTRAINED.

1 LATERAL BRACE(S) AT 1/ 2 LENGTH OF E-F, B-I, D-G.

END VERTICAL(S) MUST BE SHEATHED OR HAVE BRACES AS INDICATED IN THE MAX. UNBRACED LENGTH COLUMN OF THE TABLE BELOW

LOADING

TOTAL LOAD CASES: (4)

CHORDS

MEMB. FR-TO	MAX. FACTORED FORCE (LBS)	FACTORED VERT. LOAD LC1 (PLF) FROM	TO	MAX CSI (LC)	MAX. UNBRAC LENGTH
A- B	-1322 / 0	-78.0	-78.0	0.46 (1)	5.08
B- C	-979 / 0	-78.0	-78.0	0.42 (1)	5.74
C- D	-787 / 0	-93.0	-93.0	0.41 (1)	2.00
D- E	-631 / 0	-93.0	-93.0	0.41 (1)	2.00
F- E	-1259 / 0	0.0	0.0	0.61 (1)	5.74
K- A	-1163 / 0	0.0	0.0	0.12 (1)	7.39
K- J	0 / 0	-18.5	-18.5	0.18 (4)	10.00
J- I	0 / 1127	-18.5	-18.5	0.30 (4)	10.00
I- H	0 / 631	-18.5	-18.5	0.22 (4)	10.00
H- G	0 / 631	-18.5	-18.5	0.22 (4)	10.00
G- F	0 / 0	-18.5	-18.5	0.15 (4)	10.00

WEBS

MEMB. FR-TO	MAX. FACTORED FORCE (LBS)	MAX CSI (LC)
J- B	-87 / 59	0.05 (1)
B- I	-454 / 0	0.22 (1)
I- C	0 / 138	0.04 (4)
I- D	0 / 308	0.05 (1)
G- D	-935 / 0	0.64 (1)
G- E	0 / 1229	0.20 (1)
A- J	0 / 1148	0.26 (1)

DESIGN CRITERIA

SPECIFIED LOADS:

TOP CH.	LL	=	21.0	PSF
	DL	=	6.0	PSF
BOT CH.	LL	=	0.0	PSF
	DL	=	7.4	PSF
TOTAL LOAD		=	34.4	PSF

SPACING = 24.0 IN. C/C

LOADING IN FLAT SECTION BASED ON PIGGYBACK TRUSS WITH SLOPES OF 6.00/12 AND -6.00/12 AND RESPECTIVE HEEL HEIGHTS OF 0-0 AND 0-0 AND AN ADDITIONAL DEAD LOAD OF 6.0 P.S.F.

THIS TRUSS IS DESIGNED FOR RESIDENTIAL OR SMALL BUILDING REQUIREMENTS OF PART 9, NBCC 2015

THIS DESIGN COMPLIES WITH:
- PART 9 OF BCBC 2018 , ABC 2019
- PART 9 OF OBC 2012 (2019 AMENDMENT)
- CSA 086-14
- TPIC 2014

(55 % OF 23.0 P.S.F. G.S.L. PLUS 8.4 P.S.F. RAIN LOAD) EQUALS 21.0 P.S.F. SPECIFIED ROOF LIVE LOAD

ALLOWABLE DEFL.(LL)= L/360 (0.81")
CALCULATED VERT. DEFL.(LL) = L/ 999 (0.04")
ALLOWABLE DEFL.(TL)= L/360 (0.81")
CALCULATED VERT. DEFL.(TL) = L/ 999 (0.09")

CSI: TC=0.61/1.00 (E-F:1) , BC=0.30/1.00 (I-J:4) , WB=0.64/1.00 (D-G:1) , SSI=0.26/1.00 (D-E:1)

DOL LUMBER=1.00 NAIL=1.00 LS BEND=1.10 COMP=1.10 SHEAR=1.10 TENS= 1.10

COMPANION LIVE LOAD FACTOR = 1.00

TRUSS PLATE MANUFACTURER IS NOT RESPONSIBLE FOR QUALITY CONTROL IN THE TRUSS MANUFACTURING PLANT .

NAIL VALUES

PLATE	GRIP(DRY) (PSI) MAX	MIN	SHEAR (PLI) MAX	MIN	SECTION (PLI) MAX	MIN
MT20	650	371	1747	788	1987	1873

PLATE PLACEMENT TOL. = 0.250 inches

PLATE ROTATION TOL. = 5.0 Deg.

JSI GRIP= 0.87 (G) (INPUT = 0.90)
JSI METAL= 0.35 (A) (INPUT = 1.00)

JOB NAME	TRUSS NAME	QUANTITY	PLY	JOB DESC.		DRWG NO.
343190	H07P		1	TRUSS DESC.	JT 45147	E22052711

Alpa Roof Truss, Maple

Version 8.530 S Feb 23 2022 MiTek Industries, Inc. Tue Jun 7 13:30:04 2022 Page 1
ID:MF8iiriaTok7DlbpT4B71Xys4PG-uRZqZRmoHs1Uab?E0aIKkHPbglTw FMQ02m5Glz8gVX

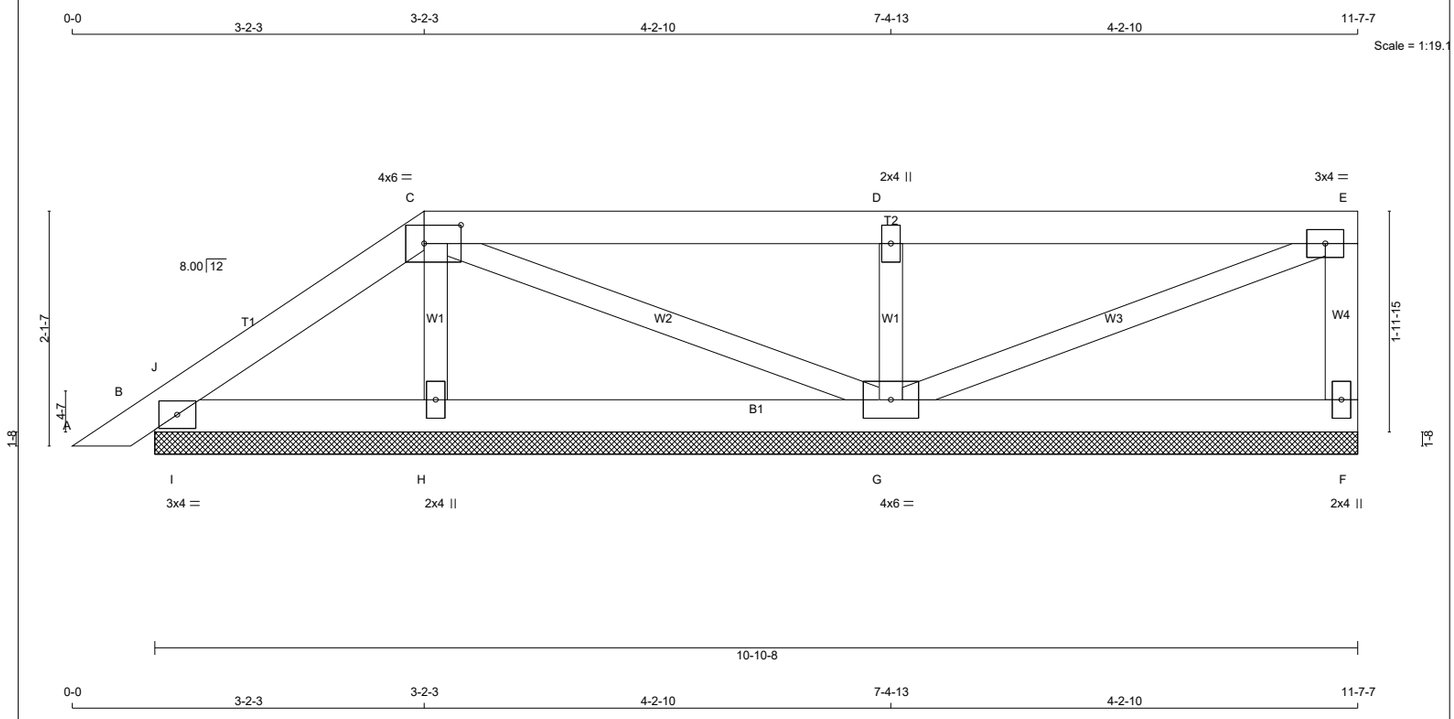

TOTAL WEIGHT = 37 lb
[M]

LUMBER
N. L. G. A. RULES

CHORDS	SIZE		LUMBER	DESCR.
A - C	2x4	DRY	No.2	SPF
C - E	2x4	DRY	No.2	SPF
F - E	2x4	DRY	No.2	SPF
B - F	2x4	DRY	No.2	SPF
ALL WEBS	2x3	DRY	No.2	SPF

DRY: SEASONED LUMBER.

PLATES (table is in inches)

JT	TYPE	PLATES	W	LEN	Y	X
B	TMB1-I	MT20	3.0	4.0		
C	TTWW-I	MT20	4.0	6.0	2.00	4.00
D	TMW+w	MT20	2.0	4.0		
E	TMVW-t	MT20	3.0	4.0		
F	BMV1+p	MT20	2.0	4.0		
G	BMWWW1-t	MT20	4.0	6.0		
H	BMW1+w	MT20	2.0	4.0		

LATERAL BRACE(S) SHOWN SHALL BE
2X4 SPF#2

DIMENSIONS, SUPPORTS AND LOADINGS SPECIFIED BY FABRICATOR TO BE VERIFIED BY BUILDING DESIGNER

BEARINGS

JT	FACTORED GROSS REACTION VERT	HORZ	MAXIMUM FACTORED GROSS REACTION DOWN	HORZ	UPLIFT	INPUT BRG IN-SX	REQRD BRG IN-SX
F	154	0	154	0	0	10-10-8	1-8
B	187	0	187	0	0	10-10-8	1-8
H	250	0	250	0	0	10-10-8	1-8
G	510	0	510	0	0	10-10-8	1-8

UNFACTORED REACTIONS

JT	1ST LCASE COMBINED	MAX./MIN. COMPONENT REACTIONS SNOW	LIVE	PERM.LIVE	WIND	DEAD	SOIL
F	110	66 / 0	0 / 0	0 / 0	0 / 0	44 / 0	0 / 0
B	131	91 / 0	0 / 0	0 / 0	0 / 0	40 / 0	0 / 0
H	180	100 / 0	0 / 0	0 / 0	0 / 0	80 / 0	0 / 0
G	363	226 / 0	0 / 0	0 / 0	0 / 0	137 / 0	0 / 0

BEARING MATERIAL TO BE SPF NO.2 OR BETTER AT JOINT(S) F, B, H, G

BRACING
TOP CHORD TO BE SHEATHED OR MAX. PURLIN SPACING = 6.25 FT.
MAX. UNBRACED BOTTOM CHORD LENGTH = 10.00 FT OR RIGID CEILING DIRECTLY APPLIED.

ALL PITCH BREAKS AND PERIMETER CORNER JOINTS MUST BE LATERALLY RESTRAINED.

LOADING
TOTAL LOAD CASES: (4)

CHORDS

MEMB. FR-TO	MAX. FORCE (LBS)	FACTORED VERT. LOAD (PLF) FROM	TO	LC1 CSI (LC)	MAX UNBRAC LENGTH
A- B	0 / 13	-78.0	-78.0	0.03 (1)	10.00
B- J	-30 / 0	-78.0	-78.0	0.01 (1)	6.25
J- C	-48 / 0	-78.0	-78.0	0.05 (1)	6.25
C- D	0 / 1	-78.0	-78.0	0.24 (1)	10.00
D- E	0 / 1	-78.0	-78.0	0.24 (1)	10.00
F- E	-123 / 0	0.0	0.0	0.01 (1)	7.81
B- I	0 / 38	-18.5	-18.5	0.06 (1)	10.00
I- H	0 / 38	-18.5	-18.5	0.06 (1)	10.00
H- G	0 / 28	-18.5	-18.5	0.08 (4)	10.00
G- F	0 / 0	-18.5	-18.5	0.08 (4)	10.00

WEBS

MEMB. FR-TO	MAX. FORCE (LBS)	MAX CSI (LC)
H- C	-165 / 0	0.02 (1)
C- G	-31 / 0	0.01 (1)
G- D	-411 / 0	0.06 (1)
G- E	-1 / 0	0.00 (1)
I- J	-123 / 0	0.00 (1)

DESIGN CRITERIA

SPECIFIED LOADS:

TOP CH.	LL	=	21.0	PSF
	DL	=	6.0	PSF
BOT CH.	LL	=	0.0	PSF
	DL	=	7.4	PSF
TOTAL LOAD		=	34.4	PSF

SPACING = 24.0 IN. C/C

LOADING IN FLAT SECTION BASED ON A SLOPE OF 2.00/12 MINIMUM

THIS TRUSS IS DESIGNED FOR RESIDENTIAL OR SMALL BUILDING REQUIREMENTS OF PART 9, NBCC 2015

THIS DESIGN COMPLIES WITH:
- PART 9 OF BCBC 2018 , ABC 2019
- PART 9 OF OBC 2012 (2019 AMENDMENT)
- CSA 086-14
- TPIC 2014

(55 % OF 23.0 P.S.F. G.S.L. PLUS 8.4 P.S.F. RAIN LOAD) EQUALS 21.0 P.S.F. SPECIFIED ROOF LIVE LOAD

CSI: TC=0.24/1.00 (C-D:1) , BC=0.08/1.00 (G-H:4) , WB=0.06/1.00 (D-G:1) , SSI=0.16/1.00 (D-E:1)

DOL LUMBER=1.00 NAIL=1.00 LS BEND=1.10 COMP=1.10 SHEAR=1.10 TENS= 1.10

COMPANION LIVE LOAD FACTOR = 1.00

TRUSS PLATE MANUFACTURER IS NOT RESPONSIBLE FOR QUALITY CONTROL IN THE TRUSS MANUFACTURING PLANT .

NAIL VALUES

PLATE	GRIP(DRY) (PSI) MAX	MIN	SHEAR (PLI) MAX	MIN	SECTION (PLI) MAX	MIN
MT20	650	371	1747	788	1987	1873

PLATE PLACEMENT TOL. = 0.250 inches

PLATE ROTATION TOL. = 5.0 Deg.

JSI GRIP= 0.20 (D) (INPUT = 0.90)
JSI METAL= 0.09 (D) (INPUT = 1.00)

JOB NAME	TRUSS NAME	QUANTITY	PLY	JOB DESC.	DRWG NO.
343190	H08P		1	TRUSS DESC. JT 45147	E22052712

Alpa Roof Truss, Maple

Version 8.530 S Feb 23 2022 MiTek Industries, Inc. Tue Jun 7 13:30:05 2022 Page 1
ID:MF8iiriaTok7DlbpT4B71Xys4PG-Me7DmnmR299LClZQZIpZGUyi18n6jibZFiVeoBz8qVW

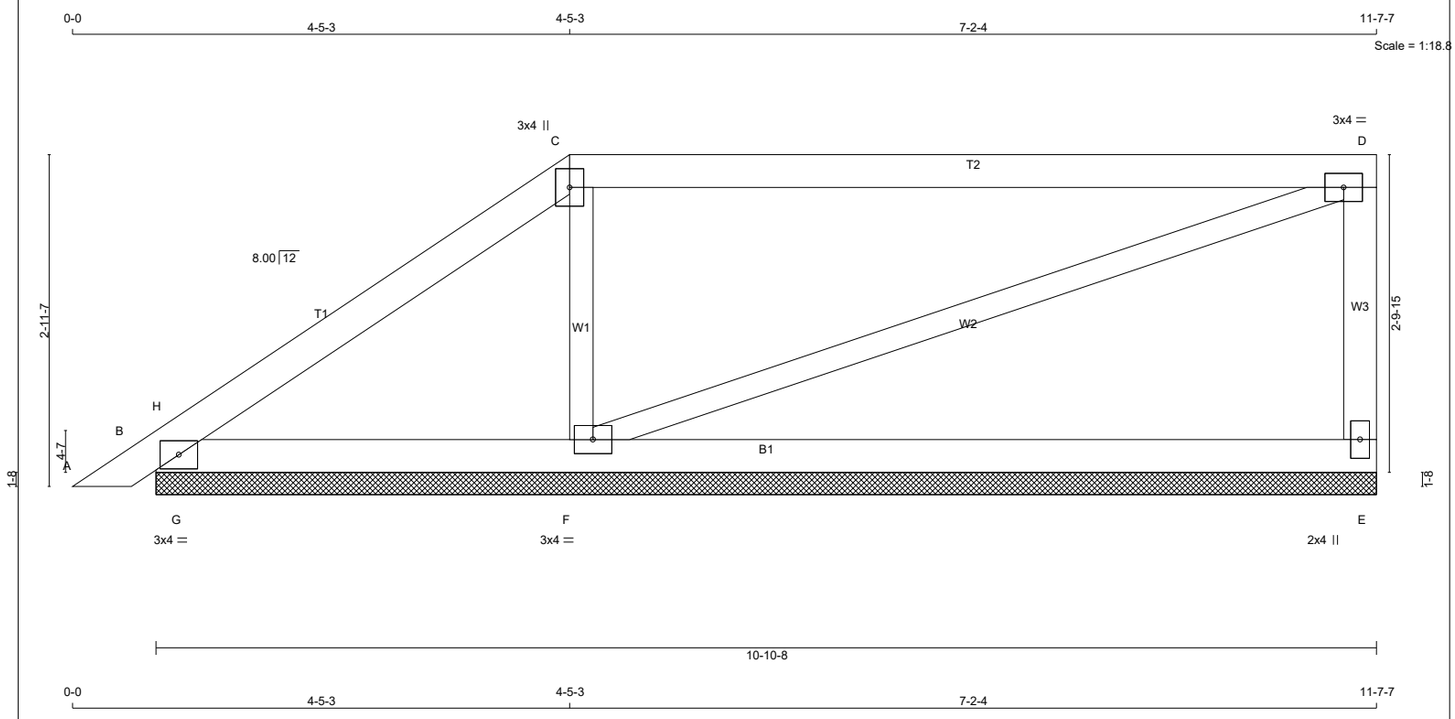

TOTAL WEIGHT = 37 lb
[M]

LUMBER
N. L. G. A. RULES

CHORDS	SIZE		LUMBER	DESCR.
A - C	2x4	DRY	No.2	SPF
C - D	2x4	DRY	2100F 1.8E	SPF
E - D	2x4	DRY	No.2	SPF
B - E	2x4	DRY	No.2	SPF
ALL WEBS	2x3	DRY	No.2	SPF

DRY: SEASONED LUMBER.

PLATES (table is in inches)

JT	TYPE	PLATES	W	LEN	Y	X
B	TMB1-l	MT20	3.0	4.0		
C	TTW+p	MT20	3.0	4.0		
D	TMVW-t	MT20	3.0	4.0		
E	BMV1+p	MT20	2.0	4.0		
F	BMWW1-t	MT20	3.0	4.0		

DIMENSIONS, SUPPORTS AND LOADINGS SPECIFIED BY FABRICATOR TO BE VERIFIED BY BUILDING DESIGNER

BEARINGS

JT	FACTORED GROSS REACTION VERT	HORZ	MAXIMUM FACTORED GROSS REACTION DOWN	HORZ	UPLIFT	INPUT BRG IN-SX	REQRD BRG IN-SX
E	344	0	344	0	0	10-10-8	1-8
B	238	0	238	0	0	10-10-8	1-8
F	519	0	519	0	0	10-10-8	1-8

UNFACTORED REACTIONS

JT	1ST LCASE COMBINED	MAX./MIN. COMPONENT REACTIONS SNOW	LIVE	PERM.LIVE	WIND	DEAD	SOIL
E	243	157 / 0	0 / 0	0 / 0	0 / 0	87 / 0	0 / 0
B	166	122 / 0	0 / 0	0 / 0	0 / 0	43 / 0	0 / 0
F	374	205 / 0	0 / 0	0 / 0	0 / 0	169 / 0	0 / 0

BEARING MATERIAL TO BE SPF NO.2 OR BETTER AT JOINT(S) E, B, F

BRACING
TOP CHORD TO BE SHEATHED OR MAX. PURLIN SPACING = 6.25 FT.
MAX. UNBRACED BOTTOM CHORD LENGTH = 10.00 FT OR RIGID CEILING DIRECTLY APPLIED.

ALL PITCH BREAKS AND PERIMETER CORNER JOINTS MUST BE LATERALLY RESTRAINED.

LOADING
TOTAL LOAD CASES: (4)

CHORDS

MEMB. FR-TO	MAX. FACTORED FORCE (LBS)	FACTORED VERT. LOAD (PLF) FROM	TO	LC1 MAX CSI (LC)	MAX. UNBRAC LENGTH
A- B	0 / 13	-78.0	-78.0	0.03 (1)	10.00
B- H	0 / 33	-78.0	-78.0	0.07 (1)	10.00
H- C	-68 / 0	-78.0	-78.0	0.12 (1)	6.25
C- D	-35 / 0	-78.0	-78.0	0.45 (1)	6.25
E- D	-293 / 0	0.0	0.0	0.04 (1)	7.81
B- G	0 / 50	-18.5	-18.5	0.13 (1)	10.00
G- F	0 / 50	-18.5	-18.5	0.22 (4)	10.00
F- E	0 / 0	-18.5	-18.5	0.21 (4)	10.00

WEBS

MEMB. FR-TO	MAX. FACTORED FORCE (LBS)	MAX CSI (LC)
F- C	-365 / 0	0.06 (1)
F- D	0 / 37	0.01 (1)
G- H	-303 / 0	0.00 (1)

DESIGN CRITERIA

SPECIFIED LOADS:

TOP CH.	LL	=	21.0	PSF
	DL	=	6.0	PSF
BOT CH.	LL	=	0.0	PSF
	DL	=	7.4	PSF
TOTAL LOAD		=	34.4	PSF

SPACING = 24.0 IN. C/C

LOADING IN FLAT SECTION BASED ON A SLOPE OF 2.00/12 MINIMUM

THIS TRUSS IS DESIGNED FOR RESIDENTIAL OR SMALL BUILDING REQUIREMENTS OF PART 9, NBCC 2015

THIS DESIGN COMPLIES WITH:
- PART 9 OF BCBC 2018 , ABC 2019
- PART 9 OF OBC 2012 (2019 AMENDMENT)
- CSA 086-14
- TPIC 2014

(55 % OF 23.0 P.S.F. G.S.L. PLUS 8.4 P.S.F. RAIN LOAD) EQUALS 21.0 P.S.F. SPECIFIED ROOF LIVE LOAD

CSI: TC=0.45/1.00 (C-D:1) , BC=0.22/1.00 (F-G:4) , WB=0.06/1.00 (C-F:1) , SSI=0.22/1.00 (B-G:1)

DOL LUMBER=1.00 NAIL=1.00 LS BEND=1.10 COMP=1.10 SHEAR=1.10 TENS= 1.10

COMPANION LIVE LOAD FACTOR = 1.00

TRUSS PLATE MANUFACTURER IS NOT RESPONSIBLE FOR QUALITY CONTROL IN THE TRUSS MANUFACTURING PLANT .

NAIL VALUES

PLATE	GRIP(DRY) (PSI) MAX	MIN	SHEAR (PLI) MAX	MIN	SECTION (PLI) MAX	MIN
MT20	650	371	1747	788	1987	1873

PLATE PLACEMENT TOL. = 0.250 inches

PLATE ROTATION TOL. = 5.0 Deg.

JSI GRIP= 0.37 (C) (INPUT = 0.90)
JSI METAL= 0.06 (E) (INPUT = 1.00)

LATERAL BRACE(S) SHOWN SHALL BE 2X4 SPF#2

LICENSED PROFESSIONAL ENGINEER
V. WIDYA
100225448
06/07/2022
PROVINCE OF ONTARIO

JOB NAME	TRUSS NAME	QUANTITY	PLY	JOB DESC.	DRWG NO.
343190	H09P		1	TRUSS DESC. JT 45147	E22052713

Alpa Roof Truss, Maple

Version 8.530 S Feb 23 2022 MiTek Industries, Inc. Tue Jun 7 13:30:06 2022 Page 1
ID:MF8iiriaTok7DlbpT4B71Xys4PG-qqhb 7n3pTHCpu8c7?KopiVtVY6dS8diTMFCKdz8gVV

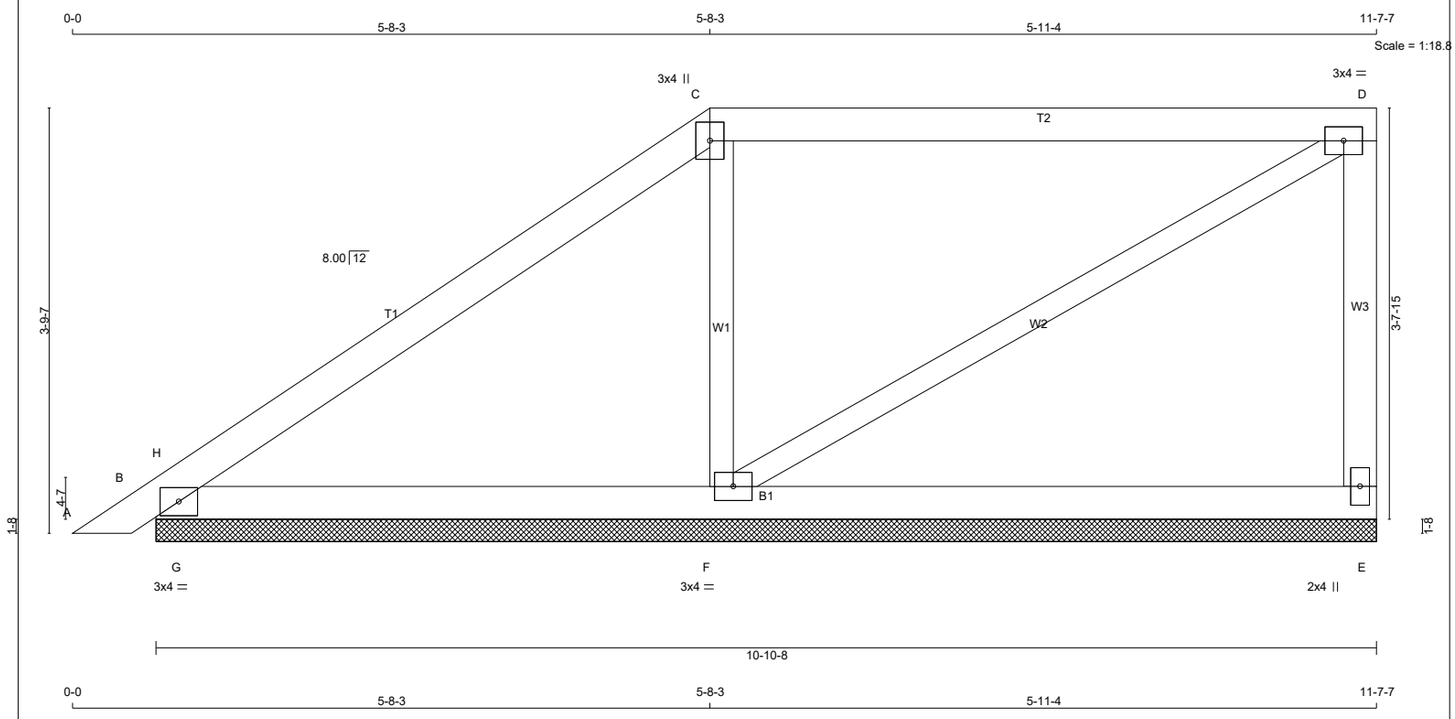

TOTAL WEIGHT = 38 lb

LUMBER
N. L. G. A. RULES

CHORDS	SIZE		LUMBER	DESCR.
A - C	2x4	DRY	No.2	SPF
C - D	2x4	DRY	No.2	SPF
E - D	2x4	DRY	No.2	SPF
B - E	2x4	DRY	No.2	SPF
ALL WEBS	2x3	DRY	No.2	SPF

DRY: SEASONED LUMBER.

PLATES (table is in inches)

JT	TYPE	PLATES	W	LEN	Y	X
B	TMB1-l	MT20	3.0	4.0		
C	TTW+p	MT20	3.0	4.0		
D	TMVW-t	MT20	3.0	4.0		
E	BMV1+p	MT20	2.0	4.0		
F	BMWW1-t	MT20	3.0	4.0		

LATERAL BRACE(S) SHOWN SHALL BE 2X4 SPF#2

DIMENSIONS, SUPPORTS AND LOADINGS SPECIFIED BY FABRICATOR TO BE VERIFIED BY BUILDING DESIGNER

BEARINGS

JT	FACTORED GROSS REACTION VERT	HORZ	MAXIMUM FACTORED GROSS REACTION DOWN	HORZ	UPLIFT	INPUT BRG IN-SX	REQRD BRG IN-SX
E	303	0	303	0	0	10-10-8	1-8
B	320	0	320	0	0	10-10-8	1-8
F	478	0	478	0	0	10-10-8	1-8

UNFACTORED REACTIONS

JT	1ST LCASE COMBINED	MAX./MIN. COMPONENT REACTIONS SNOW	LIVE	PERM.LIVE	WIND	DEAD	SOIL
E	214	139 / 0	0 / 0	0 / 0	0 / 0	76 / 0	0 / 0
B	225	152 / 0	0 / 0	0 / 0	0 / 0	73 / 0	0 / 0
F	344	193 / 0	0 / 0	0 / 0	0 / 0	151 / 0	0 / 0

BEARING MATERIAL TO BE SPF NO.2 OR BETTER AT JOINT(S) E, B, F

BRACING
TOP CHORD TO BE SHEATHED OR MAX. PURLIN SPACING = 6.25 FT.
MAX. UNBRACED BOTTOM CHORD LENGTH = 10.00 FT OR RIGID CEILING DIRECTLY APPLIED.

ALL PITCH BREAKS AND PERIMETER CORNER JOINTS MUST BE LATERALLY RESTRAINED.

LOADING
TOTAL LOAD CASES: (4)

CHORDS

MEMB. FR-TO	MAX. FACTORED FORCE (LBS)	FACTORED VERT. LOAD LC1 (PLF) FROM	TO	MAX CSI (LC)	MAX. UNBRAC LENGTH
A- B	0 / 13	-78.0	-78.0	0.03 (1)	10.00
B- H	-13 / 71	-78.0	-78.0	0.12 (1)	6.25
H- C	-95 / 0	-78.0	-78.0	0.24 (1)	6.25
C- D	-60 / 0	-78.0	-78.0	0.47 (1)	6.25
E- D	-266 / 0	0.0	0.0	0.06 (1)	7.81
B- G	0 / 71	-18.5	-18.5	0.20 (1)	10.00
G- F	0 / 71	-18.5	-18.5	0.20 (1)	10.00
F- E	0 / 0	-18.5	-18.5	0.17 (4)	10.00

WEBS

MEMB. FR-TO	MAX. FACTORED FORCE (LBS)	MAX CSI (LC)
F- C	-348 / 0	0.08 (1)
F- D	0 / 70	0.02 (1)
G- H	-453 / 0	0.00 (1)

DESIGN CRITERIA

SPECIFIED LOADS:

TOP CH.	LL	=	21.0	PSF
	DL	=	6.0	PSF
BOT CH.	LL	=	0.0	PSF
	DL	=	7.4	PSF
TOTAL LOAD		=	34.4	PSF

SPACING = 24.0 IN. C/C

LOADING IN FLAT SECTION BASED ON A SLOPE OF 2.00/12 MINIMUM

THIS TRUSS IS DESIGNED FOR RESIDENTIAL OR SMALL BUILDING REQUIREMENTS OF PART 9, NBCC 2015

THIS DESIGN COMPLIES WITH:
- PART 9 OF BCBC 2018 , ABC 2019
- PART 9 OF OBC 2012 (2019 AMENDMENT)
- CSA 086-14
- TPIC 2014

(55 % OF 23.0 P.S.F. G.S.L. PLUS 8.4 P.S.F. RAIN LOAD) EQUALS 21.0 P.S.F. SPECIFIED ROOF LIVE LOAD

CSI: TC=0.47/1.00 (C-D:1) , BC=0.20/1.00 (B-G:1) , WB=0.08/1.00 (C-F:1) , SSI=0.35/1.00 (B-G:1)

DOL LUMBER=1.00 NAIL=1.00 LS BEND=1.10 COMP=1.10 SHEAR=1.10 TENS= 1.10

COMPANION LIVE LOAD FACTOR = 1.00

TRUSS PLATE MANUFACTURER IS NOT RESPONSIBLE FOR QUALITY CONTROL IN THE TRUSS MANUFACTURING PLANT .

NAIL VALUES

PLATE	GRIP(DRY) (PSI) MAX	MIN	SHEAR (PLI) MAX	MIN	SECTION (PLI) MAX	MIN
MT20	650	371	1747	788	1987	1873

PLATE PLACEMENT TOL. = 0.250 inches

PLATE ROTATION TOL. = 5.0 Deg.

JSI GRIP= 0.33 (F) (INPUT = 0.90)
JSI METAL= 0.06 (B) (INPUT = 1.00)

JOB NAME	TRUSS NAME	QUANTITY	PLY	JOB DESC.	DRWG NO.
343190	H10P		1	TRUSS DESC. JT 45147	E22052714

Alpa Roof Truss, Maple

Version 8.530 S Feb 23 2022 MiTek Industries, Inc. Tue Jun 7 13:30:07 2022 Page 1
ID:MF8iiriaTok7DlbpT4B71Xys4PG-I0FzBTohanP3R2jphjr1Lv14gyRJBbXsi0_lt4z8gVU

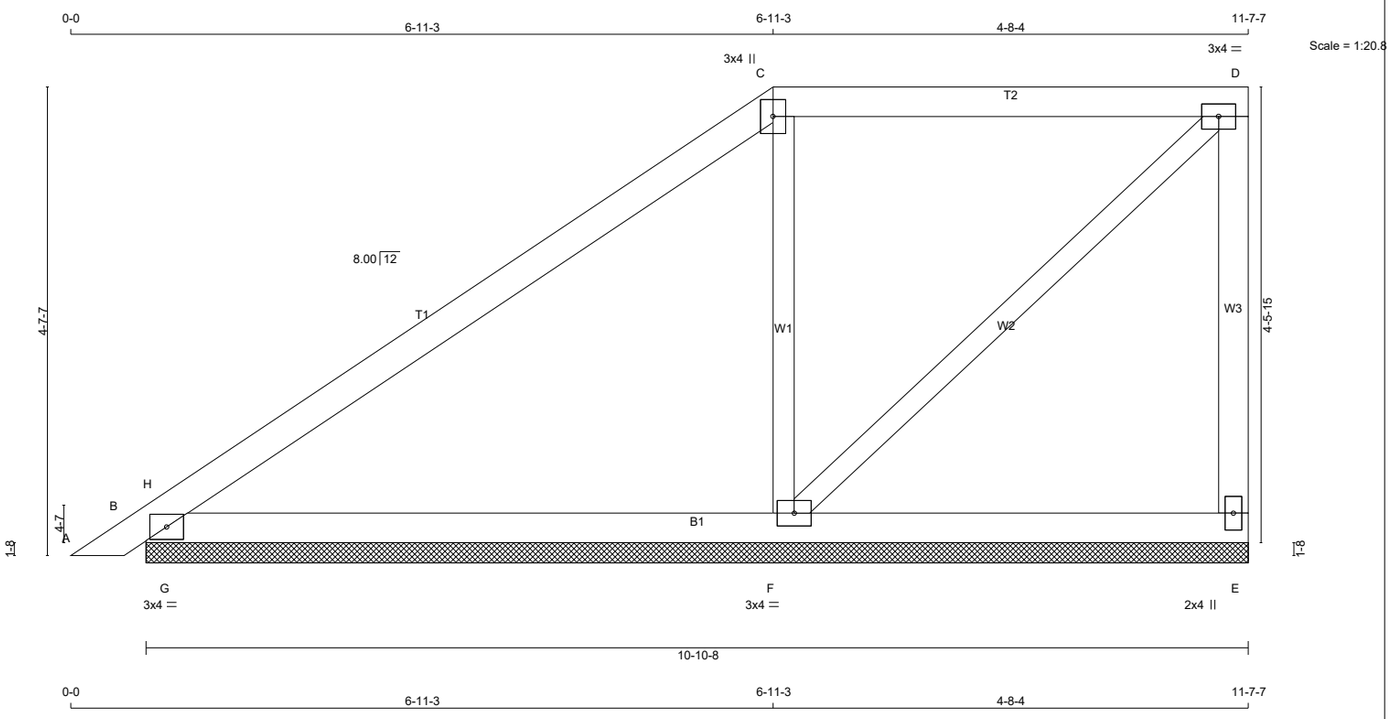

TOTAL WEIGHT = 40 lb

LUMBER
N. L. G. A. RULES

CHORDS	SIZE		LUMBER	DESCR.
A - C	2x4	DRY	No.2	SPF
C - D	2x4	DRY	No.2	SPF
E - D	2x4	DRY	No.2	SPF
B - E	2x4	DRY	No.2	SPF
ALL WEBS	2x3	DRY	No.2	SPF

DRY: SEASONED LUMBER.

PLATES (table is in inches)

JT	TYPE	PLATES	W	LEN	Y	X
B	TMB1-l	MT20	3.0	4.0		
C	TTW+p	MT20	3.0	4.0		
D	TMVW-t	MT20	3.0	4.0		
E	BMV1+p	MT20	2.0	4.0		
F	BMWW1-t	MT20	3.0	4.0		

LATERAL BRACE(S) SHOWN SHALL BE 2X4 SPF#2

DIMENSIONS, SUPPORTS AND LOADINGS SPECIFIED BY FABRICATOR TO BE VERIFIED BY BUILDING DESIGNER

BEARINGS

JT	FACTORED GROSS REACTION VERT	HORZ	MAXIMUM FACTORED GROSS REACTION DOWN	HORZ	UPLIFT	INPUT BRG IN-SX	REQRD BRG IN-SX
E	274	0	274	0	0	10-10-8	1-8
B	394	0	394	0	0	10-10-8	1-8
F	432	0	432	0	0	10-10-8	1-8

UNFACTORED REACTIONS

JT	1ST LCASE COMBINED	MAX./MIN. COMPONENT REACTIONS SNOW	LIVE	PERM.LIVE	WIND	DEAD	SOIL
E	194	127 / 0	0 / 0	0 / 0	0 / 0	67 / 0	0 / 0
B	279	183 / 0	0 / 0	0 / 0	0 / 0	96 / 0	0 / 0
F	311	174 / 0	0 / 0	0 / 0	0 / 0	136 / 0	0 / 0

BEARING MATERIAL TO BE SPF NO.2 OR BETTER AT JOINT(S) E, B, F

BRACING
TOP CHORD TO BE SHEATHED OR MAX. PURLIN SPACING = 6.25 FT.
MAX. UNBRACED BOTTOM CHORD LENGTH = 10.00 FT OR RIGID CEILING DIRECTLY APPLIED.

ALL PITCH BREAKS AND PERIMETER CORNER JOINTS MUST BE LATERALLY RESTRAINED.

LOADING
TOTAL LOAD CASES: (4)

CHORDS

MEMB. FR-TO	MAX. FACTORED FORCE (LBS)	FACTORED VERT. LOAD LC1 (PLF) FROM	TO	MAX CSI (LC)	MAX. UNBRAC LENGTH
A- B	0 / 13	-78.0	-78.0	0.03 (1)	10.00
B- H	-32 / 152	-78.0	-78.0	0.20 (1)	6.25
H- C	-125 / 0	-78.0	-78.0	0.38 (1)	6.25
C- D	-86 / 0	-78.0	-78.0	0.29 (1)	6.25
E- D	-261 / 0	0.0	0.0	0.08 (1)	7.81
B- G	0 / 94	-18.5	-18.5	0.30 (1)	10.00
G- F	0 / 94	-18.5	-18.5	0.30 (1)	10.00
F- E	0 / 0	-18.5	-18.5	0.18 (4)	10.00

WEBS

MEMB. FR-TO	MAX. FACTORED FORCE (LBS)	MAX CSI (LC)
F- C	-327 / 0	0.10 (1)
F- D	0 / 116	0.03 (1)
G- H	-677 / 0	0.00 (1)

DESIGN CRITERIA

SPECIFIED LOADS:

TOP CH.	LL	=	21.0	PSF
	DL	=	6.0	PSF
BOT CH.	LL	=	0.0	PSF
	DL	=	7.4	PSF
TOTAL LOAD		=	34.4	PSF

SPACING = 24.0 IN. C/C

LOADING IN FLAT SECTION BASED ON A SLOPE OF 2.00/12 MINIMUM

THIS TRUSS IS DESIGNED FOR RESIDENTIAL OR SMALL BUILDING REQUIREMENTS OF PART 9, NBCC 2015

THIS DESIGN COMPLIES WITH:
- PART 9 OF BCBC 2018 , ABC 2019
- PART 9 OF OBC 2012 (2019 AMENDMENT)
- CSA 086-14
- TPIC 2014

(55 % OF 23.0 P.S.F. G.S.L. PLUS 8.4 P.S.F. RAIN LOAD) EQUALS 21.0 P.S.F. SPECIFIED ROOF LIVE LOAD

CSI: TC=0.38/1.00 (C-H:1) , BC=0.30/1.00 (B-G:1) , WB=0.10/1.00 (C-F:1) , SSI=0.53/1.00 (B-G:1)

DOL LUMBER=1.00 NAIL=1.00 LS BEND=1.10 COMP=1.10 SHEAR=1.10 TENS= 1.10

COMPANION LIVE LOAD FACTOR = 1.00

TRUSS PLATE MANUFACTURER IS NOT RESPONSIBLE FOR QUALITY CONTROL IN THE TRUSS MANUFACTURING PLANT .

NAIL VALUES

PLATE	GRIP(DRY) (PSI) MAX	MIN	SHEAR (PLI) MAX	MIN	SECTION (PLI) MAX	MIN
MT20	650	371	1747	788	1987	1873

PLATE PLACEMENT TOL. = 0.250 inches

PLATE ROTATION TOL. = 5.0 Deg.

JSI GRIP= 0.32 (B) (INPUT = 0.90)
JSI METAL= 0.07 (B) (INPUT = 1.00)

JOB NAME	TRUSS NAME	QUANTITY	PLY	JOB DESC.		DRWG NO.
343190	H11P		1	TRUSS DESC.	JT 45147	E22052715

Alpa Roof Truss, Maple

Version 8.530 S Feb 23 2022 MiTek Industries, Inc. Tue Jun 7 13:30:09 2022 Page 1

ID:MF8iiriaTok7DlbpT4B71Xys4PG-EPMjc8px6OfmgMtBo8tVRK7MSm5rfUS99KTsxyz8gVS

Scale: 1/2"=1'

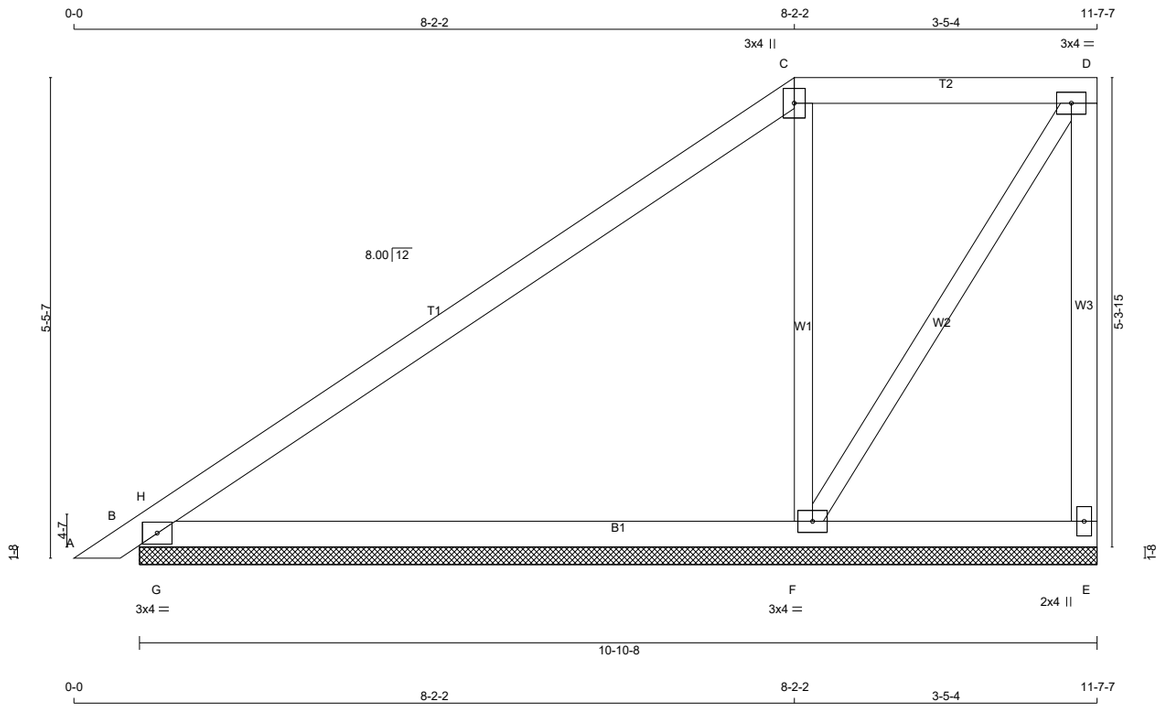

TOTAL WEIGHT = 41 lb

[M]

LUMBER

N. L. G. A. RULES

CHORDS	SIZE		LUMBER	DESCR.
A - C	2x4	DRY	No.2	SPF
C - D	2x4	DRY	No.2	SPF
E - D	2x4	DRY	No.2	SPF
B - E	2x4	DRY	No.2	SPF
ALL WEBS	2x3	DRY	No.2	SPF

DRY: SEASONED LUMBER.

PLATES (table is in inches)

JT	TYPE	PLATES	W	LEN	Y	X
B	TMB1-l	MT20	3.0	4.0		
C	TTW+p	MT20	3.0	4.0		
D	TMVW-t	MT20	3.0	4.0		
E	BMV1+p	MT20	2.0	4.0		
F	BMWW1-t	MT20	3.0	4.0		

DIMENSIONS, SUPPORTS AND LOADINGS SPECIFIED BY FABRICATOR TO BE VERIFIED BY BUILDING DESIGNER

BEARINGS

JT	FACTORED GROSS REACTION VERT	HORZ	MAXIMUM FACTORED GROSS REACTION DOWN	HORZ	UPLIFT	INPUT BRG IN-SX	REQRD BRG IN-SX
E	240	0	240	0	0	10-10-8	1-8
B	451	0	451	0	0	10-10-8	1-8
F	410	0	410	0	0	10-10-8	1-8

UNFACTORED REACTIONS

JT	1ST LCASE COMBINED	MAX./MIN. COMPONENT REACTIONS SNOW	LIVE	PERM.LIVE	WIND	DEAD	SOIL
E	169	116 / 0	0 / 0	0 / 0	0 / 0	53 / 0	0 / 0
B	319	206 / 0	0 / 0	0 / 0	0 / 0	113 / 0	0 / 0
F	295	162 / 0	0 / 0	0 / 0	0 / 0	133 / 0	0 / 0

BEARING MATERIAL TO BE SPF NO.2 OR BETTER AT JOINT(S) E, B, F

BRACING

TOP CHORD TO BE SHEATHED OR MAX. PURLIN SPACING = 6.25 FT.
MAX. UNBRACED BOTTOM CHORD LENGTH = 10.00 FT OR RIGID CEILING DIRECTLY APPLIED.

ALL PITCH BREAKS AND PERIMETER CORNER JOINTS MUST BE LATERALLY RESTRAINED.

LOADING

TOTAL LOAD CASES: (4)

CHORDS

MEMB. FR-TO	MAX. FACTORED FORCE (LBS)	FACTORED VERT. LOAD (PLF) FROM	TO	LC1 MAX CSI (LC)	MAX. UNBRAC LENGTH
A- B	0 / 13	-78.0	-78.0	0.03 (1)	10.00
B- H	-29 / 304	-78.0	-78.0	0.33 (1)	6.25
H- C	-133 / 0	-78.0	-78.0	0.55 (1)	6.25
C- D	-90 / 0	-78.0	-78.0	0.16 (1)	6.25
E- D	-270 / 0	0.0	0.0	0.13 (1)	7.81
B- G	0 / 97	-18.5	-18.5	0.42 (1)	10.00
G- F	0 / 97	-18.5	-18.5	0.42 (1)	10.00
F- E	0 / 0	-18.5	-18.5	0.27 (1)	10.00

WEBS

MEMB. FR-TO	MAX. FACTORED FORCE (LBS)	MAX CSI (LC)
F- C	-319 / 0	0.13 (1)
F- D	0 / 164	0.04 (1)
G- H	-976 / 0	0.00 (1)

DESIGN CRITERIA

SPECIFIED LOADS:

TOP CH.	LL	=	21.0	PSF
	DL	=	6.0	PSF
BOT CH.	LL	=	0.0	PSF
	DL	=	7.4	PSF
TOTAL LOAD		=	34.4	PSF

SPACING = 24.0 IN. C/C

LOADING IN FLAT SECTION BASED ON A SLOPE OF 2.00/12 MINIMUM

THIS TRUSS IS DESIGNED FOR RESIDENTIAL OR SMALL BUILDING REQUIREMENTS OF PART 9, NBCC 2015

THIS DESIGN COMPLIES WITH:
- PART 9 OF BCBC 2018 , ABC 2019
- PART 9 OF OBC 2012 (2019 AMENDMENT)
- CSA 086-14
- TPIC 2014

(55 % OF 23.0 P.S.F. G.S.L. PLUS 8.4 P.S.F. RAIN LOAD) EQUALS 21.0 P.S.F. SPECIFIED ROOF LIVE LOAD

CSI: TC=0.55/1.00 (C-H:1) , BC=0.42/1.00 (B-G:1) , WB=0.13/1.00 (C-F:1) , SSI=0.76/1.00 (B-G:1)

DOL LUMBER=1.00 NAIL=1.00 LS BEND=1.10 COMP=1.10 SHEAR=1.10 TENS= 1.10

COMPANION LIVE LOAD FACTOR = 1.00

TRUSS PLATE MANUFACTURER IS NOT RESPONSIBLE FOR QUALITY CONTROL IN THE TRUSS MANUFACTURING PLANT .

NAIL VALUES

PLATE	GRIP(DRY) (PSI) MAX	MIN	SHEAR (PLI) MAX	MIN	SECTION (PLI) MAX	MIN
MT20	650	371	1747	788	1987	1873

PLATE PLACEMENT TOL. = 0.250 inches

PLATE ROTATION TOL. = 5.0 Deg.

JSI GRIP= 0.37 (B) (INPUT = 0.90)
JSI METAL= 0.08 (C) (INPUT = 1.00)

LATERAL BRACE(S) SHOWN SHALL BE 2X4 SPF#2

JOB NAME	TRUSS NAME	QUANTITY	PLY	JOB DESC.	DRWG NO.
343190	H12P		1	TRUSS DESC. JT 45147	E22052716

Alpa Roof Truss, Maple

Version 8.530 S Feb 23 2022 MiTek Industries, Inc. Tue Jun 7 13:30:10 2022 Page 1
ID:MF8iiriaTok7DlbpT4B71Xys4PG-jbw6pUqZtindIWSOMrPkzYfcE9W5OypIO DPTPz8gVR

Scale = 1:27.8

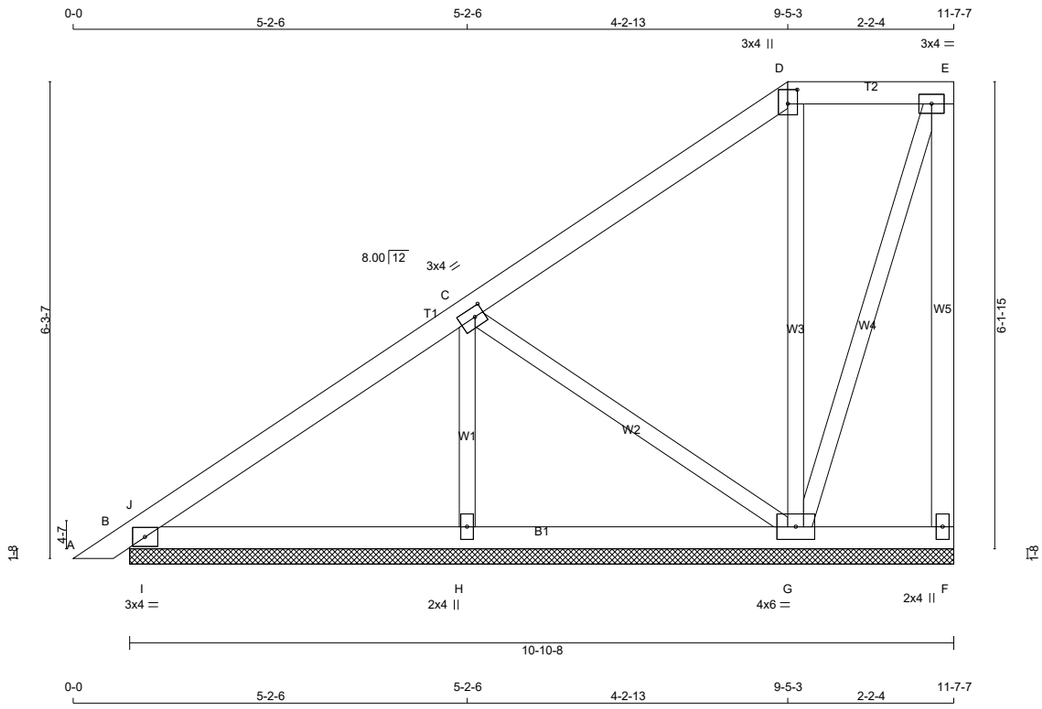

TOTAL WEIGHT = 50 lb

LUMBER
N. L. G. A. RULES

CHORDS	SIZE		LUMBER	DESCR.
A - D	2x4	DRY	No.2	SPF
D - E	2x4	DRY	No.2	SPF
F - E	2x4	DRY	No.2	SPF
B - F	2x4	DRY	No.2	SPF
ALL WEBS	2x3	DRY	No.2	SPF

DRY: SEASONED LUMBER.

PLATES (table is in inches)

JT	TYPE	PLATES	W	LEN	Y	X
B	TMB1-l	MT20	3.0	4.0		
C	TMWW-t	MT20	3.0	4.0	1.50	1.50
D	TTW+p	MT20	3.0	4.0	2.25	1.50
E	TMVW-t	MT20	3.0	4.0		
F	BMV1+p	MT20	2.0	4.0		
G	BMWWW1-t	MT20	4.0	6.0		
H	BMW1+w	MT20	2.0	4.0		

DIMENSIONS, SUPPORTS AND LOADINGS SPECIFIED BY FABRICATOR TO BE VERIFIED BY BUILDING DESIGNER

BEARINGS

JT	FACTORED GROSS REACTION VERT	HORZ	MAXIMUM FACTORED GROSS REACTION DOWN	HORZ	UPLIFT	INPUT BRG IN-SX	REQRD BRG IN-SX
F	76	0	76	0	0	10-10-8	1-8
B	275	0	275	0	0	10-10-8	1-8
H	394	0	394	0	0	10-10-8	1-8
G	354	0	354	0	0	10-10-8	1-8

UNFACTORED REACTIONS

JT	1ST LCASE COMBINED	MAX./MIN. COMPONENT REACTIONS SNOW	LIVE	PERM.LIVE	WIND	DEAD	SOIL
F	54	35 / 0	0 / 0	0 / 0	0 / 0	18 / 0	0 / 0
B	194	129 / 0	0 / 0	0 / 0	0 / 0	65 / 0	0 / 0
H	283	165 / 0	0 / 0	0 / 0	0 / 0	118 / 0	0 / 0
G	253	155 / 0	0 / 0	0 / 0	0 / 0	98 / 0	0 / 0

BEARING MATERIAL TO BE SPF NO.2 OR BETTER AT JOINT(S) F, B, H, G

BRACING
TOP CHORD TO BE SHEATHED OR MAX. PURLIN SPACING = 6.25 FT.
MAX. UNBRACED BOTTOM CHORD LENGTH = 10.00 FT OR RIGID CEILING DIRECTLY APPLIED.

ALL PITCH BREAKS AND PERIMETER CORNER JOINTS MUST BE LATERALLY RESTRAINED.

LOADING
TOTAL LOAD CASES: (4)

CHORDS

MEMB. FR-TO	MAX. FORCE (LBS)	FACTORED VERT. LOAD (PLF) FROM	TO	LC1 CSI (LC)	MAX UNBRAC LENGTH
A- B	0 / 13	-78.0	-78.0	0.03 (1)	10.00
B- J	-74 / 0	-78.0	-78.0	0.03 (1)	6.25
J- C	-85 / 0	-78.0	-78.0	0.23 (1)	6.25
C- D	-18 / 0	-78.0	-78.0	0.23 (1)	6.25
D- E	0 / 8	-78.0	-78.0	0.06 (1)	10.00
F- E	-64 / 0	0.0	0.0	0.05 (1)	7.81
B- I	0 / 87	-18.5	-18.5	0.10 (1)	10.00
I- H	0 / 87	-18.5	-18.5	0.10 (1)	10.00
H- G	0 / 87	-18.5	-18.5	0.10 (4)	10.00
G- F	0 / 0	-18.5	-18.5	0.05 (4)	10.00

WEBS

MEMB. FR-TO	MAX. FORCE (LBS)	MAX CSI (LC)
H- C	-279 / 0	0.05 (1)
C- G	-111 / 0	0.05 (1)
G- D	-213 / 0	0.13 (1)
G- E	-23 / 0	0.02 (1)
I- J	-184 / 7	0.00 (1)

DESIGN CRITERIA

SPECIFIED LOADS:

TOP CH.	LL	=	21.0	PSF
	DL	=	6.0	PSF
BOT CH.	LL	=	0.0	PSF
	DL	=	7.4	PSF
TOTAL LOAD		=	34.4	PSF

SPACING = 24.0 IN. C/C

LOADING IN FLAT SECTION BASED ON A SLOPE OF 2.00/12 MINIMUM

THIS TRUSS IS DESIGNED FOR RESIDENTIAL OR SMALL BUILDING REQUIREMENTS OF PART 9, NBCC 2015

THIS DESIGN COMPLIES WITH:
- PART 9 OF BCBC 2018 , ABC 2019
- PART 9 OF OBC 2012 (2019 AMENDMENT)
- CSA 086-14
- TPIC 2014

(55 % OF 23.0 P.S.F. G.S.L. PLUS 8.4 P.S.F. RAIN LOAD) EQUALS 21.0 P.S.F. SPECIFIED ROOF LIVE LOAD

CSI: TC=0.23/1.00 (C-J:1) , BC=0.10/1.00 (H-I:1) , WB=0.13/1.00 (D-G:1) , SSI=0.16/1.00 (B-I:1)

DOL LUMBER=1.00 NAIL=1.00 LS BEND=1.10 COMP=1.10 SHEAR=1.10 TENS= 1.10

COMPANION LIVE LOAD FACTOR = 1.00

TRUSS PLATE MANUFACTURER IS NOT RESPONSIBLE FOR QUALITY CONTROL IN THE TRUSS MANUFACTURING PLANT .

NAIL VALUES

PLATE	GRIP(DRY) (PSI) MAX	MIN	SHEAR (PLI) MAX	MIN	SECTION (PLI) MAX	MIN
MT20	650	371	1747	788	1987	1873

PLATE PLACEMENT TOL. = 0.250 inches

PLATE ROTATION TOL. = 5.0 Deg.

JSI GRIP= 0.33 (C) (INPUT = 0.90)
JSI METAL= 0.06 (C) (INPUT = 1.00)

LATERAL BRACE(S) SHOWN SHALL BE 2X4 SPF#2

JOB NAME	TRUSS NAME	QUANTITY	PLY	JOB DESC.	DRWG NO.
343190	H13T		1	TRUSS DESC. JT 45147	E22052717

Alpa Roof Truss, Maple

Version 8.530 S Feb 23 2022 MiTek Industries, Inc. Tue Jun 7 13:30:12 2022 Page 1
ID:MF8iiriaTok7DlbpT4B71Xys4PG-f 2sEAsqOJ1LXpcmUGRC2zlokz5zslTbsIiWYHz8gVP

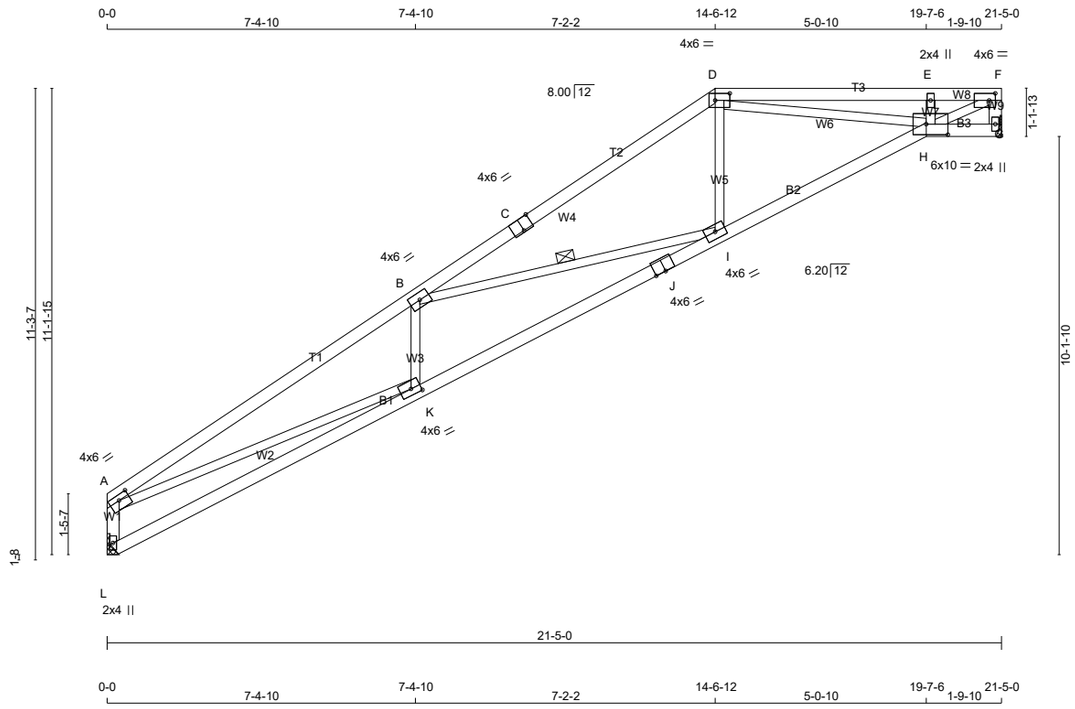

TOTAL WEIGHT = 79 lb

LUMBER
N. L. G. A. RULES

CHORDS	SIZE		LUMBER	DESCR.
A - C	2x4	DRY	No.2	SPF
C - D	2x4	DRY	No.2	SPF
D - F	2x4	DRY	No.2	SPF
G - F	2x4	DRY	No.2	SPF
L - A	2x4	DRY	No.2	SPF
L - J	2x4	DRY	No.2	SPF
J - H	2x4	DRY	No.2	SPF
H - G	2x4	DRY	No.2	SPF
ALL WEBS EXCEPT	2x3	DRY	No.2	SPF

DRY: SEASONED LUMBER.

PLATES (table is in inches)

JT	TYPE	PLATES	W	LEN	Y	X
A	TMVW-t	MT20	4.0	6.0	1.50	3.00
B	TMWW-t	MT20	4.0	6.0		
C	TS-t	MT20	4.0	6.0	Edge	3.00
D	TTWW-l	MT20	4.0	6.0	2.00	4.25
E	TMW+w	MT20	2.0	4.0		
F	TMVW-t	MT20	4.0	6.0	2.00	1.75
G	BMV1+p	MT20	2.0	4.0		
H	BBWWW-p	MT20	6.0	10.0	3.00	6.25
I	BMWW-t	MT20	4.0	6.0		
J	BS-t	MT20	4.0	6.0		
K	BMWW-t	MT20	4.0	6.0	1.75	2.75
L	BMV1+p	MT20	2.0	4.0		

Edge - INDICATES REFERENCE CORNER OF PLATE TOUCHES EDGE OF CHORD.

LATERAL BRACE(S) SHOWN SHALL BE 2X4 SPF#2

DIMENSIONS, SUPPORTS AND LOADINGS SPECIFIED BY FABRICATOR TO BE VERIFIED BY BUILDING DESIGNER

BEARINGS

JT	FACTORED GROSS REACTION VERT	HORZ	MAXIMUM FACTORED GROSS REACTION DOWN	HORZ	UPLIFT	INPUT BRG	REQRD BRG
G	1033	0	1033	0	0	MECHANICAL	
L	1033	0	1033	0	0	MECHANICAL	

A SUITABLE HANGER/MECHANICAL CONNECTION IS REQUIRED AT JOINT G, L. MINIMUM BEARING LENGTH AT JOINT G = 1-8, JOINT L = 2-14.

VALUE IN PARENTHESIS INDICATES EFFECTIVE BEARING LENGTH

UNFACTORED REACTIONS

JT	1ST LCASE COMBINED	MAX./MIN. COMPONENT REACTIONS SNOW	LIVE	PERM.LIVE	WIND	DEAD	SOIL
G	737	450 / 0	0 / 0	0 / 0	0 / 0	287 / 0	0 / 0
L	737	450 / 0	0 / 0	0 / 0	0 / 0	287 / 0	0 / 0

BRACING
TOP CHORD TO BE SHEATHED OR MAX. PURLIN SPACING = 3.41 FT.
MAX. UNBRACED BOTTOM CHORD LENGTH = 10.00 FT OR RIGID CEILING DIRECTLY APPLIED.

ALL PITCH BREAKS AND PERIMETER CORNER JOINTS MUST BE LATERALLY RESTRAINED.

1 LATERAL BRACE(S) AT 1/ 2 LENGTH OF B-I.

END VERTICAL(S) MUST BE SHEATHED OR HAVE BRACES AS INDICATED IN THE MAX. UNBRACED LENGTH COLUMN OF THE TABLE BELOW

LOADING
TOTAL LOAD CASES: (4)

CHORDS

MEMB. FR-TO	MAX. FACTORED FORCE (LBS)	FACTORED VERT. LOAD LC1 (PLF) FROM	TO	MAX CSI (LC)	MAX. UNBRAC LENGTH
A- B	-2811 / 0	-78.0	-78.0	0.87 (1)	3.41
B- C	-1732 / 0	-78.0	-78.0	0.64 (1)	4.35
C- D	-1732 / 0	-78.0	-78.0	0.64 (1)	4.35
D- E	-2097 / 0	-78.0	-78.0	0.34 (1)	4.36
E- F	-2139 / 0	-78.0	-78.0	0.15 (1)	4.53
G- F	-1016 / 0	0.0	0.0	0.10 (1)	7.77
L- A	-972 / 0	0.0	0.0	0.10 (1)	7.81
L- K	0 / 6	-18.5	-18.5	0.22 (4)	10.00
K- J	0 / 2655	-18.5	-18.5	0.52 (1)	10.00
J- I	0 / 2655	-18.5	-18.5	0.52 (1)	10.00
I- H	0 / 1594	-18.5	-18.5	0.35 (1)	10.00
H- G	0 / 0	-18.5	-18.5	0.02 (4)	10.00

WEBS

MEMB. FR-TO	MAX. FACTORED FORCE (LBS)	MAX CSI (LC)
K- B	-246 / 18	0.04 (1)
B- I	-967 / 0	0.38 (1)
I- D	0 / 430	0.10 (1)
D- H	0 / 684	0.15 (1)
H- E	-344 / 0	0.05 (1)
H- F	0 / 2366	0.53 (1)
A- K	0 / 2510	0.56 (1)

DESIGN CRITERIA

SPECIFIED LOADS:

TOP CH.	LL	=	21.0	PSF
	DL	=	6.0	PSF
BOT CH.	LL	=	0.0	PSF
	DL	=	7.4	PSF
TOTAL LOAD		=	34.4	PSF

SPACING = 24.0 IN. C/C

LOADING IN FLAT SECTION BASED ON A SLOPE OF 2.00/12 MINIMUM

THIS TRUSS IS DESIGNED FOR RESIDENTIAL OR SMALL BUILDING REQUIREMENTS OF PART 9, NBCC 2015

THIS DESIGN COMPLIES WITH:
- PART 9 OF BCBC 2018 , ABC 2019
- PART 9 OF OBC 2012 (2019 AMENDMENT)
- CSA 086-14
- TPIC 2014

(55 % OF 23.0 P.S.F. G.S.L. PLUS 8.4 P.S.F. RAIN LOAD) EQUALS 21.0 P.S.F. SPECIFIED ROOF LIVE LOAD

ALLOWABLE DEFL.(LL)= L/360 (0.71")
CALCULATED VERT. DEFL.(LL) = L/ 999 (0.17")
ALLOWABLE DEFL.(TL)= L/360 (0.71")
CALCULATED VERT. DEFL.(TL) = L/ 779 (0.33")

CSI: TC=0.87/1.00 (A-B:1) , BC=0.52/1.00 (I-K:1) , WB=0.56/1.00 (A-K:1) , SSI=0.23/1.00 (A-B:1)

DOL LUMBER=1.00 NAIL=1.00 LS BEND=1.10 COMP=1.10 SHEAR=1.10 TENS= 1.10

COMPANION LIVE LOAD FACTOR = 1.00

TRUSS PLATE MANUFACTURER IS NOT RESPONSIBLE FOR QUALITY CONTROL IN THE TRUSS MANUFACTURING PLANT .

NAIL VALUES

PLATE	GRIP(DRY) (PSI) MAX	MIN	SHEAR (PLI) MAX	MIN	SECTION (PLI) MAX	MIN
MT20	650	371	1747	788	1987	1873

PLATE PLACEMENT TOL. = 0.250 inches

PLATE ROTATION TOL. = 5.0 Deg.

JSI GRIP= 0.87 (F) (INPUT = 0.90)
JSI METAL= 0.71 (A) (INPUT = 1.00)

JOB NAME	TRUSS NAME	QUANTITY	PLY	JOB DESC.	DRWG NO.
343190	H14T		1	TRUSS DESC. JT 45147	E22052718

Alpa Roof Truss, Maple

Version 8.530 S Feb 23 2022 MiTek Industries, Inc. Tue Jun 7 13:30:14 2022 Page 1
ID:MF8iiriaTok7DlbpT4B71Xys4PG-bNAcfst4wwH3n7l9bhTg8OqFLnogKfvuJcBddAz8gVN

Scale = 1:54.2

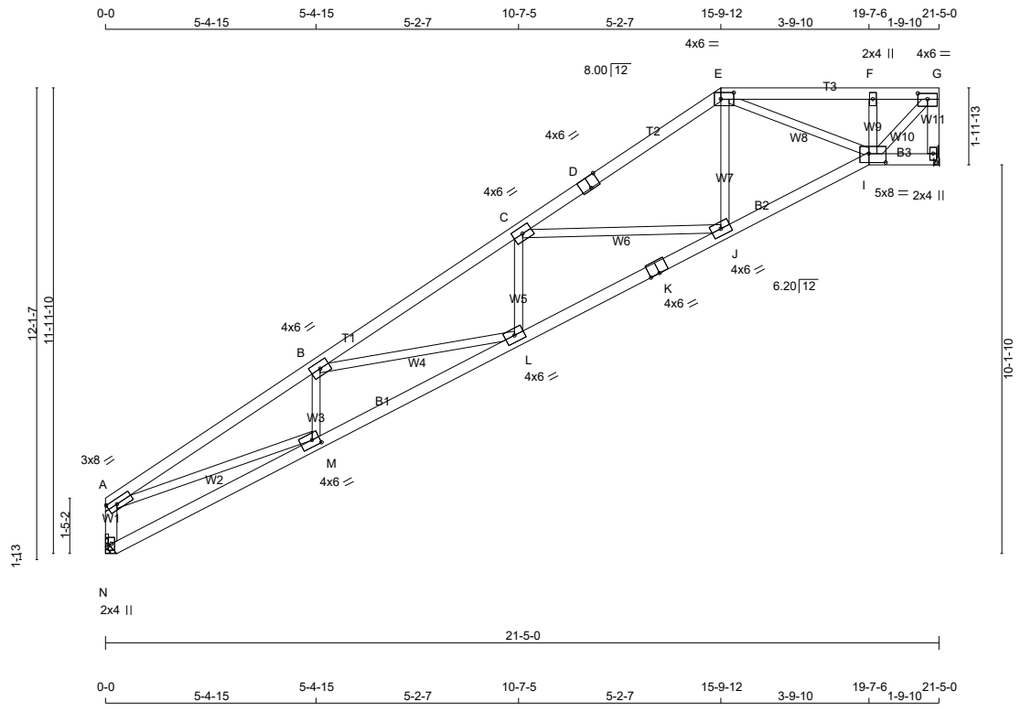

TOTAL WEIGHT = 83 lb

[M][F]

LUMBER

N. L. G. A. RULES

CHORDS	SIZE		LUMBER	DESCR.
A - D	2x4	DRY	No.2	SPF
D - E	2x4	DRY	No.2	SPF
E - G	2x4	DRY	No.2	SPF
H - G	2x4	DRY	No.2	SPF
N - A	2x4	DRY	No.2	SPF
N - K	2x4	DRY	No.2	SPF
K - I	2x4	DRY	No.2	SPF
I - H	2x4	DRY	No.2	SPF
ALL WEBS EXCEPT	2x3	DRY	No.2	SPF

DRY: SEASONED LUMBER.

PLATES (table is in inches)

JT	TYPE	PLATES	W	LEN	Y	X
A	TMVW-t	MT20	3.0	8.0	1.50	3.00
B	TMWW-t	MT20	4.0	6.0		
C	TMWW-t	MT20	4.0	6.0		
D	TS-t	MT20	4.0	6.0	Edge	3.00
E	TTWW-l	MT20	4.0	6.0	2.00	4.00
F	TMW+w	MT20	2.0	4.0		
G	TMVW-t	MT20	4.0	6.0	1.75	3.00
H	BMV1+p	MT20	2.0	4.0		
I	BBWWW-p	MT20	5.0	8.0	2.75	5.25
J	BMWW-t	MT20	4.0	6.0		
K	BS-t	MT20	4.0	6.0		
L	BMWW-t	MT20	4.0	6.0		
M	BMWW-t	MT20	4.0	6.0	2.00	2.25
N	BMV1+p	MT20	2.0	4.0		

Edge - INDICATES REFERENCE CORNER OF PLATE TOUCHES EDGE OF CHORD.

LATERAL BRACE(S) SHOWN SHALL BE 2X4 SPF#2

LICENSED PROFESSIONAL ENGINEER
V. WIDYA
100225448
06/07/2022
PROVINCE OF ONTARIO

DIMENSIONS, SUPPORTS AND LOADINGS SPECIFIED BY FABRICATOR TO BE VERIFIED BY BUILDING DESIGNER

BEARINGS

JT	FACTORED GROSS REACTION VERT	HORZ	MAXIMUM FACTORED GROSS REACTION DOWN	HORZ	UPLIFT	INPUT BRG	REQRD BRG
H	1033	0	1033	0	0	MECHANICAL	
N	1033	0	1033	0	0	MECHANICAL	

A SUITABLE HANGER/MECHANICAL CONNECTION IS REQUIRED AT JOINT H, N. MINIMUM BEARING LENGTH AT JOINT H = 1-8, JOINT N = 3-8.

UNFACTORED REACTIONS

JT	1ST LCASE COMBINED	MAX./MIN. COMPONENT REACTIONS SNOW	LIVE	PERM.LIVE	WIND	DEAD	SOIL
H	737	450 / 0	0 / 0	0 / 0	0 / 0	287 / 0	0 / 0
N	737	450 / 0	0 / 0	0 / 0	0 / 0	287 / 0	0 / 0

BRACING

TOP CHORD TO BE SHEATHED OR MAX. PURLIN SPACING = 3.98 FT.
MAX. UNBRACED BOTTOM CHORD LENGTH = 10.00 FT OR RIGID CEILING DIRECTLY APPLIED.

ALL PITCH BREAKS AND PERIMETER CORNER JOINTS MUST BE LATERALLY RESTRAINED.

LOADING

TOTAL LOAD CASES: (4)

CHORDS

MEMB. FR-TO	MAX. FACTORED FORCE (LBS)	FACTORED VERT. LOAD (PLF) FROM	TO	LC1 MAX CSI (LC)	MAX. UNBRAC LENGTH
A- B	-2567 / 0	-78.0	-78.0	0.41 (1)	3.98
B- C	-2441 / 0	-78.0	-78.0	0.32 (1)	4.16
C- D	-1434 / 0	-78.0	-78.0	0.28 (1)	5.17
D- E	-1434 / 0	-78.0	-78.0	0.28 (1)	5.17
E- F	-1050 / 0	-78.0	-78.0	0.15 (1)	5.98
F- G	-1068 / 0	-78.0	-78.0	0.10 (1)	6.00
H- G	-1016 / 0	0.0	0.0	0.11 (1)	7.77
N- A	-985 / 0	0.0	0.0	0.10 (1)	7.81
N- M	0 / 4	-18.5	-18.5	0.12 (4)	10.00
M- L	0 / 2403	-18.5	-18.5	0.44 (1)	10.00
L- K	0 / 2289	-18.5	-18.5	0.42 (1)	10.00
K- J	0 / 2289	-18.5	-18.5	0.42 (1)	10.00
J- I	0 / 1334	-18.5	-18.5	0.26 (1)	10.00
I- H	0 / 0	-18.5	-18.5	0.02 (4)	10.00

WEBS

MEMB. FR-TO	MAX. FACTORED FORCE (LBS)	MAX CSI (LC)
M- B	-378 / 0	0.06 (1)
B- L	-102 / 0	0.05 (1)
L- C	0 / 137	0.04 (4)
C- J	-859 / 0	0.42 (1)
J- E	0 / 547	0.12 (1)
E- I	-152 / 0	0.04 (1)
I- F	-285 / 0	0.04 (1)
I- G	0 / 1462	0.33 (1)
A- M	0 / 2241	0.50 (1)

DESIGN CRITERIA

SPECIFIED LOADS:

TOP CH.	LL	=	21.0	PSF
	DL	=	6.0	PSF
BOT CH.	LL	=	0.0	PSF
	DL	=	7.4	PSF
TOTAL LOAD		=	34.4	PSF

SPACING = 24.0 IN. C/C

LOADING IN FLAT SECTION BASED ON A SLOPE OF 2.00/12 MINIMUM

THIS TRUSS IS DESIGNED FOR RESIDENTIAL OR SMALL BUILDING REQUIREMENTS OF PART 9, NBCC 2015

THIS DESIGN COMPLIES WITH:
- PART 9 OF BCBC 2018 , ABC 2019
- PART 9 OF OBC 2012 (2019 AMENDMENT)
- CSA 086-14
- TPIC 2014

(55 % OF 23.0 P.S.F. G.S.L. PLUS 8.4 P.S.F. RAIN LOAD) EQUALS 21.0 P.S.F. SPECIFIED ROOF LIVE LOAD

ALLOWABLE DEFL.(LL)= L/360 (0.71")
CALCULATED VERT. DEFL.(LL) = L/ 999 (0.13")
ALLOWABLE DEFL.(TL)= L/360 (0.71")
CALCULATED VERT. DEFL.(TL) = L/ 999 (0.25")

CSI: TC=0.41/1.00 (A-B:1) , BC=0.44/1.00 (L-M:1) , WB=0.50/1.00 (A-M:1) , SSI=0.16/1.00 (A-B:1)

DOL LUMBER=1.00 NAIL=1.00 LS BEND=1.10 COMP=1.10 SHEAR=1.10 TENS= 1.10

COMPANION LIVE LOAD FACTOR = 1.00

TRUSS PLATE MANUFACTURER IS NOT RESPONSIBLE FOR QUALITY CONTROL IN THE TRUSS MANUFACTURING PLANT .

NAIL VALUES

PLATE	GRIP(DRY) (PSI) MAX	MIN	SHEAR (PLI) MAX	MIN	SECTION (PLI) MAX	MIN
MT20	650	371	1747	788	1987	1873

PLATE PLACEMENT TOL. = 0.250 inches

PLATE ROTATION TOL. = 5.0 Deg.

JSI GRIP= 0.89 (M) (INPUT = 0.90)
JSI METAL= 0.54 (M) (INPUT = 1.00)

JOB NAME	TRUSS NAME	QUANTITY	PLY	JOB DESC.	DRWG NO.
343190	H15T		1	TRUSS DESC. JT 45147	E22052719

Alpa Roof Truss, Maple

Version 8.530 S Feb 23 2022 MiTek Industries, Inc. Tue Jun 7 13:30:16 2022 Page 1

ID:MF8iiriaTok7DlbpT4B71Xys4PG-XlHN4XvKSYXn0RvXj6W8DpvahaTyoXxBnwgkh2z8qVL

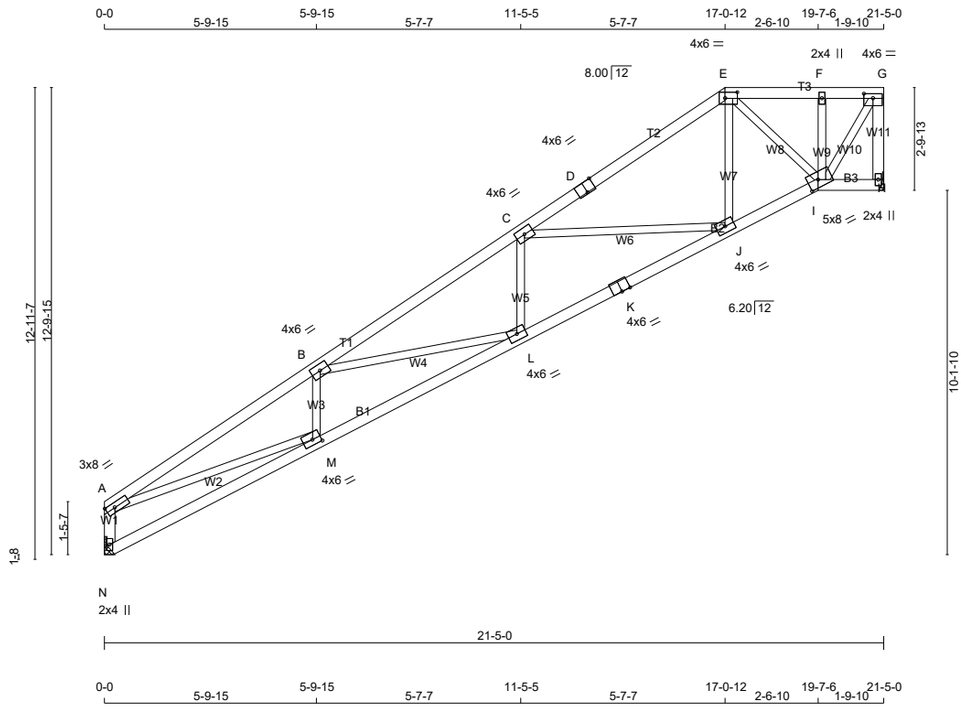

TOTAL WEIGHT = 87 lb

[M][F]

LUMBER

N. L. G. A. RULES

CHORDS	SIZE		LUMBER	DESCR.
A - D	2x4	DRY	No.2	SPF
D - E	2x4	DRY	No.2	SPF
E - G	2x4	DRY	No.2	SPF
H - G	2x4	DRY	No.2	SPF
N - A	2x4	DRY	No.2	SPF
N - K	2x4	DRY	No.2	SPF
K - I	2x4	DRY	No.2	SPF
I - H	2x4	DRY	No.2	SPF
ALL WEBS EXCEPT	2x3	DRY	No.2	SPF

DRY: SEASONED LUMBER.

PLATES (table is in inches)

JT	TYPE	PLATES	W	LEN	Y	X
A	TMVW-t	MT20	3.0	8.0	1.50	3.00
B	TMWW-t	MT20	4.0	6.0		
C	TMWW-t	MT20	4.0	6.0		
D	TS-t	MT20	4.0	6.0	Edge	3.00
E	TTWW-l	MT20	4.0	6.0	2.00	4.00
F	TMW+w	MT20	2.0	4.0		
G	TMVW-t	MT20	4.0	6.0	1.50	3.00
H	BMV1+p	MT20	2.0	4.0		
I	BBWWW-h	MT20	5.0	8.0	2.50	3.50
J	BMWW-t	MT20	4.0	6.0		
K	BS-t	MT20	4.0	6.0		
L	BMWW-t	MT20	4.0	6.0		
M	BMWW-t	MT20	4.0	6.0	1.75	2.75
N	BMV1+p	MT20	2.0	4.0		

Edge - INDICATES REFERENCE CORNER OF PLATE TOUCHES EDGE OF CHORD.

LATERAL BRACE(S) SHOWN SHALL BE 2X4 SPF#2

LICENSED PROFESSIONAL ENGINEER
V. WIDYA
100225448
06/07/2022
PROVINCE OF ONTARIO

DIMENSIONS, SUPPORTS AND LOADINGS SPECIFIED BY FABRICATOR TO BE VERIFIED BY BUILDING DESIGNER

BEARINGS

JT	FACTORED GROSS REACTION VERT	HORZ	MAXIMUM FACTORED GROSS REACTION DOWN	HORZ	UPLIFT	INPUT BRG	REQRD BRG
H	1033	0	1033	0	0	MECHANICAL	
N	1033	0	1033	0	0	MECHANICAL	

A SUITABLE HANGER/MECHANICAL CONNECTION IS REQUIRED AT JOINT H, N. MINIMUM BEARING LENGTH AT JOINT H = 1-8, JOINT N = 2-14.

VALUE IN PARENTHESIS INDICATES EFFECTIVE BEARING LENGTH

UNFACTORED REACTIONS

JT	1ST LCASE COMBINED	MAX./MIN. COMPONENT REACTIONS SNOW	LIVE	PERM.LIVE	WIND	DEAD	SOIL
H	737	450 / 0	0 / 0	0 / 0	0 / 0	287 / 0	0 / 0
N	737	450 / 0	0 / 0	0 / 0	0 / 0	287 / 0	0 / 0

BRACING

TOP CHORD TO BE SHEATHED OR MAX. PURLIN SPACING = 3.88 FT.
MAX. UNBRACED BOTTOM CHORD LENGTH = 10.00 FT OR RIGID CEILING DIRECTLY APPLIED.

ALL PITCH BREAKS AND PERIMETER CORNER JOINTS MUST BE LATERALLY RESTRAINED.

LOADING

TOTAL LOAD CASES: (4)

CHORDS

MEMB. FR-TO	MAX. FACTORED FORCE (LBS)	VERT. LOAD LC1 (PLF) FROM	TO	CSI (LC)	MAX UNBRAC LENGTH
A- B	-2628 / 0	-78.0	-78.0	0.49 (1)	3.88
B- C	-2346 / 0	-78.0	-78.0	0.37 (1)	4.19
C- D	-1146 / 0	-78.0	-78.0	0.31 (1)	5.58
D- E	-1146 / 0	-78.0	-78.0	0.31 (1)	5.58
E- F	-684 / 0	-78.0	-78.0	0.07 (1)	6.25
F- G	-692 / 0	-78.0	-78.0	0.04 (1)	6.25
H- G	-1016 / 0	0.0	0.0	0.14 (1)	7.77
N- A	-982 / 0	0.0	0.0	0.10 (1)	7.81
N- M	0 / 4	-18.5	-18.5	0.14 (4)	10.00
M- L	0 / 2464	-18.5	-18.5	0.45 (1)	10.00
L- K	0 / 2199	-18.5	-18.5	0.41 (1)	10.00
K- J	0 / 2199	-18.5	-18.5	0.41 (1)	10.00
J- I	0 / 1061	-18.5	-18.5	0.22 (1)	10.00
I- H	0 / 0	-18.5	-18.5	0.02 (4)	10.00

WEBS

MEMB. FR-TO	MAX. FACTORED FORCE (LBS)	MAX CSI (LC)
M- B	-347 / 0	0.05 (1)
B- L	-237 / 0	0.14 (1)
L- C	0 / 195	0.05 (4)
C- J	-1020 / 0	0.60 (1)
J- E	0 / 612	0.14 (1)
E- I	-373 / 0	0.08 (1)
I- F	-196 / 0	0.03 (1)
I- G	0 / 1190	0.27 (1)
A- M	0 / 2305	0.52 (1)

DESIGN CRITERIA

SPECIFIED LOADS:

TOP CH.	LL	=	21.0	PSF
	DL	=	6.0	PSF
BOT CH.	LL	=	0.0	PSF
	DL	=	7.4	PSF
TOTAL LOAD		=	34.4	PSF

SPACING = 24.0 IN. C/C

LOADING IN FLAT SECTION BASED ON A SLOPE OF 2.00/12 MINIMUM

THIS TRUSS IS DESIGNED FOR RESIDENTIAL OR SMALL BUILDING REQUIREMENTS OF PART 9, NBCC 2015

THIS DESIGN COMPLIES WITH:
- PART 9 OF BCBC 2018 , ABC 2019
- PART 9 OF OBC 2012 (2019 AMENDMENT)
- CSA 086-14
- TPIC 2014

(55 % OF 23.0 P.S.F. G.S.L. PLUS 8.4 P.S.F. RAIN LOAD) EQUALS 21.0 P.S.F. SPECIFIED ROOF LIVE LOAD

ALLOWABLE DEFL.(LL)= L/360 (0.71")
CALCULATED VERT. DEFL.(LL) = L/ 999 (0.13")
ALLOWABLE DEFL.(TL)= L/360 (0.71")
CALCULATED VERT. DEFL.(TL) = L/ 962 (0.27")

CSI: TC=0.49/1.00 (A-B:1) , BC=0.45/1.00 (L-M:1) , WB=0.60/1.00 (C-J:1) , SSI=0.17/1.00 (A-B:1)

DOL LUMBER=1.00 NAIL=1.00 LS BEND=1.10 COMP=1.10 SHEAR=1.10 TENS= 1.10

COMPANION LIVE LOAD FACTOR = 1.00

TRUSS PLATE MANUFACTURER IS NOT RESPONSIBLE FOR QUALITY CONTROL IN THE TRUSS MANUFACTURING PLANT .

NAIL VALUES

PLATE	GRIP(DRY) (PSI) MAX	MIN	SHEAR (PLI) MAX	MIN	SECTION (PLI) MAX	MIN
MT20	650	371	1747	788	1987	1873

PLATE PLACEMENT TOL. = 0.250 inches

PLATE ROTATION TOL. = 5.0 Deg.

JSI GRIP= 0.89 (A) (INPUT = 0.90)
JSI METAL= 0.57 (M) (INPUT = 1.00)

JOB NAME	TRUSS NAME	QUANTITY	PLY	JOB DESC.	DRWG NO.
343190	H16T		1	TRUSS DESC. JT 45147	E22052720

Alpa Roof Truss, Maple

Version 8.530 S Feb 23 2022 MiTek Industries, Inc. Tue Jun 7 13:30:17 2022 Page 1
ID:MF8iiriaTok7DlbpT4B71Xys4PG-?yrlHtwyDrfeebUkGp1Nl0Sk6 p0XxfK?aPHDVz8gVK

Scale = 1:61.6

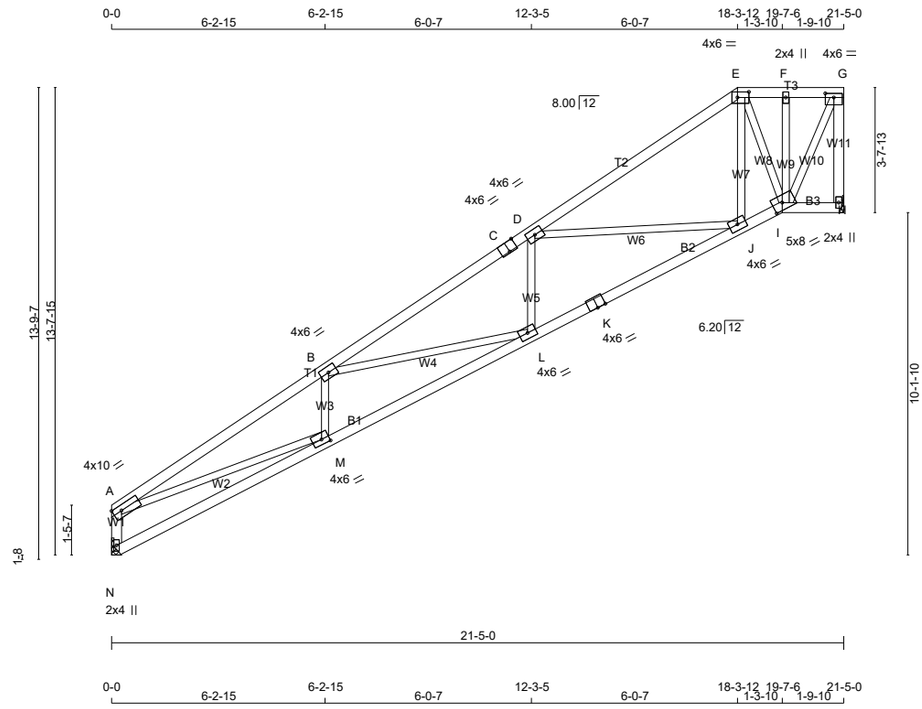

TOTAL WEIGHT = 91 lb

LUMBER
N. L. G. A. RULES

CHORDS	SIZE		LUMBER	DESCR.
A - C	2x4	DRY	No.2	SPF
C - E	2x4	DRY	No.2	SPF
E - G	2x4	DRY	No.2	SPF
H - G	2x4	DRY	No.2	SPF
N - A	2x4	DRY	No.2	SPF
N - K	2x4	DRY	No.2	SPF
K - I	2x4	DRY	No.2	SPF
I - H	2x4	DRY	No.2	SPF
ALL WEBS EXCEPT	2x3	DRY	No.2	SPF

DRY: SEASONED LUMBER.

PLATES (table is in inches)

JT	TYPE	PLATES	W	LEN	Y	X
A	TMVW-t	MT20	4.0	10.0	1.75	Edge
B	TMWW-t	MT20	4.0	6.0		
C	TS-t	MT20	4.0	6.0	Edge	3.00
D	TMWW-t	MT20	4.0	6.0		
E	TTWW-l	MT20	4.0	6.0	2.00	4.00
F	TMW+w	MT20	2.0	4.0		
G	TMVW-t	MT20	4.0	6.0	1.50	3.00
H	BMV1+p	MT20	2.0	4.0		
I	BBWWW-h	MT20	5.0	8.0	2.50	3.50
J	BMWW-t	MT20	4.0	6.0		
K	BS-t	MT20	4.0	6.0		
L	BMWW-t	MT20	4.0	6.0		
M	BMWW-t	MT20	4.0	6.0	1.75	2.75
N	BMV1+p	MT20	2.0	4.0		

Edge - INDICATES REFERENCE CORNER OF PLATE TOUCHES EDGE OF CHORD.

LATERAL BRACE(S) SHOWN SHALL BE 2X4 SPF#2

DIMENSIONS, SUPPORTS AND LOADINGS SPECIFIED BY FABRICATOR TO BE VERIFIED BY BUILDING DESIGNER

BEARINGS

JT	FACTORED GROSS REACTION VERT	HORZ	MAXIMUM FACTORED GROSS REACTION DOWN	HORZ	UPLIFT	INPUT BRG	REQRD BRG
H	1033	0	1033	0	0	MECHANICAL	
N	1033	0	1033	0	0	MECHANICAL	

A SUITABLE HANGER/MECHANICAL CONNECTION IS REQUIRED AT JOINT H, N. MINIMUM BEARING LENGTH AT JOINT H = 1-8, JOINT N = 2-14.

VALUE IN PARENTHESIS INDICATES EFFECTIVE BEARING LENGTH

UNFACTORED REACTIONS

JT	1ST LCASE COMBINED	MAX./MIN. COMPONENT REACTIONS SNOW	LIVE	PERM.LIVE	WIND	DEAD	SOIL
H	737	450 / 0	0 / 0	0 / 0	0 / 0	287 / 0	0 / 0
N	737	450 / 0	0 / 0	0 / 0	0 / 0	287 / 0	0 / 0

BRACING
TOP CHORD TO BE SHEATHED OR MAX. PURLIN SPACING = 3.77 FT.
MAX. UNBRACED BOTTOM CHORD LENGTH = 10.00 FT OR RIGID CEILING DIRECTLY APPLIED.

ALL PITCH BREAKS AND PERIMETER CORNER JOINTS MUST BE LATERALLY RESTRAINED.

LOADING
TOTAL LOAD CASES: (4)

CHORDS

MEMB. FR-TO	MAX. FACTORED FORCE (LBS)	FACTORED VERT. LOAD (PLF) FROM	TO	LC1 CSI (LC)	MAX UNBRAC LENGTH
A- B	-2678 / 0	-78.0	-78.0	0.57 (1)	3.77
B- C	-2233 / 0	-78.0	-78.0	0.42 (1)	4.24
C- D	-2233 / 0	-78.0	-78.0	0.42 (1)	4.24
D- E	-842 / 0	-78.0	-78.0	0.35 (1)	6.20
E- F	-508 / 0	-78.0	-78.0	0.02 (1)	6.25
F- G	-511 / 0	-78.0	-78.0	0.03 (1)	6.25
H- G	-1016 / 0	0.0	0.0	0.21 (1)	7.77
N- A	-979 / 0	0.0	0.0	0.10 (1)	7.81
N- M	0 / 5	-18.5	-18.5	0.16 (4)	10.00
M- L	0 / 2515	-18.5	-18.5	0.47 (1)	10.00
L- K	0 / 2093	-18.5	-18.5	0.40 (1)	10.00
K- J	0 / 2093	-18.5	-18.5	0.40 (1)	10.00
J- I	0 / 767	-18.5	-18.5	0.18 (4)	10.00
I- H	0 / 0	-18.5	-18.5	0.02 (4)	10.00

WEBS

MEMB. FR-TO	MAX. FACTORED FORCE (LBS)	MAX CSI (LC)
M- B	-317 / 0	0.05 (1)
B- L	-378 / 0	0.27 (1)
L- D	0 / 250	0.06 (4)
D- J	-1181 / 0	0.82 (1)
J- E	0 / 690	0.16 (1)
E- I	-520 / 0	0.12 (1)
I- F	-120 / 0	0.03 (1)
I- G	0 / 1081	0.24 (1)
A- M	0 / 2360	0.53 (1)

[M][F]

DESIGN CRITERIA

SPECIFIED LOADS:

TOP CH.	LL	=	21.0	PSF
	DL	=	6.0	PSF
BOT CH.	LL	=	0.0	PSF
	DL	=	7.4	PSF
TOTAL LOAD		=	34.4	PSF

SPACING = 24.0 IN. C/C

LOADING IN FLAT SECTION BASED ON A SLOPE OF 2.00/12 MINIMUM

THIS TRUSS IS DESIGNED FOR RESIDENTIAL OR SMALL BUILDING REQUIREMENTS OF PART 9, NBCC 2015

THIS DESIGN COMPLIES WITH:
- PART 9 OF BCBC 2018 , ABC 2019
- PART 9 OF OBC 2012 (2019 AMENDMENT)
- CSA 086-14
- TPIC 2014

(55 % OF 23.0 P.S.F. G.S.L. PLUS 8.4 P.S.F. RAIN LOAD) EQUALS 21.0 P.S.F. SPECIFIED ROOF LIVE LOAD

ALLOWABLE DEFL.(LL)= L/360 (0.71")
CALCULATED VERT. DEFL.(LL) = L/ 999 (0.14")
ALLOWABLE DEFL.(TL)= L/360 (0.71")
CALCULATED VERT. DEFL.(TL) = L/ 908 (0.28")

CSI: TC=0.57/1.00 (A-B:1) , BC=0.47/1.00 (L-M:1) , WB=0.82/1.00 (D-J:1) , SSI=0.18/1.00 (A-B:1)

DOL LUMBER=1.00 NAIL=1.00 LS BEND=1.10 COMP=1.10 SHEAR=1.10 TENS= 1.10

COMPANION LIVE LOAD FACTOR = 1.00

TRUSS PLATE MANUFACTURER IS NOT RESPONSIBLE FOR QUALITY CONTROL IN THE TRUSS MANUFACTURING PLANT .

NAIL VALUES

PLATE	GRIP(DRY) (PSI) MAX	MIN	SHEAR (PLI) MAX	MIN	SECTION (PLI) MAX	MIN
MT20	650	371	1747	788	1987	1873

PLATE PLACEMENT TOL. = 0.250 inches

PLATE ROTATION TOL. = 5.0 Deg.

JSI GRIP= 0.86 (G) (INPUT = 0.90)
JSI METAL= 0.59 (M) (INPUT = 1.00)

JOB NAME	TRUSS NAME	QUANTITY	PLY	JOB DESC.	DRWG NO.
343190	H17T		1	TRUSS DESC. JT 45147	E22052721

Alpa Roof Truss, Maple

Version 8.530 S Feb 23 2022 MiTek Industries, Inc. Tue Jun 7 13:30:19 2022 Page 1
ID:MF8iiriaTok7DlbpT4B71Xys4PG-yKzViZxDlTvMtue6OE3rrRX26oUv?vadTuuOINz8gVI

Scale = 1:65.2

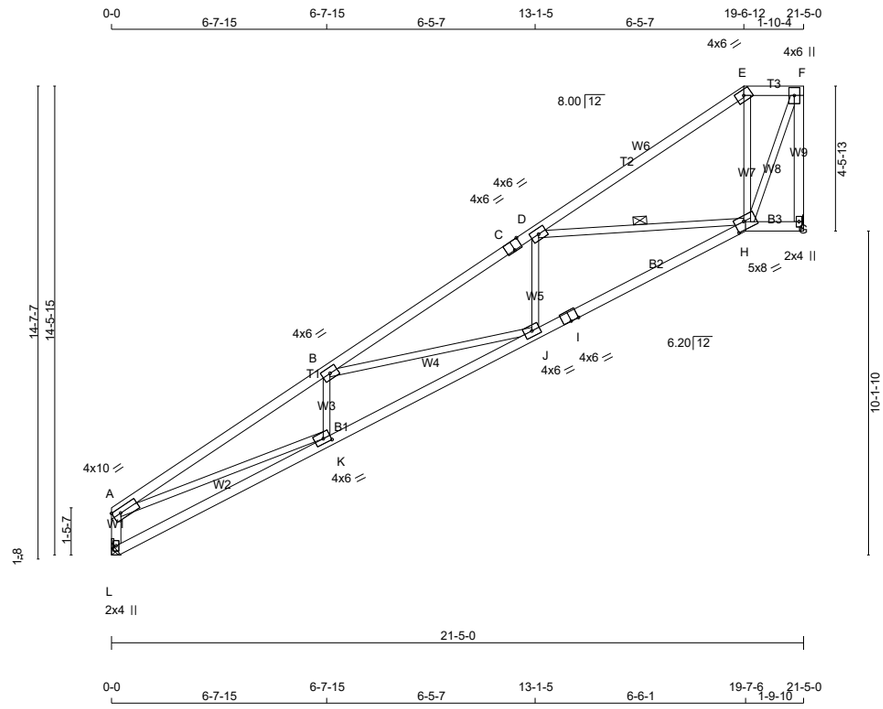

TOTAL WEIGHT = 89 lb

[M][F]

LUMBER

N. L. G. A. RULES

CHORDS	SIZE		LUMBER	DESCR.
A - C	2x4	DRY	No.2	SPF
C - E	2x4	DRY	No.2	SPF
E - F	2x4	DRY	No.2	SPF
G - F	2x4	DRY	No.2	SPF
L - A	2x4	DRY	No.2	SPF
L - I	2x4	DRY	No.2	SPF
I - H	2x4	DRY	No.2	SPF
H - G	2x4	DRY	No.2	SPF
ALL WEBS EXCEPT	2x3	DRY	No.2	SPF

DRY: SEASONED LUMBER.

PLATES (table is in inches)

JT	TYPE	PLATES	W	LEN	Y	X
A	TMVW-t	MT20	4.0	10.0	1.75	Edge
B	TMWW-t	MT20	4.0	6.0		
C	TS-t	MT20	4.0	6.0	Edge	3.00
D	TMWW-t	MT20	4.0	6.0		
E	TTW-h	MT20	4.0	6.0		
F	TMVW+p	MT20	4.0	6.0		
G	BMV1+p	MT20	2.0	4.0		
H	BBWWW-h	MT20	5.0	8.0	3.00	3.50
I	BS-t	MT20	4.0	6.0		
J	BMWW-t	MT20	4.0	6.0		
K	BMWW-t	MT20	4.0	6.0	1.75	2.75
L	BMV1+p	MT20	2.0	4.0		

Edge - INDICATES REFERENCE CORNER OF PLATE TOUCHES EDGE OF CHORD.

LATERAL BRACE(S) SHOWN SHALL BE 2X4 SPF#2

DIMENSIONS, SUPPORTS AND LOADINGS SPECIFIED BY FABRICATOR TO BE VERIFIED BY BUILDING DESIGNER

BEARINGS

JT	FACTORED GROSS REACTION VERT	HORZ	MAXIMUM FACTORED GROSS REACTION DOWN	HORZ	UPLIFT	INPUT BRG	REQRD BRG
G	1033	0	1033	0	0	MECHANICAL	
L	1033	0	1033	0	0	MECHANICAL	

A SUITABLE HANGER/MECHANICAL CONNECTION IS REQUIRED AT JOINT G, L. MINIMUM BEARING LENGTH AT JOINT G = 1-8, JOINT L = 2-14.

VALUE IN PARENTHESIS INDICATES EFFECTIVE BEARING LENGTH

UNFACTORED REACTIONS

JT	1ST LCASE COMBINED	MAX./MIN. COMPONENT REACTIONS SNOW	LIVE	PERM.LIVE	WIND	DEAD	SOIL
G	737	450 / 0	0 / 0	0 / 0	0 / 0	287 / 0	0 / 0
L	737	450 / 0	0 / 0	0 / 0	0 / 0	287 / 0	0 / 0

BRACING

TOP CHORD TO BE SHEATHED OR MAX. PURLIN SPACING = 3.67 FT.
MAX. UNBRACED BOTTOM CHORD LENGTH = 10.00 FT OR RIGID CEILING DIRECTLY APPLIED.

ALL PITCH BREAKS AND PERIMETER CORNER JOINTS MUST BE LATERALLY RESTRAINED.

1 LATERAL BRACE(S) AT 1/ 2 LENGTH OF D-H.

END VERTICAL(S) MUST BE SHEATHED OR HAVE BRACES AS INDICATED IN THE MAX. UNBRACED LENGTH COLUMN OF THE TABLE BELOW

LOADING

TOTAL LOAD CASES: (4)

CHORDS

MEMB. FR-TO	MAX. FACTORED FORCE (LBS)	FACTORED VERT. LOAD (PLF) FROM	TO	LC1	MAX CSI (LC)	MAX. UNBRAC LENGTH
A- B	-2716 / 0	-78.0	-78.0	0.67 (1)	3.67	
B- C	-2111 / 0	-78.0	-78.0	0.47 (1)	4.28	
C- D	-2111 / 0	-78.0	-78.0	0.47 (1)	4.28	
D- E	-518 / 0	-78.0	-78.0	0.39 (1)	6.25	
E- F	-408 / 0	-78.0	-78.0	0.04 (1)	6.25	
G- F	-1016 / 0	0.0	0.0	0.32 (1)	7.77	
L- A	-976 / 0	0.0	0.0	0.10 (1)	7.81	
L- K	0 / 5	-18.5	-18.5	0.18 (4)	10.00	
K- J	0 / 2556	-18.5	-18.5	0.50 (1)	10.00	
J- I	0 / 1973	-18.5	-18.5	0.41 (1)	10.00	
I- H	0 / 1973	-18.5	-18.5	0.41 (1)	10.00	
H- G	0 / 0	-18.5	-18.5	0.02 (4)	10.00	

WEBS

MEMB. FR-TO	MAX. FACTORED FORCE (LBS)	MAX CSI (LC)
K- B	-291 / 0	0.05 (1)
B- J	-518 / 0	0.44 (1)
J- D	0 / 314	0.08 (4)
D- H	-1351 / 0	0.41 (1)
H- E	-6 / 45	0.02 (4)
H- F	0 / 1031	0.23 (1)
A- K	0 / 2404	0.54 (1)

DESIGN CRITERIA

SPECIFIED LOADS:

TOP CH.	LL	=	21.0	PSF
	DL	=	6.0	PSF
BOT CH.	LL	=	0.0	PSF
	DL	=	7.4	PSF
TOTAL LOAD		=	34.4	PSF

SPACING = 24.0 IN. C/C

LOADING IN FLAT SECTION BASED ON A SLOPE OF 2.00/12 MINIMUM

THIS TRUSS IS DESIGNED FOR RESIDENTIAL OR SMALL BUILDING REQUIREMENTS OF PART 9, NBCC 2015

THIS DESIGN COMPLIES WITH:
- PART 9 OF BCBC 2018 , ABC 2019
- PART 9 OF OBC 2012 (2019 AMENDMENT)
- CSA 086-14
- TPIC 2014

(55 % OF 23.0 P.S.F. G.S.L. PLUS 8.4 P.S.F. RAIN LOAD) EQUALS 21.0 P.S.F. SPECIFIED ROOF LIVE LOAD

ALLOWABLE DEFL.(LL)= L/360 (0.71")
CALCULATED VERT. DEFL.(LL) = L/ 999 (0.15")
ALLOWABLE DEFL.(TL)= L/360 (0.71")
CALCULATED VERT. DEFL.(TL) = L/ 879 (0.29")

CSI: TC=0.67/1.00 (A-B:1) , BC=0.50/1.00 (J-K:1) , WB=0.54/1.00 (A-K:1) , SSI=0.20/1.00 (A-B:1)

DOL LUMBER=1.00 NAIL=1.00 LS BEND=1.10 COMP=1.10 SHEAR=1.10 TENS= 1.10

COMPANION LIVE LOAD FACTOR = 1.00

TRUSS PLATE MANUFACTURER IS NOT RESPONSIBLE FOR QUALITY CONTROL IN THE TRUSS MANUFACTURING PLANT .

NAIL VALUES

PLATE	GRIP(DRY) (PSI) MAX	MIN	SHEAR (PLI) MAX	MIN	SECTION (PLI) MAX	MIN
MT20	650	371	1747	788	1987	1873

PLATE PLACEMENT TOL. = 0.250 inches

PLATE ROTATION TOL. = 5.0 Deg.

JSI GRIP= 0.86 (K) (INPUT = 0.90)
JSI METAL= 0.59 (K) (INPUT = 1.00)

JOB NAME	TRUSS NAME	QUANTITY	PLY	JOB DESC.	DRWG NO.
343190	H18T		1	TRUSS DESC. JT 45147	E22052722

Alpa Roof Truss, Maple

Version 8.530 S Feb 23 2022 MiTek Industries, Inc. Tue Jun 7 13:30:20 2022 Page 1
ID:MF8iiriaTok7DlbpT4B71Xys4PG-QWXuwvyrWm2DV2DJyya4Nf4DwBq6kMomhYexqpz8gVH

Scale = 1:71.5

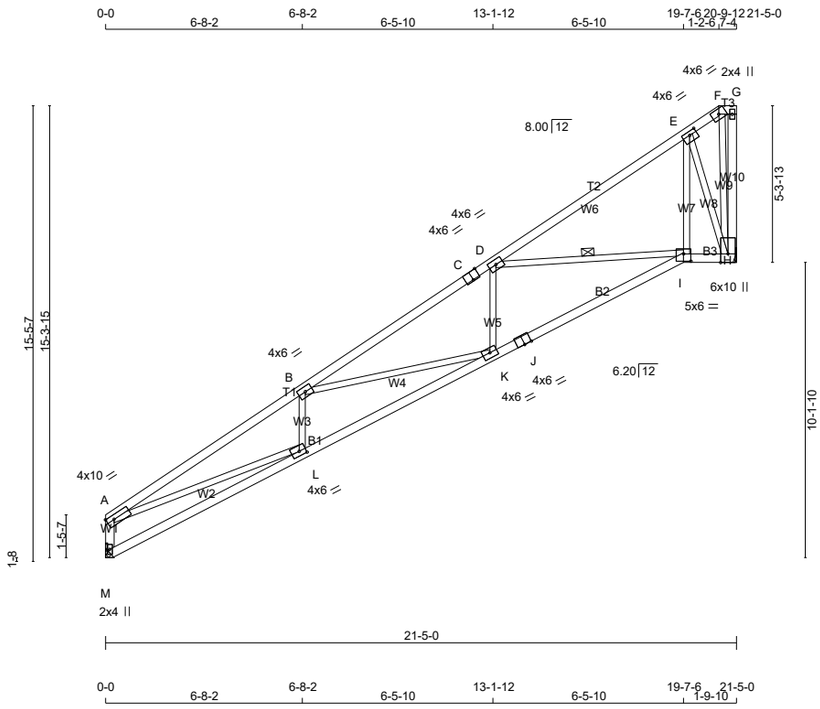

TOTAL WEIGHT = 94 lb

[M][F]

LUMBER

N. L. G. A. RULES

CHORDS	SIZE		LUMBER	DESCR.
A - C	2x4	DRY	No.2	SPF
C - F	2x4	DRY	No.2	SPF
F - G	2x4	DRY	No.2	SPF
H - G	2x4	DRY	No.2	SPF
M - A	2x4	DRY	No.2	SPF
M - J	2x4	DRY	No.2	SPF
J - I	2x4	DRY	No.2	SPF
I - H	2x4	DRY	No.2	SPF
ALL WEBS EXCEPT	2x3	DRY	No.2	SPF

DRY: SEASONED LUMBER.

PLATES (table is in inches)

JT	TYPE	PLATES	W	LEN	Y	X
A	TMVW-t	MT20	4.0	10.0	1.75	Edge
B	TMWW-t	MT20	4.0	6.0		
C	TS-t	MT20	4.0	6.0	Edge	3.00
D	TMWW-t	MT20	4.0	6.0		
E	TMWW-t	MT20	4.0	6.0	1.50	3.00
F	TTW-h	MT20	4.0	6.0		
G	TMV+p	MT20	2.0	4.0		
H	BMVWW1+p	MT20	6.0	10.0	Edge	
I	BBWW-l	MT20	5.0	6.0	3.00	3.00
J	BS-t	MT20	4.0	6.0		
K	BMWW-t	MT20	4.0	6.0		
L	BMWW-t	MT20	4.0	6.0	1.75	2.75
M	BMV1+p	MT20	2.0	4.0		

Edge - INDICATES REFERENCE CORNER OF PLATE TOUCHES EDGE OF CHORD.

LATERAL BRACE(S) SHOWN SHALL BE 2X4 SPF#2

LICENSED PROFESSIONAL ENGINEER
V. WIDYA
100225448
06/07/2022
PROVINCE OF ONTARIO

DIMENSIONS, SUPPORTS AND LOADINGS SPECIFIED BY FABRICATOR TO BE VERIFIED BY BUILDING DESIGNER

BEARINGS

JT	FACTORED GROSS REACTION VERT	HORZ	MAXIMUM FACTORED GROSS REACTION DOWN	HORZ	UPLIFT	INPUT BRG	REQRD BRG
H	1033	0	1033	0	0	MECHANICAL	
M	1033	0	1033	0	0	MECHANICAL	

A SUITABLE HANGER/MECHANICAL CONNECTION IS REQUIRED AT JOINT H, M. MINIMUM BEARING LENGTH AT JOINT H = 1-8, JOINT M = 2-14.

VALUE IN PARENTHESIS INDICATES EFFECTIVE BEARING LENGTH

UNFACTORED REACTIONS

JT	1ST LCASE COMBINED	MAX./MIN. COMPONENT REACTIONS SNOW	LIVE	PERM.LIVE	WIND	DEAD	SOIL
H	737	450 / 0	0 / 0	0 / 0	0 / 0	287 / 0	0 / 0
M	737	450 / 0	0 / 0	0 / 0	0 / 0	287 / 0	0 / 0

BRACING

TOP CHORD TO BE SHEATHED OR MAX. PURLIN SPACING = 3.67 FT.
MAX. UNBRACED BOTTOM CHORD LENGTH = 10.00 FT OR RIGID CEILING DIRECTLY APPLIED.

ALL PITCH BREAKS AND PERIMETER CORNER JOINTS MUST BE LATERALLY RESTRAINED.

1 LATERAL BRACE(S) AT 1/ 2 LENGTH OF D-I.

END VERTICAL(S) MUST BE SHEATHED OR HAVE BRACES AS INDICATED IN THE MAX. UNBRACED LENGTH COLUMN OF THE TABLE BELOW

LOADING

TOTAL LOAD CASES: (4)

CHORDS

MEMB. FR-TO	MAX. FACTORED FORCE (LBS)	FACTORED VERT. LOAD LC1 (PLF) FROM	TO	MAX CSI (LC)	MAX. UNBRAC LENGTH
A- B	-2724 / 0	-78.0	-78.0	0.66 (1)	3.67
B- C	-2090 / 0	-78.0	-78.0	0.46 (1)	4.31
C- D	-2090 / 0	-78.0	-78.0	0.46 (1)	4.31
D- E	-551 / 0	-78.0	-78.0	0.30 (1)	6.25
E- F	-101 / 0	-78.0	-78.0	0.25 (1)	6.25
F- G	0 / 0	-78.0	-78.0	0.00 (1)	10.00
H- G	-24 / 0	0.0	0.0	0.01 (1)	7.81
M- A	-976 / 0	0.0	0.0	0.10 (1)	7.81
M- L	0 / 5	-18.5	-18.5	0.18 (4)	10.00
L- K	0 / 2564	-18.5	-18.5	0.50 (1)	10.00
K- J	0 / 1948	-18.5	-18.5	0.40 (1)	10.00
J- I	0 / 1948	-18.5	-18.5	0.40 (1)	10.00
I- H	0 / 434	-18.5	-18.5	0.08 (1)	10.00

WEBS

MEMB. FR-TO	MAX. FACTORED FORCE (LBS)	MAX CSI (LC)
L- B	-291 / 0	0.05 (1)
B- K	-548 / 0	0.46 (1)
K- D	0 / 324	0.08 (4)
D- I	-1279 / 0	0.39 (1)
I- E	0 / 939	0.21 (1)
E- H	-1220 / 0	0.42 (1)
F- H	0 / 140	0.03 (1)
A- L	0 / 2412	0.54 (1)

DESIGN CRITERIA

SPECIFIED LOADS:

TOP CH.	LL	=	21.0	PSF
	DL	=	6.0	PSF
BOT CH.	LL	=	0.0	PSF
	DL	=	7.4	PSF
TOTAL LOAD		=	34.4	PSF

SPACING = 24.0 IN. C/C

LOADING IN FLAT SECTION BASED ON A SLOPE OF 2.00/12 MINIMUM

THIS TRUSS IS DESIGNED FOR RESIDENTIAL OR SMALL BUILDING REQUIREMENTS OF PART 9, NBCC 2015

THIS DESIGN COMPLIES WITH:
- PART 9 OF BCBC 2018 , ABC 2019
- PART 9 OF OBC 2012 (2019 AMENDMENT)
- CSA 086-14
- TPIC 2014

(55 % OF 23.0 P.S.F. G.S.L. PLUS 8.4 P.S.F. RAIN LOAD) EQUALS 21.0 P.S.F. SPECIFIED ROOF LIVE LOAD

ALLOWABLE DEFL.(LL)= L/360 (0.71")
CALCULATED VERT. DEFL.(LL) = L/ 999 (0.15")
ALLOWABLE DEFL.(TL)= L/360 (0.71")
CALCULATED VERT. DEFL.(TL) = L/ 872 (0.29")

CSI: TC=0.66/1.00 (A-B:1) , BC=0.50/1.00 (K-L:1) , WB=0.54/1.00 (A-L:1) , SSI=0.20/1.00 (A-B:1)

DOL LUMBER=1.00 NAIL=1.00 LS BEND=1.10 COMP=1.10 SHEAR=1.10 TENS= 1.10

COMPANION LIVE LOAD FACTOR = 1.00

TRUSS PLATE MANUFACTURER IS NOT RESPONSIBLE FOR QUALITY CONTROL IN THE TRUSS MANUFACTURING PLANT .

NAIL VALUES

PLATE	GRIP(DRY) (PSI) MAX	MIN	SHEAR (PLI) MAX	MIN	SECTION (PLI) MAX	MIN
MT20	650	371	1747	788	1987	1873

PLATE PLACEMENT TOL. = 0.250 inches

PLATE ROTATION TOL. = 5.0 Deg.

JSI GRIP= 0.86 (L) (INPUT = 0.90)
JSI METAL= 0.60 (L) (INPUT = 1.00)

JOB NAME	TRUSS NAME	QUANTITY	PLY	JOB DESC.	DRWG NO.
343190	H19T		1	TRUSS DESC. JT 45147	E22052723

Alpa Roof Truss, Maple

Version 8.530 S Feb 23 2022 MiTek Industries, Inc. Tue Jun 7 13:30:22 2022 Page 1
ID:MF8iiriaTok7DlbpT4B71Xys4PG-MvfeLbz52NIwkMNh3McYS49ZP?WaCGI39r72viz8gVF

Scale = 1:69.0

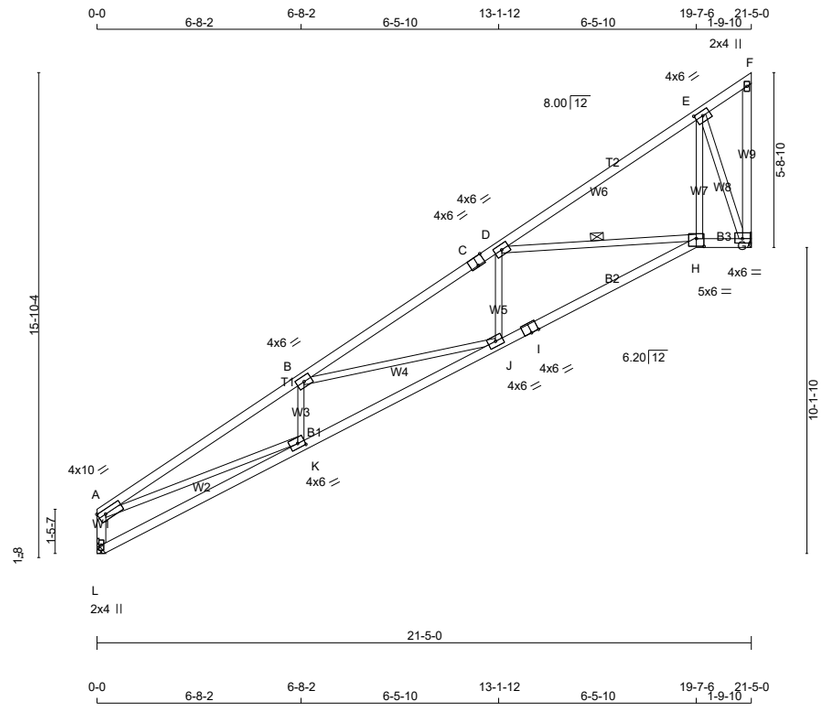

TOTAL WEIGHT = 5 X 91 = 454 lb

LUMBER
N. L. G. A. RULES

CHORDS	SIZE		LUMBER	DESCR.
L - A	2x4	DRY	No.2	SPF
A - C	2x4	DRY	No.2	SPF
C - F	2x4	DRY	No.2	SPF
G - F	2x4	DRY	No.2	SPF
L - I	2x4	DRY	No.2	SPF
I - H	2x4	DRY	No.2	SPF
H - G	2x4	DRY	No.2	SPF
ALL WEBS	2x3	DRY	No.2	SPF

DRY: SEASONED LUMBER.

PLATES (table is in inches)

JT	TYPE	PLATES	W	LEN	Y	X
A	TMVW-t	MT20	4.0	10.0	1.75	Edge
B	TMWW-t	MT20	4.0	6.0		
C	TS-t	MT20	4.0	6.0	Edge	3.00
D	TMWW-t	MT20	4.0	6.0		
E	TMWW-t	MT20	4.0	6.0	1.75	3.00
F	TMV+p	MT20	2.0	4.0		
G	BMVW1-t	MT20	4.0	6.0	1.75	3.00
H	BBWW-l	MT20	5.0	6.0	3.00	3.00
I	BS-t	MT20	4.0	6.0		
J	BMWW-t	MT20	4.0	6.0		
K	BMWW-t	MT20	4.0	6.0	1.75	2.75
L	BMV1+p	MT20	2.0	4.0		

Edge - INDICATES REFERENCE CORNER OF PLATE TOUCHES EDGE OF CHORD.

LATERAL BRACE(S) SHOWN SHALL BE 2X4 SPF#2

LICENSED PROFESSIONAL ENGINEER
V. WIDYA
100225448
06/07/2022
PROVINCE OF ONTARIO

DIMENSIONS, SUPPORTS AND LOADINGS SPECIFIED BY FABRICATOR TO BE VERIFIED BY BUILDING DESIGNER

BEARINGS

JT	FACTORED GROSS REACTION VERT	HORZ	MAXIMUM FACTORED GROSS REACTION DOWN	HORZ	UPLIFT	INPUT BRG	REQRD BRG
L	1033	0	1033	0	0	MECHANICAL	
G	1033	0	1033	0	0	MECHANICAL	

A SUITABLE HANGER/MECHANICAL CONNECTION IS REQUIRED AT JOINT L, G. MINIMUM BEARING LENGTH AT JOINT L = 2-14, JOINT G = 1-8.

VALUE IN PARENTHESIS INDICATES EFFECTIVE BEARING LENGTH

UNFACTORED REACTIONS

JT	1ST LCASE COMBINED	MAX./MIN. COMPONENT REACTIONS SNOW	LIVE	PERM.LIVE	WIND	DEAD	SOIL
L	737	450 / 0	0 / 0	0 / 0	0 / 0	287 / 0	0 / 0
G	737	450 / 0	0 / 0	0 / 0	0 / 0	287 / 0	0 / 0

BRACING
TOP CHORD TO BE SHEATHED OR MAX. PURLIN SPACING = 3.67 FT.
MAX. UNBRACED BOTTOM CHORD LENGTH = 10.00 FT OR RIGID CEILING DIRECTLY APPLIED.

ALL PITCH BREAKS AND PERIMETER CORNER JOINTS MUST BE LATERALLY RESTRAINED.

1 LATERAL BRACE(S) AT 1/ 2 LENGTH OF D-H.

END VERTICAL(S) MUST BE SHEATHED OR HAVE BRACES AS INDICATED IN THE MAX. UNBRACED LENGTH COLUMN OF THE TABLE BELOW

LOADING
TOTAL LOAD CASES: (4)

CHORDS

MEMB. FR-TO	MAX. FACTORED FORCE (LBS)	FACTORED VERT. LOAD LC1 (PLF) FROM	TO	MAX CSI (LC)	MAX. UNBRAC LENGTH
L- A	-976 / 0	0.0	0.0	0.10 (1)	7.81
A- B	-2724 / 0	-78.0	-78.0	0.67 (1)	3.67
B- C	-2091 / 0	-78.0	-78.0	0.46 (1)	4.31
C- D	-2091 / 0	-78.0	-78.0	0.46 (1)	4.31
D- E	-550 / 0	-78.0	-78.0	0.30 (1)	6.25
E- F	-75 / 0	-78.0	-78.0	0.24 (1)	6.25
G- F	0 / 69	0.0	0.0	0.01 (1)	10.00
L- K	0 / 5	-18.5	-18.5	0.18 (4)	10.00
K- J	0 / 2564	-18.5	-18.5	0.50 (1)	10.00
J- I	0 / 1948	-18.5	-18.5	0.41 (1)	10.00
I- H	0 / 1948	-18.5	-18.5	0.41 (1)	10.00
H- G	0 / 432	-18.5	-18.5	0.08 (1)	10.00

WEBS

MEMB. FR-TO	MAX. FACTORED FORCE (LBS)	MAX CSI (LC)
A- K	0 / 2412	0.54 (1)
K- B	-291 / 0	0.05 (1)
B- J	-547 / 0	0.46 (1)
J- D	0 / 324	0.08 (4)
D- H	-1281 / 0	0.40 (1)
H- E	0 / 939	0.21 (1)
E- G	-1170 / 0	0.40 (1)

[M][F]

DESIGN CRITERIA

SPECIFIED LOADS:

TOP CH.	LL	=	21.0	PSF
	DL	=	6.0	PSF
BOT CH.	LL	=	0.0	PSF
	DL	=	7.4	PSF
TOTAL LOAD		=	34.4	PSF

SPACING = 24.0 IN. C/C

THIS TRUSS IS DESIGNED FOR RESIDENTIAL OR SMALL BUILDING REQUIREMENTS OF PART 9, NBCC 2015

THIS DESIGN COMPLIES WITH:
- PART 9 OF BCBC 2018 , ABC 2019
- PART 9 OF OBC 2012 (2019 AMENDMENT)
- CSA 086-14
- TPIC 2014

(55 % OF 23.0 P.S.F. G.S.L. PLUS 8.4 P.S.F. RAIN LOAD) EQUALS 21.0 P.S.F. SPECIFIED ROOF LIVE LOAD

ALLOWABLE DEFL.(LL)= L/360 (0.71")
CALCULATED VERT. DEFL.(LL) = L/ 999 (0.15")
ALLOWABLE DEFL.(TL)= L/360 (0.71")
CALCULATED VERT. DEFL.(TL) = L/ 872 (0.29")

CSI: TC=0.67/1.00 (A-B:1) , BC=0.50/1.00 (J-K:1) , WB=0.54/1.00 (A-K:1) , SSI=0.20/1.00 (A-B:1)

DOL LUMBER=1.00 NAIL=1.00 LS BEND=1.10 COMP=1.10 SHEAR=1.10 TENS= 1.10

COMPANION LIVE LOAD FACTOR = 1.00

TRUSS PLATE MANUFACTURER IS NOT RESPONSIBLE FOR QUALITY CONTROL IN THE TRUSS MANUFACTURING PLANT .

NAIL VALUES

PLATE	GRIP(DRY) (PSI) MAX	MIN	SHEAR (PLI) MAX	MIN	SECTION (PLI) MAX	MIN
MT20	650	371	1747	788	1987	1873

PLATE PLACEMENT TOL. = 0.250 inches

PLATE ROTATION TOL. = 5.0 Deg.

JSI GRIP= 0.86 (K) (INPUT = 0.90)
JSI METAL= 0.60 (K) (INPUT = 1.00)

JOB NAME	TRUSS NAME	QUANTITY	PLY	JOB DESC.	DRWG NO.
343190	H20A		2	TRUSS DESC. JT 45147	E22052724

Alpa Roof Truss, Maple

Version 8.530 S Feb 23 2022 MiTek Industries, Inc. Tue Jun 7 13:30:23 2022 Page 1

ID:MF8iiriaTok7DlbpT4B71Xys4PG-q5C0Yx jphQnMWxud48n?HihNPlvxcxCOVsbR8z8gVE

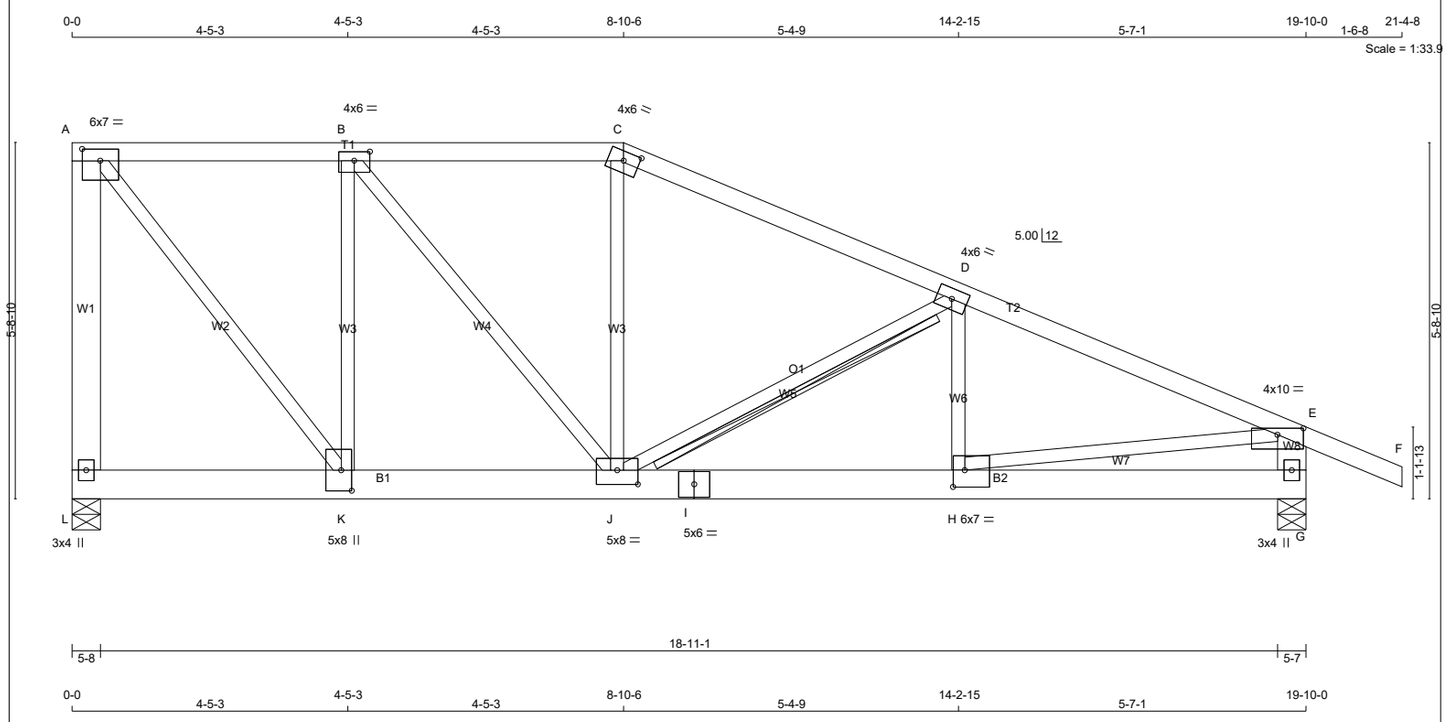

TOTAL WEIGHT = 2 X 101 = 202 lb

[M]

LUMBER

N. L. G. A. RULES

CHORDS	SIZE		LUMBER	DESCR.
L - A	2x6	DRY	No.2	SPF
A - C	2x4	DRY	No.2	SPF
C - F	2x4	DRY	No.2	SPF
G - E	2x6	DRY	No.2	SPF
L - I	2x6	DRY	No.2	SPF
I - G	2x6	DRY	No.2	SPF
ALL WEBS EXCEPT	2x3	DRY	No.2	SPF

DRY: SEASONED LUMBER.

DESIGN CONSISTS OF 2 TRUSSES BUILT SEPARATELY THEN FASTENED TOGETHER AS FOLLOWS:

CHORDS #ROWS	SURFACE SPACING (IN)	LOAD(PLF)
TOP CHORDS : (0.122"X3") SPIRAL NAILS		
L- A 2	12	TOP
G- E 2	12	TOP
A- C 1	12	TOP
C- F 1	12	TOP
BOTTOM CHORDS : (0.122"X3") SPIRAL NAILS		
L- I 2	9	SIDE(234.1)
I- G 2	9	SIDE(234.1)
WEBS : (0.122"X3") SPIRAL NAILS		
2x3 1	6	

NAILS TO BE DRIVEN FROM ONE SIDE ONLY.

TOP - COMPONENTS ARE LOADED FROM THE TOP AND MUST BE PLACED ON TOP EDGE OF ALL PLIES FOR THE LOAD TO BE TRANSFERRED TO EACH PLY.

SIDE - PLF SHOWN IS THE EQUIVALENT UDL APPLIED TO ONE SIDE THAT THE CORRESPONDING NAILING PATTERN SHALL BE CAPABLE OF TRANSFERING. REMAINING PLF MUST BE APPLIED ON THE OPPOSITE SIDE OR ON THE TOP.

PLATES (table is in inches)

JT	TYPE	PLATES	W	LEN	Y	X
A	TMVW-t	MT20	6.0	7.0	2.25	3.50
B	TMWW-t	MT20	4.0	6.0	1.75	3.00
C	TTW-h	MT20	4.0	6.0	1.75	3.00
D	TMWW-t	MT20	4.0	6.0		
E	TMVW-p	MT20	4.0	10.0	1.25	5.00
G	BMV1+p	MT20	3.0	4.0		
H	BMWW-t	MT20	6.0	7.0	3.25	2.25
I	BS-t	MT20	5.0	6.0		
J	BMWWW-t	MT20	5.0	8.0	2.75	4.00
K	BMWW+t	MT20	5.0	8.0	4.00	2.00
L	BMV1+p	MT20	3.0	4.0		

LATERAL BRACE(S) SHOWN SHALL BE 2X4 SPF#2

DIMENSIONS, SUPPORTS AND LOADINGS SPECIFIED BY FABRICATOR TO BE VERIFIED BY BUILDING DESIGNER

BEARINGS

JT	FACTORED GROSS REACTION VERT	HORZ	MAXIMUM FACTORED GROSS REACTION DOWN	HORZ	UPLIFT	INPUT BRG IN-SX	REQRD BRG IN-SX
L	5600	0	5600	0	0	5-8	3-10
G	5725	0	5725	0	0	5-7	3-13

UNFACTORED REACTIONS

JT	1ST LCASE COMBINED	MAX./MIN. COMPONENT REACTIONS SNOW	LIVE	PERM.LIVE	WIND	DEAD	SOIL
L	3993	2437 / 0	0 / 0	0 / 0	0 / 0	1556 / 0	0 / 0
G	4079	2504 / 0	0 / 0	0 / 0	0 / 0	1575 / 0	0 / 0

BEARING MATERIAL TO BE SPF NO.2 OR BETTER AT JOINT(S) L, G

BRACING

TOP CHORD TO BE SHEATHED OR MAX. PURLIN SPACING = 3.08 FT.
MAX. UNBRACED BOTTOM CHORD LENGTH = 10.00 FT OR RIGID CEILING DIRECTLY APPLIED.

ALL PITCH BREAKS AND PERIMETER CORNER JOINTS MUST BE LATERALLY RESTRAINED.

2x4 DRY SPF No.2 T-BRACE AT D-J

FASTEN T AND I-BRACES TO NARROW EDGE OF WEB WITH ONE ROW PER PLY OF 3" COMMON WIRE NAILS @ 6" O.C. WITH 3" MINIMUM END DISTANCE. BRACE MUST COVER 90% OF WEB LENGTH.

END VERTICAL(S) MUST BE SHEATHED OR HAVE BRACES AS INDICATED IN THE MAX. UNBRACED LENGTH COLUMN OF THE TABLE BELOW

LOADING

TOTAL LOAD CASES: (4)

CHORDS

MEMB. FR-TO	MAX. FACTORED FORCE (LBS)	FACTORED VERT. LOAD LC1 (PLF) FROM	TO	MAX CSI (LC)	MAX. UNBRAC LENGTH
L- A	-4705 / 0	0.0	0.0	0.84 (1)	6.67
A- B	-3784 / 0	-78.0	-78.0	0.16 (1)	4.72
B- C	-5291 / 0	-78.0	-78.0	0.22 (1)	4.05
C- D	-5708 / 0	-78.0	-78.0	0.34 (1)	3.85
D- E	-8353 / 0	-78.0	-78.0	0.58 (1)	3.08
E- F	0 / 24	-78.0	-78.0	0.08 (1)	10.00
G- E	-4582 / 0	0.0	0.0	0.16 (1)	6.74
L- K	0 / 0	-486.8	-486.8	0.30 (1)	10.00
K- J	0 / 3784	-486.8	-486.8	0.57 (1)	10.00
J- I	0 / 7723	-486.8	-486.8	0.95 (1)	10.00
I- H	0 / 7723	-486.8	-486.8	0.95 (1)	10.00
H- G	0 / 0	-486.8	-486.8	0.49 (1)	10.00

WEBS

MEMB. FR-TO	MAX. FACTORED FORCE (LBS)	MAX CSI (LC)
A- K	0 / 5928	0.73 (1)
B- K	-2261 / 0	0.54 (1)
B- J	0 / 2393	0.30 (1)
J- C	0 / 1873	0.23 (1)
J- D	-2834 / 0	0.54 (1)
H- D	0 / 1917	0.24 (1)
H- E	0 / 7794	0.96 (1)

DESIGN CRITERIA

SPECIFIED LOADS:

TOP CH.	LL	=	21.0	PSF
	DL	=	6.0	PSF
BOT CH.	LL	=	0.0	PSF
	DL	=	7.4	PSF
TOTAL LOAD		=	34.4	PSF

SPACING = 24.0 IN. C/C

LOADING IN FLAT SECTION BASED ON A SLOPE OF 2.00/12 MINIMUM

GIRDER TYPE: CStdGirder
START DISTANCE = 0-0
START SPAN CARRIED = 21-5-0
END DISTANCE = 19-10-0
END SPAN CARRIED = 21-5-0
END WALL WIDTH = 0-0
APPLIED TO FRONT SIDE OF BOTTOM CHORD.
- ADDT'L LOADS BASED ON 55 % OF GSL.

THIS TRUSS IS DESIGNED FOR RESIDENTIAL OR SMALL BUILDING REQUIREMENTS OF PART 9, NBCC 2015

THIS DESIGN COMPLIES WITH:
- PART 9 OF BCBC 2018 , ABC 2019
- PART 9 OF OBC 2012 (2019 AMENDMENT)
- CSA 086-14
- TPIC 2014

(55 % OF 23.0 P.S.F. G.S.L. PLUS 8.4 P.S.F. RAIN LOAD) EQUALS 21.0 P.S.F. SPECIFIED ROOF LIVE LOAD

ALLOWABLE DEFL.(LL)= L/360 (0.66")
CALCULATED VERT. DEFL.(LL) = L/ 999 (0.12")
ALLOWABLE DEFL.(TL)= L/360 (0.66")
CALCULATED VERT. DEFL.(TL) = L/ 973 (0.24")

CSI: TC=0.84/1.00 (A-L:1) , BC=0.95/1.00 (H-J:1) , WB=0.96/1.00 (E-H:1) , SSI=0.52/1.00 (G-H:1)

DOL LUMBER=1.00 NAIL=1.00 LS BEND=1.00 COMP=1.00 SHEAR=1.00 TENS= 1.00

COMPANION LIVE LOAD FACTOR = 1.00

AUTOSOLVE LEFT HEEL ONLY

TRUSS PLATE MANUFACTURER IS NOT RESPONSIBLE FOR QUALITY CONTROL IN THE TRUSS MANUFACTURING PLANT .

NAIL VALUES

PLATE	GRIP(DRY) (PSI) MAX	MIN	SHEAR (PLI) MAX	MIN	SECTION (PLI) MAX	MIN
MT20	650	371	1747	788	1987	1873

PLATE PLACEMENT TOL. = 0.250 inches

PLATE ROTATION TOL. = 5.0 Deg.

JSI GRIP= 0.90 (K) (INPUT = 0.90)
JSI METAL= 0.81 (I) (INPUT = 1.00)

JOB NAME	TRUSS NAME	QUANTITY	PLY	JOB DESC.	DRWG NO.
343190	H21		1	TRUSS DESC. JT 45147	E22052725

Alpa Roof Truss, Maple

Version 8.530 S Feb 23 2022 MiTek Industries, Inc. Tue Jun 7 13:30:25 2022 Page 1
ID:MF8iiriaTok7DlbpT4B71Xys4PG-mUKnzc0zKIgVbp5GkVAF4in0UCZfObiVrpLiV1z8gVC

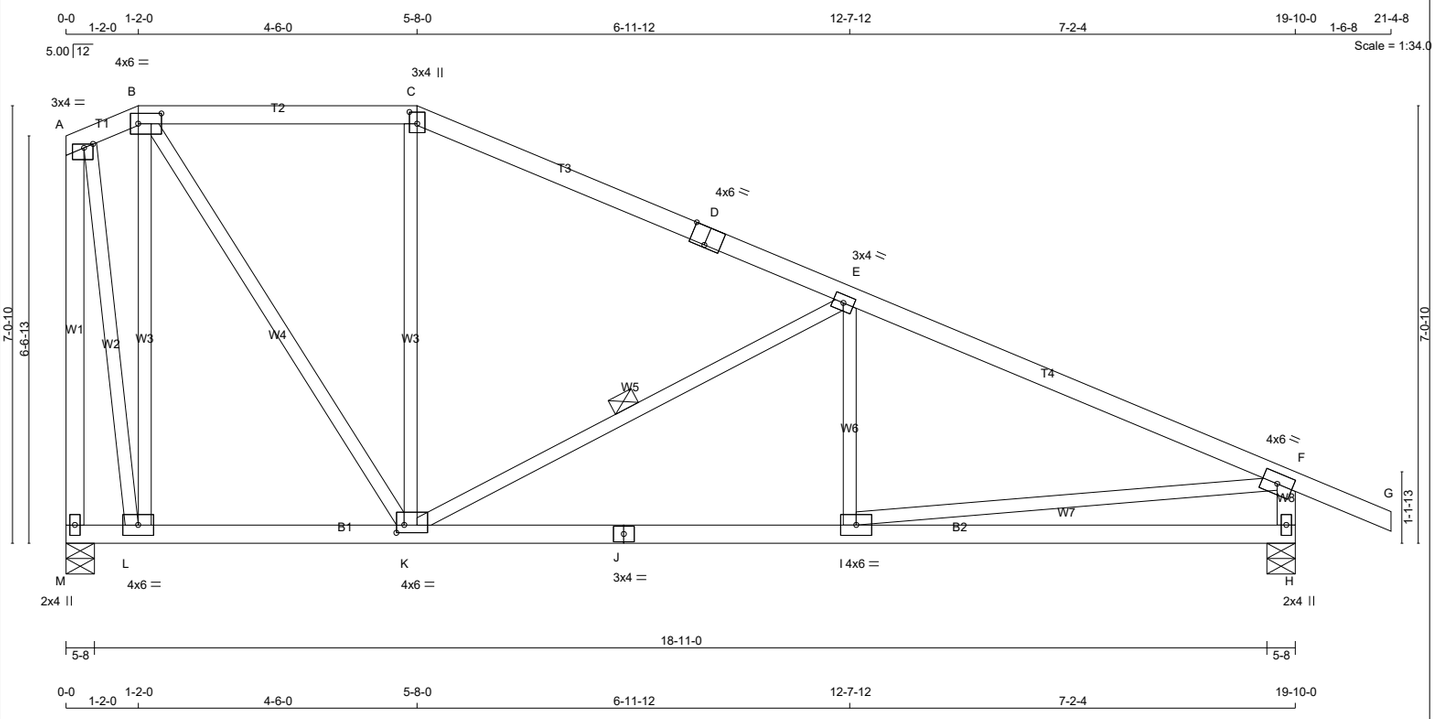

TOTAL WEIGHT = 93 lb

LUMBER
N. L. G. A. RULES

CHORDS	SIZE		LUMBER	DESCR.
A - B	2x4	DRY	No.2	SPF
B - C	2x4	DRY	No.2	SPF
C - D	2x4	DRY	No.2	SPF
D - G	2x4	DRY	No.2	SPF
M - A	2x4	DRY	No.2	SPF
H - F	2x4	DRY	No.2	SPF
M - J	2x4	DRY	No.2	SPF
J - H	2x4	DRY	No.2	SPF
ALL WEBS EXCEPT	2x3	DRY	No.2	SPF

DRY: SEASONED LUMBER.

PLATES (table is in inches)

JT	TYPE	PLATES	W	LEN	Y	X
A	TMVW-p	MT20	3.0	4.0	Edge	1.75
B	TTWW-l	MT20	4.0	6.0	2.00	4.50
C	TTW+p	MT20	3.0	4.0	2.25	1.50
D	TS-t	MT20	4.0	6.0	Edge	3.00
E	TMWW-t	MT20	3.0	4.0		
F	TMVW-t	MT20	4.0	6.0		
H	BMV1+p	MT20	2.0	4.0		
I	BMWW-t	MT20	4.0	6.0		
J	BS-t	MT20	3.0	4.0		
K	BMWWW-t	MT20	4.0	6.0	1.50	1.50
L	BMWW-t	MT20	4.0	6.0		
M	BMV1+p	MT20	2.0	4.0		

Edge - INDICATES REFERENCE CORNER OF PLATE TOUCHES EDGE OF CHORD.

LATERAL BRACE(S) SHOWN SHALL BE 2X4 SPF#2

DIMENSIONS, SUPPORTS AND LOADINGS SPECIFIED BY FABRICATOR TO BE VERIFIED BY BUILDING DESIGNER

BEARINGS

JT	FACTORED GROSS REACTION VERT	HORZ	MAXIMUM FACTORED GROSS REACTION DOWN	HORZ	UPLIFT	INPUT BRG IN-SX	REQRD BRG IN-SX
M	957	0	957	0	0	5-8	1-8
H	1081	0	1081	0	0	5-8	1-8

UNFACTORED REACTIONS

JT	1ST LCASE COMBINED	MAX./MIN. COMPONENT REACTIONS SNOW	LIVE	PERM.LIVE	WIND	DEAD	SOIL
M	682	416 / 0	0 / 0	0 / 0	0 / 0	266 / 0	0 / 0
H	768	483 / 0	0 / 0	0 / 0	0 / 0	285 / 0	0 / 0

BEARING MATERIAL TO BE SPF NO.2 OR BETTER AT JOINT(S) M, H

BRACING
TOP CHORD TO BE SHEATHED OR MAX. PURLIN SPACING = 4.82 FT.
MAX. UNBRACED BOTTOM CHORD LENGTH = 10.00 FT OR RIGID CEILING DIRECTLY APPLIED.

ALL PITCH BREAKS AND PERIMETER CORNER JOINTS MUST BE LATERALLY RESTRAINED.

1 LATERAL BRACE(S) AT 1/ 2 LENGTH OF E-K.

END VERTICAL(S) MUST BE SHEATHED OR HAVE BRACES AS INDICATED IN THE MAX. UNBRACED LENGTH COLUMN OF THE TABLE BELOW

LOADING
TOTAL LOAD CASES: (4)

CHORDS MEMB. FR-TO	MAX. FACTORED FORCE (LBS)	FACTORED VERT. LOAD (PLF) FROM	TO	LC1 MAX CSI (LC)	MAX. UNBRAC LENGTH	WEBS MEMB. FR-TO	MAX. FACTORED FORCE (LBS)	MAX CSI (LC)
A- B	-155 / 0	-78.0	-78.0	0.01 (1)	6.25	L- B	-806 / 0	0.69 (1)
B- C	-573 / 0	-78.0	-78.0	0.21 (1)	6.25	B- K	0 / 770	0.17 (1)
C- D	-649 / 0	-78.0	-78.0	0.51 (1)	6.25	K- C	-139 / 13	0.12 (1)
D- E	-649 / 0	-78.0	-78.0	0.51 (1)	6.25	K- E	-810 / 0	0.36 (1)
E- F	-1369 / 0	-78.0	-78.0	0.57 (1)	4.82	I- E	-4 / 111	0.04 (4)
F- G	0 / 24	-78.0	-78.0	0.14 (1)	10.00	A- L	0 / 839	0.19 (1)
M- A	-933 / 0	0.0	0.0	0.87 (1)	7.81	I- F	0 / 1296	0.29 (1)
H- F	-1027 / 0	0.0	0.0	0.10 (1)	7.74			
M- L	0 / 0	-18.5	-18.5	0.02 (1)	10.00			
L- K	0 / 153	-18.5	-18.5	0.15 (4)	10.00			
K- J	0 / 1287	-18.5	-18.5	0.35 (4)	10.00			
J- I	0 / 1287	-18.5	-18.5	0.35 (4)	10.00			
I- H	0 / 0	-18.5	-18.5	0.23 (4)	10.00			

[M][F]

DESIGN CRITERIA

SPECIFIED LOADS:

TOP CH.	LL	=	21.0	PSF
	DL	=	6.0	PSF
BOT CH.	LL	=	0.0	PSF
	DL	=	7.4	PSF
TOTAL LOAD		=	34.4	PSF

SPACING = 24.0 IN. C/C

LOADING IN FLAT SECTION BASED ON A SLOPE OF 2.00/12 MINIMUM

THIS TRUSS IS DESIGNED FOR RESIDENTIAL OR SMALL BUILDING REQUIREMENTS OF PART 9, NBCC 2015

THIS DESIGN COMPLIES WITH:
- PART 9 OF BCBC 2018 , ABC 2019
- PART 9 OF OBC 2012 (2019 AMENDMENT)
- CSA 086-14
- TPIC 2014

(55 % OF 23.0 P.S.F. G.S.L. PLUS 8.4 P.S.F. RAIN LOAD) EQUALS 21.0 P.S.F. SPECIFIED ROOF LIVE LOAD

ALLOWABLE DEFL.(LL)= L/360 (0.66")
CALCULATED VERT. DEFL.(LL) = L/ 999 (0.05")
ALLOWABLE DEFL.(TL)= L/360 (0.66")
CALCULATED VERT. DEFL.(TL) = L/ 999 (0.12")

CSI: TC=0.87/1.00 (A-M:1) , BC=0.35/1.00 (I-K:4) , WB=0.69/1.00 (B-L:1) , SSI=0.25/1.00 (E-F:1)

DOL LUMBER=1.00 NAIL=1.00 LS BEND=1.10 COMP=1.10 SHEAR=1.10 TENS= 1.10

COMPANION LIVE LOAD FACTOR = 1.00

TRUSS PLATE MANUFACTURER IS NOT RESPONSIBLE FOR QUALITY CONTROL IN THE TRUSS MANUFACTURING PLANT .

NAIL VALUES

PLATE	GRIP(DRY) (PSI) MAX	MIN	SHEAR (PLI) MAX	MIN	SECTION (PLI) MAX	MIN
MT20	650	371	1747	788	1987	1873

PLATE PLACEMENT TOL. = 0.250 inches

PLATE ROTATION TOL. = 5.0 Deg.

JSI GRIP= 0.86 (J) (INPUT = 0.90)
JSI METAL= 0.48 (J) (INPUT = 1.00)

JOB NAME	TRUSS NAME	QUANTITY	PLY	JOB DESC.	DRWG NO.
343190	H22		1	TRUSS DESC. JT 45147	E22052726

Alpha Roof Truss, Maple

Version 8.530 S Feb 23 2022 MiTek Industries, Inc. Tue Jun 7 13:30:27 2022 Page 1
ID:MF8iiriaTok7DlbpT4B71Xys4PG-jtSXOI1EswwDq7FfswCj97sUB0CMsTdoI7qpavz8gVA

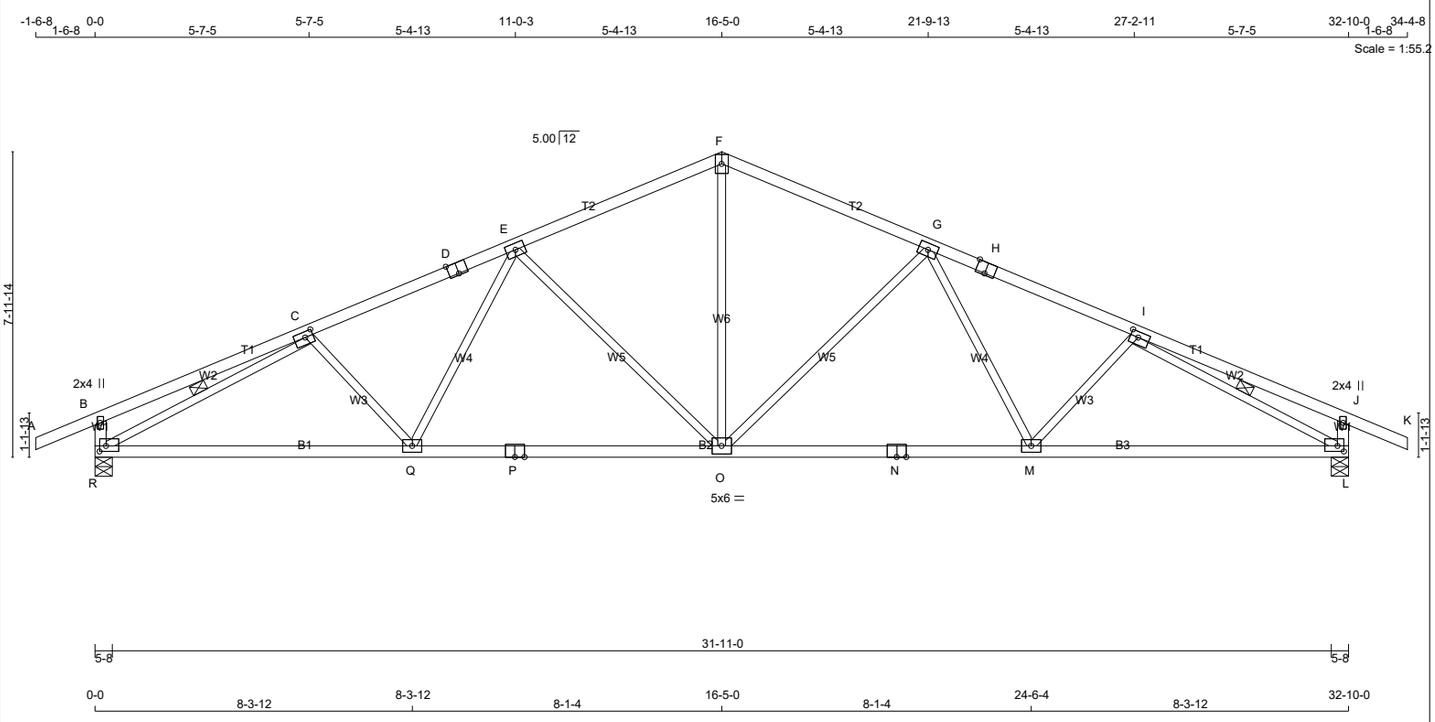

TOTAL WEIGHT = 7 X 127 = 891 lb

[M][F]

LUMBER

N. L. G. A. RULES

CHORDS	SIZE		LUMBER	DESCR.
A - D	2x4	DRY	No.2	SPF
D - F	2x4	DRY	No.2	SPF
F - H	2x4	DRY	No.2	SPF
H - K	2x4	DRY	No.2	SPF
R - B	2x4	DRY	No.2	SPF
L - J	2x4	DRY	No.2	SPF
R - P	2x4	DRY	No.2	SPF
P - N	2x4	DRY	No.2	SPF
N - L	2x4	DRY	No.2	SPF
ALL WEBS EXCEPT	2x3	DRY	No.2	SPF

DRY: SEASONED LUMBER.

PLATES (table is in inches)

JT	TYPE	PLATES	W	LEN	Y	X
B	TMV+p	MT20	2.0	4.0		
C	TMWW-t	MT20	4.0	6.0	1.75	2.50
D	TS-t	MT20	4.0	6.0	Edge	3.00
E	TMWW-t	MT20	4.0	6.0		
F	TTW+p	MT20	4.0	6.0		
G	TMWW-t	MT20	4.0	6.0		
H	TS-t	MT20	4.0	6.0	Edge	3.00
I	TMWW-t	MT20	4.0	6.0	1.75	2.50
J	TMV+p	MT20	2.0	4.0		
L	BMVW1-t	MT20	4.0	6.0	1.75	2.00
M	BMWW-t	MT20	4.0	6.0		
N	BS-t	MT20	4.0	6.0		
O	BMWWW-t	MT20	5.0	6.0		
P	BS-t	MT20	4.0	6.0		
Q	BMWW-t	MT20	4.0	6.0		
R	BMVW1-t	MT20	4.0	6.0	1.75	2.00

Edge - INDICATES REFERENCE CORNER OF PLATE TOUCHES EDGE OF CHORD.

LATERAL BRACE(S) SHOWN SHALL BE 2X4 SPF#2

DIMENSIONS, SUPPORTS AND LOADINGS SPECIFIED BY FABRICATOR TO BE VERIFIED BY BUILDING DESIGNER

BEARINGS

JT	FACTORED GROSS REACTION VERT	HORZ	MAXIMUM FACTORED GROSS REACTION DOWN	HORZ	UPLIFT	INPUT BRG IN-SX	REQRD BRG IN-SX
R	1708	0	1708	0	0	5-8	1-14
L	1708	0	1708	0	0	5-8	1-14

UNFACTORED REACTIONS

JT	1ST LCASE COMBINED	MAX./MIN. COMPONENT REACTIONS SNOW	LIVE	PERM.LIVE	WIND	DEAD	SOIL
R	1215	756 / 0	0 / 0	0 / 0	0 / 0	459 / 0	0 / 0
L	1215	756 / 0	0 / 0	0 / 0	0 / 0	459 / 0	0 / 0

BEARING MATERIAL TO BE SPF NO.2 OR BETTER AT JOINT(S) R, L

BRACING

TOP CHORD TO BE SHEATHED OR MAX. PURLIN SPACING = 4.10 FT.
MAX. UNBRACED BOTTOM CHORD LENGTH = 10.00 FT OR RIGID CEILING DIRECTLY APPLIED.

ALL PITCH BREAKS AND PERIMETER CORNER JOINTS MUST BE LATERALLY RESTRAINED.

1 LATERAL BRACE(S) AT 1/ 2 LENGTH OF C-R, I-L.

END VERTICAL(S) MUST BE SHEATHED OR HAVE BRACES AS INDICATED IN THE MAX. UNBRACED LENGTH COLUMN OF THE TABLE BELOW

LOADING

TOTAL LOAD CASES: (4)

CHORDS

MEMB. FR-TO	MAX. FACTORED FORCE (LBS)	FACTORED VERT. LOAD (PLF) FROM	TO	LC1	MAX CSI (LC)	MAX. UNBRAC LENGTH
A- B	0 / 24	-78.0	-78.0	0.14 (1)	10.00	
B- C	0 / 14	-78.0	-78.0	0.28 (1)	10.00	
C- D	-2478 / 0	-78.0	-78.0	0.34 (1)	4.10	
D- E	-2478 / 0	-78.0	-78.0	0.34 (1)	4.10	
E- F	-1860 / 0	-78.0	-78.0	0.31 (1)	4.63	
F- G	-1860 / 0	-78.0	-78.0	0.31 (1)	4.63	
G- H	-2478 / 0	-78.0	-78.0	0.34 (1)	4.10	
H- I	-2478 / 0	-78.0	-78.0	0.34 (1)	4.10	
I- J	0 / 14	-78.0	-78.0	0.28 (1)	10.00	
J- K	0 / 24	-78.0	-78.0	0.14 (1)	10.00	
R- B	-303 / 0	0.0	0.0	0.03 (1)	7.81	
L- J	-303 / 0	0.0	0.0	0.03 (1)	7.81	
R- Q	0 / 2355	-18.5	-18.5	0.53 (1)	10.00	
Q- P	0 / 2167	-18.5	-18.5	0.50 (4)	10.00	
P- O	0 / 2167	-18.5	-18.5	0.50 (4)	10.00	
O- N	0 / 2167	-18.5	-18.5	0.50 (4)	10.00	
N- M	0 / 2167	-18.5	-18.5	0.50 (4)	10.00	
M- L	0 / 2355	-18.5	-18.5	0.53 (1)	10.00	

WEBS

MEMB. FR-TO	FORCE (LBS)	MAX CSI (LC)
O- F	0 / 1080	0.24 (1)
O- G	-659 / 0	0.79 (1)
G- M	0 / 271	0.06 (4)
M- I	-101 / 37	0.03 (1)
E- O	-659 / 0	0.79 (1)
Q- E	0 / 271	0.06 (4)
C- Q	-101 / 37	0.03 (1)
R- C	-2710 / 0	0.76 (1)
I- L	-2710 / 0	0.76 (1)

DESIGN CRITERIA

SPECIFIED LOADS:

TOP CH.	LL	=	21.0	PSF
	DL	=	6.0	PSF
BOT CH.	LL	=	0.0	PSF
	DL	=	7.4	PSF
TOTAL LOAD		=	34.4	PSF

SPACING = 24.0 IN. C/C

THIS TRUSS IS DESIGNED FOR RESIDENTIAL OR SMALL BUILDING REQUIREMENTS OF PART 9, NBCC 2015

THIS DESIGN COMPLIES WITH:
- PART 9 OF BCBC 2018 , ABC 2019
- PART 9 OF OBC 2012 (2019 AMENDMENT)
- CSA 086-14
- TPIC 2014

(55 % OF 23.0 P.S.F. G.S.L. PLUS 8.4 P.S.F. RAIN LOAD) EQUALS 21.0 P.S.F. SPECIFIED ROOF LIVE LOAD

ALLOWABLE DEFL.(LL)= L/360 (1.09")
CALCULATED VERT. DEFL.(LL) = L/ 999 (0.13")
ALLOWABLE DEFL.(TL)= L/360 (1.09")
CALCULATED VERT. DEFL.(TL) = L/ 999 (0.29")

CSI: TC=0.34/1.00 (C-E:1) , BC=0.53/1.00 (Q-R:1) , WB=0.79/1.00 (E-O:1) , SSI=0.18/1.00 (I-J:1)

DOL LUMBER=1.00 NAIL=1.00 LS BEND=1.10 COMP=1.10 SHEAR=1.10 TENS= 1.10

COMPANION LIVE LOAD FACTOR = 1.00

TRUSS PLATE MANUFACTURER IS NOT RESPONSIBLE FOR QUALITY CONTROL IN THE TRUSS MANUFACTURING PLANT .

NAIL VALUES

PLATE	GRIP(DRY) (PSI) MAX	MIN	SHEAR (PLI) MAX	MIN	SECTION (PLI) MAX	MIN
MT20	650	371	1747	788	1987	1873

PLATE PLACEMENT TOL. = 0.250 inches

PLATE ROTATION TOL. = 5.0 Deg.

JSI GRIP= 0.89 (L) (INPUT = 0.90)
JSI METAL= 0.63 (I) (INPUT = 1.00)

JOB NAME	TRUSS NAME	QUANTITY	PLY	JOB DESC.	DRWG NO.
343190	H23		1	TRUSS DESC. JT 45147	E22052727

Alpa Roof Truss, Maple

Version 8.530 S Feb 23 2022 MiTek Industries, Inc. Tue Jun 7 13:30:29 2022 Page 1

ID:MF8iiriaTok7DlbpT4B71Xys4PG-fFaHp 3UOXAx4RP1zKECEYyiaqqSKPn5mRJweoz8qV8

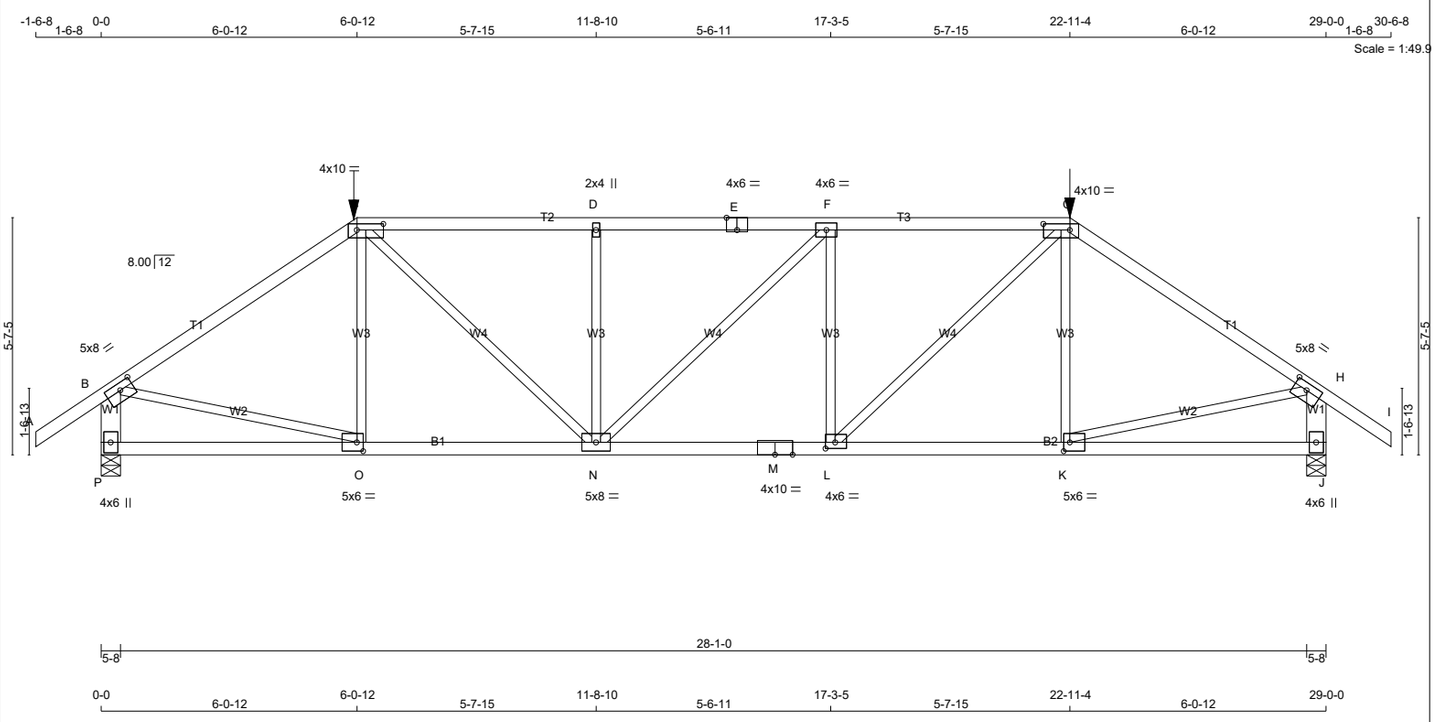

TOTAL WEIGHT = 122 lb

LUMBER

N. L. G. A. RULES

CHORDS	SIZE		LUMBER	DESCR.
A - C	2x4	DRY	1650F 1.5E	SPF
C - E	2x4	DRY	1650F 1.5E	SPF
E - G	2x4	DRY	1650F 1.5E	SPF
G - I	2x4	DRY	1650F 1.5E	SPF
P - B	2x6	DRY	No.2	SPF
J - H	2x6	DRY	No.2	SPF
P - M	2x4	DRY	No.2	SPF
M - J	2x4	DRY	No.2	SPF
ALL WEBS EXCEPT	2x3	DRY	No.2	SPF

DRY: SEASONED LUMBER.

PLATES (table is in inches)

JT	TYPE	PLATES	W	LEN	Y	X
B	TMVW-t	MT20	5.0	8.0	2.00	3.75
C	TTWW-l	MT20	4.0	10.0	1.75	7.50
D	TMW+w	MT20	2.0	4.0		
E	TS-t	MT20	4.0	6.0	Edge	3.00
F	TMWW-t	MT20	4.0	6.0		
G	TTWW-l	MT20	4.0	10.0	1.75	7.50
H	TMVW-t	MT20	5.0	8.0	2.00	3.75
J	BMV1+p	MT20	4.0	6.0		
K	BMWW-t	MT20	5.0	6.0	2.50	1.75
L	BMWW-t	MT20	4.0	6.0	1.75	2.75
M	BS-t	MT20	4.0	10.0		
N	BMWWW-t	MT20	5.0	8.0		
O	BMWW-t	MT20	5.0	6.0	2.50	1.75
P	BMV1+p	MT20	4.0	6.0		

Edge - INDICATES REFERENCE CORNER OF PLATE TOUCHES EDGE OF CHORD.

LATERAL BRACE(S) SHOWN SHALL BE 2X4 SPF#2

DIMENSIONS, SUPPORTS AND LOADINGS SPECIFIED BY FABRICATOR TO BE VERIFIED BY BUILDING DESIGNER

BEARINGS

JT	FACTORED GROSS REACTION VERT	HORZ	MAXIMUM FACTORED GROSS REACTION DOWN	HORZ	UPLIFT	INPUT BRG IN-SX	REQRD BRG IN-SX
P	2826	0	2826	0	0	5-8	3-11
J	2825	0	2825	0	0	5-8	3-11

UNFACTORED REACTIONS

JT	1ST LCASE COMBINED	SNOW	MAX./MIN. COMPONENT REACTIONS LIVE	PERM.LIVE	WIND	DEAD	SOIL
P	2014	1230 / 0	0 / 0	0 / 0	0 / 0	784 / 0	0 / 0
J	2014	1230 / 0	0 / 0	0 / 0	0 / 0	784 / 0	0 / 0

BEARING MATERIAL TO BE SPF NO.2 OR BETTER AT JOINT(S) P, J

BRACING

TOP CHORD TO BE SHEATHED OR MAX. PURLIN SPACING = 3.06 FT.
MAX. UNBRACED BOTTOM CHORD LENGTH = 10.00 FT OR RIGID CEILING DIRECTLY APPLIED.

ALL PITCH BREAKS AND PERIMETER CORNER JOINTS MUST BE LATERALLY RESTRAINED.

LOADING

TOTAL LOAD CASES: (4)

CHORDS

MEMB. FR-TO	MAX. FACTORED FORCE (LBS)	FACTORED VERT. LOAD (PLF) FROM	TO	LC1	MAX CSI (LC)	MAX. UNBRAC LENGTH
A- B	0 / 35	-78.0	-78.0	0.13 (1)	10.00	
B- C	-3271 / 0	-78.0	-78.0	0.74 (1)	3.74	
C- D	-3939 / 0	-157.2	-157.2	0.85 (1)	3.08	
D- E	-3940 / 0	-157.2	-157.2	0.85 (1)	3.06	
E- F	-3940 / 0	-157.2	-157.2	0.85 (1)	3.06	
F- G	-3942 / 0	-157.2	-157.2	0.86 (1)	3.06	
G- H	-3271 / 0	-78.0	-78.0	0.74 (1)	3.73	
H- I	0 / 35	-78.0	-78.0	0.13 (1)	10.00	
P- B	-2732 / 0	0.0	0.0	0.20 (1)	6.27	
J- H	-2732 / 0	0.0	0.0	0.20 (1)	6.27	
P- O	0 / 0	-37.3	-37.3	0.35 (4)	10.00	
O- N	0 / 2712	-37.3	-37.3	0.68 (1)	10.00	
N- M	0 / 3942	-37.3	-37.3	0.81 (1)	10.00	
M- L	0 / 3942	-37.3	-37.3	0.81 (1)	10.00	
L- K	0 / 2713	-37.3	-37.3	0.68 (1)	10.00	
K- J	0 / 0	-37.3	-37.3	0.35 (4)	10.00	

WEBS

MEMB. FR-TO	MAX. FACTORED FORCE (LBS)	MAX CSI (LC)
O- C	-299 / 68	0.15 (1)
N- D	-953 / 0	0.47 (1)
N- F	-3 / 0	0.00 (1)
L- F	-954 / 0	0.47 (1)
L- G	0 / 1684	0.42 (1)
K- G	-299 / 68	0.15 (1)
B- O	0 / 2774	0.69 (1)
K- H	0 / 2774	0.69 (1)

FACTORED CONCENTRATED LOADS (LBS)

JT	LOC.	LC1	MAX-	MAX+	FACE	DIR.	TYPE	HEEL	CONN.
C	6-0-12	-359	-359	---	FRONT	VERT	TOTAL	---	C1
G	22-11-4	-359	-359	---	FRONT	VERT	TOTAL	---	C1

CONNECTION REQUIREMENTS

1) **C1:** A SUITABLE HANGER/MECHANICAL CONNECTION IS REQUIRED.

[M]

DESIGN CRITERIA

SPECIFIED LOADS:

TOP CH.	LL	=	21.0	PSF
	DL	=	6.0	PSF
BOT CH.	LL	=	0.0	PSF
	DL	=	7.4	PSF
TOTAL LOAD		=	34.4	PSF

SPACING = 24.0 IN. C/C

LOADING IN FLAT SECTION BASED ON A SLOPE OF 2.00/12 MINIMUM

GIRDER TYPE: CPrimeHip
SIDE SETBACK = 6-0-12
END SETBACK = 6-0-12
END WALL WIDTH = 0-0
CORNER FRAMING TYPE: CONVENTIONAL
END JACK TYPE: CONVENTIONAL
APPLIED TO FRONT SIDE
- ADDT'L LOADS BASED ON 55 % OF GSL.

THIS TRUSS IS DESIGNED FOR RESIDENTIAL OR SMALL BUILDING REQUIREMENTS OF PART 9, NBCC 2015

THIS DESIGN COMPLIES WITH:
- PART 9 OF BCBC 2018 , ABC 2019
- PART 9 OF OBC 2012 (2019 AMENDMENT)
- CSA 086-14
- TPIC 2014

(55 % OF 23.0 P.S.F. G.S.L. PLUS 8.4 P.S.F. RAIN LOAD) EQUALS 21.0 P.S.F. SPECIFIED ROOF LIVE LOAD

ALLOWABLE DEFL.(LL)= L/360 (0.97")
CALCULATED VERT. DEFL.(LL) = L/ 999 (0.15")
ALLOWABLE DEFL.(TL)= L/360 (0.97")
CALCULATED VERT. DEFL.(TL) = L/ 999 (0.32")

CSI: TC=0.86/1.00 (F-G:1) , BC=0.81/1.00 (L-N:1) , WB=0.69/1.00 (H-K:1) , SSI=0.45/1.00 (F-G:1)

DOL LUMBER=1.00 NAIL=1.00 LS BEND=1.00 COMP=1.00 SHEAR=1.00 TENS= 1.00

COMPANION LIVE LOAD FACTOR = 1.00

AUTOSOLVE HEELS OFF

TRUSS PLATE MANUFACTURER IS NOT RESPONSIBLE FOR QUALITY CONTROL IN THE TRUSS MANUFACTURING PLANT .

NAIL VALUES

PLATE	GRIP(DRY) (PSI) MAX	MIN	SHEAR (PLI) MAX	MIN	SECTION (PLI) MAX	MIN
MT20	650	371	1747	788	1987	1873

PLATE PLACEMENT TOL. = 0.250 inches

PLATE ROTATION TOL. = 5.0 Deg.

JSI GRIP= 0.90 (O) (INPUT = 0.90)
JSI METAL= 0.88 (M) (INPUT = 1.00)

JOB NAME	TRUSS NAME	QUANTITY	PLY	JOB DESC.	DRWG NO.
343190	H24	1	1	TRUSS DESC. JT 45147	E22052728

Alpha Roof Truss, Maple

Version 8.530 S Feb 23 2022 MiTek Industries, Inc. Tue Jun 7 13:30:30 2022 Page 1

ID:MF8iiriaTok7DlbpT4B71Xys4PG-7S8q0K469rIohb EX2mRnmUzdDG63oeE?53TBEz8gV7

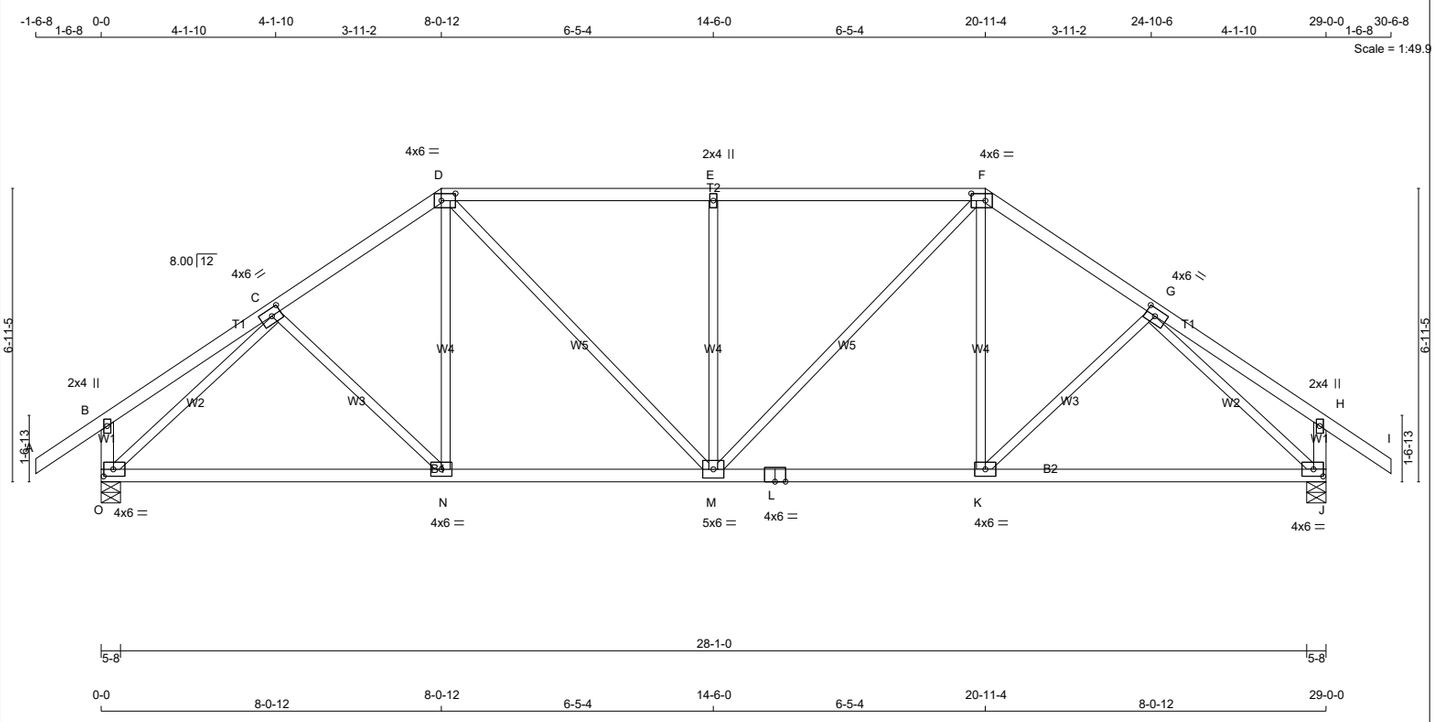

TOTAL WEIGHT = 2 X 124 = 249 lb

[M][F]

LUMBER

N. L. G. A. RULES

CHORDS	SIZE		LUMBER	DESCR.
A - D	2x4	DRY	No.2	SPF
D - F	2x4	DRY	No.2	SPF
F - I	2x4	DRY	No.2	SPF
O - B	2x4	DRY	No.2	SPF
J - H	2x4	DRY	No.2	SPF
O - L	2x4	DRY	No.2	SPF
L - J	2x4	DRY	No.2	SPF
ALL WEBS EXCEPT	2x3	DRY	No.2	SPF

DRY: SEASONED LUMBER.

PLATES (table is in inches)

JT	TYPE	PLATES	W	LEN	Y	X
B	TMV+p	MT20	2.0	4.0		
C	TMWW-t	MT20	4.0	6.0	2.00	2.75
D	TTWW-l	MT20	4.0	6.0	2.00	4.00
E	TMW+w	MT20	2.0	4.0		
F	TTWW-l	MT20	4.0	6.0	2.00	4.00
G	TMWW-t	MT20	4.0	6.0	2.00	2.75
H	TMV+p	MT20	2.0	4.0		
J	BMVW1-t	MT20	4.0	6.0	2.00	2.75
K	BMWW-t	MT20	4.0	6.0		
L	BS-t	MT20	4.0	6.0		
M	BMWWW-t	MT20	5.0	6.0		
N	BMWW-t	MT20	4.0	6.0		
O	BMVW1-t	MT20	4.0	6.0	2.00	2.75

LATERAL BRACE(S) SHOWN SHALL BE 2X4 SPF#2

DIMENSIONS, SUPPORTS AND LOADINGS SPECIFIED BY FABRICATOR TO BE VERIFIED BY BUILDING DESIGNER

BEARINGS

JT	FACTORED GROSS REACTION VERT	HORZ	MAXIMUM FACTORED GROSS REACTION DOWN	HORZ	UPLIFT	INPUT BRG IN-SX	REQRD BRG IN-SX
O	1525	0	1525	0	0	5-8	1-10
J	1525	0	1525	0	0	5-8	1-10

UNFACTORED REACTIONS

JT	1ST LCASE COMBINED	MAX./MIN. COMPONENT REACTIONS SNOW	LIVE	PERM.LIVE	WIND	DEAD	SOIL
O	1085	677 / 0	0 / 0	0 / 0	0 / 0	408 / 0	0 / 0
J	1085	677 / 0	0 / 0	0 / 0	0 / 0	408 / 0	0 / 0

BEARING MATERIAL TO BE SPF NO.2 OR BETTER AT JOINT(S) O, J

BRACING

TOP CHORD TO BE SHEATHED OR MAX. PURLIN SPACING = 4.71 FT.

MAX. UNBRACED BOTTOM CHORD LENGTH = 10.00 FT OR RIGID CEILING DIRECTLY APPLIED.

ALL PITCH BREAKS AND PERIMETER CORNER JOINTS MUST BE LATERALLY RESTRAINED.

LOADING

TOTAL LOAD CASES: (4)

CHORDS

MEMB. FR-TO	MAX. FACTORED FORCE (LBS)	FACTORED VERT. LOAD LC1 (PLF) FROM	TO	MAX CSI (LC)	MAX. UNBRAC LENGTH
A- B	0 / 35	-78.0	-78.0	0.15 (1)	10.00
B- C	0 / 19	-78.0	-78.0	0.19 (1)	10.00
C- D	-1515 / 0	-78.0	-78.0	0.18 (1)	5.18
D- E	-1588 / 0	-78.0	-78.0	0.46 (1)	4.71
E- F	-1588 / 0	-78.0	-78.0	0.46 (1)	4.71
F- G	-1515 / 0	-78.0	-78.0	0.18 (1)	5.18
G- H	0 / 19	-78.0	-78.0	0.19 (1)	10.00
H- I	0 / 35	-78.0	-78.0	0.15 (1)	10.00
O- B	-249 / 0	0.0	0.0	0.03 (1)	7.81
J- H	-249 / 0	0.0	0.0	0.03 (1)	7.81
O- N	0 / 1243	-18.5	-18.5	0.39 (4)	10.00
N- M	0 / 1245	-18.5	-18.5	0.40 (4)	10.00
M- L	0 / 1245	-18.5	-18.5	0.40 (4)	10.00
L- K	0 / 1245	-18.5	-18.5	0.40 (4)	10.00
K- J	0 / 1244	-18.5	-18.5	0.39 (4)	10.00

WEBS

MEMB. FR-TO	MAX. FACTORED FORCE (LBS)	MAX CSI (LC)
C- N	-1 / 51	0.02 (4)
D- M	0 / 492	0.11 (1)
M- E	-616 / 0	0.51 (1)
M- F	0 / 492	0.11 (1)
K- F	0 / 163	0.05 (4)
K- G	-2 / 51	0.02 (4)
O- C	-1739 / 0	0.90 (1)
G- J	-1739 / 0	0.90 (1)

DESIGN CRITERIA

SPECIFIED LOADS:

TOP CH.	LL	=	21.0	PSF
	DL	=	6.0	PSF
BOT CH.	LL	=	0.0	PSF
	DL	=	7.4	PSF
TOTAL LOAD		=	34.4	PSF

SPACING = 24.0 IN. C/C

LOADING IN FLAT SECTION BASED ON A SLOPE OF 2.00/12 MINIMUM

THIS TRUSS IS DESIGNED FOR RESIDENTIAL OR SMALL BUILDING REQUIREMENTS OF PART 9, NBCC 2015

THIS DESIGN COMPLIES WITH:
- PART 9 OF BCBC 2018 , ABC 2019
- PART 9 OF OBC 2012 (2019 AMENDMENT)
- CSA 086-14
- TPIC 2014

(55 % OF 23.0 P.S.F. G.S.L. PLUS 8.4 P.S.F. RAIN LOAD) EQUALS 21.0 P.S.F. SPECIFIED ROOF LIVE LOAD

ALLOWABLE DEFL.(LL)= L/360 (0.97")
CALCULATED VERT. DEFL.(LL) = L/ 999 (0.06")
ALLOWABLE DEFL.(TL)= L/360 (0.97")
CALCULATED VERT. DEFL.(TL) = L/ 999 (0.16")

CSI: TC=0.46/1.00 (D-E:1) , BC=0.40/1.00 (K-M:4) , WB=0.90/1.00 (G-J:1) , SSI=0.24/1.00 (D-E:1)

DOL LUMBER=1.00 NAIL=1.00 LS BEND=1.10 COMP=1.10 SHEAR=1.10 TENS= 1.10

COMPANION LIVE LOAD FACTOR = 1.00

TRUSS PLATE MANUFACTURER IS NOT RESPONSIBLE FOR QUALITY CONTROL IN THE TRUSS MANUFACTURING PLANT .

NAIL VALUES

PLATE	GRIP(DRY) (PSI) MAX	MIN	SHEAR (PLI) MAX	MIN	SECTION (PLI) MAX	MIN
MT20	650	371	1747	788	1987	1873

PLATE PLACEMENT TOL. = 0.250 inches

PLATE ROTATION TOL. = 5.0 Deg.

JSI GRIP= 0.87 (O) (INPUT = 0.90)
JSI METAL= 0.39 (C) (INPUT = 1.00)

JOB NAME	TRUSS NAME	QUANTITY	PLY	JOB DESC.	DRWG NO.
343190	H25		1	TRUSS DESC. JT 45147	E22052729

Alpha Roof Truss, Maple

Version 8.530 S Feb 23 2022 MiTek Industries, Inc. Tue Jun 7 13:30:32 2022 Page 1

ID:MF8iiriaTok7DlbpT4B71Xys4PG-3qFQR05MhSYWxu8cfTovsBaMm1yNXrTXSPYaF7z8qV5

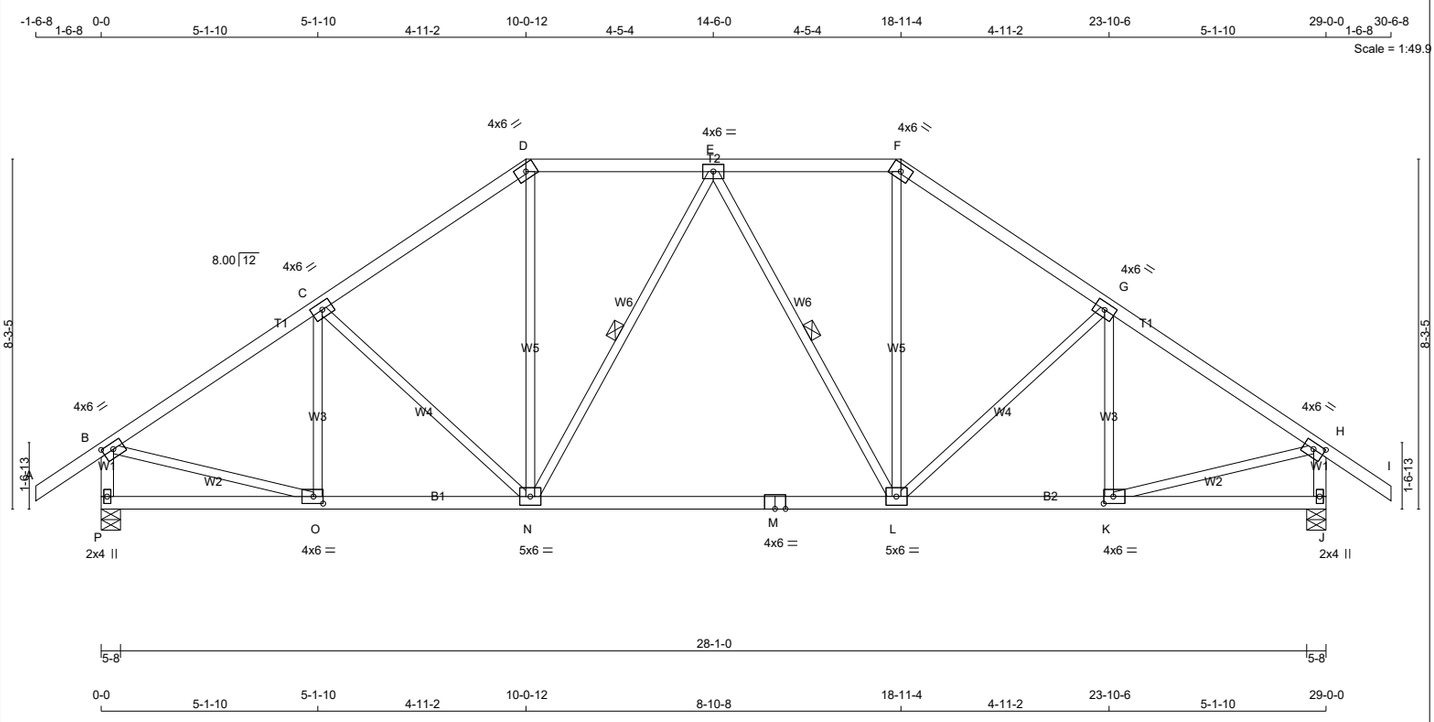

TOTAL WEIGHT = 3 X 131 = 392 lb

[M][F]

LUMBER

N. L. G. A. RULES

CHORDS	SIZE		LUMBER	DESCR.
A - D	2x4	DRY	No.2	SPF
D - F	2x4	DRY	No.2	SPF
F - I	2x4	DRY	No.2	SPF
P - B	2x4	DRY	No.2	SPF
J - H	2x4	DRY	No.2	SPF
P - M	2x4	DRY	No.2	SPF
M - J	2x4	DRY	No.2	SPF
ALL WEBS EXCEPT	2x3	DRY	No.2	SPF

DRY: SEASONED LUMBER.

PLATES (table is in inches)

JT	TYPE	PLATES	W	LEN	Y	X
B	TMVW-t	MT20	4.0	6.0	1.75	3.00
C, E, G						
C	TMWW-t	MT20	4.0	6.0		
D	TTW-h	MT20	4.0	6.0		
F	TTW-h	MT20	4.0	6.0		
H	TMVW-t	MT20	4.0	6.0	1.75	3.00
J	BMV1+p	MT20	2.0	4.0		
K	BMWW-t	MT20	4.0	6.0	2.00	2.75
L	BMWWW-t	MT20	5.0	6.0		
M	BS-t	MT20	4.0	6.0		
N	BMWWW-t	MT20	5.0	6.0		
O	BMWW-t	MT20	4.0	6.0	2.00	2.75
P	BMV1+p	MT20	2.0	4.0		

LATERAL BRACE(S) SHOWN SHALL BE 2X4 SPF#2

DIMENSIONS, SUPPORTS AND LOADINGS SPECIFIED BY FABRICATOR TO BE VERIFIED BY BUILDING DESIGNER

BEARINGS

JT	FACTORED GROSS REACTION VERT	HORZ	MAXIMUM FACTORED GROSS REACTION DOWN	HORZ	UPLIFT	INPUT BRG IN-SX	REQRD BRG IN-SX
P	1525	0	1525	0	0	5-8	1-10
J	1525	0	1525	0	0	5-8	1-10

UNFACTORED REACTIONS

JT	1ST LCASE COMBINED	MAX./MIN. COMPONENT REACTIONS SNOW	LIVE	PERM.LIVE	WIND	DEAD	SOIL
P	1085	677 / 0	0 / 0	0 / 0	0 / 0	408 / 0	0 / 0
J	1085	677 / 0	0 / 0	0 / 0	0 / 0	408 / 0	0 / 0

BEARING MATERIAL TO BE SPF NO.2 OR BETTER AT JOINT(S) P, J

BRACING

TOP CHORD TO BE SHEATHED OR MAX. PURLIN SPACING = 4.99 FT.
MAX. UNBRACED BOTTOM CHORD LENGTH = 10.00 FT OR RIGID CEILING DIRECTLY APPLIED.

ALL PITCH BREAKS AND PERIMETER CORNER JOINTS MUST BE LATERALLY RESTRAINED.

1 LATERAL BRACE(S) AT 1/ 2 LENGTH OF E-N, E-L.

END VERTICAL(S) MUST BE SHEATHED OR HAVE BRACES AS INDICATED IN THE MAX. UNBRACED LENGTH COLUMN OF THE TABLE BELOW

LOADING

TOTAL LOAD CASES: (4)

CHORDS MEMB. FR-TO	MAX. FACTORED FORCE (LBS)	FACTORED VERT. LOAD (PLF) FROM	TO	LC1	MAX CSI (LC)	MAX. UNBRAC LENGTH	WEBS MEMB. FR-TO	MAX. FACTORED FORCE (LBS)	MAX CSI (LC)
A- B	0 / 35	-78.0	-78.0	0.15 (1)	10.00		O- C	-236 / 0	0.09 (1)
B- C	-1561 / 0	-78.0	-78.0	0.29 (1)	4.99		C- N	-216 / 0	0.19 (1)
C- D	-1425 / 0	-78.0	-78.0	0.28 (1)	5.18		N- D	0 / 497	0.11 (1)
D- E	-1169 / 0	-78.0	-78.0	0.20 (1)	5.68		N- E	-239 / 0	0.14 (1)
E- F	-1169 / 0	-78.0	-78.0	0.20 (1)	5.68		E- L	-238 / 0	0.14 (1)
F- G	-1425 / 0	-78.0	-78.0	0.28 (1)	5.18		L- F	0 / 497	0.11 (1)
G- H	-1562 / 0	-78.0	-78.0	0.29 (1)	4.99		L- G	-216 / 0	0.19 (1)
H- I	0 / 35	-78.0	-78.0	0.15 (1)	10.00		K- G	-236 / 0	0.09 (1)
P- B	-1482 / 0	0.0	0.0	0.16 (1)	6.73		B- O	0 / 1359	0.31 (1)
J- H	-1482 / 0	0.0	0.0	0.16 (1)	6.73		K- H	0 / 1359	0.31 (1)
P- O	0 / 0	-18.5	-18.5	0.11 (4)	10.00				
O- N	0 / 1320	-18.5	-18.5	0.35 (4)	10.00				
N- M	0 / 1282	-18.5	-18.5	0.34 (4)	10.00				
M- L	0 / 1282	-18.5	-18.5	0.34 (4)	10.00				
L- K	0 / 1321	-18.5	-18.5	0.35 (4)	10.00				
K- J	0 / 0	-18.5	-18.5	0.11 (4)	10.00				

DESIGN CRITERIA

SPECIFIED LOADS:

TOP CH.	LL	=	21.0	PSF
	DL	=	6.0	PSF
BOT CH.	LL	=	0.0	PSF
	DL	=	7.4	PSF
TOTAL LOAD		=	34.4	PSF

SPACING = 24.0 IN. C/C

LOADING IN FLAT SECTION BASED ON A SLOPE OF 2.00/12 MINIMUM

THIS TRUSS IS DESIGNED FOR RESIDENTIAL OR SMALL BUILDING REQUIREMENTS OF PART 9, NBCC 2015

THIS DESIGN COMPLIES WITH:
- PART 9 OF BCBC 2018 , ABC 2019
- PART 9 OF OBC 2012 (2019 AMENDMENT)
- CSA 086-14
- TPIC 2014

(55 % OF 23.0 P.S.F. G.S.L. PLUS 8.4 P.S.F. RAIN LOAD) EQUALS 21.0 P.S.F. SPECIFIED ROOF LIVE LOAD

ALLOWABLE DEFL.(LL)= L/360 (0.97")
CALCULATED VERT. DEFL.(LL) = L/ 999 (0.05")
ALLOWABLE DEFL.(TL)= L/360 (0.97")
CALCULATED VERT. DEFL.(TL) = L/ 999 (0.18")

CSI: TC=0.29/1.00 (G-H:1) , BC=0.35/1.00 (K-L:4) , WB=0.31/1.00 (H-K:1) , SSI=0.17/1.00 (D-E:1)

DOL LUMBER=1.00 NAIL=1.00 LS BEND=1.10 COMP=1.10 SHEAR=1.10 TENS= 1.10

COMPANION LIVE LOAD FACTOR = 1.00

TRUSS PLATE MANUFACTURER IS NOT RESPONSIBLE FOR QUALITY CONTROL IN THE TRUSS MANUFACTURING PLANT .

NAIL VALUES

PLATE	GRIP(DRY) (PSI) MAX	MIN	SHEAR (PLI) MAX	MIN	SECTION (PLI) MAX	MIN
MT20	650	371	1747	788	1987	1873

PLATE PLACEMENT TOL. = 0.250 inches

PLATE ROTATION TOL. = 5.0 Deg.

JSI GRIP= 0.80 (K) (INPUT = 0.90)
JSI METAL= 0.41 (H) (INPUT = 1.00)

JOB NAME	TRUSS NAME	QUANTITY	PLY	JOB DESC.	DRWG NO.
343190	H26		1	TRUSS DESC. JT 45147	E22052730

Alpha Roof Truss, Maple

Version 8.530 S Feb 23 2022 MiTek Industries, Inc. Tue Jun 7 13:30:33 2022 Page 1

ID:MF8iiriaTok7DlbpT4B71Xys4PG-X1poeL6?SmqMZ2ipCAJ8PO6RMRIHGGNhh3H7oZz8qV4

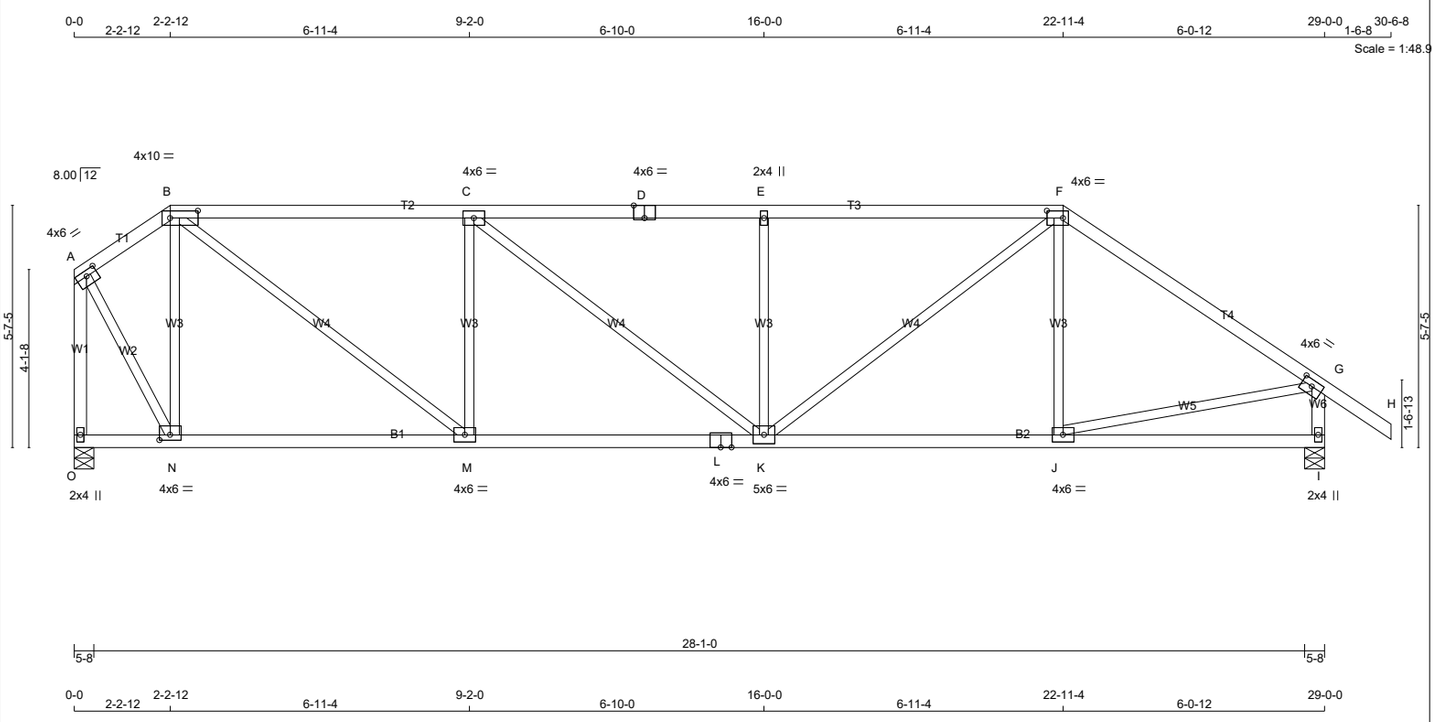

TOTAL WEIGHT = 121 lb

[M]

LUMBER

N. L. G. A. RULES

CHORDS	SIZE		LUMBER	DESCR.
A - B	2x4	DRY	No.2	SPF
B - D	2x4	DRY	No.2	SPF
D - F	2x4	DRY	No.2	SPF
F - H	2x4	DRY	No.2	SPF
O - A	2x4	DRY	No.2	SPF
I - G	2x4	DRY	No.2	SPF
O - L	2x4	DRY	No.2	SPF
L - I	2x4	DRY	No.2	SPF
ALL WEBS EXCEPT	2x3	DRY	No.2	SPF

DRY: SEASONED LUMBER.

PLATES (table is in inches)

JT	TYPE	PLATES	W	LEN	Y	X
A	TMVW-t	MT20	4.0	6.0	1.50	3.00
B	TTWW-l	MT20	4.0	10.0	2.00	7.75
C	TMWW-t	MT20	4.0	6.0		
D	TS-t	MT20	4.0	6.0	Edge	3.00
E	TMW+w	MT20	2.0	4.0		
F	TTWW-l	MT20	4.0	6.0	2.00	4.50
G	TMVW-t	MT20	4.0	6.0	1.75	3.00
I	BMV1+p	MT20	2.0	4.0		
J	BMWW-t	MT20	4.0	6.0		
K	BMWWW-t	MT20	5.0	6.0		
L	BS-t	MT20	4.0	6.0		
M	BMWW-t	MT20	4.0	6.0		
N	BMWW-t	MT20	4.0	6.0	1.50	3.00
O	BMV1+p	MT20	2.0	4.0		

Edge - INDICATES REFERENCE CORNER OF PLATE TOUCHES EDGE OF CHORD.

LATERAL BRACE(S) SHOWN SHALL BE 2X4 SPF#2

LICENSED PROFESSIONAL ENGINEER
V. WIDYA
100225448
06/07/2022
PROVINCE OF ONTARIO

DIMENSIONS, SUPPORTS AND LOADINGS SPECIFIED BY FABRICATOR TO BE VERIFIED BY BUILDING DESIGNER

BEARINGS

JT	FACTORED GROSS REACTION VERT	HORZ	MAXIMUM GROSS REACTION DOWN	HORZ	FACTORED UPLIFT	INPUT BRG IN-SX	REQRD BRG IN-SX
O	1399	0	1399	0	0	5-8	1-8
I	1525	0	1525	0	0	5-8	1-10

UNFACTORED REACTIONS

JT	1ST LCASE COMBINED	MAX./MIN. COMPONENT REACTIONS SNOW	LIVE	PERM.LIVE	WIND	DEAD	SOIL
O	997	609 / 0	0 / 0	0 / 0	0 / 0	389 / 0	0 / 0
I	1085	677 / 0	0 / 0	0 / 0	0 / 0	408 / 0	0 / 0

BEARING MATERIAL TO BE SPF NO.2 OR BETTER AT JOINT(S) O, I

BRACING

TOP CHORD TO BE SHEATHED OR MAX. PURLIN SPACING = 4.06 FT.
MAX. UNBRACED BOTTOM CHORD LENGTH = 10.00 FT OR RIGID CEILING DIRECTLY APPLIED.

ALL PITCH BREAKS AND PERIMETER CORNER JOINTS MUST BE LATERALLY RESTRAINED.

LOADING

TOTAL LOAD CASES: (4)

CHORDS

MEMB. FR-TO	MAX. FACTORED FORCE (LBS)	FACTORED VERT. LOAD (PLF) FROM	TO	LC1	MAX CSI (LC)	MAX. UNBRAC LENGTH
A- B	-689 / 0	-78.0	-78.0	0.07 (1)	6.25	
B- C	-1729 / 0	-78.0	-78.0	0.65 (1)	4.31	
C- D	-1965 / 0	-78.0	-78.0	0.68 (1)	4.06	
D- E	-1965 / 0	-78.0	-78.0	0.68 (1)	4.06	
E- F	-1965 / 0	-78.0	-78.0	0.68 (1)	4.07	
F- G	-1544 / 0	-78.0	-78.0	0.63 (1)	4.53	
G- H	0 / 35	-78.0	-78.0	0.15 (1)	10.00	
O- A	-1403 / 0	0.0	0.0	0.40 (1)	6.88	
I- G	-1481 / 0	0.0	0.0	0.16 (1)	6.73	
O- N	0 / 0	-18.5	-18.5	0.13 (4)	10.00	
N- M	0 / 555	-18.5	-18.5	0.23 (4)	10.00	
M- L	0 / 1729	-18.5	-18.5	0.37 (1)	10.00	
L- K	0 / 1729	-18.5	-18.5	0.37 (1)	10.00	
K- J	0 / 1281	-18.5	-18.5	0.31 (1)	10.00	
J- I	0 / 0	-18.5	-18.5	0.18 (4)	10.00	

WEBS

MEMB. FR-TO	MAX. FACTORED FORCE (LBS)	MAX CSI (LC)
N- B	-822 / 0	0.39 (1)
M- C	-769 / 0	0.37 (1)
K- E	-584 / 0	0.28 (1)
K- F	0 / 861	0.19 (1)
J- F	-124 / 48	0.06 (1)
A- N	0 / 1092	0.25 (1)
J- G	0 / 1309	0.29 (1)

DESIGN CRITERIA

SPECIFIED LOADS:

TOP CH.	LL	=	21.0	PSF
	DL	=	6.0	PSF
BOT CH.	LL	=	0.0	PSF
	DL	=	7.4	PSF
TOTAL LOAD		=	34.4	PSF

SPACING = 24.0 IN. C/C

LOADING IN FLAT SECTION BASED ON A SLOPE OF 2.00/12 MINIMUM

THIS TRUSS IS DESIGNED FOR RESIDENTIAL OR SMALL BUILDING REQUIREMENTS OF PART 9, NBCC 2015

THIS DESIGN COMPLIES WITH:
- PART 9 OF BCBC 2018 , ABC 2019
- PART 9 OF OBC 2012 (2019 AMENDMENT)
- CSA 086-14
- TPIC 2014

(55 % OF 23.0 P.S.F. G.S.L. PLUS 8.4 P.S.F. RAIN LOAD) EQUALS 21.0 P.S.F. SPECIFIED ROOF LIVE LOAD

ALLOWABLE DEFL.(LL)= L/360 (0.97")
CALCULATED VERT. DEFL.(LL) = L/ 999 (0.08")
ALLOWABLE DEFL.(TL)= L/360 (0.97")
CALCULATED VERT. DEFL.(TL) = L/ 999 (0.18")

CSI: TC=0.68/1.00 (E-F:1) , BC=0.37/1.00 (K-M:1) , WB=0.39/1.00 (B-N:1) , SSI=0.25/1.00 (B-C:1)

DOL LUMBER=1.00 NAIL=1.00 LS BEND=1.10 COMP=1.10 SHEAR=1.10 TENS= 1.10

COMPANION LIVE LOAD FACTOR = 1.00

TRUSS PLATE MANUFACTURER IS NOT RESPONSIBLE FOR QUALITY CONTROL IN THE TRUSS MANUFACTURING PLANT .

NAIL VALUES

PLATE	GRIP(DRY) (PSI) MAX	MIN	SHEAR (PLI) MAX	MIN	SECTION (PLI) MAX	MIN
MT20	650	371	1747	788	1987	1873

PLATE PLACEMENT TOL. = 0.250 inches

PLATE ROTATION TOL. = 5.0 Deg.

JSI GRIP= 0.88 (A) (INPUT = 0.90)
JSI METAL= 0.42 (G) (INPUT = 1.00)

JOB NAME	TRUSS NAME	QUANTITY	PLY	JOB DESC.	DRWG NO.
343190	J01		1	TRUSS DESC. JT 45147	E22052731

Alpa Roof Truss, Maple

Version 8.530 S Feb 23 2022 MiTek Industries, Inc. Tue Jun 7 13:30:35 2022 Page 1
ID:MF8iiriaTok7DlbpT4B71Xys4PG-UPxZ318F Nw4oMsBKbLcUpBqME1PkG 8NmEsSz8qV2

Scale = 1:25.2

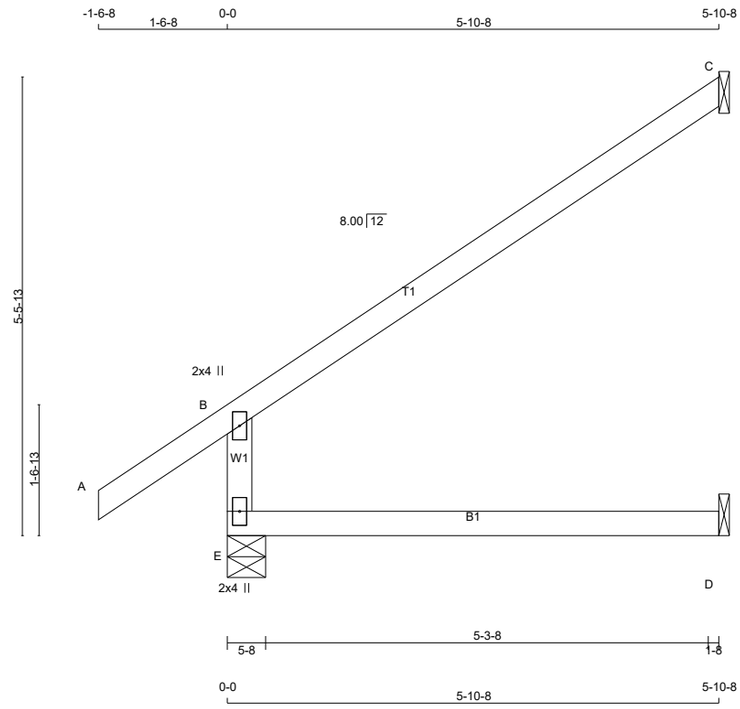

TOTAL WEIGHT = 6 X 18 = 110 lb

[M]

LUMBER

N. L. G. A. RULES

CHORDS	SIZE		LUMBER	DESCR.
E - B	2x4	DRY	No.2	SPF
A - C	2x4	DRY	No.2	SPF
E - D	2x4	DRY	No.2	SPF

DRY: SEASONED LUMBER.

PLATES (table is in inches)

JT	TYPE	PLATES	W	LEN	Y	X
B	TMV+p	MT20	2.0	4.0		
E	BMV1+p	MT20	2.0	4.0		

LATERAL BRACE(S) SHOWN SHALL BE 2X4 SPF#2

DIMENSIONS, SUPPORTS AND LOADINGS SPECIFIED BY FABRICATOR TO BE VERIFIED BY BUILDING DESIGNER

BEARINGS

JT	FACTORED GROSS REACTION VERT	HORZ	MAXIMUM FACTORED GROSS REACTION DOWN	HORZ	UPLIFT	INPUT BRG IN-SX	REQRD BRG IN-SX
E	475	0	475	0	0	5-8	1-8
C	172	0	172	0	0	1-8	1-8
D	46	0	52	0	0	1-8	1-8

SEE MITEK STANDARD DETAIL MSD2015-H FOR CONNECTION TO JOINT(S) C , D

UNFACTORED REACTIONS

JT	1ST LCASE COMBINED	MAX./MIN. COMPONENT REACTIONS SNOW	LIVE	PERM.LIVE	WIND	DEAD	SOIL
E	336	222 / 0	0 / 0	0 / 0	0 / 0	114 / 0	0 / 0
C	119	93 / 0	0 / 0	0 / 0	0 / 0	26 / 0	0 / 0
D	37	0 / 0	0 / 0	0 / 0	0 / 0	37 / 0	0 / 0

BEARING MATERIAL TO BE SPF NO.2 OR BETTER AT JOINT(S) E, C

BRACING

TOP CHORD TO BE SHEATHED OR MAX. PURLIN SPACING = 6.25 FT.
MAX. UNBRACED BOTTOM CHORD LENGTH = 10.00 FT OR RIGID CEILING DIRECTLY APPLIED.

ALL PITCH BREAKS AND PERIMETER CORNER JOINTS MUST BE LATERALLY RESTRAINED.

LOADING

TOTAL LOAD CASES: (4)

C H O R D S

MEMB. FR-TO	MAX. FORCE (LBS)	FACTORED VERT. LOAD (PLF)	FROM	TO	LC1 CSI (LC)	MAX UNBRAC LENGTH
E- B	-413 / 0	0.0	0.0		0.11 (4)	7.81
A- B	0 / 35	-78.0	-78.0		0.15 (1)	10.00
B- C	-32 / 0	-78.0	-78.0		0.46 (1)	6.25
E- D	0 / 0	-18.5	-18.5		0.13 (4)	10.00

W E B S

MEMB. FR-TO	MAX. FORCE (LBS)	FACTORED MAX CSI (LC)

DESIGN CRITERIA

SPECIFIED LOADS:

TOP CH.	LL	=	21.0	PSF
	DL	=	6.0	PSF
BOT CH.	LL	=	0.0	PSF
	DL	=	7.4	PSF
TOTAL LOAD		=	34.4	PSF

SPACING = 24.0 IN. C/C

THIS TRUSS IS DESIGNED FOR RESIDENTIAL OR SMALL BUILDING REQUIREMENTS OF PART 9, NBCC 2015

THIS DESIGN COMPLIES WITH:
- PART 9 OF BCBC 2018 , ABC 2019
- PART 9 OF OBC 2012 (2019 AMENDMENT)
- CSA 086-14
- TPIC 2014

DESIGN ASSUMPTIONS
-OVERHANG NOT TO BE ALTERED OR CUT OFF.

(55 % OF 23.0 P.S.F. G.S.L. PLUS 8.4 P.S.F. RAIN LOAD) EQUALS 21.0 P.S.F. SPECIFIED ROOF LIVE LOAD

ALLOWABLE DEFL.(LL)= L/360 (0.20")
CALCULATED VERT. DEFL.(LL) = L/ 999 (0.00")
ALLOWABLE DEFL.(TL)= L/360 (0.20")
CALCULATED VERT. DEFL.(TL) = L/ 999 (0.03")

CSI: TC=0.46/1.00 (B-C:1) , BC=0.13/1.00 (D-E:4) , WB=0.00/1.00 (n/a:0) , SSI=0.19/1.00 (B-C:1)

DOL LUMBER=1.00 NAIL=1.00 LS BEND=1.10 COMP=1.10 SHEAR=1.10 TENS= 1.10

COMPANION LIVE LOAD FACTOR = 1.00

AUTOSOLVE RIGHT HEEL ONLY

TRUSS PLATE MANUFACTURER IS NOT RESPONSIBLE FOR QUALITY CONTROL IN THE TRUSS MANUFACTURING PLANT .

NAIL VALUES

PLATE	GRIP(DRY) (PSI) MAX	MIN	SHEAR (PLI) MAX	MIN	SECTION (PLI) MAX	MIN
MT20	650	371	1747	788	1987	1873

PLATE PLACEMENT TOL. = 0.250 inches

PLATE ROTATION TOL. = 5.0 Deg.

JSI GRIP= 0.25 (B) (INPUT = 0.90)
JSI METAL= 0.21 (B) (INPUT = 1.00)

JOB NAME	TRUSS NAME	QUANTITY	PLY	JOB DESC.		DRWG NO.
343190	J02		1	TRUSS DESC.	JT 45147	E22052732

Alpa Roof Truss, Maple

Version 8.530 S Feb 23 2022 MiTek Industries, Inc. Tue Jun 7 13:30:36 2022 Page 1
ID:MF8iiriaTok7DlbpT4B71Xys4PG-ybVxHN8tlh3xQWRNuJsr11k4heLQTiZ7N1WnOuz8gV1

Scale = 1:28.7

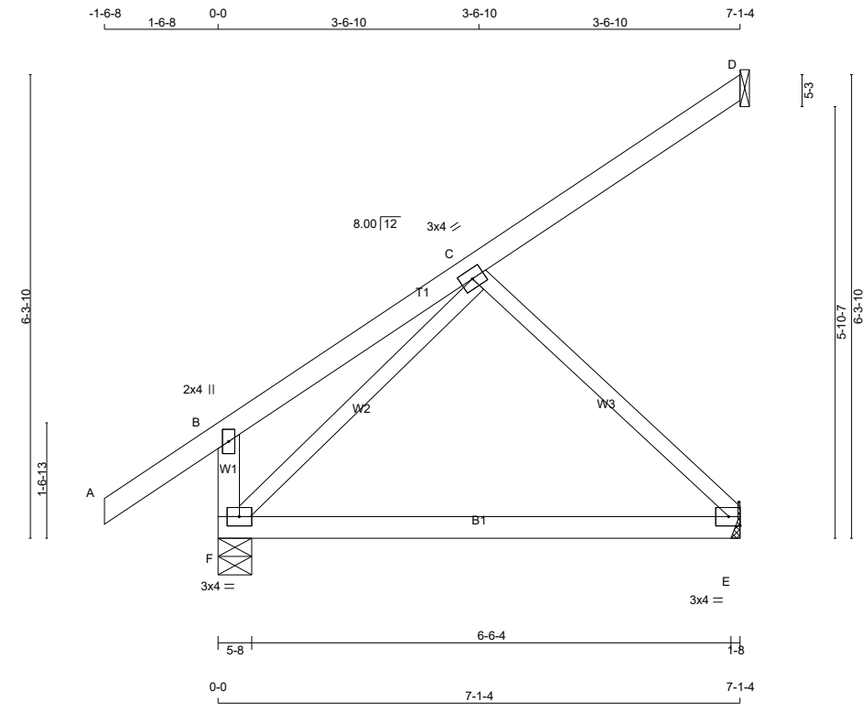

TOTAL WEIGHT = 10 X 29 = 291 lb

[M][F]

LUMBER

N. L. G. A. RULES

CHORDS	SIZE		LUMBER	DESCR.
F - B	2x4	DRY	No.2	SPF
A - D	2x4	DRY	No.2	SPF
F - E	2x4	DRY	No.2	SPF
ALL WEBS	2x3	DRY	No.2	SPF

DRY: SEASONED LUMBER.

PLATES (table is in inches)

JT	TYPE	PLATES	W	LEN	Y	X
B	TMV+p	MT20	2.0	4.0		
C	TMWW-t	MT20	3.0	4.0		
E	BMW1-t	MT20	3.0	4.0		Edge
F	BMVW1-t	MT20	3.0	4.0		

Edge - INDICATES REFERENCE CORNER OF PLATE TOUCHES EDGE OF CHORD.

LATERAL BRACE(S) SHOWN SHALL BE 2X4 SPF#2

DIMENSIONS, SUPPORTS AND LOADINGS SPECIFIED BY FABRICATOR TO BE VERIFIED BY BUILDING DESIGNER

BEARINGS

JT	FACTORED GROSS REACTION VERT	HORZ	MAXIMUM FACTORED GROSS REACTION DOWN	HORZ	UPLIFT	INPUT BRG	REQRD BRG
F	467	0	467	0	0	5-8	1-8
D	110	0	110	0	0	1-8	1-8
E	233	0	233	0	0	MECHANICAL	

A SUITABLE HANGER/MECHANICAL CONNECTION IS REQUIRED AT JOINT E. MINIMUM BEARING LENGTH AT JOINT E = 1-8.

SEE MITEK STANDARD DETAIL MSD2015-H FOR CONNECTION TO JOINT(S) D

UNFACTORED REACTIONS

JT	1ST LCASE COMBINED	MAX./MIN. COMPONENT REACTIONS SNOW	LIVE	PERM.LIVE	WIND	DEAD	SOIL
F	330	216 / 0	0 / 0	0 / 0	0 / 0	114 / 0	0 / 0
D	76	59 / 0	0 / 0	0 / 0	0 / 0	17 / 0	0 / 0
E	169	91 / 0	0 / 0	0 / 0	0 / 0	78 / 0	0 / 0

BEARING MATERIAL TO BE SPF NO.2 OR BETTER AT JOINT(S) F

BRACING

TOP CHORD TO BE SHEATHED OR MAX. PURLIN SPACING = 6.25 FT.
MAX. UNBRACED BOTTOM CHORD LENGTH = 10.00 FT OR RIGID CEILING DIRECTLY APPLIED.

ALL PITCH BREAKS AND PERIMETER CORNER JOINTS MUST BE LATERALLY RESTRAINED.

LOADING

TOTAL LOAD CASES: (4)

CHORDS

MEMB. FR-TO	MAX. FACTORED FORCE (LBS)	FACTORED VERT. LOAD LC1 (PLF) FROM	TO	MAX CSI (LC)	MAX. UNBRAC LENGTH
F- B	-226 / 0	0.0	0.0	0.02 (1)	7.81
A- B	0 / 35	-78.0	-78.0	0.15 (1)	10.00
B- C	0 / 19	-78.0	-78.0	0.17 (1)	10.00
C- D	-18 / 0	-78.0	-78.0	0.12 (1)	6.25
F- E	0 / 171	-18.5	-18.5	0.28 (4)	10.00

WEBS

MEMB. FR-TO	MAX. FACTORED FORCE (LBS)	MAX CSI (LC)
F- C	-245 / 0	0.09 (1)
C- E	-240 / 0	0.11 (1)

DESIGN CRITERIA

SPECIFIED LOADS:

TOP CH.	LL	=	21.0	PSF
	DL	=	6.0	PSF
BOT CH.	LL	=	0.0	PSF
	DL	=	7.4	PSF
TOTAL LOAD		=	34.4	PSF

SPACING = 24.0 IN. C/C

THIS TRUSS IS DESIGNED FOR RESIDENTIAL OR SMALL BUILDING REQUIREMENTS OF PART 9, NBCC 2015

THIS DESIGN COMPLIES WITH:
- PART 9 OF BCBC 2018 , ABC 2019
- PART 9 OF OBC 2012 (2019 AMENDMENT)
- CSA 086-14
- TPIC 2014

(55 % OF 23.0 P.S.F. G.S.L. PLUS 8.4 P.S.F. RAIN LOAD) EQUALS 21.0 P.S.F. SPECIFIED ROOF LIVE LOAD

ALLOWABLE DEFL.(TL)= L/360 (0.23")
CALCULATED VERT. DEFL.(TL) = L/ 767 (0.11")

CSI: TC=0.17/1.00 (B-C:1) , BC=0.28/1.00 (E-F:4) , WB=0.11/1.00 (C-E:1) , SSI=0.11/1.00 (C-D:1)

DOL LUMBER=1.00 NAIL=1.00 LS BEND=1.10 COMP=1.10 SHEAR=1.10 TENS= 1.10

COMPANION LIVE LOAD FACTOR = 1.00

TRUSS PLATE MANUFACTURER IS NOT RESPONSIBLE FOR QUALITY CONTROL IN THE TRUSS MANUFACTURING PLANT .

NAIL VALUES

PLATE	GRIP(DRY) (PSI) MAX	MIN	SHEAR (PLI) MAX	MIN	SECTION (PLI) MAX	MIN
MT20	650	371	1747	788	1987	1873

PLATE PLACEMENT TOL. = 0.250 inches

PLATE ROTATION TOL. = 5.0 Deg.

JSI GRIP= 0.30 (F) (INPUT = 0.90)
JSI METAL= 0.12 (B) (INPUT = 1.00)

JOB NAME	TRUSS NAME	QUANTITY	PLY	JOB DESC.		DRWG NO.
343190	J03S		1	TRUSS DESC.	JT 45147	E22052733

Alpa Roof Truss, Maple

Version 8.530 S Feb 23 2022 MiTek Industries, Inc. Tue Jun 7 13:30:38 2022 Page 1

ID:MF8iiriaTok7DlbpT4B71Xys4PG-u chh3A7GIJffpbm?jvJ6SpN7S2PxdjQqL?uTnz8gV?

Scale = 1:25.8

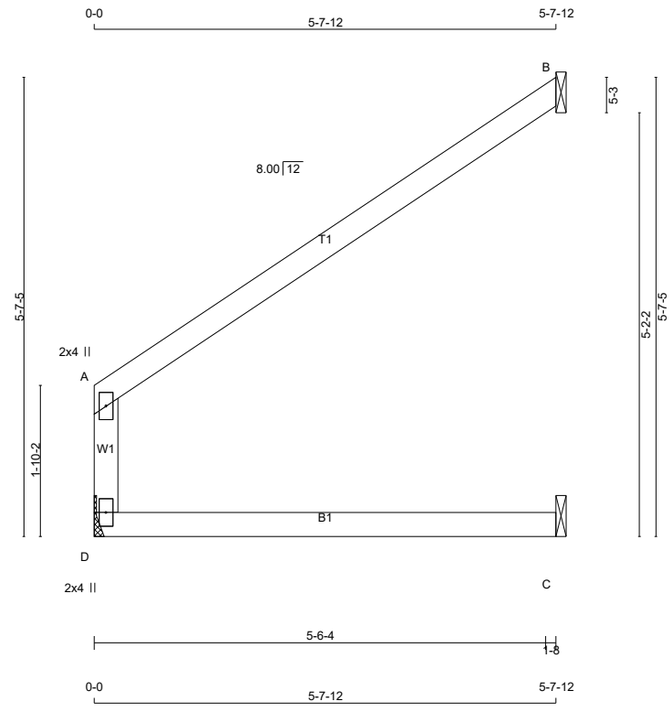

TOTAL WEIGHT = 10 X 16 = 160 lb

[M][F]

LUMBER

N. L. G. A. RULES

CHORDS	SIZE		LUMBER	DESCR.
D - A	2x4	DRY	No.2	SPF
A - B	2x4	DRY	No.2	SPF
D - C	2x4	DRY	No.2	SPF

DRY: SEASONED LUMBER.

PLATES (table is in inches)

JT	TYPE	PLATES	W	LEN	Y	X
A	TMV+p	MT20	2.0	4.0		
D	BMV1+p	MT20	2.0	4.0		

LATERAL BRACE(S) SHOWN SHALL BE 2X4 SPF#2

DIMENSIONS, SUPPORTS AND LOADINGS SPECIFIED BY FABRICATOR TO BE VERIFIED BY BUILDING DESIGNER

BEARINGS

JT	FACTORED GROSS REACTION VERT	HORZ	MAXIMUM FACTORED GROSS REACTION DOWN	HORZ	UPLIFT	INPUT BRG IN-SX	REQRD BRG IN-SX
D	272	0	272	0	0	MECHANICAL	
B	202	0	202	0	0	1-8	1-8
C	70	0	70	0	0	1-8	1-8

A SUITABLE HANGER/MECHANICAL CONNECTION IS REQUIRED AT JOINT D. MINIMUM BEARING LENGTH AT JOINT D = 1-8.

SEE MITEK STANDARD DETAIL MSD2015-H FOR CONNECTION TO JOINT(S) B , C

UNFACTORED REACTIONS

JT	1ST LCASE COMBINED	MAX./MIN. COMPONENT REACTIONS SNOW	LIVE	PERM.LIVE	WIND	DEAD	SOIL
D	194	119 / 0	0 / 0	0 / 0	0 / 0	76 / 0	0 / 0
B	141	107 / 0	0 / 0	0 / 0	0 / 0	34 / 0	0 / 0
C	54	12 / 0	0 / 0	0 / 0	0 / 0	42 / 0	0 / 0

BRACING

TOP CHORD TO BE SHEATHED OR MAX. PURLIN SPACING = 10.00 FT.
MAX. UNBRACED BOTTOM CHORD LENGTH = 10.00 FT OR RIGID CEILING DIRECTLY APPLIED.

ALL PITCH BREAKS AND PERIMETER CORNER JOINTS MUST BE LATERALLY RESTRAINED.

LOADING

TOTAL LOAD CASES: (4)

CHORDS MEMB. FR-TO	MAX. FACTORED FORCE (LBS)	VERT. LOAD (PLF) FROM	TO	LC1 MAX CSI (LC)	MAX. UNBRAC LENGTH
D- A	-238 / 0	0.0	0.0	0.12 (1)	7.81
A- B	-10 / 0	-78.0	-78.0	0.36 (1)	10.00
D- C	0 / 0	-18.5	-18.5	0.18 (1)	10.00

WEBS MEMB. FR-TO	MAX. FACTORED FORCE (LBS)	MAX CSI (LC)

DESIGN CRITERIA

SPECIFIED LOADS:

TOP CH.	LL	=	21.0	PSF
	DL	=	6.0	PSF
BOT CH.	LL	=	0.0	PSF
	DL	=	7.4	PSF
TOTAL LOAD		=	34.4	PSF

SPACING = 24.0 IN. C/C

THIS TRUSS IS DESIGNED FOR RESIDENTIAL OR SMALL BUILDING REQUIREMENTS OF PART 9, NBCC 2015

THIS DESIGN COMPLIES WITH:
- PART 9 OF BCBC 2018 , ABC 2019
- PART 9 OF OBC 2012 (2019 AMENDMENT)
- CSA 086-14
- TPIC 2014

(55 % OF 23.0 P.S.F. G.S.L. PLUS 8.4 P.S.F. RAIN LOAD) EQUALS 21.0 P.S.F. SPECIFIED ROOF LIVE LOAD

ALLOWABLE DEFL.(LL)= L/360 (0.19")
CALCULATED VERT. DEFL.(LL) = L/ 999 (0.03")
ALLOWABLE DEFL.(TL)= L/360 (0.19")
CALCULATED VERT. DEFL.(TL) = L/ 774 (0.09")

CSI: TC=0.36/1.00 (A-B:1) , BC=0.18/1.00 (C-D:1) , WB=0.00/1.00 (n/a:0) , SSI=0.15/1.00 (A-B:1)

DOL LUMBER=1.00 NAIL=1.00 LS BEND=1.10 COMP=1.10 SHEAR=1.10 TENS= 1.10

COMPANION LIVE LOAD FACTOR = 1.00

TRUSS PLATE MANUFACTURER IS NOT RESPONSIBLE FOR QUALITY CONTROL IN THE TRUSS MANUFACTURING PLANT .

NAIL VALUES

PLATE	GRIP(DRY) (PSI) MAX	MIN	SHEAR (PLI) MAX	MIN	SECTION (PLI) MAX	MIN
MT20	650	371	1747	788	1987	1873

PLATE PLACEMENT TOL. = 0.250 inches

PLATE ROTATION TOL. = 5.0 Deg.

JSI GRIP= 0.15 (A) (INPUT = 0.90)
JSI METAL= 0.12 (A) (INPUT = 1.00)

LUS – Double Shear Joist Hangers

SIMPSON Strong-Tie®

All LUS hangers have double shear nailing. This patented innovation distributes the load through two points on each joist nail for greater strength. It also allows the use of fewer nails, faster installation and the use of common nails for all connections.

Material: 18 gauge

Finish: G90 galvanized

Design:

- Factored resistances are in accordance with CSA O86-14.
- Uplift resistances have been increased 15%. No further increase is permitted.
- Wood shear is not considered in the factored resistances given. The specifier must ensure that the joist and header capacities are capable of withstanding these loads.

Installation:

- Use all specified fasteners.
- Nails: 16d = 0.162" dia. x 3½" long common wire, 10d = 0.148" x 3" long common wire.
- Double shear nails must be driven at an angle through the joist or truss into the header to achieve the table loads.
- Not designed for welded or nailer applications.

Options:

- These hangers cannot be modified

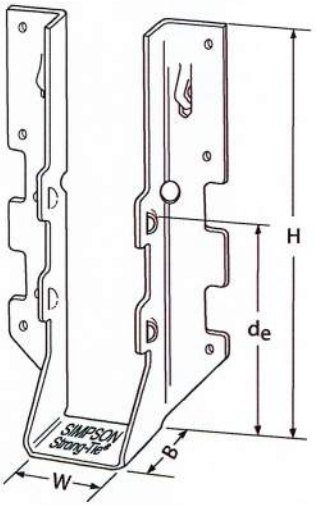

LUS28

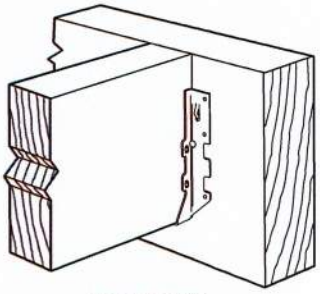

Typical LUS Installation

Model No.	Ga.	Dimensions (in.)				Fasteners		Factored Resistance (lb.)			
								D.Fir-L		S-P-F	
		W	H	B	d_e[1]	Face	Joist	Uplift (K_D=1.15)	Normal (K_D=1.00)	Uplift (K_D=1.15)	Normal (K_D=1.00)
LUS24	18	1 9/16	3 1/8	1 3/4	1 15/16	(4) 10d	(2) 10d	710	1630	645	1155
LUS24-2	18	3 1/8	3 1/8	2	1 13/16	(4) 16d	(2) 16d	835	2020	590	1435
LUS26	18	1 9/16	4 3/4	1 3/4	3 5/8	(4) 10d	(4) 10d	1420	2170	1290	1630
LUS26-2	18	3 1/8	4 7/8	2	4	(4) 16d	(4) 16d	1720	2595	1545	1920
LUS26-3	18	4 5/8	4 3/16	2	3 1/4	(4) 16d	(4) 16d	1720	2595	1545	2340
LUS28	18	1 9/16	6 5/8	1 3/4	3 3/4	(6) 10d	(6) 10d	1420	2520	1290	1790
LUS28-2	18	3 1/8	7	2	4	(6) 16d	(4) 16d	1720	3325	1545	2575
LUS28-3	18	4 5/8	6 1/4	2	3 1/4	(6) 16d	(4) 16d	1720	3325	1545	2375
LUS210	18	1 9/16	7 13/16	1 3/4	3 7/8	(8) 10d	(4) 10d	1420	2785	1290	2210
LUS210-2	18	3 1/8	9	2	6	(8) 16d	(6) 16d	2580	4500	2320	3195
LUS210-3	18	4 5/8	8 3/16	2	5 1/4	(8) 16d	(6) 16d	2580	3345	2320	2375

1. d_e is the distance from the seat of the hanger to the highest joist nail.

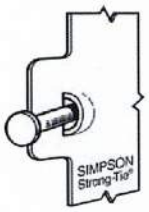

Dome Double Shear Nailing prevents tabs breaking off (available on some models).

U.S. Patent 5,603,580

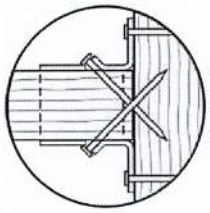

Double Shear Nailing Top View.

LICENSED PROFESSIONAL ENGINEER
04/01/2020
B. D. BUNTING
PROVINCE OF ONTARIO

LIMIT STATES DESIGN

This technical bulletin is effective until June 30, 2022, and reflects information available as of April 1, 2020. This information is updated periodically and should not be relied upon after June 30, 2022. Contact Simpson Strong-Tie for current information and limited warranty or see strongtie.com.

© 2020 Simpson Strong-Tie Company Inc.

(800) 999-5099
strongtie.com

TECHNICAL BULLETIN

HUS/LJS – Double Shear Joist Hangers

SIMPSON Strong-Tie®

All hangers have double shear nailing. This patented innovation distributes the load through two points on each joist nail for greater strength. It also allows the use of fewer nails, faster installation and the use of common nails for all connections. Do not bend or remove tabs.

Material: See table

Finish: G90 galvanized

Design:

- Factored resistances are in accordance with CSA O86 -14.
- Uplift resistances have been increased 15%. No further increase is permitted.
- Wood shear is not considered in the factored resistances given. The specifier must ensure that the joist and header capacities are capable of withstanding these loads.

Installation:

- Use all specified fasteners
- Nails: 16d = 0.162" dia. x 3½" long common wire
- Double shear nails must be driven at an angle through the joist or truss into the header to achieve the table loads
- Not designed for welded or nailer applications

Options:

- See current catalogue for options

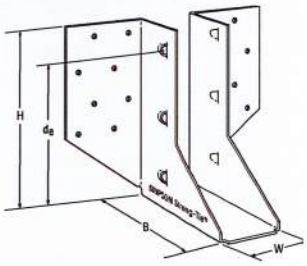

LJS26DS

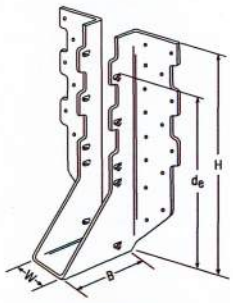

HUS210
(HUS26, HUS28, similar)

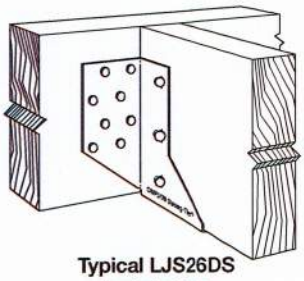

Typical LJS26DS Installation

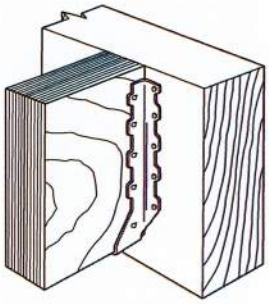

Typical HUS Installation

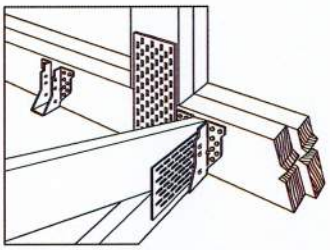

Typical HUS Installation
(Truss Designer to provide fastener quantity for connecting multiple members together)

Model No.	Ga.	Dimensions (in.)				Fasteners		Factored Resistance (lb.)			
								D.Fir-L		S-P-F	
		W	H	B	d_e[1]	Face	Joist	Uplift (K_D=1.15) lb.	Normal (K_D=1.00) lb.	Uplift (K_D=1.15) lb.	Normal (K_D=1.00) lb.
LJS26DS	18	1 9/16	5	3½	4⅝	(16) 16d	(6) 16d	2055	4265	1460	4115
HUS26	16	1⅝	5⅜	3	3 15/16	(14) 16d	(6) 16d	2705	4940	2065	3875
HUS28	16	1⅝	7 3/32	3	6 3/32	(22) 16d	(8) 16d	3605	5365	2675	4345
HUS210	16	1⅝	9 3/32	3	7 31/32	(30) 16d	(10) 16d	4505	5795	4010	4740
HUS1.81/10	16	1 13/16	9	3	8	(30) 16d	(10) 16d	4505	6450	4010	5200

1. d_e is the distance from the seat of the hanger to the highest joist nail.

Dome Double Shear Nailing prevents tabs breaking off (available on some models).

U.S. Patent 5,603,580

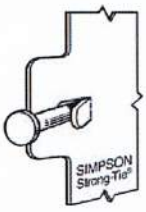

Double Shear Nailing Side View. Do not bend tab back.

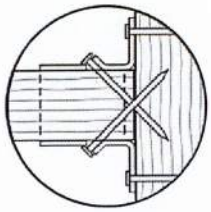

Double Shear Nailing Top View.

LIMIT STATES DESIGN

This technical bulletin is effective until June 30, 2022, and reflects information available as of April 1, 2020. This information is updated periodically and should not be relied upon after June 30, 2022. Contact Simpson Strong-Tie for current information and limited warranty or see strongtie.com.

© 2020 Simpson Strong-Tie Company Inc.

(800) 999-5099
strongtie.com

TBE – Truss Bearing Enhancers

SIMPSON Strong-Tie®

One size works with any number of girder plys. The TBE transfers load from the truss or girder to plates for bearing-limited conditions, and provides exceptional uplift capacity. Replaces nail-on scabs that provide lower load transfer, or in some cases, an additional ply when needed for bearing. The table lists factored resistances for TBE4 used on 2x4 and TBE6 used on 2x6 top plates. The tables give the different resistances calculated for TBE with and without wood bearing.

Material: 18 gauge

Finish: G90 galvanized

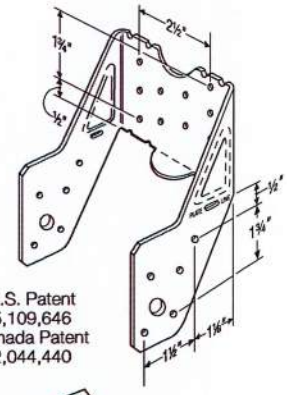

TBE4
(TBE6 similar)

U.S. Patent
5,109,646
Canada Patent
2,044,440

Design:

- Factored resistances are in accordance with CSA 086-14.
- Factored uplift resistances have been increased 15% for short term load duration with no further increase allowed; reduce resistances by 15% for standard term load duration.
- Factored resistances are determined by nail shear calculations or tests of the metal connectors. The attached wood members must be designed to with stand the loads imposed by the nails.

Installation:

- Use all specified fasteners.
- Nails: 10d = 0.148" dia x 3" long common wire, 10d x 1½" = 0.148" dia x 1½" long.
- TBE must be installed in pairs.
- Top plate size is 2x4 for TBE4, 2x6 for TBE6. Use alternate installation for TBE4 and TBE6 on larger plates or pre-sheathed walls.
- Do not use TBEs in end-grain-bearing applications.
- See current catalogue for alternate installations.

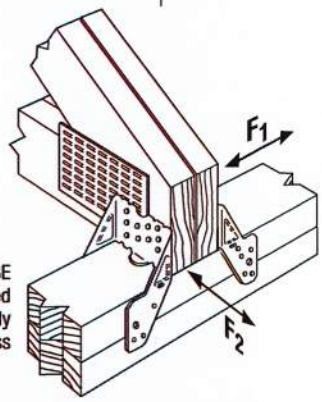

Two TBE installed with two ply girder truss

Model No.	No. of Plies	Fasteners: Truss	Fasteners: Plate	TBE Only Factored Resistance: Uplift (K_D = 1.15)	TBE Only Factored Resistance: Normal (K_D = 1.00)	TBE Only Factored Resistance: Lateral (K_D = 1.15) F_1	TBE Only Factored Resistance: Lateral (K_D = 1.15) F_2	Combined TBE and Wood Bearing Factored Resistance: Normal[2] (K_D = 1.00)	Combined TBE and Wood Bearing Factored Resistance: TBL[4]
				lb.	lb.	lb.	lb.	lb.	in.
D.Fir-L									
TBE4	1	(20) 10d x 1½"	(20) 10d x 1½"	1605	3540	655	1415	7820	6.44
	2	(20) 10d	(20) 10d	1605	3660	655	1415	12180	5.00
	3	(20) 10d	(20) 10d	1605	3660	655	1415	16445	4.50
	4	(20) 10d	(20) 10d	1605	3660	655	1415	20705	4.25
TBE6	1	(20) 10d x 1½"	(20) 10d x 1½"	1760	3540	490	1745	10235	8.41
	2	(20) 10d	(20) 10d	1760	3860	490	1745	17250	7.09
	3	(20) 10d	(20) 10d	1760	3860	490	1745	23945	6.56
	4	(20) 10d	(20) 10d	1760	3860	490	1745	30640	6.29
S-P-F									
TBE4	1	(20) 10d x 1½"	(20) 10d x 1½"	1605	3220	615	1415	6445	6.99
	2	(20) 10d	(20) 10d	1605	3440	615	1415	9890	5.37
	3	(20) 10d	(20) 10d	1605	3440	615	1415	13120	4.74
	4	(20) 10d	(20) 10d	1605	3440	615	1415	16345	4.43
TBE6	1	(20) 10d x 1½"	(20) 10d x 1½"	1760	3220	490	1585	8290	8.99
	2	(20) 10d	(20) 10d	1760	3440	490	1585	13680	7.42
	3	(20) 10d	(20) 10d	1760	3440	490	1585	18750	6.78
	4	(20) 10d	(20) 10d	1760	3440	490	1585	23820	6.46

1. Factored resistances are for two TBEs only. Wood factored bearing resistance may be added as shown in the table.
2. Factored bearing resistances shown assume Q_r/A_b and Q'_r/A'_b = 812 psi (5.60 MPa) for D.Fir-L and 614 psi (4.24 MPa) for S-P-F. See clauses 6.5.4 and 7.5.9 TPIC 2014 for required bearing reinforcement when compression loads are applied to both sides of truss member.
3. Use lower of top plate or wood truss species.
4. Total bearing length, TBL, equals the plate width plus simulated bearing length provided by the TBE. TBE4 = 3½" plate width; TBE6 = 5½" plate width.

LICENSED PROFESSIONAL ENGINEER
04/01/2020
B. D. BUNTING
PROVINCE OF ONTARIO

LIMIT STATES DESIGN

This technical bulletin is effective until June 30, 2022, and reflects information available as of April 1, 2020. This information is updated periodically and should not be relied upon after June 30, 2022. Contact Simpson Strong-Tie for current information and limited warranty or see strongtie.com.

© 2020 Simpson Strong-Tie Company Inc.

(800) 999-5099
strongtie.com

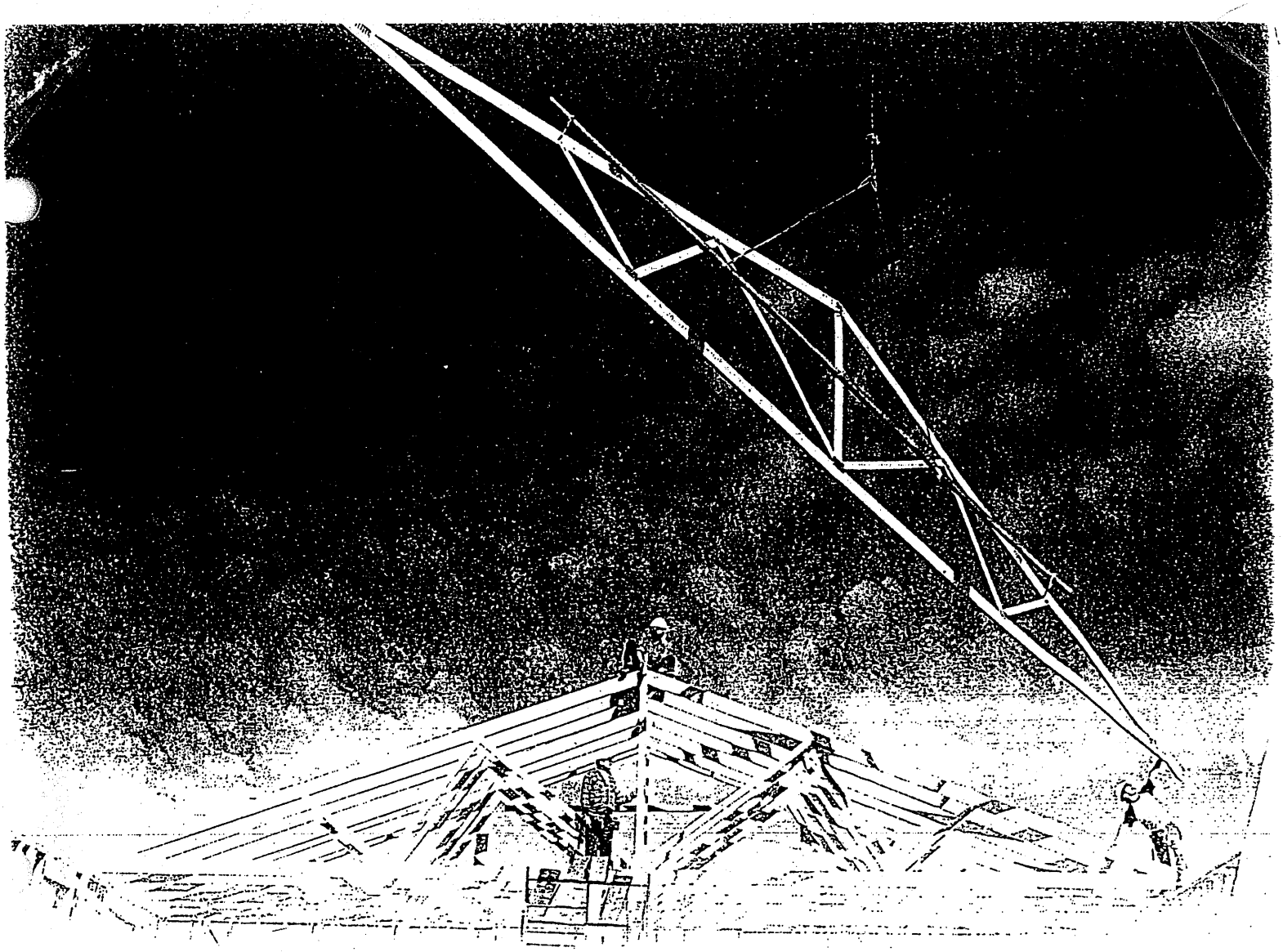

Wood Truss Installation

A Guide to proper handling, erecting and bracing metal plate connected wood trusses

Table of Content

Warning.....4

1 Unloading & Lifting.....5

2 Job Site Handling.....5

3 Hoisting.....6

4 Beginning the Erection Process.....7

5 Erection Tolerance.....8

6 Bracing.....8

7 Bracing Requirements for 3 Planes of Roof.....9

8 Stacking Materials.....10

Caution Notes.....11

Warning

General

Familiarity with the **Construction Design Documents**, the **Truss Design Drawings**, and **Truss Placement Plans** (if required by the **Construction Design Documents**) is required to properly erect, brace, and connect the trusses to the building system.

All of the care and quality involved in the design and manufacture of wood trusses can be jeopardized if the trusses are not properly handled, erected, and braced.

The consequences of improper handling, erecting, and bracing may be a collapse of the structure, which at best is a substantial loss of time and materials, and at worst is a loss of life. The majority of truss accidents occur during truss installation and not as a result of improper design or manufacture.

Prior to truss erection, the builder/erector shall meet with the erection crew for a safety and planning meeting, making sure each crew member understands his or her roles and responsibilities during the erection process.

Temporary Erection Bracing

Trusses are not marked in any way to identify the frequency, or location of temporary erection bracing.

All temporary bracing shall comply with the latest edition of *Commentary and Recommendations for Handling, Installing & Bracing Metal Plate Connected Wood Trusses* (HIB), published by the Truss Plate Institute, and/or as specified in the **Construction Design Documents** prepared by the building designer.

Permanent Truss Bracing

Permanent bracing for the roof or floor trusses is the responsibility of the building designer and should be shown on the **Construction Design Documents**. Permanent bracing locations for individual compression members of a wood truss are shown on the **Truss Design Drawings**, and shall be installed by the building or erection contractor. This bracing is needed for the proper performance of individual trusses within the roof or floor system. The design and connection of the bracing to the truss and then to the overall building system is the responsibility of the building designer, and is in addition to the permanent bracing plan, which is also specified by the building designer.

Special Design Requirements

Special design requirements, such as wind bracing, portal bracing, seismic bracing, diaphragms, shear walls, or other load transfer elements and their connections to wood trusses must be considered separately by the building designer, who shall determine size, location, and method of connections for all bracing as needed to resist these forces.

1 Unloading & Lifting

Never handle trusses flat

Beginning with the unloading process, and throughout all phases of construction, care must be taken to avoid **lateral bending** of trusses, which can cause damage to the lumber and metal connector plates at the joints.

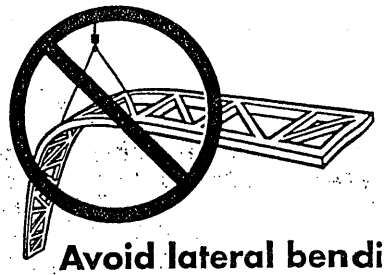

Avoid lateral bending

- **Use special care in windy weather.**
- **If using a crane within 10 feet of an electric line, contact the local power company.**
- **If using a crane within 5 miles of an airport, contact the airport 30 days prior to erection to learn about any safety regulations that must be followed.**

2 Job Site Handling

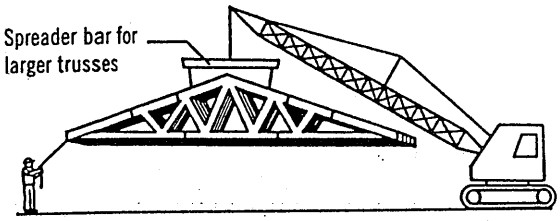

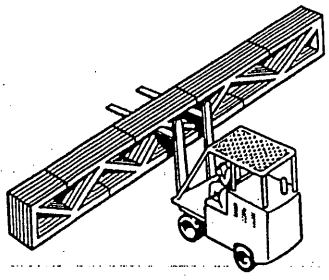

All trusses should be picked up at the top chords in a vertical position only

Proper banding and smooth ground allow for unloading of trusses without damage. This should be done as close to the building site as possible to minimize handling. **Do not** break banding until installation begins. Hand erection of trusses is allowed, provided excessive lateral bending is prevented.

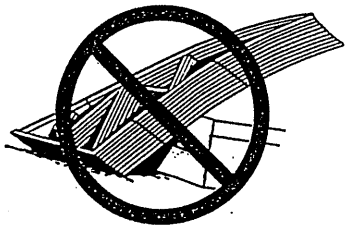

Do not store unbraced bundles upright

If trusses are stored vertically they shall be braced in a manner that will prevent tipping or topping. Generally cuting of the banding is done just prior to installation.

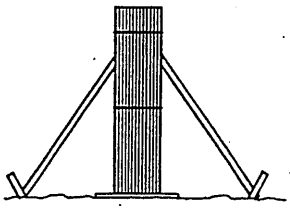

Do not store on uneven ground

If trusses are stored horizontally, blocking should be used on eight to ten foot centers, or as required, to minimize lateral bending and moisture gain.

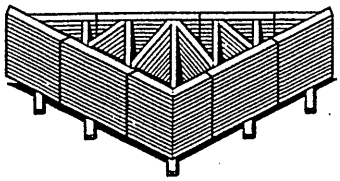

Care should be exercised when removing banding to avoid damaging trusses.

During long term storage, trusses shall be protected from the environment in a manner that provides for adequate ventilation of the trusses. If tarpaulins or other material is used, the ends shall be left open for ventilation. Plastic is not recommended, since it can trap moisture.

3 Hoisting

All trusses that are erected one at a time shall be held safely in position by the erection equipment until such time as all necessary bracing has been installed and the ends of the trusses are securely fastened to the building.

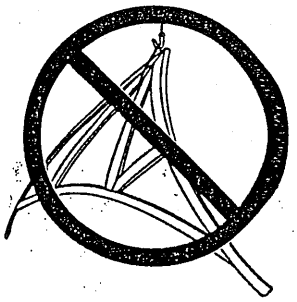

Avoid lateral bending

L ≤ 30'

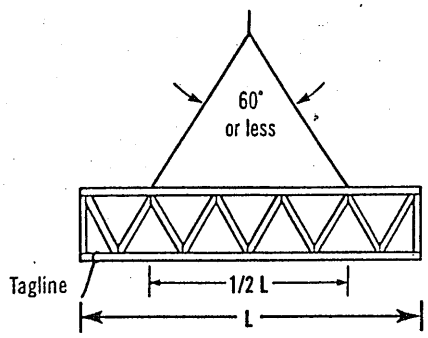

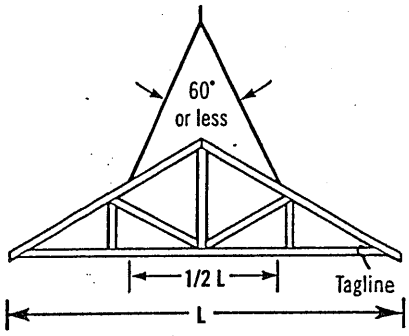

Truss sling is acceptable where these criteria are met.

30' < L ≤ 60'

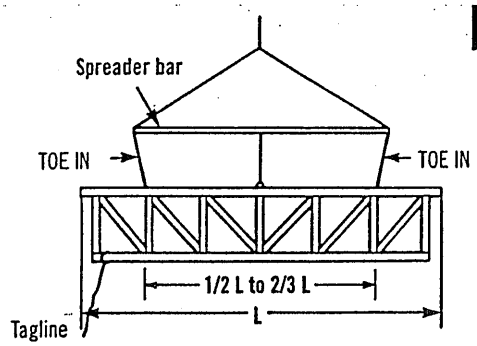

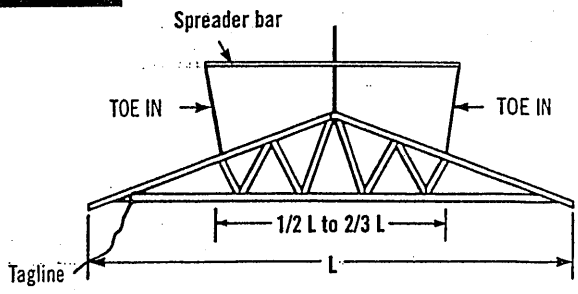

Use spreader bar in all other cases. It should be noted that the lines from the ends of the spreader bar "**TOE IN**"; if these lines should "**TOE OUT**" the truss may fold in half.

L > 60'

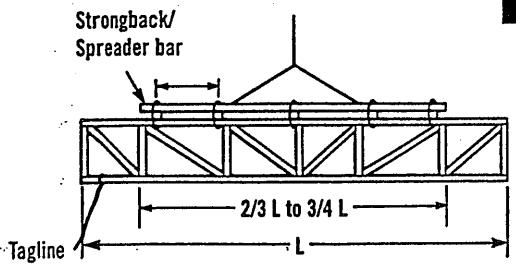

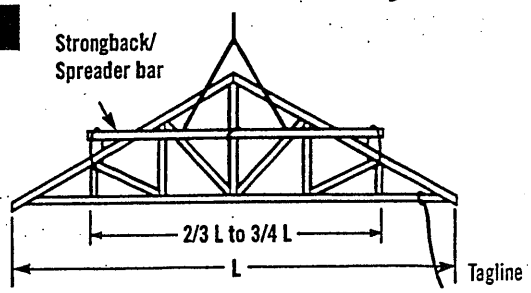

For lifting trusses with spans in excess of 60 feet, it is recommended that a strongback/spreader bar be used as illustrated. The strongback/spreader bar should be attached to the top chord and web members at intervals of approximately 10 feet. Further, the strongback/spreader bar should be at or above the mid-height of the truss to prevent overturning. The strongback/spreader bar can be of any material with sufficient strength to safely carry the weight of the truss and sufficient rigidity to adequately resist bending of the truss.

4 Beginning the Erection Process

It is important for the builder or erection contractor to provide substantial bracing for the first truss erected. The two or more trusses making up the rest of the first set are tied to and rely upon the first truss for stability. Likewise, after this first set of trusses is adequately cross-braced, the remaining trusses installed rely upon this first set for stability. Thus, the performance of the truss bracing system depends to a great extent on how well the first group of trusses is braced.

Ground Brace – Exterior

One satisfactory method ties the first unit of trusses off to a series of braces that are attached to a stake driven into the ground and securely anchored. The ground brace itself should be supported as shown below or it is apt to buckle. Additional ground braces in the opposite direction, inside the building, are also recommended.

Ground Brace – Interior

Another satisfactory method where height of building or ground conditions prohibit bracing from the exterior is to tie the first truss rigidly in place from the interior at the floor level, provided the floor is substantially completed and capable of supporting the ground bracing forces. Securely fasten the first truss to the middle of the building. Brace the bracing similar to exterior ground bracing shown at left. Set trusses from the middle toward the end of the building. Properly cross-brace the first set of trusses before removing floor braces and setting remaining trusses.

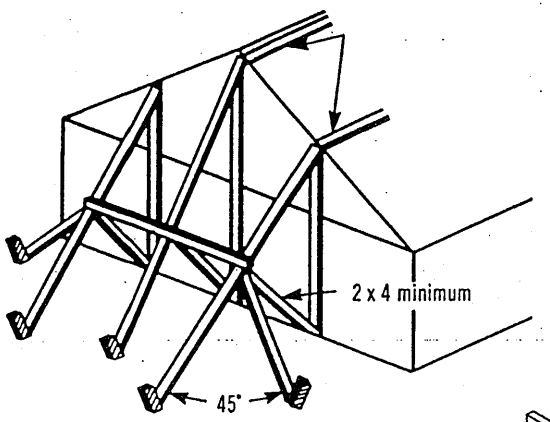

Note: Locate ground braces for first truss directly in line with all rows of top chord continuous lateral bracing (either temporary or permanent).

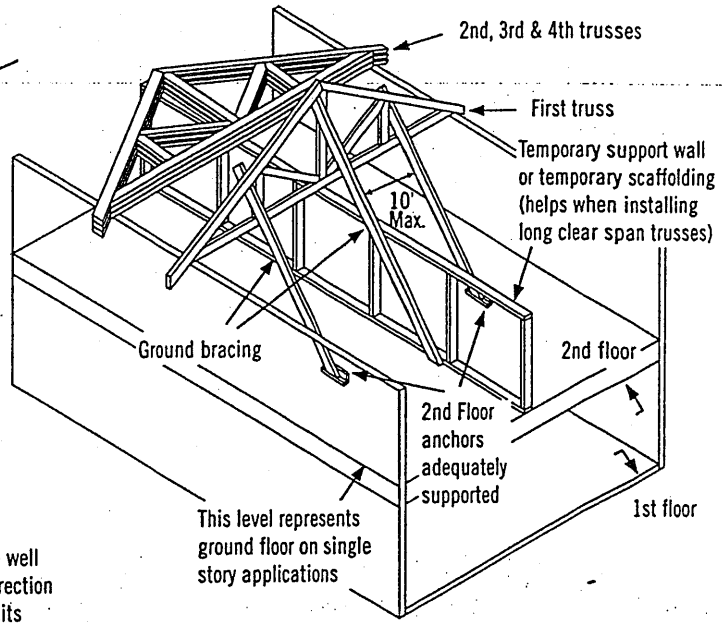

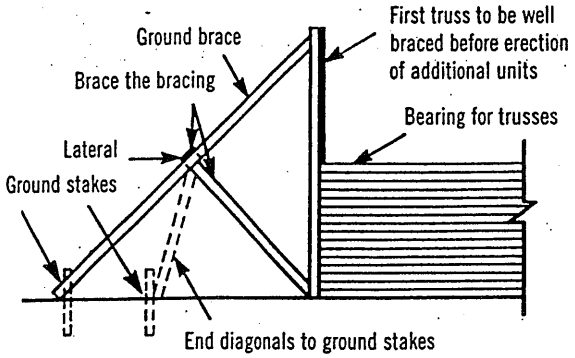

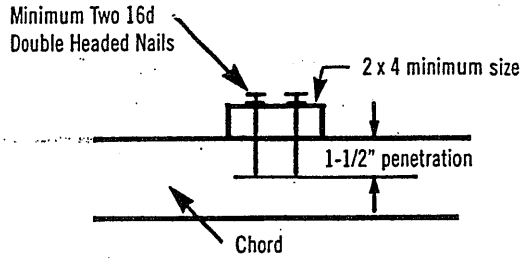

Inadequate size of bracing material or inadequate fastening is a major cause of erection dominoing.

5 Erection Tolerance

Complying with erection tolerances is critical to achieving an acceptable roof or floor line, and to accomplishing effective bracing. Setting trusses within tolerance the first time will prevent the need for the hazardous practice of respacing or adjusting trusses when roof sheathing or roof purlins are installed. Trusses leaning or bowing can cause nails to miss the top chords when sheathing is applied, and create cumulative stresses on the bracing, which is a frequent cause of dominoing.

When sheathing, make sure nails are driven into the top chord of the trusses.

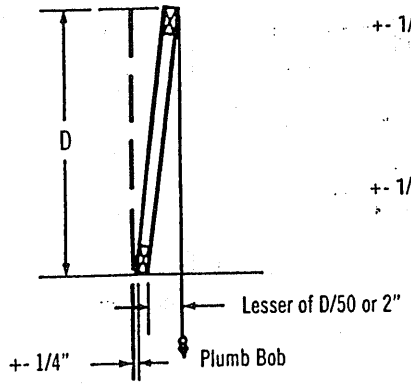

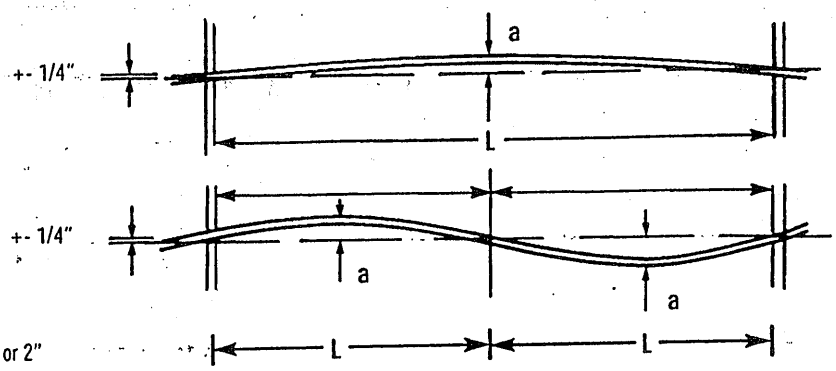

L = 16' to 32', a = 1"
L = 32' & over, a = 2"

6 Bracing

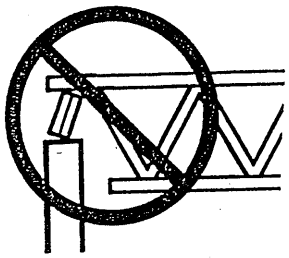

Do not install trusses on temporarily connected supports

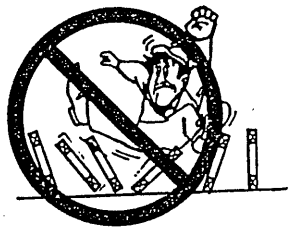

Do not walk on unbraced trusses

Do not walk on trusses or gable ends lying flat

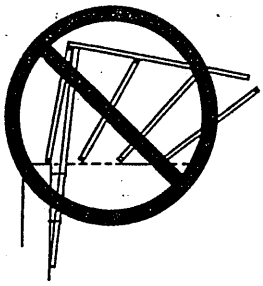

Nails in withdrawal (parallel to force)

All anchors, hangers, tie-downs, seats, bearing ledgers, etc., that are part of the supporting structure shall be accurately and properly placed and permanently attached before truss installation begins. No trusses shall ever be installed on anchors or ties that have temporary connections to the supporting structure.

Nailing scabs to the end of the building to brace the first truss is not recommended.
All nailing of bracing should be done so that nails are driven perpendicular to the direction of force, as shown at right.

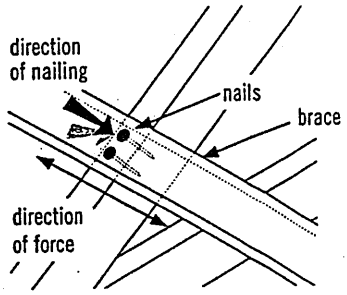

Well nailed (perpendicular to force)

7 Bracing Requirements for 3 Planes of Roof

Temporary erection bracing must be applied to three planes of the roof system to ensure stability: Plane 1) **Top Chord** (sheathing), Plane 2) **Bottom Chord** (ceiling plane), and Plane 3) **Web Member** plane or vertical plane perpendicular to trusses.

1) Top Chord Plane

Most important to the builder or erection contractor is bracing in the plane of the top chord. Truss top chords are susceptible to lateral buckling before they are braced or sheathed.

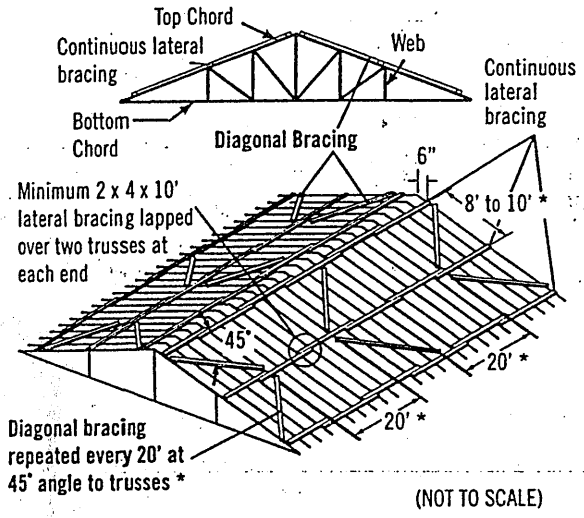

(NOT TO SCALE)

Exact spacing between trusses should be maintained as bracing is installed to avoid the hazardous practice of removing bracing to adjust spacing. This act of "adjusting spacing" can cause trusses to topple if connections are removed at the wrong time.

2) Bottom Chord Plane

In order to hold proper spacing on the bottom chord, temporary bracing is recommended on the top of the bottom chord.

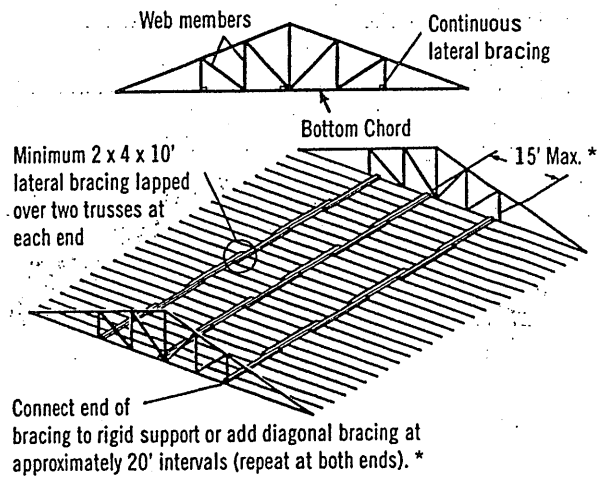

* Long spans, heavy loads or other spacing configurations may require closer spacing between lateral bracing and closer intervals between diagonals. Consult the building designer or HIB and DSB (*Recommended Design Specification for Temporary Bracing of Metal-Plate Connected Wood Trusses*) for details.

Diagonal or cross-bracing is very important!

3) Web Member Plane

"X" bracing, as shown, is critical in preventing trusses from leaning or dominoing. Repeat as shown to create a succession of rigid units.

X-bracing should be installed on vertical web members wherever possible, at or near lateral bracing. Plywood or OSB may be substituted for X-bracing.

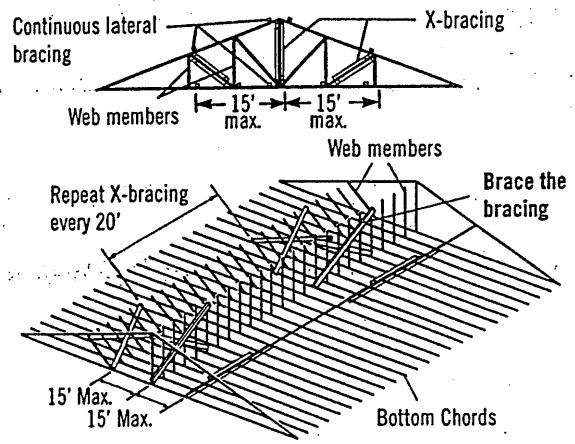

Note: Top chords and some web members are not shown, in order to make drawings more readable.

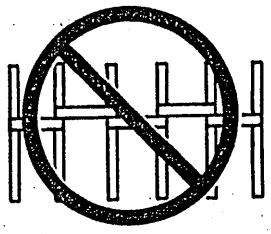

Do not use short blocks to brace individual trusses without a specific bracing plan detailing their use

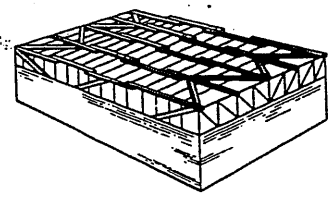

Bracing requirements using the same principles apply to parallel chord trusses

8 Stacking Materials

Do not proceed with building completion until all bracing is securely and properly in place

Never stack materials on unbraced or inadequately braced trusses

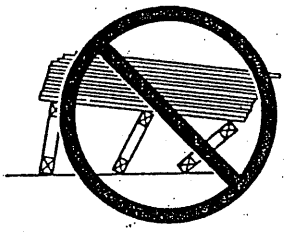

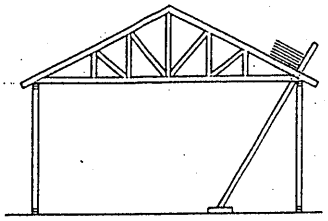

Proper distribution of construction materials is a must during construction.

Never stack materials near a peak

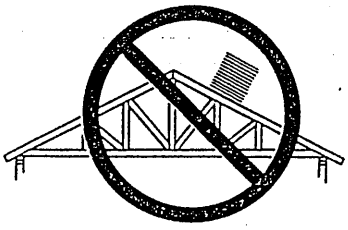

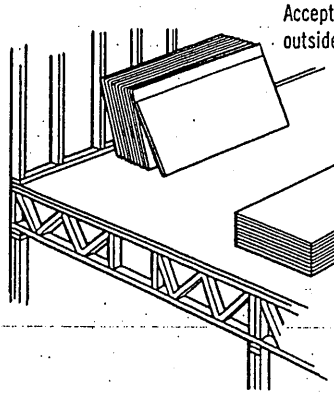

Never stack materials on the cantilever of a truss

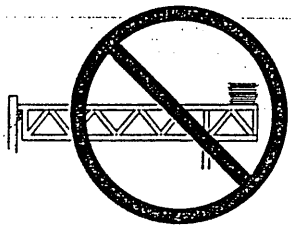

Always stack materials over two or more trusses.

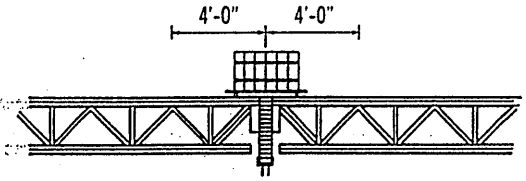

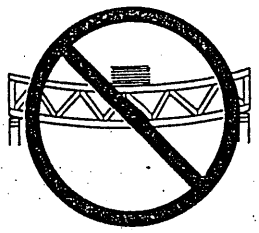

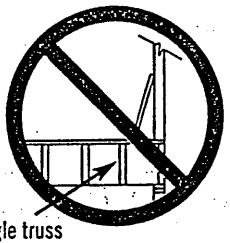

Roofing and mechanical contractors are cautioned to stack materials only along outside supporting members or directly over inside supporting members. Trusses are not designed for dynamic loads (i.e., moving vehicles). Extreme care should be taken when loading and stacking construction materials (rolled roofing, mechanical equipment, etc.) on the roof or floor system.

Never overload small groups or single trusses. Position load over as many trusses as possible.

Never cut any structural member of a truss.

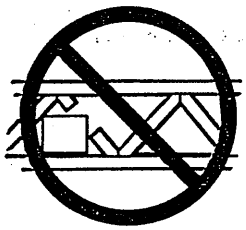

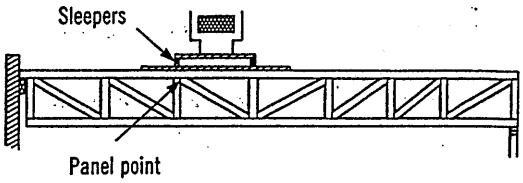

Sleepers for mechanical equipment should be located at panel points (joints) or over main supporting members, and only on trusses that have been designed for such loads.

Caution Notes

Errors in building lines and/or dimensions, or errors by others shall be corrected by the contractor or responsible construction trade subcontractor or supplier **before** erection of trusses begins.

Cutting of nonstructural overhangs is considered a part of normal erection and shall be done by the builder or erection contractor.

Any field modification that involves the cutting, drilling, or relocation of any structural truss member or connector plate shall not be done without the approval of the truss manufacturer or a licensed design professional.

The methods and procedures outlined are intended to ensure that the overall construction techniques employed will put floor and roof trusses **safely** in place in a completed structure. These recommendations for bracing wood trusses originate from the collective experience of leading technical personnel in the wood truss industry, but must, due to the nature of responsibilities involved, be presented only as a **guide** for use by a qualified building designer, builder, or erection contractor. Thus, the Wood Truss Council of America expressly disclaims any responsibility for damages arising from the use, application, or reliance on the recommendations and information contained herein.

[Selected text and figures referenced or reproduced from HIB and DSB by permission of the Truss Plate Institute, Madison, WI.]

THE CANADIAN WOOD TRUSS ASSOCIATION

L'ASSOCIATION CANADIENNE DES FABRICANTS DE FERMES DE BOIS

1400 Blair Place, Suite 210, Ottawa, ON K1J 9B8
Tel.: 613-747-5544 Fax: 613-747-6264

Wood Truss Council of America

One WTCA Center
6300 Enterprise Lane, Madison, WI 53719-1140
Tel.: 608-274-4849 Fax: 608-274-3329
wtca@woodtruss.com www.woodtruss.com