ALPA-BARRIE

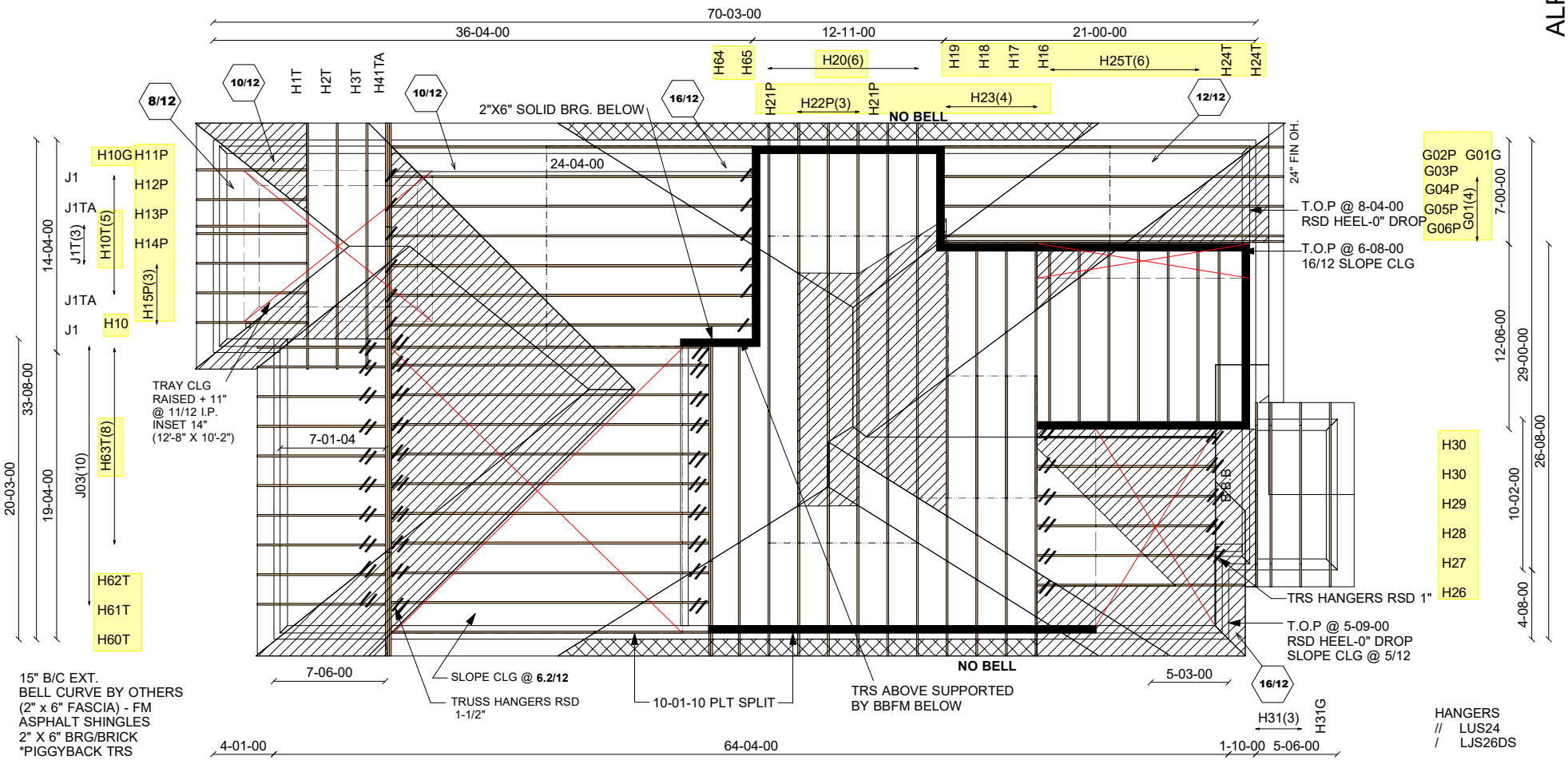

15" B/C EXT.
BELL CURVE BY OTHERS
(2" x 6" FASCIA) - FM
ASPHALT SHINGLES
2" X 6" BRG/BRICK
*PIGGYBACK TRS
PURLINS BY OTHERS

LOFT WALLS
SUPPORTED BY OTHERS

HANGERS
// LUS24
/ LJS26DS

E20035261 - E20035263
E20035265 - E20035267
E20035334 - E20035337

E22052734 - E22052769

Mitek V. 8.2.0

ALL CONVENTIONAL FRAMING TO CONFORM WITH PART 9 O.B.C. LATEST EDITION. ROOF RAFTERS THAT CROSS OVER TRUSSES TO BE 2X4 SPF #2 @ 24" O.C WITH A VERT. POST TO THE TRUSS UNDERNEATH AT EACH CROSS POINT. VERT. POSTS LONGER THAN 6' TO HAVE LATERAL BRACING SO THAT THE DISTANCE BETWEEN END POINTS & BETWEEN ROWS OF BRACING DOES NOT EXCEED 6'

CONVENTIONAL FRAMING BY OTHERS

Job Track: 45147	Builder / Location: GOLD PARK HOMES / VAUGHAN		Model / Elevation: **"MAPLEWOOD"** 4201 REV4 / B OPT TRAY
Layout ID: 343176	Project: PINE VALLEY PH 2		THESE DRAWINGS CONSTITUTE THE PROPERTY OF ALPA ROOF TRUSSES INC., SHALL NOT BE REPRODUCED, PUBLISHED, OR REDISTRIBUTED IN ANY MANNER OR UTILIZED FOR ANY PURPOSE OTHER THAN THE MANUFACTURE OF TRUSSES BY ALPA ROOF TRUSSES INC AND WILL BE RETRACTED BY ALPA ROOF TRUSSES INC IF UTLILZED FOR ANY OTHER PURPOSE.
Plan Log: 116404	Date: 2022-04-04	Designer: AMANDA	REF: 318405

EWP DESIGN INC.

(905) 832-2250 FAX (905) 832-0286

RESPONSIBILITIES AND SPECIFICATIONS

RESPONSIBILITIES

1. EWP DESIGN INC. is responsible for the design of trusses as individual components.
2. It is the responsibility of others to ascertain that the design loads utilized on each drawing meet or exceed the actual dead load imposed by the structure, the live load imposed by the intended use and the snow load imposed by local building code or authorities with jurisdictions.
3. All dimensions are to be verified by the owner, contractor, architect or other authorities with jurisdictions before truss fabrication.
4. EWP DESIGN INC. bears no responsibility for the erection of trusses. Persons erecting trusses are cautioned to seek professional advice regarding the temporary and permanent bracing for the system. Bracing shown on EWP DESIGN INC. drawing is specified for the truss as a component only and forms an integral part of the truss design.
5. It is the truss manufacturer's responsibility to ensure that trusses are manufactured in conformance with specifications of EWP DESIGN INC. as outlined below.

SPECIFICATIONS

1. Trusses designed by EWP DESIGN INC. conform to the relevant section of the Ontario Building Code of Canada (Part 9 or Part 4) or to the Canadian code for farm buildings, whichever applies to the building type, as indicated on the EWP DESIGN INC. drawings, and conform to the design procedures established by the Truss Plate Institute of Canada. Unit stresses used for truss designs are as per the edition of CSA-O86 shown on EWP DESIGN INC. drawings.
2. Lumber is to be the size, species and grade as specified on EWP DESIGN INC. drawings.
3. Moisture content of lumber shall not exceed 19% in service unless specified otherwise.
4. Metal connector plates shall be applied to both faces of truss at each joint and shall be positioned as specified.
5. Top chords of trusses are assumed to be continuously braced laterally by roof sheathing or by purlins at intervals not exceeding 12.5 times the thickness of top chord member.
6. Bottom chords shall be laterally braced at intervals not exceeding 3M (10') o.c., where rigid ceiling is not applied directly to the underside of chords.

THESE DRAWINGS CONSTITUTE THE PROPERTY OF EWP DESIGN INC., SHALL NOT BE REPRODUCED, PUBLISHED, OR REDISTRIBUTED IN ANY MANNER OR UTILIZED FOR ANY PURPOSE OTHER THAN THE MANUFACTURE OF TRUSSES BY THE ALPA LUMBER GROUP, AND WILL BE RETRACTED BY EWP DESIGN INC. IF UTILIZED FOR ANY OTHER PURPOSE.

JOB NAME	TRUSS NAME	QUANTITY	PLY	JOB DESC.	DRWG NO.
318401	H1T		1	TRUSS DESC. JT 45147	E20035261

Alpa Roof Truss, Maple

Version 8.310 S Oct 29 2019 MiTek Industries, Inc. Tue Mar 24 13:27:03 2020 Page 1

ID:MF8iiriaTok7DlbpT4B71Xys4PG-c6eIAYx3Lc0qorpuDl m25?Z72h5T9l81BnFUFzXjqM

Scale = 1:29.3

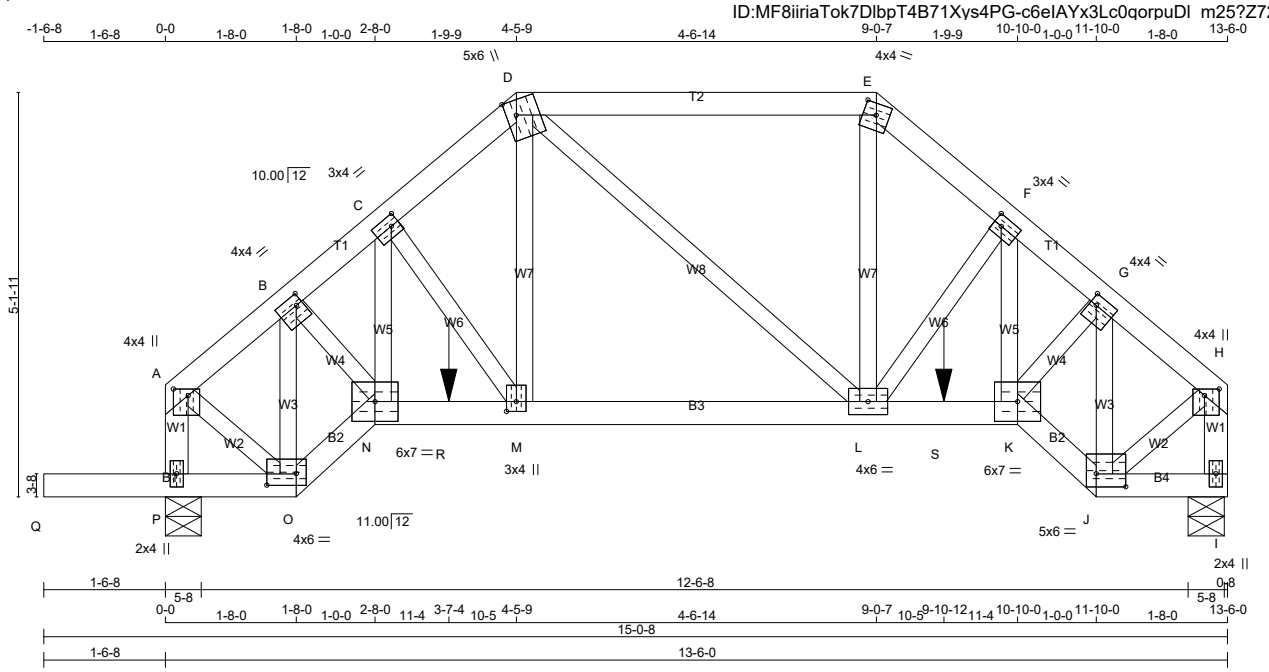

TOTAL WEIGHT = 67 lb

[M]

LUMBER

N. L. G. A. RULES

CHORDS	SIZE		LUMBER	DESCR.
A - D	2x4	DRY	No.2	SPF
D - E	2x4	DRY	No.2	SPF
E - H	2x4	DRY	No.2	SPF
P - A	2x4	DRY	No.2	SPF
I - H	2x4	DRY	No.2	SPF
Q - O	2x4	DRY	No.2	SPF
O - N	2x4	DRY	No.2	SPF
N - K	2x4	DRY	No.2	SPF
K - J	2x4	DRY	No.2	SPF
J - I	2x4	DRY	No.2	SPF
ALL WEBS EXCEPT	2x3	DRY	No.2	SPF

DRY: SEASONED LUMBER.

PLATES (table is in inches)

JT	TYPE	PLATES	W	LEN	Y	X
A	TMVW+p	MT20	4.0	4.0	1.00	2.25
B	TMWW-t	MT20	4.0	4.0	1.50	1.00
C	TMWW-t	MT20	3.0	4.0	1.50	1.25
D	TTWW+m	MT20	5.0	6.0	2.25	1.50
E	TTW-m	MT20	4.0	4.0	1.75	2.00
F	TMWW-t	MT20	3.0	4.0	1.50	1.25
G	TMWW-t	MT20	4.0	4.0	1.50	1.00
H	TMVW+p	MT20	4.0	4.0	1.00	2.25
I	BMV1+p	MT20	2.0	4.0		
J	BBWW-l	MT20	5.0	6.0	2.00	4.50
K	BBWW-l	MT20	6.0	7.0		
L	BMWWW-t	MT20	4.0	6.0		
M	BMWW+t	MT20	3.0	4.0	1.50	1.50
N	BBWW-l	MT20	6.0	7.0		
O	BBWW-l	MT20	4.0	6.0	1.75	4.50
P	BMV1+p	MT20	2.0	4.0		

LATERAL BRACE(S) SHOWN SHALL BE 2X4 SPF#2

DIMENSIONS, SUPPORTS AND LOADINGS SPECIFIED BY FABRICATOR TO BE VERIFIED BY BUILDING DESIGNER

BEARINGS

JT	FACTORED GROSS REACTION VERT	HORZ	MAXIMUM FACTORED GROSS REACTION DOWN	HORZ	UPLIFT	INPUT BRG IN-SX	REQRD BRG IN-SX
I	1436	0	1436	0	0	5-8	2-2
P	1602	0	1602	0	0	5-8	2-6

UNFACTORED REACTIONS

JT	1ST LCASE COMBINED	MAX./MIN. COMPONENT REACTIONS SNOW	LIVE	PERM.LIVE	WIND	DEAD	SOIL
I	1022	635 / 0	0 / 0	0 / 0	0 / 0	387 / 0	0 / 0
P	1140	707 / 0	0 / 0	0 / 0	0 / 0	433 / 0	0 / 0

BEARING MATERIAL TO BE SPF NO.2 OR BETTER AT JOINT(S) I, P

BRACING

TOP CHORD TO BE SHEATHED OR MAX. PURLIN SPACING = 4.82 FT.
MAX. UNBRACED BOTTOM CHORD LENGTH = 10.00 FT OR RIGID CEILING DIRECTLY APPLIED.

ALL PITCH BREAKS AND PERIMETER CORNER JOINTS MUST BE LATERALLY RESTRAINED.

LOADING

TOTAL LOAD CASES: (4)

CHORDS

MEMB. FR-TO	FORCE (LBS)	FACTORED VERT. LOAD (PLF) FROM	TO	LC1	MAX CSI (LC)	MAX. UNBRAC LENGTH
A- B	-1143 / 0	-78.0	-78.0	0.06 (1)	5.87	
B- C	-1833 / 0	-78.0	-78.0	0.08 (1)	4.86	
C- D	-1648 / 0	-78.0	-78.0	0.09 (1)	5.07	
D- E	-1296 / 0	-78.0	-78.0	0.35 (1)	5.21	
E- F	-1663 / 0	-78.0	-78.0	0.09 (1)	5.05	
F- G	-1871 / 0	-78.0	-78.0	0.09 (1)	4.82	
G- H	-1188 / 0	-78.0	-78.0	0.07 (1)	5.77	
P- A	-1353 / 0	0.0	0.0	0.15 (1)	6.94	
I- H	-1405 / 0	0.0	0.0	0.16 (1)	6.84	
Q- P	0 / 0	-96.5	-96.5	0.17 (1)	10.00	
P- O	-1 / 0	-37.2	-37.2	0.17 (1)	10.00	
O- N	0 / 1106	-37.2	-37.2	0.20 (1)	10.00	
N- R	0 / 1399	-37.3	-37.3	0.50 (1)	10.00	
R- M	0 / 1399	-112.0	-112.0	0.50 (1)	10.00	
M- L	0 / 1283	-112.0	-112.0	0.49 (1)	10.00	
L- S	0 / 1427	-112.0	-112.0	0.52 (1)	10.00	
S- K	0 / 1427	-37.2	-37.2	0.52 (1)	10.00	
K- J	0 / 1154	-37.2	-37.2	0.21 (1)	10.00	
J- I	0 / 0	-37.3	-37.3	0.03 (4)	10.00	

WEBS

MEMB. FR-TO	FORCE (LBS)	MAX CSI (LC)
O- B	-1323 / 0	0.24 (1)
B- N	0 / 978	0.24 (1)
N- C	0 / 192	0.05 (1)
C- M	-236 / 0	0.05 (1)
M- D	0 / 805	0.20 (1)
D- L	0 / 16	0.00 (1)
L- E	0 / 826	0.20 (1)
L- F	-263 / 0	0.05 (1)
K- F	0 / 227	0.06 (1)
K- G	0 / 968	0.24 (1)
J- G	-1309 / 0	0.24 (1)
A- O	0 / 1035	0.26 (1)
J- H	0 / 1076	0.27 (1)

FACTORED CONCENTRATED LOADS (LBS)

JT	LOC.	LC1	MAX-	MAX+	FACE	DIR.	TYPE	HEEL	CONN.
R	3-7-4	-432	-432	---	FRONT	VERT	TOTAL	---	C1
S	9-10-12	-432	-432	---	FRONT	VERT	TOTAL	---	C1

CONNECTION REQUIREMENTS

1) **C1:** A SUITABLE HANGER/MECHANICAL CONNECTION IS REQUIRED.

DESIGN CRITERIA

*** SPECIAL LOADS ANALYSIS ***
GEOMETRY AND/OR BASIC LOADS CHANGED BY USER.
LOADS WERE DERIVED FROM USER INPUT
NO FURTHER MODIFICATIONS WERE MADE

SPECIFIED LOADS:

TOP	CH.	LL	=	21.0	PSF
		DL	=	6.0	PSF
BOT	CH.	LL	=	0.0	PSF
		DL	=	7.4	PSF
TOTAL	LOAD		=	34.4	PSF

SPACING = 24.0 IN. C/C

LOADING IN FLAT SECTION BASED ON A SLOPE OF 2.00/12 MINIMUM

GIRDER TYPE: CStdGirder
START DISTANCE = 3-7-4
START SPAN CARRIED = 5-10-8
END DISTANCE = 9-10-12
END SPAN CARRIED = 5-10-8
END WALL WIDTH = 0-0
APPLIED TO FRONT SIDE OF BOTTOM CHORD.
- ADDT'L LOADS BASED ON 55 % OF GSL.

*** NON STANDARD GIRDER ***
ADDT'L USER-DEFINED LOADS APPLIED TO ALL LOAD CASES.

THIS TRUSS IS DESIGNED FOR RESIDENTIAL OR SMALL BUILDING REQUIREMENTS OF PART 9, NBCC 2015

THIS DESIGN COMPLIES WITH:
- PART 9 OF BCBC 2018 , ABC 2019
- PART 9 OF OBC 2012 (2019 AMENDMENT)
- CSA 086-14
- TPIC 2014

DESIGN ASSUMPTIONS
-OVERHANG NOT TO BE ALTERED OR CUT OFF.

(55 % OF 23.0 P.S.F. G.S.L. PLUS 8.4 P.S.F. RAIN LOAD) EQUALS 21.0 P.S.F. SPECIFIED ROOF LIVE LOAD

ALLOWABLE DEFL.(LL)= L/360 (0.45")
CALCULATED VERT. DEFL.(LL) = L/ 999 (0.04")
ALLOWABLE DEFL.(TL)= L/360 (0.45")
CALCULATED VERT. DEFL.(TL) = L/ 999 (0.08")

CANTILEVER DEFLECTION:
ALLOWABLE DEFL.(LL)= L/120 (0.19")
CALCULATED VERT. DEFL.(LL) = L/ 999 (0.00")
ALLOWABLE DEFL.(TL)= L/120 (0.19")
CALCULATED VERT. DEFL.(TL) = L/ 999 (0.01")

CSI: TC=0.35/1.00 (D-E:1) , BC=0.52/1.00 (K-L:1) , WB=0.27/1.00 (H-J:1) , SSI=0.34/1.00 (K-L:1)

DOL LUMBER=1.00 NAIL=1.00 LS BEND=1.00 COMP=1.00 SHEAR=1.00 TENS= 1.00

COMPANION LIVE LOAD FACTOR = 1.00

CONTINUED ON PAGE 2

JOB NAME	TRUSS NAME	QUANTITY	PLY	JOB DESC.	DRWG NO.
318401	H2T		1	TRUSS DESC. JT 45147	E20035262

Alpa Roof Truss, Maple

Version 8.310 S Oct 29 2019 MiTek Industries, Inc. Tue Mar 24 13:27:04 2020 Page 1

ID:MF8iiriaTok7DlbpT4B71Xys4PG-4lChNuyh6w8hP?N4nSV?aIYonS70CfaIGrXo1hzXjgL

Scale = 1:36.2

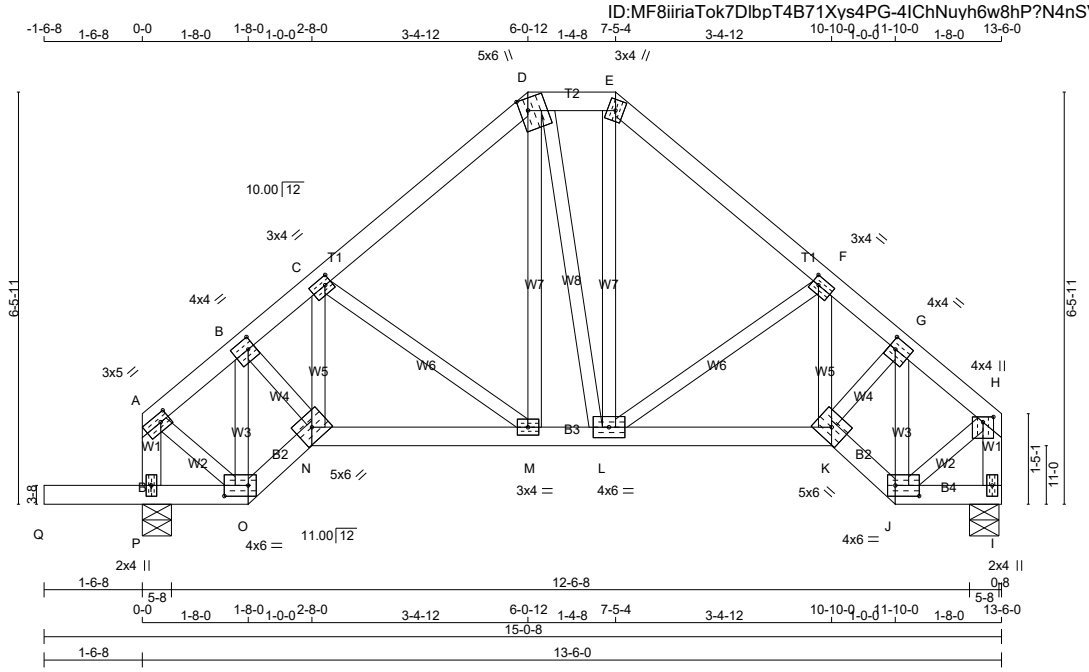

TOTAL WEIGHT = 72 lb

[M][F]

LUMBER

N. L. G. A. RULES

CHORDS	SIZE		LUMBER	DESCR.
A - D	2x4	DRY	No.2	SPF
D - E	2x4	DRY	No.2	SPF
E - H	2x4	DRY	No.2	SPF
P - A	2x4	DRY	No.2	SPF
I - H	2x4	DRY	No.2	SPF
Q - O	2x4	DRY	No.2	SPF
O - N	2x4	DRY	No.2	SPF
N - K	2x4	DRY	No.2	SPF
K - J	2x4	DRY	No.2	SPF
J - I	2x4	DRY	No.2	SPF
ALL WEBS EXCEPT	2x3	DRY	No.2	SPF

DRY: SEASONED LUMBER.

PLATES (table is in inches)

JT	TYPE	PLATES	W	LEN	Y	X
A	TMVW-t	MT20	3.0	5.0	1.50	1.75
B	TMWW-t	MT20	4.0	4.0	2.00	1.25
C	TMWW-t	MT20	3.0	4.0	1.50	1.25
D	TTWW+m	MT20	5.0	6.0	2.25	1.50
E	TTW+m	MT20	3.0	4.0		
F	TMWW-t	MT20	3.0	4.0	1.50	1.25
G	TMWW-t	MT20	4.0	4.0	2.00	1.25
H	TMVW+p	MT20	4.0	4.0	1.00	2.00
I	BMV1+p	MT20	2.0	4.0		
J	BBWW-l	MT20	4.0	6.0	2.00	4.50
K	BBWW-h	MT20	5.0	6.0		
L	BMWWW-t	MT20	4.0	6.0		
M	BMWW-t	MT20	3.0	4.0		
N	BBWW-h	MT20	5.0	6.0		
O	BBWW-l	MT20	4.0	6.0	2.00	4.50
P	BMV1+p	MT20	2.0	4.0		

LATERAL BRACE(S) SHOWN SHALL BE 2X4 SPF#2

DIMENSIONS, SUPPORTS AND LOADINGS SPECIFIED BY FABRICATOR TO BE VERIFIED BY BUILDING DESIGNER

BEARINGS

JT	FACTORED GROSS REACTION VERT	HORZ	MAXIMUM FACTORED GROSS REACTION DOWN	HORZ	UPLIFT	INPUT BRG IN-SX	REQRD BRG IN-SX
I	643	0	643	0	0	5-8	1-8
P	808	0	808	0	0	5-8	1-8

UNFACTORED REACTIONS

JT	1ST LCASE COMBINED	MAX./MIN. COMPONENT REACTIONS SNOW	LIVE	PERM.LIVE	WIND	DEAD	SOIL
I	458	280 / 0	0 / 0	0 / 0	0 / 0	179 / 0	0 / 0
P	576	352 / 0	0 / 0	0 / 0	0 / 0	225 / 0	0 / 0

BEARING MATERIAL TO BE SPF NO.2 OR BETTER AT JOINT(S) I, P

BRACING

TOP CHORD TO BE SHEATHED OR MAX. PURLIN SPACING = 6.25 FT.
MAX. UNBRACED BOTTOM CHORD LENGTH = 10.00 FT OR RIGID CEILING DIRECTLY APPLIED.

ALL PITCH BREAKS AND PERIMETER CORNER JOINTS MUST BE LATERALLY RESTRAINED.

LOADING

TOTAL LOAD CASES: (4)

CHORDS

MEMB. FR-TO	MAX. FACTORED FORCE (LBS)	FACTORED VERT. LOAD LC1 (PLF) FROM	TO	MAX CSI (LC)	MAX. UNBRAC LENGTH
A- B	-454 / 0	-78.0	-78.0	0.03 (1)	6.25
B- C	-706 / 0	-78.0	-78.0	0.08 (1)	6.25
C- D	-539 / 0	-78.0	-78.0	0.10 (1)	6.25
D- E	-409 / 0	-78.0	-78.0	0.02 (1)	6.25
E- F	-544 / 0	-78.0	-78.0	0.10 (1)	6.25
F- G	-744 / 0	-78.0	-78.0	0.08 (1)	6.25
G- H	-500 / 0	-78.0	-78.0	0.04 (1)	6.25
P- A	-575 / 0	0.0	0.0	0.06 (1)	7.81
I- H	-627 / 0	0.0	0.0	0.06 (1)	7.81
Q- P	0 / 0	-96.5	-96.5	0.16 (1)	10.00
P- O	-1 / 0	-18.5	-18.5	0.12 (1)	10.00
O- N	0 / 436	-18.5	-18.5	0.07 (1)	10.00
N- M	0 / 575	-18.5	-18.5	0.12 (1)	10.00
M- L	0 / 405	-18.5	-18.5	0.10 (1)	10.00
L- K	0 / 603	-18.5	-18.5	0.13 (1)	10.00
K- J	0 / 484	-18.5	-18.5	0.08 (1)	10.00
J- I	0 / 0	-18.5	-18.5	0.02 (4)	10.00

WEBS

MEMB. FR-TO	MAX. FACTORED FORCE (LBS)	MAX CSI (LC)
O- B	-559 / 0	0.09 (1)
B- N	0 / 419	0.09 (1)
N- C	0 / 35	0.01 (4)
C- M	-215 / 0	0.06 (1)
M- D	0 / 161	0.04 (1)
D- L	0 / 17	0.00 (1)
L- E	0 / 181	0.04 (1)
L- F	-244 / 0	0.07 (1)
K- F	0 / 49	0.02 (4)
K- G	0 / 409	0.09 (1)
J- G	-545 / 0	0.09 (1)
A- O	0 / 410	0.09 (1)
J- H	0 / 451	0.10 (1)

DESIGN CRITERIA

SPECIFIED LOADS:

TOP	CH.	LL =	21.0	PSF
		DL =	6.0	PSF
BOT	CH.	LL =	0.0	PSF
		DL =	7.4	PSF
TOTAL	LOAD	=	34.4	PSF

SPACING = 24.0 IN. C/C

LOADING IN FLAT SECTION BASED ON A SLOPE OF 2.00/12 MINIMUM

THIS TRUSS IS DESIGNED FOR RESIDENTIAL OR SMALL BUILDING REQUIREMENTS OF PART 9, NBCC 2015

THIS DESIGN COMPLIES WITH:
- PART 9 OF BCBC 2018 , ABC 2019
- PART 9 OF OBC 2012 (2019 AMENDMENT)
- CSA 086-14
- TPIC 2014

DESIGN ASSUMPTIONS
-OVERHANG NOT TO BE ALTERED OR CUT OFF.

(55 % OF 23.0 P.S.F. G.S.L. PLUS 8.4 P.S.F. RAIN LOAD) EQUALS 21.0 P.S.F. SPECIFIED ROOF LIVE LOAD

ALLOWABLE DEFL.(LL)= L/360 (0.45")
CALCULATED VERT. DEFL.(LL) = L/ 999 (0.01")
ALLOWABLE DEFL.(TL)= L/360 (0.45")
CALCULATED VERT. DEFL.(TL) = L/ 999 (0.03")

CANTILEVER DEFLECTION:
ALLOWABLE DEFL.(LL)= L/120 (0.19")
CALCULATED VERT. DEFL.(LL) = L/ 999 (0.01")
ALLOWABLE DEFL.(TL)= L/120 (0.19")
CALCULATED VERT. DEFL.(TL) = L/ 829 (0.02")

CSI: TC=0.10/1.00 (E-F:1) , BC=0.16/1.00 (P-Q:1) , WB=0.10/1.00 (H-J:1) , SSI=0.12/1.00 (P-Q:1)

DOL LUMBER=1.00 NAIL=1.00 LS BEND=1.10 COMP=1.10 SHEAR=1.10 TENS= 1.10

COMPANION LIVE LOAD FACTOR = 1.00

TRUSS PLATE MANUFACTURER IS NOT RESPONSIBLE FOR QUALITY CONTROL IN THE TRUSS MANUFACTURING PLANT .

NAIL VALUES

PLATE	GRIP(DRY) (PSI) MAX	MIN	SHEAR (PLI) MAX	MIN	SECTION (PLI) MAX	MIN
MT20	650	371	1747	788	1987	1873

PLATE PLACEMENT TOL. = 0.250 inches

PLATE ROTATION TOL. = 5.0 Deg.

JSI GRIP= 0.80 (A) (INPUT = 0.90)
JSI METAL= 0.14 (J) (INPUT = 1.00)

JOB NAME	TRUSS NAME	QUANTITY	PLY	JOB DESC.	DRWG NO.
318401	H3T		1	TRUSS DESC. JT 45147	E20035263

Alpa Roof Truss, Maple

Version 8.310 S Oct 29 2019 MiTek Industries, Inc. Tue Mar 24 13:27:06 2020 Page 1

ID:MF8iiriaTok7DlbpT4B71Xys4PG-0qKRoazxeXOOflXTutXTqjd7HFkqgYybj90v5azXjgJ

Scale = 1:41.0

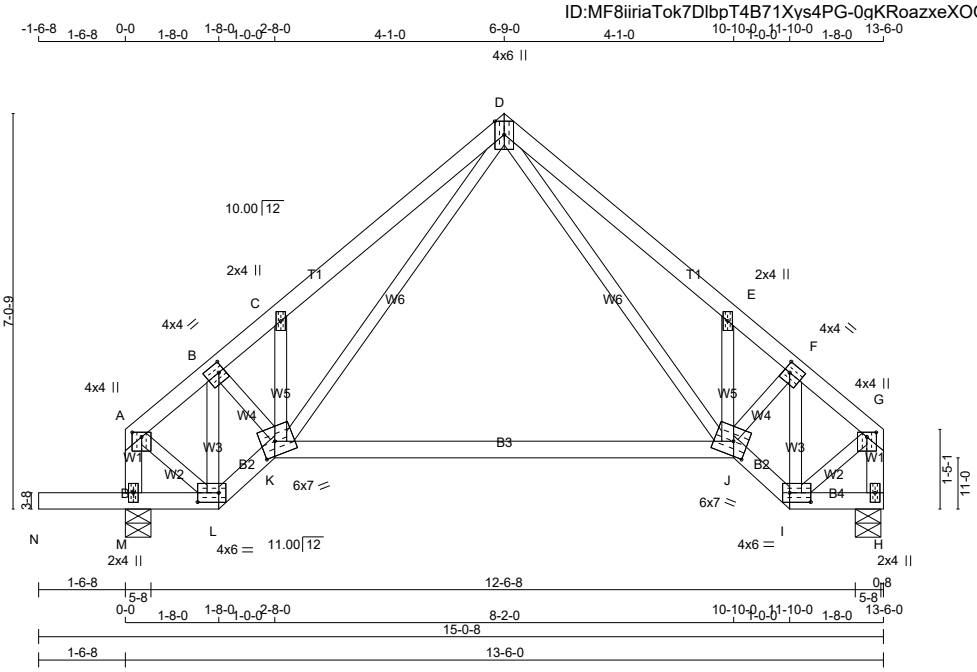

TOTAL WEIGHT = 64 lb

[M][F]

LUMBER

N. L. G. A. RULES

CHORDS	SIZE		LUMBER	DESCR.
A - D	2x4	DRY	No.2	SPF
D - G	2x4	DRY	No.2	SPF
M - A	2x4	DRY	No.2	SPF
H - G	2x4	DRY	No.2	SPF
N - L	2x4	DRY	No.2	SPF
L - K	2x4	DRY	No.2	SPF
K - J	2x4	DRY	No.2	SPF
J - I	2x4	DRY	No.2	SPF
I - H	2x4	DRY	No.2	SPF
ALL WEBS EXCEPT	2x3	DRY	No.2	SPF

DRY: SEASONED LUMBER.

PLATES (table is in inches)

JT	TYPE	PLATES	W	LEN	Y	X
A	TMVW+p	MT20	4.0	4.0	1.00	2.00
B	TMWW-t	MT20	4.0	4.0	2.00	1.25
C	TMW+w	MT20	2.0	4.0		
D	TTWW+p	MT20	4.0	6.0	Edge	
E	TMW+w	MT20	2.0	4.0		
F	TMWW-t	MT20	4.0	4.0	2.00	1.25
G	TMVW+p	MT20	4.0	4.0	1.00	2.00
H	BMV1+p	MT20	2.0	4.0		
I	BBWW-l	MT20	4.0	6.0	2.00	4.50
J	BBWWW-m	MT20	6.0	7.0	3.00	3.00
K	BBWWW-m	MT20	6.0	7.0	3.00	3.00
L	BBWW-l	MT20	4.0	6.0	2.00	4.50
M	BMV1+p	MT20	2.0	4.0		

Edge - INDICATES REFERENCE CORNER OF PLATE TOUCHES EDGE OF CHORD.

LATERAL BRACE(S) SHOWN SHALL BE 2X4 SPF#2

DIMENSIONS, SUPPORTS AND LOADINGS SPECIFIED BY FABRICATOR TO BE VERIFIED BY BUILDING DESIGNER

BEARINGS

JT	FACTORED GROSS REACTION VERT	HORZ	MAXIMUM FACTORED GROSS REACTION DOWN	HORZ	UPLIFT	INPUT BRG IN-SX	REQRD BRG IN-SX
H	643	0	643	0	0	5-8	1-8
M	808	0	808	0	0	5-8	1-8

UNFACTORED REACTIONS

JT	1ST LCASE COMBINED	MAX./MIN. COMPONENT REACTIONS SNOW	LIVE	PERM.LIVE	WIND	DEAD	SOIL
H	458	280 / 0	0 / 0	0 / 0	0 / 0	179 / 0	0 / 0
M	576	352 / 0	0 / 0	0 / 0	0 / 0	225 / 0	0 / 0

BEARING MATERIAL TO BE SPF NO.2 OR BETTER AT JOINT(S) H, M

BRACING

TOP CHORD TO BE SHEATHED OR MAX. PURLIN SPACING = 6.25 FT.
MAX. UNBRACED BOTTOM CHORD LENGTH = 10.00 FT OR RIGID CEILING DIRECTLY APPLIED.

ALL PITCH BREAKS AND PERIMETER CORNER JOINTS MUST BE LATERALLY RESTRAINED.

LOADING

TOTAL LOAD CASES: (4)

CHORDS

MEMB. FR-TO	MAX. FACTORED FORCE (LBS)	FACTORED VERT. LOAD (PLF) FROM	TO	LC1 CSI (LC)	MAX UNBRAC LENGTH
A- B	-454 / 0	-78.0	-78.0	0.03 (1)	6.25
B- C	-707 / 0	-78.0	-78.0	0.11 (1)	6.25
C- D	-791 / 0	-78.0	-78.0	0.16 (1)	6.25
D- E	-829 / 0	-78.0	-78.0	0.16 (1)	6.25
E- F	-745 / 0	-78.0	-78.0	0.11 (1)	6.25
F- G	-500 / 0	-78.0	-78.0	0.04 (1)	6.25
M- A	-575 / 0	0.0	0.0	0.06 (1)	7.81
H- G	-627 / 0	0.0	0.0	0.06 (1)	7.81
N- M	0 / 0	-96.5	-96.5	0.16 (1)	10.00
M- L	-1 / 0	-18.5	-18.5	0.12 (1)	10.00
L- K	0 / 436	-18.5	-18.5	0.07 (1)	10.00
K- J	0 / 344	-18.5	-18.5	0.39 (4)	10.00
J- I	0 / 484	-18.5	-18.5	0.08 (1)	10.00
I- H	0 / 0	-18.5	-18.5	0.02 (4)	10.00

WEBS

MEMB. FR-TO	MAX. FACTORED FORCE (LBS)	MAX CSI (LC)
D- J	0 / 484	0.11 (1)
J- E	-331 / 0	0.06 (1)
J- F	0 / 437	0.10 (1)
I- F	-545 / 0	0.09 (1)
K- D	0 / 434	0.10 (1)
K- C	-332 / 0	0.06 (1)
B- K	0 / 449	0.10 (1)
L- B	-559 / 0	0.09 (1)
A- L	0 / 410	0.09 (1)
I- G	0 / 452	0.10 (1)

DESIGN CRITERIA

SPECIFIED LOADS:

TOP	CH.	LL =	21.0	PSF
		DL =	6.0	PSF
BOT	CH.	LL =	0.0	PSF
		DL =	7.4	PSF
TOTAL	LOAD	=	34.4	PSF

SPACING = 24.0 IN. C/C

THIS TRUSS IS DESIGNED FOR RESIDENTIAL OR SMALL BUILDING REQUIREMENTS OF PART 9, NBCC 2015

THIS DESIGN COMPLIES WITH:
- PART 9 OF BCBC 2018 , ABC 2019
- PART 9 OF OBC 2012 (2019 AMENDMENT)
- CSA 086-14
- TPIC 2014

DESIGN ASSUMPTIONS
-OVERHANG NOT TO BE ALTERED OR CUT OFF.

(55 % OF 23.0 P.S.F. G.S.L. PLUS 8.4 P.S.F. RAIN LOAD) EQUALS 21.0 P.S.F. SPECIFIED ROOF LIVE LOAD

ALLOWABLE DEFL.(LL)= L/360 (0.45")
CALCULATED VERT. DEFL.(LL) = L/ 999 (0.01")
ALLOWABLE DEFL.(TL)= L/360 (0.45")
CALCULATED VERT. DEFL.(TL) = L/ 709 (0.23")

CANTILEVER DEFLECTION:
ALLOWABLE DEFL.(LL)= L/120 (0.19")
CALCULATED VERT. DEFL.(LL) = L/ 999 (0.01")
ALLOWABLE DEFL.(TL)= L/120 (0.19")
CALCULATED VERT. DEFL.(TL) = L/ 999 (0.02")

CSI: TC=0.16/1.00 (D-E:1) , BC=0.39/1.00 (J-K:4) , WB=0.11/1.00 (D-J:1) , SSI=0.12/1.00 (M-N:1)

DOL LUMBER=1.00 NAIL=1.00 LS BEND=1.10 COMP=1.10 SHEAR=1.10 TENS= 1.10

COMPANION LIVE LOAD FACTOR = 1.00

TRUSS PLATE MANUFACTURER IS NOT RESPONSIBLE FOR QUALITY CONTROL IN THE TRUSS MANUFACTURING PLANT .

NAIL VALUES

PLATE	GRIP(DRY) (PSI) MAX	MIN	SHEAR (PLI) MAX	MIN	SECTION (PLI) MAX	MIN
MT20	650	371	1747	788	1987	1873

PLATE PLACEMENT TOL. = 0.250 inches

PLATE ROTATION TOL. = 5.0 Deg.

JSI GRIP= 0.66 (K) (INPUT = 0.90)
JSI METAL= 0.18 (E) (INPUT = 1.00)

JOB NAME	TRUSS NAME	QUANTITY	PLY	JOB DESC.	DRWG NO.
318401	H41TA		3	TRUSS DESC. JT 45147	E20035265

Alpa Roof Truss, Maple

Version 8.310 S Oct 29 2019 MiTek Industries, Inc. Tue Mar 24 13:30:48 2020 Page 1

ID:MF8iiriaTok7DlbpT4B71Xys4PG-WOkMOUfBMlMvHQV8uVWXfYp1VlUthnNGmhoftizXjcr

Scale = 1:57.3

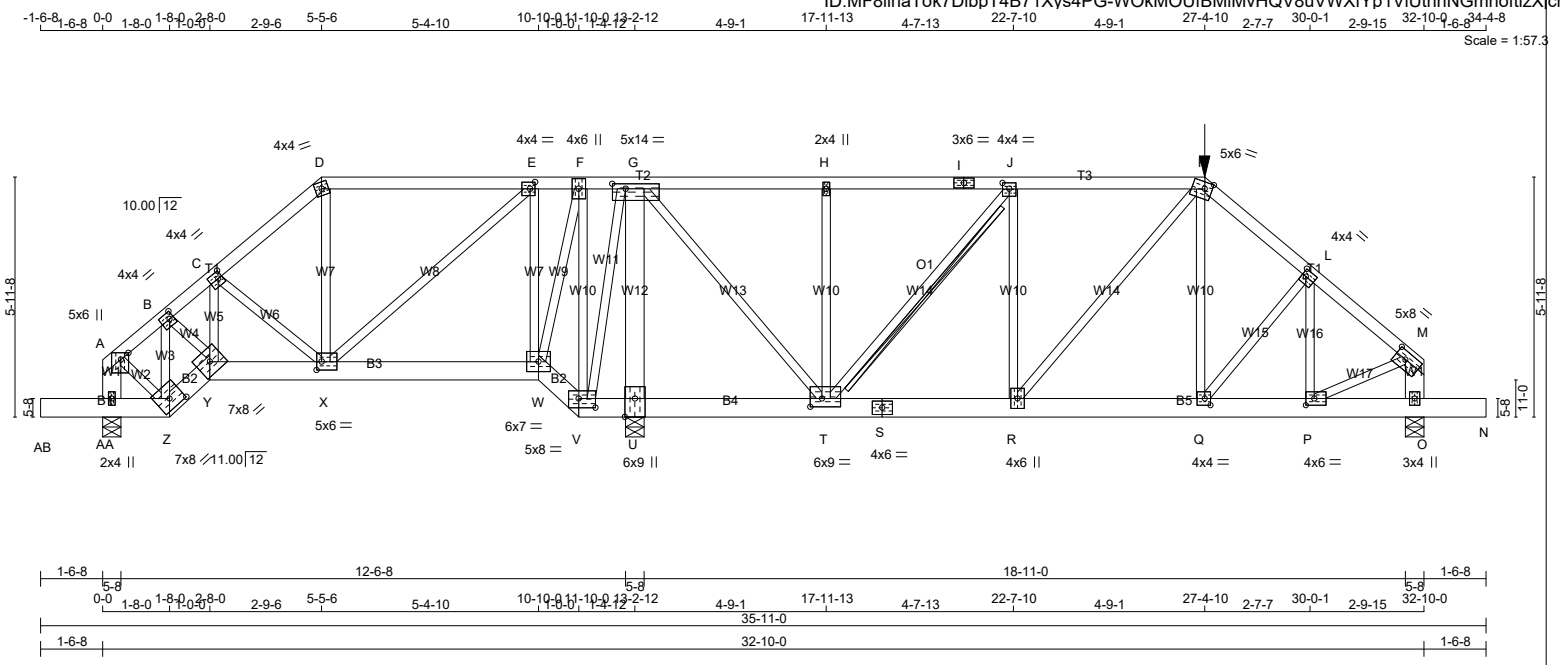

TOTAL WEIGHT = 3 X 191 = 574 lb

[M]

LUMBER

N. L. G. A. RULES

CHORDS	SIZE		LUMBER	DESCR.
A - D	2x4	DRY	No.2	SPF
D - I	2x4	DRY	No.2	SPF
I - K	2x4	DRY	No.2	SPF
K - M	2x4	DRY	No.2	SPF
AA- A	2x6	DRY	No.2	SPF
O - M	2x6	DRY	No.2	SPF
AB- Z	2x6	DRY	No.2	SPF
Z - Y	2x6	DRY	No.2	SPF
Y - W	2x6	DRY	No.2	SPF
W - V	2x6	DRY	No.2	SPF
V - S	2x6	DRY	No.2	SPF
S - N	2x6	DRY	No.2	SPF
ALL WEBS	2x3	DRY	No.2	SPF
EXCEPT				
U - G	2x6	DRY	No.2	SPF

DRY: SEASONED LUMBER.

DESIGN CONSISTS OF 3 TRUSSES BUILT SEPARATELY THEN FASTENED TOGETHER AS FOLLOWS:

CHORDS	#ROWS	SURFACE SPACING (IN)	LOAD(PLF)
TOP CHORDS : (0.122"X3") SPIRAL NAILS			
A- D	1	12	TOP
D- I	1	12	SIDE(25.2)
I- K	1	12	SIDE(70.9)
K- M	1	12	SIDE(91.5)
AA- A	2	12	TOP
O- M	2	12	TOP
BOTTOM CHORDS : (0.122"X3") SPIRAL NAILS			
AB- Z	2	6	SIDE(376.5)
Z- Y	2	9	SIDE(277.6)
Y- W	2	6	SIDE(376.6)
W- V	2	9	SIDE(277.6)
V- S	2	6	SIDE(376.6)
S- N	2	6	SIDE(376.6)
WEBS : (0.122"X3") SPIRAL NAILS			
Q- K	1	6	SIDE(119.3)
2x3	1	6	
2x6	2	6	

LATERAL BRACE(S) SHOWN SHALL BE 2X4 SPF#2

DIMENSIONS, SUPPORTS AND LOADINGS SPECIFIED BY FABRICATOR TO BE VERIFIED BY BUILDING DESIGNER

BEARINGS

JT	FACTORED GROSS REACTION VERT	HORZ	MAXIMUM FACTORED GROSS REACTION DOWN	HORZ	UPLIFT	INPUT BRG IN-SX	REQRD BRG IN-SX
U	14023	0	14023	0	0	5-8	5-8
AA	3487	0	3487	0	0	5-8	1-8
O	7098	0	7098	0	0	5-8	2-8

UNFACTORED REACTIONS

JT	1ST LCASE COMBINED	MAX./MIN. COMPONENT REACTIONS SNOW	LIVE	PERM.LIVE	WIND	DEAD	SOIL
U	9997	6107 / 0	0 / 0	0 / 0	0 / 0	3890 / 0	0 / 0
AA	2486	1517 / 0	0 / 0	0 / 0	0 / 0	969 / 0	0 / 0
O	5065	3066 / 0	0 / 0	0 / 0	0 / 0	1999 / 0	0 / 0

BEARING MATERIAL TO BE SPF NO.2 OR BETTER AT JOINT(S) U, AA, O
BEARING SIZE FACTOR = 1.15 AT JNT(S) U (BASED ON SUPPORT DEPTH = 1-8)

BRACING

TOP CHORD TO BE SHEATHED OR MAX. PURLIN SPACING = 4.52 FT.
MAX. UNBRACED BOTTOM CHORD LENGTH = 6.25 FT OR RIGID CEILING DIRECTLY APPLIED.

ALL PITCH BREAKS AND PERIMETER CORNER JOINTS MUST BE LATERALLY RESTRAINED.

2x6 DRY SPF No.2 T-BRACE AT J-T

FASTEN T AND I-BRACES TO NARROW EDGE OF WEB WITH ONE ROW PER PLY OF 3" COMMON WIRE NAILS @ 6" O.C. WITH 3" MINIMUM END DISTANCE. BRACE MUST COVER 90% OF WEB LENGTH.

END VERTICAL(S) MUST BE SHEATHED OR HAVE BRACES AS INDICATED IN THE MAX. UNBRACED LENGTH COLUMN OF THE TABLE BELOW

LOADING

TOTAL LOAD CASES: (6)

CHORDS

MEMB. FR-TO	MAX. FACTORED FORCE (LBS)	FACTORED VERT. LOAD LC1 (PLF) FROM	TO	MAX CSI (LC)	MAX. UNBRAC LENGTH
A- B	-2579 / 0	-78.0	-78.0	0.04 (5)	6.25
B- C	-3758 / 0	-78.0	-78.0	0.05 (5)	5.71
C- D	-2735 / 0	-78.0	-78.0	0.04 (5)	6.25
D- E	-2123 / 0	-78.0	-78.0	0.10 (5)	6.25
E- F	0 / 673	-78.0	-78.0	0.12 (1)	10.00
F- G	0 / 1289	-78.0	-78.0	0.27 (1)	10.00
G- H	-3483 / 0	-115.7	-115.7	0.23 (1)	5.65
H- I	-3483 / 0	-115.7	-115.7	0.14 (6)	5.76
I- J	-3483 / 0	-115.7	-115.7	0.14 (6)	5.76
J- K	-5989 / 0	-115.7	-115.7	0.18 (6)	4.64
K- L	-6701 / 0	-78.0	-78.0	0.09 (6)	4.52
L- M	-6616 / 0	-78.0	-78.0	0.10 (6)	4.54
AA- A	-2868 / 0	0.0	0.0	0.06 (5)	7.81
O- M	-6149 / 0	0.0	0.0	0.13 (6)	7.07
AB-AA	0 / 0	-96.5	-96.5	0.03 (1)	10.00
AA- Z	-2 / 0	-583.4	-583.4	0.04 (5)	10.00
Z- Y	0 / 2530	-583.4	-583.4	0.12 (5)	10.00
Y- X	0 / 2863	-583.4	-583.4	0.42 (5)	10.00
X- W	-622 / 0	-583.4	-583.4	0.32 (1)	6.25
W- V	-1813 / 0	-583.4	-583.4	0.02 (1)	6.25
V- U	-2045 / 0	-583.4	-583.4	0.50 (1)	6.25
U- T	-1998 / 0	-687.3	-687.3	0.50 (1)	6.25
T- S	0 / 5989	-687.3	-687.3	0.51 (6)	10.00
S- R	0 / 5989	-687.3	-687.3	0.51 (6)	10.00
R- Q	0 / 5175	-687.3	-687.3	0.48 (6)	10.00
Q- P	0 / 5081	-610.5	-610.5	0.39 (6)	10.00
P- O	0 / 0	-610.5	-610.5	0.13 (6)	10.00
O- N	0 / 0	-96.5	-96.5	0.03 (1)	10.00

WEBS

MEMB. FR-TO	MAX. FACTORED FORCE (LBS)	MAX CSI (LC)
Z- B	-2089 / 0	0.11 (5)
B- Y	0 / 1664	0.12 (5)
Y- C	0 / 1126	0.08 (5)
C- X	-1029 / 0	0.08 (5)
X- D	0 / 1474	0.11 (5)
X- E	0 / 3451	0.26 (1)
W- E	-2871 / 0	0.33 (1)
W- F	0 / 3349	0.25 (5)
V- F	-2675 / 0	0.46 (5)
V- G	0 / 2998	0.22 (5)
U- G	-10052 / 0	0.78 (1)
G- T	0 / 8330	0.62 (1)
T- H	-445 / 0	0.08 (6)
T- J	-3962 / 0	0.43 (1)
R- J	0 / 2558	0.19 (5)
R- K	0 / 1252	0.09 (6)
Q- K	0 / 2562	0.19 (1)
Q- L	-9 / 102	0.01 (5)
P- L	-346 / 0	0.02 (6)
A- Z	0 / 2264	0.17 (5)
P- M	0 / 5391	0.40 (6)

DESIGN CRITERIA

SPECIFIED LOADS:

TOP CH.	LL	=	21.0	PSF
	DL	=	6.0	PSF
BOT CH.	LL	=	0.0	PSF
	DL	=	7.4	PSF
TOTAL LOAD		=	34.4	PSF

SPACING = 24.0 IN. C/C

LOADING IN FLAT SECTION BASED ON A SLOPE OF 2.00/12 MINIMUM

GIRDER TYPE: CStdGirder
START DISTANCE = 0-0
START SPAN CARRIED = 25-5-1
END DISTANCE = 32-10-0
END SPAN CARRIED = 25-5-1
END WALL WIDTH = 0-0
APPLIED TO BACK SIDE OF BOTTOM CHORD.
- ADDT'L LOADS BASED ON 55 % OF GSL.

GIRDER TYPE: CPrimeHip
SIDE SETBACK = 5-5-6
END SETBACK = 7-10-8
END WALL WIDTH = 0-0
CORNER FRAMING TYPE: CONVENTIONAL
END JACK TYPE: PARTIAL
APPLIED TO FRONT SIDE
- ADDT'L LOADS BASED ON 55 % OF GSL.
LOADS APPLIED TO FIRST 19-10-0 OF SPAN MEASURED FROM THE RIGHT.

THIS TRUSS IS DESIGNED FOR RESIDENTIAL OR SMALL BUILDING REQUIREMENTS OF PART 9, NBCC 2015

THIS DESIGN COMPLIES WITH:
- PART 9 OF BCBC 2018 , ABC 2019
- PART 9 OF OBC 2012 (2019 AMENDMENT)
- CSA 086-14
- TPIC 2014

DESIGN ASSUMPTIONS
-OVERHANG NOT TO BE ALTERED OR CUT OFF.

(55 % OF 23.0 P.S.F. G.S.L. PLUS 8.4 P.S.F. RAIN LOAD) EQUALS 21.0 P.S.F. SPECIFIED ROOF LIVE LOAD

ALLOWABLE DEFL.(LL)= L/360 (0.65")
CALCULATED VERT. DEFL.(LL) = L/ 999 (0.06")
ALLOWABLE DEFL.(TL)= L/360 (0.65")
CALCULATED VERT. DEFL.(TL) = L/ 999 (0.12")

CANTILEVER DEFLECTION:
ALLOWABLE DEFL.(LL)= L/120 (0.19")
CALCULATED VERT. DEFL.(LL) = L/ 999 (0.01")
ALLOWABLE DEFL.(TL)= L/120 (0.19")
CALCULATED VERT. DEFL.(TL) = L/ 738 (0.03")

CSI: TC=0.27/1.00 (F-G:1) , BC=0.51/1.00 (R-T:6) , WB=0.78/1.00 (G-U:1) , SSI=0.40/1.00 (U-V:1)

DOL LUMBER=1.00 NAIL=1.00 LS BEND=1.10 COMP=1.10 SHEAR=1.10 TENS= 1.10

COMPANION LIVE LOAD FACTOR = 1.00

CONTINUED ON PAGE 2

STAGGER NAILS BY HALF THE SURFACE SPACING IN ADJACENT PLIES.

GIRDER NAILING ASSUMES NAILED HANGERS ARE FASTENED WITH MIN. 3-0 INCH NAILS.

PLATES (table is in inches)

JT	TYPE	PLATES	W	LEN	Y	X
A	TMVW+p	MT20	5.0	6.0	2.00	2.25
B, C, L						
B	TMWW-t	MT20	4.0	4.0	2.00	1.25
D	TTW-m	MT20	4.0	4.0		
E	TMWW-t	MT20	4.0	4.0	2.00	1.50
F	TMWW+t	MT20	4.0	6.0		
G	TMWWW-t	MT20	5.0	14.0	1.50	4.00
H	TMW+w	MT20	2.0	4.0		
I	TS-t	MT20	3.0	6.0		
J	TMWW-t	MT20	4.0	4.0	1.75	2.00
K	TTWW-m	MT20	5.0	6.0	2.00	2.25
M	TMVW-t	MT20	5.0	8.0	2.25	3.25
O	BMV1+p	MT20	3.0	4.0		
P	BMWW-t	MT20	4.0	6.0	2.00	2.50
Q	BMWW-t	MT20	4.0	4.0	2.00	1.75
R	BMWW+t	MT20	4.0	6.0		
S	BS-t	MT20	4.0	6.0		
T	BMWWW-t	MT20	6.0	9.0	2.50	3.50
U	BMW1+t	MT20	6.0	9.0	Edge	3.00
V	BBWW-l	MT20	5.0	8.0	2.75	5.00
W	BBWW-l	MT20	6.0	7.0		
X	BMWWW-t	MT20	5.0	6.0	2.50	1.50
Y	BBWW-h	MT20	7.0	8.0		
Z	BBWW-h	MT20	7.0	8.0	3.00	4.00
AA	BMV1+p	MT20	2.0	4.0		

Edge - INDICATES REFERENCE CORNER OF PLATE TOUCHES EDGE OF CHORD.

LATERAL BRACE(S) SHOWN SHALL BE 2X4 SPF#2

FACTORED CONCENTRATED LOADS (LBS)

JT	LOC.	LC1	MAX-	MAX+	FACE	DIR.	TYPE	HEEL	CONN.
K	27-4-10	-451	-451	---	FRONT	VERT	TOTAL	---	C1

PATTERN-LOADING CHECK APPLIED TO THIS TRUSS.

AUTOSOLVE HEELS OFF

TRUSS PLATE MANUFACTURER IS NOT RESPONSIBLE FOR QUALITY CONTROL IN THE TRUSS MANUFACTURING PLANT .

NAIL VALUES

PLATE	GRIP(DRY) (PSI)		SHEAR (PLI)		SECTION (PLI)	
	MAX	MIN	MAX	MIN	MAX	MIN
MT20	650	371	1747	788	1987	1873

PLATE PLACEMENT TOL. = 0.250 inches

PLATE ROTATION TOL. = 5.0 Deg.

JSI GRIP= 0.90 (G) (INPUT = 0.90)
JSI METAL= 0.71 (S) (INPUT = 1.00)

JOB NAME	TRUSS NAME	QUANTITY	PLY	JOB DESC.	DRWG NO.
318401	J1T		1	TRUSS DESC. JT 45147	E20035266

Alpa Roof Truss, Maple

Version 8.310 S Oct 29 2019 MiTek Industries, Inc. Tue Mar 24 13:27:10 2020 Page 1

ID:MF8iiriaTok7DlbpT4B71Xys4PG-uSZyex0Shmuq7wrE7jcPqZoqNtAQcNjAen 6ELzXjqF

Scale = 1:28.7

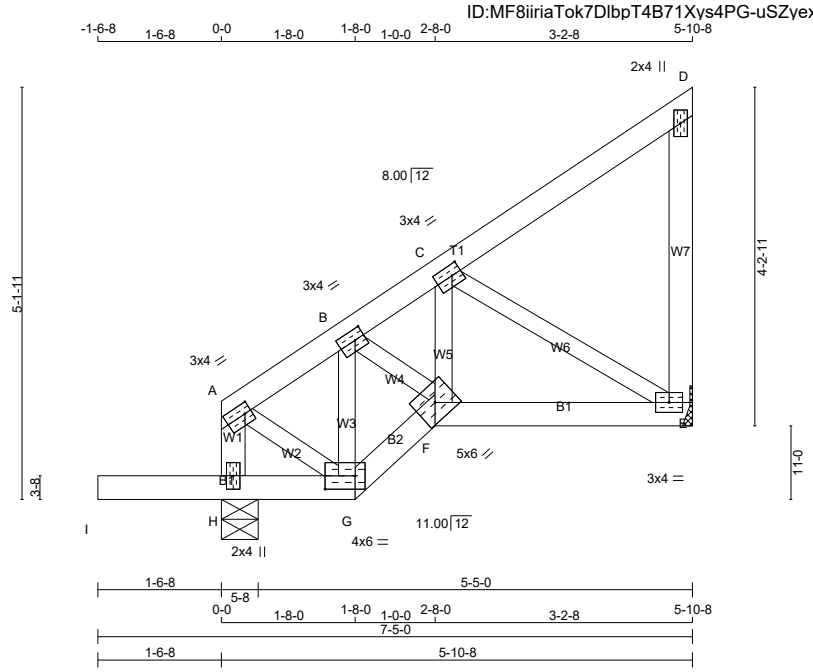

TOTAL WEIGHT = 3 X 30 = 89 lb

[M]

LUMBER

N. L. G. A. RULES

CHORDS	SIZE		LUMBER	DESCR.
H - A	2x4	DRY	No.2	SPF
A - D	2x4	DRY	No.2	SPF
E - D	2x4	DRY	No.2	SPF
I - G	2x4	DRY	No.2	SPF
G - F	2x4	DRY	No.2	SPF
F - E	2x4	DRY	No.2	SPF
ALL WEBS	2x3	DRY	No.2	SPF

DRY: SEASONED LUMBER.

PLATES (table is in inches)

JT	TYPE	PLATES	W	LEN	Y	X
A	TMVW-t	MT20	3.0	4.0	1.50	1.00
B	TMWW-t	MT20	3.0	4.0	1.50	1.50
C	TMWW-t	MT20	3.0	4.0	1.50	1.50
D	TMV+p	MT20	2.0	4.0		
E	BMVW1-t	MT20	3.0	4.0		
F	BBWW-h	MT20	5.0	6.0		
G	BBWW-l	MT20	4.0	6.0	2.00	4.50
H	BMV1+p	MT20	2.0	4.0		

LATERAL BRACE(S) SHOWN SHALL BE 2X4 SPF#2

DIMENSIONS, SUPPORTS AND LOADINGS SPECIFIED BY FABRICATOR TO BE VERIFIED BY BUILDING DESIGNER

BEARINGS

JT	FACTORED GROSS REACTION VERT	HORZ	MAXIMUM FACTORED GROSS REACTION DOWN	HORZ	UPLIFT	INPUT BRG IN-SX	REQRD BRG IN-SX
H	452	0	452	0	0	5-8	1-8
E	264	0	264	0	0	MECHANICAL	

A SUITABLE HANGER/MECHANICAL CONNECTION IS REQUIRED AT JOINT E. MINIMUM BEARING LENGTH AT JOINT E = 1-8.

UNFACTORED REACTIONS

JT	1ST LCASE COMBINED	MAX./MIN. COMPONENT REACTIONS SNOW	LIVE	PERM.LIVE	WIND	DEAD	SOIL
H	322	197 / 0	0 / 0	0 / 0	0 / 0	125 / 0	0 / 0
E	188	115 / 0	0 / 0	0 / 0	0 / 0	73 / 0	0 / 0

BEARING MATERIAL TO BE SPF NO.2 OR BETTER AT JOINT(S) H

BRACING

TOP CHORD TO BE SHEATHED OR MAX. PURLIN SPACING = 6.25 FT.
MAX. UNBRACED BOTTOM CHORD LENGTH = 10.00 FT OR RIGID CEILING DIRECTLY APPLIED.

ALL PITCH BREAKS AND PERIMETER CORNER JOINTS MUST BE LATERALLY RESTRAINED.

LOADING

TOTAL LOAD CASES: (4)

CHORDS

MEMB. FR-TO	MAX. FACTORED FORCE (LBS)	FACTORED VERT. LOAD LC1 (PLF) FROM	TO	MAX CSI (LC)	MAX. UNBRAC LENGTH
H- A	-219 / 0	0.0	0.0	0.02 (1)	7.81
A- B	-159 / 0	-78.0	-78.0	0.03 (1)	6.25
B- C	-250 / 0	-78.0	-78.0	0.09 (1)	6.25
C- D	-12 / 0	-78.0	-78.0	0.09 (1)	6.25
E- D	-100 / 0	0.0	0.0	0.03 (1)	7.81
I- H	0 / 0	-96.5	-96.5	0.16 (1)	10.00
H- G	-1 / 0	-18.5	-18.5	0.16 (1)	10.00
G- F	0 / 162	-18.5	-18.5	0.03 (1)	10.00
F- E	0 / 231	-18.5	-18.5	0.08 (4)	10.00

WEBS

MEMB. FR-TO	MAX. FACTORED FORCE (LBS)	MAX CSI (LC)
A- G	0 / 149	0.03 (1)
G- B	-223 / 0	0.03 (1)
B- F	0 / 154	0.03 (1)
F- C	0 / 52	0.02 (4)
C- E	-268 / 0	0.06 (1)

DESIGN CRITERIA

SPECIFIED LOADS:

TOP	CH.	LL =	21.0	PSF
		DL =	6.0	PSF
BOT	CH.	LL =	0.0	PSF
		DL =	7.4	PSF
TOTAL	LOAD	=	34.4	PSF

SPACING = 24.0 IN. C/C

THIS TRUSS IS DESIGNED FOR RESIDENTIAL OR SMALL BUILDING REQUIREMENTS OF PART 9, NBCC 2015

THIS DESIGN COMPLIES WITH:
- PART 9 OF BCBC 2018 , ABC 2019
- PART 9 OF OBC 2012 (2019 AMENDMENT)
- CSA 086-14
- TPIC 2014

DESIGN ASSUMPTIONS
-OVERHANG NOT TO BE ALTERED OR CUT OFF.

(55 % OF 23.0 P.S.F. G.S.L. PLUS 8.4 P.S.F. RAIN LOAD) EQUALS 21.0 P.S.F. SPECIFIED ROOF LIVE LOAD

ALLOWABLE DEFL.(LL)= L/360 (0.20")
CALCULATED VERT. DEFL.(LL) = L/ 999 (0.00")
ALLOWABLE DEFL.(TL)= L/360 (0.20")
CALCULATED VERT. DEFL.(TL) = L/ 999 (0.01")

CANTILEVER DEFLECTION:
ALLOWABLE DEFL.(LL)= L/120 (0.19")
CALCULATED VERT. DEFL.(LL) = L/ 999 (0.02")
ALLOWABLE DEFL.(TL)= L/120 (0.19")
CALCULATED VERT. DEFL.(TL) = L/ 626 (0.03")

CSI: TC=0.09/1.00 (B-C:1) , BC=0.16/1.00 (G-H:1) , WB=0.06/1.00 (C-E:1) , SSI=0.12/1.00 (H-I:1)

DOL LUMBER=1.00 NAIL=1.00 LS BEND=1.10 COMP=1.10 SHEAR=1.10 TENS= 1.10

COMPANION LIVE LOAD FACTOR = 1.00

TRUSS PLATE MANUFACTURER IS NOT RESPONSIBLE FOR QUALITY CONTROL IN THE TRUSS MANUFACTURING PLANT .

NAIL VALUES

PLATE	GRIP(DRY) (PSI) MAX	MIN	SHEAR (PLI) MAX	MIN	SECTION (PLI) MAX	MIN
MT20	650	371	1747	788	1987	1873

PLATE PLACEMENT TOL. = 0.250 inches

PLATE ROTATION TOL. = 5.0 Deg.

JSI GRIP= 0.46 (A) (INPUT = 0.90)
JSI METAL= 0.08 (E) (INPUT = 1.00)

JOB NAME	TRUSS NAME	QUANTITY	PLY	JOB DESC.	DRWG NO.
318401	J1TA		1	TRUSS DESC. JT 45147	E20035267

Alpa Roof Truss, Maple

Version 8.310 S Oct 29 2019 MiTek Industries, Inc. Tue Mar 24 13:27:11 2020 Page 1

ID:MF8iiriaTok7DlbpT4B71Xys4PG-Ne7KrH14S30hl4QRhQ7eNnK?IGWPLpXKtRjgmnzXjqE

Scale = 1:25.2

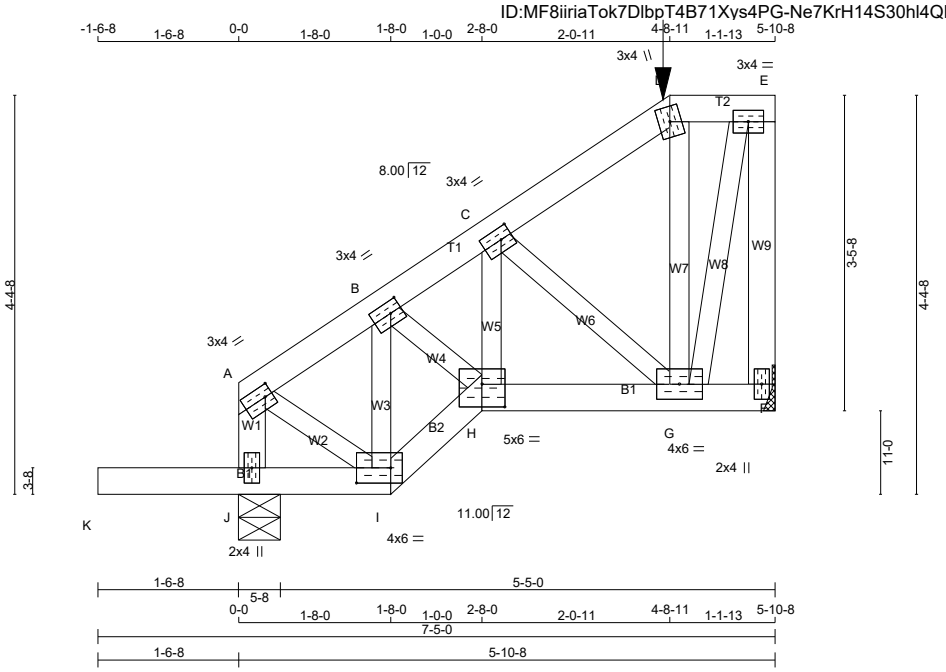

TOTAL WEIGHT = 2 X 33 = 66 lb

LUMBER

N. L. G. A. RULES

CHORDS	SIZE		LUMBER	DESCR.
A - D	2x4	DRY	No.2	SPF
D - E	2x4	DRY	No.2	SPF
F - E	2x4	DRY	No.2	SPF
J - A	2x4	DRY	No.2	SPF
K - I	2x4	DRY	No.2	SPF
I - H	2x4	DRY	No.2	SPF
H - F	2x4	DRY	No.2	SPF
ALL WEBS EXCEPT	2x3	DRY	No.2	SPF

DRY: SEASONED LUMBER.

PLATES (table is in inches)

JT	TYPE	PLATES	W	LEN	Y	X
A	TMVW-t	MT20	3.0	4.0	1.50	1.00
B	TMWW-t	MT20	3.0	4.0	1.50	1.50
C	TMWW-t	MT20	3.0	4.0	1.50	1.50
D	TTW+m	MT20	3.0	4.0		
E	TMVW-t	MT20	3.0	4.0		
F	BMV1+p	MT20	2.0	4.0		
G	BMWWW-t	MT20	4.0	6.0		
H	BBWW-l	MT20	5.0	6.0	3.00	3.00
I	BBWW-l	MT20	4.0	6.0	2.00	4.50
J	BMV1+p	MT20	2.0	4.0		

LATERAL BRACE(S) SHOWN SHALL BE 2X4 SPF#2

DIMENSIONS, SUPPORTS AND LOADINGS SPECIFIED BY FABRICATOR TO BE VERIFIED BY BUILDING DESIGNER

BEARINGS

JT	FACTORED GROSS REACTION VERT	HORZ	MAXIMUM FACTORED GROSS REACTION DOWN	HORZ	UPLIFT	INPUT BRG IN-SX	REQRD BRG IN-SX
F	417	0	417	0	0	MECHANICAL	
J	501	0	501	0	0	5-8	1-8

A SUITABLE HANGER/MECHANICAL CONNECTION IS REQUIRED AT JOINT F. MINIMUM BEARING LENGTH AT JOINT F = 1-8.

UNFACTORED REACTIONS

JT	1ST LCASE COMBINED	MAX./MIN. COMPONENT REACTIONS SNOW	LIVE	PERM.LIVE	WIND	DEAD	SOIL
F	296	186 / 0	0 / 0	0 / 0	0 / 0	110 / 0	0 / 0
J	358	212 / 0	0 / 0	0 / 0	0 / 0	147 / 0	0 / 0

BEARING MATERIAL TO BE SPF NO.2 OR BETTER AT JOINT(S) J

BRACING

TOP CHORD TO BE SHEATHED OR MAX. PURLIN SPACING = 6.25 FT.
MAX. UNBRACED BOTTOM CHORD LENGTH = 10.00 FT OR RIGID CEILING DIRECTLY APPLIED.

ALL PITCH BREAKS AND PERIMETER CORNER JOINTS MUST BE LATERALLY RESTRAINED.

LOADING

TOTAL LOAD CASES: (4)

CHORDS

MEMB. FR-TO	MAX. FACTORED FORCE (LBS)	FACTORED VERT. LOAD LC1 (PLF) FROM	TO	MAX CSI (LC)	MAX. UNBRAC LENGTH
A- B	-204 / 0	-78.0	-78.0	0.03 (1)	6.25
B- C	-319 / 0	-78.0	-78.0	0.04 (1)	6.25
C- D	-148 / 0	-78.0	-78.0	0.04 (1)	6.25
D- E	-112 / 0	-108.0	-108.0	0.03 (1)	6.25
F- E	-398 / 0	0.0	0.0	0.08 (1)	7.81
J- A	-262 / 0	0.0	0.0	0.03 (1)	7.81
K- J	0 / 0	-96.5	-96.5	0.17 (1)	10.00
J- I	-1 / 0	-25.6	-25.6	0.17 (1)	10.00
I- H	0 / 213	-25.6	-25.6	0.04 (1)	10.00
H- G	0 / 267	-25.6	-25.6	0.07 (1)	10.00
G- F	0 / 0	-25.6	-25.6	0.01 (4)	10.00

WEBS

MEMB. FR-TO	MAX. FACTORED FORCE (LBS)	MAX CSI (LC)
I- B	-269 / 0	0.04 (1)
B- H	0 / 155	0.04 (1)
H- C	0 / 86	0.02 (4)
C- G	-200 / 0	0.04 (1)
G- D	-174 / 0	0.04 (1)
G- E	0 / 355	0.09 (1)
A- I	0 / 194	0.05 (1)

FACTORED CONCENTRATED LOADS (LBS)

JT	LOC.	LC1	MAX-	MAX+	FACE	DIR.	TYPE	HEEL	CONN.
D	4-8-11	-125	-125	---	FRONT	VERT	TOTAL	---	C1

[M]

DESIGN CRITERIA

SPECIFIED LOADS:

TOP CH.	LL	=	21.0	PSF
	DL	=	6.0	PSF
BOT CH.	LL	=	0.0	PSF
	DL	=	7.4	PSF
TOTAL LOAD		=	34.4	PSF

SPACING = 24.0 IN. C/C

LOADING IN FLAT SECTION BASED ON A SLOPE OF 2.00/12 MINIMUM

GIRDER TYPE: CPrimeHip
LEFT SETBACK = 4-8-11
RIGHT SETBACK = 0-0
END SETBACK = 3-6-8
END WALL WIDTH = 0-0
CORNER FRAMING TYPE: CONVENTIONAL
END JACK TYPE: CONVENTIONAL
APPLIED TO FRONT SIDE
- ADDT'L LOADS BASED ON 55 % OF GSL.

THIS TRUSS IS DESIGNED FOR RESIDENTIAL OR SMALL BUILDING REQUIREMENTS OF PART 9, NBCC 2015

THIS DESIGN COMPLIES WITH:
- PART 9 OF BCBC 2018 , ABC 2019
- PART 9 OF OBC 2012 (2019 AMENDMENT)
- CSA 086-14
- TPIC 2014

DESIGN ASSUMPTIONS
-OVERHANG NOT TO BE ALTERED OR CUT OFF.

(55 % OF 23.0 P.S.F. G.S.L. PLUS 8.4 P.S.F. RAIN LOAD) EQUALS 21.0 P.S.F. SPECIFIED ROOF LIVE LOAD

ALLOWABLE DEFL.(LL)= L/360 (0.20")
CALCULATED VERT. DEFL.(LL) = L/ 999 (0.00")
ALLOWABLE DEFL.(TL)= L/360 (0.20")
CALCULATED VERT. DEFL.(TL) = L/ 999 (0.01")

CANTILEVER DEFLECTION:
ALLOWABLE DEFL.(LL)= L/120 (0.19")
CALCULATED VERT. DEFL.(LL) = L/ 999 (0.02")
ALLOWABLE DEFL.(TL)= L/120 (0.19")
CALCULATED VERT. DEFL.(TL) = L/ 656 (0.03")

CSI: TC=0.08/1.00 (E-F:1) , BC=0.17/1.00 (I-J:1) , WB=0.09/1.00 (E-G:1) , SSI=0.13/1.00 (J-K:1)

DOL LUMBER=1.00 NAIL=1.00 LS BEND=1.00 COMP=1.00 SHEAR=1.00 TENS= 1.00

COMPANION LIVE LOAD FACTOR = 1.00

TRUSS PLATE MANUFACTURER IS NOT RESPONSIBLE FOR QUALITY CONTROL IN THE TRUSS MANUFACTURING PLANT .

NAIL VALUES

PLATE	GRIP(DRY) (PSI) MAX	MIN	SHEAR (PLI) MAX	MIN	SECTION (PLI) MAX	MIN
MT20	650	371	1747	788	1987	1873

CONTINUED ON PAGE 2

JOB NAME	TRUSS NAME	QUANTITY	PLY	JOB DESC.	DRWG NO.
318404	H31		1	TRUSS DESC. JT 45147	E20035334

Alpa Roof Truss, Maple

Version 8.310 S Oct 29 2019 MiTek Industries, Inc. Tue Mar 24 15:05:01 2020 Page 1

ID:MF8iiriaTok7DlbpT4B71Xys4PG-VxpRqR373dao AAbZERBHeS6kVxzifYLghfloYzXiEW

Scale = 1:50.0

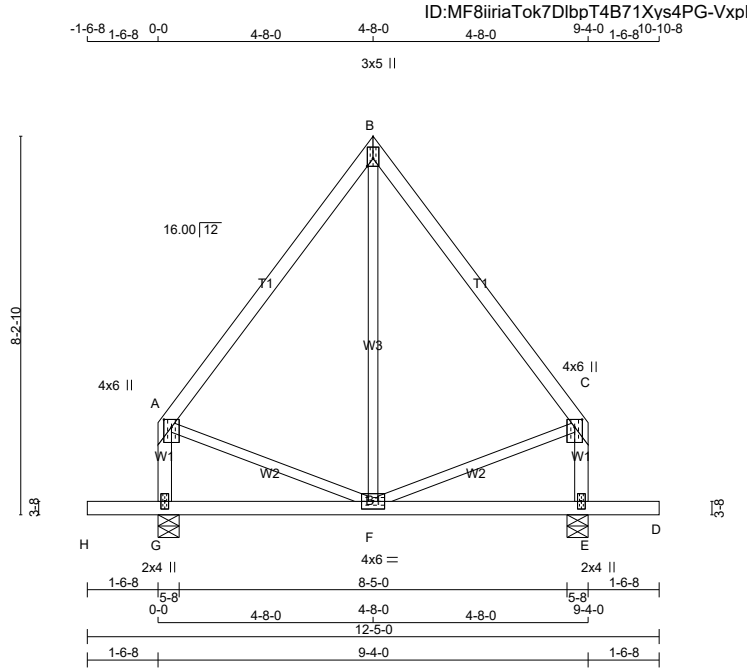

TOTAL WEIGHT = 3 X 50 = 150 lb

LUMBER

N. L. G. A. RULES

CHORDS	SIZE		LUMBER	DESCR.
A - B	2x4	DRY	No.2	SPF
B - C	2x4	DRY	No.2	SPF
G - A	2x4	DRY	No.2	SPF
E - C	2x4	DRY	No.2	SPF
H - D	2x4	DRY	No.2	SPF
ALL WEBS EXCEPT	2x3	DRY	No.2	SPF

DRY: SEASONED LUMBER.

PLATES (table is in inches)

JT	TYPE	PLATES	W	LEN	Y	X
A	TMVW+p	MT20	4.0	6.0	2.00	2.00
B	TTW+p	MT20	3.0	5.0	2.00	Edge
C	TMVW+p	MT20	4.0	6.0	2.00	2.00
E	BMV1+p	MT20	2.0	4.0		
F	BMWWW-t	MT20	4.0	6.0		
G	BMV1+p	MT20	2.0	4.0		

Edge - INDICATES REFERENCE CORNER OF PLATE TOUCHES EDGE OF CHORD.

LATERAL BRACE(S) SHOWN SHALL BE 2X4 SPF#2

DIMENSIONS, SUPPORTS AND LOADINGS SPECIFIED BY FABRICATOR TO BE VERIFIED BY BUILDING DESIGNER

BEARINGS

JT	FACTORED GROSS REACTION VERT	HORZ	MAXIMUM FACTORED GROSS REACTION DOWN	HORZ	UPLIFT	INPUT BRG IN-SX	REQRD BRG IN-SX
G	599	0	599	0	0	5-8	1-8
E	599	0	599	0	0	5-8	1-8

UNFACTORED REACTIONS

JT	1ST LCASE COMBINED	MAX./MIN. COMPONENT REACTIONS SNOW	LIVE	PERM.LIVE	WIND	DEAD	SOIL
G	427	261 / 0	0 / 0	0 / 0	0 / 0	166 / 0	0 / 0
E	427	261 / 0	0 / 0	0 / 0	0 / 0	166 / 0	0 / 0

BEARING MATERIAL TO BE SPF NO.2 OR BETTER AT JOINT(S) G, E

BRACING

TOP CHORD TO BE SHEATHED OR MAX. PURLIN SPACING = 6.25 FT.
MAX. UNBRACED BOTTOM CHORD LENGTH = 10.00 FT OR RIGID CEILING DIRECTLY APPLIED.

ALL PITCH BREAKS AND PERIMETER CORNER JOINTS MUST BE LATERALLY RESTRAINED.

LOADING

TOTAL LOAD CASES: (4)

CHORDS MEMB. FR-TO	MAX. FACTORED FORCE (LBS)	FACTORED VERT. LOAD (PLF) FROM	TO	LC1 MAX CSI (LC)	MAX. UNBRAC LENGTH	WEBS MEMB. FR-TO	MAX. FACTORED FORCE (LBS)	MAX CSI (LC)
A- B	-234 / 0	-78.0	-78.0	0.22 (1)	6.25	F- B	0 / 79	0.03 (4)
B- C	-234 / 0	-78.0	-78.0	0.22 (1)	6.25	A- F	0 / 148	0.03 (1)
G- A	-417 / 0	0.0	0.0	0.05 (1)	7.81	F- C	0 / 148	0.03 (1)
E- C	-417 / 0	0.0	0.0	0.05 (1)	7.81			
H- G	0 / 0	-96.5	-96.5	0.16 (1)	10.00			
G- F	0 / 0	-18.5	-18.5	0.11 (4)	10.00			
F- E	0 / 0	-18.5	-18.5	0.11 (4)	10.00			
E- D	0 / 0	-96.5	-96.5	0.16 (1)	10.00			

[M][F]

DESIGN CRITERIA

SPECIFIED LOADS:

TOP CH.	LL	=	21.0	PSF
	DL	=	6.0	PSF
BOT CH.	LL	=	0.0	PSF
	DL	=	7.4	PSF
TOTAL LOAD		=	34.4	PSF

SPACING = 24.0 IN. C/C

THIS TRUSS IS DESIGNED FOR RESIDENTIAL OR SMALL BUILDING REQUIREMENTS OF PART 9, NBCC 2015

THIS DESIGN COMPLIES WITH:
- PART 9 OF BCBC 2018 , ABC 2019
- PART 9 OF OBC 2012 (2019 AMENDMENT)
- CSA 086-14
- TPIC 2014

(55 % OF 23.0 P.S.F. G.S.L. PLUS 8.4 P.S.F. RAIN LOAD) EQUALS 21.0 P.S.F. SPECIFIED ROOF LIVE LOAD

ALLOWABLE DEFL.(LL)= L/360 (0.31")
CALCULATED VERT. DEFL.(LL) = L/ 999 (0.00")
ALLOWABLE DEFL.(TL)= L/360 (0.31")
CALCULATED VERT. DEFL.(TL) = L/ 999 (0.01")

CANTILEVER DEFLECTION:
ALLOWABLE DEFL.(LL)= L/120 (0.19")
CALCULATED VERT. DEFL.(LL) = L/ 999 (0.01")
ALLOWABLE DEFL.(TL)= L/120 (0.19")
CALCULATED VERT. DEFL.(TL) = L/ 999 (0.01")

CSI: TC=0.22/1.00 (B-C:1) , BC=0.16/1.00 (D-E:1) , WB=0.03/1.00 (C-F:1) , SSI=0.12/1.00 (G-H:1)

DOL LUMBER=1.00 NAIL=1.00 LS BEND=1.10 COMP=1.10 SHEAR=1.10 TENS= 1.10

COMPANION LIVE LOAD FACTOR = 1.00

TRUSS PLATE MANUFACTURER IS NOT RESPONSIBLE FOR QUALITY CONTROL IN THE TRUSS MANUFACTURING PLANT .

NAIL VALUES

PLATE	GRIP(DRY) (PSI) MAX	MIN	SHEAR (PLI) MAX	MIN	SECTION (PLI) MAX	MIN
MT20	650	371	1747	788	1987	1873

PLATE PLACEMENT TOL. = 0.250 inches

PLATE ROTATION TOL. = 5.0 Deg.

JSI GRIP= 0.23 (A) (INPUT = 0.90)
JSI METAL= 0.12 (C) (INPUT = 1.00)

JOB NAME	TRUSS NAME	QUANTITY	PLY	JOB DESC.	DRWG NO.
318404	H31G		1	TRUSS DESC. JT 45147	E20035335

Alpa Roof Truss, Maple

Version 8.310 S Oct 29 2019 MiTek Industries, Inc. Tue Mar 24 15:05:02 2020 Page 1

ID:MF8iiriaTok7DlbpT4B71Xys4PG-z7Np2n4lqxifbJlo6xyQps KDvGCR2vUvLPrK zXiEV

Scale = 1:49.0

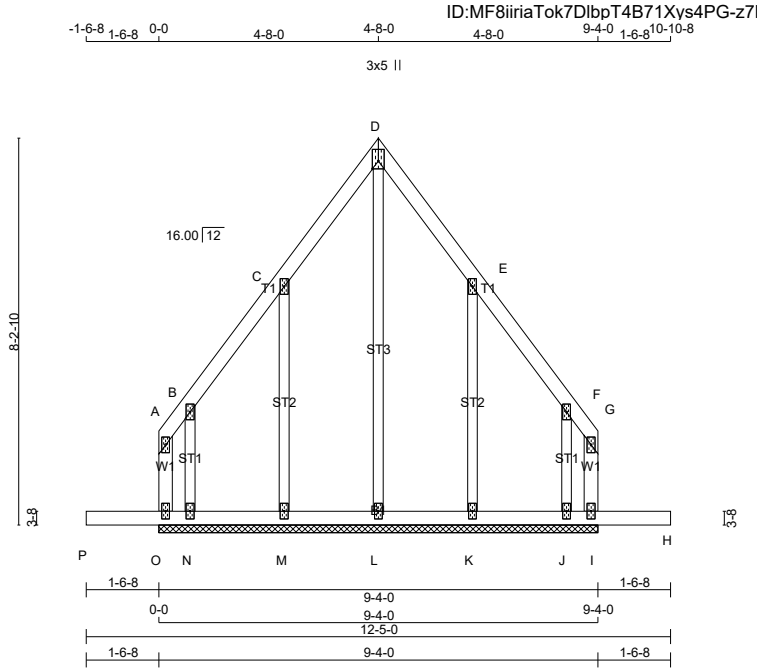

TOTAL WEIGHT = 54 lb

[M]

LUMBER

N. L. G. A. RULES

CHORDS	SIZE		LUMBER	DESCR.
O - A	2x4	DRY	No.2	SPF
A - D	2x4	DRY	No.2	SPF
D - G	2x4	DRY	No.2	SPF
I - G	2x4	DRY	No.2	SPF
P - H	2x4	DRY	No.2	SPF
ALL WEBS	2x3	DRY	No.2	SPF
ALL GABLE WEBS	2x3	DRY	No.2	SPF

DRY: SEASONED LUMBER.

GABLE STUDS SPACED AT 2-0-0 OC.

PLATES (table is in inches)

JT	TYPE	PLATES	W	LEN	Y	X
A	TMV+p	MT20	2.0	4.0		
B, C, E, F						
B	TMW+w	MT20	2.0	4.0		
D	TTW+p	MT20	3.0	5.0	2.00	Edge
G	TMV+p	MT20	2.0	4.0		
I	BMV1+p	MT20	2.0	4.0		
J, K, L, M, N						
J	BMW1+w	MT20	2.0	4.0		
O	BMV1+p	MT20	2.0	4.0		

Edge - INDICATES REFERENCE CORNER OF PLATE TOUCHES EDGE OF CHORD.

LATERAL BRACE(S) SHOWN SHALL BE 2X4 SPF#2

DIMENSIONS, SUPPORTS AND LOADINGS SPECIFIED BY FABRICATOR TO BE VERIFIED BY BUILDING DESIGNER

BEARINGS

THIS TRUSS DESIGNED FOR CONTINUOUS BEARINGS.

THIS TRUSS REQUIRES RIGID SHEATHING ON EXPOSED FACE.

PROVIDE ANCHORAGE AT BEARING JOINT N FOR 150 LBS FACTORED UPLIFT
PROVIDE ANCHORAGE AT BEARING JOINT J FOR 150 LBS FACTORED UPLIFT
BEARING MATERIAL TO BE SPF NO.2 OR BETTER AT JOINT(S)

BRACING

TOP CHORD TO BE SHEATHED OR MAX. PURLIN SPACING = 10.00 FT.
MAX. UNBRACED BOTTOM CHORD LENGTH = 10.00 FT OR RIGID CEILING DIRECTLY APPLIED.

ALL PITCH BREAKS AND PERIMETER CORNER JOINTS MUST BE LATERALLY RESTRAINED.

LOADING

TOTAL LOAD CASES: (4)

CHORDS

MEMB. FR-TO	MAX. FORCE (LBS)	FACTORED VERT. LOAD (PLF) FROM	TO	LC1	MAX CSI (LC)	MAX. UNBRAC LENGTH
O- A	-20 / 0	0.0	0.0	0.02 (1)	7.81	
A- B	0 / 5	-78.0	-78.0	0.02 (1)	10.00	
B- C	0 / 10	-78.0	-78.0	0.04 (1)	10.00	
C- D	0 / 9	-78.0	-78.0	0.04 (1)	10.00	
D- E	0 / 9	-78.0	-78.0	0.04 (1)	10.00	
E- F	0 / 10	-78.0	-78.0	0.04 (1)	10.00	
F- G	0 / 5	-78.0	-78.0	0.02 (1)	10.00	
I- G	-20 / 0	0.0	0.0	0.02 (1)	7.81	
P- O	0 / 0	-96.5	-96.5	0.16 (1)	10.00	
O- N	-3 / 2	-18.5	-18.5	0.14 (1)	10.00	
N- M	-4 / 0	-18.5	-18.5	0.02 (4)	10.00	
M- L	-6 / 0	-18.5	-18.5	0.02 (4)	10.00	
L- K	-6 / 0	-18.5	-18.5	0.02 (4)	10.00	
K- J	-4 / 0	-18.5	-18.5	0.02 (4)	10.00	
J- I	-3 / 2	-18.5	-18.5	0.14 (1)	10.00	
I- H	0 / 0	-96.5	-96.5	0.16 (1)	10.00	

WEBS

MEMB. FR-TO	MAX. FORCE (LBS)	MAX CSI (LC)
L- D	-178 / 0	0.22 (1)
M- C	-165 / 0	0.07 (1)
N- B	-90 / 0	0.02 (1)
K- E	-165 / 0	0.07 (1)
J- F	-90 / 0	0.02 (1)

DESIGN CRITERIA

SPECIFIED LOADS:

TOP CH.	LL	=	21.0	PSF
	DL	=	6.0	PSF
BOT CH.	LL	=	0.0	PSF
	DL	=	7.4	PSF
TOTAL LOAD		=	34.4	PSF

SPACING = 24.0 IN. C/C

THIS TRUSS IS DESIGNED FOR RESIDENTIAL OR SMALL BUILDING REQUIREMENTS OF PART 9, NBCC 2015

THIS DESIGN COMPLIES WITH:
- PART 9 OF BCBC 2018 , ABC 2019
- PART 9 OF OBC 2012 (2019 AMENDMENT)
- CSA 086-14
- TPIC 2014

DESIGN ASSUMPTIONS
-OVERHANG NOT TO BE ALTERED OR CUT OFF.

(55 % OF 23.0 P.S.F. G.S.L. PLUS 8.4 P.S.F. RAIN LOAD) EQUALS 21.0 P.S.F. SPECIFIED ROOF LIVE LOAD

CSI: TC=0.04/1.00 (B-C:1) , BC=0.16/1.00 (H-I:1) , WB=0.22/1.00 (D-L:1) , SSI=0.14/1.00 (I-J:1)

DOL LUMBER=1.00 NAIL=1.00 LS BEND=1.10 COMP=1.10 SHEAR=1.10 TENS= 1.10

COMPANION LIVE LOAD FACTOR = 1.00

TRUSS PLATE MANUFACTURER IS NOT RESPONSIBLE FOR QUALITY CONTROL IN THE TRUSS MANUFACTURING PLANT .

NAIL VALUES

PLATE	GRIP(DRY) (PSI) MAX	MIN	SHEAR (PLI) MAX	MIN	SECTION (PLI) MAX	MIN
MT20	650	371	1747	788	1987	1873

PLATE PLACEMENT TOL. = 0.250 inches

PLATE ROTATION TOL. = 5.0 Deg.

JSI GRIP= 0.17 (D) (INPUT = 0.90)
JSI METAL= 0.08 (E) (INPUT = 1.00)

JOB NAME	TRUSS NAME	QUANTITY	PLY	JOB DESC.	DRWG NO.
318404	J01		1	TRUSS DESC. JT 45147	E20035336

Alpa Roof Truss, Maple

Version 8.310 S Oct 29 2019 MiTek Industries, Inc. Tue Mar 24 15:05:04 2020 Page 1

ID:MF8iiriaTok7DlbpT4B71Xys4PG-vWVZST6?MYyNrduAEM uuH4YFjyYv?pnMfuyPtzXiET

Scale = 1:28.5

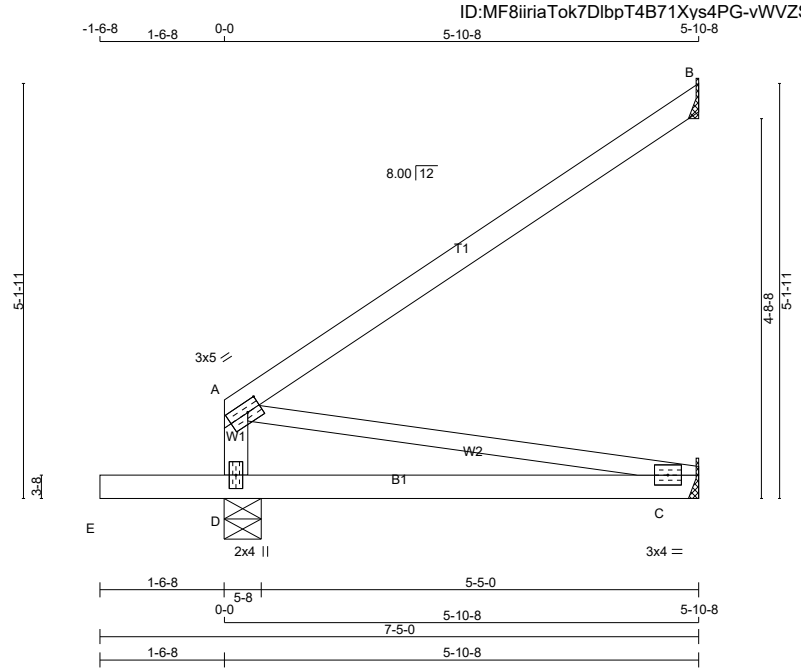

TOTAL WEIGHT = 7 X 22 = 155 lb

LUMBER

N. L. G. A. RULES

CHORDS	SIZE		LUMBER	DESCR.
D - A	2x4	DRY	No.2	SPF
A - B	2x4	DRY	No.2	SPF
E - C	2x4	DRY	No.2	SPF
ALL WEBS	2x3	DRY	No.2	SPF

DRY: SEASONED LUMBER.

PLATES (table is in inches)

JT	TYPE	PLATES	W	LEN	Y	X
A	TMVW-t	MT20	3.0	5.0	1.50	2.00
C	BMW1-t	MT20	3.0	4.0		
D	BMV1+p	MT20	2.0	4.0		

LATERAL BRACE(S) SHOWN SHALL BE 2X4 SPF#2

DIMENSIONS, SUPPORTS AND LOADINGS SPECIFIED BY FABRICATOR TO BE VERIFIED BY BUILDING DESIGNER

BEARINGS

	FACTORED GROSS REACTION		MAXIMUM FACTORED GROSS REACTION			INPUT BRG	REQRD BRG
JT	VERT	HORZ	DOWN	HORZ	UPLIFT	IN-SX	IN-SX
D	429	0	429	0	0	5-8	1-8
B	229	0	229	0	0	MECHANICAL	
C	51	0	57	0	0	MECHANICAL	

A SUITABLE HANGER/MECHANICAL CONNECTION IS REQUIRED AT JOINT B, C. MINIMUM BEARING LENGTH AT JOINT B = 1-8, JOINT C = 1-8.

BEVELED PLATE OR SHIM REQUIRED TO PROVIDE FULL BEARING SURFACE WITH TRUSS CHORD AT JT(S): B

UNFACTORED REACTIONS

	1ST LCASE	MAX./MIN. COMPONENT REACTIONS					
JT	COMBINED	SNOW	LIVE	PERM.LIVE	WIND	DEAD	SOIL
D	305	188 / 0	0 / 0	0 / 0	0 / 0	117 / 0	0 / 0
B	159	123 / 0	0 / 0	0 / 0	0 / 0	35 / 0	0 / 0
C	41	0 / 0	0 / 0	0 / 0	0 / 0	41 / 0	0 / 0

BEARING MATERIAL TO BE SPF NO.2 OR BETTER AT JOINT(S) D

BRACING

TOP CHORD TO BE SHEATHED OR MAX. PURLIN SPACING = 10.00 FT.
MAX. UNBRACED BOTTOM CHORD LENGTH = 10.00 FT OR RIGID CEILING DIRECTLY APPLIED.

ALL PITCH BREAKS AND PERIMETER CORNER JOINTS MUST BE LATERALLY RESTRAINED.

LOADING

TOTAL LOAD CASES: (4)

CHORDS MEMB. FR-TO	MAX. FACTORED FORCE (LBS)	FACTORED VERT. LOAD LC1 (PLF) FROM	TO	MAX CSI (LC)	MAX. UNBRAC LENGTH	WEBS MEMB. FR-TO	MAX. FACTORED FORCE (LBS)	MAX CSI (LC)
D- A	-229 / 0	0.0	0.0	0.02 (1)	7.81	A- C	0 / 0	0.00 (1)
A- B	0 / 0	-78.0	-78.0	0.46 (1)	10.00			
E- D	0 / 0	-96.5	-96.5	0.16 (1)	10.00			
D- C	0 / 0	-18.5	-18.5	0.16 (4)	10.00			

[M]

DESIGN CRITERIA

SPECIFIED LOADS:

TOP CH.	LL	=	21.0	PSF
	DL	=	6.0	PSF
BOT CH.	LL	=	0.0	PSF
	DL	=	7.4	PSF
TOTAL LOAD		=	34.4	PSF

SPACING = 24.0 IN. C/C

THIS TRUSS IS DESIGNED FOR RESIDENTIAL OR SMALL BUILDING REQUIREMENTS OF PART 9, NBCC 2015

THIS DESIGN COMPLIES WITH:
- PART 9 OF BCBC 2018 , ABC 2019
- PART 9 OF OBC 2012 (2019 AMENDMENT)
- CSA 086-14
- TPIC 2014

(55 % OF 23.0 P.S.F. G.S.L. PLUS 8.4 P.S.F. RAIN LOAD) EQUALS 21.0 P.S.F. SPECIFIED ROOF LIVE LOAD

ALLOWABLE DEFL.(TL)= L/360 (0.19")
CALCULATED VERT. DEFL.(TL) = L/ 999 (0.04")

CANTILEVER DEFLECTION:
ALLOWABLE DEFL.(LL)= L/120 (0.19")
CALCULATED VERT. DEFL.(LL) = L/ 999 (0.01")
ALLOWABLE DEFL.(TL)= L/120 (0.19")
CALCULATED VERT. DEFL.(TL) = L/ 999 (0.01")

CSI: TC=0.46/1.00 (A-B:1) , BC=0.16/1.00 (C-D:4) , WB=0.00/1.00 (A-C:1) , SSI=0.15/1.00 (A-B:1)

DOL LUMBER=1.00 NAIL=1.00 LS BEND=1.10 COMP=1.10 SHEAR=1.10 TENS= 1.10

COMPANION LIVE LOAD FACTOR = 1.00

TRUSS PLATE MANUFACTURER IS NOT RESPONSIBLE FOR QUALITY CONTROL IN THE TRUSS MANUFACTURING PLANT .

NAIL VALUES

PLATE	GRIP(DRY) (PSI) MAX	MIN	SHEAR (PLI) MAX	MIN	SECTION (PLI) MAX	MIN
MT20	650	371	1747	788	1987	1873

PLATE PLACEMENT TOL. = 0.250 inches

PLATE ROTATION TOL. = 5.0 Deg.

JSI GRIP= 0.20 (A) (INPUT = 0.90)
JSI METAL= 0.05 (D) (INPUT = 1.00)

JOB NAME	TRUSS NAME	QUANTITY	PLY	JOB DESC.	DRWG NO.
318404	J03		1	TRUSS DESC. JT 45147	E20035337

Alpa Roof Truss, Maple

Version 8.310 S Oct 29 2019 MiTek Industries, Inc. Tue Mar 24 15:05:06 2020 Page 1

ID:MF8iiriaTok7DlbpT4B71Xys4PG-rucKt97GuAC54x2ZLn1M i9zKWcENui4qzN2TlzXiER

Scale = 1:33.3

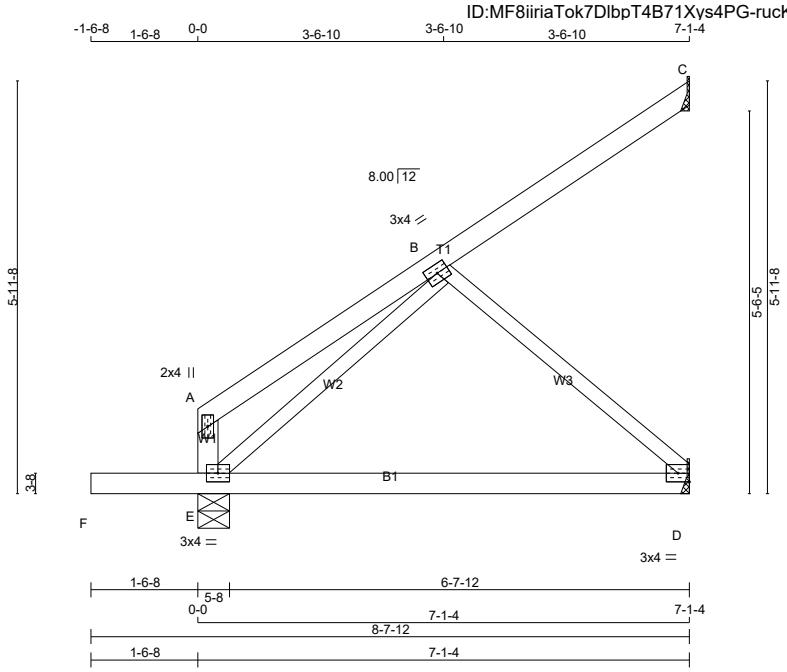

TOTAL WEIGHT = 10 X 28 = 280 lb

LUMBER

N. L. G. A. RULES

CHORDS	SIZE		LUMBER	DESCR.
E - A	2x4	DRY	No.2	SPF
A - C	2x4	DRY	No.2	SPF
F - D	2x4	DRY	No.2	SPF
ALL WEBS	2x3	DRY	No.2	SPF

DRY: SEASONED LUMBER.

PLATES (table is in inches)

JT	TYPE	PLATES	W	LEN	Y	X
A	TMV+p	MT20	2.0	4.0		
B	TMWW-t	MT20	3.0	4.0		
D	BMW1-t	MT20	3.0	4.0		Edge
E	BMVW1-t	MT20	3.0	4.0		

Edge - INDICATES REFERENCE CORNER OF PLATE TOUCHES EDGE OF CHORD.

LATERAL BRACE(S) SHOWN SHALL BE 2X4 SPF#2

DIMENSIONS, SUPPORTS AND LOADINGS SPECIFIED BY FABRICATOR TO BE VERIFIED BY BUILDING DESIGNER

BEARINGS

JT	FACTORED GROSS REACTION VERT	HORZ	MAXIMUM FACTORED GROSS REACTION DOWN	HORZ	UPLIFT	INPUT BRG IN-SX	REQRD BRG IN-SX
E	489	0	489	0	0	5-8	1-8
C	110	0	110	0	0	MECHANICAL	
D	233	0	233	0	0	MECHANICAL	

A SUITABLE HANGER/MECHANICAL CONNECTION IS REQUIRED AT JOINT C, D. MINIMUM BEARING LENGTH AT JOINT C = 1-8, JOINT D = 1-8.

BEVELED PLATE OR SHIM REQUIRED TO PROVIDE FULL BEARING SURFACE WITH TRUSS CHORD AT JT(S): C

UNFACTORED REACTIONS

JT	1ST LCASE COMBINED	MAX./MIN. COMPONENT REACTIONS SNOW	LIVE	PERM.LIVE	WIND	DEAD	SOIL
E	348	213 / 0	0 / 0	0 / 0	0 / 0	136 / 0	0 / 0
C	76	59 / 0	0 / 0	0 / 0	0 / 0	17 / 0	0 / 0
D	169	91 / 0	0 / 0	0 / 0	0 / 0	78 / 0	0 / 0

BEARING MATERIAL TO BE SPF NO.2 OR BETTER AT JOINT(S) E

BRACING

TOP CHORD TO BE SHEATHED OR MAX. PURLIN SPACING = 6.25 FT.
MAX. UNBRACED BOTTOM CHORD LENGTH = 10.00 FT OR RIGID CEILING DIRECTLY APPLIED.

ALL PITCH BREAKS AND PERIMETER CORNER JOINTS MUST BE LATERALLY RESTRAINED.

LOADING

TOTAL LOAD CASES: (4)

CHORDS

MEMB. FR-TO	MAX. FACTORED FORCE (LBS)	FACTORED VERT. LOAD LC1 (PLF) FROM	TO	MAX CSI (LC)	MAX. UNBRAC LENGTH
E- A	-100 / 0	0.0	0.0	0.01 (1)	7.81
A- B	0 / 19	-78.0	-78.0	0.16 (1)	10.00
B- C	-18 / 0	-78.0	-78.0	0.12 (1)	6.25
F- E	0 / 0	-96.5	-96.5	0.16 (1)	10.00
E- D	0 / 189	-18.5	-18.5	0.28 (4)	10.00

WEBS

MEMB. FR-TO	MAX. FACTORED FORCE (LBS)	MAX CSI (LC)
E- B	-258 / 0	0.09 (1)
B- D	-253 / 0	0.10 (1)

[M][F]

DESIGN CRITERIA

SPECIFIED LOADS:

TOP CH.	LL	=	21.0	PSF
	DL	=	6.0	PSF
BOT CH.	LL	=	0.0	PSF
	DL	=	7.4	PSF
TOTAL LOAD		=	34.4	PSF

SPACING = 24.0 IN. C/C

THIS TRUSS IS DESIGNED FOR RESIDENTIAL OR SMALL BUILDING REQUIREMENTS OF PART 9, NBCC 2015

THIS DESIGN COMPLIES WITH:
- PART 9 OF BCBC 2018 , ABC 2019
- PART 9 OF OBC 2012 (2019 AMENDMENT)
- CSA 086-14
- TPIC 2014

(55 % OF 23.0 P.S.F. G.S.L. PLUS 8.4 P.S.F. RAIN LOAD) EQUALS 21.0 P.S.F. SPECIFIED ROOF LIVE LOAD

ALLOWABLE DEFL.(TL)= L/360 (0.23")
CALCULATED VERT. DEFL.(TL) = L/ 768 (0.11")

CANTILEVER DEFLECTION:
ALLOWABLE DEFL.(LL)= L/120 (0.19")
CALCULATED VERT. DEFL.(LL) = L/ 999 (0.01")
ALLOWABLE DEFL.(TL)= L/120 (0.19")
CALCULATED VERT. DEFL.(TL) = L/ 999 (0.01")

CSI: TC=0.16/1.00 (A-B:1) , BC=0.28/1.00 (D-E:4) , WB=0.10/1.00 (B-D:1) , SSI=0.12/1.00 (E-F:1)

DOL LUMBER=1.00 NAIL=1.00 LS BEND=1.10 COMP=1.10 SHEAR=1.10 TENS= 1.10

COMPANION LIVE LOAD FACTOR = 1.00

TRUSS PLATE MANUFACTURER IS NOT RESPONSIBLE FOR QUALITY CONTROL IN THE TRUSS MANUFACTURING PLANT .

NAIL VALUES

PLATE	GRIP(DRY) (PSI) MAX	MIN	SHEAR (PLI) MAX	MIN	SECTION (PLI) MAX	MIN
MT20	650	371	1747	788	1987	1873

PLATE PLACEMENT TOL. = 0.250 inches

PLATE ROTATION TOL. = 5.0 Deg.

JSI GRIP= 0.32 (E) (INPUT = 0.90)
JSI METAL= 0.07 (E) (INPUT = 1.00)

JOB NAME	TRUSS NAME	QUANTITY	PLY	JOB DESC.	DRWG NO.
343177	H10T		1	TRUSS DESC. JT 45147	E22052734

Alpa Roof Truss, Maple

Version 8.530 S Feb 23 2022 MiTek Industries, Inc. Tue Jun 7 11:59:26 2022 Page 1
ID:MF8iiriaTok7DlbpT4B71Xys4PG-6G 2E?ykx1u4AuG5RWk6KWB7vfQbrqG Y?TKPxz8hqV

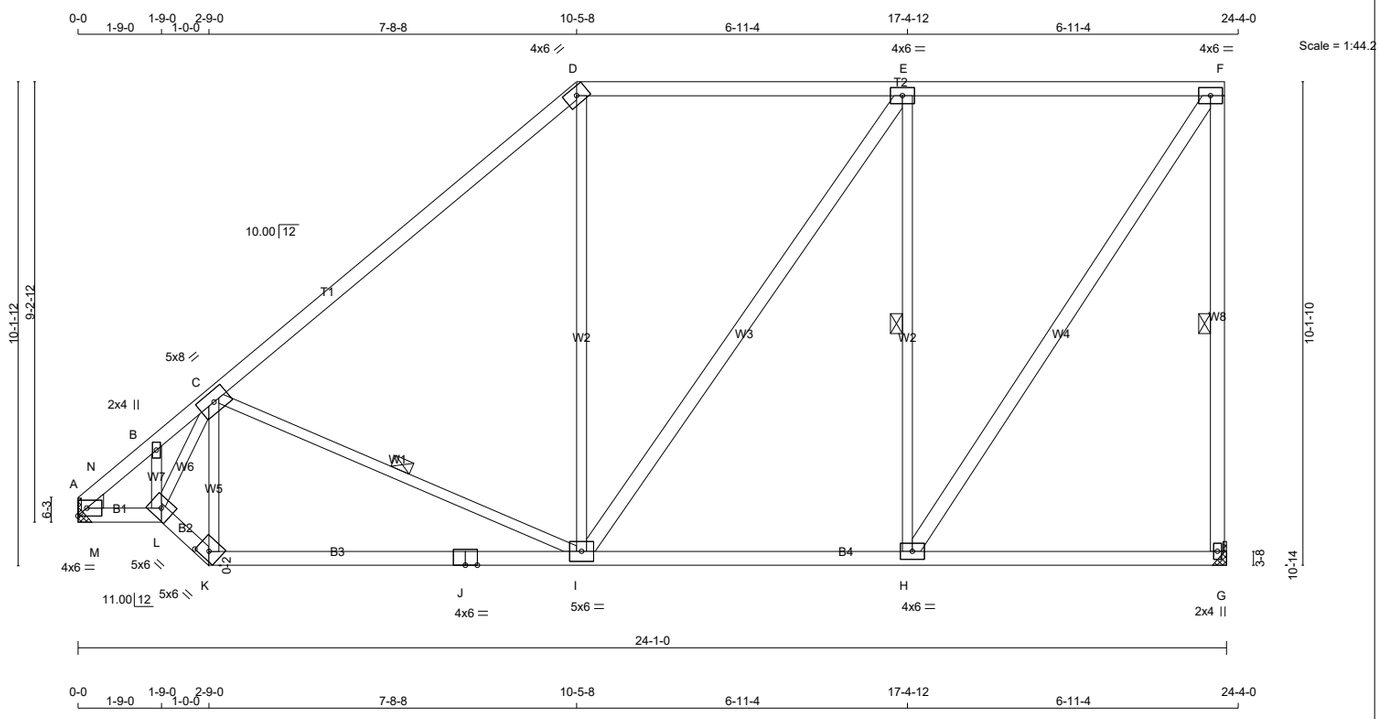

TOTAL WEIGHT = 5 X 125 = 624 lb
[M]

LUMBER
N. L. G. A. RULES

CHORDS	SIZE		LUMBER	DESCR.
A - D	2x4	DRY	No.2	SPF
D - F	2x4	DRY	No.2	SPF
G - F	2x4	DRY	No.2	SPF
A - L	2x4	DRY	No.2	SPF
L - K	2x4	DRY	No.2	SPF
K - J	2x4	DRY	No.2	SPF
J - G	2x4	DRY	No.2	SPF
ALL WEBS	2x3	DRY	No.2	SPF
EXCEPT				
I - E	2x4	DRY	No.2	SPF
H - F	2x4	DRY	No.2	SPF

DRY: SEASONED LUMBER.

PLATES (table is in inches)

JT	TYPE	PLATES	W	LEN	Y	X
A	TMBH1-l	MT20	4.0	6.0		Edge
B	TMW+w	MT20	2.0	4.0		
C	TMWWW-t	MT20	5.0	8.0		
D	TTW-h	MT20	4.0	6.0		
E	TMWW-t	MT20	4.0	6.0		
F	TMVW-t	MT20	4.0	6.0		
G	BMV1+p	MT20	2.0	4.0		
H	BMWW-t	MT20	4.0	6.0		
I	BMWWW-t	MT20	5.0	6.0		
J	BS-t	MT20	4.0	6.0		
K	BBW-h	MT20	5.0	6.0	2.00	3.00
L	BBWW-h	MT20	5.0	6.0		

Edge - INDICATES REFERENCE CORNER OF PLATE TOUCHES EDGE OF CHORD.

LATERAL BRACE(S) SHOWN SHALL BE 2X4 SPF#2

LICENSED PROFESSIONAL ENGINEER
Y. WIDYA
100225448
06/07/2022
PROVINCE OF ONTARIO

DIMENSIONS, SUPPORTS AND LOADINGS SPECIFIED BY FABRICATOR TO BE VERIFIED BY BUILDING DESIGNER

BEARINGS

JT	FACTORED GROSS REACTION VERT	HORZ	MAXIMUM FACTORED GROSS REACTION DOWN	HORZ	UPLIFT	INPUT BRG IN-SX	REQRD BRG IN-SX	HEEL WEDGE
G	1306	0	1306	0	0	MECHANICAL		
A	1217	0	1217	0	0	MECHANICAL		2x4 L

A SUITABLE HANGER/MECHANICAL CONNECTION IS REQUIRED AT JOINT G, A. MINIMUM BEARING LENGTH AT JOINT G = 1-8, JOINT A = 3-8.

UNFACTORED REACTIONS

JT	1ST LCASE COMBINED	MAX./MIN. COMPONENT REACTIONS SNOW	LIVE	PERM.LIVE	WIND	DEAD	SOIL
G	944	505 / 0	0 / 0	0 / 0	0 / 0	439 / 0	0 / 0
A	873	505 / 0	0 / 0	0 / 0	0 / 0	368 / 0	0 / 0

BRACING
FOR SECTION D-F, MAX. PURLIN SPACING = 2.00 FT.
FOR OTHER SECTIONS, TOP CHORD TO BE SHEATHED OR MAX. PURLIN SPACING = 4.55 FT.
MAX. UNBRACED BOTTOM CHORD LENGTH = 10.00 FT OR RIGID CEILING DIRECTLY APPLIED.

ALL PITCH BREAKS AND PERIMETER CORNER JOINTS MUST BE LATERALLY RESTRAINED.

1 LATERAL BRACE(S) AT 1/ 2 LENGTH OF F-G, C-I, E-H.

END VERTICAL(S) MUST BE SHEATHED OR HAVE BRACES AS INDICATED IN THE MAX. UNBRACED LENGTH COLUMN OF THE TABLE BELOW

LOADING
TOTAL LOAD CASES: (4)

CHORDS

MEMB. FR-TO	MAX. FACTORED FORCE (LBS)	FACTORED VERT. LOAD LC1 (PLF) FROM	TO	MAX CSI (LC)	MAX. UNBRAC LENGTH
A- N	-1633 / 0	-78.0	-78.0	0.13 (1)	5.05
N- B	-1573 / 0	-78.0	-78.0	0.27 (1)	4.94
B- C	-1207 / 0	-78.0	-78.0	0.68 (1)	4.55
C- D	-1041 / 0	-78.0	-78.0	0.88 (1)	4.86
D- E	-768 / 0	-93.0	-93.0	0.78 (1)	2.00
E- F	-693 / 0	-93.0	-93.0	0.77 (1)	2.00
G- F	-1256 / 0	0.0	0.0	0.63 (1)	5.74
A- M	0 / 1100	-18.5	-18.5	0.19 (1)	10.00
M- L	0 / 1100	-18.5	-18.5	0.19 (1)	10.00
L- K	0 / 1364	-18.5	-18.5	0.22 (1)	10.00
K- J	0 / 1034	-18.5	-18.5	0.35 (4)	10.00
J- I	0 / 1034	-18.5	-18.5	0.35 (4)	10.00
I- H	0 / 693	-18.5	-18.5	0.32 (4)	10.00
H- G	0 / 0	-18.5	-18.5	0.18 (4)	10.00

WEBS

MEMB. FR-TO	MAX. FACTORED FORCE (LBS)	MAX CSI (LC)
L- B	0 / 575	0.13 (1)
L- C	0 / 423	0.10 (1)
K- C	-848 / 0	0.19 (1)
C- I	-293 / 0	0.14 (1)
I- D	0 / 160	0.05 (4)
I- E	0 / 133	0.02 (1)
H- E	-894 / 0	0.63 (1)
H- F	0 / 1238	0.20 (1)
M- N	0 / 43	0.00 (1)

DESIGN CRITERIA

SPECIFIED LOADS:

TOP CH.	LL	=	21.0	PSF
	DL	=	6.0	PSF
BOT CH.	LL	=	0.0	PSF
	DL	=	7.4	PSF
TOTAL LOAD		=	34.4	PSF

SPACING = 24.0 IN. C/C

LOADING IN FLAT SECTION BASED ON PIGGYBACK TRUSS WITH SLOPES OF 6.00/12 AND -6.00/12 AND RESPECTIVE HEEL HEIGHTS OF 0-0 AND 0-0 AND AN ADDITIONAL DEAD LOAD OF 6.0 P.S.F.

THIS TRUSS IS DESIGNED FOR RESIDENTIAL OR SMALL BUILDING REQUIREMENTS OF PART 9, NBCC 2015

THIS DESIGN COMPLIES WITH:
- PART 9 OF BCBC 2018 , ABC 2019
- PART 9 OF OBC 2012 (2019 AMENDMENT)
- CSA 086-14
- TPIC 2014

(55 % OF 23.0 P.S.F. G.S.L. PLUS 8.4 P.S.F. RAIN LOAD) EQUALS 21.0 P.S.F. SPECIFIED ROOF LIVE LOAD

ALLOWABLE DEFL.(LL)= L/360 (0.80")
CALCULATED VERT. DEFL.(LL) = L/ 999 (0.03")
ALLOWABLE DEFL.(TL)= L/360 (0.80")
CALCULATED VERT. DEFL.(TL) = L/ 999 (0.14")

CSI: TC=0.88/1.00 (C-D:1) , BC=0.35/1.00 (I-K:4) , WB=0.63/1.00 (E-H:1) , SSI=0.34/1.00 (B-C:1)

DOL LUMBER=1.00 NAIL=1.00 LS BEND=1.10 COMP=1.10 SHEAR=1.10 TENS= 1.10

COMPANION LIVE LOAD FACTOR = 1.00

AUTOSOLVE LEFT HEEL ONLY

TRUSS PLATE MANUFACTURER IS NOT RESPONSIBLE FOR QUALITY CONTROL IN THE TRUSS MANUFACTURING PLANT .

NAIL VALUES

PLATE	GRIP(DRY) (PSI) MAX	MIN	SHEAR (PLI) MAX	MIN	SECTION (PLI) MAX	MIN
MT20	650	371	1747	788	1987	1873

PLATE PLACEMENT TOL. = 0.250 inches

PLATE ROTATION TOL. = 5.0 Deg.

JSI GRIP= 0.82 (F) (INPUT = 0.90)
JSI METAL= 0.30 (J) (INPUT = 1.00)

JOB NAME	TRUSS NAME	QUANTITY	PLY	JOB DESC.	DRWG NO.
343177	G01		1	TRUSS DESC. JT 45147	E22052735

Alpa Roof Truss, Maple

Version 8.530 S Feb 23 2022 MiTek Industries, Inc. Tue Jun 7 11:59:08 2022 Page 1

ID: 01SUN7GZ3P25I3oMs5H1nyKJTP-eouFTrkSAVdd07udOkPtbjR4uO9Xda1LPC6Nm z8hqn

Scale = 1:51.3

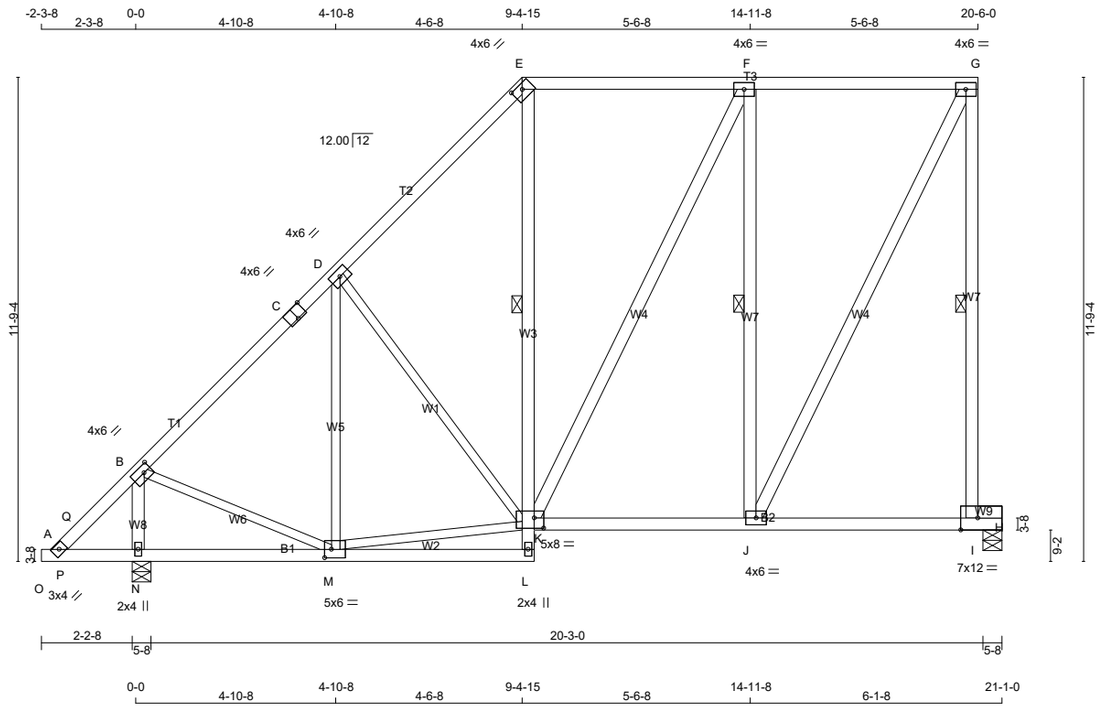

TOTAL WEIGHT = 4 X 143 = 571 lb [M]

LUMBER

N. L. G. A. RULES

CHORDS	SIZE		LUMBER	DESCR.
A - C	2x4	DRY	1650F 1.5E	SPF
C - E	2x4	DRY	1650F 1.5E	SPF
E - G	2x4	DRY	No.2	SPF
I - G	2x4	DRY	No.2	SPF
O - L	2x4	DRY	No.2	SPF
K - H	2x4	DRY	No.2	SPF
I - H	2x4	DRY	No.2	SPF
ALL WEBS	2x4	DRY	No.2	SPF
EXCEPT				
M - D	2x3	DRY	No.2	SPF
M - K	2x3	DRY	No.2	SPF
D - K	2x3	DRY	No.2	SPF
B - M	2x3	DRY	No.2	SPF

DRY: SEASONED LUMBER.

PLATES (table is in inches)

JT	TYPE	PLATES	W	LEN	Y	X
A	TBM-h	MT20	3.0	4.0		
B	TMWW-t	MT20	4.0	6.0	2.00	2.25
C	TS-t	MT20	4.0	6.0	Edge	3.00
D	TMWW-t	MT20	4.0	6.0		
E	TTW-h	MT20	4.0	6.0	1.50	3.00
F	TMWW-t	MT20	4.0	6.0		
G	TMVW-t	MT20	4.0	6.0		
I	BMVW-t	MT20	7.0	12.0	Edge	5.00
J	BMWW-t	MT20	4.0	6.0		
K	BWMWWW*-I	MT20	5.0	8.0	3.00	2.75
L	BMW+w	MT20	2.0	4.0		
M	BMWWW-t	MT20	5.0	6.0	2.50	2.00
N	BMW1+w	MT20	2.0	4.0		

Edge - INDICATES REFERENCE CORNER OF PLATE TOUCHES EDGE OF CHORD.

LATERAL BRACE(S) SHOWN SHALL BE 2X4 SPF#2

DIMENSIONS, SUPPORTS AND LOADINGS SPECIFIED BY FABRICATOR TO BE VERIFIED BY BUILDING DESIGNER

BEARINGS

JT	FACTORED GROSS REACTION VERT	HORZ	MAXIMUM FACTORED GROSS REACTION DOWN	HORZ	UPLIFT	INPUT BRG IN-SX	REQRD BRG IN-SX
H	1076	0	1076	0	0	5-8	1-8
N	1286	0	1286	0	0	5-8	1-8

UNFACTORED REACTIONS

JT	1ST LCASE COMBINED	MAX./MIN. COMPONENT REACTIONS SNOW	LIVE	PERM.LIVE	WIND	DEAD	SOIL
H	778	413 / 0	0 / 0	0 / 0	0 / 0	365 / 0	0 / 0
N	922	535 / 0	0 / 0	0 / 0	0 / 0	387 / 0	0 / 0

BEARING MATERIAL TO BE SPF NO.2 OR BETTER AT JOINT(S) H, N

BRACING

FOR SECTION E-G, MAX. PURLIN SPACING = 2.00 FT.
FOR OTHER SECTIONS, TOP CHORD TO BE SHEATHED OR MAX. PURLIN SPACING = 6.25 FT.
MAX. UNBRACED BOTTOM CHORD LENGTH = 6.25 FT OR RIGID CEILING DIRECTLY APPLIED.

MAX. UNBRACED INTERIOR CHORD LENGTH = 10.00 FT

ALL PITCH BREAKS AND PERIMETER CORNER JOINTS MUST BE LATERALLY RESTRAINED.

1 LATERAL BRACE(S) AT 1/ 2 LENGTH OF G-I, E-K, F-J.

END VERTICAL(S) MUST BE SHEATHED OR HAVE BRACES AS INDICATED IN THE MAX. UNBRACED LENGTH COLUMN OF THE TABLE BELOW

LOADING

TOTAL LOAD CASES: (4)

CHORDS

MEMB. FR-TO	MAX. FORCE (LBS)	FACTORED VERT. LOAD LC1 (PLF) FROM	TO	MAX CSI (LC)	MAX. UNBRAC LENGTH
A- Q	0 / 46	-78.0	-78.0	0.01 (4)	10.00
Q- B	0 / 101	-78.0	-78.0	0.14 (1)	10.00
B- C	-811 / 0	-78.0	-78.0	0.22 (1)	6.25
C- D	-811 / 0	-78.0	-78.0	0.22 (1)	6.25
D- E	-762 / 0	-78.0	-78.0	0.22 (1)	6.25
E- F	-521 / 0	-93.0	-93.0	0.49 (1)	2.00
F- G	-502 / 0	-93.0	-93.0	0.49 (1)	2.00
I- G	-1166 / 0	0.0	0.0	0.73 (1)	5.91
O- A	0 / 0	-33.5	-33.5	0.00 (4)	10.00
A- P	-39 / 0	-18.5	-18.5	0.01 (4)	6.25
P- N	-39 / 0	-18.5	-18.5	0.07 (4)	6.25
N- M	-39 / 0	-18.5	-18.5	0.10 (4)	6.25
M- L	0 / 16	-18.5	-18.5	0.10 (4)	10.00
K- J	0 / 502	-18.5	-18.5	0.38 (1)	10.00
J- I	0 / 0	-18.5	-18.5	0.85 (1)	10.00
I- H	0 / 0	-18.5	-18.5	0.35 (1)	10.00

WEBS

MEMB. FR-TO	MAX. FORCE (LBS)	MAX CSI (LC)
D- K	-269 / 0	0.25 (1)
L- K	0 / 40	0.02 (1)
K- E	0 / 186	0.05 (1)
K- F	0 / 43	0.01 (1)
J- F	-677 / 0	0.42 (1)
J- G	0 / 1093	0.18 (1)
M- K	0 / 576	0.13 (1)
D- K	-112 / 0	0.14 (1)
N- B	-1203 / 0	0.13 (1)
B- M	0 / 678	0.15 (1)
P- Q	-7 / 0	0.00 (1)

DESIGN CRITERIA

SPECIFIED LOADS:

TOP CH.	LL	=	21.0	PSF
	DL	=	6.0	PSF
BOT CH.	LL	=	0.0	PSF
	DL	=	7.4	PSF
TOTAL LOAD		=	34.4	PSF

SPACING = 24.0 IN. C/C

LOADING IN FLAT SECTION BASED ON PIGGYBACK TRUSS WITH SLOPES OF 6.00/12 AND -6.00/12 AND RESPECTIVE HEEL HEIGHTS OF 0-0 AND 0-0 AND AN ADDITIONAL DEAD LOAD OF 6.0 P.S.F.

THIS TRUSS IS DESIGNED FOR RESIDENTIAL OR SMALL BUILDING REQUIREMENTS OF PART 9, NBCC 2015

THIS DESIGN COMPLIES WITH:
- PART 9 OF BCBC 2018 , ABC 2019
- PART 9 OF OBC 2012 (2019 AMENDMENT)
- CSA 086-14
- TPIC 2014

(55 % OF 23.0 P.S.F. G.S.L. PLUS 8.4 P.S.F. RAIN LOAD) EQUALS 21.0 P.S.F. SPECIFIED ROOF LIVE LOAD

ALLOWABLE DEFL.(LL)= L/360 (0.70")
CALCULATED VERT. DEFL.(LL) = L/ 999 (0.14")
ALLOWABLE DEFL.(TL)= L/360 (0.70")
CALCULATED VERT. DEFL.(TL) = L/ 740 (0.34")

CANTILEVER DEFLECTION:
ALLOWABLE DEFL.(LL)= L/1261 (0.19")
CALCULATED VERT. DEFL.(LL) = L/ 999 (0.01")
ALLOWABLE DEFL.(TL)= L/1261 (0.19")
CALCULATED VERT. DEFL.(TL) = L/ 999 (0.01")

CSI: TC=0.73/1.00 (G-I:1) , BC=0.85/1.00 (I-J:1) , WB=0.42/1.00 (F-J:1) , SSI=0.42/1.00 (H-I:1)

DOL LUMBER=1.00 NAIL=1.00 LS BEND=1.10 COMP=1.10 SHEAR=1.10 TENS= 1.10

COMPANION LIVE LOAD FACTOR = 1.00

TRUSS PLATE MANUFACTURER IS NOT RESPONSIBLE FOR QUALITY CONTROL IN THE TRUSS MANUFACTURING PLANT .

NAIL VALUES

PLATE	GRIP(DRY) (PSI) MAX	MIN	SHEAR (PLI) MAX	MIN	SECTION (PLI) MAX	MIN
MT20	650	371	1747	788	1987	1873

PLATE PLACEMENT TOL. = 0.250 inches

PLATE ROTATION TOL. = 5.0 Deg.

JSI GRIP= 0.85 (G) (INPUT = 0.90)
JSI METAL= 0.30 (I) (INPUT = 1.00)

JOB NAME	TRUSS NAME	QUANTITY	PLY	JOB DESC.	DRWG NO.
343177	G01G		1	TRUSS DESC. JT 45147	E22052736

Alpa Roof Truss, Maple

Version 8.530 S Feb 23 2022 MiTek Industries, Inc. Tue Jun 7 11:59:10 2022 Page 1

ID: 01SUN7GZ3P25I3oMs5H1nyKJTP-aB0?uXlii6tLFQ20V8RLh8WbmC1d5X?etWbUqtz8hqI

Scale = 1:52.6

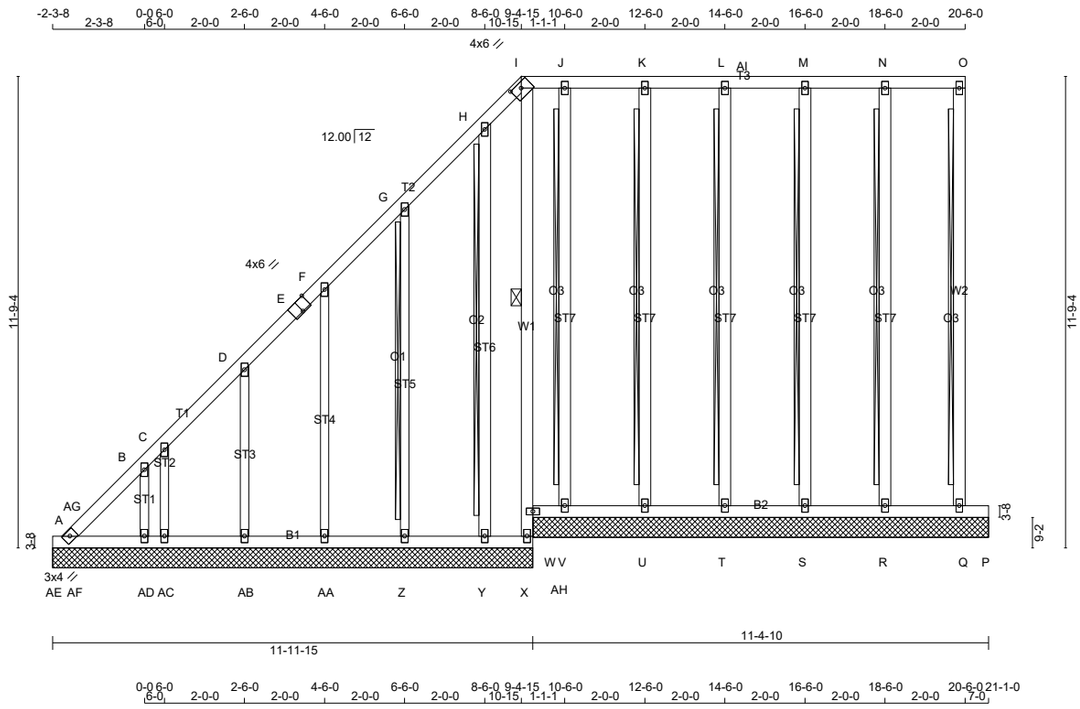

TOTAL WEIGHT = 172 lb

[M]

LUMBER

N. L. G. A. RULES

CHORDS	SIZE		LUMBER	DESCR.
A - E	2x4	DRY	No.2	SPF
E - I	2x4	DRY	No.2	SPF
I - O	2x4	DRY	No.2	SPF
Q - O	2x4	DRY	No.2	SPF
AE- X	2x4	DRY	No.2	SPF
W - P	2x4	DRY	No.2	SPF
ALL WEBS	2x4	DRY	No.2	SPF
EXCEPT				
AD- B	2x3	DRY	No.2	SPF
Z - G	2x3	DRY	No.2	SPF
AA- F	2x3	DRY	No.2	SPF
AB- D	2x3	DRY	No.2	SPF
AC- C	2x3	DRY	No.2	SPF
ALL GABLE WEBS				
	2x4	DRY	No.2	SPF
EXCEPT				
ST1	2x3	DRY	No.2	SPF
ST8	2x3	DRY	No.2	SPF
ST9	2x3	DRY	No.2	SPF
ST10	2x3	DRY	No.2	SPF
ST11	2x3	DRY	No.2	SPF

DRY: SEASONED LUMBER.

GABLE STUDS SPACED AT 2-0-0 OC.

PLATES (table is in inches)

JT	TYPE	PLATES	W	LEN	Y	X
A	TBM1-h	MT20	3.0	4.0		
B, C, D, F, G, H, J, K, L, M, N						
B	TMW+w	MT20	2.0	4.0		
E	TS-t	MT20	4.0	6.0	Edge	3.00
I	TTW-h	MT20	4.0	6.0	1.50	3.00
O	TMV+p	MT20	2.0	4.0		
Q	BMV1+p	MT20	2.0	4.0		
R, S, T, U, V, X, Y, Z, AA, AB, AC, AD						
R	BMW1+w	MT20	2.0	4.0		
W	BWM-I	MT20	2.0	4.0		

Edge - INDICATES REFERENCE CORNER OF PLATE TOUCHES EDGE OF CHORD.

LATERAL BRACE(S) SHOWN SHALL BE 2X4 SPF#2

DIMENSIONS, SUPPORTS AND LOADINGS SPECIFIED BY FABRICATOR TO BE VERIFIED BY BUILDING DESIGNER

BEARINGS

THIS TRUSS DESIGNED FOR CONTINUOUS BEARINGS.

THIS TRUSS REQUIRES RIGID SHEATHING ON EXPOSED FACE.

PROVIDE ANCHORAGE AT BEARING JOINT AE FOR 150 LBS FACTORED UPLIFT
PROVIDE ANCHORAGE AT BEARING JOINT P FOR 150 LBS FACTORED UPLIFT
BEARING MATERIAL TO BE SPF NO.2 OR BETTER AT JOINT(S)

BRACING

FOR SECTION I-O, MAX. PURLIN SPACING = 2.00 FT.
FOR OTHER SECTIONS, TOP CHORD TO BE SHEATHED OR MAX. PURLIN SPACING = 6.25 FT.
MAX. UNBRACED BOTTOM CHORD LENGTH = 10.00 FT OR RIGID CEILING DIRECTLY APPLIED.

MAX. UNBRACED INTERIOR CHORD LENGTH = 6.25 FT

ALL PITCH BREAKS AND PERIMETER CORNER JOINTS MUST BE LATERALLY RESTRAINED.

1 LATERAL BRACE(S) AT 1/ 2 LENGTH OF I-W.
2x4 DRY SPF No.2 T-BRACE AT O-Q, N-R, M-S, L-T, K-U, J-V, H-Y
2x3 DRY SPF No.2 T-BRACE AT G-Z

FASTEN T AND I-BRACES TO NARROW EDGE OF WEB WITH ONE ROW PER PLY OF 3" COMMON WIRE NAILS @ 6" O.C. WITH 3" MINIMUM END DISTANCE. BRACE MUST COVER 90% OF WEB LENGTH.

END VERTICAL(S) MUST BE SHEATHED OR HAVE BRACES AS INDICATED IN THE MAX. UNBRACED LENGTH COLUMN OF THE TABLE BELOW

LOADING

TOTAL LOAD CASES: (4)

CHORDS

MEMB. FR-TO	MAX. FACTORED FORCE (LBS)	FACTORED VERT. LOAD (PLF) FROM	TO	LC1 CSI (LC)	MAX MAX. UNBRAC LENGTH
A-AG	-4 / 0	-78.0	-78.0	0.01 (1)	10.00
AG- B	-23 / 0	-78.0	-78.0	0.02 (1)	6.25
B- C	-16 / 0	-78.0	-78.0	0.03 (1)	6.25
C- D	-12 / 0	-78.0	-78.0	0.04 (1)	6.25
D- E	-9 / 0	-78.0	-78.0	0.04 (1)	10.00
E- F	-9 / 0	-78.0	-78.0	0.04 (1)	10.00
F- G	-5 / 0	-78.0	-78.0	0.04 (1)	10.00
G- H	-6 / 0	-78.0	-78.0	0.04 (1)	10.00
H- I	-14 / 0	-78.0	-78.0	0.02 (1)	6.25
I- J	0 / 0	-93.0	-93.0	0.03 (1)	2.00
J- K	0 / 0	-93.0	-93.0	0.04 (1)	10.00
K- L	0 / 0	-93.0	-93.0	0.04 (1)	10.00
L-AI	0 / 0	-93.0	-93.0	0.04 (1)	10.00
AI- M	0 / 0	-93.0	-93.0	0.04 (1)	10.00
M- N	0 / 0	-93.0	-93.0	0.05 (1)	10.00
N- O	0 / 0	-93.0	-93.0	0.05 (1)	10.00
Q- O	-76 / 0	0.0	0.0	0.06 (1)	7.81
AE- A	0 / 0	-33.5	-33.5	0.04 (1)	10.00
A-AF	0 / 18	-18.5	-18.5	0.04 (1)	10.00
AF-AD	0 / 18	-18.5	-18.5	0.02 (1)	10.00
AD-AC	0 / 14	-18.5	-18.5	0.02 (1)	10.00
AC-AB	0 / 10	-18.5	-18.5	0.02 (4)	10.00
AB-AA	0 / 6	-18.5	-18.5	0.02 (4)	10.00
AA- Z	0 / 4	-18.5	-18.5	0.02 (4)	10.00
Z- Y	0 / 2	-18.5	-18.5	0.02 (4)	10.00
Y- X	0 / 0	-18.5	-18.5	0.01 (4)	10.00
W-AH	0 / 0	-18.5	-18.5	0.00 (1)	10.00
AH- V	0 / 0	-18.5	-18.5	0.01 (4)	10.00
V- U	0 / 0	-18.5	-18.5	0.02 (4)	10.00
U- T	0 / 0	-18.5	-18.5	0.02 (4)	10.00
T- S	0 / 0	-18.5	-18.5	0.01 (4)	10.00
S- R	0 / 0	-18.5	-18.5	0.02 (4)	10.00
R- Q	0 / 0	-18.5	-18.5	0.02 (4)	10.00
Q- P	0 / 0	-18.5	-18.5	0.01 (4)	10.00

WEBS

MEMB. FR-TO	MAX. FACTORED FORCE (LBS)	MAX CSI (LC)
AD- B	-78 / 0	0.01 (1)
R- N	-205 / 0	0.17 (1)
S- M	-184 / 0	0.15 (1)
T- L	-185 / 0	0.15 (1)
U- K	-194 / 0	0.16 (1)
V- J	-154 / 0	0.13 (1)
Y- H	-130 / 0	0.10 (1)
Z- G	-158 / 0	0.20 (1)
AA- F	-153 / 0	0.12 (1)
AB- D	-157 / 0	0.05 (1)
AC- C	-96 / 0	0.02 (1)
X- W	-36 / 0	0.00 (1)
W- I	-54 / 0	0.00 (1)
AF-AG	-108 / 0	0.00 (1)

DESIGN CRITERIA

SPECIFIED LOADS:

TOP CH.	LL	=	21.0	PSF
	DL	=	6.0	PSF
BOT CH.	LL	=	0.0	PSF
	DL	=	7.4	PSF
TOTAL LOAD		=	34.4	PSF

SPACING = 24.0 IN. C/C

LOADING IN FLAT SECTION BASED ON PIGGYBACK TRUSS WITH SLOPES OF 6.00/12 AND -6.00/12 AND RESPECTIVE HEEL HEIGHTS OF 0-0 AND 0-0 AND AN ADDITIONAL DEAD LOAD OF 6.0 P.S.F.

THIS TRUSS IS DESIGNED FOR RESIDENTIAL OR SMALL BUILDING REQUIREMENTS OF PART 9, NBCC 2015

THIS DESIGN COMPLIES WITH:
- PART 9 OF BCBC 2018 , ABC 2019
- PART 9 OF OBC 2012 (2019 AMENDMENT)
- CSA 086-14
- TPIC 2014

(55 % OF 23.0 P.S.F. G.S.L. PLUS 8.4 P.S.F. RAIN LOAD) EQUALS 21.0 P.S.F. SPECIFIED ROOF LIVE LOAD

ALLOWABLE DEFL.(LL)= L/360 (0.19")
CALCULATED VERT. DEFL.(LL) = L/ 999 (0.00")
ALLOWABLE DEFL.(TL)= L/360 (0.19")
CALCULATED VERT. DEFL.(TL) = L/ 999 (0.00")

CSI: TC=0.06/1.00 (O-Q:1) , BC=0.04/1.00 (A-AF:1) , WB=0.20/1.00 (G-Z:1) , SSI=0.10/1.00 (A-AE:1)

DOL LUMBER=1.00 NAIL=1.00 LS BEND=1.10 COMP=1.10 SHEAR=1.10 TENS= 1.10

COMPANION LIVE LOAD FACTOR = 1.00

TRUSS PLATE MANUFACTURER IS NOT RESPONSIBLE FOR QUALITY CONTROL IN THE TRUSS MANUFACTURING PLANT .

NAIL VALUES

PLATE	GRIP(DRY) (PSI) MAX	MIN	SHEAR (PLI) MAX	MIN	SECTION (PLI) MAX	MIN
MT20	650	371	1747	788	1987	1873

PLATE PLACEMENT TOL. = 0.250 inches

PLATE ROTATION TOL. = 5.0 Deg.

JSI GRIP= 0.43 (W) (INPUT = 0.90)
JSI METAL= 0.08 (G) (INPUT = 1.00)

JOB NAME	TRUSS NAME	QUANTITY	PLY	JOB DESC.	DRWG NO.
343177	G02P		1	TRUSS DESC. JT 45147	E22052737

Alpa Roof Truss, Maple

Version 8.530 S Feb 23 2022 MiTek Industries, Inc. Tue Jun 7 11:59:11 2022 Page 1

ID: 01SUN7GZ3P25I3oMs5H1nyKJTP-2NaN5smKTQ?CtadC3szaDM3mkcNsq1wn5AL2NJz8hqk

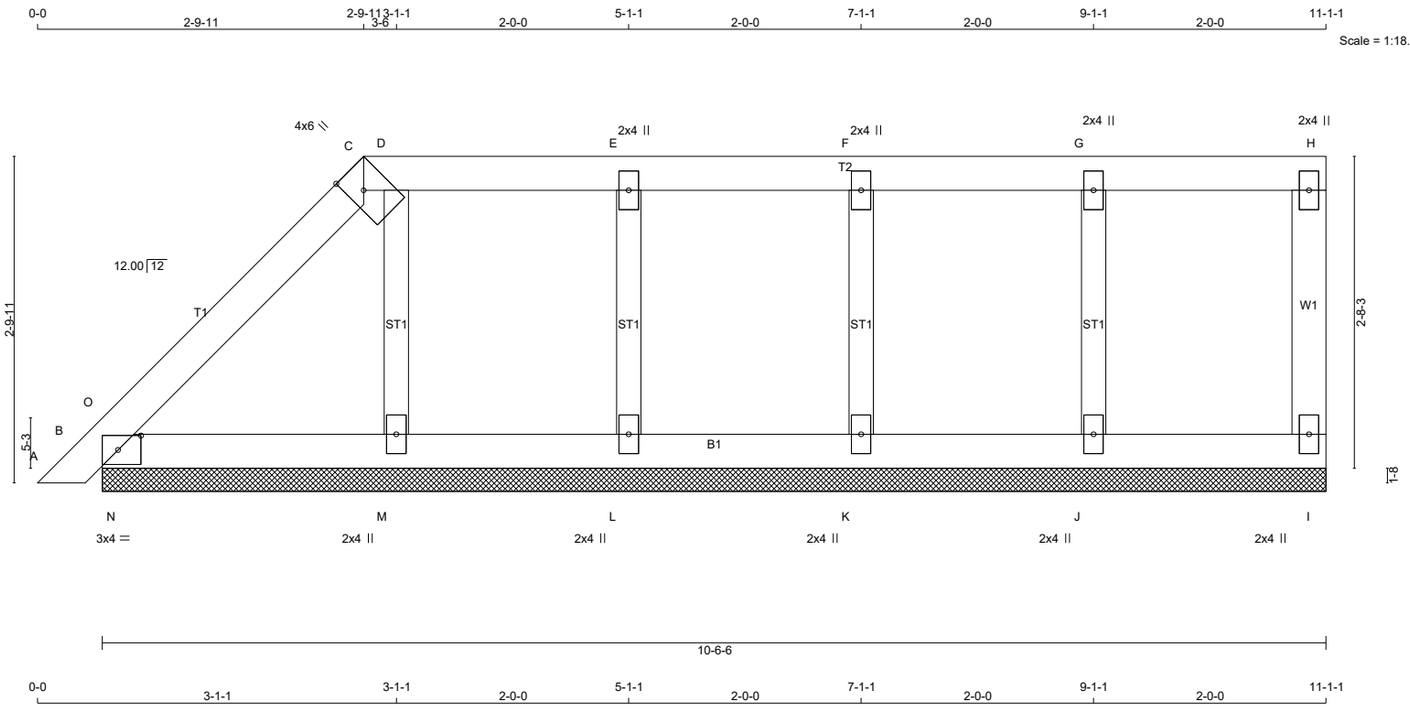

TOTAL WEIGHT = 35 lb

[M]

LUMBER

N. L. G. A. RULES

CHORDS	SIZE		LUMBER	DESCR.
A - C	2x4	DRY	No.2	SPF
C - H	2x4	DRY	No.2	SPF
I - H	2x4	DRY	No.2	SPF
B - I	2x4	DRY	No.2	SPF
ALL WEBS	2x3	DRY	No.2	SPF
ALL GABLE WEBS	2x3	DRY	No.2	SPF

DRY: SEASONED LUMBER.

GABLE STUDS SPACED AT 2-0-0 OC.

PLATES (table is in inches)

JT	TYPE	PLATES	W	LEN	Y	X
B	TMB1-I	MT20	3.0	4.0	1.50	2.50
C						
C	TTW+h	MT20	4.0	6.0	Edge	1.50
D						
E, F, G						
E	TMW+w	MT20	2.0	4.0		
H	TMV+p	MT20	2.0	4.0		
I	BMV1+p	MT20	2.0	4.0		
J, K, L, M						
J	BMW1+w	MT20	2.0	4.0		

Edge - INDICATES REFERENCE CORNER OF PLATE TOUCHES EDGE OF CHORD.

DIMENSIONS, SUPPORTS AND LOADINGS SPECIFIED BY FABRICATOR TO BE VERIFIED BY BUILDING DESIGNER

BEARINGS

THIS TRUSS DESIGNED FOR CONTINUOUS BEARINGS.

THIS TRUSS REQUIRES RIGID SHEATHING ON EXPOSED FACE.

BEARING MATERIAL TO BE SPF NO.2 OR BETTER AT JOINT(S)

BRACING

TOP CHORD TO BE SHEATHED OR MAX. PURLIN SPACING = 10.00 FT.
MAX. UNBRACED BOTTOM CHORD LENGTH = 10.00 FT OR RIGID CEILING DIRECTLY APPLIED.

ALL PITCH BREAKS AND PERIMETER CORNER JOINTS MUST BE LATERALLY RESTRAINED.

LOADING

TOTAL LOAD CASES: (4)

CHORDS

MEMB. FR-TO	MAX. FORCE (LBS)	FACTORED VERT. LOAD (PLF) FROM	TO	LC1	MAX CSI (LC)	MAX. UNBRAC LENGTH
A- B	0 / 11	-78.0	-78.0	0.01 (1)	10.00	
B- O	-6 / 44	-78.0	-78.0	0.02 (1)	10.00	
O- C	-4 / 0	-78.0	-78.0	0.05 (1)	10.00	
C- D	0 / 9	-78.0	-78.0	0.03 (1)	10.00	
D- E	0 / 0	-78.0	-78.0	0.04 (1)	10.00	
E- F	0 / 0	-78.0	-78.0	0.04 (1)	10.00	
F- G	0 / 0	-78.0	-78.0	0.04 (1)	10.00	
G- H	0 / 0	-78.0	-78.0	0.04 (1)	10.00	
I- H	-62 / 0	0.0	0.0	0.01 (1)	7.81	
B- N	0 / 0	-18.5	-18.5	0.04 (1)	10.00	
N- M	0 / 0	-18.5	-18.5	0.04 (1)	10.00	
M- L	0 / 0	-18.5	-18.5	0.03 (4)	10.00	
L- K	0 / 0	-18.5	-18.5	0.01 (4)	10.00	
K- J	0 / 0	-18.5	-18.5	0.02 (4)	10.00	
J- I	0 / 0	-18.5	-18.5	0.02 (4)	10.00	

WEBS

MEMB. FR-TO	MAX. FORCE (LBS)	MAX CSI (LC)
J- G	-175 / 0	0.03 (1)
K- F	-151 / 0	0.02 (1)
L- E	-158 / 0	0.03 (1)
M- D	-173 / 0	0.03 (1)
N- O	-147 / 0	0.00 (1)

DESIGN CRITERIA

SPECIFIED LOADS:

TOP CH.	LL	=	21.0	PSF
	DL	=	6.0	PSF
BOT CH.	LL	=	0.0	PSF
	DL	=	7.4	PSF
TOTAL LOAD		=	34.4	PSF

SPACING = 24.0 IN. C/C

LOADING IN FLAT SECTION BASED ON A SLOPE OF 2.00/12 MINIMUM

THIS TRUSS IS DESIGNED FOR RESIDENTIAL OR SMALL BUILDING REQUIREMENTS OF PART 9, NBCC 2015

THIS DESIGN COMPLIES WITH:
- PART 9 OF BCBC 2018 , ABC 2019
- PART 9 OF OBC 2012 (2019 AMENDMENT)
- CSA 086-14
- TPIC 2014

(55 % OF 23.0 P.S.F. G.S.L. PLUS 8.4 P.S.F. RAIN LOAD) EQUALS 21.0 P.S.F. SPECIFIED ROOF LIVE LOAD

CSI: TC=0.05/1.00 (C-O:1) , BC=0.04/1.00 (B-N:1) , WB=0.03/1.00 (G-J:1) , SSI=0.12/1.00 (B-N:1)

DOL LUMBER=1.00 NAIL=1.00 LS BEND=1.10 COMP=1.10 SHEAR=1.10 TENS= 1.10

COMPANION LIVE LOAD FACTOR = 1.00

TRUSS PLATE MANUFACTURER IS NOT RESPONSIBLE FOR QUALITY CONTROL IN THE TRUSS MANUFACTURING PLANT .

NAIL VALUES

PLATE	GRIP(DRY) (PSI) MAX	MIN	SHEAR (PLI) MAX	MIN	SECTION (PLI) MAX	MIN
MT20	650	371	1747	788	1987	1873

PLATE PLACEMENT TOL. = 0.250 inches

PLATE ROTATION TOL. = 5.0 Deg.

JSI GRIP= 0.13 (B) (INPUT = 0.90)
JSI METAL= 0.04 (J) (INPUT = 1.00)

LATERAL BRACE(S) SHOWN SHALL BE 2X4 SPF#2

JOB NAME	TRUSS NAME	QUANTITY	PLY	JOB DESC.	DRWG NO.
343177	G03P		1	TRUSS DESC. JT 45147	E22052738

Alpa Roof Truss, Maple

Version 8.530 S Feb 23 2022 MiTek Industries, Inc. Tue Jun 7 11:59:18 2022 Page 1

ID: 01SUN7GZ3P25I3oMs5H1nyKJTP-LjV0ZGrjqZuCDffYzqbD?qssBQkozA6pimXv7Pz8hqd

Scale: 1/2"=1'

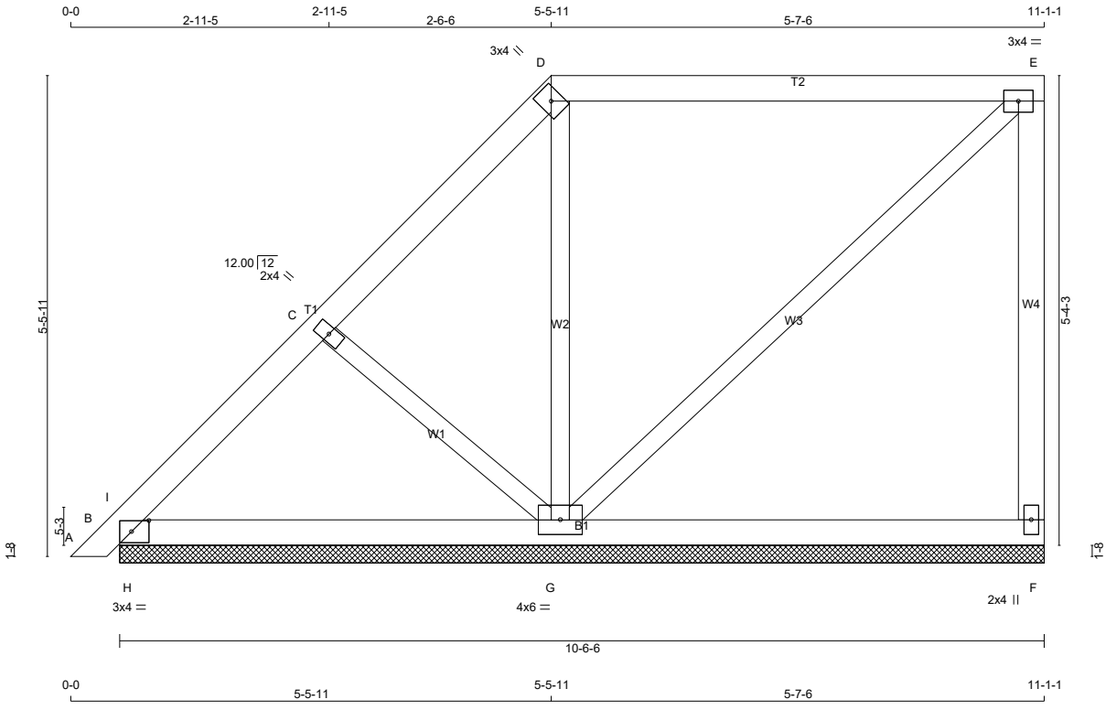

TOTAL WEIGHT = 45 lb

[M]

LUMBER

N. L. G. A. RULES

CHORDS	SIZE		LUMBER	DESCR.
A - D	2x4	DRY	No.2	SPF
D - E	2x4	DRY	No.2	SPF
F - E	2x4	DRY	No.2	SPF
B - F	2x4	DRY	No.2	SPF
ALL WEBS	2x3	DRY	No.2	SPF

DRY: SEASONED LUMBER.

PLATES (table is in inches)

JT	TYPE	PLATES	W	LEN	Y	X
B	TMB1-l	MT20	3.0	4.0	1.50	2.50
C	TMW+w	MT20	2.0	4.0		
D	TTW+h	MT20	3.0	4.0		
E	TMVW-t	MT20	3.0	4.0		
F	BMV1+p	MT20	2.0	4.0		
G	BMWWW1-t	MT20	4.0	6.0		

DIMENSIONS, SUPPORTS AND LOADINGS SPECIFIED BY FABRICATOR TO BE VERIFIED BY BUILDING DESIGNER

BEARINGS

JT	FACTORED GROSS REACTION VERT	HORZ	MAXIMUM GROSS REACTION DOWN	HORZ	FACTORED UPLIFT	INPUT BRG IN-SX	REQRD BRG IN-SX
F	253	0	253	0	0	10-6-6	1-8
B	264	0	264	0	0	10-6-6	1-8
G	534	0	534	0	0	10-6-6	1-8

UNFACTORED REACTIONS

JT	1ST LCASE COMBINED	MAX./MIN. COMPONENT REACTIONS SNOW	LIVE	PERM.LIVE	WIND	DEAD	SOIL
F	180	114 / 0	0 / 0	0 / 0	0 / 0	66 / 0	0 / 0
B	187	123 / 0	0 / 0	0 / 0	0 / 0	64 / 0	0 / 0
G	382	224 / 0	0 / 0	0 / 0	0 / 0	158 / 0	0 / 0

BEARING MATERIAL TO BE SPF NO.2 OR BETTER AT JOINT(S) F, B, G

BRACING

TOP CHORD TO BE SHEATHED OR MAX. PURLIN SPACING = 6.25 FT.
MAX. UNBRACED BOTTOM CHORD LENGTH = 10.00 FT OR RIGID CEILING DIRECTLY APPLIED.

ALL PITCH BREAKS AND PERIMETER CORNER JOINTS MUST BE LATERALLY RESTRAINED.

LOADING

TOTAL LOAD CASES: (4)

CHORDS

MEMB. FR-TO	MAX. FACTORED FORCE (LBS)	FACTORED VERT. LOAD LC1 (PLF) FROM	TO	MAX CSI (LC)	MAX. UNBRAC LENGTH
A- B	0 / 11	-78.0	-78.0	0.01 (1)	10.00
B- I	-270 / 0	-78.0	-78.0	0.04 (4)	6.25
I- C	-159 / 0	-78.0	-78.0	0.08 (1)	6.25
C- D	-17 / 0	-78.0	-78.0	0.08 (1)	6.25
D- E	0 / 6	-78.0	-78.0	0.42 (1)	10.00
F- E	-214 / 0	0.0	0.0	0.11 (1)	7.81
B- H	0 / 130	-18.5	-18.5	0.03 (4)	10.00
H- G	0 / 130	-18.5	-18.5	0.15 (4)	10.00
G- F	0 / 0	-18.5	-18.5	0.14 (4)	10.00

WEBS

MEMB. FR-TO	MAX. FACTORED FORCE (LBS)	MAX CSI (LC)
C- G	-171 / 0	0.04 (1)
G- D	-299 / 0	0.13 (1)
G- E	-8 / 0	0.01 (1)
H- I	0 / 100	0.00 (1)

DESIGN CRITERIA

SPECIFIED LOADS:

TOP CH.	LL	=	21.0	PSF
	DL	=	6.0	PSF
BOT CH.	LL	=	0.0	PSF
	DL	=	7.4	PSF
TOTAL LOAD		=	34.4	PSF

SPACING = 24.0 IN. C/C

LOADING IN FLAT SECTION BASED ON A SLOPE OF 2.00/12 MINIMUM

THIS TRUSS IS DESIGNED FOR RESIDENTIAL OR SMALL BUILDING REQUIREMENTS OF PART 9, NBCC 2015

THIS DESIGN COMPLIES WITH:
- PART 9 OF BCBC 2018 , ABC 2019
- PART 9 OF OBC 2012 (2019 AMENDMENT)
- CSA 086-14
- TPIC 2014

(55 % OF 23.0 P.S.F. G.S.L. PLUS 8.4 P.S.F. RAIN LOAD) EQUALS 21.0 P.S.F. SPECIFIED ROOF LIVE LOAD

CSI: TC=0.42/1.00 (D-E:1) , BC=0.15/1.00 (G-H:4) , WB=0.13/1.00 (D-G:1) , SSI=0.17/1.00 (D-E:1)

DOL LUMBER=1.00 NAIL=1.00 LS BEND=1.10 COMP=1.10 SHEAR=1.10 TENS= 1.10

COMPANION LIVE LOAD FACTOR = 1.00

TRUSS PLATE MANUFACTURER IS NOT RESPONSIBLE FOR QUALITY CONTROL IN THE TRUSS MANUFACTURING PLANT .

NAIL VALUES

PLATE	GRIP(DRY) (PSI) MAX	MIN	SHEAR (PLI) MAX	MIN	SECTION (PLI) MAX	MIN
MT20	650	371	1747	788	1987	1873

PLATE PLACEMENT TOL. = 0.250 inches

PLATE ROTATION TOL. = 5.0 Deg.

JSI GRIP= 0.62 (D) (INPUT = 0.90)
JSI METAL= 0.13 (D) (INPUT = 1.00)

LATERAL BRACE(S) SHOWN SHALL BE 2X4 SPF#2

JOB NAME	TRUSS NAME	QUANTITY	PLY	JOB DESC.		DRWG NO.
343177	G04P		1	TRUSS DESC.	JT 45147	E22052739

Alpa Roof Truss, Maple

Version 8.530 S Feb 23 2022 MiTek Industries, Inc. Tue Jun 7 11:59:19 2022 Page 1

ID: 01SUN7GZ3P25I3oMs5H1nyKJTP-pw2PmbsLat03qpElXX6SY1O5bq5GialyxQHTfrz8hqc

Scale = 1:35.1

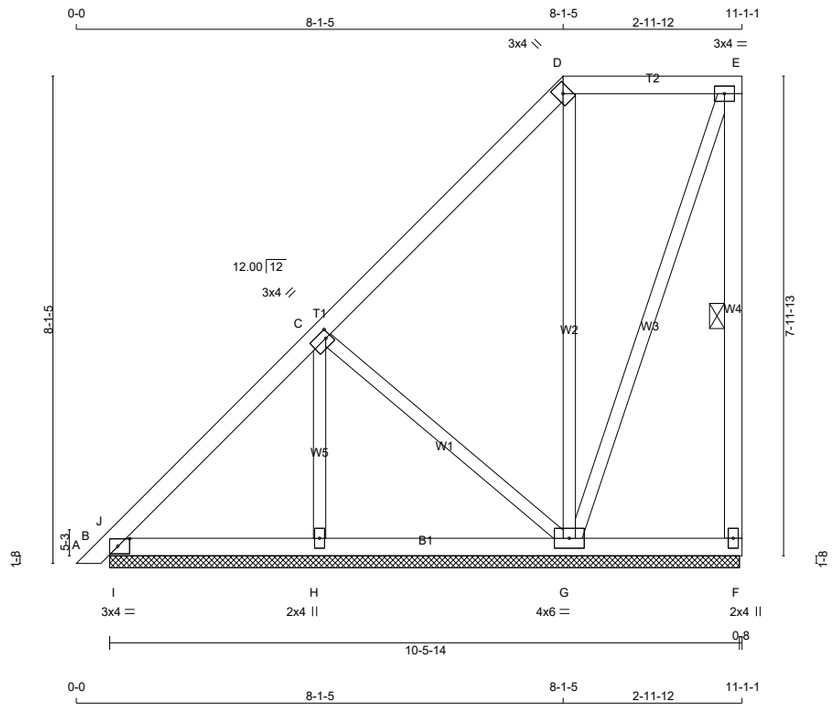

TOTAL WEIGHT = 56 lb

[M]

LUMBER

N. L. G. A. RULES

CHORDS	SIZE		LUMBER	DESCR.
A - D	2x4	DRY	No.2	SPF
D - E	2x4	DRY	No.2	SPF
F - E	2x4	DRY	No.2	SPF
B - F	2x4	DRY	No.2	SPF
ALL WEBS	2x3	DRY	No.2	SPF

DRY: SEASONED LUMBER.

PLATES (table is in inches)

JT	TYPE	PLATES	W	LEN	Y	X
B	TMB1-l	MT20	3.0	4.0	1.50	2.50
C	TMWW-t	MT20	3.0	4.0	1.50	1.00
D	TTW+h	MT20	3.0	4.0		
E	TMVW-t	MT20	3.0	4.0		
F	BMV1+p	MT20	2.0	4.0		
G	BMWWW1-t	MT20	4.0	6.0		
H	BMW1+w	MT20	2.0	4.0		

LATERAL BRACE(S) SHOWN SHALL BE 2X4 SPF#2

DIMENSIONS, SUPPORTS AND LOADINGS SPECIFIED BY FABRICATOR TO BE VERIFIED BY BUILDING DESIGNER

BEARINGS

JT	FACTORED GROSS REACTION VERT	HORZ	MAXIMUM FACTORED GROSS REACTION DOWN	HORZ	UPLIFT	INPUT BRG IN-SX	REQRD BRG IN-SX
F	122	0	122	0	0	10-5-14	1-8
B	238	0	238	0	0	10-5-14	1-8
G	397	0	397	0	0	10-5-14	1-8
H	294	0	294	0	0	10-5-14	1-8

UNFACTORED REACTIONS

JT	1ST LCASE COMBINED	MAX./MIN. COMPONENT REACTIONS SNOW	LIVE	PERM.LIVE	WIND	DEAD	SOIL
F	86	55 / 0	0 / 0	0 / 0	0 / 0	31 / 0	0 / 0
B	168	114 / 0	0 / 0	0 / 0	0 / 0	54 / 0	0 / 0
G	283	174 / 0	0 / 0	0 / 0	0 / 0	109 / 0	0 / 0
H	212	118 / 0	0 / 0	0 / 0	0 / 0	94 / 0	0 / 0

BEARING MATERIAL TO BE SPF NO.2 OR BETTER AT JOINT(S) F, B, G, H

BRACING

TOP CHORD TO BE SHEATHED OR MAX. PURLIN SPACING = 6.25 FT.
MAX. UNBRACED BOTTOM CHORD LENGTH = 10.00 FT OR RIGID CEILING DIRECTLY APPLIED.

ALL PITCH BREAKS AND PERIMETER CORNER JOINTS MUST BE LATERALLY RESTRAINED.

1 LATERAL BRACE(S) AT 1/ 2 LENGTH OF E-F.

END VERTICAL(S) MUST BE SHEATHED OR HAVE BRACES AS INDICATED IN THE MAX. UNBRACED LENGTH COLUMN OF THE TABLE BELOW

LOADING

TOTAL LOAD CASES: (4)

CHORDS

MEMB. FR-TO	MAX. FACTORED FORCE (LBS)	FACTORED VERT. LOAD LC1 (PLF) FROM	TO	MAX CSI (LC)	MAX. UNBRAC LENGTH
A- B	0 / 11	-78.0	-78.0	0.01 (1)	10.00
B- J	-91 / 0	-78.0	-78.0	0.02 (1)	6.25
J- C	-88 / 0	-78.0	-78.0	0.18 (1)	6.25
C- D	-21 / 0	-78.0	-78.0	0.18 (1)	6.25
D- E	0 / 5	-78.0	-78.0	0.12 (1)	10.00
F- E	-103 / 0	0.0	0.0	0.03 (1)	6.25
B- I	0 / 81	-18.5	-18.5	0.05 (1)	10.00
I- H	0 / 81	-18.5	-18.5	0.07 (4)	10.00
H- G	0 / 81	-18.5	-18.5	0.07 (4)	10.00
G- F	0 / 0	-18.5	-18.5	0.05 (4)	10.00

WEBS

MEMB. FR-TO	MAX. FACTORED FORCE (LBS)	MAX CSI (LC)
G- D	-243 / 0	0.29 (1)
G- E	-15 / 0	0.02 (1)
H- C	-203 / 0	0.05 (1)
C- G	-109 / 0	0.05 (1)
I- J	-125 / 6	0.00 (1)

DESIGN CRITERIA

SPECIFIED LOADS:

TOP CH.	LL	=	21.0	PSF
	DL	=	6.0	PSF
BOT CH.	LL	=	0.0	PSF
	DL	=	7.4	PSF
TOTAL LOAD		=	34.4	PSF

SPACING = 24.0 IN. C/C

LOADING IN FLAT SECTION BASED ON A SLOPE OF 2.00/12 MINIMUM

THIS TRUSS IS DESIGNED FOR RESIDENTIAL OR SMALL BUILDING REQUIREMENTS OF PART 9, NBCC 2015

THIS DESIGN COMPLIES WITH:
- PART 9 OF BCBC 2018 , ABC 2019
- PART 9 OF OBC 2012 (2019 AMENDMENT)
- CSA 086-14
- TPIC 2014

(55 % OF 23.0 P.S.F. G.S.L. PLUS 8.4 P.S.F. RAIN LOAD) EQUALS 21.0 P.S.F. SPECIFIED ROOF LIVE LOAD

CSI: TC=0.18/1.00 (C-J:1) , BC=0.07/1.00 (H-I:4) , WB=0.29/1.00 (D-G:1) , SSI=0.11/1.00 (B-I:1)

DOL LUMBER=1.00 NAIL=1.00 LS BEND=1.10 COMP=1.10 SHEAR=1.10 TENS= 1.10

COMPANION LIVE LOAD FACTOR = 1.00

TRUSS PLATE MANUFACTURER IS NOT RESPONSIBLE FOR QUALITY CONTROL IN THE TRUSS MANUFACTURING PLANT .

NAIL VALUES

PLATE	GRIP(DRY) (PSI) MAX	MIN	SHEAR (PLI) MAX	MIN	SECTION (PLI) MAX	MIN
MT20	650	371	1747	788	1987	1873

PLATE PLACEMENT TOL. = 0.250 inches

PLATE ROTATION TOL. = 5.0 Deg.

JSI GRIP= 0.33 (D) (INPUT = 0.90)
JSI METAL= 0.07 (D) (INPUT = 1.00)

JOB NAME	TRUSS NAME	QUANTITY	PLY	JOB DESC.		DRWG NO.
343177	G05P		1	TRUSS DESC.	JT 45147	E22052740

Alpa Roof Truss, Maple

Version 8.530 S Feb 23 2022 MiTek Industries, Inc. Tue Jun 7 11:59:20 2022 Page 1

ID: 01SUN7GZ3P25I3oMs5H1nyKJTP-H6cn xtzLB8wSzpx5Fdh5FxDqEQ7R3q6A400BIz8hqb

Scale = 1:47.4

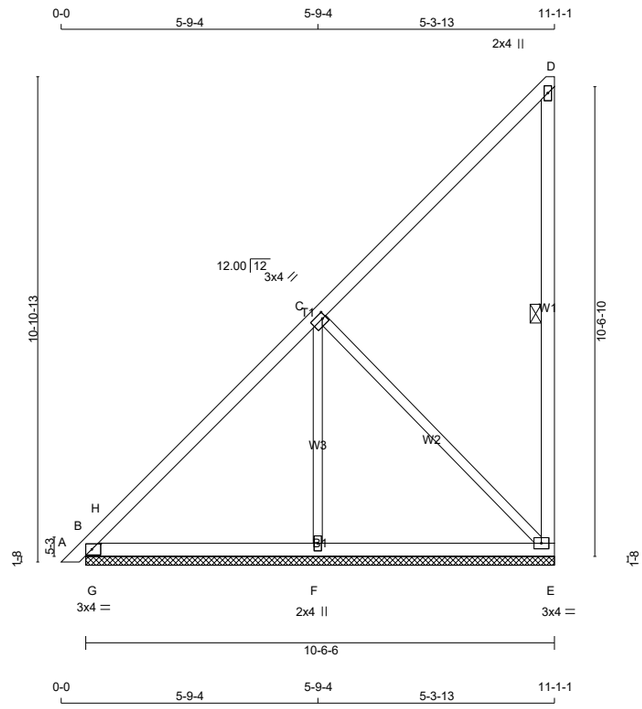

TOTAL WEIGHT = 51 lb

[M]

LUMBER

N. L. G. A. RULES

CHORDS	SIZE		LUMBER	DESCR.
A - D	2x4	DRY	No.2	SPF
E - D	2x4	DRY	No.2	SPF
B - E	2x4	DRY	No.2	SPF
ALL WEBS	2x3	DRY	No.2	SPF

DRY: SEASONED LUMBER.

PLATES (table is in inches)

JT	TYPE	PLATES	W	LEN	Y	X
B	TMB1-l	MT20	3.0	4.0	1.50	2.50
C	TMWW-t	MT20	3.0	4.0	1.50	1.00
D	TMV+p	MT20	2.0	4.0		
E	BMVW1-t	MT20	3.0	4.0		
F	BMW1+w	MT20	2.0	4.0		

DIMENSIONS, SUPPORTS AND LOADINGS SPECIFIED BY FABRICATOR TO BE VERIFIED BY BUILDING DESIGNER

BEARINGS

JT	FACTORED GROSS REACTION VERT	HORZ	MAXIMUM FACTORED GROSS REACTION DOWN	HORZ	UPLIFT	INPUT BRG IN-SX	REQRD BRG IN-SX
E	318	0	318	0	0	10-6-6	1-8
B	349	0	349	0	0	10-6-6	1-8
F	385	0	385	0	0	10-6-6	1-8

UNFACTORED REACTIONS

JT	1ST LCASE COMBINED	MAX./MIN. COMPONENT REACTIONS SNOW	LIVE	PERM.LIVE	WIND	DEAD	SOIL
E	224	148 / 0	0 / 0	0 / 0	0 / 0	76 / 0	0 / 0
B	246	166 / 0	0 / 0	0 / 0	0 / 0	80 / 0	0 / 0
F	278	147 / 0	0 / 0	0 / 0	0 / 0	131 / 0	0 / 0

BEARING MATERIAL TO BE SPF NO.2 OR BETTER AT JOINT(S) E, B, F

BRACING

TOP CHORD TO BE SHEATHED OR MAX. PURLIN SPACING = 6.25 FT.
MAX. UNBRACED BOTTOM CHORD LENGTH = 10.00 FT OR RIGID CEILING DIRECTLY APPLIED.

ALL PITCH BREAKS AND PERIMETER CORNER JOINTS MUST BE LATERALLY RESTRAINED.

1 LATERAL BRACE(S) AT 1/ 2 LENGTH OF D-E.

END VERTICAL(S) MUST BE SHEATHED OR HAVE BRACES AS INDICATED IN THE MAX. UNBRACED LENGTH COLUMN OF THE TABLE BELOW

LOADING

TOTAL LOAD CASES: (4)

CHORDS

MEMB. FR-TO	MAX. FACTORED FORCE (LBS)	FACTORED VERT. LOAD LC1 (PLF) FROM	TO	MAX CSI (LC)	MAX. UNBRAC LENGTH
A- B	0 / 11	-78.0	-78.0	0.01 (1)	10.00
B- H	-64 / 0	-78.0	-78.0	0.07 (1)	6.25
H- C	-147 / 0	-78.0	-78.0	0.34 (1)	6.25
C- D	-33 / 0	-78.0	-78.0	0.34 (1)	6.25
E- D	-160 / 0	0.0	0.0	0.10 (1)	6.25
B- G	0 / 124	-18.5	-18.5	0.12 (1)	10.00
G- F	0 / 124	-18.5	-18.5	0.16 (4)	10.00
F- E	0 / 124	-18.5	-18.5	0.16 (4)	10.00

WEBS

MEMB. FR-TO	MAX. FACTORED FORCE (LBS)	MAX CSI (LC)
F- C	-242 / 0	0.12 (1)
C- E	-175 / 0	0.19 (1)
G- H	-355 / 0	0.00 (1)

DESIGN CRITERIA

SPECIFIED LOADS:

TOP CH.	LL	=	21.0	PSF
	DL	=	6.0	PSF
BOT CH.	LL	=	0.0	PSF
	DL	=	7.4	PSF
TOTAL LOAD		=	34.4	PSF

SPACING = 24.0 IN. C/C

THIS TRUSS IS DESIGNED FOR RESIDENTIAL OR SMALL BUILDING REQUIREMENTS OF PART 9, NBCC 2015

THIS DESIGN COMPLIES WITH:
- PART 9 OF BCBC 2018 , ABC 2019
- PART 9 OF OBC 2012 (2019 AMENDMENT)
- CSA 086-14
- TPIC 2014

(55 % OF 23.0 P.S.F. G.S.L. PLUS 8.4 P.S.F. RAIN LOAD) EQUALS 21.0 P.S.F. SPECIFIED ROOF LIVE LOAD

CSI: TC=0.34/1.00 (C-H:1) , BC=0.16/1.00 (E-F:4) , WB=0.19/1.00 (C-E:1) , SSI=0.29/1.00 (B-G:1)

DOL LUMBER=1.00 NAIL=1.00 LS BEND=1.10 COMP=1.10 SHEAR=1.10 TENS= 1.10

COMPANION LIVE LOAD FACTOR = 1.00

TRUSS PLATE MANUFACTURER IS NOT RESPONSIBLE FOR QUALITY CONTROL IN THE TRUSS MANUFACTURING PLANT .

NAIL VALUES

PLATE	GRIP(DRY) (PSI) MAX	MIN	SHEAR (PLI) MAX	MIN	SECTION (PLI) MAX	MIN
MT20	650	371	1747	788	1987	1873

PLATE PLACEMENT TOL. = 0.250 inches

PLATE ROTATION TOL. = 5.0 Deg.

JSI GRIP= 0.33 (B) (INPUT = 0.90)
JSI METAL= 0.08 (D) (INPUT = 1.00)

LATERAL BRACE(S) SHOWN SHALL BE 2X4 SPF#2

LICENSED PROFESSIONAL ENGINEER
Y. WIDYA
100225448
06/07/2022
PROVINCE OF ONTARIO

JOB NAME	TRUSS NAME	QUANTITY	PLY	JOB DESC.	DRWG NO.
343177	G06P		1	TRUSS DESC. JT 45147	E22052741

Alpa Roof Truss, Maple

Version 8.530 S Feb 23 2022 MiTek Industries, Inc. Tue Jun 7 11:59:21 2022 Page 1

ID: 01SUN7GZ3P25I3oMs5H1nyKJTP-IIA9BHub6UGn47O7fy8wdSUOaemMAWwFOjmZjkz8hqa

Scale = 1:47.5

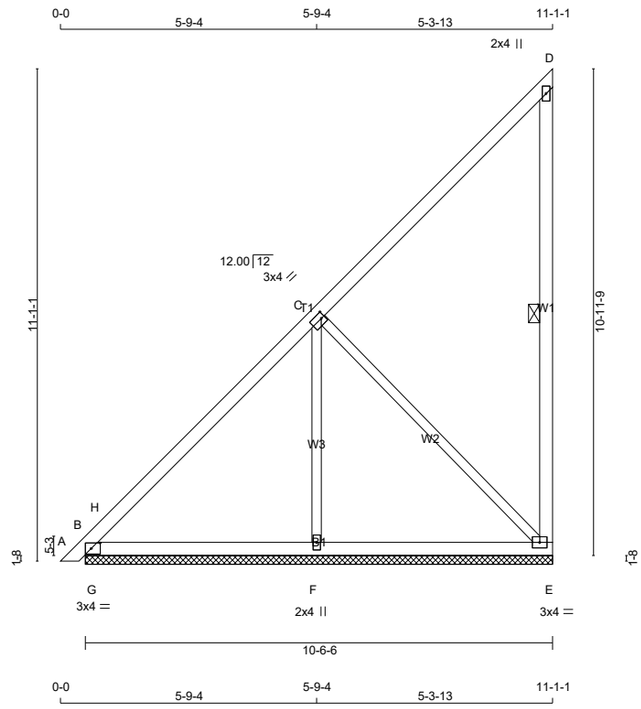

TOTAL WEIGHT = 51 lb

[M]

LUMBER

N. L. G. A. RULES

CHORDS	SIZE		LUMBER	DESCR.
A - D	2x4	DRY	No.2	SPF
E - D	2x4	DRY	No.2	SPF
B - E	2x4	DRY	No.2	SPF
ALL WEBS	2x3	DRY	No.2	SPF

DRY: SEASONED LUMBER.

PLATES (table is in inches)

JT	TYPE	PLATES	W	LEN	Y	X
B	TMB1-l	MT20	3.0	4.0	1.50	2.50
C	TMWW-t	MT20	3.0	4.0	1.50	1.00
D	TMV+p	MT20	2.0	4.0		
E	BMVW1-t	MT20	3.0	4.0		
F	BMW1+w	MT20	2.0	4.0		

DIMENSIONS, SUPPORTS AND LOADINGS SPECIFIED BY FABRICATOR TO BE VERIFIED BY BUILDING DESIGNER

BEARINGS

JT	FACTORED GROSS REACTION VERT	HORZ	MAXIMUM FACTORED GROSS REACTION DOWN	HORZ	UPLIFT	INPUT BRG IN-SX	REQRD BRG IN-SX
E	318	0	318	0	0	10-6-6	1-8
B	349	0	349	0	0	10-6-6	1-8
F	385	0	385	0	0	10-6-6	1-8

UNFACTORED REACTIONS

JT	1ST LCASE COMBINED	MAX./MIN. COMPONENT REACTIONS SNOW	LIVE	PERM.LIVE	WIND	DEAD	SOIL
E	224	148 / 0	0 / 0	0 / 0	0 / 0	76 / 0	0 / 0
B	246	166 / 0	0 / 0	0 / 0	0 / 0	80 / 0	0 / 0
F	278	147 / 0	0 / 0	0 / 0	0 / 0	131 / 0	0 / 0

BEARING MATERIAL TO BE SPF NO.2 OR BETTER AT JOINT(S) E, B, F

BRACING

TOP CHORD TO BE SHEATHED OR MAX. PURLIN SPACING = 6.25 FT.
MAX. UNBRACED BOTTOM CHORD LENGTH = 10.00 FT OR RIGID CEILING DIRECTLY APPLIED.

ALL PITCH BREAKS AND PERIMETER CORNER JOINTS MUST BE LATERALLY RESTRAINED.

1 LATERAL BRACE(S) AT 1/ 2 LENGTH OF D-E.

END VERTICAL(S) MUST BE SHEATHED OR HAVE BRACES AS INDICATED IN THE MAX. UNBRACED LENGTH COLUMN OF THE TABLE BELOW

LOADING

TOTAL LOAD CASES: (4)

CHORDS

MEMB. FR-TO	MAX. FORCE (LBS)	FACTORED VERT. LOAD LC1 (PLF) FROM	TO	MAX CSI (LC)	MAX. UNBRAC LENGTH
A- B	0 / 11	-78.0	-78.0	0.01 (1)	10.00
B- H	-64 / 0	-78.0	-78.0	0.07 (1)	6.25
H- C	-147 / 0	-78.0	-78.0	0.34 (1)	6.25
C- D	-33 / 0	-78.0	-78.0	0.34 (1)	6.25
E- D	-160 / 0	0.0	0.0	0.10 (1)	6.25
B- G	0 / 124	-18.5	-18.5	0.12 (1)	10.00
G- F	0 / 124	-18.5	-18.5	0.16 (4)	10.00
F- E	0 / 124	-18.5	-18.5	0.16 (4)	10.00

WEBS

MEMB. FR-TO	MAX. FORCE (LBS)	MAX CSI (LC)
F- C	-242 / 0	0.12 (1)
C- E	-175 / 0	0.19 (1)
G- H	-355 / 0	0.00 (1)

DESIGN CRITERIA

SPECIFIED LOADS:

TOP CH.	LL	=	21.0	PSF
	DL	=	6.0	PSF
BOT CH.	LL	=	0.0	PSF
	DL	=	7.4	PSF
TOTAL LOAD		=	34.4	PSF

SPACING = 24.0 IN. C/C

THIS TRUSS IS DESIGNED FOR RESIDENTIAL OR SMALL BUILDING REQUIREMENTS OF PART 9, NBCC 2015

THIS DESIGN COMPLIES WITH:
- PART 9 OF BCBC 2018 , ABC 2019
- PART 9 OF OBC 2012 (2019 AMENDMENT)
- CSA 086-14
- TPIC 2014

(55 % OF 23.0 P.S.F. G.S.L. PLUS 8.4 P.S.F. RAIN LOAD) EQUALS 21.0 P.S.F. SPECIFIED ROOF LIVE LOAD

CSI: TC=0.34/1.00 (C-H:1) , BC=0.16/1.00 (F-G:4) , WB=0.19/1.00 (C-E:1) , SSI=0.29/1.00 (B-G:1)

DOL LUMBER=1.00 NAIL=1.00 LS BEND=1.10 COMP=1.10 SHEAR=1.10 TENS= 1.10

COMPANION LIVE LOAD FACTOR = 1.00

TRUSS PLATE MANUFACTURER IS NOT RESPONSIBLE FOR QUALITY CONTROL IN THE TRUSS MANUFACTURING PLANT .

NAIL VALUES

PLATE	GRIP(DRY) (PSI) MAX	MIN	SHEAR (PLI) MAX	MIN	SECTION (PLI) MAX	MIN
MT20	650	371	1747	788	1987	1873

PLATE PLACEMENT TOL. = 0.250 inches

PLATE ROTATION TOL. = 5.0 Deg.

JSI GRIP= 0.33 (B) (INPUT = 0.90)
JSI METAL= 0.08 (D) (INPUT = 1.00)

LATERAL BRACE(S) SHOWN SHALL BE 2X4 SPF#2

LICENSED PROFESSIONAL ENGINEER
Y. WIDYA
100225448
06/07/2022
PROVINCE OF ONTARIO

JOB NAME	TRUSS NAME	QUANTITY	PLY	JOB DESC.	DRWG NO.
343177	H10		1	TRUSS DESC. JT 45147	E22052742

Alpa Roof Truss, Maple

Version 8.530 S Feb 23 2022 MiTek Industries, Inc. Tue Jun 7 11:59:22 2022 Page 1

ID: 01SUN7GZ3P25I3oMs5H1nyKJTP-EVkXPdvEtoOehGzKCgf9Ag0Sm203vsYPdNV7GAz8hcZ

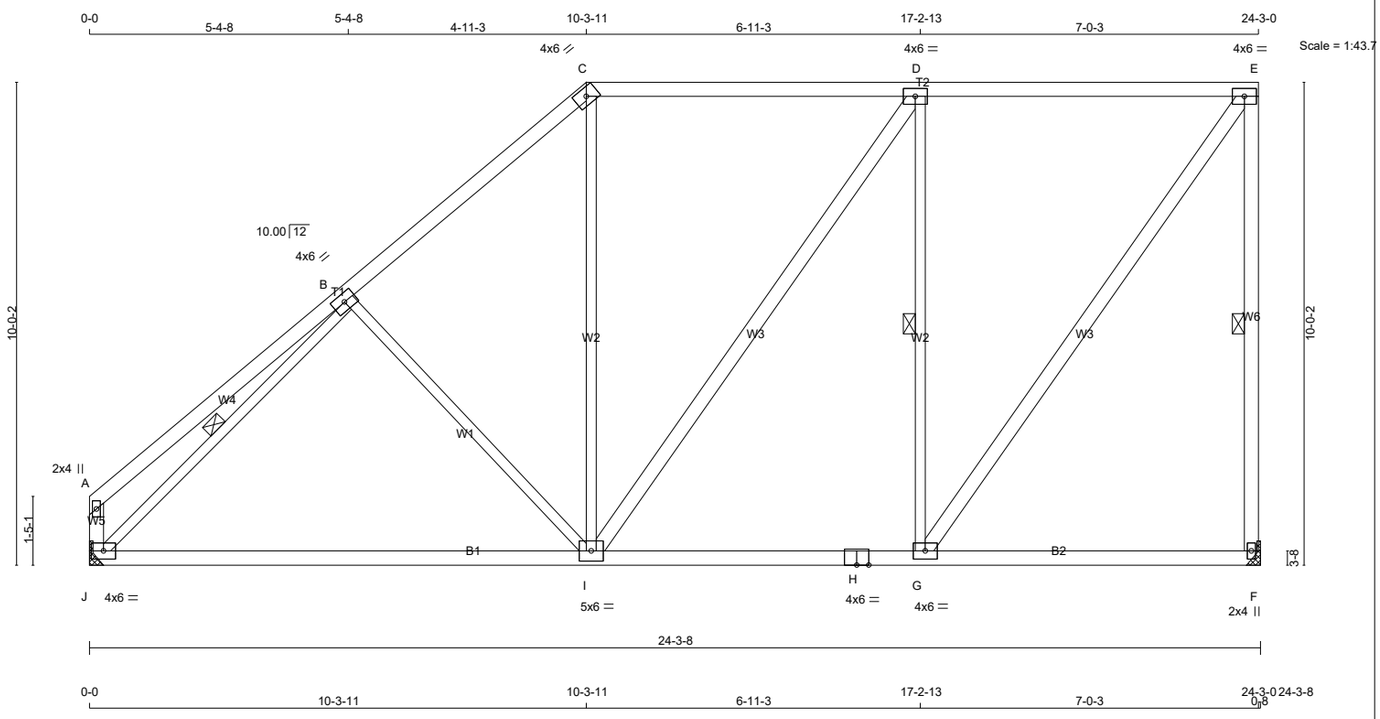

TOTAL WEIGHT = 124 lb

[M]

LUMBER

N. L. G. A. RULES

CHORDS	SIZE		LUMBER	DESCR.
A - C	2x4	DRY	No.2	SPF
C - E	2x4	DRY	No.2	SPF
F - E	2x4	DRY	No.2	SPF
J - A	2x4	DRY	No.2	SPF
J - H	2x4	DRY	No.2	SPF
H - F	2x4	DRY	No.2	SPF
ALL WEBS	2x3	DRY	No.2	SPF
EXCEPT				
I - D	2x4	DRY	No.2	SPF
G - E	2x4	DRY	No.2	SPF

DRY: SEASONED LUMBER.

PLATES (table is in inches)

JT	TYPE	PLATES	W	LEN	Y	X
A	TMV+p	MT20	2.0	4.0		
B	TMWW-t	MT20	4.0	6.0		
C	TTW-h	MT20	4.0	6.0		
D	TMWW-t	MT20	4.0	6.0		
E	TMVW-t	MT20	4.0	6.0		
F	BMV1+p	MT20	2.0	4.0		
G	BMWW-t	MT20	4.0	6.0		
H	BS-t	MT20	4.0	6.0		
I	BMWWW-t	MT20	5.0	6.0		
J	BMVW1-t	MT20	4.0	6.0		

LATERAL BRACE(S) SHOWN SHALL BE 2X4 SPF#2

DIMENSIONS, SUPPORTS AND LOADINGS SPECIFIED BY FABRICATOR TO BE VERIFIED BY BUILDING DESIGNER

BEARINGS

JT	FACTORED GROSS REACTION VERT	HORZ	MAXIMUM FACTORED GROSS REACTION DOWN	HORZ	UPLIFT	INPUT BRG	REQRD BRG
F	1319	0	1319	0	0	MECHANICAL	
J	1230	0	1230	0	0	MECHANICAL	

A SUITABLE HANGER/MECHANICAL CONNECTION IS REQUIRED AT JOINT F, J. MINIMUM BEARING LENGTH AT JOINT F = 1-8, JOINT J = 1-8.

UNFACTORED REACTIONS

JT	1ST LCASE COMBINED	MAX./MIN. COMPONENT REACTIONS SNOW	LIVE	PERM.LIVE	WIND	DEAD	SOIL
F	953	509 / 0	0 / 0	0 / 0	0 / 0	444 / 0	0 / 0
J	882	509 / 0	0 / 0	0 / 0	0 / 0	373 / 0	0 / 0

BRACING

FOR SECTION C-E, MAX. PURLIN SPACING = 2.00 FT.
FOR OTHER SECTIONS, TOP CHORD TO BE SHEATHED OR MAX. PURLIN SPACING = 5.60 FT.
MAX. UNBRACED BOTTOM CHORD LENGTH = 10.00 FT OR RIGID CEILING DIRECTLY APPLIED.

ALL PITCH BREAKS AND PERIMETER CORNER JOINTS MUST BE LATERALLY RESTRAINED.

1 LATERAL BRACE(S) AT 1/ 2 LENGTH OF E-F, D-G, B-J.

END VERTICAL(S) MUST BE SHEATHED OR HAVE BRACES AS INDICATED IN THE MAX. UNBRACED LENGTH COLUMN OF THE TABLE BELOW

LOADING

TOTAL LOAD CASES: (4)

CHORDS

MEMB. FR-TO	MAX. FORCE (LBS)	FACTORED VERT. LOAD (PLF) FROM	TO	LC1 CSI (LC)	MAX UNBRAC LENGTH
A- B	0 / 30	-78.0	-78.0	0.34 (1)	10.00
B- C	-1067 / 0	-78.0	-78.0	0.39 (1)	5.60
C- D	-796 / 0	-93.0	-93.0	0.83 (1)	2.00
D- E	-733 / 0	-93.0	-93.0	0.82 (1)	2.00
F- E	-1263 / 0	0.0	0.0	0.61 (1)	5.73
J- A	-157 / 0	0.0	0.0	0.02 (1)	7.81
J- I	0 / 954	-18.5	-18.5	0.51 (4)	10.00
I- H	0 / 733	-18.5	-18.5	0.50 (4)	10.00
H- G	0 / 733	-18.5	-18.5	0.50 (4)	10.00
G- F	0 / 0	-18.5	-18.5	0.20 (4)	10.00

WEBS

MEMB. FR-TO	MAX. FORCE (LBS)	MAX CSI (LC)
I- C	0 / 272	0.06 (4)
I- D	0 / 110	0.02 (1)
G- D	-895 / 0	0.61 (1)
G- E	0 / 1253	0.20 (1)
J- B	-1377 / 0	0.52 (1)
B- I	-233 / 0	0.26 (1)

DESIGN CRITERIA

SPECIFIED LOADS:

TOP CH.	LL	=	21.0	PSF
	DL	=	6.0	PSF
BOT CH.	LL	=	0.0	PSF
	DL	=	7.4	PSF
TOTAL LOAD		=	34.4	PSF

SPACING = 24.0 IN. C/C

LOADING IN FLAT SECTION BASED ON PIGGYBACK TRUSS WITH SLOPES OF 6.00/12 AND -6.00/12 AND RESPECTIVE HEEL HEIGHTS OF 0-0 AND 0-0 AND AN ADDITIONAL DEAD LOAD OF 6.0 P.S.F.

THIS TRUSS IS DESIGNED FOR RESIDENTIAL OR SMALL BUILDING REQUIREMENTS OF PART 9, NBCC 2015

THIS DESIGN COMPLIES WITH:
- PART 9 OF BCBC 2018 , ABC 2019
- PART 9 OF OBC 2012 (2019 AMENDMENT)
- CSA 086-14
- TPIC 2014

(55 % OF 23.0 P.S.F. G.S.L. PLUS 8.4 P.S.F. RAIN LOAD) EQUALS 21.0 P.S.F. SPECIFIED ROOF LIVE LOAD

ALLOWABLE DEFL.(LL)= L/360 (0.81")
CALCULATED VERT. DEFL.(LL) = L/ 999 (0.03")
ALLOWABLE DEFL.(TL)= L/360 (0.81")
CALCULATED VERT. DEFL.(TL) = L/ 839 (0.35")

CSI: TC=0.83/1.00 (C-D:1) , BC=0.51/1.00 (I-J:4) , WB=0.61/1.00 (D-G:1) , SSI=0.32/1.00 (D-E:1)

DOL LUMBER=1.00 NAIL=1.00 LS BEND=1.10 COMP=1.10 SHEAR=1.10 TENS= 1.10

COMPANION LIVE LOAD FACTOR = 1.00

AUTOSOLVE RIGHT HEEL ONLY

TRUSS PLATE MANUFACTURER IS NOT RESPONSIBLE FOR QUALITY CONTROL IN THE TRUSS MANUFACTURING PLANT .

NAIL VALUES

PLATE	GRIP(DRY) (PSI) MAX	MIN	SHEAR (PLI) MAX	MIN	SECTION (PLI) MAX	MIN
MT20	650	371	1747	788	1987	1873

PLATE PLACEMENT TOL. = 0.250 inches

PLATE ROTATION TOL. = 5.0 Deg.

JSI GRIP= 0.81 (G) (INPUT = 0.90)
JSI METAL= 0.31 (B) (INPUT = 1.00)

JOB NAME	TRUSS NAME	QUANTITY	PLY	JOB DESC.	DRWG NO.
343177	H10G		1	TRUSS DESC. JT 45147	E22052743

Alpa Roof Truss, Maple

Version 8.530 S Feb 23 2022 MiTek Industries, Inc. Tue Jun 7 11:59:24 2022 Page 1

ID: 01SUN7GZ3P25I3oMs5H1nyKJTP-AtsIqJwUPPeMxa6iK5idF56 XrpCNsAh5h EK3z8hqX

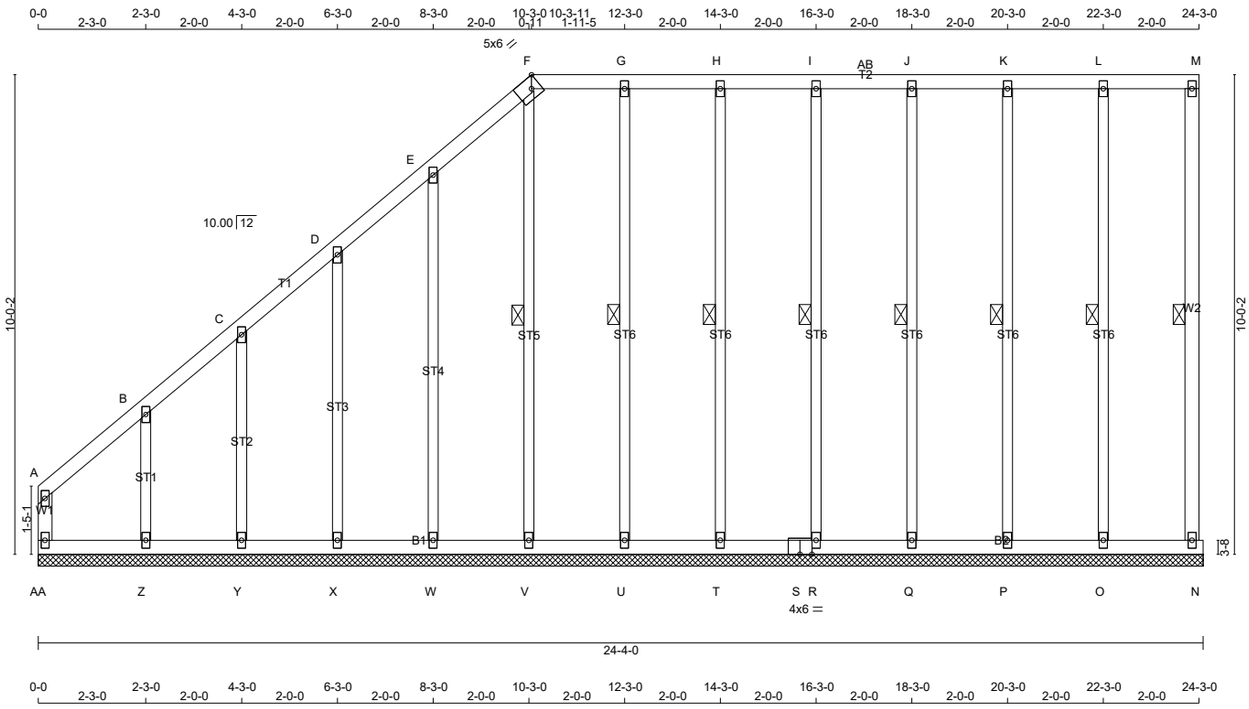

LUMBER

N. L. G. A. RULES

CHORDS	SIZE		LUMBER	DESCR.
A - F	2x4	DRY	No.2	SPF
F - M	2x4	DRY	No.2	SPF
N - M	2x4	DRY	No.2	SPF
AA- A	2x4	DRY	No.2	SPF
AA- S	2x4	DRY	No.2	SPF
S - N	2x4	DRY	No.2	SPF
ALL WEBS	2x3	DRY	No.2	SPF
ALL GABLE WEBS	2x3	DRY	No.2	SPF

DRY: SEASONED LUMBER.

GABLE STUDS SPACED AT 2-0-0 OC.

PLATES (table is in inches)

JT	TYPE	PLATES	W	LEN	Y	X
A	TMV+p	MT20	2.0	4.0		
B, C, D, E, G, H, I, J, K, L						
B	TMW+w	MT20	2.0	4.0		
F	TTW-h	MT20	5.0	6.0	Edge 2.25	
M	TMV+p	MT20	2.0	4.0		
N	BMV1+p	MT20	2.0	4.0		
O, P, Q, R, T, U, V, W, X, Y, Z						
O	BMW1+w	MT20	2.0	4.0		
S	BS-t	MT20	4.0	6.0		
AA	BMV1+p	MT20	2.0	4.0		

Edge - INDICATES REFERENCE CORNER OF PLATE TOUCHES EDGE OF CHORD.

LATERAL BRACE(S) SHOWN SHALL BE 2X4 SPF#2

DIMENSIONS, SUPPORTS AND LOADINGS SPECIFIED BY FABRICATOR TO BE VERIFIED BY BUILDING DESIGNER

BEARINGS

THIS TRUSS DESIGNED FOR CONTINUOUS BEARINGS.

THIS TRUSS REQUIRES RIGID SHEATHING ON EXPOSED FACE.

BEARING MATERIAL TO BE SPF NO.2 OR BETTER AT JOINT(S)

BRACING

FOR SECTION F-M, MAX. PURLIN SPACING = 2.00 FT.
FOR OTHER SECTIONS, TOP CHORD TO BE SHEATHED OR MAX. PURLIN SPACING = 6.25 FT.
MAX. UNBRACED BOTTOM CHORD LENGTH = 10.00 FT OR RIGID CEILING DIRECTLY APPLIED.

ALL PITCH BREAKS AND PERIMETER CORNER JOINTS MUST BE LATERALLY RESTRAINED.

1 LATERAL BRACE(S) AT 1/ 2 LENGTH OF M-N, L-O, K-P, J-Q, I-R, H-T, G-U, F-V.

END VERTICAL(S) MUST BE SHEATHED OR HAVE BRACES AS INDICATED IN THE MAX. UNBRACED LENGTH COLUMN OF THE TABLE BELOW

LOADING

TOTAL LOAD CASES: (4)

CHORDS

MEMB. FR-TO	MAX. FORCE (LBS)	FACTORED VERT. LOAD (PLF) FROM	TO	LC1	MAX CSI (LC)	MAX. UNBRAC LENGTH
A- B	-12 / 0	-78.0	-78.0	0.04 (1)		6.25
B- C	-13 / 0	-78.0	-78.0	0.04 (1)		6.25
C- D	-6 / 0	-78.0	-78.0	0.04 (1)		10.00
D- E	-2 / 0	-78.0	-78.0	0.04 (1)		10.00
E- F	0 / 0	-78.0	-78.0	0.04 (1)		10.00
F- G	-2 / 0	-93.0	-93.0	0.04 (1)		2.00
G- H	-2 / 0	-93.0	-93.0	0.04 (1)		2.00
H- I	-2 / 0	-93.0	-93.0	0.04 (1)		2.00
I-AB	-2 / 0	-93.0	-93.0	0.04 (1)		2.00
AB- J	-2 / 0	-93.0	-93.0	0.04 (1)		2.00
J- K	-2 / 0	-93.0	-93.0	0.04 (1)		2.00
K- L	-2 / 0	-93.0	-93.0	0.04 (1)		2.00
L- M	-2 / 0	-93.0	-93.0	0.04 (1)		2.00
N- M	-83 / 0	0.0	0.0	0.02 (1)		6.25
AA- A	-88 / 0	0.0	0.0	0.02 (1)		7.81
AA- Z	0 / 13	-18.5	-18.5	0.02 (4)		10.00
Z- Y	0 / 8	-18.5	-18.5	0.02 (4)		10.00
Y- X	0 / 5	-18.5	-18.5	0.02 (4)		10.00
X- W	0 / 3	-18.5	-18.5	0.01 (4)		10.00
W- V	0 / 0	-18.5	-18.5	0.01 (4)		10.00
V- U	0 / 2	-18.5	-18.5	0.01 (4)		10.00
U- T	0 / 2	-18.5	-18.5	0.01 (4)		10.00
T- S	0 / 2	-18.5	-18.5	0.01 (4)		10.00
S- R	0 / 2	-18.5	-18.5	0.01 (4)		10.00
R- Q	0 / 2	-18.5	-18.5	0.01 (4)		10.00
Q- P	0 / 2	-18.5	-18.5	0.01 (4)		10.00
P- O	0 / 2	-18.5	-18.5	0.02 (4)		10.00
O- N	0 / 2	-18.5	-18.5	0.02 (4)		10.00

WEBS

MEMB. FR-TO	MAX. FORCE (LBS)	MAX CSI (LC)
O- L	-196 / 0	0.13 (1)
P- K	-186 / 0	0.13 (1)
Q- J	-186 / 0	0.13 (1)
R- I	-186 / 0	0.13 (1)
T- H	-187 / 0	0.13 (1)
U- G	-183 / 0	0.12 (1)
V- F	-173 / 0	0.12 (1)
W- E	-161 / 0	0.22 (1)
X- D	-153 / 0	0.11 (1)
Y- C	-149 / 0	0.05 (1)
Z- B	-169 / 0	0.03 (1)

DESIGN CRITERIA

SPECIFIED LOADS:

TOP CH.	LL	=	21.0	PSF
	DL	=	6.0	PSF
BOT CH.	LL	=	0.0	PSF
	DL	=	7.4	PSF
TOTAL LOAD		=	34.4	PSF

SPACING = 24.0 IN. C/C

LOADING IN FLAT SECTION BASED ON PIGGYBACK TRUSS WITH SLOPES OF 6.00/12 AND -6.00/12 AND RESPECTIVE HEEL HEIGHTS OF 0-0 AND 0-0 AND AN ADDITIONAL DEAD LOAD OF 6.0 P.S.F.

THIS TRUSS IS DESIGNED FOR RESIDENTIAL OR SMALL BUILDING REQUIREMENTS OF PART 9, NBCC 2015

THIS DESIGN COMPLIES WITH:
- PART 9 OF BCBC 2018 , ABC 2019
- PART 9 OF OBC 2012 (2019 AMENDMENT)
- CSA 086-14
- TPIC 2014

(55 % OF 23.0 P.S.F. G.S.L. PLUS 8.4 P.S.F. RAIN LOAD) EQUALS 21.0 P.S.F. SPECIFIED ROOF LIVE LOAD

CSI: TC=0.04/1.00 (A-B:1) , BC=0.02/1.00 (Z-AA:4) , WB=0.22/1.00 (E-W:1) , SSI=0.08/1.00 (L-M:1)

DOL LUMBER=1.00 NAIL=1.00 LS BEND=1.10 COMP=1.10 SHEAR=1.10 TENS= 1.10

COMPANION LIVE LOAD FACTOR = 1.00

AUTOSOLVE RIGHT HEEL ONLY

TRUSS PLATE MANUFACTURER IS NOT RESPONSIBLE FOR QUALITY CONTROL IN THE TRUSS MANUFACTURING PLANT .

NAIL VALUES

PLATE	GRIP(DRY) (PSI) MAX	MIN	SHEAR (PLI) MAX	MIN	SECTION (PLI) MAX	MIN
MT20	650	371	1747	788	1987	1873

PLATE PLACEMENT TOL. = 0.250 inches

PLATE ROTATION TOL. = 5.0 Deg.

JSI GRIP= 0.51 (F) (INPUT = 0.90)
JSI METAL= 0.09 (B) (INPUT = 1.00)

JOB NAME	TRUSS NAME	QUANTITY	PLY	JOB DESC.	DRWG NO.
343177	H11P		1	TRUSS DESC. JT 45147	E22052744

Alpha Roof Truss, Maple

Version 8.530 S Feb 23 2022 MiTek Industries, Inc. Tue Jun 7 11:59:27 2022 Page 1

ID: 01SUN7GZ3P25I3oMs5H1nyKJTP-aSXQSLyMiK0wo2rH?DFLtjkQa3p7aF08nfDuxOz8hdU

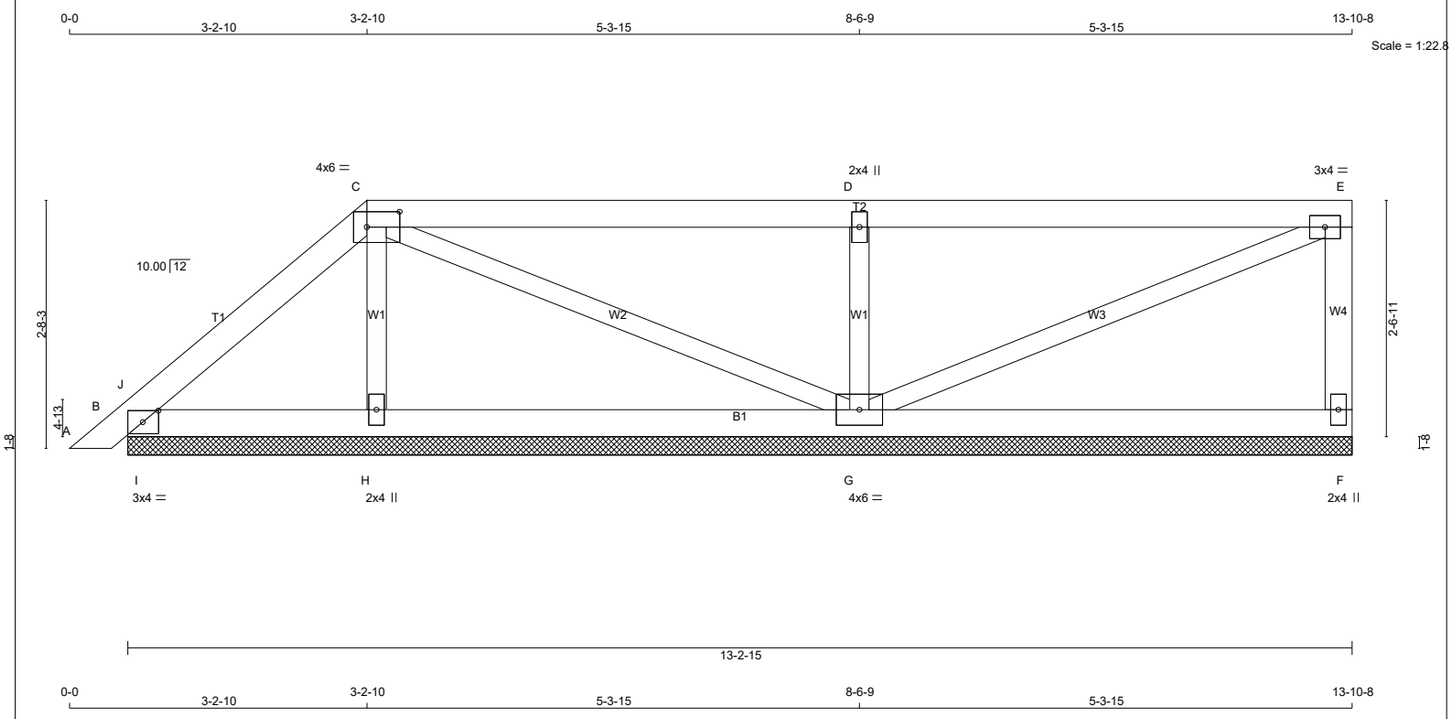

TOTAL WEIGHT = 46 lb

[M]

LUMBER

N. L. G. A. RULES

CHORDS	SIZE		LUMBER	DESCR.
A - C	2x4	DRY	No.2	SPF
C - E	2x4	DRY	No.2	SPF
F - E	2x4	DRY	No.2	SPF
B - F	2x4	DRY	No.2	SPF
ALL WEBS	2x3	DRY	No.2	SPF

DRY: SEASONED LUMBER.

PLATES (table is in inches)

JT	TYPE	PLATES	W	LEN	Y	X
B	TMB1-I	MT20	3.0	4.0	1.50	2.00
C	TTWW-I	MT20	4.0	6.0	2.00	4.25
D	TMW+w	MT20	2.0	4.0		
E	TMVW-t	MT20	3.0	4.0		
F	BMV1+p	MT20	2.0	4.0		
G	BMWWW1-t	MT20	4.0	6.0		
H	BMW1+w	MT20	2.0	4.0		

DIMENSIONS, SUPPORTS AND LOADINGS SPECIFIED BY FABRICATOR TO BE VERIFIED BY BUILDING DESIGNER

BEARINGS

JT	FACTORED GROSS REACTION VERT	HORZ	MAXIMUM FACTORED GROSS REACTION DOWN	HORZ	UPLIFT	INPUT BRG IN-SX	REQRD BRG IN-SX
F	195	0	195	0	0	13-2-15	1-8
B	196	0	196	0	0	13-2-15	1-8
H	281	0	281	0	0	13-2-15	1-8
G	647	0	647	0	0	13-2-15	1-8

UNFACTORED REACTIONS

JT	1ST LCASE COMBINED	MAX./MIN. COMPONENT REACTIONS SNOW	LIVE	PERM.LIVE	WIND	DEAD	SOIL
F	139	84 / 0	0 / 0	0 / 0	0 / 0	55 / 0	0 / 0
B	137	98 / 0	0 / 0	0 / 0	0 / 0	40 / 0	0 / 0
H	203	110 / 0	0 / 0	0 / 0	0 / 0	93 / 0	0 / 0
G	461	287 / 0	0 / 0	0 / 0	0 / 0	173 / 0	0 / 0

BEARING MATERIAL TO BE SPF NO.2 OR BETTER AT JOINT(S) F, B, H, G

BRACING

TOP CHORD TO BE SHEATHED OR MAX. PURLIN SPACING = 6.25 FT.
MAX. UNBRACED BOTTOM CHORD LENGTH = 10.00 FT OR RIGID CEILING DIRECTLY APPLIED.

ALL PITCH BREAKS AND PERIMETER CORNER JOINTS MUST BE LATERALLY RESTRAINED.

LOADING

TOTAL LOAD CASES: (4)

C H O R D S

MEMB. FR-TO	MAX. FACTORED FORCE (LBS)	FACTORED VERT. LOAD (PLF) FROM	TO	LC1 CSI (LC)	MAX UNBRAC LENGTH
A- B	0 / 12	-78.0	-78.0	0.02 (1)	10.00
B- J	-14 / 0	-78.0	-78.0	0.03 (1)	6.25
J- C	-67 / 0	-78.0	-78.0	0.06 (1)	6.25
C- D	0 / 0	-78.0	-78.0	0.38 (1)	10.00
D- E	0 / 0	-78.0	-78.0	0.38 (1)	10.00
F- E	-156 / 0	0.0	0.0	0.02 (1)	7.81
B- I	0 / 48	-18.5	-18.5	0.06 (1)	10.00
I- H	0 / 48	-18.5	-18.5	0.07 (4)	10.00
H- G	0 / 39	-18.5	-18.5	0.14 (4)	10.00
G- F	0 / 0	-18.5	-18.5	0.13 (4)	10.00

W E B S

MEMB. FR-TO	MAX. FACTORED FORCE (LBS)	MAX CSI (LC)
H- C	-183 / 0	0.03 (1)
C- G	-43 / 0	0.02 (1)
G- D	-519 / 0	0.08 (1)
G- E	0 / 0	0.00 (1)
I- J	-174 / 0	0.00 (1)

DESIGN CRITERIA

SPECIFIED LOADS:

TOP CH.	LL	=	21.0	PSF
	DL	=	6.0	PSF
BOT CH.	LL	=	0.0	PSF
	DL	=	7.4	PSF
TOTAL LOAD		=	34.4	PSF

SPACING = 24.0 IN. C/C

LOADING IN FLAT SECTION BASED ON A SLOPE OF 2.00/12 MINIMUM

THIS TRUSS IS DESIGNED FOR RESIDENTIAL OR SMALL BUILDING REQUIREMENTS OF PART 9, NBCC 2015

THIS DESIGN COMPLIES WITH:
- PART 9 OF BCBC 2018 , ABC 2019
- PART 9 OF OBC 2012 (2019 AMENDMENT)
- CSA 086-14
- TPIC 2014

(55 % OF 23.0 P.S.F. G.S.L. PLUS 8.4 P.S.F. RAIN LOAD) EQUALS 21.0 P.S.F. SPECIFIED ROOF LIVE LOAD

CSI: TC=0.38/1.00 (C-D:1) , BC=0.14/1.00 (G-H:4) , WB=0.08/1.00 (D-G:1) , SSI=0.20/1.00 (D-E:1)

DOL LUMBER=1.00 NAIL=1.00 LS BEND=1.10 COMP=1.10 SHEAR=1.10 TENS= 1.10

COMPANION LIVE LOAD FACTOR = 1.00

TRUSS PLATE MANUFACTURER IS NOT RESPONSIBLE FOR QUALITY CONTROL IN THE TRUSS MANUFACTURING PLANT .

NAIL VALUES

PLATE	GRIP(DRY) (PSI) MAX	MIN	SHEAR (PLI) MAX	MIN	SECTION (PLI) MAX	MIN
MT20	650	371	1747	788	1987	1873

PLATE PLACEMENT TOL. = 0.250 inches

PLATE ROTATION TOL. = 5.0 Deg.

JSI GRIP= 0.26 (D) (INPUT = 0.90)
JSI METAL= 0.11 (D) (INPUT = 1.00)

LATERAL BRACE(S) SHOWN SHALL BE 2X4 SPF#2

JOB NAME	TRUSS NAME	QUANTITY	PLY	JOB DESC.	DRWG NO.
343177	H12P		1	TRUSS DESC. JT 45147	E22052745

Alpa Roof Truss, Maple

Version 8.530 S Feb 23 2022 MiTek Industries, Inc. Tue Jun 7 11:59:28 2022 Page 1

ID: 01SUN7GZ3P25I3oMs5H1nyKJTP-2e5ofgz Te8nPBQTZwmaPxGa5S7BJgNH0JyRTqz8hqT

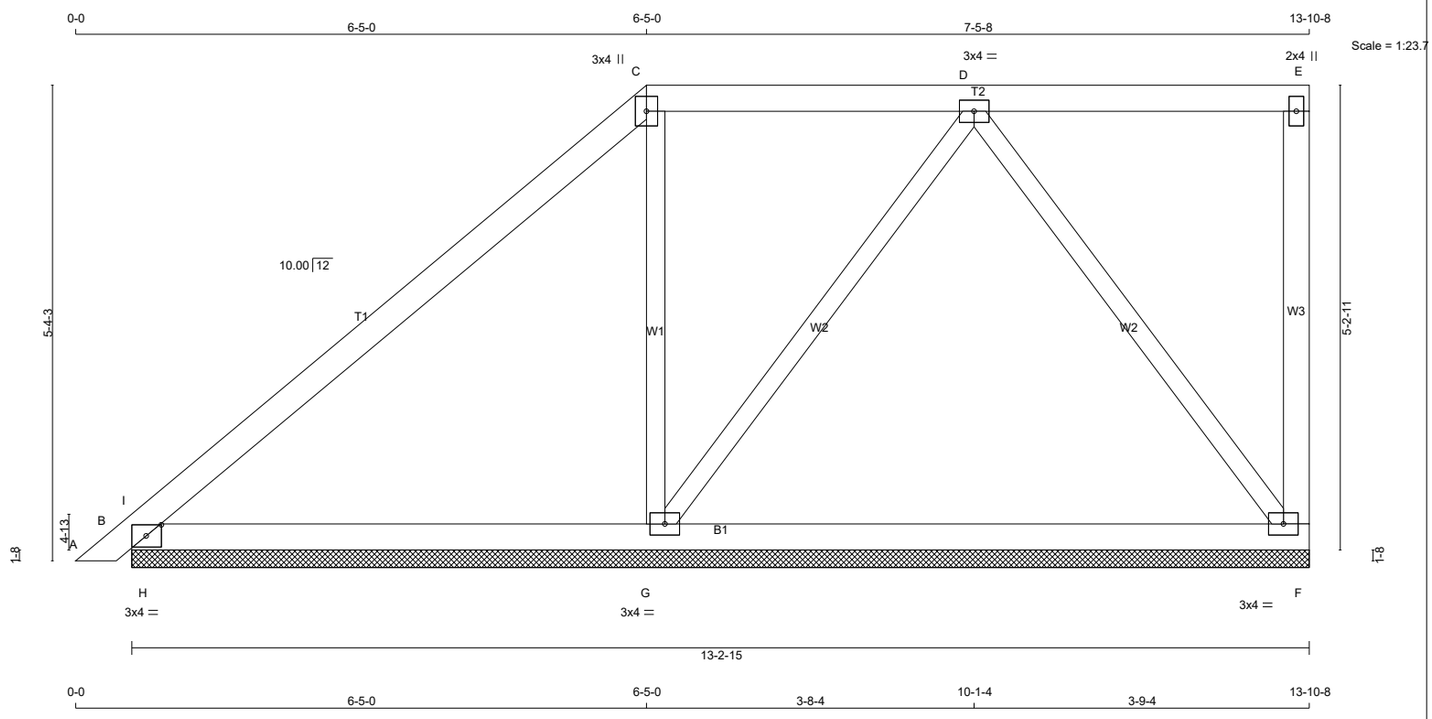

TOTAL WEIGHT = 52 lb

[M]

LUMBER

N. L. G. A. RULES

CHORDS	SIZE		LUMBER	DESCR.
A - C	2x4	DRY	No.2	SPF
C - E	2x4	DRY	No.2	SPF
F - E	2x4	DRY	No.2	SPF
B - F	2x4	DRY	No.2	SPF
ALL WEBS	2x3	DRY	No.2	SPF

DRY: SEASONED LUMBER.

PLATES (table is in inches)

JT	TYPE	PLATES	W	LEN	Y	X
B	TMB1-l	MT20	3.0	4.0	1.50	2.00
C	TTW+p	MT20	3.0	4.0		
D	TMWW-t	MT20	3.0	4.0		
E	TMV+p	MT20	2.0	4.0		
F	BMVW1-t	MT20	3.0	4.0		
G	BMWW1-t	MT20	3.0	4.0		

LATERAL BRACE(S) SHOWN SHALL BE 2X4 SPF#2

DIMENSIONS, SUPPORTS AND LOADINGS SPECIFIED BY FABRICATOR TO BE VERIFIED BY BUILDING DESIGNER

BEARINGS

JT	FACTORED GROSS REACTION VERT	HORZ	MAXIMUM FACTORED GROSS REACTION DOWN	HORZ	UPLIFT	INPUT BRG IN-SX	REQRD BRG IN-SX
F	407	0	407	0	0	13-2-15	1-8
B	391	0	391	0	0	13-2-15	1-8
G	521	0	521	0	0	13-2-15	1-8

UNFACTORED REACTIONS

JT	1ST LCASE COMBINED	MAX./MIN. COMPONENT REACTIONS SNOW	LIVE	PERM.LIVE	WIND	DEAD	SOIL
F	288	188 / 0	0 / 0	0 / 0	0 / 0	101 / 0	0 / 0
B	276	188 / 0	0 / 0	0 / 0	0 / 0	88 / 0	0 / 0
G	376	204 / 0	0 / 0	0 / 0	0 / 0	173 / 0	0 / 0

BEARING MATERIAL TO BE SPF NO.2 OR BETTER AT JOINT(S) F, B, G

BRACING

TOP CHORD TO BE SHEATHED OR MAX. PURLIN SPACING = 6.25 FT.
MAX. UNBRACED BOTTOM CHORD LENGTH = 10.00 FT OR RIGID CEILING DIRECTLY APPLIED.

ALL PITCH BREAKS AND PERIMETER CORNER JOINTS MUST BE LATERALLY RESTRAINED.

LOADING

TOTAL LOAD CASES: (4)

CHORDS

MEMB. FR-TO	MAX. FACTORED FORCE (LBS)	FACTORED VERT. LOAD LC1 (PLF) FROM	TO	MAX CSI (LC)	MAX. UNBRAC LENGTH
A- B	0 / 12	-78.0	-78.0	0.02 (1)	10.00
B- I	0 / 248	-78.0	-78.0	0.22 (1)	10.00
I- C	-160 / 0	-78.0	-78.0	0.33 (1)	6.25
C- D	-106 / 0	-78.0	-78.0	0.18 (1)	6.25
D- E	0 / 0	-78.0	-78.0	0.18 (1)	10.00
F- E	-112 / 0	0.0	0.0	0.05 (1)	7.81
B- H	0 / 111	-18.5	-18.5	0.27 (1)	10.00
H- G	0 / 111	-18.5	-18.5	0.27 (1)	10.00
G- F	0 / 189	-18.5	-18.5	0.27 (4)	10.00

WEBS

MEMB. FR-TO	MAX. FACTORED FORCE (LBS)	MAX CSI (LC)
G- C	-208 / 0	0.08 (1)
G- D	-141 / 0	0.09 (1)
D- F	-311 / 0	0.20 (1)
H- I	-779 / 0	0.00 (1)

DESIGN CRITERIA

SPECIFIED LOADS:

TOP CH.	LL	=	21.0	PSF
	DL	=	6.0	PSF
BOT CH.	LL	=	0.0	PSF
	DL	=	7.4	PSF
TOTAL LOAD		=	34.4	PSF

SPACING = 24.0 IN. C/C

LOADING IN FLAT SECTION BASED ON A SLOPE OF 2.00/12 MINIMUM

THIS TRUSS IS DESIGNED FOR RESIDENTIAL OR SMALL BUILDING REQUIREMENTS OF PART 9, NBCC 2015

THIS DESIGN COMPLIES WITH:
- PART 9 OF BCBC 2018 , ABC 2019
- PART 9 OF OBC 2012 (2019 AMENDMENT)
- CSA 086-14
- TPIC 2014

(55 % OF 23.0 P.S.F. G.S.L. PLUS 8.4 P.S.F. RAIN LOAD) EQUALS 21.0 P.S.F. SPECIFIED ROOF LIVE LOAD

CSI: TC=0.33/1.00 (C-I:1) , BC=0.27/1.00 (B-H:1) , WB=0.20/1.00 (D-F:1) , SSI=0.61/1.00 (B-H:1)

DOL LUMBER=1.00 NAIL=1.00 LS BEND=1.10 COMP=1.10 SHEAR=1.10 TENS= 1.10

COMPANION LIVE LOAD FACTOR = 1.00

TRUSS PLATE MANUFACTURER IS NOT RESPONSIBLE FOR QUALITY CONTROL IN THE TRUSS MANUFACTURING PLANT .

NAIL VALUES

PLATE	GRIP(DRY) (PSI) MAX	MIN	SHEAR (PLI) MAX	MIN	SECTION (PLI) MAX	MIN
MT20	650	371	1747	788	1987	1873

PLATE PLACEMENT TOL. = 0.250 inches

PLATE ROTATION TOL. = 5.0 Deg.

JSI GRIP= 0.37 (F) (INPUT = 0.90)
JSI METAL= 0.08 (B) (INPUT = 1.00)

JOB NAME	TRUSS NAME	QUANTITY	PLY	JOB DESC.	DRWG NO.
343177	H13P		1	TRUSS DESC. JT 45147	E22052746

Alpa Roof Truss, Maple

Version 8.530 S Feb 23 2022 MiTek Industries, Inc. Tue Jun 7 11:59:29 2022 Page 1

ID: 01SUN7GZ3P25I3oMs5H1nyKJTP-WrfBt0 dEyGe1L?q7eHpy8pn3sV225LREzi??Gz8hqS

Scale = 1:34.7

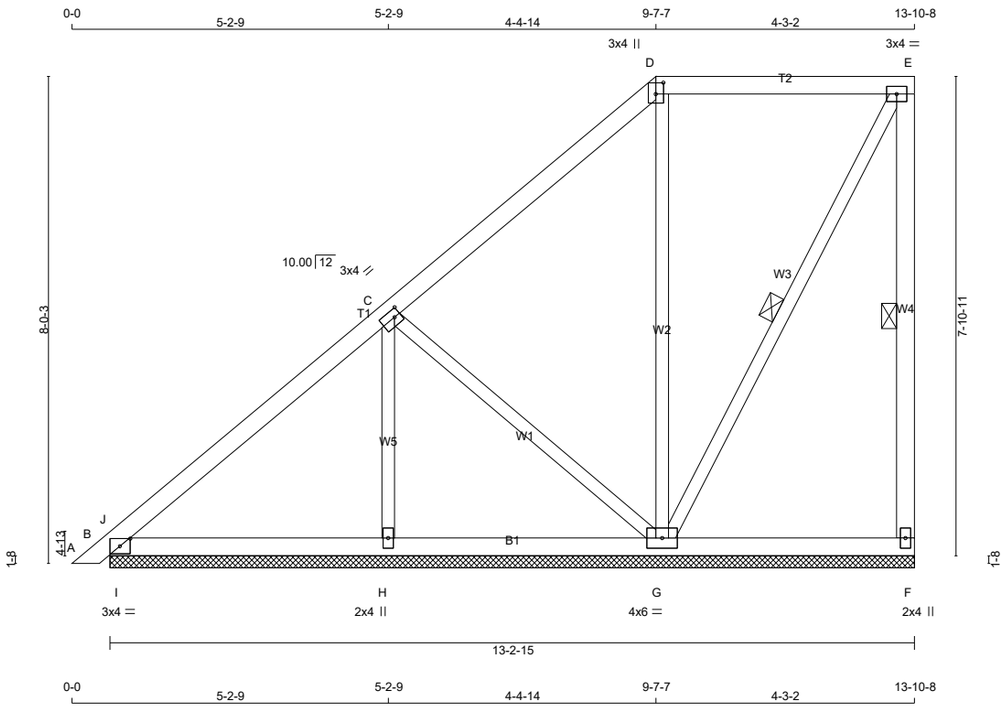

TOTAL WEIGHT = 63 lb

[M]

LUMBER

N. L. G. A. RULES

CHORDS	SIZE		LUMBER	DESCR.
A - D	2x4	DRY	No.2	SPF
D - E	2x4	DRY	No.2	SPF
F - E	2x4	DRY	No.2	SPF
B - F	2x4	DRY	No.2	SPF
ALL WEBS	2x3	DRY	No.2	SPF

DRY: SEASONED LUMBER.

PLATES (table is in inches)

JT	TYPE	PLATES	W	LEN	Y	X
B	TMB1-l	MT20	3.0	4.0	1.50	2.00
C	TMWW-t	MT20	3.0	4.0	1.50	1.25
D	TTW+p	MT20	3.0	4.0	2.25	1.50
E	TMVW-t	MT20	3.0	4.0		
F	BMV1+p	MT20	2.0	4.0		
G	BMWWW1-t	MT20	4.0	6.0		
H	BMW1+w	MT20	2.0	4.0		

LATERAL BRACE(S) SHOWN SHALL BE 2X4 SPF#2

LICENSED PROFESSIONAL ENGINEER
Y. WIDYA
100225448
06/07/2022
PROVINCE OF ONTARIO

DIMENSIONS, SUPPORTS AND LOADINGS SPECIFIED BY FABRICATOR TO BE VERIFIED BY BUILDING DESIGNER

BEARINGS

JT	FACTORED GROSS REACTION VERT	HORZ	MAXIMUM FACTORED GROSS REACTION DOWN	HORZ	UPLIFT	INPUT BRG IN-SX	REQRD BRG IN-SX
F	185	0	185	0	0	13-2-15	1-8
B	297	0	297	0	0	13-2-15	1-8
H	356	0	356	0	0	13-2-15	1-8
G	483	0	483	0	0	13-2-15	1-8

UNFACTORED REACTIONS

JT	1ST LCASE COMBINED	MAX./MIN. COMPONENT REACTIONS SNOW	LIVE	PERM.LIVE	WIND	DEAD	SOIL
F	131	82 / 0	0 / 0	0 / 0	0 / 0	49 / 0	0 / 0
B	210	139 / 0	0 / 0	0 / 0	0 / 0	71 / 0	0 / 0
H	256	146 / 0	0 / 0	0 / 0	0 / 0	110 / 0	0 / 0
G	344	212 / 0	0 / 0	0 / 0	0 / 0	132 / 0	0 / 0

BEARING MATERIAL TO BE SPF NO.2 OR BETTER AT JOINT(S) F, B, H, G

BRACING

TOP CHORD TO BE SHEATHED OR MAX. PURLIN SPACING = 6.25 FT.
MAX. UNBRACED BOTTOM CHORD LENGTH = 10.00 FT OR RIGID CEILING DIRECTLY APPLIED.

ALL PITCH BREAKS AND PERIMETER CORNER JOINTS MUST BE LATERALLY RESTRAINED.

1 LATERAL BRACE(S) AT 1/ 2 LENGTH OF E-F, E-G.

END VERTICAL(S) MUST BE SHEATHED OR HAVE BRACES AS INDICATED IN THE MAX. UNBRACED LENGTH COLUMN OF THE TABLE BELOW

LOADING

TOTAL LOAD CASES: (4)

CHORDS

MEMB. FR-TO	MAX. FACTORED FORCE (LBS)	FACTORED VERT. LOAD (PLF) FROM	TO	LC1	MAX CSI (LC)	MAX. UNBRAC LENGTH
A- B	0 / 12	-78.0	-78.0	0.02 (1)		10.00
B- J	-62 / 0	-78.0	-78.0	0.04 (1)		6.25
J- C	-109 / 0	-78.0	-78.0	0.25 (1)		6.25
C- D	-23 / 0	-78.0	-78.0	0.25 (1)		6.25
D- E	0 / 7	-78.0	-78.0	0.24 (1)		10.00
F- E	-153 / 0	0.0	0.0	0.04 (1)		6.25
B- I	0 / 101	-18.5	-18.5	0.10 (1)		10.00
I- H	0 / 101	-18.5	-18.5	0.11 (1)		10.00
H- G	0 / 101	-18.5	-18.5	0.10 (4)		10.00
G- F	0 / 0	-18.5	-18.5	0.08 (4)		10.00

WEBS

MEMB. FR-TO	MAX. FACTORED FORCE (LBS)	MAX CSI (LC)
H- C	-242 / 0	0.06 (1)
C- G	-137 / 0	0.08 (1)
G- D	-299 / 0	0.35 (1)
G- E	-15 / 0	0.01 (1)
I- J	-236 / 9	0.00 (1)

DESIGN CRITERIA

SPECIFIED LOADS:

TOP CH.	LL	=	21.0	PSF
	DL	=	6.0	PSF
BOT CH.	LL	=	0.0	PSF
	DL	=	7.4	PSF
TOTAL LOAD		=	34.4	PSF

SPACING = 24.0 IN. C/C

LOADING IN FLAT SECTION BASED ON A SLOPE OF 2.00/12 MINIMUM

THIS TRUSS IS DESIGNED FOR RESIDENTIAL OR SMALL BUILDING REQUIREMENTS OF PART 9, NBCC 2015

THIS DESIGN COMPLIES WITH:
- PART 9 OF BCBC 2018 , ABC 2019
- PART 9 OF OBC 2012 (2019 AMENDMENT)
- CSA 086-14
- TPIC 2014

(55 % OF 23.0 P.S.F. G.S.L. PLUS 8.4 P.S.F. RAIN LOAD) EQUALS 21.0 P.S.F. SPECIFIED ROOF LIVE LOAD

CSI: TC=0.25/1.00 (C-J:1) , BC=0.11/1.00 (H-I:1) , WB=0.35/1.00 (D-G:1) , SSI=0.20/1.00 (B-I:1)

DOL LUMBER=1.00 NAIL=1.00 LS BEND=1.10 COMP=1.10 SHEAR=1.10 TENS= 1.10

COMPANION LIVE LOAD FACTOR = 1.00

TRUSS PLATE MANUFACTURER IS NOT RESPONSIBLE FOR QUALITY CONTROL IN THE TRUSS MANUFACTURING PLANT .

NAIL VALUES

PLATE	GRIP(DRY) (PSI) MAX	MIN	SHEAR (PLI) MAX	MIN	SECTION (PLI) MAX	MIN
MT20	650	371	1747	788	1987	1873

PLATE PLACEMENT TOL. = 0.250 inches

PLATE ROTATION TOL. = 5.0 Deg.

JSI GRIP= 0.27 (C) (INPUT = 0.90)
JSI METAL= 0.07 (D) (INPUT = 1.00)

JOB NAME	TRUSS NAME	QUANTITY	PLY	JOB DESC.	DRWG NO.
343177	H14P		1	TRUSS DESC. JT 45147	E22052747

Alpa Roof Truss, Maple

Version 8.530 S Feb 23 2022 MiTek Industries, Inc. Tue Jun 7 11:59:30 2022 Page 1

ID: 01SUN7GZ3P25I3oMs5H1nyKJTP-?1DZ4M?F?FOVfVasqLo2UMLuSGq_nZyaTdRYYiz8hqR

Scale = 1:46.4

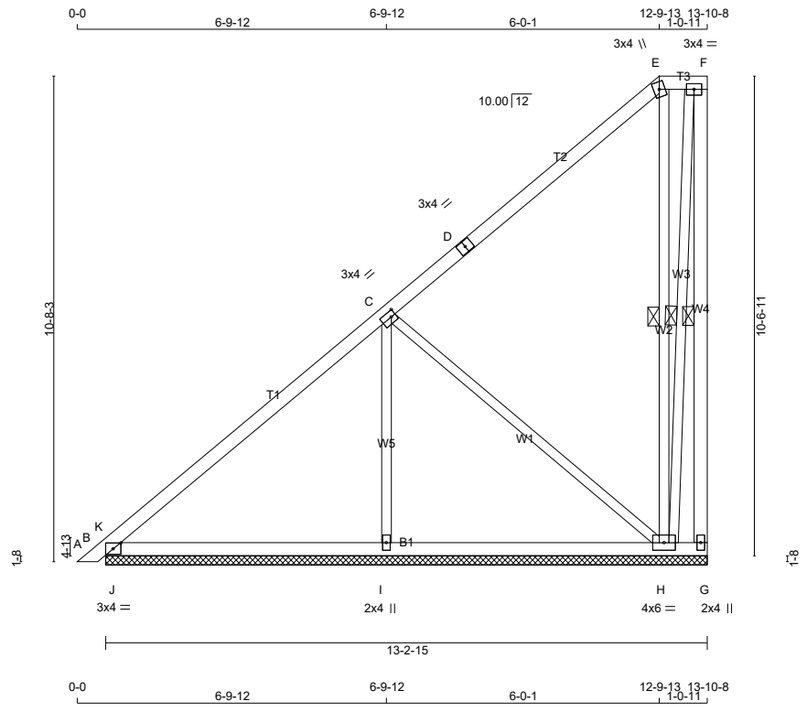

TOTAL WEIGHT = 73 lb

LUMBER

N. L. G. A. RULES

CHORDS	SIZE		LUMBER	DESCR.
A - D	2x4	DRY	No.2	SPF
D - E	2x4	DRY	No.2	SPF
E - F	2x4	DRY	No.2	SPF
G - F	2x4	DRY	No.2	SPF
B - G	2x4	DRY	No.2	SPF
ALL WEBS	2x3	DRY	No.2	SPF

DRY: SEASONED LUMBER.

PLATES (table is in inches)

JT	TYPE	PLATES	W	LEN	Y	X
B	TMB1-l	MT20	3.0	4.0	1.50	2.00
C	TMWW-t	MT20	3.0	4.0	1.50	1.25
D	TS-t	MT20	3.0	4.0		
E	TTW+m	MT20	3.0	4.0		
F	TMVW-t	MT20	3.0	4.0		
G	BMV1+p	MT20	2.0	4.0		
H	BMWWW1-t	MT20	4.0	6.0		
I	BMW1+w	MT20	2.0	4.0		

LATERAL BRACE(S) SHOWN SHALL BE 2X4 SPF#2

DIMENSIONS, SUPPORTS AND LOADINGS SPECIFIED BY FABRICATOR TO BE VERIFIED BY BUILDING DESIGNER

BEARINGS

JT	FACTORED GROSS REACTION VERT	HORZ	MAXIMUM FACTORED GROSS REACTION DOWN	HORZ	UPLIFT	INPUT BRG IN-SX	REQRD BRG IN-SX
G	6	0	6	0	-33	13-2-15	1-8
B	395	0	395	0	0	13-2-15	1-8
I	477	0	477	0	0	13-2-15	1-8
H	443	0	443	0	0	13-2-15	1-8

PROVIDE ANCHORAGE AT BEARING JOINT G FOR 150 LBS FACTORED UPLIFT

UNFACTORED REACTIONS

JT	1ST LCASE COMBINED	MAX./MIN. COMPONENT REACTIONS SNOW	LIVE	PERM.LIVE	WIND	DEAD	SOIL
G	-0	23 / 0	0 / 0	0 / 0	0 / 0	0 / -23	0 / 0
B	279	184 / 0	0 / 0	0 / 0	0 / 0	95 / 0	0 / 0
I	343	194 / 0	0 / 0	0 / 0	0 / 0	148 / 0	0 / 0
H	319	177 / 0	0 / 0	0 / 0	0 / 0	142 / 0	0 / 0

BEARING MATERIAL TO BE SPF NO.2 OR BETTER AT JOINT(S) G, B, I, H

BRACING

TOP CHORD TO BE SHEATHED OR MAX. PURLIN SPACING = 6.25 FT.
MAX. UNBRACED BOTTOM CHORD LENGTH = 10.00 FT OR RIGID CEILING DIRECTLY APPLIED.

ALL PITCH BREAKS AND PERIMETER CORNER JOINTS MUST BE LATERALLY RESTRAINED.

1 LATERAL BRACE(S) AT 1/ 2 LENGTH OF F-G, E-H, F-H.

END VERTICAL(S) MUST BE SHEATHED OR HAVE BRACES AS INDICATED IN THE MAX. UNBRACED LENGTH COLUMN OF THE TABLE BELOW

LOADING

TOTAL LOAD CASES: (4)

CHORDS

MEMB. FR-TO	MAX. FACTORED FORCE (LBS)	FACTORED VERT. LOAD LC1 (PLF) FROM	TO	MAX CSI (LC)	MAX. UNBRAC LENGTH
A- B	0 / 12	-78.0	-78.0	0.02 (1)	10.00
B- K	-87 / 0	-78.0	-78.0	0.09 (1)	6.25
K- C	-165 / 0	-78.0	-78.0	0.46 (1)	6.25
C- D	-37 / 0	-78.0	-78.0	0.46 (1)	6.25
D- E	-37 / 0	-78.0	-78.0	0.46 (1)	6.25
E- F	0 / 1	-78.0	-78.0	0.02 (1)	10.00
G- F	-27 / 0	0.0	0.0	0.02 (1)	6.25
B- J	0 / 149	-18.5	-18.5	0.17 (1)	10.00
J- I	0 / 149	-18.5	-18.5	0.19 (4)	10.00
I- H	0 / 149	-18.5	-18.5	0.19 (4)	10.00
H- G	0 / 0	-18.5	-18.5	0.10 (4)	10.00

WEBS

MEMB. FR-TO	MAX. FACTORED FORCE (LBS)	MAX CSI (LC)
I- C	-317 / 0	0.15 (1)
C- H	-195 / 0	0.26 (1)
H- E	-219 / 0	0.17 (1)
H- F	-14 / 0	0.01 (1)
J- K	-422 / 10	0.00 (1)

DESIGN CRITERIA

SPECIFIED LOADS:

TOP CH.	LL	=	21.0	PSF
	DL	=	6.0	PSF
BOT CH.	LL	=	0.0	PSF
	DL	=	7.4	PSF
TOTAL LOAD		=	34.4	PSF

SPACING = 24.0 IN. C/C

LOADING IN FLAT SECTION BASED ON A SLOPE OF 2.00/12 MINIMUM

THIS TRUSS IS DESIGNED FOR RESIDENTIAL OR SMALL BUILDING REQUIREMENTS OF PART 9, NBCC 2015

THIS DESIGN COMPLIES WITH:
- PART 9 OF BCBC 2018 , ABC 2019
- PART 9 OF OBC 2012 (2019 AMENDMENT)
- CSA 086-14
- TPIC 2014

(55 % OF 23.0 P.S.F. G.S.L. PLUS 8.4 P.S.F. RAIN LOAD) EQUALS 21.0 P.S.F. SPECIFIED ROOF LIVE LOAD

CSI: TC=0.46/1.00 (C-K:1) , BC=0.19/1.00 (I-J:4) , WB=0.26/1.00 (C-H:1) , SSI=0.35/1.00 (B-J:1)

DOL LUMBER=1.00 NAIL=1.00 LS BEND=1.10 COMP=1.10 SHEAR=1.10 TENS= 1.10

COMPANION LIVE LOAD FACTOR = 1.00

TRUSS PLATE MANUFACTURER IS NOT RESPONSIBLE FOR QUALITY CONTROL IN THE TRUSS MANUFACTURING PLANT .

NAIL VALUES

PLATE	GRIP(DRY) (PSI) MAX	MIN	SHEAR (PLI) MAX	MIN	SECTION (PLI) MAX	MIN
MT20	650	371	1747	788	1987	1873

PLATE PLACEMENT TOL. = 0.250 inches

PLATE ROTATION TOL. = 5.0 Deg.

JSI GRIP= 0.52 (D) (INPUT = 0.90)
JSI METAL= 0.11 (D) (INPUT = 1.00)

JOB NAME	TRUSS NAME	QUANTITY	PLY	JOB DESC.		DRWG NO.
343177	H15P		1	TRUSS DESC.	JT 45147	E22052748

Alpa Roof Truss, Maple

Version 8.530 S Feb 23 2022 MiTek Industries, Inc. Tue Jun 7 11:59:31 2022 Page 1

ID: 01SUN7GZ3P25l3oMs5H1nyKJTP-TDnxIi0tmZWMGf92E3KH1Zu2pq9IW2PjiHB549z8hqQ

Scale = 1:49.7

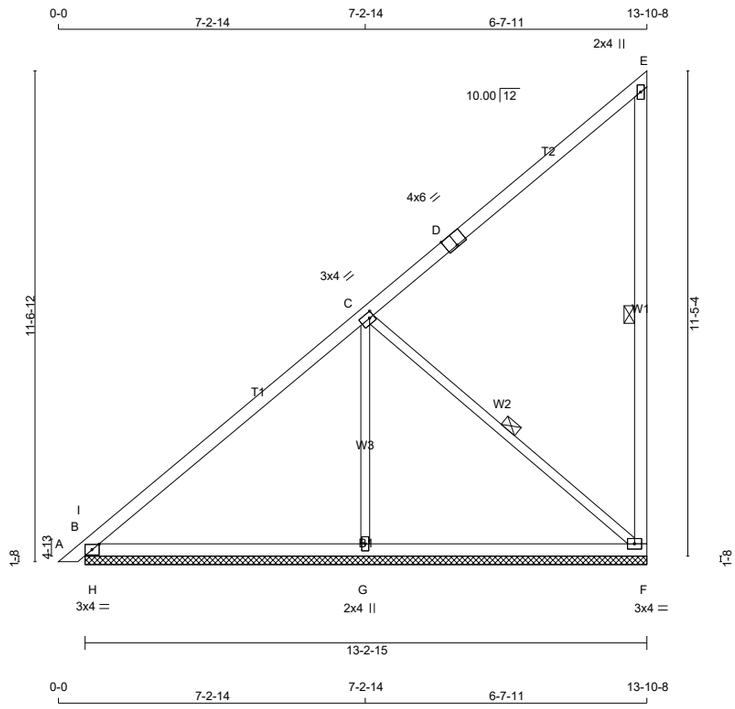

TOTAL WEIGHT = 3 X 59 = 177 lb

[M]

LUMBER

N. L. G. A. RULES

CHORDS	SIZE		LUMBER	DESCR.
A - D	2x4	DRY	No.2	SPF
D - E	2x4	DRY	No.2	SPF
F - E	2x4	DRY	No.2	SPF
B - F	2x4	DRY	No.2	SPF
ALL WEBS	2x3	DRY	No.2	SPF

DRY: SEASONED LUMBER.

PLATES (table is in inches)

JT	TYPE	PLATES	W	LEN	Y	X
B	TMB1-l	MT20	3.0	4.0	1.50	2.00
C	TMWW-t	MT20	3.0	4.0	1.50	1.25
D	TS-t	MT20	4.0	6.0	Edge	3.00
E	TMV+p	MT20	2.0	4.0		
F	BMVW1-t	MT20	3.0	4.0		
G	BMW1+w	MT20	2.0	4.0		

Edge - INDICATES REFERENCE CORNER OF PLATE TOUCHES EDGE OF CHORD.

DIMENSIONS, SUPPORTS AND LOADINGS SPECIFIED BY FABRICATOR TO BE VERIFIED BY BUILDING DESIGNER

BEARINGS

JT	FACTORED GROSS REACTION VERT	HORZ	MAXIMUM FACTORED GROSS REACTION DOWN	HORZ	UPLIFT	INPUT BRG IN-SX	REQRD BRG IN-SX
F	377	0	377	0	0	13-2-15	1-8
B	417	0	417	0	0	13-2-15	1-8
G	526	0	526	0	0	13-2-15	1-8

UNFACTORED REACTIONS

JT	1ST LCASE COMBINED	MAX./MIN. COMPONENT REACTIONS SNOW	LIVE	PERM.LIVE	WIND	DEAD	SOIL
F	267	174 / 0	0 / 0	0 / 0	0 / 0	93 / 0	0 / 0
B	295	196 / 0	0 / 0	0 / 0	0 / 0	99 / 0	0 / 0
G	379	209 / 0	0 / 0	0 / 0	0 / 0	170 / 0	0 / 0

BEARING MATERIAL TO BE SPF NO.2 OR BETTER AT JOINT(S) F, B, G

BRACING

TOP CHORD TO BE SHEATHED OR MAX. PURLIN SPACING = 6.25 FT.
MAX. UNBRACED BOTTOM CHORD LENGTH = 10.00 FT OR RIGID CEILING DIRECTLY APPLIED.

ALL PITCH BREAKS AND PERIMETER CORNER JOINTS MUST BE LATERALLY RESTRAINED.

1 LATERAL BRACE(S) AT 1/ 2 LENGTH OF E-F, C-F.

END VERTICAL(S) MUST BE SHEATHED OR HAVE BRACES AS INDICATED IN THE MAX. UNBRACED LENGTH COLUMN OF THE TABLE BELOW

LOADING

TOTAL LOAD CASES: (4)

CHORDS

MEMB. FR-TO	MAX. FACTORED FORCE (LBS)	FACTORED VERT. LOAD LC1 (PLF) FROM	TO	MAX CSI (LC)	MAX. UNBRAC LENGTH
A- B	0 / 12	-78.0	-78.0	0.02 (1)	10.00
B- I	-84 / 0	-78.0	-78.0	0.10 (1)	6.25
I- C	-178 / 0	-78.0	-78.0	0.55 (1)	6.25
C- D	-38 / 0	-78.0	-78.0	0.54 (1)	6.25
D- E	-38 / 0	-78.0	-78.0	0.54 (1)	6.25
F- E	-199 / 0	0.0	0.0	0.13 (1)	6.25
B- H	0 / 162	-18.5	-18.5	0.19 (1)	10.00
H- G	0 / 162	-18.5	-18.5	0.25 (4)	10.00
G- F	0 / 162	-18.5	-18.5	0.25 (4)	10.00

WEBS

MEMB. FR-TO	MAX. FACTORED FORCE (LBS)	MAX CSI (LC)
G- C	-346 / 0	0.19 (1)
C- F	-211 / 0	0.10 (1)
H- I	-471 / 0	0.00 (1)

DESIGN CRITERIA

SPECIFIED LOADS:

TOP CH.	LL	=	21.0	PSF
	DL	=	6.0	PSF
BOT CH.	LL	=	0.0	PSF
	DL	=	7.4	PSF
TOTAL LOAD		=	34.4	PSF

SPACING = 24.0 IN. C/C

THIS TRUSS IS DESIGNED FOR RESIDENTIAL OR SMALL BUILDING REQUIREMENTS OF PART 9, NBCC 2015

THIS DESIGN COMPLIES WITH:
- PART 9 OF BCBC 2018 , ABC 2019
- PART 9 OF OBC 2012 (2019 AMENDMENT)
- CSA 086-14
- TPIC 2014

(55 % OF 23.0 P.S.F. G.S.L. PLUS 8.4 P.S.F. RAIN LOAD) EQUALS 21.0 P.S.F. SPECIFIED ROOF LIVE LOAD

CSI: TC=0.55/1.00 (C-I:1) , BC=0.25/1.00 (F-G:4) , WB=0.19/1.00 (C-G:1) , SSI=0.39/1.00 (B-H:1)

DOL LUMBER=1.00 NAIL=1.00 LS BEND=1.10 COMP=1.10 SHEAR=1.10 TENS= 1.10

COMPANION LIVE LOAD FACTOR = 1.00

TRUSS PLATE MANUFACTURER IS NOT RESPONSIBLE FOR QUALITY CONTROL IN THE TRUSS MANUFACTURING PLANT .

NAIL VALUES

PLATE	GRIP(DRY) (PSI) MAX	MIN	SHEAR (PLI) MAX	MIN	SECTION (PLI) MAX	MIN
MT20	650	371	1747	788	1987	1873

PLATE PLACEMENT TOL. = 0.250 inches

PLATE ROTATION TOL. = 5.0 Deg.

JSI GRIP= 0.44 (D) (INPUT = 0.90)
JSI METAL= 0.15 (D) (INPUT = 1.00)

LATERAL BRACE(S) SHOWN SHALL BE 2X4 SPF#2

JOB NAME	TRUSS NAME	QUANTITY	PLY	JOB DESC.	DRWG NO.
343177	H16		1	TRUSS DESC. JT 45147	E22052749

Alpha Roof Truss, Maple

Version 8.530 S Feb 23 2022 MiTek Industries, Inc. Tue Jun 7 11:59:33 2022 Page 1

ID: 01SUN7GZ3P25I3oMs5H1nyKJTP-PcvhiO17HAn4WzIRMUMl6 zKDThl mQ09bgC81z8hqO

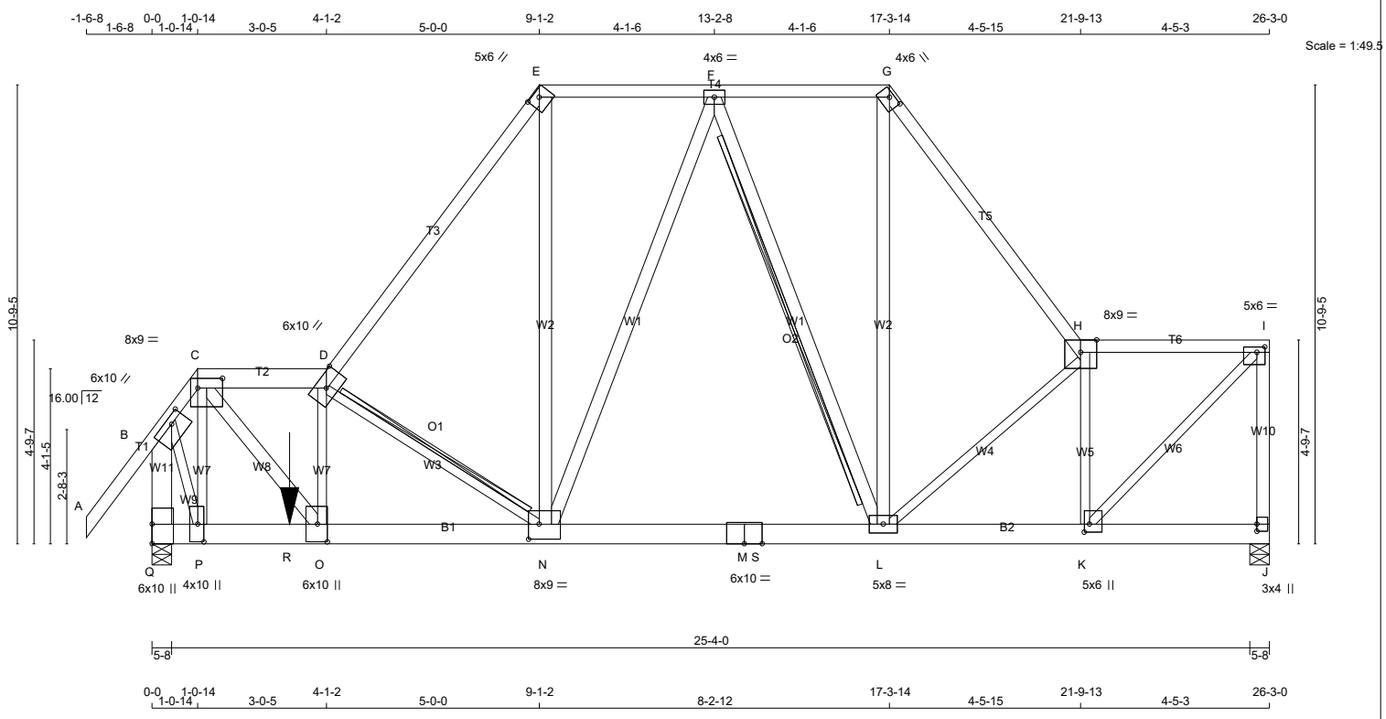

TOTAL WEIGHT = 177 lb

[M]

LUMBER

N. L. G. A. RULES

CHORDS	SIZE		LUMBER	DESCR.
A - C	2x4	DRY	No.2	SPF
C - D	2x6	DRY	No.2	SPF
D - E	2x4	DRY	1650F 1.5E	SPF
E - G	2x4	DRY	No.2	SPF
G - H	2x4	DRY	No.2	SPF
H - I	2x4	DRY	No.2	SPF
J - I	2x4	DRY	No.2	SPF
Q - B	2x6	DRY	No.2	SPF
Q - M	2x6	DRY	1650F 1.5E	SPF
M - J	2x6	DRY	1650F 1.5E	SPF
ALL WEBS	2x3	DRY	No.2	SPF
EXCEPT				
C - O	2x4	DRY	No.2	SPF
N - E	2x4	DRY	No.2	SPF
L - G	2x4	DRY	No.2	SPF
N - F	2x4	DRY	No.2	SPF
F - L	2x4	DRY	No.2	SPF

DRY: SEASONED LUMBER.

PLATES (table is in inches)

JT	TYPE	PLATES	W	LEN	Y	X
B	TMVW-t	MT20	6.0	10.0	1.75	4.00
C	TTWW-l	MT20	8.0	9.0	2.75	7.00
D	TTWW-h	MT20	6.0	10.0	3.00	5.50
E	TTW-h	MT20	5.0	6.0	1.75	3.00
F	TMWW-t	MT20	4.0	6.0		
G	TTW-h	MT20	4.0	6.0	1.25	3.25
H	TTWW-l	MT20	8.0	9.0	Edge	
I	TMVW-t	MT20	5.0	6.0	1.50	2.25
J	BMV1+p	MT20	3.0	4.0	2.00	
K	BMWW+t	MT20	5.0	6.0	2.25	1.50
L	BMWWW-t	MT20	5.0	8.0		
M	BS-t	MT20	6.0	10.0		
N	BMWWW-t	MT20	8.0	9.0	4.25	3.00
O	BMWW+t	MT20	6.0	10.0	5.00	2.75
P	BMWW+t	MT20	4.0	10.0	5.00	1.75
Q	BMV1+t	MT20	6.0	10.0	5.50	

Edge - INDICATES REFERENCE CORNER OF PLATE TOUCHES EDGE OF CHORD.

LATERAL BRACE(S) SHOWN SHALL BE 2X4 SPF#2

DIMENSIONS, SUPPORTS AND LOADINGS SPECIFIED BY FABRICATOR TO BE VERIFIED BY BUILDING DESIGNER

BEARINGS

JT	FACTORED GROSS REACTION VERT	HORZ	MAXIMUM FACTORED GROSS REACTION DOWN	HORZ	UPLIFT	INPUT BRG IN-SX	REQRD BRG IN-SX
J	2399	0	2399	0	0	5-8	4-5
Q	4777	0	4777	0	0	5-8	5-8

UNFACTORED REACTIONS

JT	1ST LCASE COMBINED	SNOW	MAX./MIN. COMPONENT REACTIONS LIVE	PERM.LIVE	WIND	DEAD	SOIL
J	1716	1017 / 0	0 / 0	0 / 0	0 / 0	700 / 0	0 / 0
Q	3409	2066 / 0	0 / 0	0 / 0	0 / 0	1343 / 0	0 / 0

BEARING MATERIAL TO BE SPF NO.2 OR BETTER AT JOINT(S) J, Q
BEARING SIZE FACTOR = 1.15 AT JNT(S) Q (BASED ON SUPPORT DEPTH = 1-8)

BRACING

FOR SECTION E-G, MAX. PURLIN SPACING = 2.00 FT.
FOR OTHER SECTIONS, TOP CHORD TO BE SHEATHED OR MAX. PURLIN SPACING = 3.61 FT.
MAX. UNBRACED BOTTOM CHORD LENGTH = 10.00 FT OR RIGID CEILING DIRECTLY APPLIED.

ALL PITCH BREAKS AND PERIMETER CORNER JOINTS MUST BE LATERALLY RESTRAINED.

2x4 DRY SPF No.2 T-BRACE AT D-N, F-L

FASTEN T AND I-BRACES TO NARROW EDGE OF WEB WITH ONE ROW PER PLY OF 3" COMMON WIRE NAILS @ 6" O.C. WITH 3" MINIMUM END DISTANCE. BRACE MUST COVER 90% OF WEB LENGTH.

END VERTICAL(S) MUST BE SHEATHED OR HAVE BRACES AS INDICATED IN THE MAX. UNBRACED LENGTH COLUMN OF THE TABLE BELOW

LOADING

TOTAL LOAD CASES: (4)

CHORDS

MEMB. FR-TO	MAX. FACTORED FORCE (LBS)	FACTORED VERT. LOAD (PLF) FROM	TO	LC1	MAX CSI (LC)	MAX. UNBRAC LENGTH
A- B	0 / 52	-78.0	-78.0	0.17 (1)		10.00
B- C	-2494 / 0	-78.0	-78.0	0.24 (1)		4.10
C- D	-4174 / 0	-78.0	-78.0	0.15 (1)		4.10
D- E	-3853 / 0	-78.0	-78.0	0.78 (1)		3.67
E- F	-2341 / 0	-93.0	-93.0	0.34 (1)		2.00
F- G	-1771 / 0	-93.0	-93.0	0.30 (1)		2.00
G- H	-2905 / 0	-78.0	-78.0	0.68 (1)		3.61
H- I	-2116 / 0	-78.0	-78.0	0.38 (1)		4.24
J- I	-2307 / 0	0.0	0.0	0.81 (1)		5.56
Q- B	-4919 / 0	0.0	0.0	0.49 (1)		4.81
Q- P	0 / 0	-271.5	-271.5	0.18 (1)		10.00
P- R	0 / 1398	-271.5	-271.5	0.33 (1)		10.00
R- O	0 / 1398	-271.5	-271.5	0.33 (1)		10.00
O- N	0 / 4232	-271.5	-271.5	0.89 (1)		10.00
N- M	0 / 2135	-271.5	-271.5	0.72 (1)		10.00
M- S	0 / 2135	-271.5	-271.5	0.72 (1)		10.00
S- L	0 / 2135	-18.5	-18.5	0.72 (1)		10.00
L- K	0 / 2171	-18.5	-18.5	0.46 (1)		10.00
K- J	0 / 0	-18.5	-18.5	0.12 (1)		10.00

WEBS

MEMB. FR-TO	MAX. FACTORED FORCE (LBS)	MAX CSI (LC)
P- C	-1593 / 0	0.38 (1)
C- O	0 / 4442	0.79 (1)
O- D	-2036 / 0	0.49 (1)
D- N	-2365 / 0	0.74 (1)
N- E	0 / 2715	0.48 (1)
L- G	0 / 1976	0.35 (1)
L- H	-587 / 0	0.41 (1)
K- H	-2294 / 0	0.75 (1)
K- I	0 / 3022	0.75 (1)
B- P	0 / 3074	0.76 (1)
N- F	0 / 579	0.10 (1)
F- L	-1020 / 0	0.92 (1)

FACTORED CONCENTRATED LOADS (LBS)

JT	LOC.	LC1	MAX-	MAX+	FACE	DIR.	TYPE	HEEL	CONN.
R	3-2-12	-787	-787	---	FRONT	VERT	TOTAL	---	C1

CONNECTION REQUIREMENTS

1) **C1:** A SUITABLE HANGER/MECHANICAL CONNECTION IS REQUIRED.

DESIGN CRITERIA

*** SPECIAL LOADS ANALYSIS ***
GEOMETRY AND/OR BASIC LOADS CHANGED BY USER.
LOADS WERE DERIVED FROM USER INPUT
NO FURTHER MODIFICATIONS WERE MADE

SPECIFIED LOADS:

TOP	CH.	LL	=	21.0	PSF
		DL	=	6.0	PSF
BOT	CH.	LL	=	0.0	PSF
		DL	=	7.4	PSF
TOTAL	LOAD		=	34.4	PSF

SPACING = 24.0 IN. C/C

LOADING IN HIGHEST FLAT SECTION BASED ON PIGGYBACK TRUSS WITH SLOPES OF 6.00/12 AND -6.00/12 AND RESPECTIVE HEEL HEIGHTS OF 0-0 AND 0-0 AND AN ADDITIONAL DEAD LOAD OF 6.0 P.S.F.

LOADING IN OTHER FLAT SECTIONS BASED ON A SLOPE OF 6.00/12 AND 6.00/12

GIRDER TYPE: CStdGirder
START DISTANCE = 0-0
START SPAN CARRIED = 12-5-14
END DISTANCE = 14-3-0
END SPAN CARRIED = 12-5-14
END WALL WIDTH = 0-0
APPLIED TO FRONT SIDE OF BOTTOM CHORD.
- ADDT'L LOADS BASED ON 55 % OF GSL.

*** NON STANDARD GIRDER ***
ADDT'L USER-DEFINED LOADS APPLIED TO ALL LOAD CASES.

THIS TRUSS IS DESIGNED FOR RESIDENTIAL OR SMALL BUILDING REQUIREMENTS OF PART 9, NBCC 2015

THIS DESIGN COMPLIES WITH:
- PART 9 OF BCBC 2018 , ABC 2019
- PART 9 OF OBC 2012 (2019 AMENDMENT)
- CSA 086-14
- TPIC 2014

DESIGN ASSUMPTIONS
-OVERHANG NOT TO BE ALTERED OR CUT OFF.

(55 % OF 23.0 P.S.F. G.S.L. PLUS 8.4 P.S.F. RAIN LOAD) EQUALS 21.0 P.S.F. SPECIFIED ROOF LIVE LOAD

ALLOWABLE DEFL.(LL)= L/360 (0.88")
CALCULATED VERT. DEFL.(LL) = L/ 999 (0.20")
ALLOWABLE DEFL.(TL)= L/360 (0.88")
CALCULATED VERT. DEFL.(TL) = L/ 778 (0.40")

CSI: TC=0.81/1.00 (I-J:1) , BC=0.89/1.00 (N-O:1) , WB=0.92/1.00 (F-L:1) , SSI=0.67/1.00 (L-N:1)

DOL LUMBER=1.00 NAIL=1.00 LS BEND=1.00 COMP=1.00 SHEAR=1.00 TENS= 1.00

COMPANION LIVE LOAD FACTOR = 1.00

AUTOSOLVE RIGHT HEEL ONLY

TRUSS PLATE MANUFACTURER IS NOT RESPONSIBLE FOR QUALITY CONTROL IN THE TRUSS MANUFACTURING PLANT .

NAIL VALUES

PLATE	GRIP(DRY) (PSI) MAX	MIN	SHEAR (PLI) MAX	MIN	SECTION (PLI) MAX	MIN
MT20	650	371	1747	788	1987	1873

PLATE PLACEMENT TOL. = 0.250 inches

PLATE ROTATION TOL. = 5.0 Deg.

JSI GRIP= 0.89 (P) (INPUT = 0.90)
JSI METAL= 0.85 (O) (INPUT = 1.00)

JOB NAME	TRUSS NAME	QUANTITY	PLY	JOB DESC.	DRWG NO.
343177	H17		1	TRUSS DESC. JT 45147	E22052750

Alpha Roof Truss, Maple

Version 8.530 S Feb 23 2022 MiTek Industries, Inc. Tue Jun 7 11:59:34 2022 Page 1

ID: 01SUN7GZ3P25I3oMs5H1nyKJTP-toS4wk2l2Uvx86tdvBt fCWZqtA5jGJAOFPlhUz8hqN

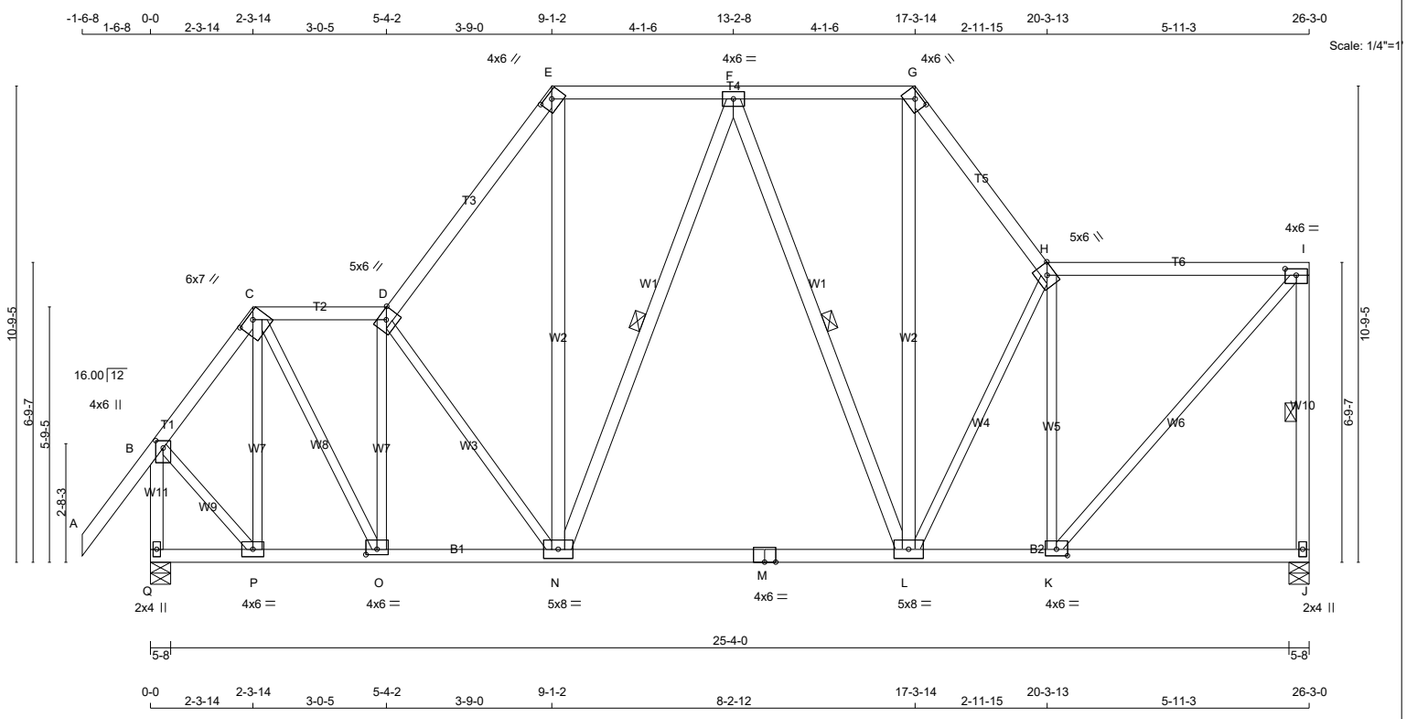

TOTAL WEIGHT = 167 lb

LUMBER

N. L. G. A. RULES

CHORDS	SIZE		LUMBER	DESCR.
A - C	2x4	DRY	No.2	SPF
C - D	2x4	DRY	No.2	SPF
D - E	2x4	DRY	No.2	SPF
E - G	2x4	DRY	No.2	SPF
G - H	2x4	DRY	No.2	SPF
H - I	2x4	DRY	No.2	SPF
J - I	2x4	DRY	No.2	SPF
Q - B	2x4	DRY	No.2	SPF
Q - M	2x4	DRY	No.2	SPF
M - J	2x4	DRY	No.2	SPF
ALL WEBS EXCEPT	2x3	DRY	No.2	SPF
N - E	2x4	DRY	No.2	SPF
L - G	2x4	DRY	No.2	SPF
N - F	2x4	DRY	No.2	SPF
F - L	2x4	DRY	No.2	SPF

DRY: SEASONED LUMBER.

PLATES (table is in inches)

JT	TYPE	PLATES	W	LEN	Y	X
B	TMVW+p	MT20	4.0	6.0	2.00	2.00
C	TTWW-h	MT20	6.0	7.0	1.50	3.75
D	TTWW-h	MT20	5.0	6.0	Edge	
E	TTW-h	MT20	4.0	6.0	1.50	3.00
F	TMWW-t	MT20	4.0	6.0		
G	TTW-h	MT20	4.0	6.0	1.50	3.00
H	TTWW-h	MT20	5.0	6.0	Edge	
I	TMVW-t	MT20	4.0	6.0	1.75	3.00
J	BMV1+p	MT20	2.0	4.0		
K	BMWW-t	MT20	4.0	6.0	1.75	3.00
L	BMWWW-t	MT20	5.0	8.0		
M	BS-t	MT20	4.0	6.0		
N	BMWWW-t	MT20	5.0	8.0		
O	BMWW-t	MT20	4.0	6.0	1.50	3.00
P	BMWW-t	MT20	4.0	6.0		
Q	BMV1+p	MT20	2.0	4.0		

Edge - INDICATES REFERENCE CORNER OF PLATE TOUCHES EDGE OF CHORD.

LATERAL BRACE(S) SHOWN SHALL BE 2X4 SPF#2

LICENSED PROFESSIONAL ENGINEER
Y. WIDYA
100225448
06/07/2022
PROVINCE OF ONTARIO

DIMENSIONS, SUPPORTS AND LOADINGS SPECIFIED BY FABRICATOR TO BE VERIFIED BY BUILDING DESIGNER

BEARINGS

JT	FACTORED GROSS REACTION VERT	HORZ	MAXIMUM FACTORED GROSS REACTION DOWN	HORZ	UPLIFT	INPUT BRG IN-SX	REQRD BRG IN-SX
J	1324	0	1324	0	0	5-8	1-8
Q	1461	0	1461	0	0	5-8	1-9

UNFACTORED REACTIONS

JT	1ST LCASE COMBINED	MAX./MIN. COMPONENT REACTIONS SNOW	LIVE	PERM.LIVE	WIND	DEAD	SOIL
J	950	549 / 0	0 / 0	0 / 0	0 / 0	401 / 0	0 / 0
Q	1044	623 / 0	0 / 0	0 / 0	0 / 0	421 / 0	0 / 0

BEARING MATERIAL TO BE SPF NO.2 OR BETTER AT JOINT(S) J, Q

BRACING

FOR SECTION E-G, MAX. PURLIN SPACING = 2.00 FT.
FOR OTHER SECTIONS, TOP CHORD TO BE SHEATHED OR MAX. PURLIN SPACING = 5.44 FT.
MAX. UNBRACED BOTTOM CHORD LENGTH = 10.00 FT OR RIGID CEILING DIRECTLY APPLIED.

ALL PITCH BREAKS AND PERIMETER CORNER JOINTS MUST BE LATERALLY RESTRAINED.

1 LATERAL BRACE(S) AT 1/ 2 LENGTH OF I-J, F-N, F-L.

END VERTICAL(S) MUST BE SHEATHED OR HAVE BRACES AS INDICATED IN THE MAX. UNBRACED LENGTH COLUMN OF THE TABLE BELOW

LOADING

TOTAL LOAD CASES: (4)

CHORDS

MEMB. FR-TO	MAX. FACTORED FORCE (LBS)	VERT. LOAD (PLF) FROM	TO	LC1 CSI (LC)	MAX UNBRAC LENGTH
A- B	0 / 52	-78.0	-78.0	0.15 (1)	10.00
B- C	-904 / 0	-78.0	-78.0	0.16 (1)	6.25
C- D	-1014 / 0	-78.0	-78.0	0.13 (1)	6.05
D- E	-1283 / 0	-78.0	-78.0	0.24 (1)	5.44
E- F	-779 / 0	-93.0	-93.0	0.26 (1)	2.00
F- G	-775 / 0	-93.0	-93.0	0.26 (1)	2.00
G- H	-1274 / 0	-78.0	-78.0	0.15 (1)	5.55
H- I	-945 / 0	-78.0	-78.0	0.51 (1)	5.59
J- I	-1276 / 0	0.0	0.0	0.27 (1)	5.71
Q- B	-1451 / 0	0.0	0.0	0.21 (1)	6.79
Q- P	0 / 0	-18.5	-18.5	0.05 (4)	10.00
P- O	0 / 507	-18.5	-18.5	0.12 (1)	10.00
O- N	0 / 1032	-18.5	-18.5	0.31 (4)	10.00
N- M	0 / 863	-18.5	-18.5	0.29 (4)	10.00
M- L	0 / 863	-18.5	-18.5	0.29 (4)	10.00
L- K	0 / 960	-18.5	-18.5	0.27 (4)	10.00
K- J	0 / 0	-18.5	-18.5	0.14 (4)	10.00

WEBS

MEMB. FR-TO	MAX. FACTORED FORCE (LBS)	MAX CSI (LC)
P- C	-409 / 0	0.21 (1)
C- O	0 / 1072	0.24 (1)
O- D	-924 / 0	0.47 (1)
D- N	-451 / 0	0.36 (1)
N- E	0 / 724	0.12 (1)
L- G	0 / 747	0.12 (1)
L- H	-447 / 0	0.44 (1)
K- H	-973 / 0	0.75 (1)
K- I	0 / 1414	0.32 (1)
B- P	0 / 709	0.16 (1)
N- F	-235 / 0	0.16 (1)
F- L	-249 / 0	0.17 (1)

DESIGN CRITERIA

SPECIFIED LOADS:

TOP CH.	LL	=	21.0	PSF
	DL	=	6.0	PSF
BOT CH.	LL	=	0.0	PSF
	DL	=	7.4	PSF
TOTAL LOAD		=	34.4	PSF

SPACING = 24.0 IN. C/C

LOADING IN HIGHEST FLAT SECTION BASED ON PIGGYBACK TRUSS WITH SLOPES OF 6.00/12 AND -6.00/12 AND RESPECTIVE HEEL HEIGHTS OF 0-0 AND 0-0 AND AN ADDITIONAL DEAD LOAD OF 6.0 P.S.F.

LOADING IN OTHER FLAT SECTIONS BASED ON A SLOPE OF 6.00/12 AND 6.00/12

THIS TRUSS IS DESIGNED FOR RESIDENTIAL OR SMALL BUILDING REQUIREMENTS OF PART 9, NBCC 2015

THIS DESIGN COMPLIES WITH:
- PART 9 OF BCBC 2018 , ABC 2019
- PART 9 OF OBC 2012 (2019 AMENDMENT)
- CSA 086-14
- TPIC 2014

DESIGN ASSUMPTIONS
-OVERHANG NOT TO BE ALTERED OR CUT OFF.

(55 % OF 23.0 P.S.F. G.S.L. PLUS 8.4 P.S.F. RAIN LOAD) EQUALS 21.0 P.S.F. SPECIFIED ROOF LIVE LOAD

ALLOWABLE DEFL.(LL)= L/360 (0.88")
CALCULATED VERT. DEFL.(LL) = L/ 999 (0.05")
ALLOWABLE DEFL.(TL)= L/360 (0.88")
CALCULATED VERT. DEFL.(TL) = L/ 999 (0.16")

CSI: TC=0.51/1.00 (H-I:1) , BC=0.31/1.00 (N-O:4) , WB=0.75/1.00 (H-K:1) , SSI=0.18/1.00 (E-F:1)

DOL LUMBER=1.00 NAIL=1.00 LS BEND=1.10 COMP=1.10 SHEAR=1.10 TENS= 1.10

COMPANION LIVE LOAD FACTOR = 1.00

TRUSS PLATE MANUFACTURER IS NOT RESPONSIBLE FOR QUALITY CONTROL IN THE TRUSS MANUFACTURING PLANT .

NAIL VALUES

PLATE	GRIP(DRY) (PSI) MAX	MIN	SHEAR (PLI) MAX	MIN	SECTION (PLI) MAX	MIN
MT20	650	371	1747	788	1987	1873

PLATE PLACEMENT TOL. = 0.250 inches

PLATE ROTATION TOL. = 5.0 Deg.

JSI GRIP= 0.83 (K) (INPUT = 0.90)
JSI METAL= 0.34 (B) (INPUT = 1.00)

JOB NAME	TRUSS NAME	QUANTITY	PLY	JOB DESC.	DRWG NO.
343177	H18		1	TRUSS DESC. JT 45147	E22052751

Alpha Roof Truss, Maple

Version 8.530 S Feb 23 2022 MiTek Industries, Inc. Tue Jun 7 11:59:36 2022 Page 1

ID: 01SUN7GZ3P25I3oMs5H1nyKJTP-pBaqLP30a59fNQ101cvSkdbv4hrWB8iSrZusIMz8hqL

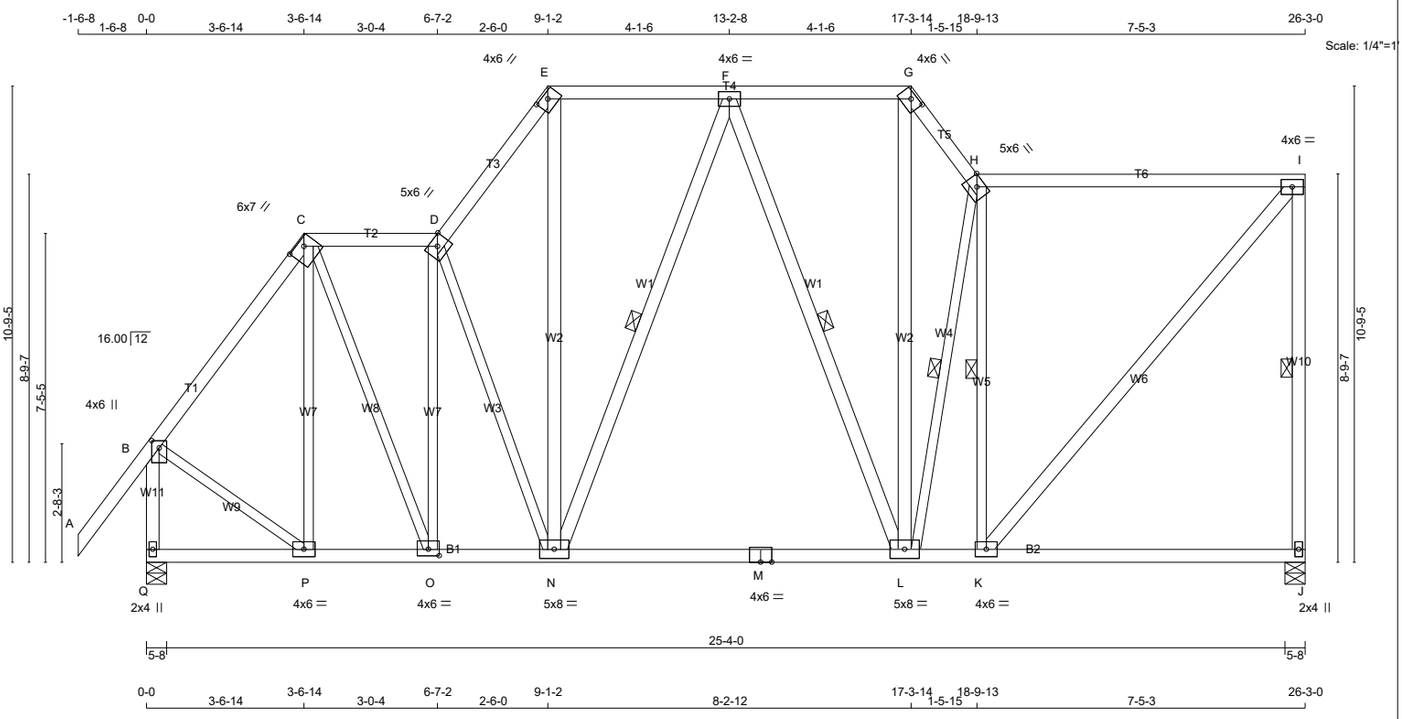

TOTAL WEIGHT = 182 lb

[M]

LUMBER

N. L. G. A. RULES

CHORDS	SIZE		LUMBER	DESCR.
A - C	2x4	DRY	No.2	SPF
C - D	2x4	DRY	No.2	SPF
D - E	2x4	DRY	No.2	SPF
E - G	2x4	DRY	No.2	SPF
G - H	2x4	DRY	No.2	SPF
H - I	2x4	DRY	2100F 1.8E	SPF
J - I	2x4	DRY	No.2	SPF
Q - B	2x4	DRY	No.2	SPF
Q - M	2x4	DRY	No.2	SPF
M - J	2x4	DRY	No.2	SPF
ALL WEBS EXCEPT	2x3	DRY	No.2	SPF
N - E	2x4	DRY	No.2	SPF
N - F	2x4	DRY	No.2	SPF
F - L	2x4	DRY	No.2	SPF
L - G	2x4	DRY	No.2	SPF
K - I	2x4	DRY	No.2	SPF

DRY: SEASONED LUMBER.

PLATES (table is in inches)

JT	TYPE	PLATES	W	LEN	Y	X
B	TMVW+p	MT20	4.0	6.0	2.00	2.00
C	TTWW-h	MT20	6.0	7.0	1.75	4.00
D	TTWW-h	MT20	5.0	6.0	Edge	
E	TTW-h	MT20	4.0	6.0	1.50	3.00
F	TMWW-t	MT20	4.0	6.0		
G	TTW-h	MT20	4.0	6.0	1.50	3.00
H	TTWW-h	MT20	5.0	6.0	Edge	
I	TMVW-t	MT20	4.0	6.0		
J	BMV1+p	MT20	2.0	4.0		
K	BMWW-t	MT20	4.0	6.0		
L	BMWWW-t	MT20	5.0	8.0		
M	BS-t	MT20	4.0	6.0		
N	BMWWW-t	MT20	5.0	8.0		
O	BMWW-t	MT20	4.0	6.0	1.75	3.00
P	BMWW-t	MT20	4.0	6.0		
Q	BMV1+p	MT20	2.0	4.0		

Edge - INDICATES REFERENCE CORNER OF PLATE TOUCHES EDGE OF CHORD.

LATERAL BRACE(S) SHOWN SHALL BE 2X4 SPF#2

DIMENSIONS, SUPPORTS AND LOADINGS SPECIFIED BY FABRICATOR TO BE VERIFIED BY BUILDING DESIGNER

BEARINGS

JT	FACTORED GROSS REACTION VERT	HORZ	MAXIMUM FACTORED GROSS REACTION DOWN	HORZ	UPLIFT	INPUT BRG IN-SX	REQRD BRG IN-SX
J	1328	0	1328	0	0	5-8	1-8
Q	1457	0	1457	0	0	5-8	1-9

UNFACTORED REACTIONS

JT	1ST LCASE COMBINED	MAX./MIN. COMPONENT REACTIONS SNOW	LIVE	PERM.LIVE	WIND	DEAD	SOIL
J	952	551 / 0	0 / 0	0 / 0	0 / 0	401 / 0	0 / 0
Q	1041	621 / 0	0 / 0	0 / 0	0 / 0	421 / 0	0 / 0

BEARING MATERIAL TO BE SPF NO.2 OR BETTER AT JOINT(S) J, Q

BRACING

FOR SECTION E-G, MAX. PURLIN SPACING = 2.00 FT.
FOR OTHER SECTIONS, TOP CHORD TO BE SHEATHED OR MAX. PURLIN SPACING = 5.57 FT.
MAX. UNBRACED BOTTOM CHORD LENGTH = 10.00 FT OR RIGID CEILING DIRECTLY APPLIED.

ALL PITCH BREAKS AND PERIMETER CORNER JOINTS MUST BE LATERALLY RESTRAINED.

1 LATERAL BRACE(S) AT 1/ 2 LENGTH OF I-J, F-N, F-L, H-L, H-K.

END VERTICAL(S) MUST BE SHEATHED OR HAVE BRACES AS INDICATED IN THE MAX. UNBRACED LENGTH COLUMN OF THE TABLE BELOW

LOADING

TOTAL LOAD CASES: (4)

CHORDS

MEMB. FR-TO	MAX. FACTORED FORCE (LBS)	FACTORED VERT. LOAD (PLF) FROM	TO	LC1 CSI (LC)	MAX UNBRAC LENGTH
A- B	0 / 52	-78.0	-78.0	0.15 (1)	10.00
B- C	-991 / 0	-78.0	-78.0	0.20 (1)	6.04
C- D	-921 / 0	-78.0	-78.0	0.13 (1)	6.25
D- E	-1293 / 0	-78.0	-78.0	0.11 (1)	5.57
E- F	-786 / 0	-93.0	-93.0	0.26 (1)	2.00
F- G	-778 / 0	-93.0	-93.0	0.26 (1)	2.00
G- H	-1279 / 0	-78.0	-78.0	0.05 (1)	5.66
H- I	-853 / 0	-78.0	-78.0	0.52 (1)	6.25
J- I	-1273 / 0	0.0	0.0	0.45 (1)	5.71
Q- B	-1433 / 0	0.0	0.0	0.21 (1)	6.82
Q- P	0 / 0	-18.5	-18.5	0.07 (4)	10.00
P- O	0 / 587	-18.5	-18.5	0.15 (1)	10.00
O- N	0 / 933	-18.5	-18.5	0.30 (4)	10.00
N- M	0 / 868	-18.5	-18.5	0.29 (4)	10.00
M- L	0 / 868	-18.5	-18.5	0.29 (4)	10.00
L- K	0 / 864	-18.5	-18.5	0.31 (4)	10.00
K- J	0 / 0	-18.5	-18.5	0.21 (4)	10.00

WEBS

MEMB. FR-TO	MAX. FACTORED FORCE (LBS)	MAX CSI (LC)
P- C	-275 / 0	0.27 (1)
C- O	0 / 880	0.20 (1)
O- D	-826 / 0	0.82 (1)
D- N	-452 / 0	0.52 (1)
N- E	0 / 780	0.13 (1)
N- F	-230 / 0	0.16 (1)
F- L	-253 / 0	0.18 (1)
L- G	0 / 808	0.13 (1)
L- H	-506 / 0	0.26 (1)
K- H	-880 / 0	0.44 (1)
K- I	0 / 1306	0.21 (1)
B- P	0 / 696	0.16 (1)

DESIGN CRITERIA

SPECIFIED LOADS:

TOP CH.	LL	=	21.0	PSF
	DL	=	6.0	PSF
BOT CH.	LL	=	0.0	PSF
	DL	=	7.4	PSF
TOTAL LOAD		=	34.4	PSF

SPACING = 24.0 IN. C/C

LOADING IN HIGHEST FLAT SECTION BASED ON PIGGYBACK TRUSS WITH SLOPES OF 6.00/12 AND -6.00/12 AND RESPECTIVE HEEL HEIGHTS OF 0-0 AND 0-0 AND AN ADDITIONAL DEAD LOAD OF 6.0 P.S.F.

LOADING IN OTHER FLAT SECTIONS BASED ON A SLOPE OF 6.00/12 AND 6.00/12

THIS TRUSS IS DESIGNED FOR RESIDENTIAL OR SMALL BUILDING REQUIREMENTS OF PART 9, NBCC 2015

THIS DESIGN COMPLIES WITH:
- PART 9 OF BCBC 2018 , ABC 2019
- PART 9 OF OBC 2012 (2019 AMENDMENT)
- CSA 086-14
- TPIC 2014

(55 % OF 23.0 P.S.F. G.S.L. PLUS 8.4 P.S.F. RAIN LOAD) EQUALS 21.0 P.S.F. SPECIFIED ROOF LIVE LOAD

ALLOWABLE DEFL.(LL)= L/360 (0.88")
CALCULATED VERT. DEFL.(LL) = L/ 999 (0.05")
ALLOWABLE DEFL.(TL)= L/360 (0.88")
CALCULATED VERT. DEFL.(TL) = L/ 999 (0.16")

CSI: TC=0.52/1.00 (H-I:1) , BC=0.31/1.00 (K-L:4) , WB=0.82/1.00 (D-O:1) , SSI=0.23/1.00 (H-I:1)

DOL LUMBER=1.00 NAIL=1.00 LS BEND=1.10 COMP=1.10 SHEAR=1.10 TENS= 1.10

COMPANION LIVE LOAD FACTOR = 1.00

TRUSS PLATE MANUFACTURER IS NOT RESPONSIBLE FOR QUALITY CONTROL IN THE TRUSS MANUFACTURING PLANT .

NAIL VALUES

PLATE	GRIP(DRY) (PSI) MAX	MIN	SHEAR (PLI) MAX	MIN	SECTION (PLI) MAX	MIN
MT20	650	371	1747	788	1987	1873

PLATE PLACEMENT TOL. = 0.250 inches

PLATE ROTATION TOL. = 5.0 Deg.

JSI GRIP= 0.90 (O) (INPUT = 0.90)
JSI METAL= 0.38 (B) (INPUT = 1.00)

JOB NAME	TRUSS NAME	QUANTITY	PLY	JOB DESC.	DRWG NO.
343177	H19		1	TRUSS DESC. JT 45147	E22052752

Alpha Roof Truss, Maple

Version 8.530 S Feb 23 2022 MiTek Industries, Inc. Tue Jun 7 11:59:37 2022 Page 1

ID: 01SUN7GZ3P25I3oMs5H1nyKJTP-HN8CYl4eLPHW?acCbJQhHq81q5CTwfJc4DeQloz8hdK

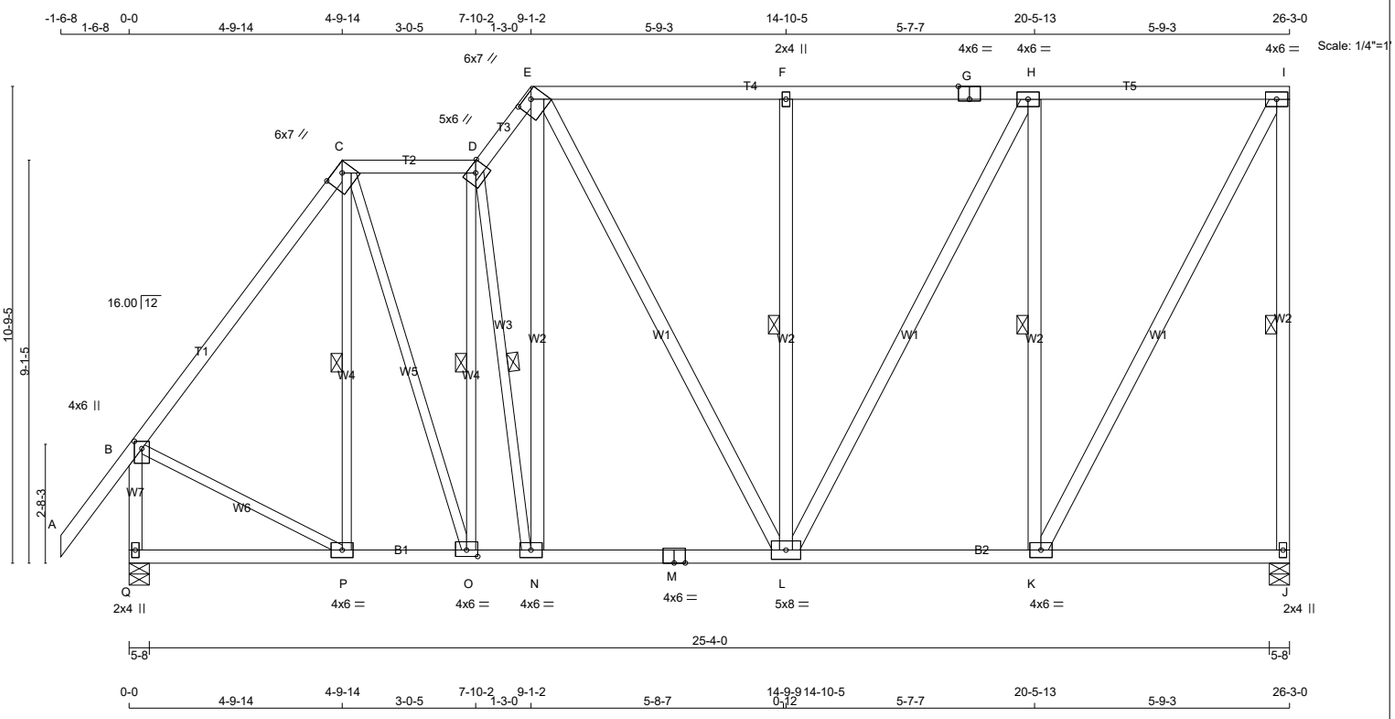

TOTAL WEIGHT = 189 lb

[M]

LUMBER

N. L. G. A. RULES

CHORDS	SIZE		LUMBER	DESCR.
A - C	2x4	DRY	No.2	SPF
C - D	2x4	DRY	No.2	SPF
D - E	2x4	DRY	No.2	SPF
E - G	2x4	DRY	No.2	SPF
G - I	2x4	DRY	No.2	SPF
J - I	2x4	DRY	No.2	SPF
Q - B	2x4	DRY	No.2	SPF
Q - M	2x4	DRY	No.2	SPF
M - J	2x4	DRY	No.2	SPF
ALL WEBS	2x4	DRY	No.2	SPF
EXCEPT				
P - C	2x3	DRY	No.2	SPF
C - O	2x3	DRY	No.2	SPF
O - D	2x3	DRY	No.2	SPF
D - N	2x3	DRY	No.2	SPF
B - P	2x3	DRY	No.2	SPF

DRY: SEASONED LUMBER.

PLATES (table is in inches)

JT	TYPE	PLATES	W	LEN	Y	X
B	TMVW+p	MT20	4.0	6.0	2.00	2.00
C	TTWW-h	MT20	6.0	7.0	2.00	4.25
D	TTWW-h	MT20	5.0	6.0	Edge	
E	TTWW-h	MT20	6.0	7.0	1.50	3.75
F	TMW+w	MT20	2.0	4.0		
G	TS-t	MT20	4.0	6.0	Edge	3.00
H	TMWW-t	MT20	4.0	6.0		
I	TMVW-t	MT20	4.0	6.0		
J	BMV1+p	MT20	2.0	4.0		
K, N, P						
K	BMWW-t	MT20	4.0	6.0		
L	BMWWW-t	MT20	5.0	8.0		
M	BS-t	MT20	4.0	6.0		
O	BMWW-t	MT20	4.0	6.0	1.75	3.00
Q	BMV1+p	MT20	2.0	4.0		

Edge - INDICATES REFERENCE CORNER OF PLATE TOUCHES EDGE OF CHORD.

LATERAL BRACE(S) SHOWN SHALL BE 2X4 SPF#2

DIMENSIONS, SUPPORTS AND LOADINGS SPECIFIED BY FABRICATOR TO BE VERIFIED BY BUILDING DESIGNER

BEARINGS

JT	FACTORED GROSS REACTION VERT	HORZ	MAXIMUM FACTORED GROSS REACTION DOWN	HORZ	UPLIFT	INPUT BRG IN-SX	REQRD BRG IN-SX
J	1266	0	1266	0	0	5-8	1-8
Q	1395	0	1395	0	0	5-8	1-8

UNFACTORED REACTIONS

JT	1ST LCASE COMBINED	MAX./MIN. COMPONENT REACTIONS SNOW	LIVE	PERM.LIVE	WIND	DEAD	SOIL
J	903	551 / 0	0 / 0	0 / 0	0 / 0	352 / 0	0 / 0
Q	992	621 / 0	0 / 0	0 / 0	0 / 0	372 / 0	0 / 0

BEARING MATERIAL TO BE SPF NO.2 OR BETTER AT JOINT(S) J, Q

BRACING

TOP CHORD TO BE SHEATHED OR MAX. PURLIN SPACING = 5.82 FT.
MAX. UNBRACED BOTTOM CHORD LENGTH = 10.00 FT OR RIGID CEILING DIRECTLY APPLIED.

ALL PITCH BREAKS AND PERIMETER CORNER JOINTS MUST BE LATERALLY RESTRAINED.

1 LATERAL BRACE(S) AT 1/ 2 LENGTH OF I-J, C-P, D-O, D-N, F-L, H-K.

END VERTICAL(S) MUST BE SHEATHED OR HAVE BRACES AS INDICATED IN THE MAX. UNBRACED LENGTH COLUMN OF THE TABLE BELOW

LOADING

TOTAL LOAD CASES: (4)

CHORDS

MEMB. FR-TO	MAX. FACTORED FORCE (LBS)	FACTORED VERT. LOAD (PLF) FROM	TO	LC1	MAX CSI (LC)	MAX. UNBRAC LENGTH
A- B	0 / 52	-78.0	-78.0	0.15 (1)	10.00	
B- C	-965 / 0	-78.0	-78.0	0.38 (1)	5.87	
C- D	-784 / 0	-78.0	-78.0	0.13 (1)	6.25	
D- E	-1195 / 0	-78.0	-78.0	0.04 (1)	5.82	
E- F	-806 / 0	-78.0	-78.0	0.36 (1)	6.23	
F- G	-806 / 0	-78.0	-78.0	0.37 (1)	6.21	
G- H	-806 / 0	-78.0	-78.0	0.37 (1)	6.21	
H- I	-573 / 0	-78.0	-78.0	0.36 (1)	6.25	
J- I	-1223 / 0	0.0	0.0	0.72 (1)	5.80	
Q- B	-1360 / 0	0.0	0.0	0.20 (1)	6.96	
Q- P	0 / 0	-18.5	-18.5	0.10 (4)	10.00	
P- O	0 / 575	-18.5	-18.5	0.16 (1)	10.00	
O- N	0 / 792	-18.5	-18.5	0.17 (1)	10.00	
N- M	0 / 725	-18.5	-18.5	0.18 (4)	10.00	
M- L	0 / 725	-18.5	-18.5	0.18 (4)	10.00	
L- K	0 / 573	-18.5	-18.5	0.20 (4)	10.00	
K- J	0 / 0	-18.5	-18.5	0.14 (4)	10.00	

WEBS

MEMB. FR-TO	MAX. FACTORED FORCE (LBS)	MAX CSI (LC)
P- C	-161 / 6	0.09 (1)
C- O	0 / 663	0.15 (1)
O- D	-651 / 0	0.35 (1)
D- N	-477 / 0	0.27 (1)
N- E	0 / 570	0.09 (1)
B- P	0 / 636	0.14 (1)
E- L	0 / 169	0.03 (1)
L- F	-479 / 0	0.28 (1)
L- H	0 / 494	0.08 (1)
K- H	-923 / 0	0.54 (1)
K- I	0 / 1189	0.19 (1)

DESIGN CRITERIA

SPECIFIED LOADS:

TOP CH.	LL	=	21.0	PSF
	DL	=	6.0	PSF
BOT CH.	LL	=	0.0	PSF
	DL	=	7.4	PSF
TOTAL LOAD		=	34.4	PSF

SPACING = 24.0 IN. C/C

LOADING IN ALL FLAT SECTIONS BASED ON A SLOPE OF 2.00/12 MINIMUM

THIS TRUSS IS DESIGNED FOR RESIDENTIAL OR SMALL BUILDING REQUIREMENTS OF PART 9, NBCC 2015

THIS DESIGN COMPLIES WITH:
- PART 9 OF BCBC 2018 , ABC 2019
- PART 9 OF OBC 2012 (2019 AMENDMENT)
- CSA 086-14
- TPIC 2014

(55 % OF 23.0 P.S.F. G.S.L. PLUS 8.4 P.S.F. RAIN LOAD) EQUALS 21.0 P.S.F. SPECIFIED ROOF LIVE LOAD

ALLOWABLE DEFL.(LL)= L/360 (0.88")
CALCULATED VERT. DEFL.(LL) = L/ 999 (0.04")
ALLOWABLE DEFL.(TL)= L/360 (0.88")
CALCULATED VERT. DEFL.(TL) = L/ 999 (0.09")

CSI: TC=0.72/1.00 (I-J:1) , BC=0.20/1.00 (K-L:4) , WB=0.54/1.00 (H-K:1) , SSI=0.21/1.00 (H-I:1)

DOL LUMBER=1.00 NAIL=1.00 LS BEND=1.10 COMP=1.10 SHEAR=1.10 TENS= 1.10

COMPANION LIVE LOAD FACTOR = 1.00

TRUSS PLATE MANUFACTURER IS NOT RESPONSIBLE FOR QUALITY CONTROL IN THE TRUSS MANUFACTURING PLANT .

NAIL VALUES

PLATE	GRIP(DRY) (PSI) MAX	MIN	SHEAR (PLI) MAX	MIN	SECTION (PLI) MAX	MIN
MT20	650	371	1747	788	1987	1873

PLATE PLACEMENT TOL. = 0.250 inches

PLATE ROTATION TOL. = 5.0 Deg.

JSI GRIP= 0.89 (K) (INPUT = 0.90)
JSI METAL= 0.38 (B) (INPUT = 1.00)

JOB NAME	TRUSS NAME	QUANTITY	PLY	JOB DESC.	DRWG NO.
343177	H20		1	TRUSS DESC. JT 45147	E22052753

Alpha Roof Truss, Maple

Version 8.530 S Feb 23 2022 MiTek Industries, Inc. Tue Jun 7 11:59:39 2022 Page 1

ID: 01SUN7GZ3P25I3oMs5H1nyKJTP-EmGzzR6ut0XDEumbikT9MFDN5us?ObwvXX7WMhz8hqI

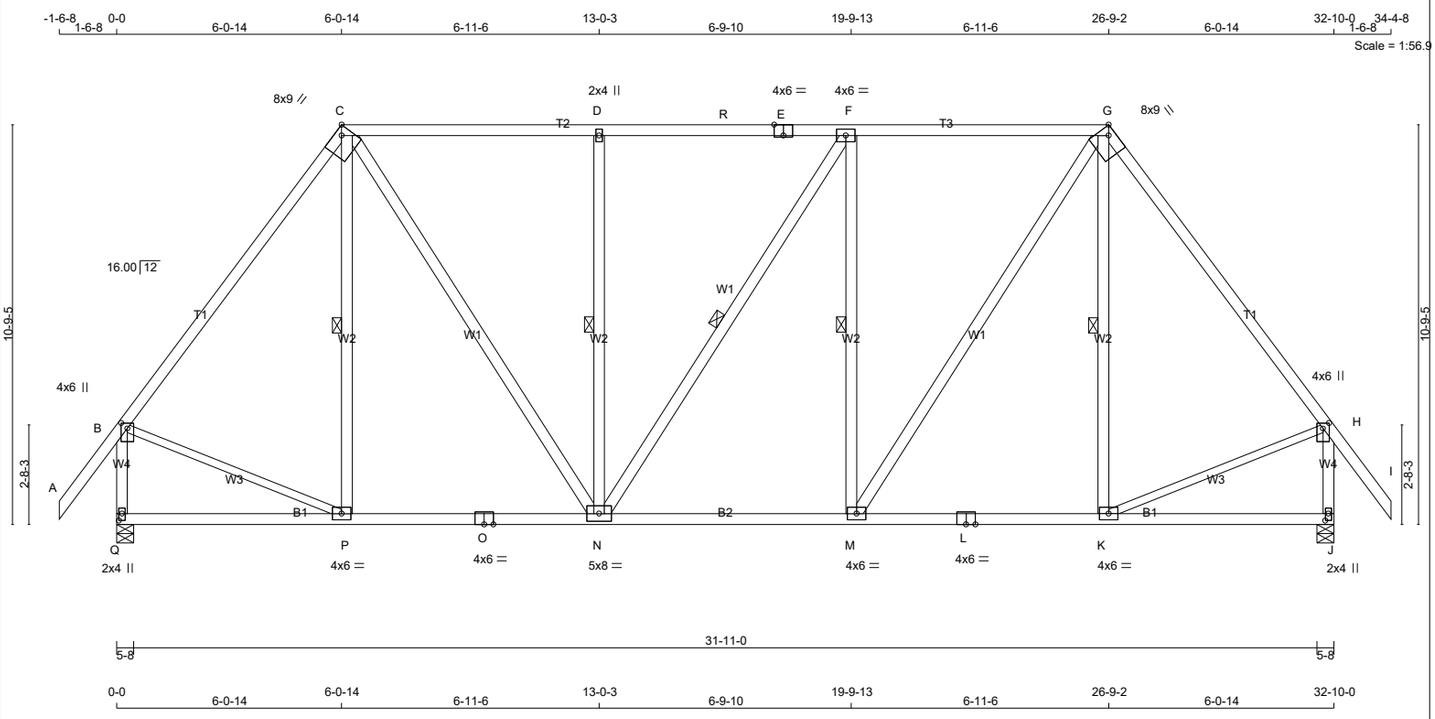

TOTAL WEIGHT = 6 X 194 = 1165 lb

[M]

LUMBER

N. L. G. A. RULES

CHORDS	SIZE		LUMBER	DESCR.
A - C	2x4	DRY	2100F 1.8E	SPF
C - E	2x4	DRY	No.2	SPF
E - G	2x4	DRY	No.2	SPF
G - I	2x4	DRY	2100F 1.8E	SPF
Q - B	2x4	DRY	No.2	SPF
J - H	2x4	DRY	No.2	SPF
Q - O	2x4	DRY	No.2	SPF
O - L	2x4	DRY	No.2	SPF
L - J	2x4	DRY	No.2	SPF
ALL WEBS	2x4	DRY	No.2	SPF
EXCEPT				
B - P	2x3	DRY	No.2	SPF
K - H	2x3	DRY	No.2	SPF

DRY: SEASONED LUMBER.

PLATES (table is in inches)

JT	TYPE	PLATES	W	LEN	Y	X
B	TMVW+p	MT20	4.0	6.0	1.75	2.00
C	TTWW-h	MT20	8.0	9.0	Edge	2.75
D	TMW+w	MT20	2.0	4.0		
E	TS-t	MT20	4.0	6.0	Edge	3.00
F	TMWW-t	MT20	4.0	6.0		
G	TTWW-h	MT20	8.0	9.0	Edge	2.75
H	TMVW+p	MT20	4.0	6.0	1.75	2.00
J	BMV1+p	MT20	2.0	4.0	2.25	1.00
K, M, P						
K	BMWW-t	MT20	4.0	6.0		
L	BS-t	MT20	4.0	6.0		
N	BMWWW-t	MT20	5.0	8.0		
O	BS-t	MT20	4.0	6.0		
Q	BMV1+p	MT20	2.0	4.0	2.25	1.00

Edge - INDICATES REFERENCE CORNER OF PLATE TOUCHES EDGE OF CHORD.

LATERAL BRACE(S) SHOWN SHALL BE 2X4 SPF#2

DIMENSIONS, SUPPORTS AND LOADINGS SPECIFIED BY FABRICATOR TO BE VERIFIED BY BUILDING DESIGNER

BEARINGS

JT	FACTORED GROSS REACTION VERT	HORZ	MAXIMUM FACTORED GROSS REACTION DOWN	HORZ	UPLIFT	INPUT BRG IN-SX	REQRD BRG IN-SX
Q	1868	0	1868	0	0	5-8	2-9
J	1868	0	1868	0	0	5-8	2-9

UNFACTORED REACTIONS

JT	1ST LCASE COMBINED	MAX./MIN. COMPONENT REACTIONS SNOW	LIVE	PERM.LIVE	WIND	DEAD	SOIL
Q	1343	759 / 0	0 / 0	0 / 0	0 / 0	584 / 0	0 / 0
J	1343	759 / 0	0 / 0	0 / 0	0 / 0	584 / 0	0 / 0

BEARING MATERIAL TO BE SPF NO.2 OR BETTER AT JOINT(S) Q, J

BRACING

FOR SECTION C-G, MAX. PURLIN SPACING = 2.00 FT.
FOR OTHER SECTIONS, TOP CHORD TO BE SHEATHED OR MAX. PURLIN SPACING = 5.99 FT.
MAX. UNBRACED BOTTOM CHORD LENGTH = 10.00 FT OR RIGID CEILING DIRECTLY APPLIED.

ALL PITCH BREAKS AND PERIMETER CORNER JOINTS MUST BE LATERALLY RESTRAINED.

1 LATERAL BRACE(S) AT 1/ 2 LENGTH OF C-P, G-K, D-N, F-N, F-M.

END VERTICAL(S) MUST BE SHEATHED OR HAVE BRACES AS INDICATED IN THE MAX. UNBRACED LENGTH COLUMN OF THE TABLE BELOW

LOADING

TOTAL LOAD CASES: (4)

CHORDS

MEMB. FR-TO	MAX. FACTORED FORCE (LBS)	FROM (PLF)	TO (PLF)	CSI (LC)	MAX UNBRAC LENGTH
A- B	0 / 52	-78.0	-78.0	0.10 (1)	10.00
B- C	-1426 / 0	-78.0	-78.0	0.44 (1)	5.99
C- D	-1391 / 0	-93.0	-93.0	0.72 (1)	2.00
D- R	-1392 / 0	-93.0	-93.0	0.72 (1)	2.00
R- E	-1392 / 0	-93.0	-93.0	0.72 (1)	2.00
E- F	-1392 / 0	-93.0	-93.0	0.72 (1)	2.00
F- G	-1392 / 0	-93.0	-93.0	0.72 (1)	2.00
G- H	-1426 / 0	-78.0	-78.0	0.44 (1)	5.99
H- I	0 / 52	-78.0	-78.0	0.10 (1)	10.00
Q- B	-1824 / 0	0.0	0.0	0.26 (1)	6.20
J- H	-1823 / 0	0.0	0.0	0.26 (1)	6.20
Q- P	0 / 0	-18.5	-18.5	0.19 (4)	10.00
P- O	0 / 850	-18.5	-18.5	0.29 (4)	10.00
O- N	0 / 850	-18.5	-18.5	0.29 (4)	10.00
N- M	0 / 1393	-18.5	-18.5	0.32 (4)	10.00
M- L	0 / 850	-18.5	-18.5	0.29 (4)	10.00
L- K	0 / 850	-18.5	-18.5	0.29 (4)	10.00
K- J	0 / 0	-18.5	-18.5	0.19 (4)	10.00

WEBS

MEMB. FR-TO	MAX. FACTORED FORCE (LBS)	MAX CSI (LC)
P- C	-178 / 3	0.11 (1)
K- G	-179 / 3	0.11 (1)
B- P	0 / 908	0.20 (1)
K- H	0 / 908	0.20 (1)
C- N	0 / 978	0.16 (1)
N- D	-691 / 0	0.41 (1)
N- F	-2 / 0	0.00 (1)
M- F	-691 / 0	0.41 (1)
M- G	0 / 980	0.16 (1)

DESIGN CRITERIA

SPECIFIED LOADS:

TOP CH.	LL	=	21.0	PSF
	DL	=	6.0	PSF
BOT CH.	LL	=	0.0	PSF
	DL	=	7.4	PSF
TOTAL LOAD		=	34.4	PSF

SPACING = 24.0 IN. C/C

LOADING IN FLAT SECTION BASED ON PIGGYBACK TRUSS WITH SLOPES OF 6.00/12 AND -6.00/12 AND RESPECTIVE HEEL HEIGHTS OF 0-0 AND 0-0 AND AN ADDITIONAL DEAD LOAD OF 6.0 P.S.F.

THIS TRUSS IS DESIGNED FOR RESIDENTIAL OR SMALL BUILDING REQUIREMENTS OF PART 9, NBCC 2015

THIS DESIGN COMPLIES WITH:
- PART 9 OF BCBC 2018 , ABC 2019
- PART 9 OF OBC 2012 (2019 AMENDMENT)
- CSA 086-14
- TPIC 2014

(55 % OF 23.0 P.S.F. G.S.L. PLUS 8.4 P.S.F. RAIN LOAD) EQUALS 21.0 P.S.F. SPECIFIED ROOF LIVE LOAD

ALLOWABLE DEFL.(LL)= L/360 (1.09")
CALCULATED VERT. DEFL.(LL) = L/ 999 (0.04")
ALLOWABLE DEFL.(TL)= L/360 (1.09")
CALCULATED VERT. DEFL.(TL) = L/ 999 (0.12")

CSI: TC=0.72/1.00 (F-G:1) , BC=0.32/1.00 (M-N:4) , WB=0.41/1.00 (F-M:1) , SSI=0.30/1.00 (F-G:1)

DOL LUMBER=1.00 NAIL=1.00 LS BEND=1.10 COMP=1.10 SHEAR=1.10 TENS= 1.10

COMPANION LIVE LOAD FACTOR = 1.00

AUTOSOLVE HEELS OFF

TRUSS PLATE MANUFACTURER IS NOT RESPONSIBLE FOR QUALITY CONTROL IN THE TRUSS MANUFACTURING PLANT .

NAIL VALUES

PLATE	GRIP(DRY) (PSI) MAX	MIN	SHEAR (PLI) MAX	MIN	SECTION (PLI) MAX	MIN
MT20	650	371	1747	788	1987	1873

PLATE PLACEMENT TOL. = 0.250 inches

PLATE ROTATION TOL. = 5.0 Deg.

JSI GRIP= 0.90 (B) (INPUT = 0.90)
JSI METAL= 0.57 (B) (INPUT = 1.00)

JOB NAME	TRUSS NAME	QUANTITY	PLY	JOB DESC.	DRWG NO.
343177	H21P		1	TRUSS DESC. JT 45147	E22052754

Alpha Roof Truss, Maple

Version 8.530 S Feb 23 2022 MiTek Industries, Inc. Tue Jun 7 11:59:40 2022 Page 1

ID: 01SUN7GZ3P25I3oMs5H1nyKJTP-iyqLAn7WeKf4s1LnGS OuTmd5IFB77O2mBs4u7z8hqH

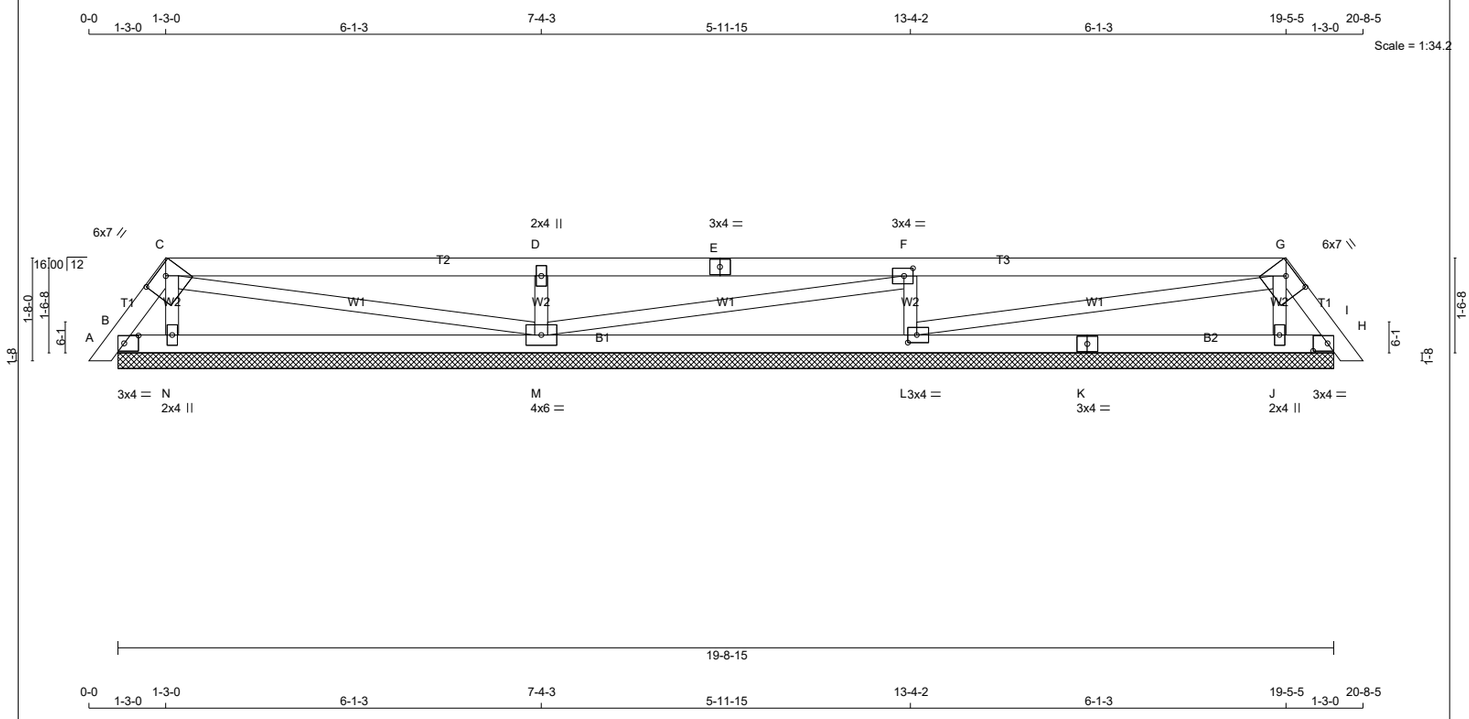

TOTAL WEIGHT = 2 X 65 = 131 lb [M]

LUMBER

N. L. G. A. RULES

CHORDS	SIZE		LUMBER	DESCR.
A - C	2x4	DRY	No.2	SPF
C - E	2x4	DRY	No.2	SPF
E - G	2x4	DRY	No.2	SPF
G - I	2x4	DRY	No.2	SPF
B - K	2x4	DRY	No.2	SPF
K - H	2x4	DRY	No.2	SPF
ALL WEBS	2x3	DRY	No.2	SPF

DRY: SEASONED LUMBER.

PLATES (table is in inches)

JT	TYPE	PLATES	W	LEN	Y	X
B	TMB1-l	MT20	3.0	4.0	1.50	2.75
C	TTWW-h	MT20	6.0	7.0	1.75	4.00
D	TMW+w	MT20	2.0	4.0		
E	TS-t	MT20	3.0	4.0		
F	TMWW-t	MT20	3.0	4.0	1.50	1.75
G	TTWW-h	MT20	6.0	7.0	1.75	4.00
H	TMB1-l	MT20	3.0	4.0	1.50	2.75
J	BMW1+w	MT20	2.0	4.0		
K	BS-t	MT20	3.0	4.0		
L	BMWW1-t	MT20	3.0	4.0	1.50	1.75
M	BMWWW1-t	MT20	4.0	6.0		
N	BMW1+w	MT20	2.0	4.0		

LATERAL BRACE(S) SHOWN SHALL BE 2X4 SPF#2

DIMENSIONS, SUPPORTS AND LOADINGS SPECIFIED BY FABRICATOR TO BE VERIFIED BY BUILDING DESIGNER

BEARINGS

JT	FACTORED GROSS REACTION VERT	HORZ	MAXIMUM FACTORED GROSS REACTION DOWN	HORZ	UPLIFT	INPUT BRG IN-SX	REQRD BRG IN-SX
B	63	0	63	0	-28	19-8-15 (4-0-0)	1-0-8
N	283	0	283	0	0	19-8-15 (4-0-0)	1-0-8
M	636	0	636	0	0	19-8-15 (4-0-0)	1-0-8
L	630	0	630	0	0	19-8-15 (4-0-0)	1-0-8
J	278	0	278	0	0	19-8-15 (4-0-0)	1-0-8
H	69	0	69	0	-27	19-8-15 (4-0-0)	1-0-8

VALUE IN PARENTHESIS INDICATES EFFECTIVE BEARING LENGTH

PROVIDE ANCHORAGE AT BEARING JOINT B FOR 150 LBS FACTORED UPLIFT
PROVIDE ANCHORAGE AT BEARING JOINT H FOR 150 LBS FACTORED UPLIFT

UNFACTORED REACTIONS

JT	1ST LCASE COMBINED	MAX./MIN. COMPONENT REACTIONS SNOW	LIVE	PERM.LIVE	WIND	DEAD	SOIL
B	39	59 / 0	0 / 0	0 / 0	0 / 0	0 / -20	0 / 0
N	208	90 / 0	0 / 0	0 / 0	0 / 0	119 / 0	0 / 0
M	453	282 / 0	0 / 0	0 / 0	0 / 0	171 / 0	0 / 0
L	449	279 / 0	0 / 0	0 / 0	0 / 0	170 / 0	0 / 0
J	205	87 / 0	0 / 0	0 / 0	0 / 0	118 / 0	0 / 0
H	43	62 / 0	0 / 0	0 / 0	0 / 0	0 / -19	0 / 0

BEARING MATERIAL TO BE SPF NO.2 OR BETTER AT JOINT(S) B, N, M, L, J, H

BRACING

TOP CHORD TO BE SHEATHED OR MAX. PURLIN SPACING = 6.25 FT.
MAX. UNBRACED BOTTOM CHORD LENGTH = 10.00 FT OR RIGID CEILING DIRECTLY APPLIED.

ALL PITCH BREAKS AND PERIMETER CORNER JOINTS MUST BE LATERALLY RESTRAINED.

LOADING

TOTAL LOAD CASES: (4)

CHORDS

MEMB. FR-TO	MAX. FACTORED FORCE (LBS)	FACTORED VERT. LOAD LC1 (PLF) FROM	TO	MAX CSI (LC)	MAX. UNBRAC LENGTH
A- B	0 / 10	-78.0	-78.0	0.01 (1)	10.00
B- C	-61 / 0	-78.0	-78.0	0.01 (1)	6.25
C- D	-1 / 0	-78.0	-78.0	0.39 (1)	10.00
D- E	-2 / 0	-78.0	-78.0	0.39 (1)	10.00
E- F	-2 / 0	-78.0	-78.0	0.39 (1)	10.00
F- G	-12 / 0	-78.0	-78.0	0.39 (1)	6.25
G- H	-69 / 0	-78.0	-78.0	0.01 (1)	6.25
H- I	0 / 10	-78.0	-78.0	0.01 (1)	10.00
B- N	0 / 33	-18.5	-18.5	0.11 (4)	10.00
N- M	0 / 19	-18.5	-18.5	0.13 (4)	10.00
M- L	0 / 12	-18.5	-18.5	0.13 (4)	10.00
L- K	0 / 23	-18.5	-18.5	0.13 (4)	10.00
K- J	0 / 23	-18.5	-18.5	0.13 (4)	10.00
J- H	0 / 37	-18.5	-18.5	0.11 (4)	10.00

WEBS

MEMB. FR-TO	MAX. FACTORED FORCE (LBS)	MAX CSI (LC)
N- C	-167 / 0	0.02 (1)
C- M	-18 / 0	0.01 (1)
M- D	-518 / 0	0.07 (1)
M- F	-11 / 0	0.01 (1)
L- F	-516 / 0	0.07 (1)
L- G	-11 / 0	0.01 (1)
J- G	-162 / 0	0.02 (1)

DESIGN CRITERIA

SPECIFIED LOADS:

TOP CH.	LL	=	21.0	PSF
	DL	=	6.0	PSF
BOT CH.	LL	=	0.0	PSF
	DL	=	7.4	PSF
TOTAL LOAD		=	34.4	PSF

SPACING = 24.0 IN. C/C

LOADING IN FLAT SECTION BASED ON A SLOPE OF 2.00/12 MINIMUM

THIS TRUSS IS DESIGNED FOR RESIDENTIAL OR SMALL BUILDING REQUIREMENTS OF PART 9, NBCC 2015

THIS DESIGN COMPLIES WITH:
- PART 9 OF BCBC 2018 , ABC 2019
- PART 9 OF OBC 2012 (2019 AMENDMENT)
- CSA 086-14
- TPIC 2014

(55 % OF 23.0 P.S.F. G.S.L. PLUS 8.4 P.S.F. RAIN LOAD) EQUALS 21.0 P.S.F. SPECIFIED ROOF LIVE LOAD

CSI: TC=0.39/1.00 (F-G:1) , BC=0.13/1.00 (J-L:4) , WB=0.07/1.00 (D-M:1) , SSI=0.22/1.00 (F-G:1)

DOL LUMBER=1.00 NAIL=1.00 LS BEND=1.10 COMP=1.10 SHEAR=1.10 TENS= 1.10

COMPANION LIVE LOAD FACTOR = 1.00

TRUSS PLATE MANUFACTURER IS NOT RESPONSIBLE FOR QUALITY CONTROL IN THE TRUSS MANUFACTURING PLANT .

NAIL VALUES

PLATE	GRIP(DRY) (PSI) MAX	MIN	SHEAR (PLI) MAX	MIN	SECTION (PLI) MAX	MIN
MT20	650	371	1747	788	1987	1873

PLATE PLACEMENT TOL. = 0.250 inches

PLATE ROTATION TOL. = 5.0 Deg.

JSI GRIP= 0.85 (L) (INPUT = 0.90)
JSI METAL= 0.17 (E) (INPUT = 1.00)

JOB NAME	TRUSS NAME	QUANTITY	PLY	JOB DESC.		DRWG NO.
343177	H22P	.	1	TRUSS DESC.	JT 45147	E22052755

Alpa Roof Truss, Maple

Version 8.530 S Feb 23 2022 MiTek Industries, Inc. Tue Jun 7 11:59:42 2022 Page 1

ID: 01SUN7GZ3P25I3oMs5H1nyKJTP-eLx5bT8mAxvo5LVANt0s urtv6vxb0oLEVLBz0z8hqF

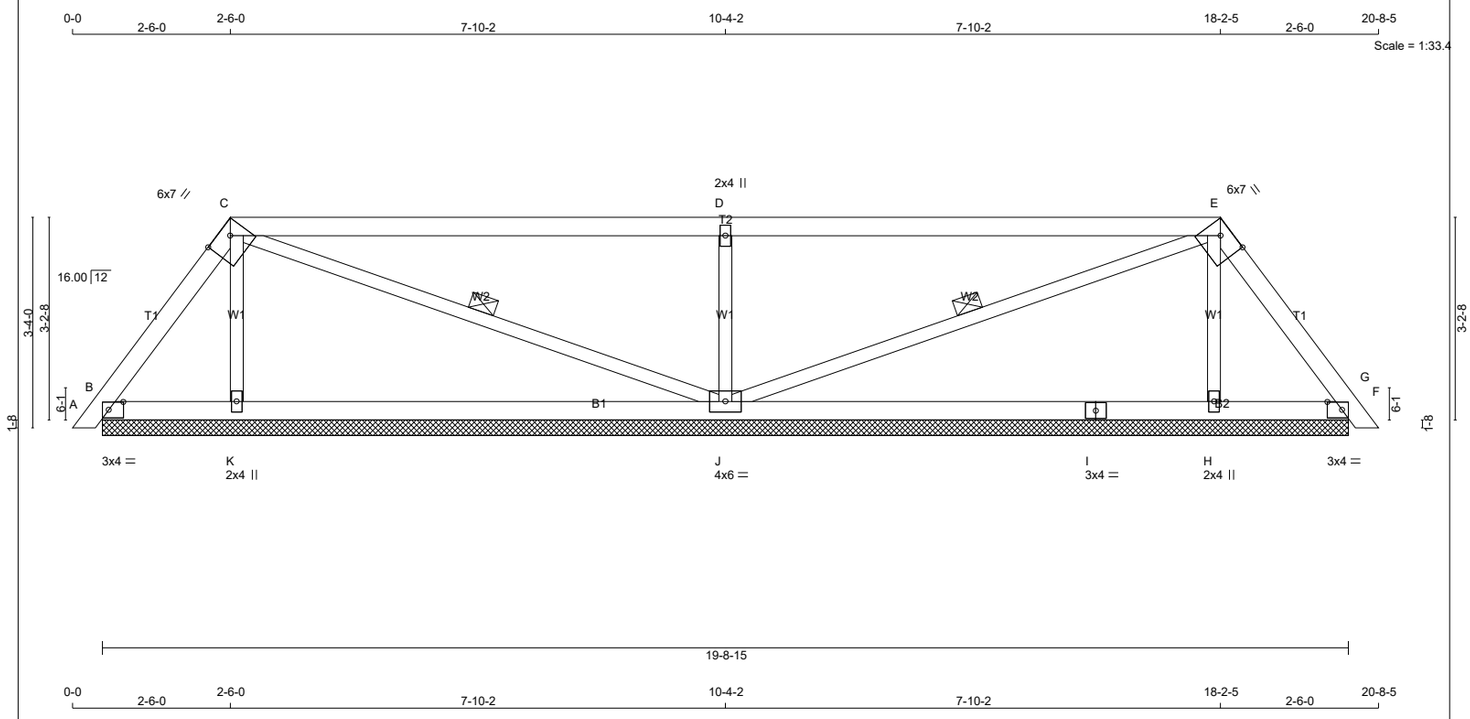

0-0 2-6-0 2-6-0 7-10-2 10-4-2 7-10-2 18-2-5 2-6-0 20-8-5

TOTAL WEIGHT = 3 X 69 = 208 lb

[M]

LUMBER

N. L. G. A. RULES

CHORDS	SIZE		LUMBER	DESCR.
A - C	2x4	DRY	No.2	SPF
C - E	2x4	DRY	No.2	SPF
E - G	2x4	DRY	No.2	SPF
B - I	2x4	DRY	No.2	SPF
I - F	2x4	DRY	No.2	SPF
ALL WEBS	2x3	DRY	No.2	SPF

DRY: SEASONED LUMBER.

PLATES (table is in inches)

JT	TYPE	PLATES	W	LEN	Y	X
B	TMB1-l	MT20	3.0	4.0	1.50	2.75
C	TTWW-h	MT20	6.0	7.0	2.00	4.25
D	TMW+w	MT20	2.0	4.0		
E	TTWW-h	MT20	6.0	7.0	2.00	4.25
F	TMB1-l	MT20	3.0	4.0	1.50	2.75
H	BMW1+w	MT20	2.0	4.0		
I	BS-t	MT20	3.0	4.0		
J	BMWWW1-t	MT20	4.0	6.0		
K	BMW1+w	MT20	2.0	4.0		

LATERAL BRACE(S) SHOWN SHALL BE 2X4 SPF#2

DIMENSIONS, SUPPORTS AND LOADINGS SPECIFIED BY FABRICATOR TO BE VERIFIED BY BUILDING DESIGNER

BEARINGS

JT	FACTORED GROSS REACTION VERT	HORZ	MAXIMUM FACTORED GROSS REACTION DOWN	HORZ	UPLIFT	INPUT BRG IN-SX	REQRD BRG IN-SX
B	174	0	174	0	0	19-8-15 (4-0-0)	1-8
K	337	0	337	0	0	19-8-15 (4-0-0)	1-8
J	939	0	939	0	0	19-8-15 (4-0-0)	1-8
H	337	0	337	0	0	19-8-15 (4-0-0)	1-8
F	174	0	174	0	0	19-8-15 (4-0-0)	1-8

VALUE IN PARENTHESIS INDICATES EFFECTIVE BEARING LENGTH

UNFACTORED REACTIONS

JT	1ST LCASE COMBINED	MAX./MIN. COMPONENT REACTIONS SNOW	LIVE	PERM.LIVE	WIND	DEAD	SOIL
B	119	101 / 0	0 / 0	0 / 0	0 / 0	18 / 0	0 / 0
K	246	117 / 0	0 / 0	0 / 0	0 / 0	129 / 0	0 / 0
J	667	424 / 0	0 / 0	0 / 0	0 / 0	243 / 0	0 / 0
H	246	117 / 0	0 / 0	0 / 0	0 / 0	129 / 0	0 / 0
F	119	101 / 0	0 / 0	0 / 0	0 / 0	18 / 0	0 / 0

BEARING MATERIAL TO BE SPF NO.2 OR BETTER AT JOINT(S) B, K, J, H, F

BRACING

TOP CHORD TO BE SHEATHED OR MAX. PURLIN SPACING = 6.25 FT.
MAX. UNBRACED BOTTOM CHORD LENGTH = 10.00 FT OR RIGID CEILING DIRECTLY APPLIED.

ALL PITCH BREAKS AND PERIMETER CORNER JOINTS MUST BE LATERALLY RESTRAINED.

1 LATERAL BRACE(S) AT 1/ 2 LENGTH OF C-J, E-J.

LOADING

TOTAL LOAD CASES: (4)

C H O R D S

MEMB. FR-TO	MAX. FACTORED FORCE (LBS)	FACTORED VERT. LOAD LC1 (PLF) FROM	TO	MAX CSI (LC)	MAX. UNBRAC LENGTH
A- B	0 / 10	-78.0	-78.0	0.01 (1)	10.00
B- C	-98 / 0	-78.0	-78.0	0.05 (1)	6.25
C- D	-16 / 0	-78.0	-78.0	0.82 (1)	6.25
D- E	-16 / 0	-78.0	-78.0	0.82 (1)	6.25
E- F	-98 / 0	-78.0	-78.0	0.05 (1)	6.25
F- G	0 / 10	-78.0	-78.0	0.01 (1)	10.00
B- K	0 / 57	-18.5	-18.5	0.17 (4)	10.00
K- J	0 / 49	-18.5	-18.5	0.24 (4)	10.00
J- I	0 / 49	-18.5	-18.5	0.24 (4)	10.00
I- H	0 / 49	-18.5	-18.5	0.24 (4)	10.00
H- F	0 / 57	-18.5	-18.5	0.17 (4)	10.00

W E B S

MEMB. FR-TO	MAX. FACTORED FORCE (LBS)	MAX CSI (LC)
K- C	-217 / 0	0.04 (1)
C- J	-34 / 0	0.02 (1)
J- D	-764 / 0	0.14 (1)
J- E	-34 / 0	0.02 (1)
H- E	-217 / 0	0.04 (1)

DESIGN CRITERIA

SPECIFIED LOADS:

TOP CH.	LL	=	21.0	PSF
	DL	=	6.0	PSF
BOT CH.	LL	=	0.0	PSF
	DL	=	7.4	PSF
TOTAL LOAD		=	34.4	PSF

SPACING = 24.0 IN. C/C

LOADING IN FLAT SECTION BASED ON A SLOPE OF 2.00/12 MINIMUM

THIS TRUSS IS DESIGNED FOR RESIDENTIAL OR SMALL BUILDING REQUIREMENTS OF PART 9, NBCC 2015

THIS DESIGN COMPLIES WITH:
- PART 9 OF BCBC 2018 , ABC 2019
- PART 9 OF OBC 2012 (2019 AMENDMENT)
- CSA 086-14
- TPIC 2014

(55 % OF 23.0 P.S.F. G.S.L. PLUS 8.4 P.S.F. RAIN LOAD) EQUALS 21.0 P.S.F. SPECIFIED ROOF LIVE LOAD

CSI: TC=0.82/1.00 (C-D:1) , BC=0.24/1.00 (J-K:4) , WB=0.14/1.00 (D-J:1) , SSI=0.30/1.00 (C-D:1)

DOL LUMBER=1.00 NAIL=1.00 LS BEND=1.10 COMP=1.10 SHEAR=1.10 TENS= 1.10

COMPANION LIVE LOAD FACTOR = 1.00

TRUSS PLATE MANUFACTURER IS NOT RESPONSIBLE FOR QUALITY CONTROL IN THE TRUSS MANUFACTURING PLANT .

NAIL VALUES

PLATE	GRIP(DRY) (PSI) MAX	MIN	SHEAR (PLI) MAX	MIN	SECTION (PLI) MAX	MIN
MT20	650	371	1747	788	1987	1873

PLATE PLACEMENT TOL. = 0.250 inches

PLATE ROTATION TOL. = 5.0 Deg.

JSI GRIP= 0.88 (J) (INPUT = 0.90)
JSI METAL= 0.16 (D) (INPUT = 1.00)

JOB NAME	TRUSS NAME	QUANTITY	PLY	JOB DESC.	DRWG NO.
343177	H23	.	1	TRUSS DESC. JT 45147	E22052756

Alpa Roof Truss, Maple

Version 8.530 S Feb 23 2022 MiTek Industries, Inc. Tue Jun 7 11:59:43 2022 Page 1

ID: 01SUN7GZ3P25I3oMs5H1nyKJTP-6XVTpp9PxF1fjV3MxaX5W5OCeVHqKVVUS95kVSz8hqE

Scale = 1:26.8

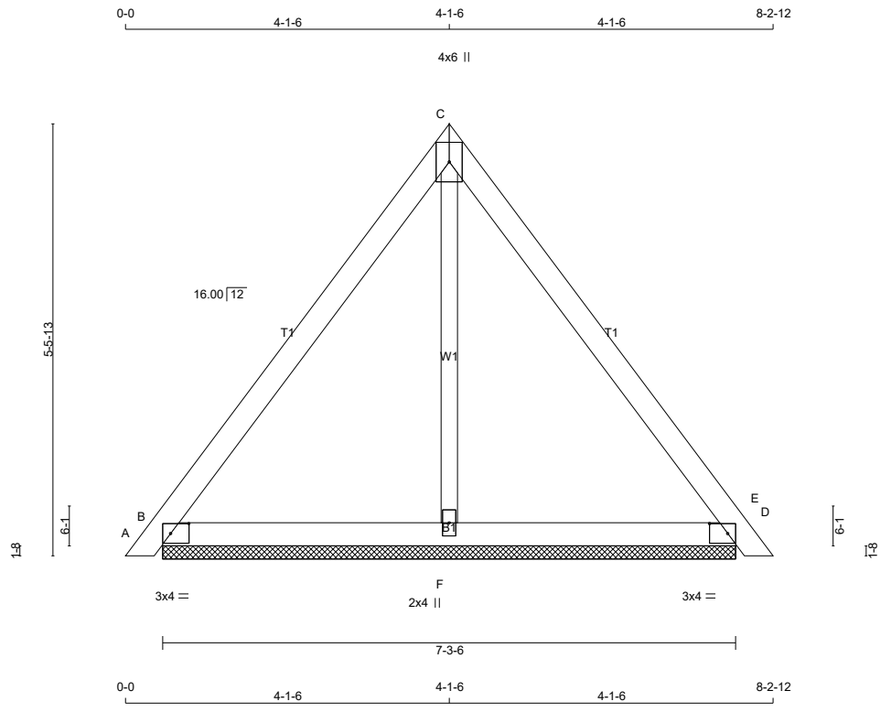

TOTAL WEIGHT = 4 X 28 = 111 lb

[M]

LUMBER

N. L. G. A. RULES

CHORDS	SIZE		LUMBER	DESCR.
A - C	2x4	DRY	No.2	SPF
C - E	2x4	DRY	No.2	SPF
B - D	2x4	DRY	No.2	SPF
ALL WEBS	2x3	DRY	No.2	SPF

DRY: SEASONED LUMBER.

PLATES (table is in inches)

JT	TYPE	PLATES	W	LEN	Y	X
B	TMB1-l	MT20	3.0	4.0	1.50	2.75
C	TTW+p	MT20	4.0	6.0		
D	TMB1-l	MT20	3.0	4.0	1.50	2.75
F	BMW1+w	MT20	2.0	4.0		

LATERAL BRACE(S) SHOWN SHALL BE 2X4 SPF#2

DIMENSIONS, SUPPORTS AND LOADINGS SPECIFIED BY FABRICATOR TO BE VERIFIED BY BUILDING DESIGNER

BEARINGS

JT	FACTORED GROSS REACTION VERT	HORZ	MAXIMUM FACTORED GROSS REACTION DOWN	HORZ	UPLIFT	INPUT BRG IN-SX	REQRD BRG IN-SX
B	273	0	273	0	0	7-3-6	1-8
D	273	0	273	0	0	7-3-6	1-8
F	212	0	212	0	0	7-3-6	1-8

UNFACTORED REACTIONS

JT	1ST LCASE COMBINED	MAX./MIN. COMPONENT REACTIONS SNOW	LIVE	PERM.LIVE	WIND	DEAD	SOIL
B	192	133 / 0	0 / 0	0 / 0	0 / 0	58 / 0	0 / 0
D	192	133 / 0	0 / 0	0 / 0	0 / 0	58 / 0	0 / 0
F	156	69 / 0	0 / 0	0 / 0	0 / 0	87 / 0	0 / 0

BEARING MATERIAL TO BE SPF NO.2 OR BETTER AT JOINT(S) B, D, F

BRACING

TOP CHORD TO BE SHEATHED OR MAX. PURLIN SPACING = 6.25 FT.
MAX. UNBRACED BOTTOM CHORD LENGTH = 10.00 FT OR RIGID CEILING DIRECTLY APPLIED.

ALL PITCH BREAKS AND PERIMETER CORNER JOINTS MUST BE LATERALLY RESTRAINED.

LOADING

TOTAL LOAD CASES: (4)

CHORDS

MEMB. FR-TO	MAX. FACTORED FORCE (LBS)	FACTORED VERT. LOAD LC1 (PLF) FROM	TO	MAX CSI (LC)	MAX. UNBRAC LENGTH
A- B	0 / 10	-78.0	-78.0	0.01 (1)	10.00
B- C	-97 / 0	-78.0	-78.0	0.18 (1)	6.25
C- D	-97 / 0	-78.0	-78.0	0.18 (1)	6.25
D- E	0 / 10	-78.0	-78.0	0.01 (1)	10.00
B- F	0 / 57	-18.5	-18.5	0.07 (4)	10.00
F- D	0 / 57	-18.5	-18.5	0.07 (4)	10.00

WEBS

MEMB. FR-TO	MAX. FACTORED FORCE (LBS)	MAX CSI (LC)
F- C	-128 / 0	0.05 (1)

DESIGN CRITERIA

SPECIFIED LOADS:

TOP CH.	LL	=	21.0	PSF
	DL	=	6.0	PSF
BOT CH.	LL	=	0.0	PSF
	DL	=	7.4	PSF
TOTAL LOAD		=	34.4	PSF

SPACING = 24.0 IN. C/C

THIS TRUSS IS DESIGNED FOR RESIDENTIAL OR SMALL BUILDING REQUIREMENTS OF PART 9, NBCC 2015

THIS DESIGN COMPLIES WITH:
- PART 9 OF BCBC 2018 , ABC 2019
- PART 9 OF OBC 2012 (2019 AMENDMENT)
- CSA 086-14
- TPIC 2014

(55 % OF 23.0 P.S.F. G.S.L. PLUS 8.4 P.S.F. RAIN LOAD) EQUALS 21.0 P.S.F. SPECIFIED ROOF LIVE LOAD

CSI: TC=0.18/1.00 (C-D:1) , BC=0.07/1.00 (B-F:4) , WB=0.05/1.00 (C-F:1) , SSI=0.07/1.00 (C-D:1)

DOL LUMBER=1.00 NAIL=1.00 LS BEND=1.10 COMP=1.10 SHEAR=1.10 TENS= 1.10

COMPANION LIVE LOAD FACTOR = 1.00

TRUSS PLATE MANUFACTURER IS NOT RESPONSIBLE FOR QUALITY CONTROL IN THE TRUSS MANUFACTURING PLANT .

NAIL VALUES

PLATE	GRIP(DRY) (PSI) MAX	MIN	SHEAR (PLI) MAX	MIN	SECTION (PLI) MAX	MIN
MT20	650	371	1747	788	1987	1873

PLATE PLACEMENT TOL. = 0.250 inches

PLATE ROTATION TOL. = 5.0 Deg.

JSI GRIP= 0.31 (D) (INPUT = 0.90)
JSI METAL= 0.12 (D) (INPUT = 1.00)

JOB NAME	TRUSS NAME	QUANTITY	PLY	JOB DESC.		DRWG NO.
343177	H24T		1	TRUSS DESC.	JT 45147	E22052757

Alpa Roof Truss, Maple

Version 8.530 S Feb 23 2022 MiTek Industries, Inc. Tue Jun 7 11:59:44 2022 Page 1

ID: 01SUN7GZ3P25l3oMs5H1nyKJTP-aj3s09A1iZ9WKfeYVH2K3JxJ2vbo3stehpqH1uz8hqD

Scale = 1:59.2

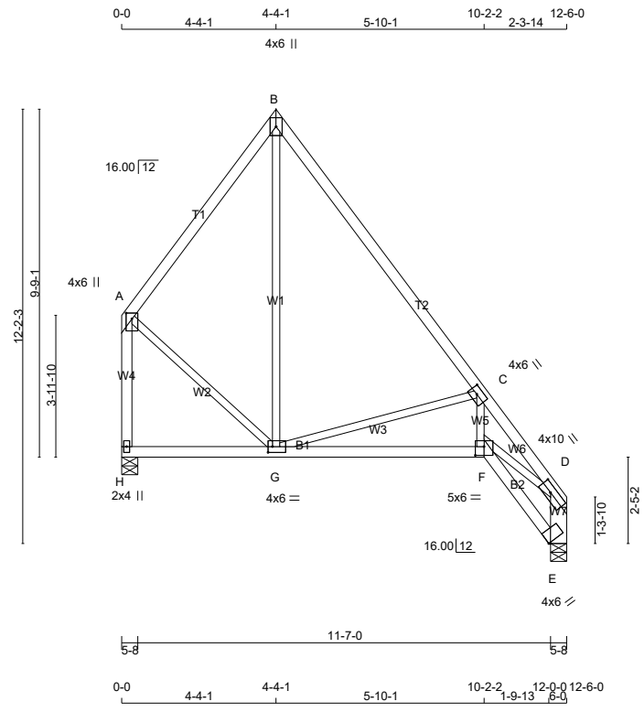

TOTAL WEIGHT = 2 X 66 = 133 lb

[M][F]

LUMBER

N. L. G. A. RULES

CHORDS	SIZE		LUMBER	DESCR.
A - B	2x4	DRY	No.2	SPF
B - D	2x4	DRY	No.2	SPF
H - A	2x4	DRY	No.2	SPF
E - D	2x6	DRY	No.2	SPF
H - F	2x4	DRY	No.2	SPF
F - E	2x4	DRY	No.2	SPF
ALL WEBS EXCEPT	2x3	DRY	No.2	SPF

DRY: SEASONED LUMBER.

PLATES (table is in inches)

JT	TYPE	PLATES	W	LEN	Y	X
A	TMVW+p	MT20	4.0	6.0	2.00	2.00
B	TTW+p	MT20	4.0	6.0		
C	TMWW-t	MT20	4.0	6.0	2.00	2.50
D	TMVW-t	MT20	4.0	10.0	2.00	4.00
E	BVM1+l	MT20	4.0	6.0	0.50	Edge
F	BBWW-l	MT20	5.0	6.0	3.00	3.00
G	BMWWW-t	MT20	4.0	6.0	2.00	1.50
H	BMV1+p	MT20	2.0	4.0		

Edge - INDICATES REFERENCE CORNER OF PLATE TOUCHES EDGE OF CHORD.

LATERAL BRACE(S) SHOWN SHALL BE 2X4 SPF#2

DIMENSIONS, SUPPORTS AND LOADINGS SPECIFIED BY FABRICATOR TO BE VERIFIED BY BUILDING DESIGNER

BEARINGS

JT	FACTORED GROSS REACTION VERT	HORZ	MAXIMUM FACTORED GROSS REACTION DOWN	HORZ	UPLIFT	INPUT BRG	REQRD BRG
H	603	0	603	0	0	5-8	1-8
E	603	0	603	0	0	5-8	5-8

UNFACTORED REACTIONS

JT	1ST LCASE COMBINED	MAX./MIN. COMPONENT REACTIONS SNOW	LIVE	PERM.LIVE	WIND	DEAD	SOIL
H	430	262 / 0	0 / 0	0 / 0	0 / 0	167 / 0	0 / 0
E	430	262 / 0	0 / 0	0 / 0	0 / 0	167 / 0	0 / 0

BEARING MATERIAL TO BE SPF NO.2 OR BETTER AT JOINT(S) H, E
BEARING SIZE FACTOR = 1.15 AT JNT(S) E (BASED ON SUPPORT DEPTH = 1-8)

BRACING

TOP CHORD TO BE SHEATHED OR MAX. PURLIN SPACING = 5.26 FT.
MAX. UNBRACED BOTTOM CHORD LENGTH = 10.00 FT OR RIGID CEILING DIRECTLY APPLIED.

ALL PITCH BREAKS AND PERIMETER CORNER JOINTS MUST BE LATERALLY RESTRAINED.

LOADING

TOTAL LOAD CASES: (4)

CHORDS MEMB. FR-TO	MAX. FACTORED FORCE (LBS)	FACTORED VERT. LOAD (PLF) FROM	TO	MAX CSI (LC)	MAX. UNBRAC LENGTH	WEBS MEMB. FR-TO	MAX. FACTORED FORCE (LBS)	MAX CSI (LC)
A- B	-315 / 0	-78.0	-78.0	0.19 (1)	6.25	G- B	0 / 149	0.05 (4)
B- C	-345 / 0	-78.0	-78.0	0.33 (1)	6.25	G- C	-672 / 0	0.43 (1)
C- D	-1384 / 0	-78.0	-78.0	0.25 (1)	5.26	F- C	0 / 661	0.15 (1)
H- A	-577 / 0	0.0	0.0	0.16 (1)	7.81	A- G	0 / 245	0.06 (1)
E- D	-581 / 0	0.0	0.0	0.04 (1)	7.81	F- D	0 / 1053	0.24 (1)
H- G	0 / 0	-18.5	-18.5	0.15 (4)	10.00			
G- F	0 / 833	-18.5	-18.5	0.22 (4)	10.00			
F- E	0 / 0	-18.5	-18.5	0.03 (4)	10.00			

DESIGN CRITERIA

SPECIFIED LOADS:

TOP CH.	LL	=	21.0	PSF
	DL	=	6.0	PSF
BOT CH.	LL	=	0.0	PSF
	DL	=	7.4	PSF
TOTAL LOAD		=	34.4	PSF

SPACING = 24.0 IN. C/C

THIS TRUSS IS DESIGNED FOR RESIDENTIAL OR SMALL BUILDING REQUIREMENTS OF PART 9, NBCC 2015

THIS DESIGN COMPLIES WITH:
- PART 9 OF BCBC 2018 , ABC 2019
- PART 9 OF OBC 2012 (2019 AMENDMENT)
- CSA 086-14
- TPIC 2014

(55 % OF 23.0 P.S.F. G.S.L. PLUS 8.4 P.S.F. RAIN LOAD) EQUALS 21.0 P.S.F. SPECIFIED ROOF LIVE LOAD

ALLOWABLE DEFL.(LL)= L/360 (0.42")
CALCULATED VERT. DEFL.(LL) = L/ 999 (0.03")
ALLOWABLE DEFL.(TL)= L/360 (0.42")
CALCULATED VERT. DEFL.(TL) = L/ 999 (0.07")

CSI: TC=0.33/1.00 (B-C:1) , BC=0.22/1.00 (F-G:4) , WB=0.43/1.00 (C-G:1) , SSI=0.12/1.00 (B-C:1)

DOL LUMBER=1.00 NAIL=1.00 LS BEND=1.10 COMP=1.10 SHEAR=1.10 TENS= 1.10

COMPANION LIVE LOAD FACTOR = 1.00

AUTOSOLVE LEFT HEEL ONLY

TRUSS PLATE MANUFACTURER IS NOT RESPONSIBLE FOR QUALITY CONTROL IN THE TRUSS MANUFACTURING PLANT .

NAIL VALUES

PLATE	GRIP(DRY) (PSI) MAX	MIN	SHEAR (PLI) MAX	MIN	SECTION (PLI) MAX	MIN
MT20	650	371	1747	788	1987	1873

PLATE PLACEMENT TOL. = 0.250 inches

PLATE ROTATION TOL. = 5.0 Deg.

JSI GRIP= 0.84 (G) (INPUT = 0.90)
JSI METAL= 0.44 (F) (INPUT = 1.00)

JOB NAME	TRUSS NAME	QUANTITY	PLY	JOB DESC.	DRWG NO.
343177	H25T		1	TRUSS DESC. JT 45147	E22052758

Alpa Roof Truss, Maple

Version 8.530 S Feb 23 2022 MiTek Industries, Inc. Tue Jun 7 11:59:45 2022 Page 1

ID: 01SUN7GZ3P25I3oMs5H1nyKJTP-2wdEEUAfTsHNypDl3?aZbWTVsJxHoKmnwSaraLz8hqC

Scale = 1:83.4

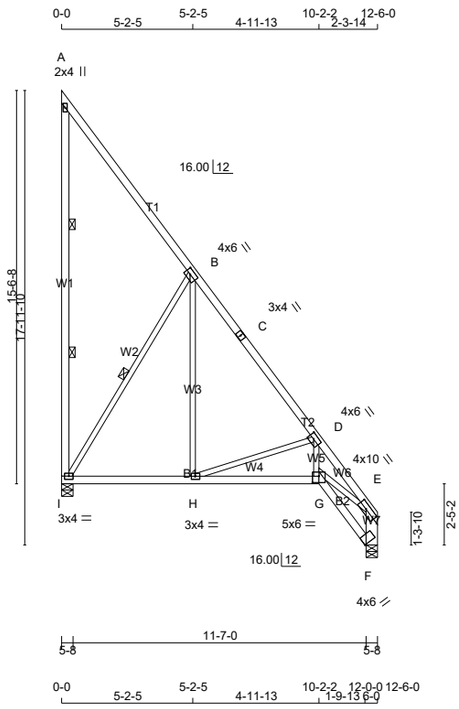

TOTAL WEIGHT = 6 X 81 = 483 lb

[M][F]

LUMBER

N. L. G. A. RULES

CHORDS	SIZE		LUMBER	DESCR.
I - A	2x4	DRY	No.2	SPF
A - C	2x4	DRY	No.2	SPF
C - E	2x4	DRY	No.2	SPF
F - E	2x6	DRY	No.2	SPF
I - G	2x4	DRY	No.2	SPF
G - F	2x4	DRY	No.2	SPF
ALL WEBS EXCEPT	2x3	DRY	No.2	SPF

DRY: SEASONED LUMBER.

PLATES (table is in inches)

JT	TYPE	PLATES	W	LEN	Y	X
A	TMV+p	MT20	2.0	4.0		
B	TMWW-t	MT20	4.0	6.0	2.00	2.50
C	TS-t	MT20	3.0	4.0		
D	TMWW-t	MT20	4.0	6.0	2.00	2.50
E	TMVW-t	MT20	4.0	10.0	2.00	4.00
F	BVM1+I	MT20	4.0	6.0	0.50	Edge
G	BBWW-I	MT20	5.0	6.0	3.00	3.00
H	BMWW-t	MT20	3.0	4.0		
I	BMVW1-t	MT20	3.0	4.0		

Edge - INDICATES REFERENCE CORNER OF PLATE TOUCHES EDGE OF CHORD.

LATERAL BRACE(S) SHOWN SHALL BE 2X4 SPF#2

LICENSED PROFESSIONAL ENGINEER
Y. WIDYA
100225448
06/07/2022
PROVINCE OF ONTARIO

DIMENSIONS, SUPPORTS AND LOADINGS SPECIFIED BY FABRICATOR TO BE VERIFIED BY BUILDING DESIGNER

BEARINGS

JT	FACTORED GROSS REACTION VERT	HORZ	MAXIMUM FACTORED GROSS REACTION DOWN	HORZ	UPLIFT	INPUT BRG	REQRD BRG
I	603	0	603	0	0	5-8	1-8
F	603	0	603	0	0	5-8	5-8

UNFACTORED REACTIONS

JT	1ST LCASE COMBINED	MAX./MIN. COMPONENT REACTIONS SNOW	LIVE	PERM.LIVE	WIND	DEAD	SOIL
I	430	262 / 0	0 / 0	0 / 0	0 / 0	167 / 0	0 / 0
F	430	262 / 0	0 / 0	0 / 0	0 / 0	167 / 0	0 / 0

BEARING MATERIAL TO BE SPF NO.2 OR BETTER AT JOINT(S) I, F
BEARING SIZE FACTOR = 1.15 AT JNT(S) F (BASED ON SUPPORT DEPTH = 1-8)

BRACING

TOP CHORD TO BE SHEATHED OR MAX. PURLIN SPACING = 5.61 FT.
MAX. UNBRACED BOTTOM CHORD LENGTH = 10.00 FT OR RIGID CEILING DIRECTLY APPLIED.

ALL PITCH BREAKS AND PERIMETER CORNER JOINTS MUST BE LATERALLY RESTRAINED.

2 LATERAL BRACE(S) AT 1/ 3 LENGTH OF A-I.
1 LATERAL BRACE(S) AT 1/ 2 LENGTH OF B-I.

END VERTICAL(S) MUST BE SHEATHED OR HAVE BRACES AS INDICATED IN THE MAX. UNBRACED LENGTH COLUMN OF THE TABLE BELOW

LOADING

TOTAL LOAD CASES: (4)

CHORDS

MEMB. FR-TO	MAX. FACTORED FORCE (LBS)	FACTORED VERT. LOAD LC1 (PLF) FROM	TO	MAX CSI (LC)	MAX. UNBRAC LENGTH
I- A	-158 / 0	0.0	0.0	0.09 (1)	6.25
A- B	-35 / 0	-78.0	-78.0	0.26 (1)	6.25
B- C	-403 / 0	-78.0	-78.0	0.25 (1)	6.25
C- D	-403 / 0	-78.0	-78.0	0.25 (1)	6.25
D- E	-1282 / 0	-78.0	-78.0	0.10 (1)	5.61
F- E	-581 / 0	0.0	0.0	0.04 (1)	7.81
I- H	0 / 257	-18.5	-18.5	0.16 (4)	10.00
H- G	0 / 747	-18.5	-18.5	0.20 (4)	10.00
G- F	0 / 0	-18.5	-18.5	0.03 (4)	10.00

WEBS

MEMB. FR-TO	MAX. FACTORED FORCE (LBS)	MAX CSI (LC)
I- B	-481 / 0	0.32 (1)
H- B	0 / 281	0.07 (4)
H- D	-520 / 0	0.23 (1)
G- D	0 / 592	0.13 (1)
G- E	0 / 945	0.21 (1)

DESIGN CRITERIA

SPECIFIED LOADS:

TOP CH.	LL	=	21.0	PSF
	DL	=	6.0	PSF
BOT CH.	LL	=	0.0	PSF
	DL	=	7.4	PSF
TOTAL LOAD		=	34.4	PSF

SPACING = 24.0 IN. C/C

THIS TRUSS IS DESIGNED FOR RESIDENTIAL OR SMALL BUILDING REQUIREMENTS OF PART 9, NBCC 2015

THIS DESIGN COMPLIES WITH:
- PART 9 OF BCBC 2018 , ABC 2019
- PART 9 OF OBC 2012 (2019 AMENDMENT)
- CSA 086-14
- TPIC 2014

(55 % OF 23.0 P.S.F. G.S.L. PLUS 8.4 P.S.F. RAIN LOAD) EQUALS 21.0 P.S.F. SPECIFIED ROOF LIVE LOAD

ALLOWABLE DEFL.(LL)= L/360 (0.42")
CALCULATED VERT. DEFL.(LL) = L/ 999 (0.02")
ALLOWABLE DEFL.(TL)= L/360 (0.42")
CALCULATED VERT. DEFL.(TL) = L/ 999 (0.05")

CSI: TC=0.26/1.00 (A-B:1) , BC=0.20/1.00 (G-H:4) , WB=0.32/1.00 (B-I:1) , SSI=0.12/1.00 (A-B:1)

DOL LUMBER=1.00 NAIL=1.00 LS BEND=1.10 COMP=1.10 SHEAR=1.10 TENS= 1.10

COMPANION LIVE LOAD FACTOR = 1.00

AUTOSOLVE LEFT HEEL ONLY

TRUSS PLATE MANUFACTURER IS NOT RESPONSIBLE FOR QUALITY CONTROL IN THE TRUSS MANUFACTURING PLANT .

NAIL VALUES

PLATE	GRIP(DRY) (PSI) MAX	MIN	SHEAR (PLI) MAX	MIN	SECTION (PLI) MAX	MIN
MT20	650	371	1747	788	1987	1873

PLATE PLACEMENT TOL. = 0.250 inches

PLATE ROTATION TOL. = 5.0 Deg.

JSI GRIP= 0.70 (H) (INPUT = 0.90)
JSI METAL= 0.40 (G) (INPUT = 1.00)

JOB NAME	TRUSS NAME	QUANTITY	PLY	JOB DESC.	DRWG NO.
343177	H26		1	TRUSS DESC. JT 45147	E22052759

Alpa Roof Truss, Maple

Version 8.530 S Feb 23 2022 MiTek Industries, Inc. Tue Jun 7 11:59:46 2022 Page 1

ID: 01SUN7GZ3P25I3oMs5H1nyKJTP-X6BcRqBHEAPEayoxci5o8k0ddjHSXofx86JO6nz8hcB

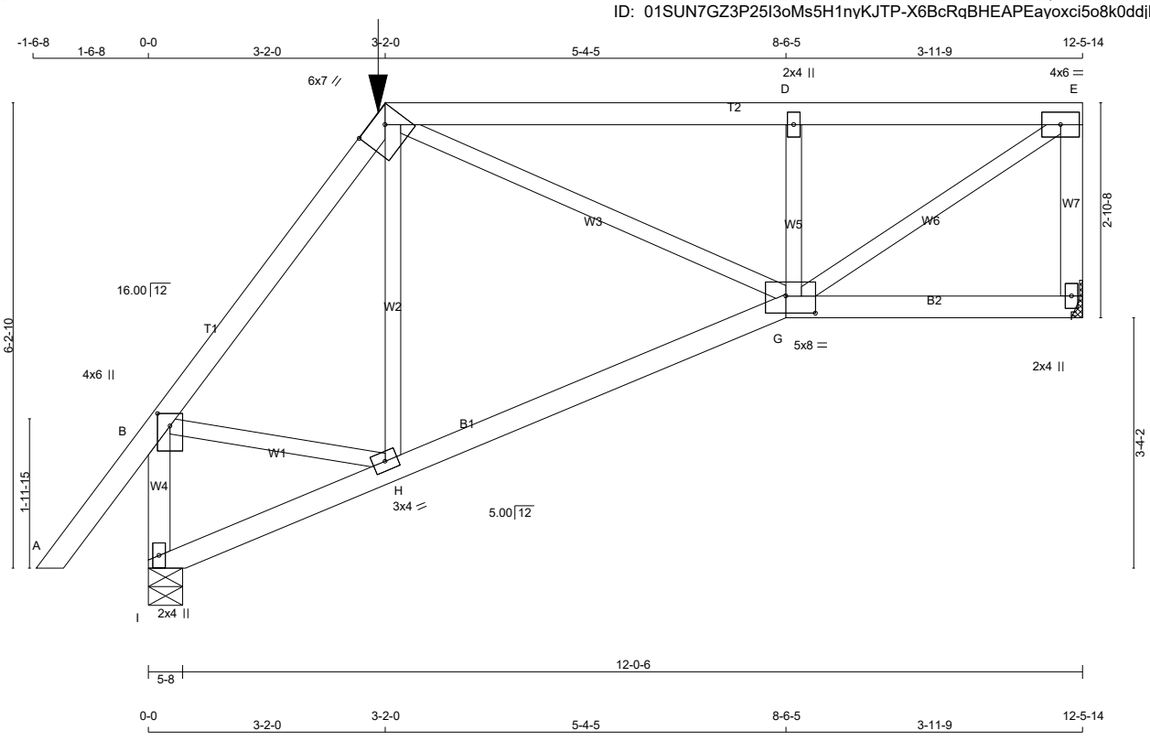

TOTAL WEIGHT = 55 lb

[M]

LUMBER

N. L. G. A. RULES

CHORDS	SIZE		LUMBER	DESCR.
A - C	2x4	DRY	No.2	SPF
C - E	2x4	DRY	No.2	SPF
F - E	2x4	DRY	No.2	SPF
I - B	2x4	DRY	No.2	SPF
I - G	2x4	DRY	No.2	SPF
G - F	2x4	DRY	No.2	SPF
ALL WEBS EXCEPT	2x3	DRY	No.2	SPF

DRY: SEASONED LUMBER.

PLATES (table is in inches)

JT	TYPE	PLATES	W	LEN	Y	X
B	TMVW+p	MT20	4.0	6.0	2.00	2.00
C	TTWW-h	MT20	6.0	7.0	2.00	4.25
D	TMW+w	MT20	2.0	4.0		
E	TMVW-t	MT20	4.0	6.0		
F	BMV1+p	MT20	2.0	4.0		
G	BBWWW-p	MT20	5.0	8.0	2.75	4.75
H	BMWW-t	MT20	3.0	4.0		
I	BMV1+p	MT20	2.0	4.0		

LATERAL BRACE(S) SHOWN SHALL BE 2X4 SPF#2

DIMENSIONS, SUPPORTS AND LOADINGS SPECIFIED BY FABRICATOR TO BE VERIFIED BY BUILDING DESIGNER

BEARINGS

JT	FACTORED GROSS REACTION VERT	HORZ	MAXIMUM FACTORED GROSS REACTION DOWN	HORZ	UPLIFT	INPUT BRG IN-SX	REQRD BRG IN-SX
F	786	0	786	0	0	MECHANICAL	
I	874	0	874	0	0	5-8	1-8

A SUITABLE HANGER/MECHANICAL CONNECTION IS REQUIRED AT JOINT F. MINIMUM BEARING LENGTH AT JOINT F = 1-8.

UNFACTORED REACTIONS

JT	1ST LCASE COMBINED	MAX./MIN. COMPONENT REACTIONS SNOW	LIVE	PERM.LIVE	WIND	DEAD	SOIL
F	561	343 / 0	0 / 0	0 / 0	0 / 0	217 / 0	0 / 0
I	621	390 / 0	0 / 0	0 / 0	0 / 0	231 / 0	0 / 0

BEARING MATERIAL TO BE SPF NO.2 OR BETTER AT JOINT(S) I

BRACING

TOP CHORD TO BE SHEATHED OR MAX. PURLIN SPACING = 5.68 FT.
MAX. UNBRACED BOTTOM CHORD LENGTH = 10.00 FT OR RIGID CEILING DIRECTLY APPLIED.

ALL PITCH BREAKS AND PERIMETER CORNER JOINTS MUST BE LATERALLY RESTRAINED.

LOADING

TOTAL LOAD CASES: (4)

CHORDS

MEMB. FR-TO	MAX. FORCE (LBS)	FACTORED VERT. LOAD (PLF) FROM	TO	LC1 CSI (LC)	MAX UNBRAC LENGTH
A- B	0 / 43	-78.0	-78.0	0.12 (1)	10.00
B- C	-705 / 0	-78.0	-78.0	0.16 (1)	6.25
C- D	-924 / 0	-100.7	-100.7	0.45 (1)	5.74
D- E	-948 / 0	-100.7	-100.7	0.44 (1)	5.68
F- E	-739 / 0	0.0	0.0	0.11 (1)	7.81
I- B	-853 / 0	0.0	0.0	0.11 (1)	7.81
I- H	0 / 8	-23.9	-23.9	0.16 (4)	10.00
H- G	0 / 448	-23.9	-23.9	0.21 (4)	10.00
G- F	0 / 0	-23.9	-23.9	0.12 (4)	10.00

WEBS

MEMB. FR-TO	MAX. FORCE (LBS)	MAX CSI (LC)
H- C	-98 / 55	0.04 (1)
C- G	0 / 561	0.14 (1)
G- D	-583 / 0	0.11 (1)
G- E	0 / 1131	0.28 (1)
B- H	0 / 423	0.10 (1)

FACTORED CONCENTRATED LOADS (LBS)

JT	LOC.	LC1	MAX-	MAX+	FACE	DIR.	TYPE	HEEL	CONN.
C	3-2-0	-69	-69	---	FRONT	VERT	TOTAL	---	C1

CONNECTION REQUIREMENTS

1) **C1:** A SUITABLE HANGER/MECHANICAL CONNECTION IS REQUIRED.

DESIGN CRITERIA

SPECIFIED LOADS:

TOP	CH.	LL	=	21.0	PSF
		DL	=	6.0	PSF
BOT	CH.	LL	=	0.0	PSF
		DL	=	7.4	PSF
TOTAL	LOAD		=	34.4	PSF

SPACING = 24.0 IN. C/C

LOADING IN FLAT SECTION BASED ON A SLOPE OF 2.00/12 MINIMUM

GIRDER TYPE: CPrimeHip
LEFT SETBACK = 3-2-0
RIGHT SETBACK = 0-0
END SETBACK = 3-2-0
END WALL WIDTH = 0-0
CORNER FRAMING TYPE: CONVENTIONAL
END JACK TYPE: CONVENTIONAL
APPLIED TO FRONT SIDE
- ADDT'L LOADS BASED ON 55 % OF GSL.

THIS TRUSS IS DESIGNED FOR RESIDENTIAL OR SMALL BUILDING REQUIREMENTS OF PART 9, NBCC 2015

THIS DESIGN COMPLIES WITH:
- PART 9 OF BCBC 2018 , ABC 2019
- PART 9 OF OBC 2012 (2019 AMENDMENT)
- CSA 086-14
- TPIC 2014

(55 % OF 23.0 P.S.F. G.S.L. PLUS 8.4 P.S.F. RAIN LOAD) EQUALS 21.0 P.S.F. SPECIFIED ROOF LIVE LOAD

ALLOWABLE DEFL.(LL)= L/360 (0.42")
CALCULATED VERT. DEFL.(LL) = L/ 999 (0.02")
ALLOWABLE DEFL.(TL)= L/360 (0.42")
CALCULATED VERT. DEFL.(TL) = L/ 999 (0.06")

CSI: TC=0.45/1.00 (C-D:1) , BC=0.21/1.00 (G-H:4) , WB=0.28/1.00 (E-G:1) , SSI=0.28/1.00 (C-D:1)

DOL LUMBER=1.00 NAIL=1.00 LS BEND=1.00 COMP=1.00 SHEAR=1.00 TENS= 1.00

COMPANION LIVE LOAD FACTOR = 1.00

TRUSS PLATE MANUFACTURER IS NOT RESPONSIBLE FOR QUALITY CONTROL IN THE TRUSS MANUFACTURING PLANT .

NAIL VALUES

PLATE	GRIP(DRY) (PSI) MAX	MIN	SHEAR (PLI) MAX	MIN	SECTION (PLI) MAX	MIN
MT20	650	371	1747	788	1987	1873

PLATE PLACEMENT TOL. = 0.250 inches

PLATE ROTATION TOL. = 5.0 Deg.

JSI GRIP= 0.89 (C) (INPUT = 0.90)
JSI METAL= 0.31 (I) (INPUT = 1.00)

JOB NAME	TRUSS NAME	QUANTITY	PLY	JOB DESC.	DRWG NO.
343177	H27		1	TRUSS DESC. JT 45147	E22052760

Alpa Roof Truss, Maple

Version 8.530 S Feb 23 2022 MiTek Industries, Inc. Tue Jun 7 11:59:47 2022 Page 1

ID: 01SUN7GZ3P25I3oMs5H1nyKJTP-?Il fACv UX5B6N7AQc1hxZqN7f0GHm4Nm3yeDz8hqA

Scale = 1:38.5

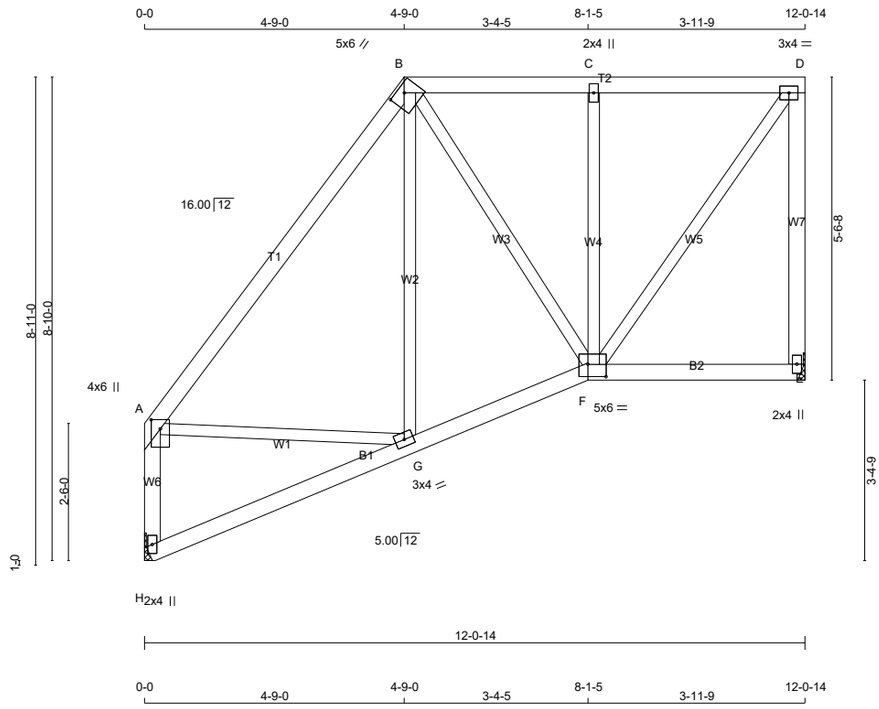

TOTAL WEIGHT = 63 lb

[M]

LUMBER

N. L. G. A. RULES

CHORDS	SIZE		LUMBER	DESCR.
A - B	2x4	DRY	No.2	SPF
B - D	2x4	DRY	No.2	SPF
E - D	2x4	DRY	No.2	SPF
H - A	2x4	DRY	No.2	SPF
H - F	2x4	DRY	No.2	SPF
F - E	2x4	DRY	No.2	SPF
ALL WEBS EXCEPT	2x3	DRY	No.2	SPF

DRY: SEASONED LUMBER.

PLATES (table is in inches)

JT	TYPE	PLATES	W	LEN	Y	X
A	TMVW+p	MT20	4.0	6.0	2.00	2.00
B	TTWW-h	MT20	5.0	6.0	1.50	3.00
C	TMW+w	MT20	2.0	4.0		
D	TMVW-t	MT20	3.0	4.0		
E	BMV1+p	MT20	2.0	4.0		
F	BBWWW-p	MT20	5.0	6.0	2.75	4.00
G	BMWW-t	MT20	3.0	4.0		
H	BMV1+p	MT20	2.0	4.0		

LATERAL BRACE(S) SHOWN SHALL BE 2X4 SPF#2

DIMENSIONS, SUPPORTS AND LOADINGS SPECIFIED BY FABRICATOR TO BE VERIFIED BY BUILDING DESIGNER

BEARINGS

JT	FACTORED GROSS REACTION VERT	HORZ	MAXIMUM FACTORED GROSS REACTION DOWN	HORZ	UPLIFT	INPUT BRG	REQRD BRG
E	582	0	582	0	0	MECHANICAL	
H	582	0	582	0	0	MECHANICAL	

A SUITABLE HANGER/MECHANICAL CONNECTION IS REQUIRED AT JOINT E, H. MINIMUM BEARING LENGTH AT JOINT E = 1-8, JOINT H = 1-12.

UNFACTORED REACTIONS

JT	1ST LCASE COMBINED	MAX./MIN. COMPONENT REACTIONS SNOW	LIVE	PERM.LIVE	WIND	DEAD	SOIL
E	415	253 / 0	0 / 0	0 / 0	0 / 0	162 / 0	0 / 0
H	415	253 / 0	0 / 0	0 / 0	0 / 0	162 / 0	0 / 0

BRACING

TOP CHORD TO BE SHEATHED OR MAX. PURLIN SPACING = 6.25 FT.
MAX. UNBRACED BOTTOM CHORD LENGTH = 10.00 FT OR RIGID CEILING DIRECTLY APPLIED.

ALL PITCH BREAKS AND PERIMETER CORNER JOINTS MUST BE LATERALLY RESTRAINED.

LOADING

TOTAL LOAD CASES: (4)

CHORDS

MEMB. FR-TO	MAX. FACTORED FORCE (LBS)	FACTORED VERT. LOAD (PLF) FROM	TO	LC1 MAX CSI (LC)	MAX. UNBRAC LENGTH
A- B	-438 / 0	-78.0	-78.0	0.32 (1)	6.25
B- C	-315 / 0	-78.0	-78.0	0.17 (1)	6.25
C- D	-323 / 0	-78.0	-78.0	0.17 (1)	6.25
E- D	-546 / 0	0.0	0.0	0.30 (1)	7.81
H- A	-546 / 0	0.0	0.0	0.08 (1)	7.81
H- G	0 / 4	-18.5	-18.5	0.10 (4)	10.00
G- F	0 / 278	-18.5	-18.5	0.12 (4)	10.00
F- E	0 / 0	-18.5	-18.5	0.09 (4)	10.00

WEBS

MEMB. FR-TO	MAX. FACTORED FORCE (LBS)	MAX CSI (LC)
G- B	-22 / 60	0.02 (4)
B- F	0 / 100	0.02 (1)
F- C	-347 / 0	0.16 (1)
F- D	0 / 535	0.12 (1)
A- G	0 / 262	0.06 (1)

DESIGN CRITERIA

SPECIFIED LOADS:

TOP CH.	LL	=	21.0	PSF
	DL	=	6.0	PSF
BOT CH.	LL	=	0.0	PSF
	DL	=	7.4	PSF
TOTAL LOAD		=	34.4	PSF

SPACING = 24.0 IN. C/C

LOADING IN FLAT SECTION BASED ON A SLOPE OF 2.00/12 MINIMUM

THIS TRUSS IS DESIGNED FOR RESIDENTIAL OR SMALL BUILDING REQUIREMENTS OF PART 9, NBCC 2015

THIS DESIGN COMPLIES WITH:
- PART 9 OF BCBC 2018 , ABC 2019
- PART 9 OF OBC 2012 (2019 AMENDMENT)
- CSA 086-14
- TPIC 2014

(55 % OF 23.0 P.S.F. G.S.L. PLUS 8.4 P.S.F. RAIN LOAD) EQUALS 21.0 P.S.F. SPECIFIED ROOF LIVE LOAD

ALLOWABLE DEFL.(LL)= L/360 (0.40")
CALCULATED VERT. DEFL.(LL) = L/ 999 (0.01")
ALLOWABLE DEFL.(TL)= L/360 (0.40")
CALCULATED VERT. DEFL.(TL) = L/ 999 (0.02")

CSI: TC=0.32/1.00 (A-B:1) , BC=0.12/1.00 (F-G:4) , WB=0.16/1.00 (C-F:1) , SSI=0.14/1.00 (C-D:1)

DOL LUMBER=1.00 NAIL=1.00 LS BEND=1.10 COMP=1.10 SHEAR=1.10 TENS= 1.10

COMPANION LIVE LOAD FACTOR = 1.00

TRUSS PLATE MANUFACTURER IS NOT RESPONSIBLE FOR QUALITY CONTROL IN THE TRUSS MANUFACTURING PLANT .

NAIL VALUES

PLATE	GRIP(DRY) (PSI) MAX	MIN	SHEAR (PLI) MAX	MIN	SECTION (PLI) MAX	MIN
MT20	650	371	1747	788	1987	1873

PLATE PLACEMENT TOL. = 0.250 inches

PLATE ROTATION TOL. = 5.0 Deg.

JSI GRIP= 0.88 (D) (INPUT = 0.90)
JSI METAL= 0.20 (H) (INPUT = 1.00)

JOB NAME	TRUSS NAME	QUANTITY	PLY	JOB DESC.	DRWG NO.
343177	H28		1	TRUSS DESC. JT 45147	E22052761

Alpa Roof Truss, Maple

Version 8.530 S Feb 23 2022 MiTek Industries, Inc. Tue Jun 7 11:59:48 2022 Page 1

ID: 01SUN7GZ3P25I3oMs5H1nyKJTP-TVJMsWDXlngypGyJk77GD952YWzd?dhDcQoVAqz8hq9

Scale = 1:50.4

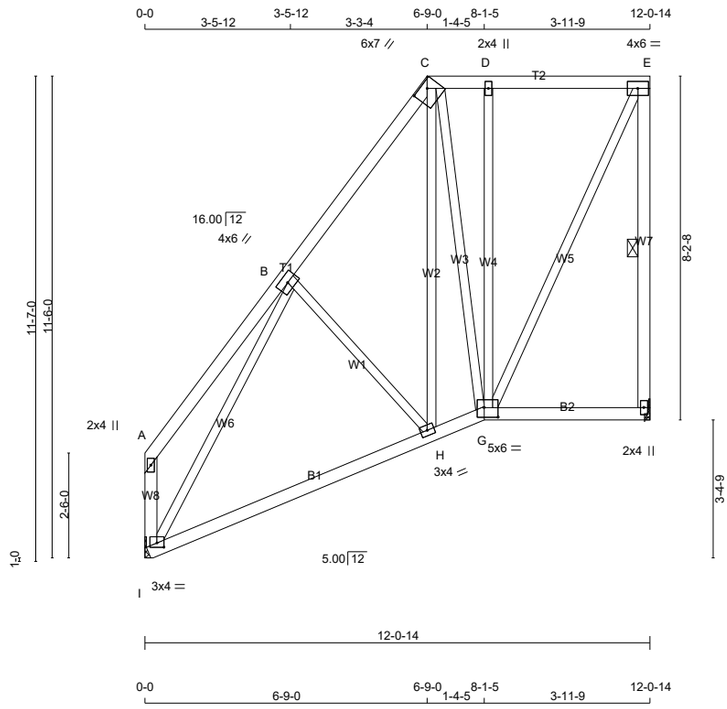

TOTAL WEIGHT = 81 lb

[M][F]

LUMBER

N. L. G. A. RULES

CHORDS	SIZE		LUMBER	DESCR.
A - C	2x4	DRY	No.2	SPF
C - E	2x4	DRY	No.2	SPF
F - E	2x4	DRY	No.2	SPF
I - A	2x4	DRY	No.2	SPF
I - G	2x4	DRY	No.2	SPF
G - F	2x4	DRY	No.2	SPF
ALL WEBS EXCEPT	2x3	DRY	No.2	SPF

DRY: SEASONED LUMBER.

PLATES (table is in inches)

JT	TYPE	PLATES	W	LEN	Y	X
A	TMV+p	MT20	2.0	4.0		
B	TMWW-t	MT20	4.0	6.0		
C	TTWW-h	MT20	6.0	7.0	1.75	4.00
D	TMW+w	MT20	2.0	4.0		
E	TMVW-t	MT20	4.0	6.0		
F	BMV1+p	MT20	2.0	4.0		
G	BBWWW-p	MT20	5.0	6.0	2.75	4.00
H	BMWW-t	MT20	3.0	4.0		
I	BMVW1-p	MT20	3.0	4.0	1.25	2.00

LATERAL BRACE(S) SHOWN SHALL BE 2X4 SPF#2

LICENSED PROFESSIONAL ENGINEER
Y. WIDYA
100225448
06/07/2022
PROVINCE OF ONTARIO

DIMENSIONS, SUPPORTS AND LOADINGS SPECIFIED BY FABRICATOR TO BE VERIFIED BY BUILDING DESIGNER

BEARINGS

JT	FACTORED GROSS REACTION VERT	HORZ	MAXIMUM FACTORED GROSS REACTION DOWN	HORZ	UPLIFT	INPUT BRG	REQRD BRG
F	582	0	582	0	0	MECHANICAL	
I	582	0	582	0	0	MECHANICAL	

A SUITABLE HANGER/MECHANICAL CONNECTION IS REQUIRED AT JOINT F, I. MINIMUM BEARING LENGTH AT JOINT F = 1-8, JOINT I = 1-12.

UNFACTORED REACTIONS

JT	1ST LCASE COMBINED	MAX./MIN. COMPONENT REACTIONS SNOW	LIVE	PERM.LIVE	WIND	DEAD	SOIL
F	415	253 / 0	0 / 0	0 / 0	0 / 0	162 / 0	0 / 0
I	415	253 / 0	0 / 0	0 / 0	0 / 0	162 / 0	0 / 0

BRACING

TOP CHORD TO BE SHEATHED OR MAX. PURLIN SPACING = 6.25 FT.
MAX. UNBRACED BOTTOM CHORD LENGTH = 10.00 FT OR RIGID CEILING DIRECTLY APPLIED.

ALL PITCH BREAKS AND PERIMETER CORNER JOINTS MUST BE LATERALLY RESTRAINED.

1 LATERAL BRACE(S) AT 1/ 2 LENGTH OF E-F.

END VERTICAL(S) MUST BE SHEATHED OR HAVE BRACES AS INDICATED IN THE MAX. UNBRACED LENGTH COLUMN OF THE TABLE BELOW

LOADING

TOTAL LOAD CASES: (4)

CHORDS FR-TO	MAX. FACTORED FORCE (LBS)	FACTORED VERT. LOAD LC1 (PLF) FROM	TO	MAX CSI (LC)	MAX. UNBRAC LENGTH	WEBS MEMB.	MAX. FACTORED FORCE (LBS)	MAX CSI (LC)
A- B	0 / 25	-78.0	-78.0	0.14 (1)	10.00	B- H	-89 / 0	0.04 (1)
B- C	-382 / 0	-78.0	-78.0	0.11 (1)	6.25	H- C	0 / 241	0.06 (4)
C- D	-204 / 0	-78.0	-78.0	0.10 (1)	6.25	C- G	-82 / 0	0.12 (4)
D- E	-210 / 0	-78.0	-78.0	0.13 (1)	6.25	G- D	-289 / 0	0.38 (1)
F- E	-546 / 0	0.0	0.0	0.17 (1)	6.25	G- E	0 / 469	0.11 (1)
I- A	-99 / 0	0.0	0.0	0.01 (1)	7.81	I- B	-611 / 0	0.63 (1)
I- H	0 / 302	-18.5	-18.5	0.23 (4)	10.00			
H- G	0 / 210	-18.5	-18.5	0.22 (4)	10.00			
G- F	0 / 0	-18.5	-18.5	0.09 (4)	10.00			

DESIGN CRITERIA

SPECIFIED LOADS:

TOP	CH.	LL	=	21.0	PSF
		DL	=	6.0	PSF
BOT	CH.	LL	=	0.0	PSF
		DL	=	7.4	PSF
TOTAL	LOAD		=	34.4	PSF

SPACING = 24.0 IN. C/C

LOADING IN FLAT SECTION BASED ON A SLOPE OF 2.00/12 MINIMUM

THIS TRUSS IS DESIGNED FOR RESIDENTIAL OR SMALL BUILDING REQUIREMENTS OF PART 9, NBCC 2015

THIS DESIGN COMPLIES WITH:
- PART 9 OF BCBC 2018 , ABC 2019
- PART 9 OF OBC 2012 (2019 AMENDMENT)
- CSA 086-14
- TPIC 2014

(55 % OF 23.0 P.S.F. G.S.L. PLUS 8.4 P.S.F. RAIN LOAD) EQUALS 21.0 P.S.F. SPECIFIED ROOF LIVE LOAD

ALLOWABLE DEFL.(LL)= L/360 (0.40")
CALCULATED VERT. DEFL.(LL) = L/ 999 (0.01")
ALLOWABLE DEFL.(TL)= L/360 (0.40")
CALCULATED VERT. DEFL.(TL) = L/ 999 (0.07")

CSI: TC=0.17/1.00 (E-F:1) , BC=0.23/1.00 (H-I:4) , WB=0.63/1.00 (B-I:1) , SSI=0.14/1.00 (D-E:1)

DOL LUMBER=1.00 NAIL=1.00 LS BEND=1.10 COMP=1.10 SHEAR=1.10 TENS= 1.10

COMPANION LIVE LOAD FACTOR = 1.00

TRUSS PLATE MANUFACTURER IS NOT RESPONSIBLE FOR QUALITY CONTROL IN THE TRUSS MANUFACTURING PLANT .

NAIL VALUES

PLATE	GRIP(DRY) (PSI) MAX	MIN	SHEAR (PLI) MAX	MIN	SECTION (PLI) MAX	MIN
MT20	650	371	1747	788	1987	1873

PLATE PLACEMENT TOL. = 0.250 inches

PLATE ROTATION TOL. = 5.0 Deg.

JSI GRIP= 0.90 (I) (INPUT = 0.90)
JSI METAL= 0.18 (I) (INPUT = 1.00)

JOB NAME	TRUSS NAME	QUANTITY	PLY	JOB DESC.	DRWG NO.
343177	H29		1	TRUSS DESC. JT 45147	E22052762

Alpa Roof Truss, Maple

Version 8.530 S Feb 23 2022 MiTek Industries, Inc. Tue Jun 7 11:59:49 2022 Page 1

ID: 01SUN7GZ3P25I3oMs5H1nyKJTP-xhsl3sD9W5opRQXWIreVmMeClwKak9INr4Y2j6z8hq8

Scale = 1:62.5

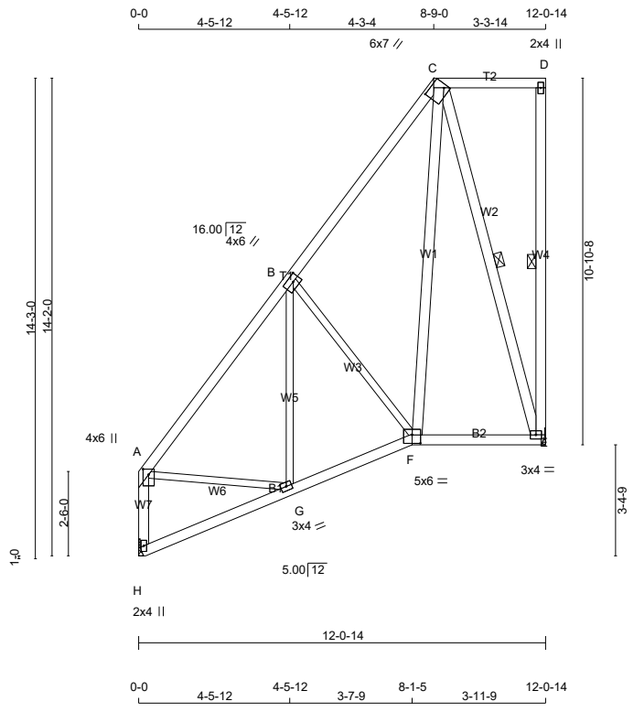

TOTAL WEIGHT = 87 lb

[M][F]

LUMBER

N. L. G. A. RULES

CHORDS	SIZE		LUMBER	DESCR.
A - C	2x4	DRY	No.2	SPF
C - D	2x4	DRY	No.2	SPF
E - D	2x4	DRY	No.2	SPF
H - A	2x4	DRY	No.2	SPF
H - F	2x4	DRY	No.2	SPF
F - E	2x4	DRY	No.2	SPF
ALL WEBS	2x3	DRY	No.2	SPF
EXCEPT				
F - C	2x4	DRY	No.2	SPF
C - E	2x4	DRY	No.2	SPF

DRY: SEASONED LUMBER.

PLATES (table is in inches)

JT	TYPE	PLATES	W	LEN	Y	X
A	TMVW+p	MT20	4.0	6.0	2.00	2.00
B	TMWW-t	MT20	4.0	6.0	2.00	2.50
C	TTWW-h	MT20	6.0	7.0	4.00	5.75
D	TMV+p	MT20	2.0	4.0		
E	BMVW1-t	MT20	3.0	4.0		
F	BBWW-l	MT20	5.0	6.0	3.00	3.00
G	BMWW-t	MT20	3.0	4.0		
H	BMV1+p	MT20	2.0	4.0		

LATERAL BRACE(S) SHOWN SHALL BE 2X4 SPF#2

DIMENSIONS, SUPPORTS AND LOADINGS SPECIFIED BY FABRICATOR TO BE VERIFIED BY BUILDING DESIGNER

BEARINGS

JT	FACTORED GROSS REACTION VERT	HORZ	MAXIMUM FACTORED GROSS REACTION DOWN	HORZ	UPLIFT	INPUT BRG	REQRD BRG
E	582	0	582	0	0	MECHANICAL	
H	582	0	582	0	0	MECHANICAL	

A SUITABLE HANGER/MECHANICAL CONNECTION IS REQUIRED AT JOINT E, H. MINIMUM BEARING LENGTH AT JOINT E = 1-8, JOINT H = 1-12.

UNFACTORED REACTIONS

JT	1ST LCASE COMBINED	MAX./MIN. COMPONENT REACTIONS SNOW	LIVE	PERM.LIVE	WIND	DEAD	SOIL
E	415	253 / 0	0 / 0	0 / 0	0 / 0	162 / 0	0 / 0
H	415	253 / 0	0 / 0	0 / 0	0 / 0	162 / 0	0 / 0

BRACING

TOP CHORD TO BE SHEATHED OR MAX. PURLIN SPACING = 6.25 FT.
MAX. UNBRACED BOTTOM CHORD LENGTH = 10.00 FT OR RIGID CEILING DIRECTLY APPLIED.

ALL PITCH BREAKS AND PERIMETER CORNER JOINTS MUST BE LATERALLY RESTRAINED.

1 LATERAL BRACE(S) AT 1/ 2 LENGTH OF D-E, C-E.

END VERTICAL(S) MUST BE SHEATHED OR HAVE BRACES AS INDICATED IN THE MAX. UNBRACED LENGTH COLUMN OF THE TABLE BELOW

LOADING

TOTAL LOAD CASES: (4)

CHORDS MEMB. FR-TO	MAX. FACTORED FORCE (LBS)	FACTORED VERT. LOAD LC1 (PLF) FROM	TO	MAX CSI (LC)	MAX. UNBRAC LENGTH	WEBS MEMB. FR-TO	MAX. FACTORED FORCE (LBS)	MAX CSI (LC)
A- B	-460 / 0	-78.0	-78.0	0.20 (1)	6.25	G- B	-51 / 49	0.04 (1)
B- C	-292 / 0	-78.0	-78.0	0.19 (1)	6.25	B- F	-234 / 0	0.15 (1)
C- D	0 / 0	-78.0	-78.0	0.15 (1)	10.00	F- C	0 / 371	0.06 (1)
E- D	-130 / 0	0.0	0.0	0.08 (1)	6.25	C- E	-437 / 0	0.29 (1)
H- A	-549 / 0	0.0	0.0	0.08 (1)	7.81	A- G	0 / 296	0.07 (1)
H- G	0 / 4	-18.5	-18.5	0.09 (4)	10.00			
G- F	0 / 316	-18.5	-18.5	0.12 (4)	10.00			
F- E	0 / 131	-18.5	-18.5	0.10 (4)	10.00			

DESIGN CRITERIA

SPECIFIED LOADS:

TOP	CH.	LL	=	21.0	PSF
		DL	=	6.0	PSF
BOT	CH.	LL	=	0.0	PSF
		DL	=	7.4	PSF
TOTAL	LOAD		=	34.4	PSF

SPACING = 24.0 IN. C/C

LOADING IN FLAT SECTION BASED ON A SLOPE OF 2.00/12 MINIMUM

THIS TRUSS IS DESIGNED FOR RESIDENTIAL OR SMALL BUILDING REQUIREMENTS OF PART 9, NBCC 2015

THIS DESIGN COMPLIES WITH:
- PART 9 OF BCBC 2018 , ABC 2019
- PART 9 OF OBC 2012 (2019 AMENDMENT)
- CSA 086-14
- TPIC 2014

(55 % OF 23.0 P.S.F. G.S.L. PLUS 8.4 P.S.F. RAIN LOAD) EQUALS 21.0 P.S.F. SPECIFIED ROOF LIVE LOAD

ALLOWABLE DEFL.(LL)= L/360 (0.40")
CALCULATED VERT. DEFL.(LL) = L/ 999 (0.01")
ALLOWABLE DEFL.(TL)= L/360 (0.40")
CALCULATED VERT. DEFL.(TL) = L/ 999 (0.02")

CSI: TC=0.20/1.00 (A-B:1) , BC=0.12/1.00 (F-G:4) , WB=0.29/1.00 (C-E:1) , SSI=0.10/1.00 (C-D:1)

DOL LUMBER=1.00 NAIL=1.00 LS BEND=1.10 COMP=1.10 SHEAR=1.10 TENS= 1.10

COMPANION LIVE LOAD FACTOR = 1.00

TRUSS PLATE MANUFACTURER IS NOT RESPONSIBLE FOR QUALITY CONTROL IN THE TRUSS MANUFACTURING PLANT .

NAIL VALUES

PLATE	GRIP(DRY) (PSI) MAX	MIN	SHEAR (PLI) MAX	MIN	SECTION (PLI) MAX	MIN
MT20	650	371	1747	788	1987	1873

PLATE PLACEMENT TOL. = 0.250 inches

PLATE ROTATION TOL. = 5.0 Deg.

JSI GRIP= 0.42 (E) (INPUT = 0.90)
JSI METAL= 0.20 (H) (INPUT = 1.00)

JOB NAME	TRUSS NAME	QUANTITY	PLY	JOB DESC.	DRWG NO.
343177	H30		1	TRUSS DESC. JT 45147	E22052763

Alpa Roof Truss, Maple

Version 8.530 S Feb 23 2022 MiTek Industries, Inc. Tue Jun 7 11:59:50 2022 Page 1

ID: 01SUN7GZ3P25I3oMs5H1nyKJTP-PtQ7HCEoHPwg2a6irY9kIaBLfKgoTdfW3kHcFYz8hq7

Scale = 1:73.5

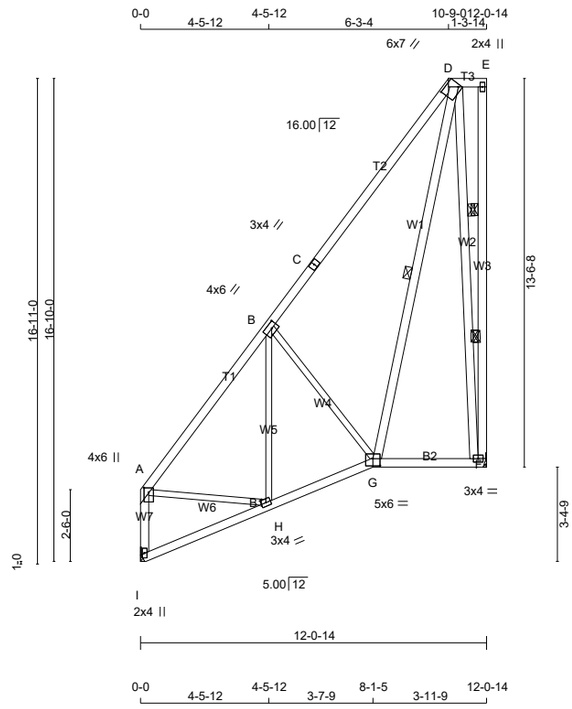

TOTAL WEIGHT = 2 X 97 = 194 lb

[M][F]

LUMBER

N. L. G. A. RULES

CHORDS	SIZE		LUMBER	DESCR.
A - C	2x4	DRY	No.2	SPF
C - D	2x4	DRY	No.2	SPF
D - E	2x4	DRY	No.2	SPF
F - E	2x4	DRY	No.2	SPF
I - A	2x4	DRY	No.2	SPF
I - G	2x4	DRY	No.2	SPF
G - F	2x4	DRY	No.2	SPF
ALL WEBS	2x3	DRY	No.2	SPF
EXCEPT				
G - D	2x4	DRY	No.2	SPF
D - F	2x4	DRY	No.2	SPF

DRY: SEASONED LUMBER.

PLATES (table is in inches)

JT	TYPE	PLATES	W	LEN	Y	X
A	TMVW+p	MT20	4.0	6.0	2.00	2.00
B	TMWW-t	MT20	4.0	6.0	2.00	2.50
C	TS-t	MT20	3.0	4.0		
D	TTWW-h	MT20	6.0	7.0	4.50	6.00
E	TMV+p	MT20	2.0	4.0		
F	BMVW1-t	MT20	3.0	4.0		
G	BBWW-l	MT20	5.0	6.0	3.00	3.00
H	BMWW-t	MT20	3.0	4.0		
I	BMV1+p	MT20	2.0	4.0		

LATERAL BRACE(S) SHOWN SHALL BE 2X4 SPF#2

LICENSED PROFESSIONAL ENGINEER
Y. WIDYA
100225448
06/07/2022
PROVINCE OF ONTARIO

DIMENSIONS, SUPPORTS AND LOADINGS SPECIFIED BY FABRICATOR TO BE VERIFIED BY BUILDING DESIGNER

BEARINGS

JT	FACTORED GROSS REACTION VERT	HORZ	MAXIMUM FACTORED GROSS REACTION DOWN	HORZ	UPLIFT	INPUT BRG	REQRD BRG
F	582	0	582	0	0	MECHANICAL	
I	582	0	582	0	0	MECHANICAL	

A SUITABLE HANGER/MECHANICAL CONNECTION IS REQUIRED AT JOINT F, I. MINIMUM BEARING LENGTH AT JOINT F = 1-8, JOINT I = 1-12.

UNFACTORED REACTIONS

JT	1ST LCASE COMBINED	MAX./MIN. COMPONENT REACTIONS SNOW	LIVE	PERM.LIVE	WIND	DEAD	SOIL
F	415	253 / 0	0 / 0	0 / 0	0 / 0	162 / 0	0 / 0
I	415	253 / 0	0 / 0	0 / 0	0 / 0	162 / 0	0 / 0

BRACING

TOP CHORD TO BE SHEATHED OR MAX. PURLIN SPACING = 6.25 FT.
MAX. UNBRACED BOTTOM CHORD LENGTH = 10.00 FT OR RIGID CEILING DIRECTLY APPLIED.

ALL PITCH BREAKS AND PERIMETER CORNER JOINTS MUST BE LATERALLY RESTRAINED.

2 LATERAL BRACE(S) AT 1/ 3 LENGTH OF E-F, D-F.
1 LATERAL BRACE(S) AT 1/ 2 LENGTH OF D-G.

END VERTICAL(S) MUST BE SHEATHED OR HAVE BRACES AS INDICATED IN THE MAX. UNBRACED LENGTH COLUMN OF THE TABLE BELOW

LOADING

TOTAL LOAD CASES: (4)

CHORDS

MEMB. FR-TO	MAX. FACTORED FORCE (LBS)	VERT. LOAD (PLF) FROM	TO	LC1 CSI (LC)	MAX UNBRAC LENGTH
A- B	-470 / 0	-78.0	-78.0	0.32 (1)	6.25
B- C	-264 / 0	-78.0	-78.0	0.38 (1)	6.25
C- D	-264 / 0	-78.0	-78.0	0.38 (1)	6.25
D- E	0 / 0	-78.0	-78.0	0.02 (1)	10.00
F- E	-52 / 0	0.0	0.0	0.02 (1)	6.25
I- A	-549 / 0	0.0	0.0	0.08 (1)	7.81
I- H	0 / 4	-18.5	-18.5	0.09 (4)	10.00
H- G	0 / 337	-18.5	-18.5	0.12 (4)	10.00
G- F	0 / 50	-18.5	-18.5	0.09 (4)	10.00

WEBS

MEMB. FR-TO	MAX. FACTORED FORCE (LBS)	MAX CSI (LC)
H- B	-61 / 47	0.04 (1)
B- G	-297 / 0	0.19 (1)
G- D	0 / 436	0.07 (1)
D- F	-497 / 0	0.22 (1)
A- H	0 / 315	0.07 (1)

DESIGN CRITERIA

SPECIFIED LOADS:

TOP CH.	LL	=	21.0	PSF
	DL	=	6.0	PSF
BOT CH.	LL	=	0.0	PSF
	DL	=	7.4	PSF
TOTAL LOAD		=	34.4	PSF

SPACING = 24.0 IN. C/C

LOADING IN FLAT SECTION BASED ON A SLOPE OF 2.00/12 MINIMUM

THIS TRUSS IS DESIGNED FOR RESIDENTIAL OR SMALL BUILDING REQUIREMENTS OF PART 9, NBCC 2015

THIS DESIGN COMPLIES WITH:
- PART 9 OF BCBC 2018 , ABC 2019
- PART 9 OF OBC 2012 (2019 AMENDMENT)
- CSA 086-14
- TPIC 2014

(55 % OF 23.0 P.S.F. G.S.L. PLUS 8.4 P.S.F. RAIN LOAD) EQUALS 21.0 P.S.F. SPECIFIED ROOF LIVE LOAD

ALLOWABLE DEFL.(LL)= L/360 (0.40")
CALCULATED VERT. DEFL.(LL) = L/ 999 (0.01")
ALLOWABLE DEFL.(TL)= L/360 (0.40")
CALCULATED VERT. DEFL.(TL) = L/ 999 (0.02")

CSI: TC=0.38/1.00 (B-D:1) , BC=0.12/1.00 (G-H:4) , WB=0.22/1.00 (D-F:1) , SSI=0.14/1.00 (B-D:1)

DOL LUMBER=1.00 NAIL=1.00 LS BEND=1.10 COMP=1.10 SHEAR=1.10 TENS= 1.10

COMPANION LIVE LOAD FACTOR = 1.00

TRUSS PLATE MANUFACTURER IS NOT RESPONSIBLE FOR QUALITY CONTROL IN THE TRUSS MANUFACTURING PLANT .

NAIL VALUES

PLATE	GRIP(DRY) (PSI) MAX	MIN	SHEAR (PLI) MAX	MIN	SECTION (PLI) MAX	MIN
MT20	650	371	1747	788	1987	1873

PLATE PLACEMENT TOL. = 0.250 inches

PLATE ROTATION TOL. = 5.0 Deg.

JSI GRIP= 0.65 (C) (INPUT = 0.90)
JSI METAL= 0.20 (I) (INPUT = 1.00)

JOB NAME	TRUSS NAME	QUANTITY	PLY	JOB DESC.	DRWG NO.
343177	H60T		1	TRUSS DESC. JT 45147	E22052764

Alpa Roof Truss, Maple

Version 8.530 S Feb 23 2022 MiTek Industries, Inc. Tue Jun 7 11:59:52 2022 Page 1

ID: 01SUN7GZ3P25I3oMs5H1nyKJTP-LGYtiuG2p0ANItF5zzCCO?GcS8HfxQFpX2miJRz8hq5

Scale = 1:56.3

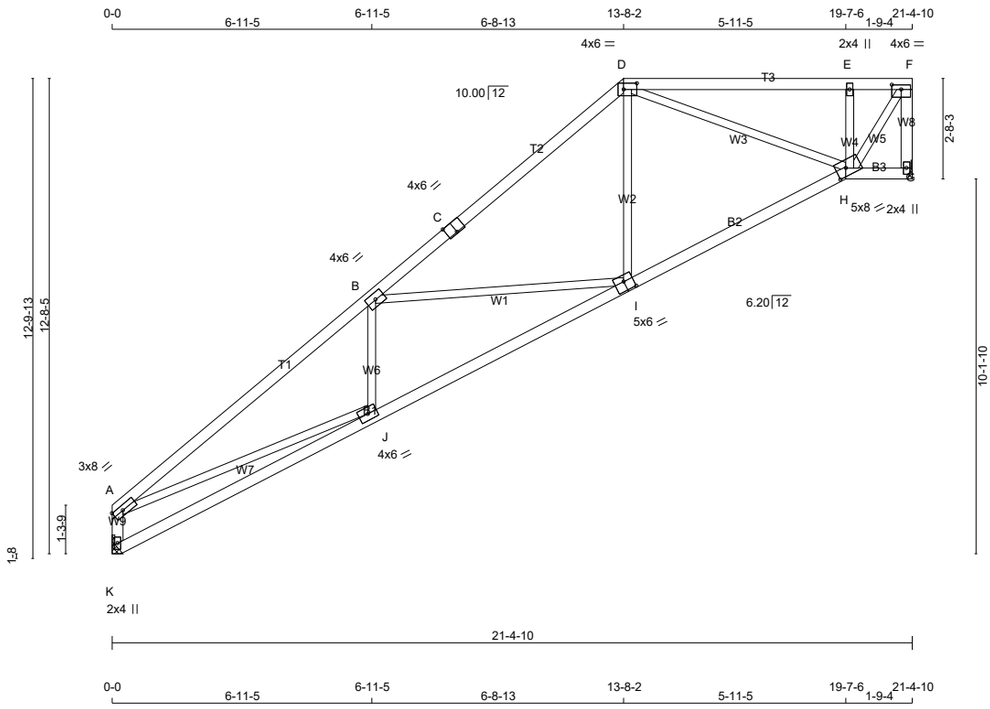

TOTAL WEIGHT = 87 lb

[M][F]

LUMBER

N. L. G. A. RULES

CHORDS	SIZE		LUMBER	DESCR.
A - C	2x4	DRY	No.2	SPF
C - D	2x4	DRY	No.2	SPF
D - F	2x4	DRY	No.2	SPF
G - F	2x4	DRY	No.2	SPF
K - A	2x4	DRY	No.2	SPF
K - I	2x4	DRY	No.2	SPF
I - H	2x4	DRY	No.2	SPF
H - G	2x4	DRY	No.2	SPF
ALL WEBS EXCEPT	2x3	DRY	No.2	SPF

DRY: SEASONED LUMBER.

PLATES (table is in inches)

JT	TYPE	PLATES	W	LEN	Y	X
A	TMVW-t	MT20	3.0	8.0		Edge
B	TMWW-t	MT20	4.0	6.0		
C	TS-t	MT20	4.0	6.0	Edge	3.00
D	TTWW-l	MT20	4.0	6.0	2.00	4.25
E	TMW+w	MT20	2.0	4.0		
F	TMVW-t	MT20	4.0	6.0	1.50	3.00
G	BMV1+p	MT20	2.0	4.0		
H	BBWWW-h	MT20	5.0	8.0	2.50	3.25
I	BSWW-l	MT20	5.0	6.0	3.00	3.00
J	BMWW-t	MT20	4.0	6.0		
K	BMV1+p	MT20	2.0	4.0		

Edge - INDICATES REFERENCE CORNER OF PLATE TOUCHES EDGE OF CHORD.

LATERAL BRACE(S) SHOWN SHALL BE 2X4 SPF#2

LICENSED PROFESSIONAL ENGINEER
Y. WIDYA
100225448
06/07/2022
PROVINCE OF ONTARIO

DIMENSIONS, SUPPORTS AND LOADINGS SPECIFIED BY FABRICATOR TO BE VERIFIED BY BUILDING DESIGNER

BEARINGS

JT	FACTORED GROSS REACTION VERT	HORZ	MAXIMUM GROSS REACTION DOWN	HORZ	FACTORED UPLIFT	INPUT BRG IN-SX	REQRD BRG IN-SX
G	1032	0	1032	0	0	MECHANICAL	
K	1032	0	1032	0	0	MECHANICAL	

A SUITABLE HANGER/MECHANICAL CONNECTION IS REQUIRED AT JOINT G, K. MINIMUM BEARING LENGTH AT JOINT G = 1-8, JOINT K = 2-14.

VALUE IN PARENTHESIS INDICATES EFFECTIVE BEARING LENGTH

UNFACTORED REACTIONS

JT	1ST LCASE COMBINED	MAX./MIN. COMPONENT REACTIONS SNOW	LIVE	PERM.LIVE	WIND	DEAD	SOIL
G	735	449 / 0	0 / 0	0 / 0	0 / 0	287 / 0	0 / 0
K	735	449 / 0	0 / 0	0 / 0	0 / 0	287 / 0	0 / 0

BRACING

TOP CHORD TO BE SHEATHED OR MAX. PURLIN SPACING = 4.05 FT.
MAX. UNBRACED BOTTOM CHORD LENGTH = 10.00 FT OR RIGID CEILING DIRECTLY APPLIED.

ALL PITCH BREAKS AND PERIMETER CORNER JOINTS MUST BE LATERALLY RESTRAINED.

LOADING

TOTAL LOAD CASES: (4)

CHORDS

MEMB. FR-TO	MAX. FACTORED FORCE (LBS)	FACTORED VERT. LOAD (PLF) FROM	TO	LC1 CSI (LC)	MAX UNBRAC LENGTH
A- B	-2100 / 0	-78.0	-78.0	0.68 (1)	4.05
B- C	-1255 / 0	-78.0	-78.0	0.54 (1)	5.08
C- D	-1255 / 0	-78.0	-78.0	0.54 (1)	5.08
D- E	-802 / 0	-78.0	-78.0	0.33 (1)	6.25
E- F	-824 / 0	-78.0	-78.0	0.28 (1)	6.25
G- F	-1015 / 0	0.0	0.0	0.14 (1)	7.77
K- A	-978 / 0	0.0	0.0	0.10 (1)	7.81
K- J	0 / 7	-18.5	-18.5	0.24 (4)	10.00
J- I	0 / 1842	-18.5	-18.5	0.41 (4)	10.00
I- H	0 / 1057	-18.5	-18.5	0.29 (4)	10.00
H- G	0 / 0	-18.5	-18.5	0.02 (4)	10.00

WEBS

MEMB. FR-TO	MAX. FACTORED FORCE (LBS)	MAX CSI (LC)
J- B	-97 / 77	0.03 (4)
B- I	-711 / 0	0.66 (1)
I- D	0 / 441	0.10 (1)
D- H	-148 / 0	0.11 (1)
H- E	-501 / 0	0.08 (1)
H- F	0 / 1381	0.31 (1)
A- J	0 / 1750	0.39 (1)

DESIGN CRITERIA

SPECIFIED LOADS:

TOP CH.	LL	=	21.0	PSF
	DL	=	6.0	PSF
BOT CH.	LL	=	0.0	PSF
	DL	=	7.4	PSF
TOTAL LOAD		=	34.4	PSF

SPACING = 24.0 IN. C/C

LOADING IN FLAT SECTION BASED ON A SLOPE OF 2.00/12 MINIMUM

THIS TRUSS IS DESIGNED FOR RESIDENTIAL OR SMALL BUILDING REQUIREMENTS OF PART 9, NBCC 2015

THIS DESIGN COMPLIES WITH:
- PART 9 OF BCBC 2018 , ABC 2019
- PART 9 OF OBC 2012 (2019 AMENDMENT)
- CSA 086-14
- TPIC 2014

(55 % OF 23.0 P.S.F. G.S.L. PLUS 8.4 P.S.F. RAIN LOAD) EQUALS 21.0 P.S.F. SPECIFIED ROOF LIVE LOAD

ALLOWABLE DEFL.(LL)= L/360 (0.71")
CALCULATED VERT. DEFL.(LL) = L/ 999 (0.08")
ALLOWABLE DEFL.(TL)= L/360 (0.71")
CALCULATED VERT. DEFL.(TL) = L/ 999 (0.19")

CSI: TC=0.68/1.00 (A-B:1) , BC=0.41/1.00 (I-J:4) , WB=0.66/1.00 (B-I:1) , SSI=0.22/1.00 (D-E:1)

DOL LUMBER=1.00 NAIL=1.00 LS BEND=1.10 COMP=1.10 SHEAR=1.10 TENS= 1.10

COMPANION LIVE LOAD FACTOR = 1.00

TRUSS PLATE MANUFACTURER IS NOT RESPONSIBLE FOR QUALITY CONTROL IN THE TRUSS MANUFACTURING PLANT .

NAIL VALUES

PLATE	GRIP(DRY) (PSI) MAX	MIN	SHEAR (PLI) MAX	MIN	SECTION (PLI) MAX	MIN
MT20	650	371	1747	788	1987	1873

PLATE PLACEMENT TOL. = 0.250 inches

PLATE ROTATION TOL. = 5.0 Deg.

JSI GRIP= 0.87 (F) (INPUT = 0.90)
JSI METAL= 0.42 (K) (INPUT = 1.00)

JOB NAME	TRUSS NAME	QUANTITY	PLY	JOB DESC.	DRWG NO.
343177	H61T		1	TRUSS DESC. JT 45147	E22052765

Alpa Roof Truss, Maple

Version 8.530 S Feb 23 2022 MiTek Industries, Inc. Tue Jun 7 11:59:53 2022 Page 1

ID: 01SUN7GZ3P25I3oMs5H1nyKJTP-pS6FvEHgaKIEv1qHXgjRwCogyXeugxwzliWGstz8hq4

Scale = 1:70.3

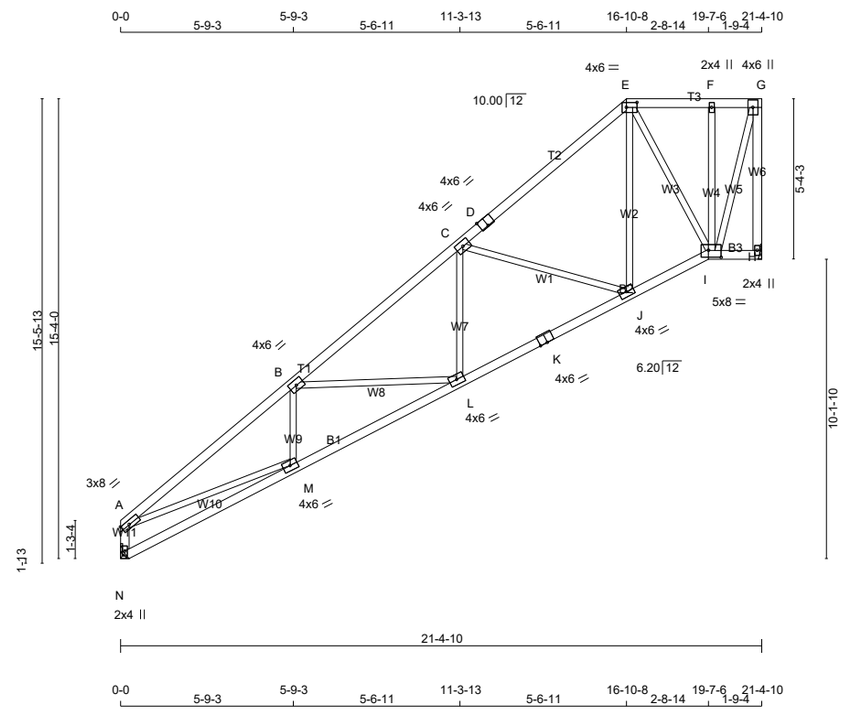

TOTAL WEIGHT = 101 lb

[M][F]

LUMBER

N. L. G. A. RULES

CHORDS	SIZE		LUMBER	DESCR.
A - D	2x4	DRY	No.2	SPF
D - E	2x4	DRY	No.2	SPF
E - G	2x4	DRY	No.2	SPF
H - G	2x4	DRY	No.2	SPF
N - A	2x4	DRY	No.2	SPF
N - K	2x4	DRY	No.2	SPF
K - I	2x4	DRY	No.2	SPF
I - H	2x4	DRY	No.2	SPF
ALL WEBS EXCEPT	2x3	DRY	No.2	SPF

DRY: SEASONED LUMBER.

PLATES (table is in inches)

JT	TYPE	PLATES	W	LEN	Y	X
A	TMVW-t	MT20	3.0	8.0		Edge
B	TMWW-t	MT20	4.0	6.0		
C	TMWW-t	MT20	4.0	6.0		
D	TS-t	MT20	4.0	6.0	Edge	3.00
E	TTWW-l	MT20	4.0	6.0	2.00	4.25
F	TMW+w	MT20	2.0	4.0		
G	TMVW+p	MT20	4.0	6.0		
H	BMV1+p	MT20	2.0	4.0		
I	BBWWW-p	MT20	5.0	8.0	2.75	5.00
J, L, M						
J	BMWW-t	MT20	4.0	6.0		
K	BS-t	MT20	4.0	6.0		
N	BMV1+p	MT20	2.0	4.0		

Edge - INDICATES REFERENCE CORNER OF PLATE TOUCHES EDGE OF CHORD.

LATERAL BRACE(S) SHOWN SHALL BE 2X4 SPF#2

LICENSED PROFESSIONAL ENGINEER
Y. WIDYA
100225448
06/07/2022
PROVINCE OF ONTARIO

DIMENSIONS, SUPPORTS AND LOADINGS SPECIFIED BY FABRICATOR TO BE VERIFIED BY BUILDING DESIGNER

BEARINGS

JT	FACTORED GROSS REACTION VERT	HORZ	MAXIMUM FACTORED GROSS REACTION DOWN	HORZ	UPLIFT	INPUT BRG	REQRD BRG
H	1032	0	1032	0	0	MECHANICAL	
N	1032	0	1032	0	0	MECHANICAL	

A SUITABLE HANGER/MECHANICAL CONNECTION IS REQUIRED AT JOINT H, N. MINIMUM BEARING LENGTH AT JOINT H = 1-8, JOINT N = 3-8.

UNFACTORED REACTIONS

JT	1ST LCASE COMBINED	MAX./MIN. COMPONENT REACTIONS SNOW	LIVE	PERM.LIVE	WIND	DEAD	SOIL
H	735	449 / 0	0 / 0	0 / 0	0 / 0	287 / 0	0 / 0
N	735	449 / 0	0 / 0	0 / 0	0 / 0	287 / 0	0 / 0

BRACING

TOP CHORD TO BE SHEATHED OR MAX. PURLIN SPACING = 4.36 FT.
MAX. UNBRACED BOTTOM CHORD LENGTH = 10.00 FT OR RIGID CEILING DIRECTLY APPLIED.

ALL PITCH BREAKS AND PERIMETER CORNER JOINTS MUST BE LATERALLY RESTRAINED.

LOADING

TOTAL LOAD CASES: (4)

CHORDS

MEMB. FR-TO	MAX. FACTORED FORCE (LBS)	FACTORED VERT. LOAD (PLF) FROM	TO	LC1 CSI (LC)	MAX UNBRAC LENGTH
A- B	-2058 / 0	-78.0	-78.0	0.42 (1)	4.36
B- C	-1615 / 0	-78.0	-78.0	0.32 (1)	4.92
C- D	-765 / 0	-78.0	-78.0	0.29 (1)	6.25
D- E	-765 / 0	-78.0	-78.0	0.29 (1)	6.25
E- F	-336 / 0	-78.0	-78.0	0.07 (1)	6.25
F- G	-341 / 0	-78.0	-78.0	0.04 (1)	6.25
H- G	-1015 / 0	0.0	0.0	0.51 (1)	7.77
N- A	-984 / 0	0.0	0.0	0.10 (1)	7.81
N- M	0 / 5	-18.5	-18.5	0.13 (4)	10.00
M- L	0 / 1795	-18.5	-18.5	0.35 (1)	10.00
L- K	0 / 1396	-18.5	-18.5	0.28 (1)	10.00
K- J	0 / 1396	-18.5	-18.5	0.28 (1)	10.00
J- I	0 / 642	-18.5	-18.5	0.15 (4)	10.00
I- H	0 / 0	-18.5	-18.5	0.02 (4)	10.00

WEBS

MEMB. FR-TO	MAX. FACTORED FORCE (LBS)	MAX CSI (LC)
M- B	-179 / 16	0.03 (1)
L- C	0 / 290	0.07 (1)
C- J	-706 / 0	0.44 (1)
J- E	0 / 638	0.14 (1)
E- I	-501 / 0	0.27 (1)
I- F	-208 / 0	0.09 (1)
I- G	0 / 1030	0.23 (1)
A- M	0 / 1687	0.38 (1)

DESIGN CRITERIA

SPECIFIED LOADS:

TOP CH.	LL	=	21.0	PSF
	DL	=	6.0	PSF
BOT CH.	LL	=	0.0	PSF
	DL	=	7.4	PSF
TOTAL LOAD		=	34.4	PSF

SPACING = 24.0 IN. C/C

LOADING IN FLAT SECTION BASED ON A SLOPE OF 2.00/12 MINIMUM

THIS TRUSS IS DESIGNED FOR RESIDENTIAL OR SMALL BUILDING REQUIREMENTS OF PART 9, NBCC 2015

THIS DESIGN COMPLIES WITH:
- PART 9 OF BCBC 2018 , ABC 2019
- PART 9 OF OBC 2012 (2019 AMENDMENT)
- CSA 086-14
- TPIC 2014

(55 % OF 23.0 P.S.F. G.S.L. PLUS 8.4 P.S.F. RAIN LOAD) EQUALS 21.0 P.S.F. SPECIFIED ROOF LIVE LOAD

ALLOWABLE DEFL.(LL)= L/360 (0.71")
CALCULATED VERT. DEFL.(LL) = L/ 999 (0.08")
ALLOWABLE DEFL.(TL)= L/360 (0.71")
CALCULATED VERT. DEFL.(TL) = L/ 999 (0.15")

CSI: TC=0.51/1.00 (G-H:1) , BC=0.35/1.00 (L-M:1) , WB=0.44/1.00 (C-J:1) , SSI=0.16/1.00 (A-B:1)

DOL LUMBER=1.00 NAIL=1.00 LS BEND=1.10 COMP=1.10 SHEAR=1.10 TENS= 1.10

COMPANION LIVE LOAD FACTOR = 1.00

TRUSS PLATE MANUFACTURER IS NOT RESPONSIBLE FOR QUALITY CONTROL IN THE TRUSS MANUFACTURING PLANT .

NAIL VALUES

PLATE	GRIP(DRY) (PSI) MAX	MIN	SHEAR (PLI) MAX	MIN	SECTION (PLI) MAX	MIN
MT20	650	371	1747	788	1987	1873

PLATE PLACEMENT TOL. = 0.250 inches

PLATE ROTATION TOL. = 5.0 Deg.

JSI GRIP= 0.83 (I) (INPUT = 0.90)
JSI METAL= 0.42 (N) (INPUT = 1.00)

JOB NAME	TRUSS NAME	QUANTITY	PLY	JOB DESC.	DRWG NO.
343177	H62T		1	TRUSS DESC. JT 45147	E22052766

Alpa Roof Truss, Maple

Version 8.530 S Feb 23 2022 MiTek Industries, Inc. Tue Jun 7 11:59:55 2022 Page 1

ID: 01SUN7GZ3P25I3oMs5H1nyKJTP-mrE0KvIw6xYy9L_ge5lv?du8YLIZ8mHFD0?Nwmz8hq2

Scale = 1:78.5

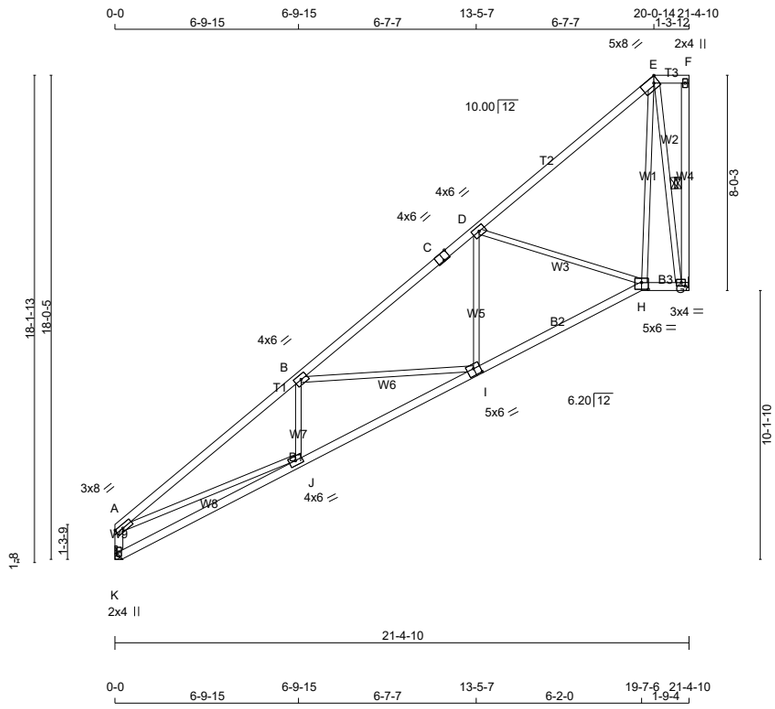

TOTAL WEIGHT = 103 lb

[M][F]

LUMBER

N. L. G. A. RULES

CHORDS	SIZE		LUMBER	DESCR.
A - C	2x4	DRY	No.2	SPF
C - E	2x4	DRY	No.2	SPF
E - F	2x4	DRY	No.2	SPF
G - F	2x4	DRY	No.2	SPF
K - A	2x4	DRY	No.2	SPF
K - I	2x4	DRY	No.2	SPF
I - H	2x4	DRY	No.2	SPF
H - G	2x4	DRY	No.2	SPF
ALL WEBS EXCEPT	2x3	DRY	No.2	SPF

DRY: SEASONED LUMBER.

PLATES (table is in inches)

JT	TYPE	PLATES	W	LEN	Y	X
A	TMVW-t	MT20	3.0	8.0		Edge
B	TMWW-t	MT20	4.0	6.0		
C	TS-t	MT20	4.0	6.0	Edge	3.00
D	TMWW-t	MT20	4.0	6.0		
E	TTWW-h	MT20	5.0	8.0	2.50	Edge
F	TMV+p	MT20	2.0	4.0		
G	BMVW1-t	MT20	3.0	4.0	1.50	1.75
H	BBWW-l	MT20	5.0	6.0	3.00	3.00
I	BSWW-l	MT20	5.0	6.0	3.00	3.00
J	BMWW-t	MT20	4.0	6.0		
K	BMV1+p	MT20	2.0	4.0		

Edge - INDICATES REFERENCE CORNER OF PLATE TOUCHES EDGE OF CHORD.

LATERAL BRACE(S) SHOWN SHALL BE 2X4 SPF#2

LICENSED PROFESSIONAL ENGINEER
Y. WIDYA
100225448
06/07/2022
PROVINCE OF ONTARIO

DIMENSIONS, SUPPORTS AND LOADINGS SPECIFIED BY FABRICATOR TO BE VERIFIED BY BUILDING DESIGNER

BEARINGS

JT	FACTORED GROSS REACTION VERT	HORZ	MAXIMUM FACTORED GROSS REACTION DOWN	HORZ	UPLIFT	INPUT BRG	REQRD BRG
G	1032	0	1032	0	0	MECHANICAL	
K	1032	0	1032	0	0	MECHANICAL	

A SUITABLE HANGER/MECHANICAL CONNECTION IS REQUIRED AT JOINT G, K. MINIMUM BEARING LENGTH AT JOINT G = 1-8, JOINT K = 2-14.

VALUE IN PARENTHESIS INDICATES EFFECTIVE BEARING LENGTH

UNFACTORED REACTIONS

JT	1ST LCASE COMBINED	MAX./MIN. COMPONENT REACTIONS SNOW	LIVE	PERM.LIVE	WIND	DEAD	SOIL
G	735	449 / 0	0 / 0	0 / 0	0 / 0	287 / 0	0 / 0
K	735	449 / 0	0 / 0	0 / 0	0 / 0	287 / 0	0 / 0

BRACING

TOP CHORD TO BE SHEATHED OR MAX. PURLIN SPACING = 4.16 FT.
MAX. UNBRACED BOTTOM CHORD LENGTH = 10.00 FT OR RIGID CEILING DIRECTLY APPLIED.

ALL PITCH BREAKS AND PERIMETER CORNER JOINTS MUST BE LATERALLY RESTRAINED.

1 LATERAL BRACE(S) AT 1/ 2 LENGTH OF F-G, E-G.

END VERTICAL(S) MUST BE SHEATHED OR HAVE BRACES AS INDICATED IN THE MAX. UNBRACED LENGTH COLUMN OF THE TABLE BELOW

LOADING

TOTAL LOAD CASES: (4)

CHORDS

MEMB. FR-TO	MAX. FACTORED FORCE (LBS)	FACTORED VERT. LOAD LC1 (PLF) FROM	TO	MAX CSI (LC)	MAX. UNBRAC LENGTH
A- B	-2074 / 0	-78.0	-78.0	0.63 (1)	4.16
B- C	-1340 / 0	-78.0	-78.0	0.43 (1)	5.15
C- D	-1340 / 0	-78.0	-78.0	0.43 (1)	5.15
D- E	-316 / 0	-78.0	-78.0	0.41 (1)	6.25
E- F	0 / 0	-78.0	-78.0	0.02 (1)	10.00
G- F	-51 / 0	0.0	0.0	0.01 (1)	6.25
K- A	-979 / 0	0.0	0.0	0.10 (1)	7.81
K- J	0 / 7	-18.5	-18.5	0.23 (4)	10.00
J- I	0 / 1811	-18.5	-18.5	0.40 (4)	10.00
I- H	0 / 1158	-18.5	-18.5	0.31 (4)	10.00
H- G	0 / 164	-18.5	-18.5	0.04 (1)	10.00

WEBS

MEMB. FR-TO	MAX. FACTORED FORCE (LBS)	MAX CSI (LC)
J- B	-100 / 73	0.03 (4)
I- D	0 / 392	0.09 (1)
D- H	-860 / 0	0.70 (1)
H- E	0 / 890	0.20 (1)
E- G	-979 / 0	0.40 (1)
A- J	0 / 1720	0.39 (1)

DESIGN CRITERIA

SPECIFIED LOADS:

TOP CH.	LL	=	21.0	PSF
	DL	=	6.0	PSF
BOT CH.	LL	=	0.0	PSF
	DL	=	7.4	PSF
TOTAL LOAD		=	34.4	PSF

SPACING = 24.0 IN. C/C

LOADING IN FLAT SECTION BASED ON A SLOPE OF 2.00/12 MINIMUM

THIS TRUSS IS DESIGNED FOR RESIDENTIAL OR SMALL BUILDING REQUIREMENTS OF PART 9, NBCC 2015

THIS DESIGN COMPLIES WITH:
- PART 9 OF BCBC 2018 , ABC 2019
- PART 9 OF OBC 2012 (2019 AMENDMENT)
- CSA 086-14
- TPIC 2014

(55 % OF 23.0 P.S.F. G.S.L. PLUS 8.4 P.S.F. RAIN LOAD) EQUALS 21.0 P.S.F. SPECIFIED ROOF LIVE LOAD

ALLOWABLE DEFL.(LL)= L/360 (0.71")
CALCULATED VERT. DEFL.(LL) = L/ 999 (0.08")
ALLOWABLE DEFL.(TL)= L/360 (0.71")
CALCULATED VERT. DEFL.(TL) = L/ 999 (0.19")

CSI: TC=0.63/1.00 (A-B:1) , BC=0.40/1.00 (I-J:4) , WB=0.70/1.00 (D-H:1) , SSI=0.19/1.00 (A-B:1)

DOL LUMBER=1.00 NAIL=1.00 LS BEND=1.10 COMP=1.10 SHEAR=1.10 TENS= 1.10

COMPANION LIVE LOAD FACTOR = 1.00

TRUSS PLATE MANUFACTURER IS NOT RESPONSIBLE FOR QUALITY CONTROL IN THE TRUSS MANUFACTURING PLANT .

NAIL VALUES

PLATE	GRIP(DRY) (PSI) MAX	MIN	SHEAR (PLI) MAX	MIN	SECTION (PLI) MAX	MIN
MT20	650	371	1747	788	1987	1873

PLATE PLACEMENT TOL. = 0.250 inches

PLATE ROTATION TOL. = 5.0 Deg.

JSI GRIP= 0.85 (G) (INPUT = 0.90)
JSI METAL= 0.42 (K) (INPUT = 1.00)

JOB NAME	TRUSS NAME	QUANTITY	PLY	JOB DESC.	DRWG NO.
343177	H63T		1	TRUSS DESC. JT 45147	E22052767

Alpa Roof Truss, Maple

Version 8.530 S Feb 23 2022 MiTek Industries, Inc. Tue Jun 7 11:59:56 2022 Page 1

ID: 01SUN7GZ3P25I3oMs5H1nyKJTP-E1oOXFJZtFgpmVZsCpG8YrQJplewtCjPSgkwSCz8hq1

Scale = 1:83.0

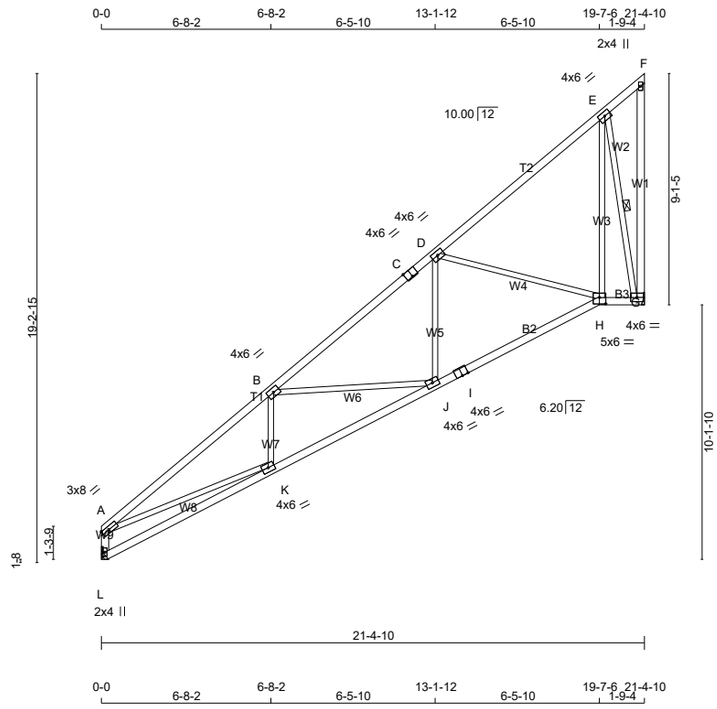

TOTAL WEIGHT = 8 X 104 = 835 lb

[M][F]

LUMBER

N. L. G. A. RULES

CHORDS	SIZE		LUMBER	DESCR.
L - A	2x4	DRY	No.2	SPF
A - C	2x4	DRY	No.2	SPF
C - F	2x4	DRY	No.2	SPF
G - F	2x4	DRY	No.2	SPF
L - I	2x4	DRY	No.2	SPF
I - H	2x4	DRY	No.2	SPF
H - G	2x4	DRY	No.2	SPF
ALL WEBS	2x3	DRY	No.2	SPF

DRY: SEASONED LUMBER.

PLATES (table is in inches)

JT	TYPE	PLATES	W	LEN	Y	X
A	TMVW-t	MT20	3.0	8.0		Edge
B, D, E						
B	TMWW-t	MT20	4.0	6.0		
C	TS-t	MT20	4.0	6.0	Edge	3.00
F	TMV+p	MT20	2.0	4.0		
G	BMVW1-t	MT20	4.0	6.0		
H	BBWW-l	MT20	5.0	6.0	3.00	3.00
I	BS-t	MT20	4.0	6.0		
J	BMWW-t	MT20	4.0	6.0		
K	BMWW-t	MT20	4.0	6.0		
L	BMV1+p	MT20	2.0	4.0		

Edge - INDICATES REFERENCE CORNER OF PLATE TOUCHES EDGE OF CHORD.

LATERAL BRACE(S) SHOWN SHALL BE 2X4 SPF#2

DIMENSIONS, SUPPORTS AND LOADINGS SPECIFIED BY FABRICATOR TO BE VERIFIED BY BUILDING DESIGNER

BEARINGS

JT	FACTORED GROSS REACTION VERT	HORZ	MAXIMUM FACTORED GROSS REACTION DOWN	HORZ	UPLIFT	INPUT BRG	REQRD BRG
L	1032	0	1032	0	0	MECHANICAL	
G	1032	0	1032	0	0	MECHANICAL	

A SUITABLE HANGER/MECHANICAL CONNECTION IS REQUIRED AT JOINT L, G. MINIMUM BEARING LENGTH AT JOINT L = 2-14, JOINT G = 1-8.

VALUE IN PARENTHESIS INDICATES EFFECTIVE BEARING LENGTH

UNFACTORED REACTIONS

JT	1ST LCASE COMBINED	MAX./MIN. COMPONENT REACTIONS SNOW	LIVE	PERM.LIVE	WIND	DEAD	SOIL
L	735	449 / 0	0 / 0	0 / 0	0 / 0	287 / 0	0 / 0
G	735	449 / 0	0 / 0	0 / 0	0 / 0	287 / 0	0 / 0

BRACING

TOP CHORD TO BE SHEATHED OR MAX. PURLIN SPACING = 4.19 FT.
MAX. UNBRACED BOTTOM CHORD LENGTH = 10.00 FT OR RIGID CEILING DIRECTLY APPLIED.

ALL PITCH BREAKS AND PERIMETER CORNER JOINTS MUST BE LATERALLY RESTRAINED.

1 LATERAL BRACE(S) AT 1/ 2 LENGTH OF E-G.

END VERTICAL(S) MUST BE SHEATHED OR HAVE BRACES AS INDICATED IN THE MAX. UNBRACED LENGTH COLUMN OF THE TABLE BELOW

LOADING

TOTAL LOAD CASES: (4)

CHORDS

MEMB. FR-TO	MAX. FACTORED FORCE (LBS)	FACTORED VERT. LOAD LC1 (PLF) FROM	TO	MAX CSI (LC)	MAX. UNBRAC LENGTH
L- A	-977 / 0	0.0	0.0	0.10 (1)	7.81
A- B	-2071 / 0	-78.0	-78.0	0.60 (1)	4.19
B- C	-1392 / 0	-78.0	-78.0	0.42 (1)	5.08
C- D	-1392 / 0	-78.0	-78.0	0.42 (1)	5.08
D- E	-333 / 0	-78.0	-78.0	0.32 (1)	6.25
E- F	-102 / 0	-78.0	-78.0	0.25 (1)	6.25
G- F	0 / 101	0.0	0.0	0.02 (1)	10.00
L- K	0 / 6	-18.5	-18.5	0.17 (4)	10.00
K- J	0 / 1815	-18.5	-18.5	0.39 (1)	10.00
J- I	0 / 1194	-18.5	-18.5	0.29 (1)	10.00
I- H	0 / 1194	-18.5	-18.5	0.29 (1)	10.00
H- G	0 / 221	-18.5	-18.5	0.05 (1)	10.00

WEBS

MEMB. FR-TO	MAX. FACTORED FORCE (LBS)	MAX CSI (LC)
A- K	0 / 1716	0.39 (1)
K- B	-126 / 49	0.03 (1)
B- J	-546 / 0	0.44 (1)
J- D	0 / 403	0.09 (1)
D- H	-847 / 0	0.75 (1)
H- E	0 / 854	0.19 (1)
E- G	-1139 / 0	0.45 (1)

DESIGN CRITERIA

SPECIFIED LOADS:

TOP CH.	LL	=	21.0	PSF
	DL	=	6.0	PSF
BOT CH.	LL	=	0.0	PSF
	DL	=	7.4	PSF
TOTAL LOAD		=	34.4	PSF

SPACING = 24.0 IN. C/C

THIS TRUSS IS DESIGNED FOR RESIDENTIAL OR SMALL BUILDING REQUIREMENTS OF PART 9, NBCC 2015

THIS DESIGN COMPLIES WITH:
- PART 9 OF BCBC 2018 , ABC 2019
- PART 9 OF OBC 2012 (2019 AMENDMENT)
- CSA 086-14
- TPIC 2014

(55 % OF 23.0 P.S.F. G.S.L. PLUS 8.4 P.S.F. RAIN LOAD) EQUALS 21.0 P.S.F. SPECIFIED ROOF LIVE LOAD

ALLOWABLE DEFL.(LL)= L/360 (0.71")
CALCULATED VERT. DEFL.(LL) = L/ 999 (0.08")
ALLOWABLE DEFL.(TL)= L/360 (0.71")
CALCULATED VERT. DEFL.(TL) = L/ 999 (0.17")

CSI: TC=0.60/1.00 (A-B:1) , BC=0.39/1.00 (J-K:1) , WB=0.75/1.00 (D-H:1) , SSI=0.19/1.00 (A-B:1)

DOL LUMBER=1.00 NAIL=1.00 LS BEND=1.10 COMP=1.10 SHEAR=1.10 TENS= 1.10

COMPANION LIVE LOAD FACTOR = 1.00

TRUSS PLATE MANUFACTURER IS NOT RESPONSIBLE FOR QUALITY CONTROL IN THE TRUSS MANUFACTURING PLANT .

NAIL VALUES

PLATE	GRIP(DRY) (PSI) MAX	MIN	SHEAR (PLI) MAX	MIN	SECTION (PLI) MAX	MIN
MT20	650	371	1747	788	1987	1873

PLATE PLACEMENT TOL. = 0.250 inches

PLATE ROTATION TOL. = 5.0 Deg.

JSI GRIP= 0.81 (A) (INPUT = 0.90)
JSI METAL= 0.42 (L) (INPUT = 1.00)

JOB NAME	TRUSS NAME	QUANTITY	PLY	JOB DESC.		DRWG NO.
343177	H64		2	TRUSS DESC.	JT 45147	E22052768

Alpa Roof Truss, Maple

Version 8.530 S Feb 23 2022 MiTek Industries, Inc. Tue Jun 7 11:59:58 2022 Page 1

ID: 01SUN7GZ3P25I3oMs5H1nyKJTP-AQv8yxKpPswX0ojEJEJcdGWirYH0L7aiv D1X5z8hq?

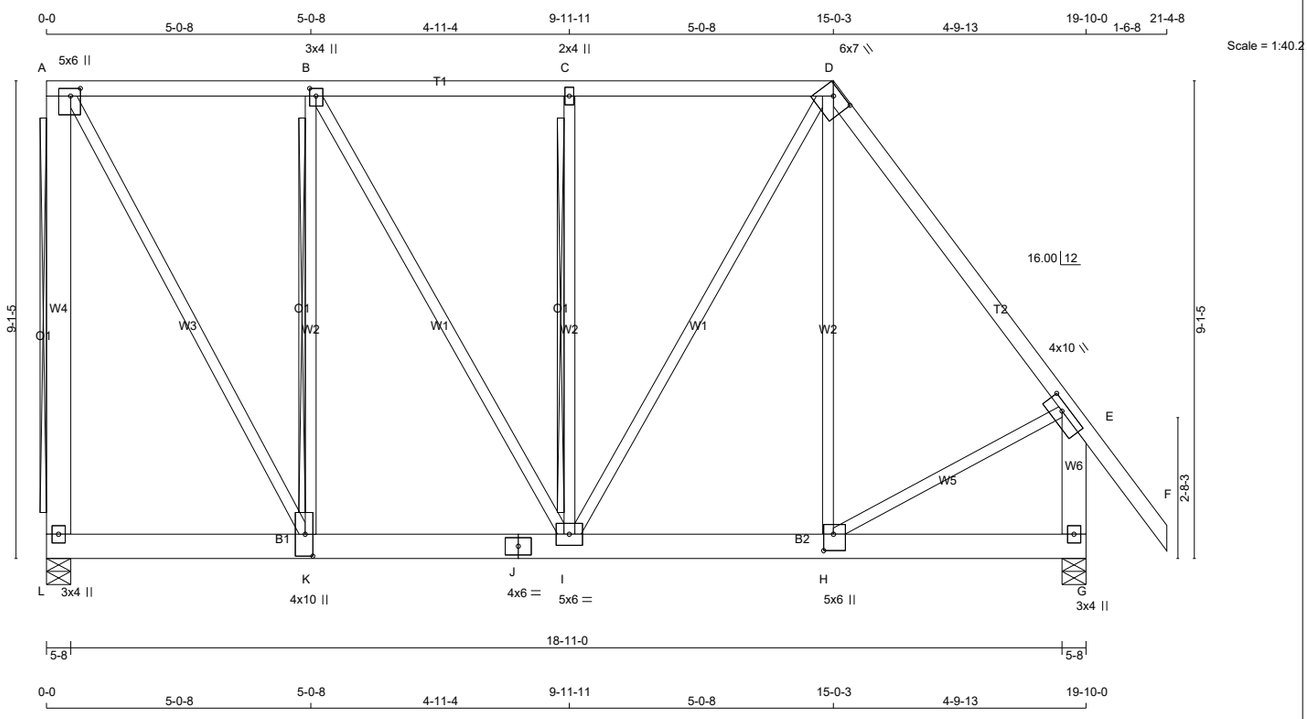

TOTAL WEIGHT = 2 X 132 = 264 lb [M]

LUMBER

N. L. G. A. RULES

CHORDS	SIZE		LUMBER	DESCR.
L - A	2x6	DRY	No.2	SPF
A - D	2x4	DRY	No.2	SPF
D - F	2x4	DRY	No.2	SPF
G - E	2x6	DRY	No.2	SPF
L - J	2x6	DRY	No.2	SPF
J - G	2x6	DRY	No.2	SPF
ALL WEBS EXCEPT	2x3	DRY	No.2	SPF

DRY: SEASONED LUMBER.

DESIGN CONSISTS OF 2 TRUSSES BUILT SEPARATELY THEN FASTENED TOGETHER AS FOLLOWS:

CHORDS #ROWS	SURFACE SPACING (IN)	LOAD(PLF)
TOP CHORDS : (0.122"X3") SPIRAL NAILS		
L- A 2	12	TOP
G- E 2	12	TOP
A- D 1	12	TOP
D- F 1	12	TOP
BOTTOM CHORDS : (0.122"X3") SPIRAL NAILS		
L- J 2	12	SIDE(233.8)
J- G 2	12	SIDE(233.8)
WEBS : (0.122"X3") SPIRAL NAILS		
2x3 1	6	

NAILS TO BE DRIVEN FROM ONE SIDE ONLY.

TOP - COMPONENTS ARE LOADED FROM THE TOP AND MUST BE PLACED ON TOP EDGE OF ALL PLIES FOR THE LOAD TO BE TRANSFERRED TO EACH PLY.

SIDE - PLF SHOWN IS THE EQUIVALENT UDL APPLIED TO ONE SIDE THAT THE CORRESPONDING NAILING PATTERN SHALL BE CAPABLE OF TRANSFERING. REMAINING PLF MUST BE APPLIED ON THE OPPOSITE SIDE OR ON THE TOP.

PLATES (table is in inches)

JT	TYPE	PLATES	W	LEN	Y	X
A	TMVW+p	MT20	5.0	6.0	1.75	2.25
B	TMWW+t	MT20	3.0	4.0	1.75	1.50
C	TMW+w	MT20	2.0	4.0		
D	TTWW-h	MT20	6.0	7.0	1.75	4.00
E	TMVW-t	MT20	4.0	10.0	1.50	4.00
G	BMV1+p	MT20	3.0	4.0		
H	BMWW+t	MT20	5.0	6.0	3.75	2.25
I	BMWWW-t	MT20	5.0	6.0		
J	BS-t	MT20	4.0	6.0		
K	BMWW+t	MT20	4.0	10.0	5.00	1.75
L	BMV1+p	MT20	3.0	4.0		

LATERAL BRACE(S) SHOWN SHALL BE 2X4 SPF#2

LICENSED PROFESSIONAL ENGINEER
Y. WIDYA
100225448
06/07/2022
PROVINCE OF ONTARIO

DIMENSIONS, SUPPORTS AND LOADINGS SPECIFIED BY FABRICATOR TO BE VERIFIED BY BUILDING DESIGNER

BEARINGS

JT	FACTORED GROSS REACTION VERT	HORZ	MAXIMUM FACTORED GROSS REACTION DOWN	HORZ	UPLIFT	INPUT BRG	REQRD BRG
L	5593	0	5593	0	0	5-8	3-9
G	5722	0	5722	0	0	5-8	3-13

UNFACTORED REACTIONS

JT	1ST LCASE COMBINED	MAX./MIN. COMPONENT REACTIONS SNOW	LIVE	PERM.LIVE	WIND	DEAD	SOIL
L	3988	2434 / 0	0 / 0	0 / 0	0 / 0	1554 / 0	0 / 0
G	4077	2503 / 0	0 / 0	0 / 0	0 / 0	1574 / 0	0 / 0

BEARING MATERIAL TO BE SPF NO.2 OR BETTER AT JOINT(S) L, G

BRACING

TOP CHORD TO BE SHEATHED OR MAX. PURLIN SPACING = 4.44 FT.
MAX. UNBRACED BOTTOM CHORD LENGTH = 10.00 FT OR RIGID CEILING DIRECTLY APPLIED.

ALL PITCH BREAKS AND PERIMETER CORNER JOINTS MUST BE LATERALLY RESTRAINED.

2x6 DRY SPF No.2 T-BRACE AT A-L
2x4 DRY SPF No.2 T-BRACE AT B-K, C-I

FASTEN T AND I-BRACES TO NARROW EDGE OF WEB WITH ONE ROW PER PLY OF 3" COMMON WIRE NAILS @ 6" O.C. WITH 3" MINIMUM END DISTANCE. BRACE MUST COVER 90% OF WEB LENGTH.

END VERTICAL(S) MUST BE SHEATHED OR HAVE BRACES AS INDICATED IN THE MAX. UNBRACED LENGTH COLUMN OF THE TABLE BELOW

LOADING

TOTAL LOAD CASES: (4)

CHORDS

MEMB. FR-TO	MAX. FORCE (LBS)	FACTORED VERT. LOAD (PLF) FROM	TO	LC1 MAX CSI (LC)	MAX. UNBRAC LENGTH
L- A	-4606 / 0	0.0	0.0	0.43 (1)	7.81
A- B	-2563 / 0	-78.0	-78.0	0.17 (1)	5.50
B- C	-3283 / 0	-78.0	-78.0	0.18 (1)	4.98
C- D	-3283 / 0	-78.0	-78.0	0.18 (1)	4.98
D- E	-4155 / 0	-78.0	-78.0	0.38 (1)	4.44
E- F	0 / 52	-78.0	-78.0	0.08 (1)	10.00
G- E	-4764 / 0	0.0	0.0	0.24 (1)	6.63
L- K	0 / 0	-486.0	-486.0	0.44 (1)	10.00
K- J	0 / 2563	-486.0	-486.0	0.61 (1)	10.00
J- I	0 / 2563	-486.0	-486.0	0.61 (1)	10.00
I- H	0 / 2500	-486.0	-486.0	0.59 (1)	10.00
H- G	0 / 0	-486.0	-486.0	0.43 (1)	10.00

WEBS

MEMB. FR-TO	MAX. FORCE (LBS)	MAX CSI (LC)
K- A	0 / 5128	0.63 (1)
K- B	-1694 / 0	0.67 (1)
B- I	0 / 1463	0.18 (1)
I- C	-392 / 0	0.15 (1)
I- D	0 / 1559	0.19 (1)
H- D	0 / 1602	0.20 (1)
H- E	0 / 2720	0.34 (1)

DESIGN CRITERIA

SPECIFIED LOADS:

TOP CH.	LL	=	21.0	PSF
	DL	=	6.0	PSF
BOT CH.	LL	=	0.0	PSF
	DL	=	7.4	PSF
TOTAL LOAD		=	34.4	PSF

SPACING = 24.0 IN. C/C

LOADING IN FLAT SECTION BASED ON A SLOPE OF 2.00/12 MINIMUM

GIRDER TYPE: CStdGirder
START DISTANCE = 0-0
START SPAN CARRIED = 21-4-10
END DISTANCE = 19-10-0
END SPAN CARRIED = 21-4-10
END WALL WIDTH = 0-0
APPLIED TO FRONT SIDE OF BOTTOM CHORD.
- ADDT'L LOADS BASED ON 55 % OF GSL.

THIS TRUSS IS DESIGNED FOR RESIDENTIAL OR SMALL BUILDING REQUIREMENTS OF PART 9, NBCC 2015

THIS DESIGN COMPLIES WITH:
- PART 9 OF BCBC 2018 , ABC 2019
- PART 9 OF OBC 2012 (2019 AMENDMENT)
- CSA 086-14
- TPIC 2014

(55 % OF 23.0 P.S.F. G.S.L. PLUS 8.4 P.S.F. RAIN LOAD) EQUALS 21.0 P.S.F. SPECIFIED ROOF LIVE LOAD

ALLOWABLE DEFL.(LL)= L/360 (0.66")
CALCULATED VERT. DEFL.(LL) = L/ 999 (0.06")
ALLOWABLE DEFL.(TL)= L/360 (0.66")
CALCULATED VERT. DEFL.(TL) = L/ 999 (0.11")

CSI: TC=0.43/1.00 (A-L:1) , BC=0.61/1.00 (I-K:1) , WB=0.67/1.00 (B-K:1) , SSI=0.48/1.00 (K-L:1)

DOL LUMBER=1.00 NAIL=1.00 LS BEND=1.00 COMP=1.00 SHEAR=1.00 TENS= 1.00

COMPANION LIVE LOAD FACTOR = 1.00

AUTOSOLVE LEFT HEEL ONLY

TRUSS PLATE MANUFACTURER IS NOT RESPONSIBLE FOR QUALITY CONTROL IN THE TRUSS MANUFACTURING PLANT .

NAIL VALUES

PLATE	GRIP(DRY) (PSI) MAX	MIN	SHEAR (PLI) MAX	MIN	SECTION (PLI) MAX	MIN
MT20	650	371	1747	788	1987	1873

PLATE PLACEMENT TOL. = 0.250 inches

PLATE ROTATION TOL. = 5.0 Deg.

JSI GRIP= 0.88 (E) (INPUT = 0.90)
JSI METAL= 0.58 (K) (INPUT = 1.00)

JOB NAME	TRUSS NAME	QUANTITY	PLY	JOB DESC.	DRWG NO.
343177	H65		1	TRUSS DESC. JT 45147	E22052769

Alpa Roof Truss, Maple

Version 8.530 S Feb 23 2022 MiTek Industries, Inc. Tue Jun 7 11:59:59 2022 Page 1

ID: 01SUN7GZ3P25I3oMs5H1nyKJTP-ecTWAHLRAA2OdylRtxqrAT2pEyjw4e7r8eza3Xz8hq_

Scale = 1:46.8

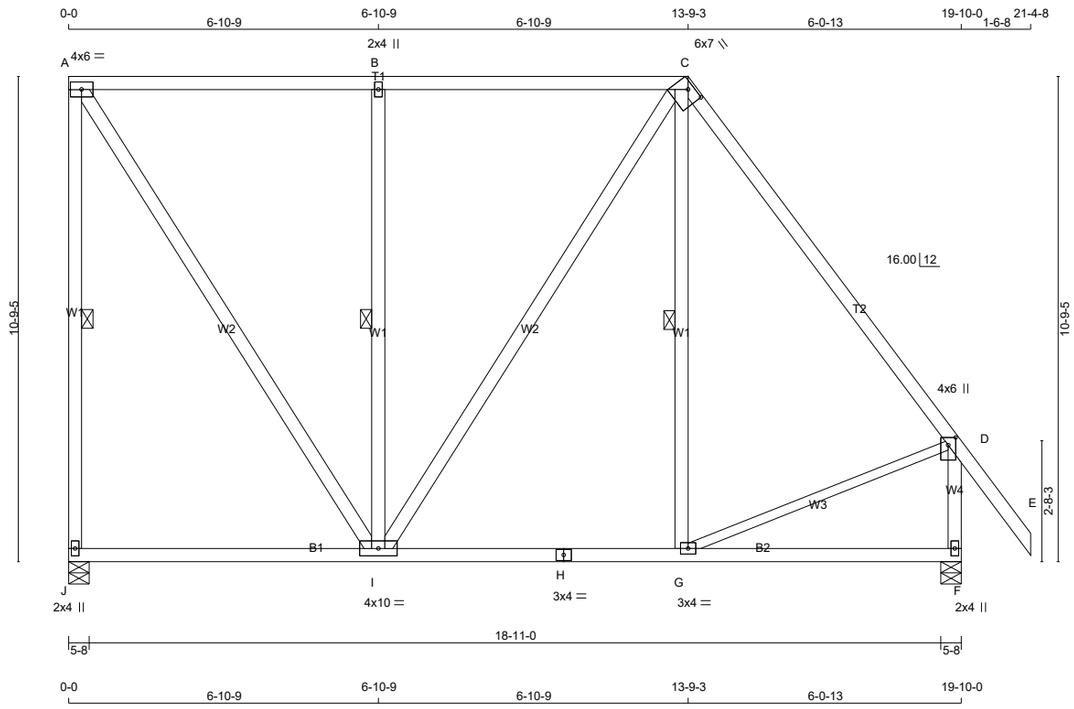

TOTAL WEIGHT = 123 lb

[M]

LUMBER

N. L. G. A. RULES

CHORDS	SIZE		LUMBER	DESCR.
J - A	2x4	DRY	No.2	SPF
A - C	2x4	DRY	No.2	SPF
C - E	2x4	DRY	2100F 1.8E	SPF
F - D	2x4	DRY	No.2	SPF
J - H	2x4	DRY	No.2	SPF
H - F	2x4	DRY	No.2	SPF
ALL WEBS	2x4	DRY	No.2	SPF
EXCEPT				
G - D	2x3	DRY	No.2	SPF

DRY: SEASONED LUMBER.

PLATES (table is in inches)

JT	TYPE	PLATES	W	LEN	Y	X
A	TMVW-t	MT20	4.0	6.0		
B	TMW+w	MT20	2.0	4.0		
C	TTWW-h	MT20	6.0	7.0	1.50	3.75
D	TMVW+p	MT20	4.0	6.0	2.00	2.00
F	BMV1+p	MT20	2.0	4.0		
G	BMWW-t	MT20	3.0	4.0		
H	BS-t	MT20	3.0	4.0		
I	BMWWW-t	MT20	4.0	10.0		
J	BMV1+p	MT20	2.0	4.0		

LATERAL BRACE(S) SHOWN SHALL BE 2X4 SPF#2

LICENSED PROFESSIONAL ENGINEER
Y. WIDYA
100225448
06/07/2022
PROVINCE OF ONTARIO

DIMENSIONS, SUPPORTS AND LOADINGS SPECIFIED BY FABRICATOR TO BE VERIFIED BY BUILDING DESIGNER

BEARINGS

JT	FACTORED GROSS REACTION VERT	HORZ	MAXIMUM FACTORED GROSS REACTION DOWN	HORZ	UPLIFT	INPUT BRG IN-SX	REQRD BRG IN-SX
J	957	0	957	0	0	5-8	1-8
F	1086	0	1086	0	0	5-8	1-8

UNFACTORED REACTIONS

JT	1ST LCASE COMBINED	MAX./MIN. COMPONENT REACTIONS SNOW	LIVE	PERM.LIVE	WIND	DEAD	SOIL
J	682	416 / 0	0 / 0	0 / 0	0 / 0	266 / 0	0 / 0
F	772	486 / 0	0 / 0	0 / 0	0 / 0	286 / 0	0 / 0

BEARING MATERIAL TO BE SPF NO.2 OR BETTER AT JOINT(S) J, F

BRACING

TOP CHORD TO BE SHEATHED OR MAX. PURLIN SPACING = 6.25 FT.
MAX. UNBRACED BOTTOM CHORD LENGTH = 10.00 FT OR RIGID CEILING DIRECTLY APPLIED.

ALL PITCH BREAKS AND PERIMETER CORNER JOINTS MUST BE LATERALLY RESTRAINED.

1 LATERAL BRACE(S) AT 1/ 2 LENGTH OF A-J, B-I, C-G.

END VERTICAL(S) MUST BE SHEATHED OR HAVE BRACES AS INDICATED IN THE MAX. UNBRACED LENGTH COLUMN OF THE TABLE BELOW

LOADING

TOTAL LOAD CASES: (4)

CHORDS MEMB. FR-TO	MAX. FACTORED FORCE (LBS)	FACTORED VERT. LOAD (PLF) FROM	TO	LC1 MAX CSI (LC)	MAX. UNBRAC LENGTH	WEBS MEMB. FR-TO	MAX. FACTORED FORCE (LBS)	MAX CSI (LC)
J- A	-905 / 0	0.0	0.0	0.53 (1)	6.25	A- I	0 / 841	0.14 (1)
A- B	-461 / 0	-78.0	-78.0	0.65 (1)	6.25	I- B	-665 / 0	0.39 (1)
B- C	-461 / 0	-78.0	-78.0	0.65 (1)	6.25	I- C	0 / 122	0.02 (1)
C- D	-660 / 0	-78.0	-78.0	0.36 (1)	6.25	G- C	-15 / 87	0.02 (4)
D- E	0 / 52	-78.0	-78.0	0.10 (1)	10.00	G- D	0 / 420	0.09 (1)
F- D	-1040 / 0	0.0	0.0	0.15 (1)	7.71			
J- I	0 / 0	-18.5	-18.5	0.20 (4)	10.00			
I- H	0 / 394	-18.5	-18.5	0.24 (4)	10.00			
H- G	0 / 394	-18.5	-18.5	0.24 (4)	10.00			
G- F	0 / 0	-18.5	-18.5	0.17 (4)	10.00			

DESIGN CRITERIA

SPECIFIED LOADS:

TOP CH.	LL	=	21.0	PSF
	DL	=	6.0	PSF
BOT CH.	LL	=	0.0	PSF
	DL	=	7.4	PSF
TOTAL LOAD		=	34.4	PSF

SPACING = 24.0 IN. C/C

LOADING IN FLAT SECTION BASED ON A SLOPE OF 2.00/12 MINIMUM

THIS TRUSS IS DESIGNED FOR RESIDENTIAL OR SMALL BUILDING REQUIREMENTS OF PART 9, NBCC 2015

THIS DESIGN COMPLIES WITH:
- PART 9 OF BCBC 2018 , ABC 2019
- PART 9 OF OBC 2012 (2019 AMENDMENT)
- CSA 086-14
- TPIC 2014

(55 % OF 23.0 P.S.F. G.S.L. PLUS 8.4 P.S.F. RAIN LOAD) EQUALS 21.0 P.S.F. SPECIFIED ROOF LIVE LOAD

ALLOWABLE DEFL.(LL)= L/360 (0.66")
CALCULATED VERT. DEFL.(LL) = L/ 999 (0.02")
ALLOWABLE DEFL.(TL)= L/360 (0.66")
CALCULATED VERT. DEFL.(TL) = L/ 999 (0.07")

CSI: TC=0.65/1.00 (A-B:1) , BC=0.24/1.00 (G-I:4) , WB=0.39/1.00 (B-I:1) , SSI=0.26/1.00 (A-B:1)

DOL LUMBER=1.00 NAIL=1.00 LS BEND=1.10 COMP=1.10 SHEAR=1.10 TENS= 1.10

COMPANION LIVE LOAD FACTOR = 1.00

TRUSS PLATE MANUFACTURER IS NOT RESPONSIBLE FOR QUALITY CONTROL IN THE TRUSS MANUFACTURING PLANT .

NAIL VALUES

PLATE	GRIP(DRY) (PSI) MAX	MIN	SHEAR (PLI) MAX	MIN	SECTION (PLI) MAX	MIN
MT20	650	371	1747	788	1987	1873

PLATE PLACEMENT TOL. = 0.250 inches

PLATE ROTATION TOL. = 5.0 Deg.

JSI GRIP= 0.81 (G) (INPUT = 0.90)
JSI METAL= 0.30 (D) (INPUT = 1.00)

LUS – Double Shear Joist Hangers

SIMPSON Strong-Tie®

All LUS hangers have double shear nailing. This patented innovation distributes the load through two points on each joist nail for greater strength. It also allows the use of fewer nails, faster installation and the use of common nails for all connections.

Material: 18 gauge

Finish: G90 galvanized

Design:

- Factored resistances are in accordance with CSA O86-14.
- Uplift resistances have been increased 15%. No further increase is permitted.
- Wood shear is not considered in the factored resistances given. The specifier must ensure that the joist and header capacities are capable of withstanding these loads.

Installation:

- Use all specified fasteners.
- Nails: 16d = 0.162" dia. x 3½" long common wire, 10d = 0.148" x 3" long common wire.
- Double shear nails must be driven at an angle through the joist or truss into the header to achieve the table loads.
- Not designed for welded or nailer applications.

Options:

- These hangers cannot be modified

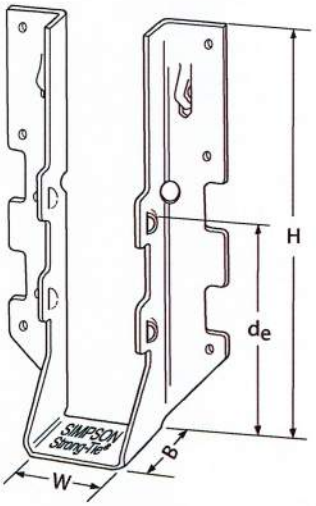

LUS28

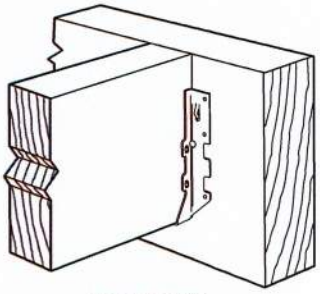

Typical LUS Installation

Model No.	Ga.	Dimensions (in.)				Fasteners		Factored Resistance (lb.)			
								D.Fir-L		S-P-F	
		W	H	B	d_e[1]	Face	Joist	Uplift (K_D=1.15)	Normal (K_D=1.00)	Uplift (K_D=1.15)	Normal (K_D=1.00)
LUS24	18	1 9/16	3 1/8	1 3/4	1 15/16	(4) 10d	(2) 10d	710	1630	645	1155
LUS24-2	18	3 1/8	3 1/8	2	1 13/16	(4) 16d	(2) 16d	835	2020	590	1435
LUS26	18	1 9/16	4 3/4	1 3/4	3 5/8	(4) 10d	(4) 10d	1420	2170	1290	1630
LUS26-2	18	3 1/8	4 7/8	2	4	(4) 16d	(4) 16d	1720	2595	1545	1920
LUS26-3	18	4 5/8	4 3/16	2	3 1/4	(4) 16d	(4) 16d	1720	2595	1545	2340
LUS28	18	1 9/16	6 5/8	1 3/4	3 3/4	(6) 10d	(6) 10d	1420	2520	1290	1790
LUS28-2	18	3 1/8	7	2	4	(6) 16d	(4) 16d	1720	3325	1545	2575
LUS28-3	18	4 5/8	6 1/4	2	3 1/4	(6) 16d	(4) 16d	1720	3325	1545	2375
LUS210	18	1 9/16	7 13/16	1 3/4	3 7/8	(8) 10d	(4) 10d	1420	2785	1290	2210
LUS210-2	18	3 1/8	9	2	6	(8) 16d	(6) 16d	2580	4500	2320	3195
LUS210-3	18	4 5/8	8 3/16	2	5 1/4	(8) 16d	(6) 16d	2580	3345	2320	2375

1. d_e is the distance from the seat of the hanger to the highest joist nail.

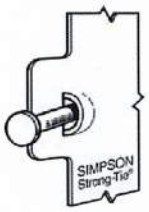

Dome Double Shear Nailing prevents tabs breaking off (available on some models).

U.S. Patent 5,603,580

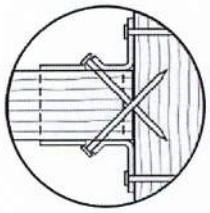

Double Shear Nailing Top View.

LICENSED PROFESSIONAL ENGINEER
04/01/2020
B. D. BUNTING
PROVINCE OF ONTARIO

LIMIT STATES DESIGN

This technical bulletin is effective until June 30, 2022, and reflects information available as of April 1, 2020. This information is updated periodically and should not be relied upon after June 30, 2022. Contact Simpson Strong-Tie for current information and limited warranty or see strongtie.com.

© 2020 Simpson Strong-Tie Company Inc.

(800) 999-5099
strongtie.com

TECHNICAL BULLETIN

HUS/LJS – Double Shear Joist Hangers

SIMPSON Strong-Tie®

All hangers have double shear nailing. This patented innovation distributes the load through two points on each joist nail for greater strength. It also allows the use of fewer nails, faster installation and the use of common nails for all connections. Do not bend or remove tabs.

Material: See table

Finish: G90 galvanized

Design:

- Factored resistances are in accordance with CSA O86 -14.
- Uplift resistances have been increased 15%. No further increase is permitted.
- Wood shear is not considered in the factored resistances given. The specifier must ensure that the joist and header capacities are capable of withstanding these loads.

Installation:

- Use all specified fasteners
- Nails: 16d = 0.162" dia. x 3½" long common wire
- Double shear nails must be driven at an angle through the joist or truss into the header to achieve the table loads
- Not designed for welded or nailer applications

Options:

- See current catalogue for options

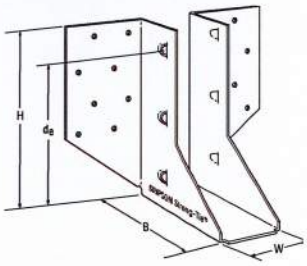

LJS26DS

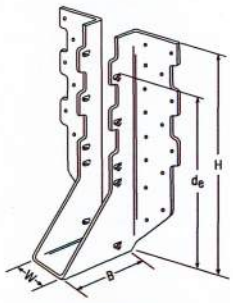

HUS210
(HUS26, HUS28, similar)

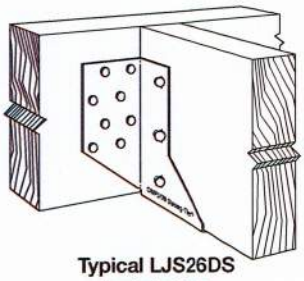

Typical LJS26DS Installation

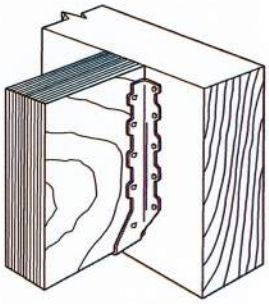

Typical HUS Installation

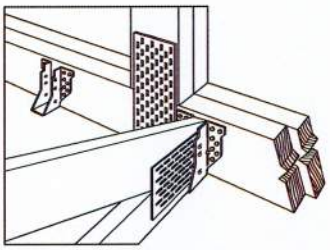

Typical HUS Installation
(Truss Designer to provide fastener quantity for connecting multiple members together)

Model No.	Ga.	Dimensions (in.)				Fasteners		Factored Resistance (lb.)			
								D.Fir-L		S-P-F	
		W	H	B	d_e[1]	Face	Joist	Uplift (K_D=1.15) lb.	Normal (K_D=1.00) lb.	Uplift (K_D=1.15) lb.	Normal (K_D=1.00) lb.
LJS26DS	18	1 9/16	5	3½	4⅝	(16) 16d	(6) 16d	2055	4265	1460	4115
HUS26	16	1⅝	5⅜	3	3 15/16	(14) 16d	(6) 16d	2705	4940	2065	3875
HUS28	16	1⅝	7 3/32	3	6 3/32	(22) 16d	(8) 16d	3605	5365	2675	4345
HUS210	16	1⅝	9 3/32	3	7 31/32	(30) 16d	(10) 16d	4505	5795	4010	4740
HUS1.81/10	16	1 13/16	9	3	8	(30) 16d	(10) 16d	4505	6450	4010	5200

1. d_e is the distance from the seat of the hanger to the highest joist nail.

Dome Double Shear Nailing prevents tabs breaking off (available on some models).

U.S. Patent 5,603,580

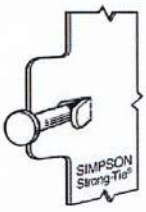

Double Shear Nailing Side View. Do not bend tab back.

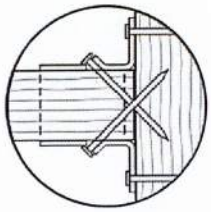

Double Shear Nailing Top View.

LIMIT STATES DESIGN

This technical bulletin is effective until June 30, 2022, and reflects information available as of April 1, 2020. This information is updated periodically and should not be relied upon after June 30, 2022. Contact Simpson Strong-Tie for current information and limited warranty or see strongtie.com.

© 2020 Simpson Strong-Tie Company Inc.

(800) 999-5099
strongtie.com

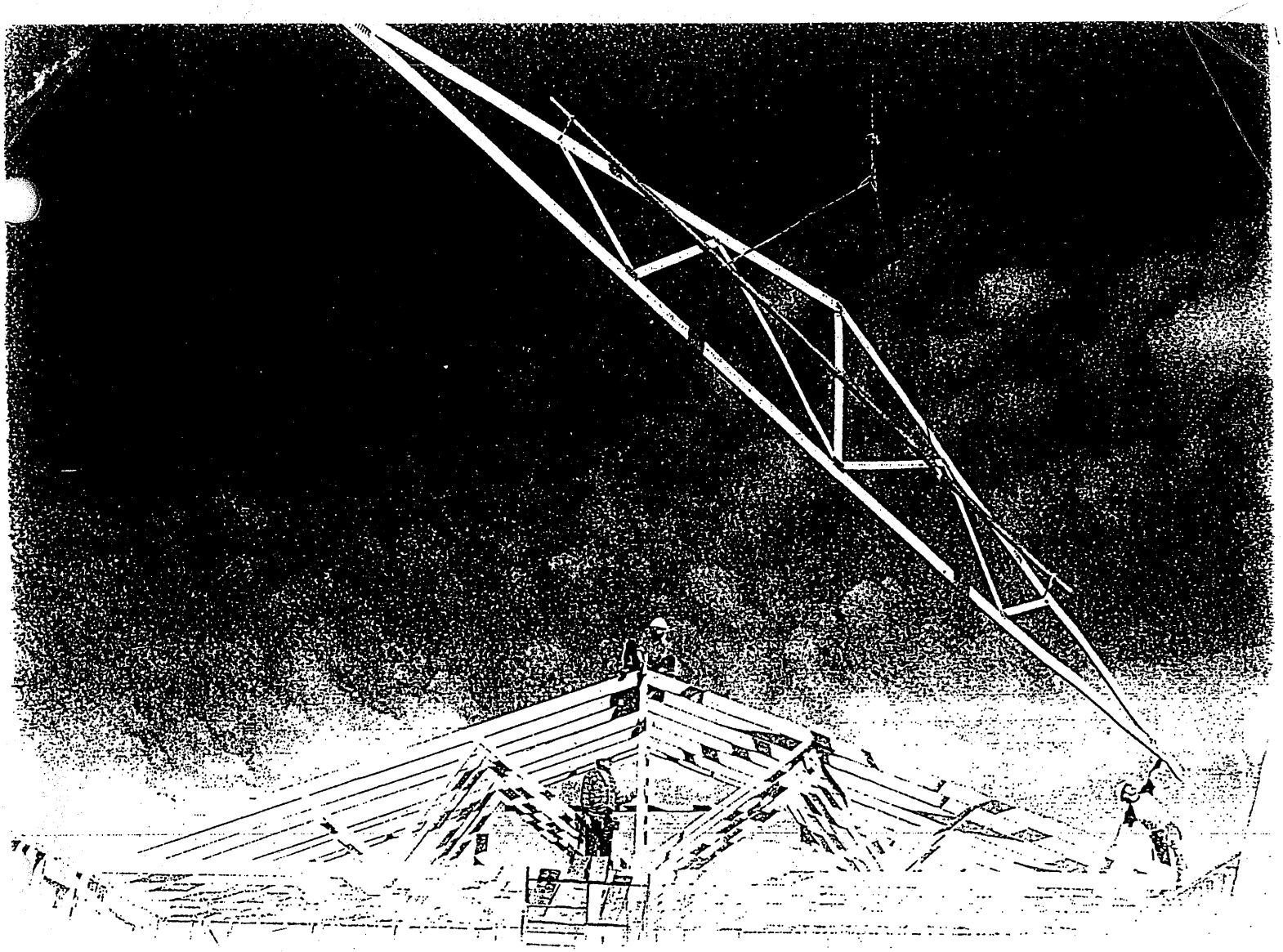

Wood Truss Installation

A Guide to proper handling, erecting and bracing metal plate connected wood trusses

Table of Content

Warning.....4

1 Unloading & Lifting.....5

2 Job Site Handling.....5

3 Hoisting.....6

4 Beginning the Erection Process.....7

5 Erection Tolerance.....8

6 Bracing.....8

7 Bracing Requirements for 3 Planes of Roof.....9

8 Stacking Materials.....10

Caution Notes.....11

Warning

General

Familiarity with the **Construction Design Documents**, the **Truss Design Drawings**, and **Truss Placement Plans** (if required by the **Construction Design Documents**) is required to properly erect, brace, and connect the trusses to the building system.

All of the care and quality involved in the design and manufacture of wood trusses can be jeopardized if the trusses are not properly handled, erected, and braced.

The consequences of improper handling, erecting, and bracing may be a collapse of the structure, which at best is a substantial loss of time and materials, and at worst is a loss of life. The majority of truss accidents occur during truss installation and not as a result of improper design or manufacture.

Prior to truss erection, the builder/erector shall meet with the erection crew for a safety and planning meeting, making sure each crew member understands his or her roles and responsibilities during the erection process.

Temporary Erection Bracing

Trusses are not marked in any way to identify the frequency, or location of temporary erection bracing.

All temporary bracing shall comply with the latest edition of *Commentary and Recommendations for Handling, Installing & Bracing Metal Plate Connected Wood Trusses* (HIB), published by the Truss Plate Institute, and/or as specified in the **Construction Design Documents** prepared by the building designer.

Permanent Truss Bracing

Permanent bracing for the roof or floor trusses is the responsibility of the building designer and should be shown on the **Construction Design Documents**. Permanent bracing locations for individual compression members of a wood truss are shown on the **Truss Design Drawings**, and shall be installed by the building or erection contractor. This bracing is needed for the proper performance of individual trusses within the roof or floor system. The design and connection of the bracing to the truss and then to the overall building system is the responsibility of the building designer, and is in addition to the permanent bracing plan, which is also specified by the building designer.

Special Design Requirements

Special design requirements, such as wind bracing, portal bracing, seismic bracing, diaphragms, shear walls, or other load transfer elements and their connections to wood trusses must be considered separately by the building designer, who shall determine size, location, and method of connections for all bracing as needed to resist these forces.

1 Unloading & Lifting

Never handle trusses flat

Beginning with the unloading process, and throughout all phases of construction, care must be taken to avoid **lateral bending** of trusses, which can cause damage to the lumber and metal connector plates at the joints.

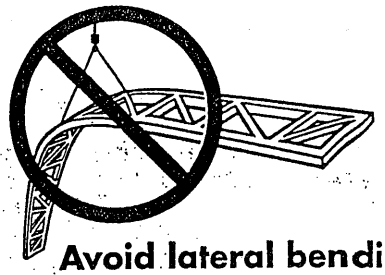

Avoid lateral bending

- **Use special care in windy weather.**
- **If using a crane within 10 feet of an electric line, contact the local power company.**
- **If using a crane within 5 miles of an airport, contact the airport 30 days prior to erection to learn about any safety regulations that must be followed.**

2 Job Site Handling

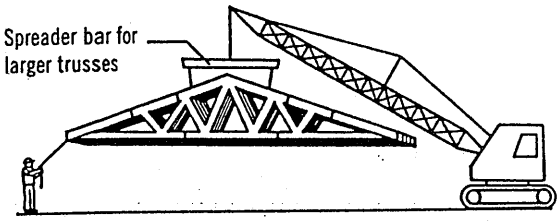

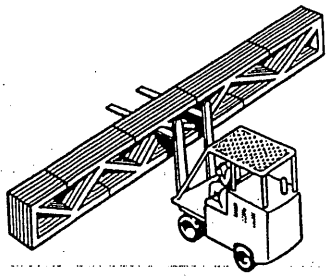

All trusses should be picked up at the top chords in a vertical position only

Proper banding and smooth ground allow for unloading of trusses without damage. This should be done as close to the building site as possible to minimize handling. **Do not** break banding until installation begins. Hand erection of trusses is allowed, provided excessive lateral bending is prevented.

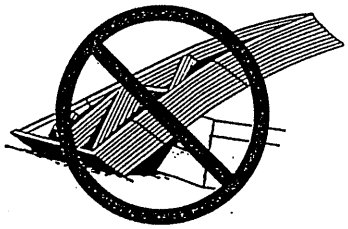

Do not store unbraced bundles upright

If trusses are stored vertically they shall be braced in a manner that will prevent tipping or topping. Generally cuting of the banding is done just prior to installation.

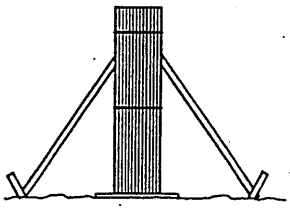

Do not store on uneven ground

If trusses are stored horizontally, blocking should be used on eight to ten foot centers, or as required, to minimize lateral bending and moisture gain.

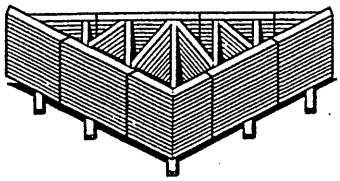

Care should be exercised when removing banding to avoid damaging trusses.

During long term storage, trusses shall be protected from the environment in a manner that provides for adequate ventilation of the trusses. If tarpaulins or other material is used, the ends shall be left open for ventilation. Plastic is not recommended, since it can trap moisture.

3 Hoisting

All trusses that are erected one at a time shall be held safely in position by the erection equipment until such time as all necessary bracing has been installed and the ends of the trusses are securely fastened to the building.

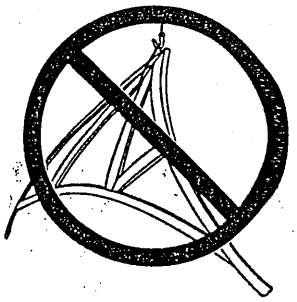

Avoid lateral bending

L ≤ 30'

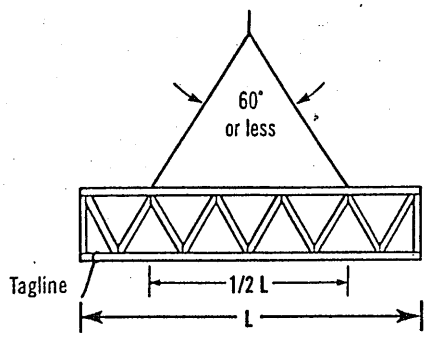

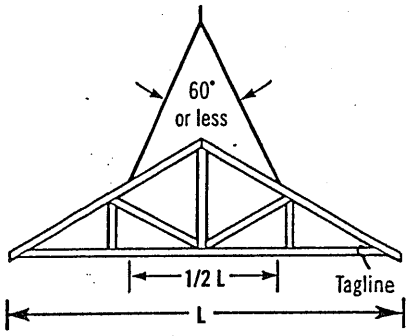

Truss sling is acceptable where these criteria are met.

30' < L ≤ 60'

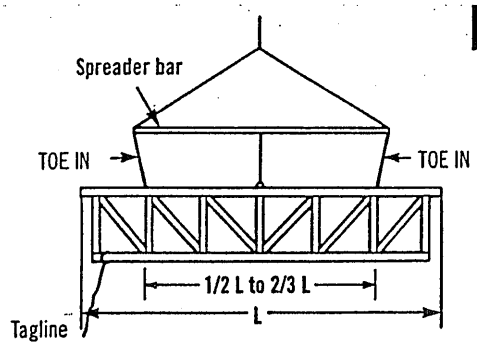

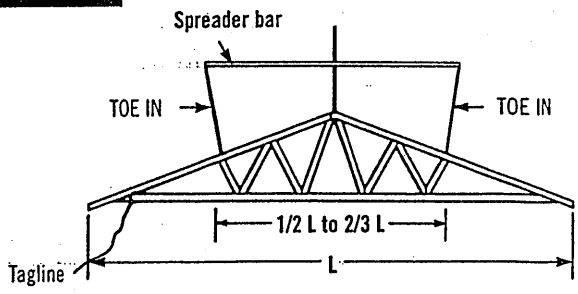

Use spreader bar in all other cases. It should be noted that the lines from the ends of the spreader bar "**TOE IN**"; if these lines should "**TOE OUT**" the truss may fold in half.

L > 60'

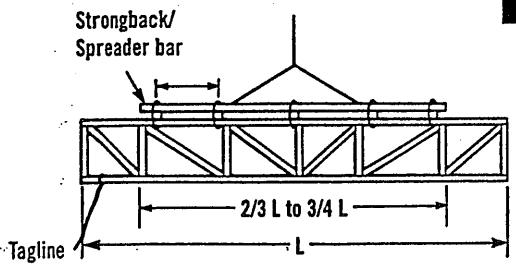

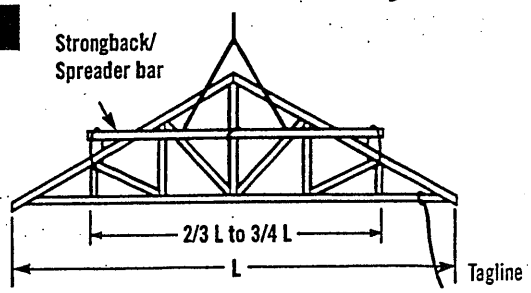

For lifting trusses with spans in excess of 60 feet, it is recommended that a strongback/spreader bar be used as illustrated. The strongback/spreader bar should be attached to the top chord and web members at intervals of approximately 10 feet. Further, the strongback/spreader bar should be at or above the mid-height of the truss to prevent overturning. The strongback/spreader bar can be of any material with sufficient strength to safely carry the weight of the truss and sufficient rigidity to adequately resist bending of the truss.

4 Beginning the Erection Process

It is important for the builder or erection contractor to provide substantial bracing for the first truss erected. The two or more trusses making up the rest of the first set are tied to and rely upon the first truss for stability. Likewise, after this first set of trusses is adequately cross-braced, the remaining trusses installed rely upon this first set for stability. Thus, the performance of the truss bracing system depends to a great extent on how well the first group of trusses is braced.

Ground Brace – Exterior

One satisfactory method ties the first unit of trusses off to a series of braces that are attached to a stake driven into the ground and securely anchored. The ground brace itself should be supported as shown below or it is apt to buckle. Additional ground braces in the opposite direction, inside the building, are also recommended.

Ground Brace – Interior

Another satisfactory method where height of building or ground conditions prohibit bracing from the exterior is to tie the first truss rigidly in place from the interior at the floor level, provided the floor is substantially completed and capable of supporting the ground bracing forces. Securely fasten the first truss to the middle of the building. Brace the bracing similar to exterior ground bracing shown at left. Set trusses from the middle toward the end of the building. Properly cross-brace the first set of trusses before removing floor braces and setting remaining trusses.

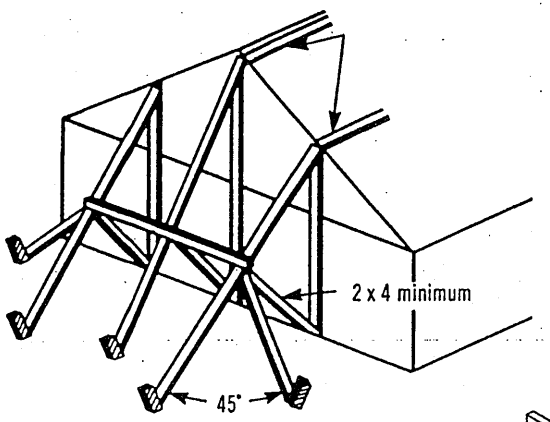

Note: Locate ground braces for first truss directly in line with all rows of top chord continuous lateral bracing (either temporary or permanent).

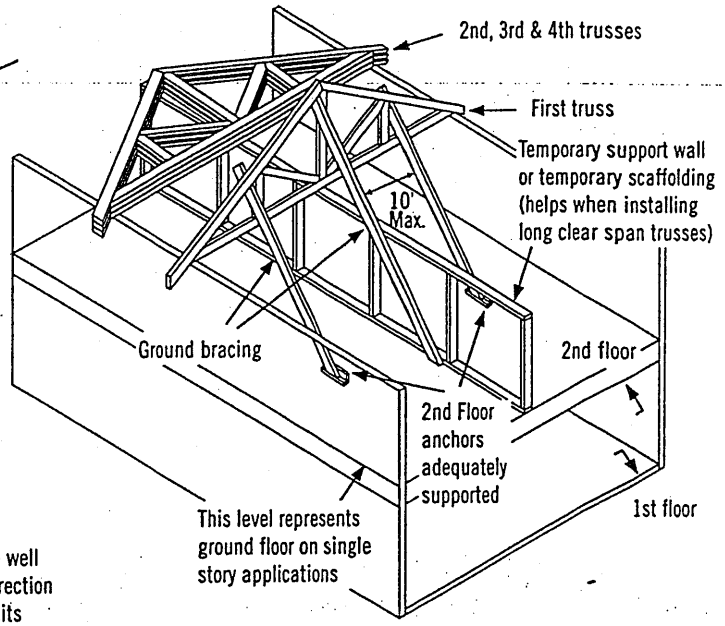

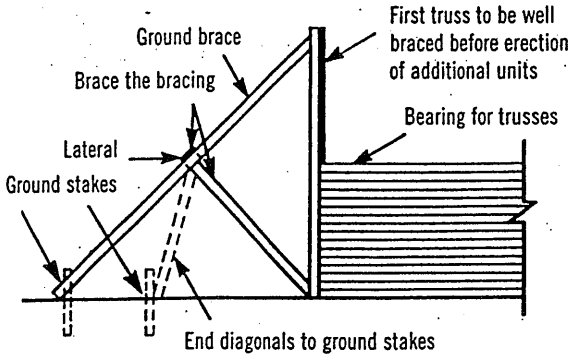

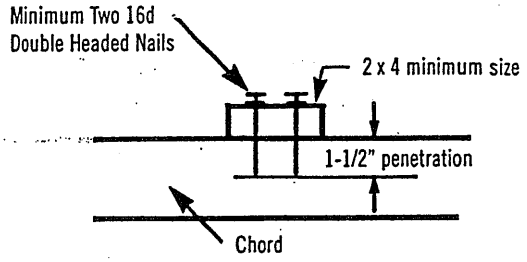

Inadequate size of bracing material or inadequate fastening is a major cause of erection dominoing.

5 Erection Tolerance

Complying with erection tolerances is critical to achieving an acceptable roof or floor line, and to accomplishing effective bracing. Setting trusses within tolerance the first time will prevent the need for the hazardous practice of respacing or adjusting trusses when roof sheathing or roof purlins are installed. Trusses leaning or bowing can cause nails to miss the top chords when sheathing is applied, and create cumulative stresses on the bracing, which is a frequent cause of dominoing.

When sheathing, make sure nails are driven into the top chord of the trusses.

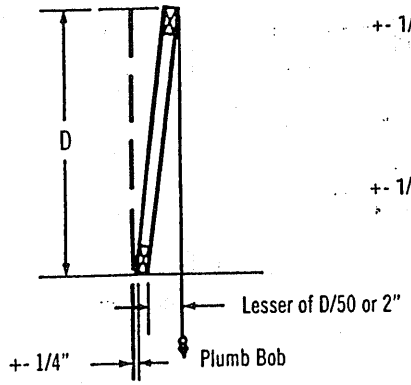

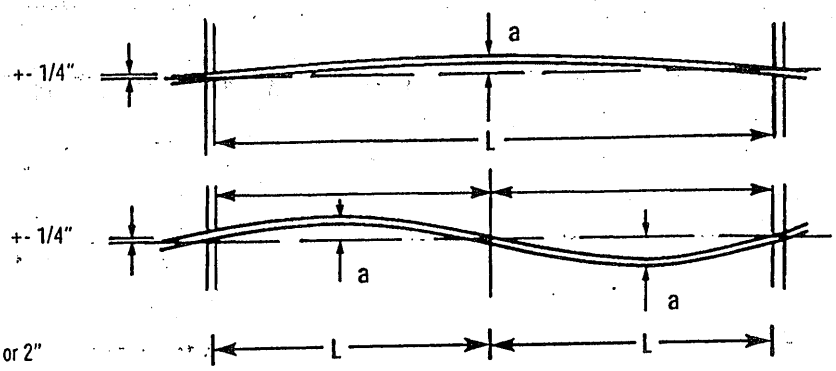

L = 16' to 32', a = 1"
L = 32' & over, a = 2"

6 Bracing

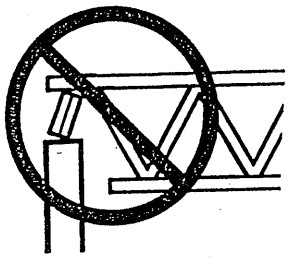

Do not install trusses on temporarily connected supports

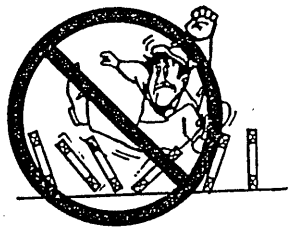

Do not walk on unbraced trusses

Do not walk on trusses or gable ends lying flat

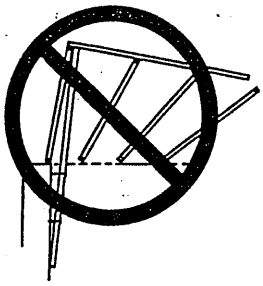

Nails in withdrawal (parallel to force)

All anchors, hangers, tie-downs, seats, bearing ledgers, etc., that are part of the supporting structure shall be accurately and properly placed and permanently attached before truss installation begins. No trusses shall ever be installed on anchors or ties that have temporary connections to the supporting structure.

Nailing scabs to the end of the building to brace the first truss is not recommended.
All nailing of bracing should be done so that nails are driven perpendicular to the direction of force, as shown at right.

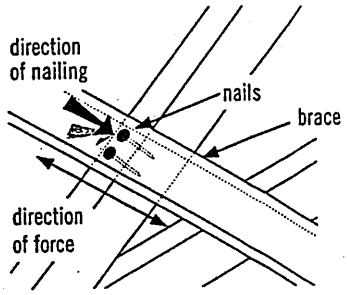

Well nailed (perpendicular to force)

7 Bracing Requirements for 3 Planes of Roof

Temporary erection bracing must be applied to three planes of the roof system to ensure stability: Plane 1) **Top Chord** (sheathing), Plane 2) **Bottom Chord** (ceiling plane), and Plane 3) **Web Member** plane or vertical plane perpendicular to trusses.

1) Top Chord Plane

Most important to the builder or erection contractor is bracing in the plane of the top chord. Truss top chords are susceptible to lateral buckling before they are braced or sheathed.

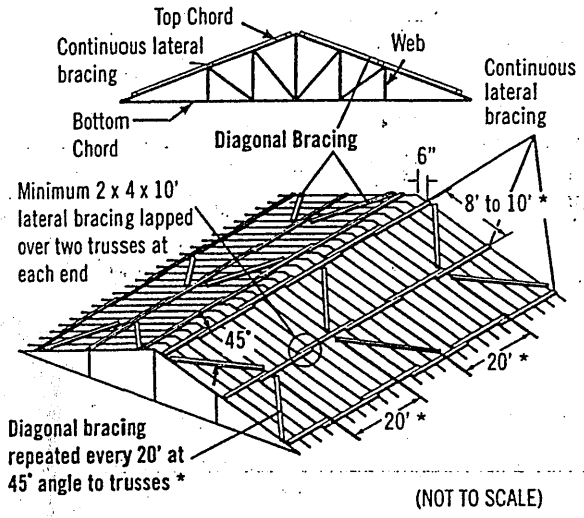

(NOT TO SCALE)

Exact spacing between trusses should be maintained as bracing is installed to avoid the hazardous practice of removing bracing to adjust spacing. This act of "adjusting spacing" can cause trusses to topple if connections are removed at the wrong time.

2) Bottom Chord Plane

In order to hold proper spacing on the bottom chord, temporary bracing is recommended on the top of the bottom chord.

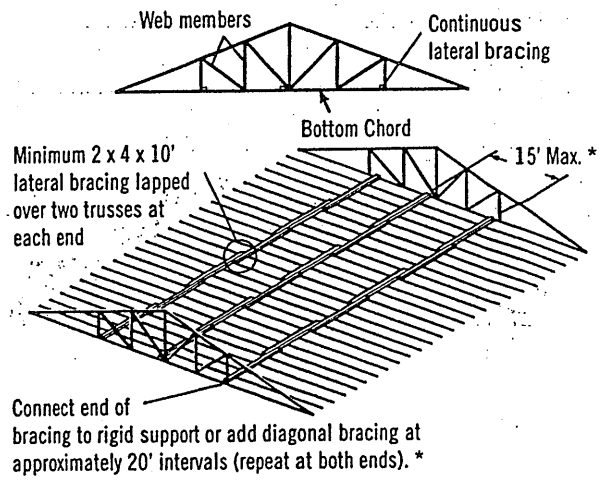

* Long spans, heavy loads or other spacing configurations may require closer spacing between lateral bracing and closer intervals between diagonals. Consult the building designer or HIB and DSB (*Recommended Design Specification for Temporary Bracing of Metal-Plate Connected Wood Trusses*) for details.

Diagonal or cross-bracing is very important!

3) Web Member Plane

"X" bracing, as shown, is critical in preventing trusses from leaning or dominoing. Repeat as shown to create a succession of rigid units.

X-bracing should be installed on vertical web members wherever possible, at or near lateral bracing. Plywood or OSB may be substituted for X-bracing.

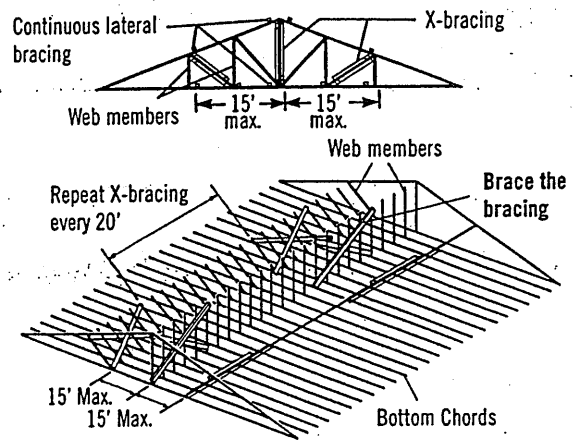

Note: Top chords and some web members are not shown, in order to make drawings more readable.

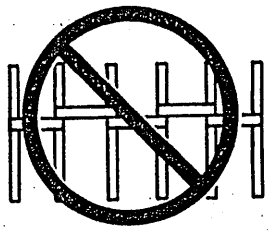

Do not use short blocks to brace individual trusses without a specific bracing plan detailing their use

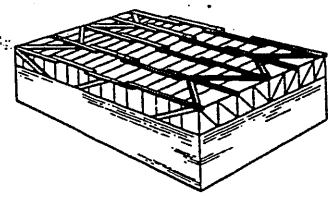

Bracing requirements using the same principles apply to parallel chord trusses

8 Stacking Materials

Do not proceed with building completion until all bracing is securely and properly in place

Never stack materials on unbraced or inadequately braced trusses

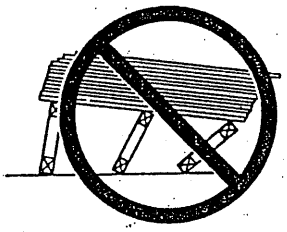

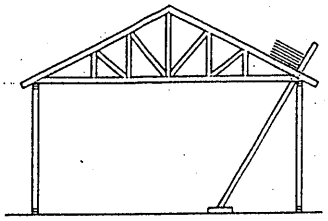

Proper distribution of construction materials is a must during construction.

Never stack materials near a peak

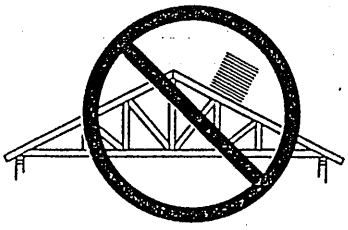

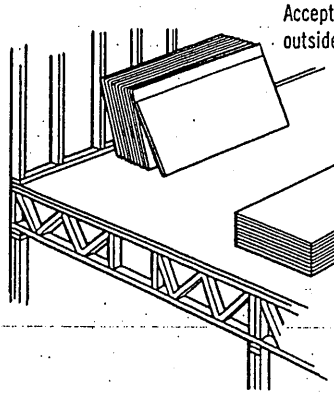

Never stack materials on the cantilever of a truss

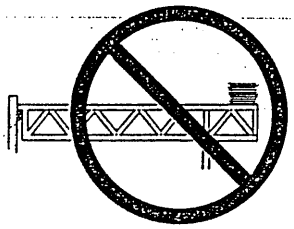

Always stack materials over two or more trusses.

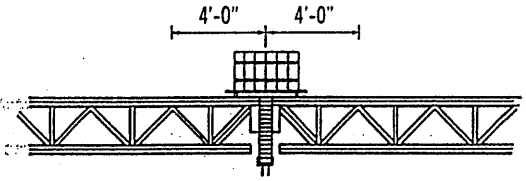

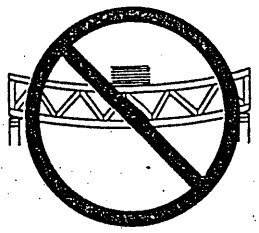

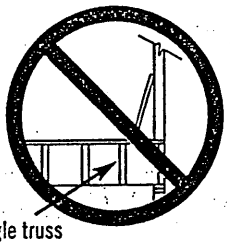

Roofing and mechanical contractors are cautioned to stack materials only along outside supporting members or directly over inside supporting members. Trusses are not designed for dynamic loads (i.e., moving vehicles). Extreme care should be taken when loading and stacking construction materials (rolled roofing, mechanical equipment, etc.) on the roof or floor system.

Never overload small groups or single trusses. Position load over as many trusses as possible.

Never cut any structural member of a truss.

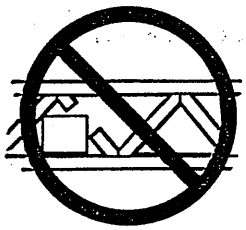

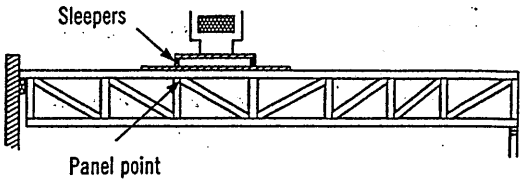

Sleepers for mechanical equipment should be located at panel points (joints) or over main supporting members, and only on trusses that have been designed for such loads.

Caution Notes

Errors in building lines and/or dimensions, or errors by others shall be corrected by the contractor or responsible construction trade subcontractor or supplier **before** erection of trusses begins.

Cutting of nonstructural overhangs is considered a part of normal erection and shall be done by the builder or erection contractor.

Any field modification that involves the cutting, drilling, or relocation of any structural truss member or connector plate shall not be done without the approval of the truss manufacturer or a licensed design professional.

The methods and procedures outlined are intended to ensure that the overall construction techniques employed will put floor and roof trusses **safely** in place in a completed structure. These recommendations for bracing wood trusses originate from the collective experience of leading technical personnel in the wood truss industry, but must, due to the nature of responsibilities involved, be presented only as a **guide** for use by a qualified building designer, builder, or erection contractor. Thus, the Wood Truss Council of America expressly disclaims any responsibility for damages arising from the use, application, or reliance on the recommendations and information contained herein.

[Selected text and figures referenced or reproduced from HIB and DSB by permission of the Truss Plate Institute, Madison, WI.]

THE CANADIAN WOOD TRUSS ASSOCIATION

L'ASSOCIATION CANADIENNE DES FABRICANTS DE FERMES DE BOIS

1400 Blair Place, Suite 210, Ottawa, ON K1J 9B8
Tel.: 613-747-5544 Fax: 613-747-6264

Wood Truss Council of America

One WTCA Center
6300 Enterprise Lane, Madison, WI 53719-1140
Tel.: 608-274-4849 Fax: 608-274-3329
wtca@woodtruss.com www.woodtruss.com