GOLDPARK
WORTH MORE™

CONSTRUCTION SUMMARY

Lot: 83
Model: 50.04 A BEAUMONT
Project/Phase: Pine Valley Forevergreen / 1

BASEMENT WINDOWS

Invoice	Qty.	Description
2564 72,675 10Mar21	2	BASEMENT WINDOWS - UPGRADE BASEMENT WINDOW SIZE TO 30 " X 24" - 10" FRAME (PINEVALLEY 50 FOOT LOTS ONLY)

CERAMIC

Invoice	Qty.	Description
2564 10Mar21 NoCat	1	MASTER ENSUITE: DELETE LINEN CLOSET, INSTALL ADDITIONAL SINGLE VANITY AND SINK INSTEAD - BASED ON STANDARD FINISHES SEE PLAN FOR DETAILS INCLUDED IN APS
2564 10Mar21 NoCat	1	**CUSTOM LAYOUT** SWITCH LOCATION OF TUB AND SHOWER ENSUITE 2 TO HAVE TUB + ENSUITE 3 TO HAVE SHOWER BASED ON STANDARD FINSIHES
2564 10Mar21 NoCat	1	MASTER ENSUITE: DELETE LINEN PANTRY - ADD 2ND VANITY (BASED ON STANDARD FINISHES) - SEE PLAN FOR LOCATION

CONCRETE AND DRAIN

Invoice	Qty.	Description
2564 10Mar21 NoCat	1	BACK-FLOW PREVENTER VALVE

GOLDPARK
WORTH MORE™

CONSTRUCTION SUMMARY

Lot: 83
Model: 50.04 A BEAUMONT
Project/Phase: Pine Valley Forevergreen / 1

DRYWALL

Invoice	Qty.	Description
2564 10Mar21 NoCat	1	**CUSTOM LAYOUT** DELETE ARCH WAYS BETWEEN LIBRARY AND DINING ROOM
2564 10Mar21 NoCat	1	FYI - KITCHEN: UPGRADE GARDEN DOOR ASSEMBLY TO 96"
2564 10Mar21 NoCat	1	MASTER ENSUITE: DELETE LINEN CLOSET, MAKE DRESSING ROOM AND BEDROOM 4 CLOSETS LARGER
2564 10Mar21 NoCat	1	MASTER ENSUITE: DELETE LINEN CLOSET, INSTALL ADDITIONAL SINGLE VANITY AND SINK INSTEAD - BASED ON STANDARD FINISHES SEE PLANS FOR DETAILS INCLUDED IN APS
2564 10Mar21 NoCat	1	**CUSTOM LAYOUT** SWITCH LOCATION OF TUB AND SHOWER ENSUITE 2 TO HAVE TUB + ENSUITE 3 TO HAVE SHOWER BASED ON STANDARD FINISHES
2564 10Mar21 NoCat	1	THRU OUT: INCREASE HEIGHT OF DOOR TO 8FT SECOND FLOOR - PER DOOR
2564 10Mar21 NoCat	1	MASTER ENSUITE: DELETE LINEN PANTRY - ADD 2ND VANITY (BASED ON STANDARD FINISHES) - SEE PLAN FOR LOCATION

GOLDPARK
WORTH MORE™

CONSTRUCTION SUMMARY

Lot: 83
Model: 50.04 A BEAUMONT
Project/Phase: Pine Valley Forevergreen / 1

ELECTRICAL

Invoice	Qty.	Description
2564 72,281 10Mar21	1	GREAT ROOM: INTERIOR WALL OUTLET: ADDITIONAL 110V WALL INTERIOR RECEPTACLE ON EXISTING CIRCUIT FOR WALL MOUNTED TV - LOCATE APPROX 66" A.F.F. ABOVE FIREPLACE
2564 72,272 10Mar21	1	KITCHEN: 110V WALL RECEPTACLE ON SEPARATE CIRCUIT - FOR WINE FRIDGE - APPLIANCE NOT INCLUDED SEE PLAN FOR LOCATION
2564 72,306 10Mar21	1	KITCHEN: RELOCATE KITCHEN APPLIANCE FROM STANDARD LOCATION - APPROX. "NEW" LOCATION AS PER ATTACHED DRAWINGS SEE PLAN FOR REVISED FRIDGE LOCATION
2564 72,272 10Mar21	1	KITCHEN: 110V WALL RECEPTACLE ON SEPARATE CIRCUIT - FOR FREEZER - APPLIANCE NOT INCLUDED
2564 72,272 10Mar21	1	SERVERY: 110V WALL RECEPTACLE ON SEPARATE CIRCUIT - FOR MICROWAVE - MICROWAVE NOT INCLUDED
2564 72,289 10Mar21	6	GREAT ROOM: 4" E/S LED INTERIOR POT LIGHT - GROUND FLOOR - EACH - INCLUDED IN APS INCLUDES SWITCH
2564 10Mar21 NoCat	1	MASTER ENSUITE: DELETE LINEN CLOSET, MAKE DRESSING ROOM AND BEDROOM 4 CLOSETS LARGER

EXTERIOR COLOURS

Invoice	Qty.	Description
2564 10Mar21 NoCat	1	EXTERIOR COLOUR PACKAGE: BR1

GOLDPARK
WORTH MORE™

CONSTRUCTION SUMMARY

Lot: 83
Model: 50.04 A BEAUMONT
Project/Phase: Pine Valley Forevergreen / 1

FRAMING

Invoice	Qty.	Description
2564 10Mar21 NoCat	1	**CUSTOM LAYOUT** DELETE ARCH WAYS BETWEEN LIBRARY AND DINING ROOM
2564 10Mar21 NoCat	1	FYI - KITCHEN: UPGRADE GARDEN DOOR ASSEMBLY TO 96"
2564 10Mar21 NoCat	1	MASTER ENSUITE: DELETE LINEN CLOSET, MAKE DRESSING ROOM AND BEDROOM 4 CLOSETS LARGER
2564 10Mar21 NoCat	1	MASTER ENSUITE: DELETE LINEN CLOSET, INSTALL ADDITIONAL SINGLE VANITY AND SINK INSTEAD - BASED ON STANDARD FINISHES SEE PLAN FOR DETAILS INCLUDED IN APS
2564 10Mar21 NoCat	1	**CUSTOM LAYOUT** SWITCH LOCATION OF TUB AND SHOWER ENSUITE 2 TO HAVE TUB + ENSUITE 3 TO HAVE SHOWER BASED ON STANDARD FINISHES
2564 10Mar21 NoCat	1	THRU OUT: INCREASE HEIGHT OF DOOR TO 8FT SECOND FLOOR - PER DOOR
2564 10Mar21 NoCat	1	MASTER ENSUITE: DELETE LINEN PANTRY - ADD 2ND VANITY (BASED ON STANDARD FINISHES) - SEE PLAN FOR LOCATION

GLASS AND MIRROR

Invoice	Qty.	Description
2564 10Mar21 NoCat	1	MASTER ENSUITE: DELETE LINEN CLOSET, INSTALL ADDITIONAL SINGLE VANITY AND SINK INSTEAD - BASED ON STANDARD FINISHES SEE PLAN FOR DETAILS INCLUDED IN APS
2564 10Mar21 NoCat	1	**CUSTOM LAYOUT** SWITCH LOCATION OF TUB AND SHOWER ENSUITE 2 TO HAVE TUB + ENSUITE 3 TO HAVE SHOWER BASED ON STANDARD FINISHES
2564 10Mar21 NoCat	1	MASTER ENSUITE: DELETE LINEN PANTRY - ADD 2ND VANITY (BASED ON STANDARD FINISHES) - SEE PLAN FOR LOCATION

GOLDPARK
WORTH MORE™

CONSTRUCTION SUMMARY

Lot: 83
Model: 50.04 A BEAUMONT
Project/Phase: Pine Valley Forevergreen / 1

INTERIOR TRIM AND DOORS

Invoice	Qty.	Description
2564 72,644 10Mar21	15	THRU OUT: INCREASE HEIGHT OF DOOR TO 8FT SECOND FLOOR - PER DOOR
2564 10Mar21 NoCat	1	MASTER ENSUITE: DELETE LINEN CLOSET, MAKE DRESSING ROOM AND BEDROOM 4 CLOSETS LARGER
2564 10Mar21 NoCat	1	MASTER ENSUITE: DELETE LINEN PANTRY - ADD 2ND VANITY (BASED ON STANDARD FINISHES) - SEE PLAN FOR LOCATION

KITCHEN AND BATH CABINETRY

Invoice	Qty.	Description
2564 10Mar21 NoCat	1	MASTER ENSUITE: DELETE LINEN CLOSET, INSTALL ADDITIONAL SINGLE VANITY AND SINK INSTEAD - BASED ON STANDARD FINISHES SEE PLAN FOR DETAILS INCLUDED IN APS
2564 10Mar21 NoCat	1	KITCHEN: RELOCATE KITCHEN APPLIANCE FROM STANDARD LOCATION - APPROX. "NEW" LOCATION AS PER ATTACHED DRAWINGS SEE PLAN FOR RELOCATION OF FRIDGE
2564 10Mar21 NoCat	1	MASTER ENSUITE: DELETE LINEN PANTRY - ADD 2ND VANITY (BASED ON STANDARD FINISHES) - SEE PLAN FOR LOCATION

MASONRY

Invoice	Qty.	Description
2564 10Mar21 NoCat	1	FYI - KITCHEN: UPGRADE GARDEN DOOR ASSEMBLY TO 96"

NETWORK AND WIRING

Invoice	Qty.	Description
2564 72,259 10Mar21	1	GREAT ROOM: CONDUIT PIPE - FOR WALL MOUNT TV - LOCATE APPROX 66" A.F.F. ABOVE FIREPLACE, THRU BASEMENT, TERMINATE AT CABLE LOCATION - SEE PLAN
2564 72,260 10Mar21	1	CONDUIT PIPE - FROM ATTIC TO BASEMENT - ELECTRICAL PANEL IN BASEMENT TO APPROX CENTER OF ATTIC

GOLDPARK
WORTH MORE™

CONSTRUCTION SUMMARY

Lot: 83
Model: 50.04 A BEAUMONT
Project/Phase: Pine Valley Forevergreen / 1

PAINT

Invoice	Qty.	Description
2564 10Mar21 NoCat	1	**CUSTOM LAYOUT** DELETE ARCH WAYS BETWEEN LIBRARY AND DINING ROOM
2564 10Mar21 NoCat	1	FYI - KITCHEN: UPGRADE GARDEN DOOR ASSEMBLY TO 96"
2564 10Mar21 NoCat	1	MASTER ENSUITE: DELETE LINEN CLOSET, MAKE DRESSING ROOM AND BEDROOM 4 CLOSETS LARGER
2564 10Mar21 NoCat	1	MASTER ENSUITE: DELETE LINEN CLOSET, INSTALL ADDITIONAL SINGLE VANITY AND SINK INSTEAD - BASED ON STANDARD FINISHES SEE PLAN FOR DETAILS INCLUDED IN APS
2564 10Mar21 NoCat	1	**CUSTOM LAYOUT** SWITCH LOCATION OF TUB AND SHOWER ENSUITE 2 TO HAVE TUB + ENSUITE 3 TO HAVE SHOWER BASED ON STANDARD FINISHES
2564 10Mar21 NoCat	1	THRU OUT: INCREASE HEIGHT OF DOOR TO 8FT SECOND FLOOR - PER DOOR
2564 10Mar21 NoCat	1	MASTER ENSUITE: DELETE LINEN PANTRY - ADD 2ND VANITY (BASED ON STANDARD FINISHES) - SEE PLAN FOR LOCATION

PLUMBING

Invoice	Qty.	Description
2564 72,332 10Mar21	1	KITCHEN: ROUGH-IN 1/4" COLD WATER LINE TO FREEZER
2564 10Mar21 NoCat	1	MASTER ENSUITE: DELETE LINEN CLOSET, INSTALL ADDITIONAL SINGLE VANITY AND SINK INSTEAD - BASED ON STANDARD FINISHES SEE PLAN FOR LOCATION INCLUDED IN APS
2564 10Mar21 NoCat	1	**CUSTOM LAYOUT** SWITCH LOCATION OF TUB AND SHOWER ENSUITE 2 TO HAVE TUB + ENSUITE 3 TO HAVE SHOWER BASED ON STANDARD FINISHES
2564 10Mar21 NoCat	1	MASTER ENSUITE: DELETE LINEN PANTRY - ADD 2ND VANITY (BASED ON STANDARD FINISHES) - SEE PLAN FOR LOCATION INCLUDED IN APS
2564 10Mar21 NoCat	1	MASTER ENSUITE: DELETE LINEN CLOSET, MAKE DRESSING ROOM AND BEDROOM 4 CLOSETS LARGER

GOLDPARK
WORTH MORE™

CONSTRUCTION SUMMARY

Lot: 83
Model: 50.04 A BEAUMONT
Project/Phase: Pine Valley Forevergreen / 1

WINDOWS AND DOORS

Invoice	Qty.	Description
2564 10Mar21 NoCat	1	KITCHEN: UPGRADE GARDEN DOOR ASSEMBLY TO 96"
2564 10Mar21 NoCat	1	THRU OUT: UPGRADE TO BLACK INTERIOR WINDOWS

SCHEDULE 'F'

PV-83
Feb.12, 2021

PINE VALLEY
FOREVERGREEN

The Beaumont

50' SERIES

Elevation A • 4,170 sq.ft.
4,315 sq.ft. Opt. Elevator
Elevation B • 4,165 sq.ft.
4,315 sq.ft. Opt. Elevator
Elevation C • 4,250 sq.ft.
4,400 sq.ft. Opt. Elevator

BLACK INTERIOR WINDOWS

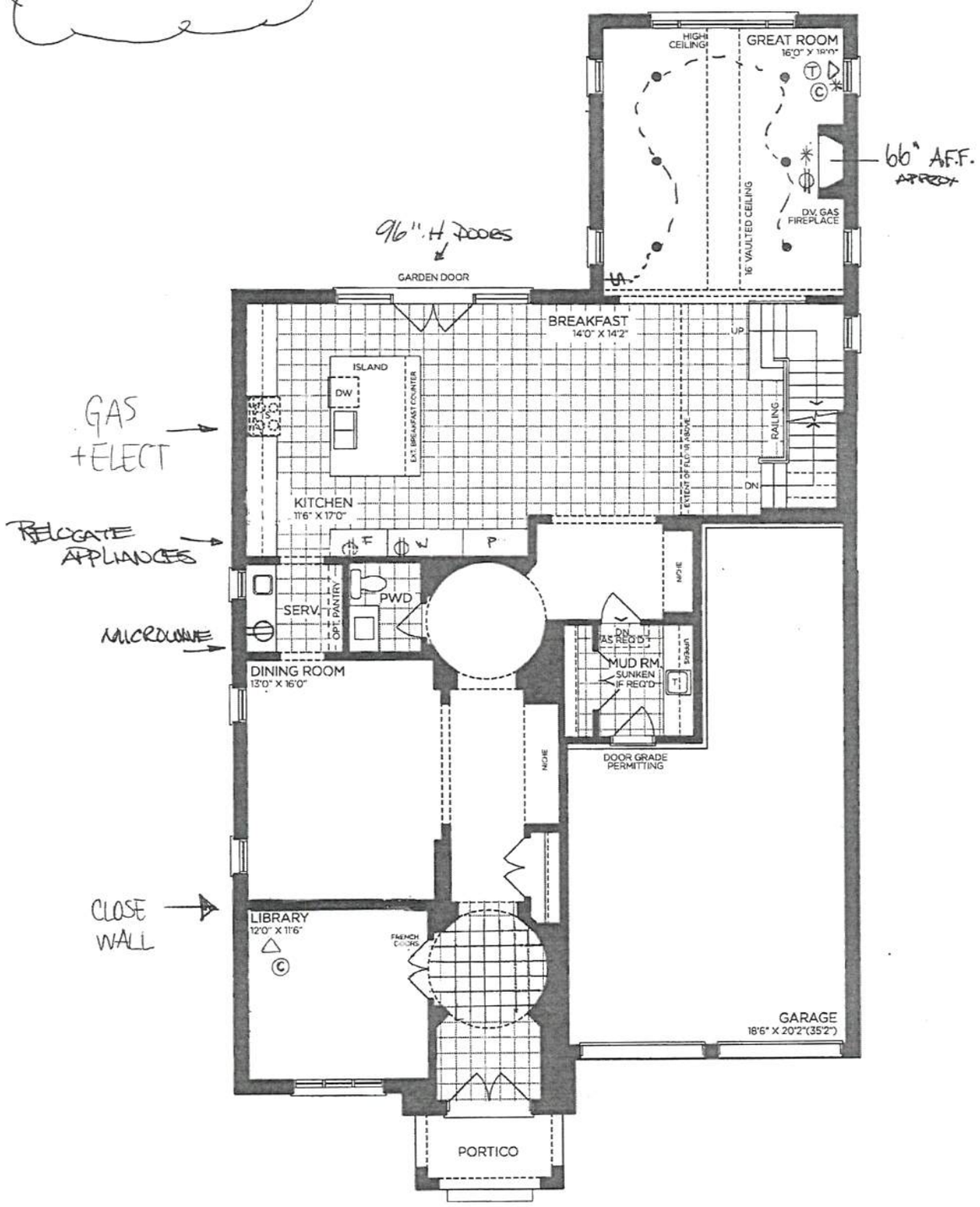

GROUND FLOOR | ELEV. A

VENDOR
PURCHASER
PURCHASER

GOLDPARK
WORTH MORE™

Prices, figures, illustrations, sizes, features and finishes are subject to change without notice. Areas and dimensions are approximate and actual usable floor space may vary from the stated area. Layout may be reverse of the unit purchased. E. & O.E. 5004

SCHEDULE 'F'

PV-83 (attached)
Feb. 12, 2021

PINE VALLEY
FOREVER GREEN

The Beaumont

50' SERIES

Elevation A • 4,170 sq.ft.
4,315 sq.ft. Opt. Elevator
Elevation B • 4,165 sq.ft.
4,315 sq.ft. Opt. Elevator
Elevation C • 4,250 sq.ft.
4,400 sq.ft. Opt. Elevator

8ft DOORS THRU OUT 2nd FLOOR

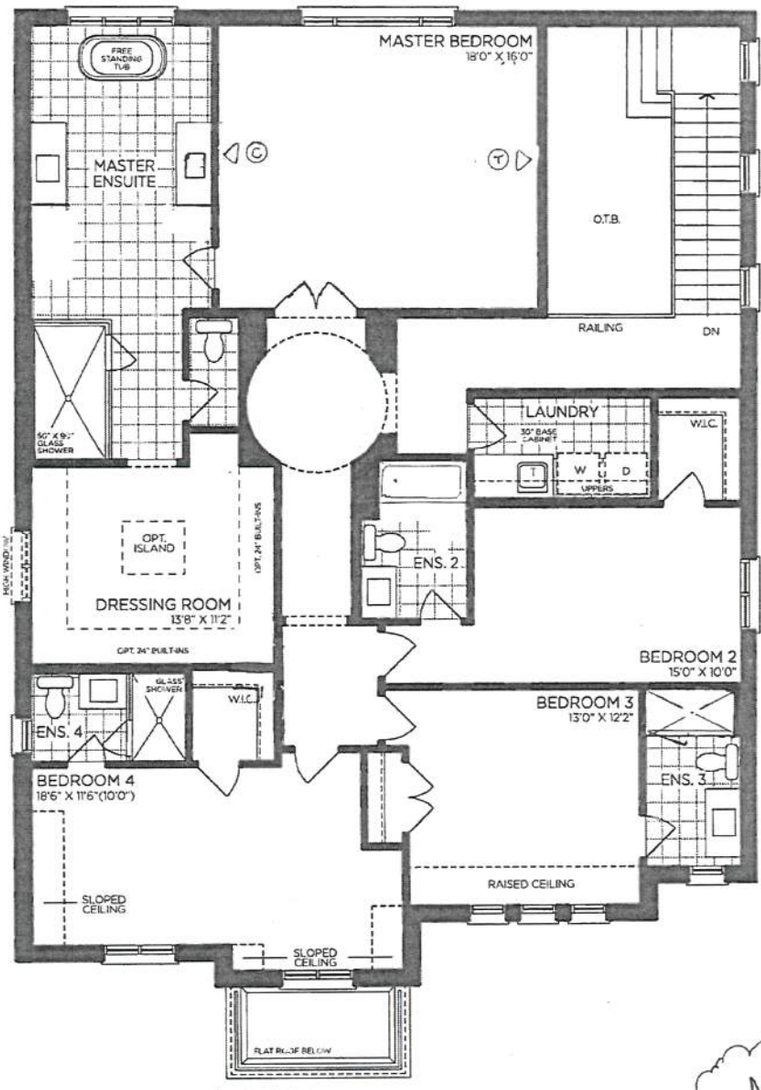

← TUB at ENSUITE 2.

SHOWER ← at ENS 3

SECOND FLOOR | ELEV. A

No phones in Bedroom 2/3/4

VENDOR _____
PURCHASER _____
PURCHASER _____

GOLDPARK
WORTH MORE™

Prices, figures, illustrations, sizes, features and finishes are subject to change without notice. Areas and dimensions are approximate and actual usable floor space may vary from the stated area. Layout may be reverse of the unit purchased. E. & O.E. 5004

SCHEDULE 'F'
PV-83 attached
Feb. 12, 2021

PINE VALLEY
FOREVERGREEN

The Beaumont

50' SERIES

Elevation A • 4,170 sq.ft.
4,315 sq.ft. Opt. Elevator
Elevation B • 4,165 sq.ft.
4,315 sq.ft. Opt. Elevator
Elevation C • 4,250 sq.ft.
4,400 sq.ft. Opt. Elevator

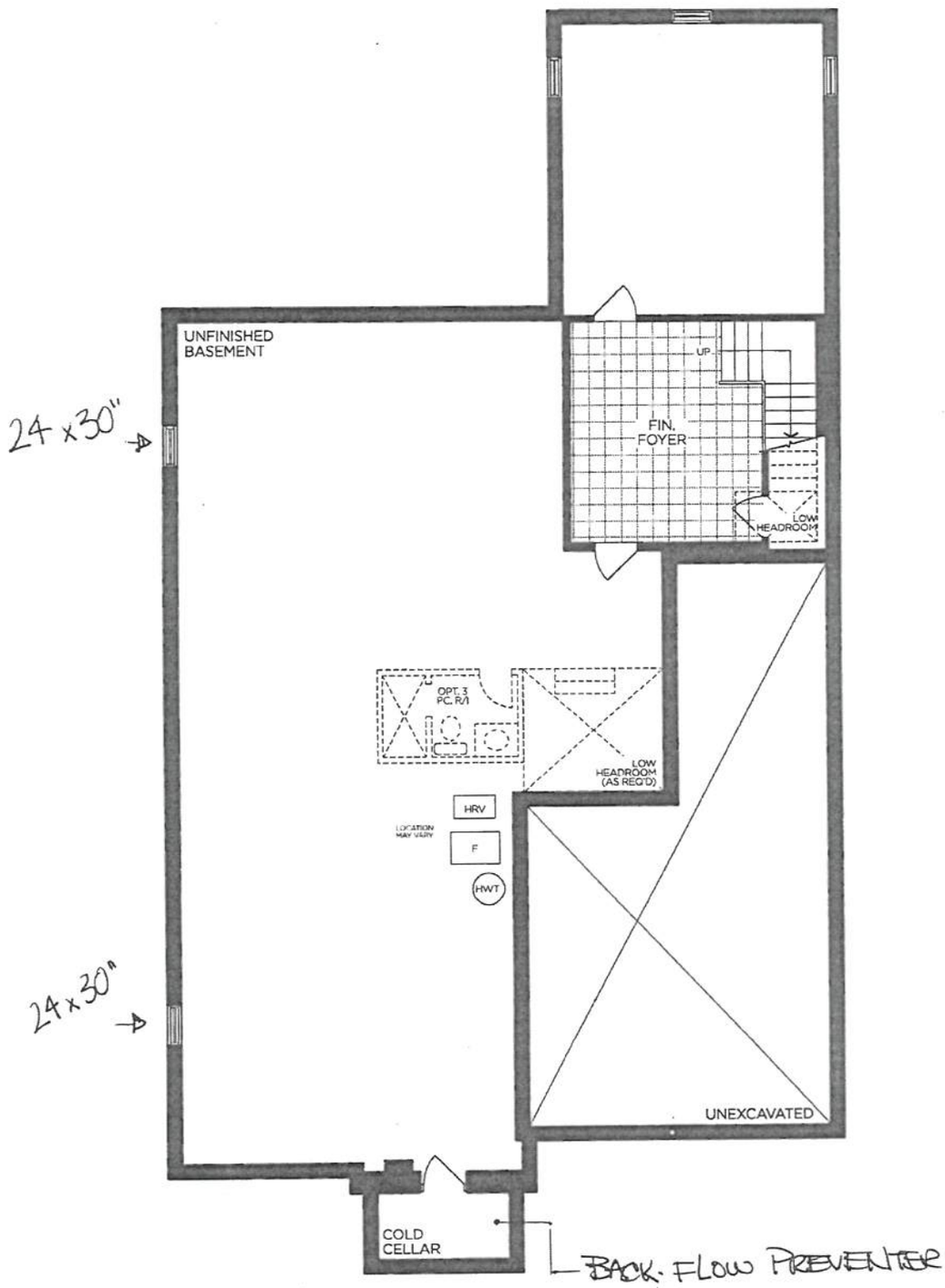

BASEMENT | ELEV. A

VENDOR _____
PURCHASER _____
PURCHASER _____

GOLDPARK
WORTH MORE™

Prices, figures, illustrations, sizes, features and finishes are subject to change without notice. Areas and dimensions are approximate and actual usable floor space may vary from the stated area. Layout may be reverse of the unit purchased. E. & O.E. 5004

SCHEDULE 'F'

PV-83
Feb.12, 2021

PINE VALLEY

The Beaumont

50' SERIES

Elevation A • 4,170 sq.ft.
4,315 sq.ft. Opt. Elevator
Elevation B • 4,165 sq.ft.
4,315 sq.ft. Opt. Elevator
Elevation C • 4,250 sq.ft.
4,400 sq.ft. Opt. Elevator

BLACK INTERIOR WINDOWS

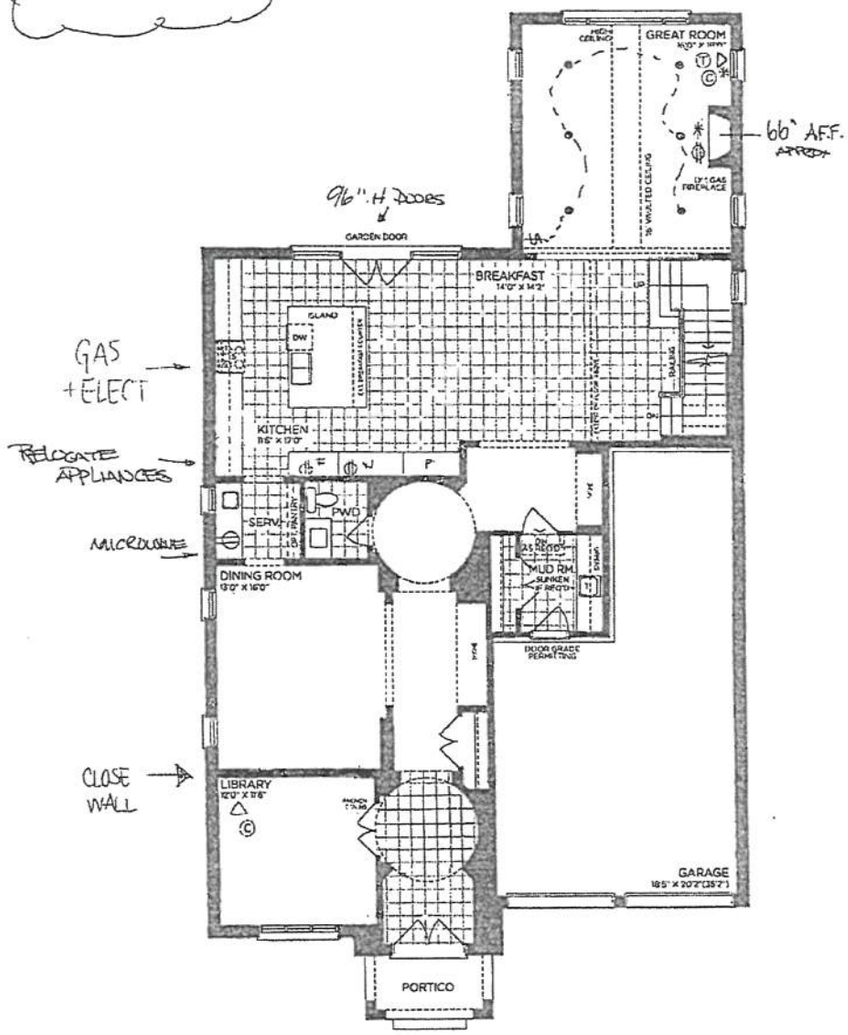

GROUND FLOOR | ELEV. A

VENDOR
PURCHASER
PURCHASER

GOLDPARK
WORTH MORE

Prices, figures, illustrations, sizes, features and finishes are subject to change without notice. Areas and dimensions are approximate and actual usable floor space may vary from the stated area. Layout may be reverse of the unit purchased. E. & O.E. 5004

SCHEDULE 'F'

PV-83 [illegible] [illegible]

Feb. 12, 2021

PINE VALLEY

The Beaumont

50' SERIES

Elevation A • 4,170 sq.ft.
4,315 sq.ft. Opt. Elevator

Elevation B • 4,165 sq.ft.
4,315 sq.ft. Opt. Elevator

Elevation C • 4,250 sq.ft.
4,400 sq.ft. Opt. Elevator

8ft DOORS THRU OUT 2nd FLOOR

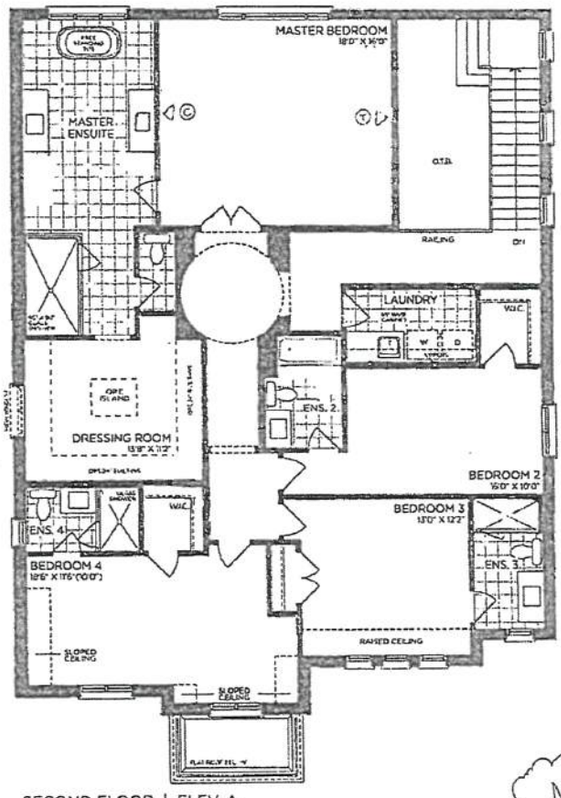

SECOND FLOOR | ELEV. A

← TUB at ENSUITE 2.

DELETE LINEN CLOSET →

SHOWER → ENS 3

No phones in Bedroom 2/3/4

VENDOR _____

PURCHASER _____

PURCHASER _____

GOLDPARK
WORTH MORE

Prices, figures, illustrations, sizes, features and finishes are subject to change without notice. Areas and dimensions are approximate and actual usable floor space may vary from the stated area. Layout may be reverse of the unit purchased. E. & O.E. 5004

SCHEDULE 'F'
PV-83
Feb.12, 2021

PINE VALLEY

The Beaumont

50' SERIES

Elevation A • 4,170 sq.ft.
4,315 sq.ft. Opt. Elevator
Elevation B • 4,165 sq.ft.
4,315 sq.ft. Opt. Elevator
Elevation C • 4,250 sq.ft.
4,400 sq.ft. Opt. Elevator

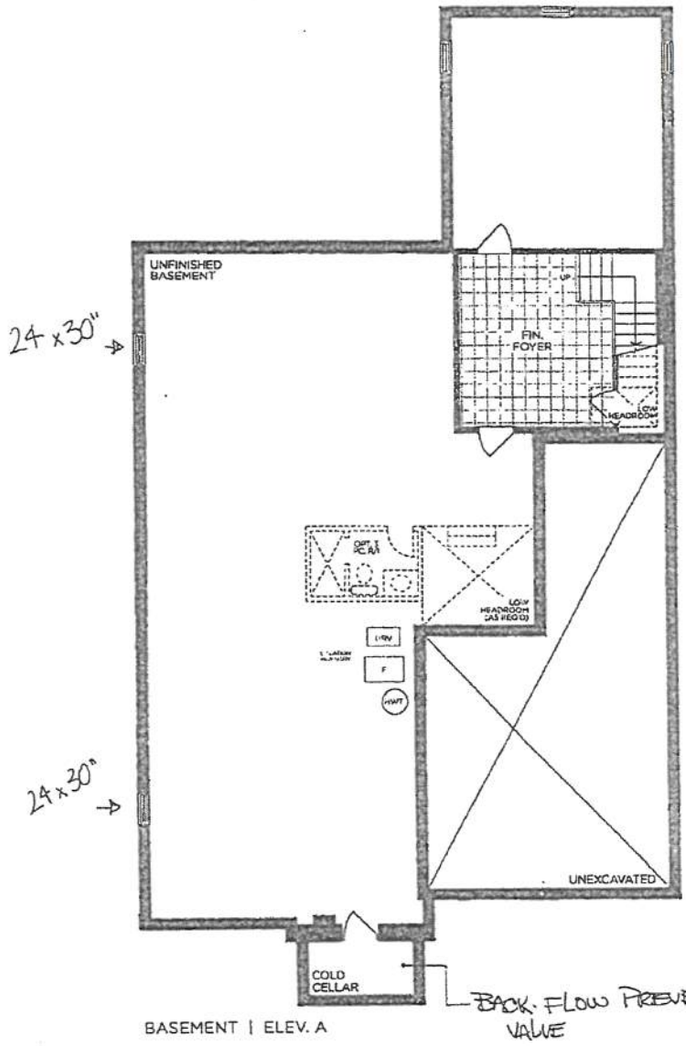

BASEMENT | ELEV. A

VENDOR
PURCHASER
PURCHASER

GOLDPARK
WORTH MORE

Prices, figures, illustrations, sizes, features and finishes are subject to change without notice. Areas and dimensions are approximate and actual usable floor space may vary from the stated area. Layout may be reverse of the unit purchased. E. & O.E. 5004

PV-83 attached
Feb 12, 2021

Fresh Living Tip

If you love wine and good food with equal enthusiasm, consider this model. It offers the most versatility between wine storage and flat shelving for food and beverages than any other model in the Marvel lineup. Plus each shelf glides out to access contents easily.

FINISH OPTIONS

24" Marvel Professional Beverage Center

MPBV424

Performance

- 5.5 cu. ft. capacity stores 19 wine bottles total (14 flat, 5 cradled) and holds (108) 12-oz cans
- (2) 3-in-1 Slide-Out Split Convertible Shelves feature removable glass pane with wine rack option to store beverages, food or wine
- Display wine rack glides out for easy access and holds 5 wine bottles, including magnum sizes
- Access contents easily with full-extension shelf, glideout shelving on the smooth-glide ball bearing system
- Cantilevered shelving system adjusts height to your storage needs

Cooling Performance

- Dynamic cooling technology delivers rapid cool down, frost-free operation and precise temperature stability
- Thermal-efficient cabinet ensures optimum food preservation and energy efficiency while maximizing capacity
- Argon-filled, UV-resistant tinted dual pane glass door protects contents from damaging ultraviolet light and helps conserve energy

Convenient Controls

- Multifunction controls allow you to select a precise cabinet temperature from 33°F to 70° F
- Audible alarms for door ajar and high/low temperature ensure your contents stay at optimal temperature
- At the touch of a button, change the interior light color to sapphire blue or arctic white
- Theater-style display lighting gently brightens as door is opened and dims to off when closed

Fit & Finish

- Elegant midnight black interior
- Professional styling: robust full-length handle and stainless steel accents
- Reversible soft-close door allows for right or left swing
- Door lock provides added security

Warranty

- 3-year parts and labor warranty with product registration and 5-year sealed system parts warranty

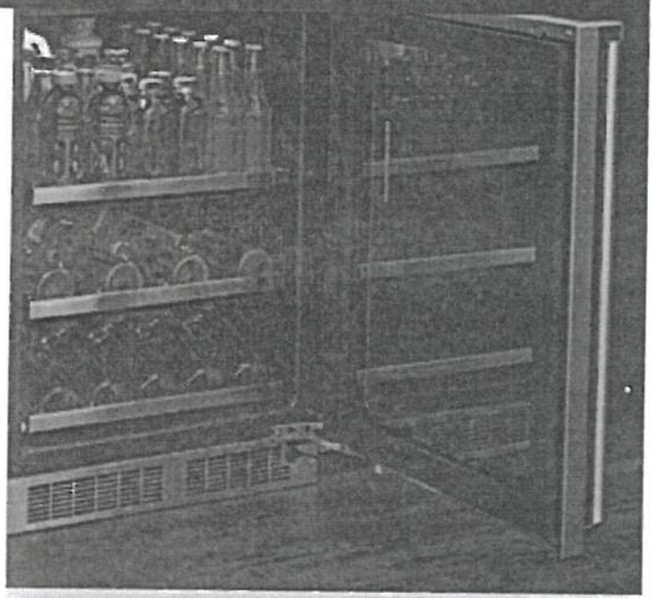

A dynamic food, beverage and wine storage solution, this adaptable beverage center features two versatile glass shelves that convert to a wine rack option. An additional display wine rack can hold a variety of bottle types, including magnum sizes.

3-in-1 Convertible Shelf

DOOR STYLE	MODEL NUMBER
Stainless Steel Frame Glass	MPBV424-SG31A
Panel Ready Frame Glass	MPBV424-IG31A
Solid Panel Ready	MPBV424-IS31A
Solid Stainless Steel	MPBV424-SS31A

PV-83 attached
Feb 12, 2021

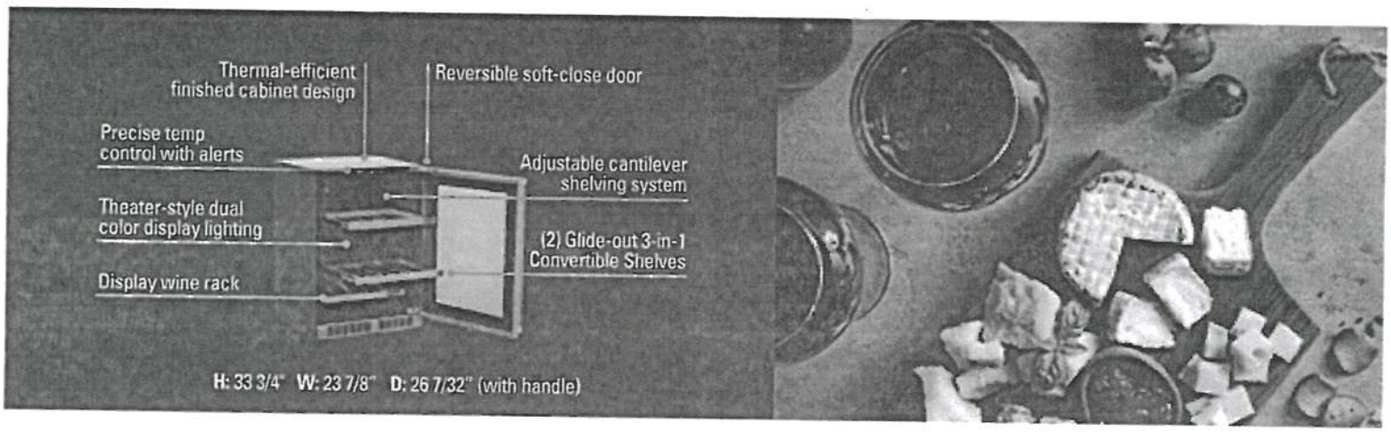

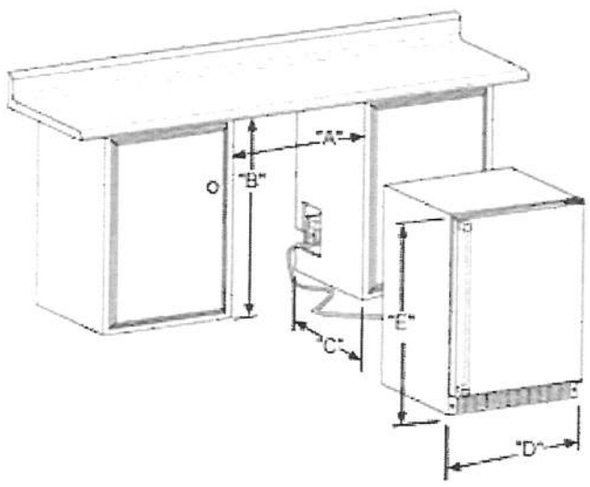

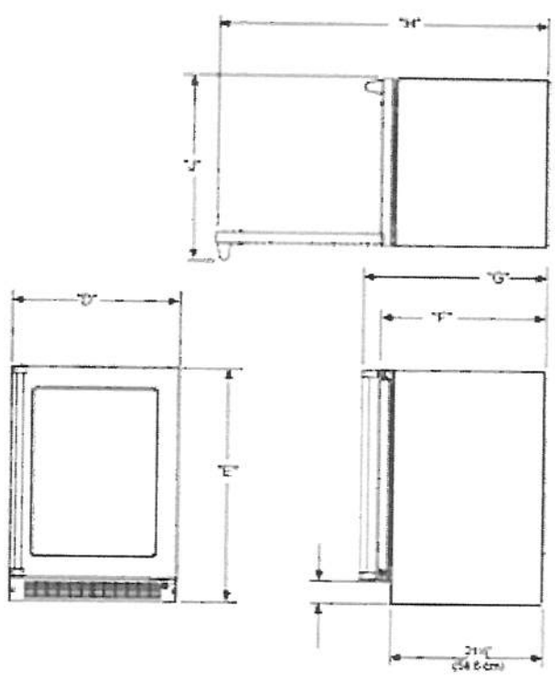

Rough In Dimensions*			Cabinet Dimensions*					
"A"	"B"	"C"	"D"	"E"	"F"	"G"	"H"	"J"
24" (61 CM)	34-1/4" to 35-1/4" (87 CM to 89.5 CM)	24" (61 CM)	23-7/8" (60.7 CM)	33-5/8" TO 34-5/8" (85.4 CM TO 87.9 CM)	23-5/8"* (60 CM)	26-1/8"* (66.3 CM)	47-3/4"* (146.6 CM)	26-1/2"* (67.3 CM)

*Stainless steel model dimensions only. For panel-ready models, see the owner's guide online at marvelrefrigeration.com.

Capacity	5.5 CU. FT.
Control Type	Electronic
Sabbath Mode	Yes
Temperature Range	33°F to 70°F
Handle Style	Professional (handle not included on panel-ready models)
Hinge Type	Reversible Soft-Close
Interior Lighting	White + Blue LED
Shelving System	Cantilever
Toe Grille Finish	Stainless Steel (Black on Panel-Ready Models)

Lock	Yes
Electrical Requirements	115V / 60 Hz / 15A
Cord Length	6 FT.
Shipping Dimensions	28" W x 31" D x 37" H
Shipping Weight	160 LBS
Agency Approval	UL
Refrigerant Type	R600a

For comprehensive installation instructions, including panel overlay details, please visit marvelrefrigeration.com to access the owner's guide.

PV - 83 (attached)
Feb 12, 2021

PRD486WIGC

48-INCH DUAL-FUEL PRO GRAND® INDUCTION RANGE

PROFESSIONAL SERIES, COMMERCIAL-DEPTH, PORCELAIN COOKTOP SURFACE

Thermador

Home Connect

FEATURES & BENEFITS

- ★ - 4 ExtraLow® burners for simmering, melting, or holding long durations
- ★ - ExtraHigh Star® Burner—22,000 BTUs of power for searing or boiling
- ★ - Hydraulic SoftClose® hinges prevent slamming for ultra smooth closing
- 3,600W induction: rapid boiling and full surface heating for griddles
- Superfast 2.5-hour self-clean mode-fastest in the industry

TECHNICAL DETAILS	
Circuit Breaker	50 A
Volts	240 / 208 V, 60Hz 4 Wire
Energy Source	Gas and Electric
Plug Type	208 / 240V 4 Prong
Power Cord Length	Purchase Separately
Gas Supply	3/4"

WARRANTY	
Limited Warranty, Entire Appliance, Parts and Labor	2 Year

SEE PAGE 2 FOR INCLUDED AND OPTIONAL ACCESSORIES

RANGETOP

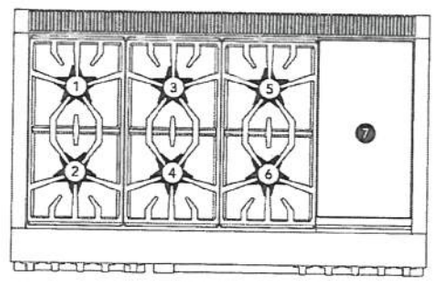

Total Number of Cooktop Burners	6 + Induction
1 – Power of Back Left Burner BTU	15,000 and XLO
2 – Power of Front Left Burner BTU	22,000 and XHI / XLO
3 – Power of Back Center Burner BTU	15,000
4 – Power of Front Center Burner BTU	18,000
5 – Power of Right Back Center Burner BTU	15,000 and XLO
6 – Power of Right Front Center Burner BTU	18,000 and XLO
7 – Power of Far Right 12" Induction	3,600 W

OVEN	
Oven Capacity (Lg / Sm)	5.7 / 2.5 cu. ft.
Cooking Modes – Large Cavity	
Bake, Convection Bake, True Convection, Convection Roast, Roast, Convection Broil, Broil	
Cooking Modes – Small Cavity	
Bake, Convection Bake, Proof, Keep Warm, Convection Roast, Roast, Convection Broil, Broil	
Sabbath (Lg / Sm)	Yes / Yes
Self-Clean (Lg / Sm)	Yes / Yes
Telescopic Rack(s) (Lg / Sm)	3 / 2
Interior Lights (Lg / Sm)	2 / 1
Bake Power (Lg / Sm)	2,000 W / 1,400 W
Broil Power (Lg / Sm)	4,000 W / 2,600 W
Convection Power (Lg / Sm)	2,750 W / 1,960 W
Home Connect™ (Wi-Fi Enabled)	Yes, Large Oven Only
Lg Cavity Interior Dimensions (HxWxD)	16 1/4" x 28" x 21 1/2"
Lg Cavity Usable Dimensions (HxWxD)	12" x 25 3/8" x 19 1/2"
Sm Cavity Interior Dimensions (HxWxD)	16 1/4" x 12 3/8" x 21 1/2"
Sm Cavity Usable Dimensions (HxWxD)	12" x 9 3/4" x 19 1/2"

DIMENSIONS & WEIGHT	
Overall Appliance Dimensions (HxWxD)	35 3/4" – 36 3/4" x 47 15/16" x 27 7/8"
Required Cutout Size (HxWxD)	35 3/4" – 36 3/4" x 48" x 24" – 25 1/8"
Net Weight	530 lbs.

★ THERMADOR® EXCLUSIVE

PV-83 Attached
Feb. 12, 2021

PRD486WIGC

48-INCH DUAL-FUEL PRO GRAND® INDUCTION RANGE

PROFESSIONAL SERIES, COMMERCIAL-DEPTH, PORCELAIN COOKTOP SURFACE

Thermador

48-INCH RANGE DIMENSIONS

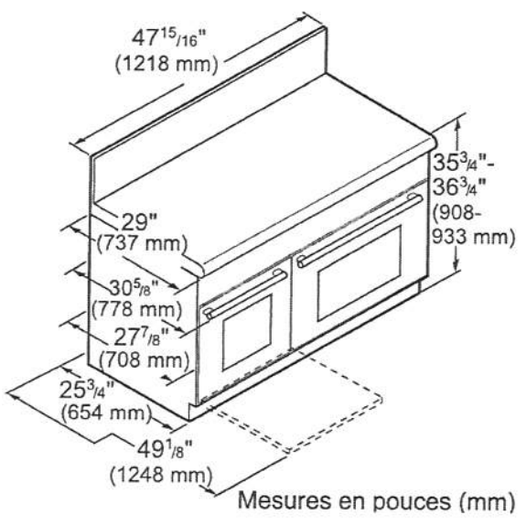

Mesures en pouces (mm)

48-INCH RANGE CUTOUT DIMENSIONS

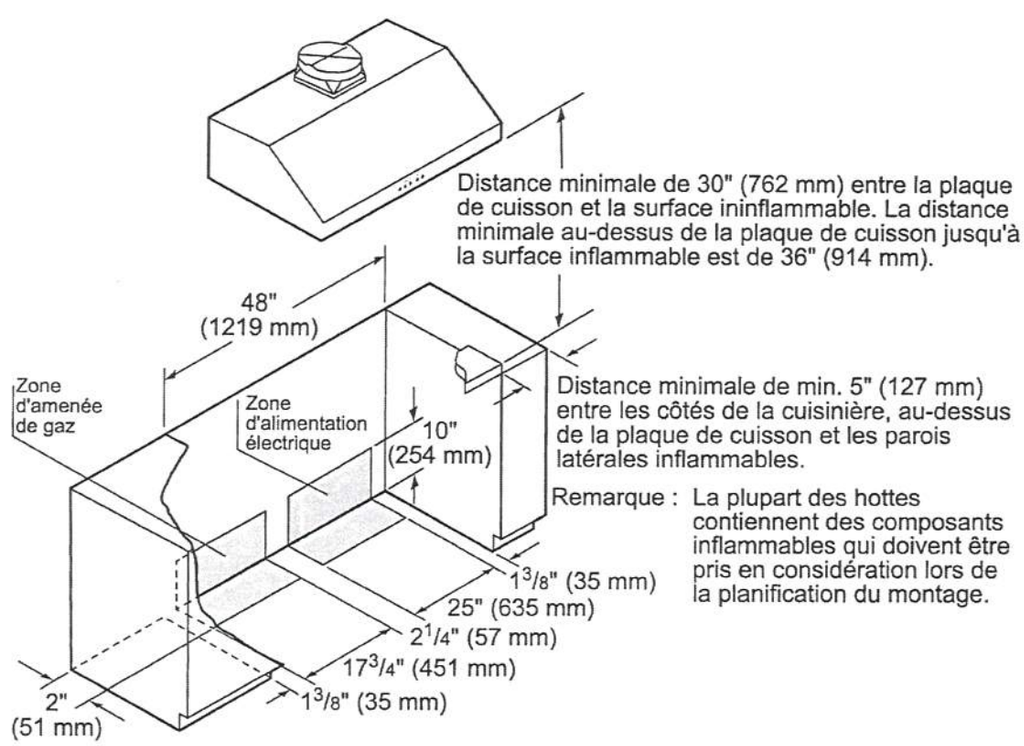

Dimensions en pouces (mm)

PV-83 attached
Feb. 12, 2021

PRD486WIGC

48-INCH DUAL-FUEL PRO GRAND® INDUCTION RANGE

PROFESSIONAL SERIES, COMMERCIAL-DEPTH, PORCELAIN COOKTOP SURFACE

Thermador

48-INCH RANGE CUTOUT DIMENSIONS

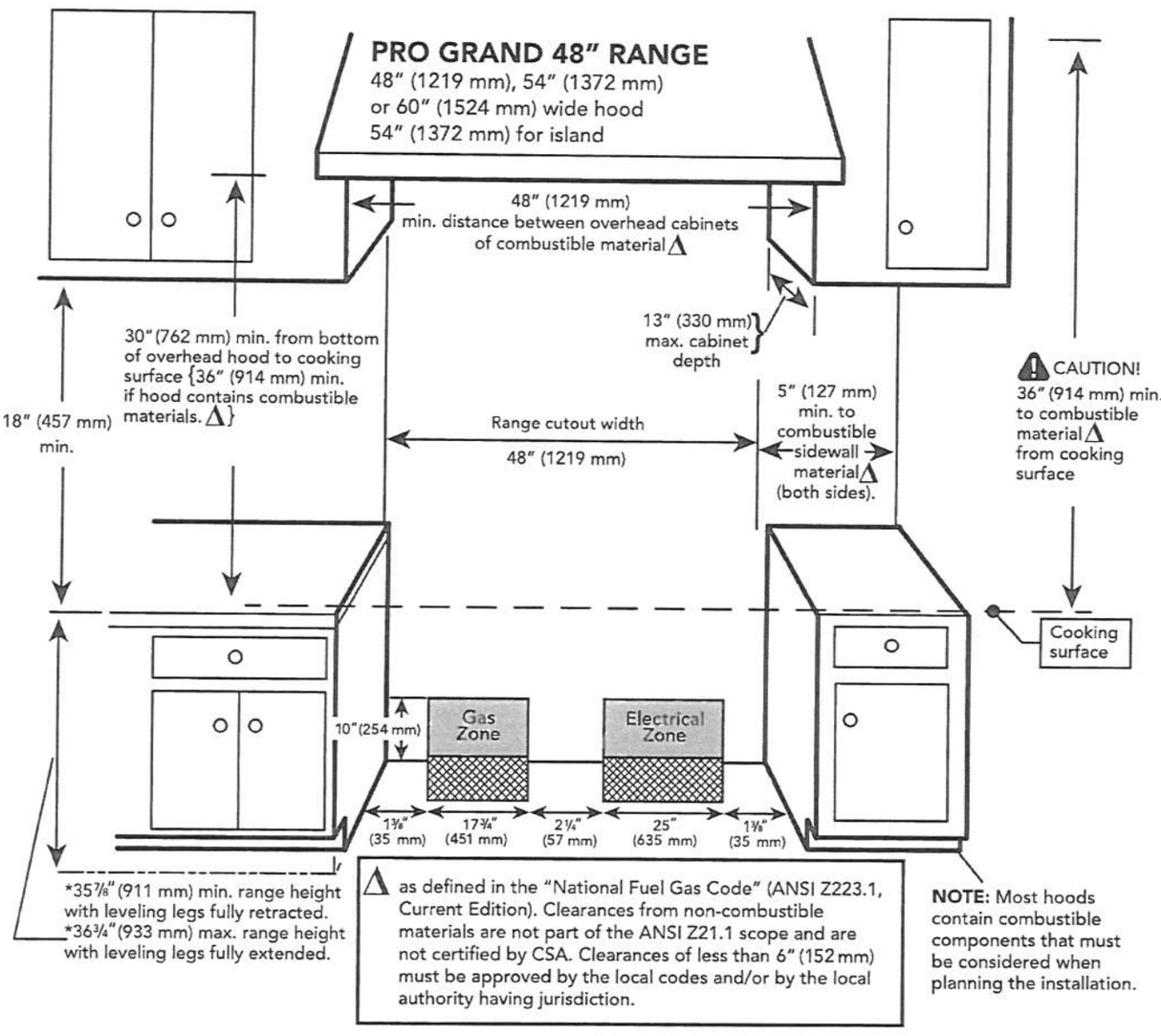

PV-83 attached
Feb. 12, 2021

PRD486WIGC

48-INCH DUAL-FUEL PRO GRAND® INDUCTION RANGE

PROFESSIONAL SERIES, COMMERCIAL-DEPTH, PORCELAIN COOKTOP SURFACE

Thermador

48-INCH RANGE DIMENSIONS AND CLEARANCE REQUIREMENTS WITH "LOW BACK"

NOTE: A 36-inch minimum clearance is required between the top of the cooking surface and the bottom of an unprotected cabinet. A 30-inch clearance can be used when the bottom of the wood or metal cabinet is protected by not less than 1/4 inch of a flame retardant material covered with not less than No. 28 MSG sheet steel, 0.015 inch (0.4 mm) thick stainless steel, 0.024 inch (0.6 mm) aluminum, or 0.020 inch (0.5 mm) thick copper.

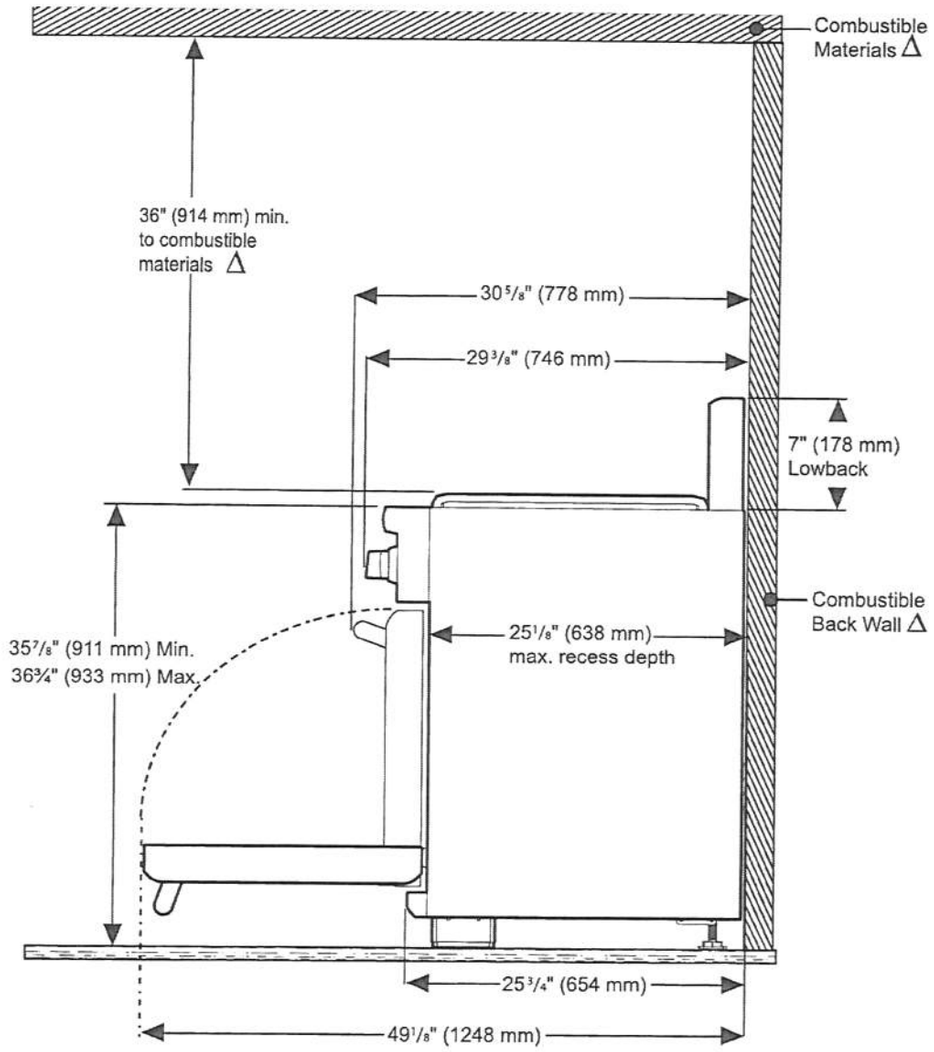

Δ As defined in the "National Fuel Gas Code" (ANSI Z223.1, Current Edition). Clearances from non-combustible materials are not part of the ANSI Z21.1 scope and are not certified by CSA. Clearances of less than 6" (152 mm) must be approved by the local codes and/or by the local authority having jurisdiction.

PY-83 attached
Feb. 12, 2021

PRD486WIGC

48-INCH DUAL-FUEL PRO GRAND® INDUCTION RANGE

PROFESSIONAL SERIES, COMMERCIAL-DEPTH, PORCELAIN COOKTOP SURFACE

Thermador

48-INCH RANGE DIMENSIONS AND CLEARANCE REQUIREMENTS WITH "FLUSH ISLAND TRIM"

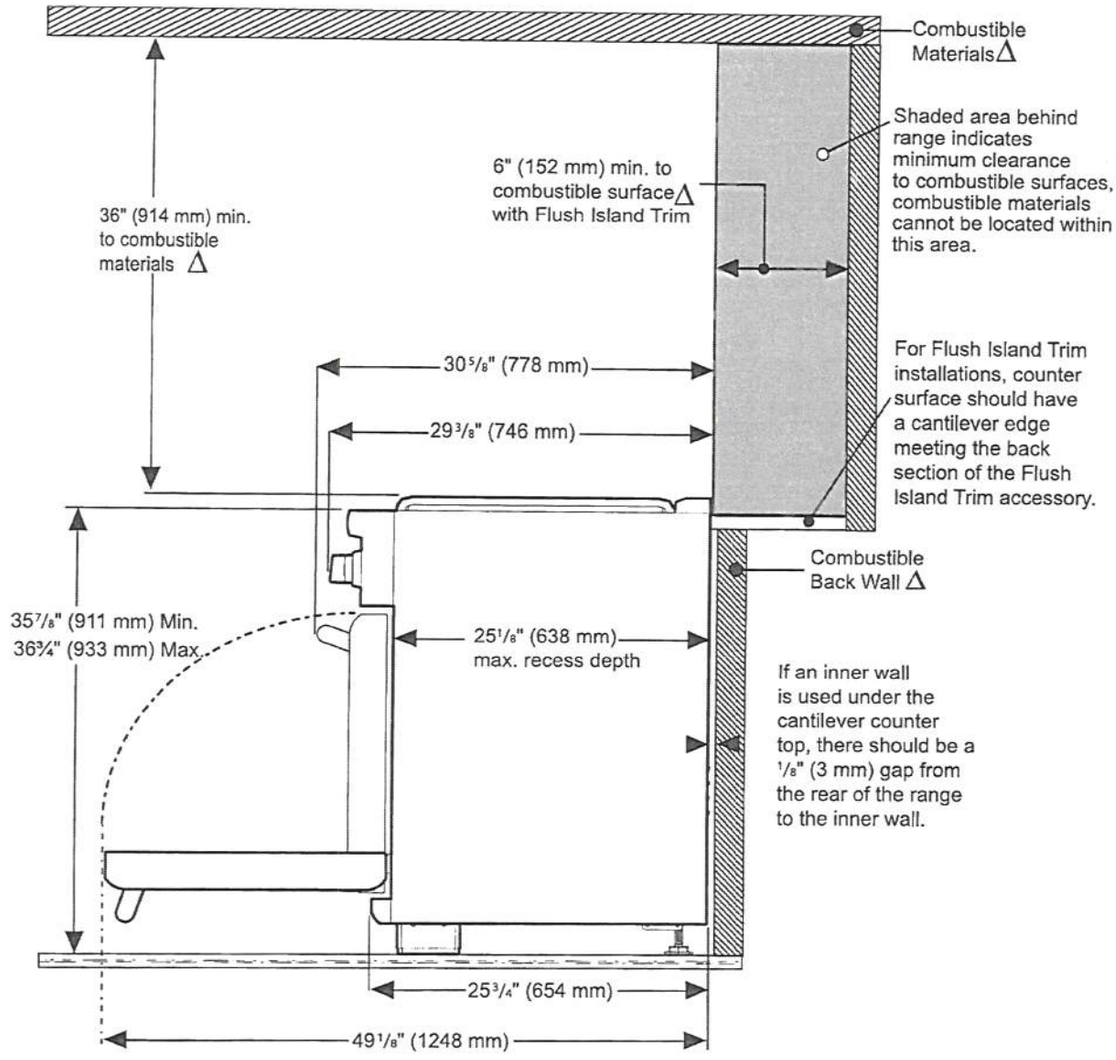

Δ As defined in the "National Fuel Gas Code" (ANSI Z223.1, Current Edition). Clearances from non-combustible materials are not part of the ANSI Z21.1 scope and are not certified by CSA. Clearances of less than 6" (152 mm) must be approved by the local codes and/or by the local authority having jurisdiction.

These warranties give you specific legal rights and you may have other rights that vary from state to state. Full warranty and limited warranty from date of installation. For complete warranty details, refer to your Use & Care manual, or ask your dealer.

Specifications are for planning purposes only. Refer to installation instructions and consult your countertop supplier prior to making counter opening. Consult with a heating and ventilation engineer for your specific ventilation requirements. For the most detailed information, refer to installation instructions accompanying product or write to Thermador indicating the model number. Specifications are correct at time of printing. Thermador reserves the right to change product specifications or design without notice. Some models are certified for use in Canada. Thermador is not responsible for products that are transported from the U.S. for use in Canada.

1 800 735 4328 | USA THERMADOR.COM | CANADA THERMADOR.CA | ©2019 BSH HOME APPLIANCES CORPORATION. ALL RIGHTS RESERVED.

PV-83 Attached
Feb 12, 2021

T30IF905SP

30-INCH BUILT-IN FREEZER COLUMN WITH INTERNAL ICE MAKER

FREEDOM® COLLECTION, PANEL-READY

Thermador

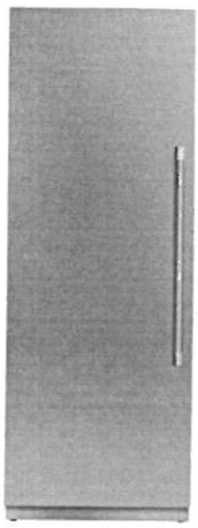

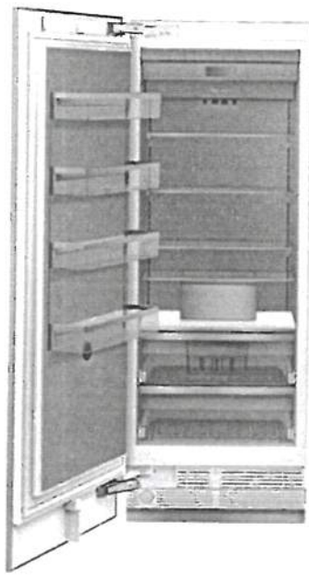

Home Connect

FEATURES & BENEFITS

- Full Stainless Steel Inner Liner
- Freedom® Hinge enables true flush design
- Auto Door Opening provides the opening of the door with just a slight push or pull
- SoftClose® Drawers for easy and controlled storage
- Sleek clean design for the perfect symmetry when paired with additional columns
- TFT control panel managing all your columns functions

TEMPERATURE RANGES	
Freezer	-11°F (-24°C) to 7°F (-14°C)
SuperFreeze®	-22°F (-30°C) for approximately 52 hours
Energy Saving (Economy) Mode	3°F (-16°C)

GENERAL PROPERTIES	
Home Connect™ (Wi-Fi Enabled)	Yes
Panel Ready	Yes
Reversible Door Swing	Yes
SoftClose® Door	Yes*
SoftClose® Drawers	Yes
Lighting	LED Sidewall and Theater Lighting
Freezer Shelves	4
Adjustable Shelves	3
Shelf Material	Glass w/Aluminum Profile
Full Extension Drawers @ 115° Door Opening Angle	Yes
General Use Drawer	2
Door Bins	4
External LED Proximity Sensor	No
Oversized Dispenser Opening	No
Chilled Water, Crushed and Cubed Ice	No
Rapid Water Replenishment System	No
Ice Maker with Diamond Ice System	Yes
Door Open Alarm	Yes
Open Door Assist	Yes
Special Modes	Sabbath, Economy, Vacation
CAPACITY	
Total Capacity (cu. ft.)	15.8 cu. ft.
PERFORMANCE	
Dedicated Evaporator & Compressor System	Yes
SuperFreeze®	Yes
Defrost Process	Frost-Free
TECHNICAL DETAILS	
Watts (W)	350 W
Current (A)	15 A
Volts (V)	110-120 V
Frequency (Hz)	60 Hz
Power Cord Length (in.)	118
Plug Type	120V-3 Prong
DIMENSIONS & WEIGHT	
Appliance Dimensions (H x W x D) (in.)	84"** x 29 3/4" x 24"
Required Cutout Size (H x W x D) (in.)	84" x 30" x 25"
Net / Gross Weight (lbs)	362 / 398 lbs
EFFICIENCY	
ENERGY STAR® Qualified	Yes
Annual Energy Consumption	479 kWh

*To verify if you have a refrigeration unit with Soft-Close capability please contact our customer team by calling 1-800-735-4328.
**Height adjustable + / -1/2" (+ / -13 mm)

PV-83 Approved
Feb. 12, 2021

T30IF905SP

30-INCH BUILT-IN FREEZER COLUMN WITH INTERNAL ICE MAKER

FREEDOM® COLLECTION, PANEL-READY

Thermador

WARRANTY	
Limited, Entire Appliance, Parts and Labor on Any Part of the Refrigerator that Fails Because of a Manufacturing Defect	2 Year
Limited Warranty for Sealed Refrigeration System*; Parts and Labor	3rd to 6th Year
Limited Warranty for Sealed Refrigeration System*; Parts Only	7th to 12th Year
Limited Warranty for Stainless Steel Rust-Through	Lifetime

*Sealed refrigeration system includes compressor, evaporator, condenser, dryer / strainer and connection tubing

CUTOUT DIMENSIONS

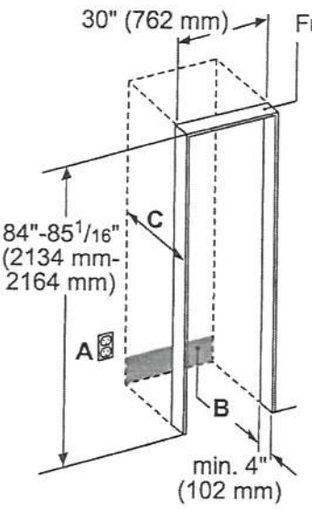

A: Area for installation of power connection.
B: Area for running the water line. It is recommended that the waterbox is placed adjacent to the installation cavity, so that it can be accessed for service without uninstalling the appliance. If this is not possible, place the recessed waterbox adjacent to the water supply socket elevated at the heights as referenced in areas A and B.
C: Niche depth depends on kitchen design. For a flush installation, the depth needs to be at least 24 inches plus the thickness of the door panel.

Stainless steel models contain a panel-ready base unit, ready-to-install stainless steel door(s) with a right or left door swing and handle(s).

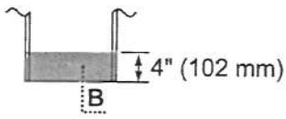

TOP VIEW CLEARANCE

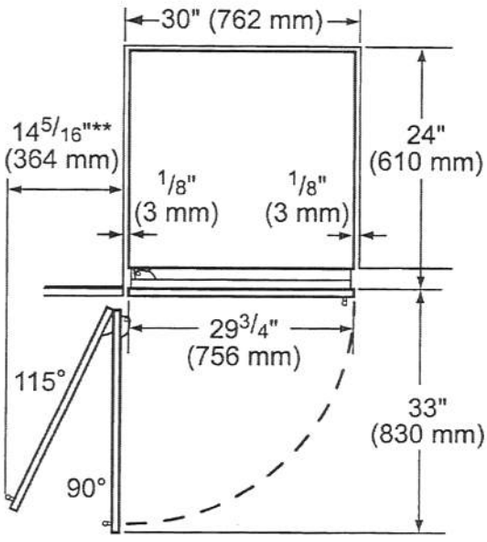

** Door handle must be added to this dimension

* Depends on the thickness of the unit door. 3/4" (19 mm) refers to the stainless steel door. (special accessory).

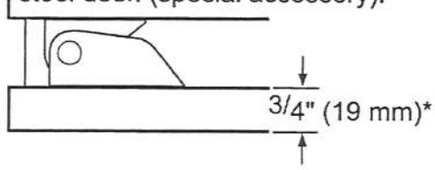

PV-83 attached
Feb. 12, 2021

T30IF905SP

30-INCH BUILT-IN FREEZER COLUMN WITH INTERNAL ICE MAKER

FREEDOM® COLLECTION, PANEL-READY

Thermador

PRODUCT AND PANEL DIMENSIONS

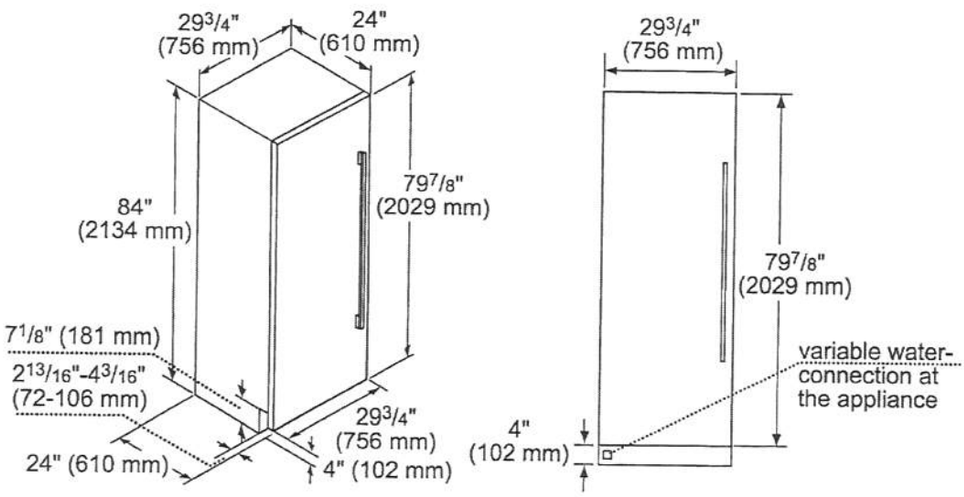

ACCESSORIES (OPTIONAL)

FLAT STAINLESS STEEL DOOR PANELS

30-Inch Flat Stainless Steel Door Panel Without Dispenser

TFL30IR800
For use with Handle

TFL30IR905
Handleless

NOTE: Handleless Panels should not be installed on units without the Soft-Close capability. If you are uncertain if you have a refrigeration unit with Soft-Close capability please contact our customer team by calling 1-800-735-4328.

HANDLES

Choose between two options:

PR36HNDL20
36-Inch Professional Series Handle

or

MS36HNDL20
36-Inch Masterpiece® Series Handle

STORAGE

ICEBUCKETL
Large Ice Bucket

FILTERS

REPLFLTR55
Freedom® Water Filter
Replacement water filter for use in all freezer and bottom freezer models

FRAMEKIT10

Freedom® Frame Kit
For any custom column installation in 24-inch deep cutouts. With two metal side trims whose placement between the interior cutout wall and the appliance helps overcome the challenge of unfinished cabinet returns.

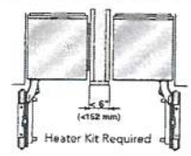

HEATRKIT20 – 13W @ 120V

Freedom® Heater Kit
When two appliances are installed side-by-side a sealing kit must be used. For combinations that involve a freezer column, this sealing kit is included. For all other (non-traditional, i.e. two wine columns, two bottom freezers, etc.) side-by-side combinations or instances where any appliances are installed less than 6-inches (152 mm) apart from one another but not connected side-by-side, purchase this kit. This kit is recommended for use with any installation in areas that are subject to humidity, or located next to an outside wall.

These warranties give you specific legal rights and you may have other rights that vary from state to state. Limited warranty from date of purchase. For complete warranty details, refer to your Use & Care manual, or ask your dealer.

Specifications are for planning purposes only. Refer to installation instructions and consult your countertop supplier prior to making counter opening. Consult with a heating and ventilation engineer for your specific ventilation requirements. For the most detailed information, refer to installation instructions accompanying product or write to Thermador indicating the model number. Specifications are correct at time of printing. Thermador reserves the right to change product specifications or design without notice. Some models are certified for use in Canada. Thermador is not responsible for products that are transported from the U.S. for use in Canada.

1 800 735 4328 | USA THERMADOR.COM | CANADA THERMADOR.CA | ©2020 BSH HOME APPLIANCES CORPORATION. ALL RIGHTS RESERVED.

PV-83 attached
Feb. 12, 2021

T30IR905SP

30-INCH BUILT-IN FRESH FOOD COLUMN

FREEDOM® COLLECTION, PANEL-READY

Thermador

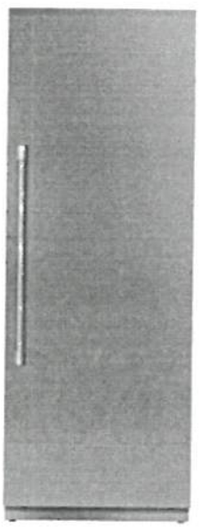

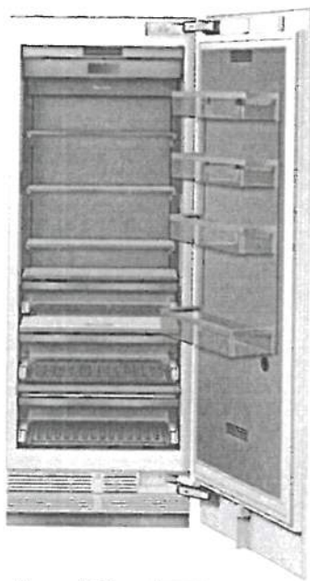

Home Connect

FEATURES & BENEFITS

- Full Stainless Steel Inner Liner
- Freedom® Hinge enables true flush design
- Auto Door Opening provides the opening of the door with just a slight push or pull
- ThermaFresh System, Humidity and Temperature controlled drawers
- SoftClose® Drawers for easy and controlled storage
- Sleek clean design for the perfect symmetry when paired with additional columns
- TFT control panel managing all your columns functions

TEMPERATURE RANGES	
Refrigerator	36°F (2°C) to 46°F (8°C)
Temperature Controlled Drawer	30°F (-1°C) to 38°F (3°C)
SuperCool	36°F (2°C) for approximately 6 hours
Energy Saving (Economy) Mode	43°F (6°C)

GENERAL PROPERTIES	
Home Connect™ (Wi-Fi Enabled)	Yes
Panel Ready	Yes
Reversible Door Swing	Yes
SoftClose® Door	Yes*
SoftClose® Drawers	Yes
Carbon Air Filter	Yes
Lighting	LED Sidewall and Theater Lighting
Refrigerator Shelves	4
Adjustable Shelves	3
Shelf Material	Glass w/Aluminum Profile
Full Extension Drawers @ 115° Door Opening Angle	Yes
Full Extension Drawers @ 90° Door Opening Angle	Yes
General Use Drawer	1
Humidity Managed Drawer	1
Temperature Controlled Drawer	1
Door Bins	3
Gallon Door Bins	1
Door Open Alarm	Yes
Open Door Assist	Yes
Special Modes	Sabbath, Economy, Vacation
CAPACITY	
Total Capacity (cu. ft.)	16.8 cu. ft.
PERFORMANCE	
Dedicated Evaporator & Compressor System	Yes
Freeflow® Cold Air System	Yes
SuperCool	Yes
TECHNICAL DETAILS	
Watts (W)	350 W
Current (A)	15 A
Volts (V)	110-120 V
Frequency (Hz)	60 Hz
Power Cord Length (in.)	118
Plug Type	120V-3 Prong
DIMENSIONS & WEIGHT	
Appliance Dimensions (H x W x D) (in.)	83 3/4"** x 29 3/4" x 24"
Required Cutout Size (H x W x D) (in.)	84" x 30" x 25"
Net / Gross Weight (lbs)	366 / 403 lbs
EFFICIENCY	
ENERGY STAR® Qualified	Yes
Annual Energy Consumption	279 kWh

*To verify if you have a refrigeration unit with Soft-Close capability please contact our customer team by calling 1-800-735-4328.
**Height adjustable + / -1/2" (+ / -13 mm)

PV-83 attached
Feb. 12, 2021

T30IR905SP

30-INCH BUILT-IN FRESH FOOD COLUMN

FREEDOM® COLLECTION, PANEL-READY

Thermador

WARRANTY	
Limited, Entire Appliance, Parts and Labor on Any Part of the Refrigerator that Fails Because of a Manufacturing Defect	2 Year
Limited Warranty for Sealed Refrigeration System*; Parts and Labor	3rd to 6th Year
Limited Warranty for Sealed Refrigeration System*; Parts Only	7th to 12th Year
Limited Warranty for Stainless Steel Rust-Through	Lifetime

*Sealed refrigeration system includes compressor, evaporator, condenser, dryer / strainer and connection tubing

CUTOUT DIMENSIONS

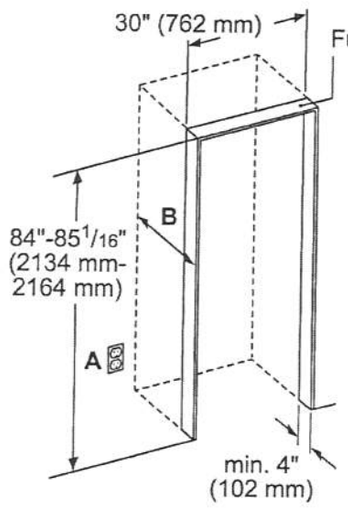

A: Area for installation of power connection.

B: Recess depth depends on kitchen design.

TOP VIEW CLEARANCE

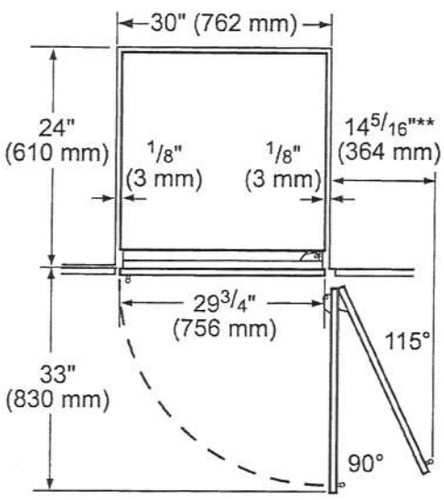

** Door handle must be added to this dimension

* Depends on the thickness of the furniture door. 3/4" (19 mm) is relevant for the stainless steel door. (special Accessory).

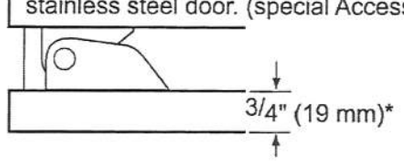

PV-83 attached
Feb. 12, 2021

T30IR905SP
30-INCH BUILT-IN FRESH FOOD COLUMN
FREEDOM® COLLECTION, PANEL-READY

Thermador

PRODUCT AND PANEL DIMENSIONS

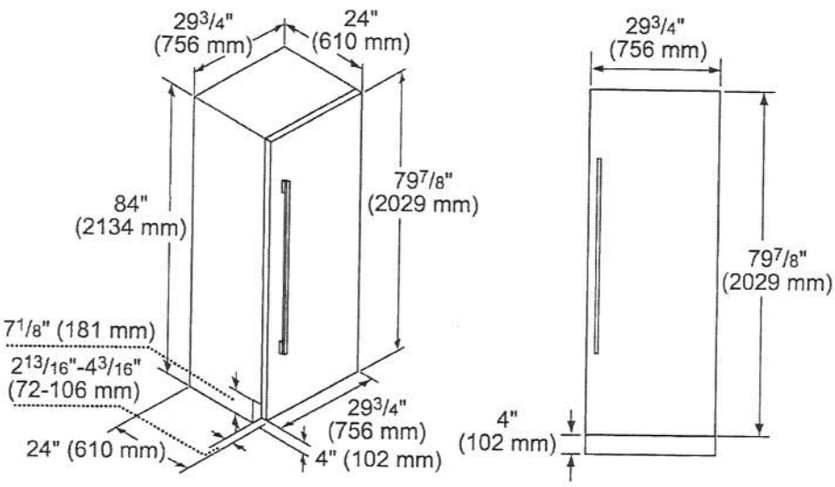

ACCESSORIES (OPTIONAL)

FLAT STAINLESS STEEL DOOR PANELS

30-Inch Flat Stainless Steel Door Panel

TFL30IR800
For use with Handle

TFL30IR905
Handleless

NOTE: Handleless Panels should not be installed on units without the Soft-Close capability. If you are uncertain if you have a refrigeration unit with Soft-Close capability please contact our customer team by calling 1-800-735-4328.

HANDLES

Choose between two options:

PR36HNDL20
36-Inch Professional Series Handle

or

MS36HNDL20
36-Inch Masterpiece® Series Handle

STORAGE

SPRODBIN10
Small Produce Bin

LPRODBIN10
Large Produce Bin

30PRODRAIL
30-Inch Produce Railing

30HFGALBIN
30-Inch Half Gallon Bin

FRAMEKIT10
Freedom® Frame Kit
For any custom column installation in 24-inch deep cutouts. With two metal side trims whose placement between the interior cutout wall and the appliance helps overcome the challenge of unfinished cabinet returns.

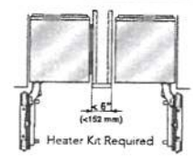

HEATRKIT20 – 13W @ 120V
Freedom® Heater Kit
When two appliances are installed side-by-side a sealing kit must be used. For combinations that involve a freezer column, this sealing kit is included. For all other (non-traditional, i.e. two wine columns, two bottom freezers, etc.) side-by-side combinations or instances where any appliances are installed less than 6-inches (152 mm) apart from one another but not connected side-by-side, purchase this kit. This kit is recommended for use with any installation in areas that are subject to humidity, or located next to an outside wall.

These warranties give you specific legal rights and you may have other rights that vary from state to state. Limited warranty from date of purchase. For complete warranty details, refer to your Use & Care manual, or ask your dealer.

Specifications are for planning purposes only. Refer to installation instructions and consult your countertop supplier prior to making counter opening. Consult with a heating and ventilation engineer for your specific ventilation requirements. For the most detailed information, refer to installation instructions accompanying product or write to Thermador indicating the model number. Specifications are correct at time of printing. Thermador reserves the right to change product specifications or design without notice. Some models are certified for use in Canada. Thermador is not responsible for products that are transported from the U.S. for use in Canada.

1 800 735 4328 | USA THERMADOR.COM | CANADA THERMADOR.CA | ©2020 BSH HOME APPLIANCES CORPORATION. ALL RIGHTS RESERVED.

PV-83 attached
Feb. 12, 2021

DWHD650WPR
EMERALD® 6-PROGRAM DISHWASHER
CUSTOM PANEL

Thermador

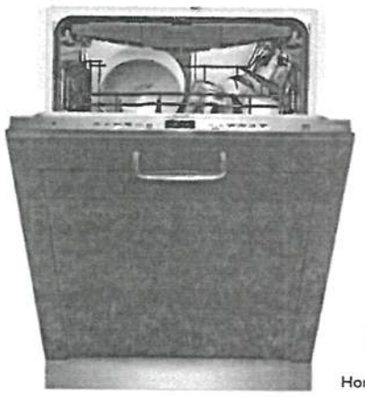

Home Connect

Also Available In:

DWHD650WFP – Flat Stainless Steel Panel with Professional Series Handle

DWHD650WFM – Flat Stainless Steel Panel with Masterpiece® Series Handle

FEATURES & BENEFITS

- Chef's Tool Drawer (3rd Rack) is designed to make loading and unloading tools and hard to place items extraordinarily easier
- Sens-A-Wash® measures water cleanliness and adjusts wash cycle
- Three stage advanced filtration recirculates water for sparkling results
- 3-Level adjustable upper rack is customizable for all of your needs, designed to be raised for extra large items placed on the bottom rack, or lowered to fit taller wine glasses on the upper rack
- Extra Dry Option adds extra heat to the final rinse to enhance drying results
- Impressively Quiet® — 48 dBA for peaceful kitchen experience
- Thermador Connected Experience by Home Connect brings exclusive dish features that keep you connected. Always.

ACCESSORIES (OPTIONAL)

Dishwasher Supply and Drainage Hose Extension 76 3/4"	SGZ1010UC
Dishwasher Accessory Kit	SMZ5000
Fine Silverware Carafe	SMZ5002UC
Junction Box	SMZPCJB1UC

Accessory Kit includes Extra-Tall-Item Sprinkler, Vase / Bottle Holder, 3 Plastic Item Clips and Small Item Basket

Fine Silverware Carafe

GENERAL PROPERTIES	
Number Of Wash Cycles	6
Number Of Options	5
dBA	48
Third Rack	Chef's Tool Drawer®
Rack Adjustability	Rackmatic 3-Stage
Tub Material	Stainless Steel
Control Type	Touch Control
Concealed Water Heating Element	Yes
Leak Protection System	24/7 AquaStop®
Water Softener	No
Five-Level Wash	Yes
Childlock	No
Home Connect (Wi-Fi Enabled)	Yes
EFFICIENCY	
Water Usage Per Cycle (g)	3.5 g
Energy Efficiency Class	Tier 1
ENERGY STAR® Certified	Yes
Total Annual Energy Consumption (kWh)	269 kWh
Total Annual Water Consumption (g)	624 g
CAPACITY	
Number Of Place Settings	16
TECHNICAL DETAILS	
Watts (W)	1,440 W
Current (A)	12 A
Volts (V)	120 V
Frequency (Hz)	60 Hz
Power Cord Length (in)	67"
Power Cord Install Length from Corner of Unit when Facing the Door (in)*	Left - 45" Right - 56"
Minimum Water Pressure (lb/sin)	14
Max. Temperature for Water Intake	140° F
Length Inlet Hose (in)	N/A
Length Outlet Hose (in)	79"
DIMENSIONS & WEIGHT	
Overall Appliance Dimensions (HxWxD) (in)	33 7/8" x 23 9/16" x 23 1/16"
Required Cutout Size (HxWxD) (in)	33 7/8" Min. x 23 5/8" Min. x 24"
Adjustable Feet	Yes
Net Weight (lbs)	88 lbs

*September 2020 running production change to remove adhesive routing clips for power cord. These clips and the edge protector are now included in the dishwasher accessory kit #SMZEPCC1UC.

PV-83 attached
Feb. 12, 2021

DWHD650WPR
EMERALD® 6-PROGRAM DISHWASHER
CUSTOM PANEL

Thermador

WARRANTY	
Limited Warranty, Entire Appliance, Parts and Labor	2 Year
Limited Warranty for Microprocessor or Printed Circuit Board; Parts Only	3rd to 5th Year
Limited Warranty for Racks (Does Not Include Rack Components); Parts Only	3rd to 5th Year
Limited Warranty for Rust-through On Inner Tub Liner; Parts Only	Lifetime

DISHWASHER & CUTOUT DIMENSIONS

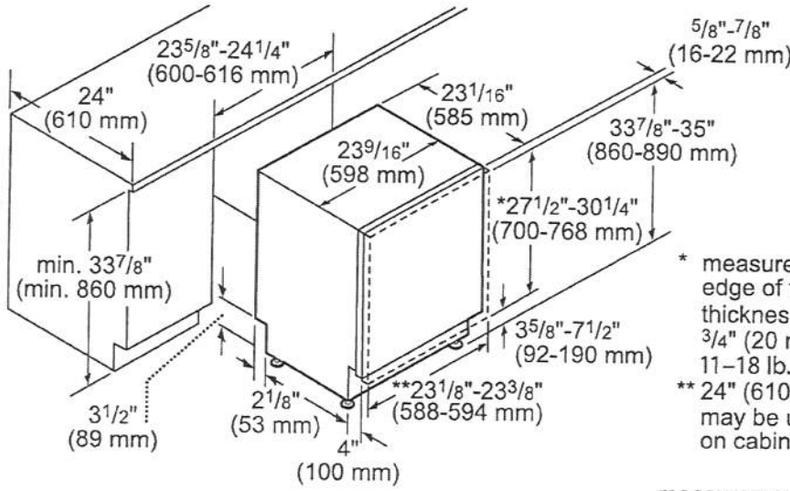

* measured from the bottom edge of the countertop panel thickness recommended 3/4" (20 mm) panel weight 11–18 lb. (5–8 kg)
** 24" (610 mm) wide panel may be used depending on cabinet design

measurements in inches and mm

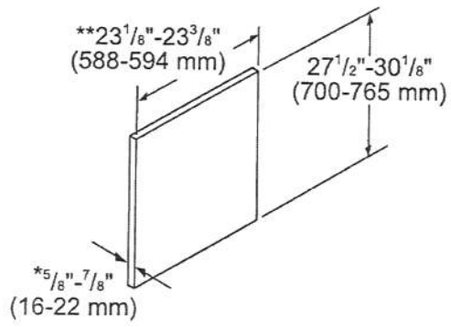

* thickness recommended 3/4" (20 mm), panel weight 11–18 lb. (5–8 kg)
** 24" (610 mm) wide panel may be used depending on cabinet design

measurements in inches and mm

These warranties give you specific legal rights and you may have other rights that vary from state to state. Full warranty and limited warranty from date of installation. For complete warranty details, refer to your Use & Care manual, or ask your dealer.

Specifications are for planning purposes only. Refer to installation instructions and consult your countertop supplier prior to making counter opening. Consult with a heating and ventilation engineer for your specific ventilation requirements. For the most detailed information, refer to installation instructions accompanying product or write to Thermador indicating the model number. Specifications are correct at time of printing. Thermador reserves the right to change product specifications or design without notice. Some models are certified for use in Canada. Thermador is not responsible for products that are transported from the U.S. for use in Canada.

1 800 735 4328 | USA THERMADOR.COM | CANADA THERMADOR.CA | ©2020 BSH HOME APPLIANCES CORPORATION. ALL RIGHTS RESERVED.

PV-83 attached
Feb. 12, 2021

SHARP

SMD2477ASC

24-INCH MICROWAVE DRAWER® OVEN

TAKE YOUR MICROWAVE TO A BETTER PLACE

It's your kitchen, your design and your lifestyle. Sharp's Microwave Drawer Oven allows you to focus on the design elements you prefer by removing the microwave from sightlines and enabling more design versatility. The Microwave Drawer offers flexible placement options below an island, peninsula, or standard cabinetry, and can also be installed adjacent to your wall oven. The Microwave Drawer allows you to showcase your design savvy and create a kitchen that flows with your lifestyle.

Sharp introduces the next generation of this successful appliance—model SMD2477ASC - a 24" microwave drawer with a simpler and a sleeker design to match more built-in appliances.

Design Flexibility

Sharp's Microwave Drawer product expands the option for microwave placement in almost any kitchen plan— it's a perfect choice for open-plan kitchens, islands, peninsulas, and a great addition to wet bars, family rooms and home theatres.

Location and Counter Space Saving

You may place the drawer under a counter, cooktop or wall oven or above a warming drawer without a built-in kit, additional trim or venting. Sharp microwave drawer provides the best solution for a cleaner, uncluttered counter space.

SHARP's Exclusive AutoTouch™ System

Sharp's exclusive AutoTouch™ system allows you to open and close the drawer automatically at one-finger operation by pressing a button on the control panel.

New Hidden Control Panel

The new SMD2477ASC model features a hidden control panel which gives a more integrated look and feel within the kitchen. The new tall control panel, angled at 45° degrees, is easy to see, easy to access and easy to use.

Specifications

TECHNICAL SPECIFICATIONS	
Size	24" wide
Microwave Capacity	1.2 cu.ft
Microwave Power	950 watts
Control Panel	Digital LCD Display
Control Type	Hidden Control Panel
Drawer Opening	AutoTouch™ System
Power Level	11
Sensor Cook, Reheat, Popcorn Settings	13
Reheat Auto Settings	2
Defrost Auto Settings	6
Keep Warm Setting	Yes, up to 30 min.
Melt / Soften / Settings	Yes
Beverage Setting	Yes
Programmable Stages	Yes, 4
Digital Clock	Yes
Kitchen Timer	Yes
Child Lock	Yes
+30 sec	Yes
Interior Oven Light	Yes

TECHNICAL SPECIFICATIONS CONTINUED	
Demonstration Mode	Yes
Built-in Ready	Yes
Available Colour	Stainless Steel
Accessory	SKMD24F0AS
DIMENSIONS/WEIGHT(inches/lbs.)	
Cut-out Dimension	22 1/8" x 15 9/16"
Product Dimension	23 7/8" x 23 1/64" x 15 7/8"
Box Dimension	29.8" w x 27.9" x 21.9"
Net Weight	74 lb.
Gross Weight	85.8 lb.
POWER/SAFETY	
Power / Ratings	120V, 60Hz
Ratings	1.67Kw, 14.5Amps
Safety Compliance	FCC, DHHS, cUL
WARRANTY/UPC	
Warranty	1 year parts & labour with in-home service; 4 additional years for magnetron tube only
UPC	074000619944

5-03-2016

PV-83 attached
Feb. 12, 2021

SHARP

SMD2477ASC

Installation Guide

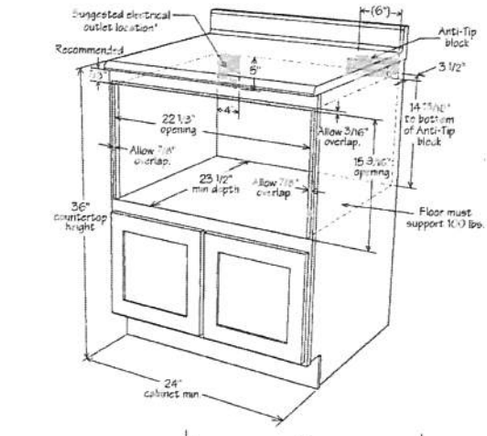

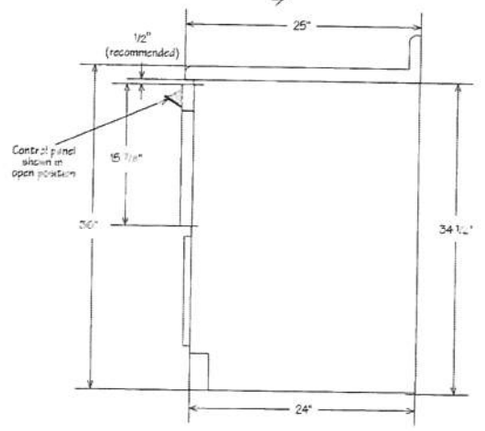

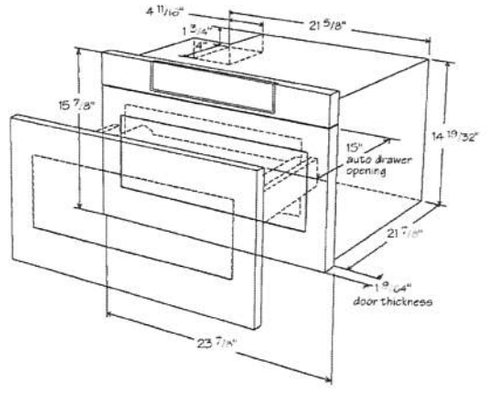

© 2016 Sharp Electronics Corporation. All rights reserved.
Product specification and design are subject to change without notice.

SHARP ELECTRONICS OF CANADA LTD.
335 Britannia Road East, MISSISSAUGA, ONTARIO, L4Z 1W9
www.sharp.ca

PV-83
Feb 12, 2021

Fresh Living Tip

If you love wine and good food with equal enthusiasm, consider this model. It offers the most versatility between wine storage and flat shelving for food and beverages than any other model in the Marvel lineup. Plus each shelf glides out to access contents easily.

FINISH OPTIONS

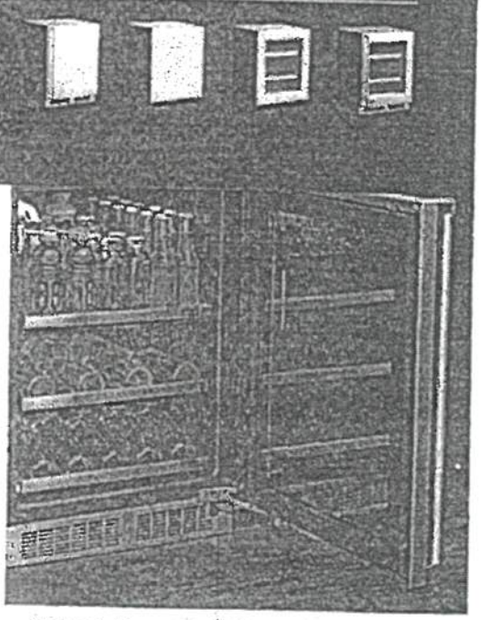

24" Marvel Professional Beverage Center

MPBV424

Performance

- 5.5 cu. ft. capacity stores 19 wine bottles total (14 flat, 5 cradled) and holds (108) 12-oz cans
- (2) 3-in-1 Slide-Out Split Convertible Shelves feature removable glass pane with wine rack option to store beverages, food or wine
- Display wine rack glides out for easy access and holds 5 wine bottles, including magnum sizes
- Access contents easily with full-extension shelf, glideout shelving on the smooth-glide ball bearing system
- Cantilevered shelving system adjusts height to your storage needs

Cooling Performance

- Dynamic cooling technology delivers rapid cool down, frost-free operation and precise temperature stability
- Thermal-efficient cabinet ensures optimum food preservation and energy efficiency while maximizing capacity
- Argon-filled, UV-resistant tinted dual pane glass door protects contents from damaging ultraviolet light and helps conserve energy

Convenient Controls

- Multifunction controls allow you to select a precise cabinet temperature from 33°F to 70° F
- Audible alarms for door ajar and high/low temperature ensure your contents stay at optimal temperature
- At the touch of a button, change the interior light color to sapphire blue or arctic white
- Theater-style display lighting gently brightens as door is opened and dims to off when closed

Fit & Finish

- Elegant midnight black interior
- Professional styling: robust full-length handle and stainless steel accents
- Reversible soft-close door allows for right or left swing
- Door lock provides added security

Warranty

- 3-year parts and labor warranty with product registration and 5-year sealed system parts warranty

A dynamic food, beverage and wine storage solution, this adaptable beverage center features two versatile glass shelves that convert to a wine rack option. An additional display wine rack can hold a variety of bottle types, including magnum sizes.

3-in-1 Convertible Shelf

DOOR STYLE	MODEL NUMBER
Stainless Steel Frame Glass	MPBV424-SG31A
Panel Ready Frame Glass	MPBV424-IG31A
Solid Panel Ready	MPBV424-IS31A
Solid Stainless Steel	MPBV424-SS31A

MARVEL

PV-83
Feb 12, 2021

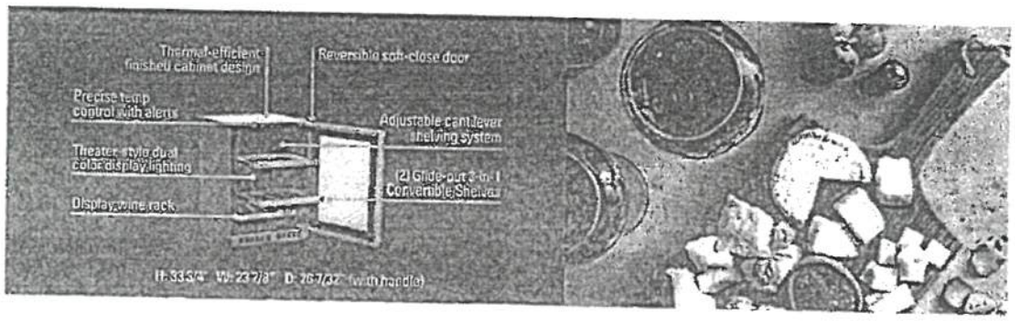

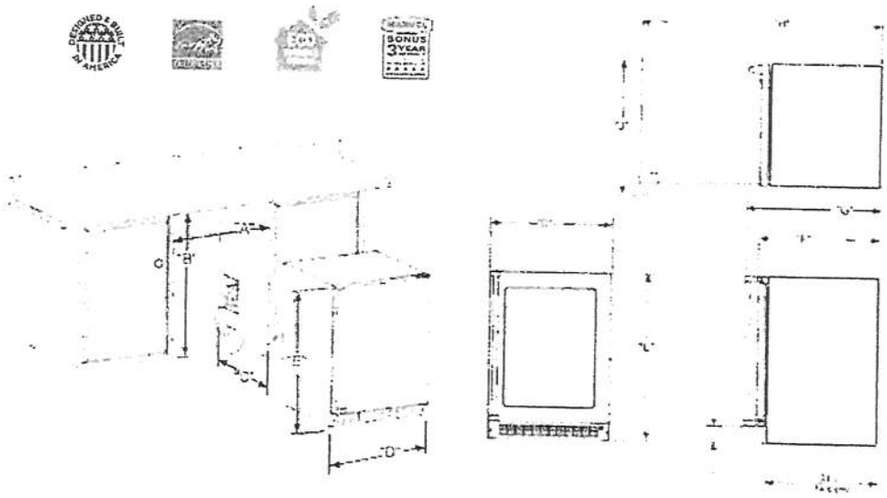

Rough In Dimensions*

"A"	"B"	"C"
24"	34-1/4" to 35-1/4"	24"
(61 CM)	87 CM to 89 3 CM)	(61 CM)

Cabinet Dimensions*

"D"	"E"	"F"	"G"	"H"	"J"
23-7/8"	33-5/8" TO 34-5/8"	23-5/8"*	25-1/8"*	47-3/4"*	26-1/2"*
(60 7 CM)	(85 4 CM TO 87 9 CM)	(60 CM)	(65 3 CM)	(146 6 CM)	(67 3 CM)

*Stainless steel model dimensions only. For panel-ready models, see the owner's guide online at marvelrefrigeration.com.

Capacity	5.5 CU. FT.
Control Type	Electronic
Sabbath Mode	Yes
Temperature Range	33°F to 70°F
Handle Style	Professional (handle not included on panel-ready models)
Hinge Type	Reversible Soft-Close
Interior Lighting	White + Blue LED
Shelving System	Cantilever
Toe Grille Finish	Stainless Steel (Black on Panel-Ready Models)

Lock	Yes
Electrical Requirements	115V / 60 Hz / 15A
Cord Length	6 FT.
Shipping Dimensions	28" W x 31" D x 37" H
Shipping Weight	160 LBS
Agency Approval	UL
Refrigerant Type	R600a

For comprehensive installation instructions, including panel overlay details, please visit marvelrefrigeration.com to access the owner's guide.

MARVEL

PV-83 Feb 12, 2021

PRD486WIGC

48-INCH DUAL-FUEL PRO GRAND® INDUCTION RANGE

PROFESSIONAL SERIES, COMMERCIAL-DEPTH, PORCELAIN COOKTOP SURFACE

Thermador.

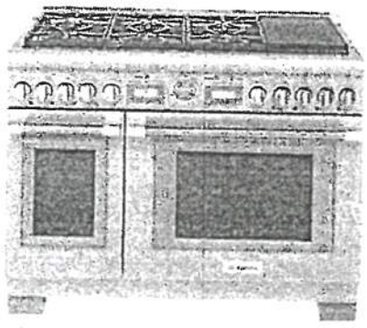

home connect

FEATURES & BENEFITS

- ★ - 4 ExtraLow® burners for simmering, melting, or holding long durations
- ★ - ExtraHigh Star® Burner—22,000 BTUs of power for searing or boiling
- ★ - Hydraulic SoftClose® hinges prevent slamming for ultra smooth closing
- 3,600W induction: rapid boiling and full surface heating for griddles
- Superfast 2.5-hour self-clean mode-fastest in the industry

TECHNICAL DETAILS

Circuit Breaker	50 A
Volts	240 / 208 V, 60Hz 4 Wire
Energy Source	Gas and Electric
Plug Type	208 / 240V 4 Prong
Power Cord Length	Purchase Separately
Gas Supply	3/4"

WARRANTY

Limited Warranty, Entire Appliance, Parts and Labor	2 Year

SEE PAGE 2 FOR INCLUDED AND OPTIONAL ACCESSORIES

RANGETOP

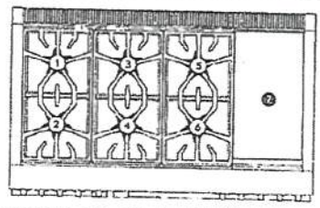

Total Number of Cooktop Burners	6 + Induction
1 – Power of Back Left Burner BTU	15,000 and XLO
2 – Power of Front Left Burner BTU	22,000 and XHI / XLO
3 – Power of Back Center Burner BTU	15,000
4 – Power of Front Center Burner BTU	18,000
5 – Power of Right Back Center Burner BTU	15,000 and XLO
6 – Power of Right Front Center Burner BTU	18,000 and XLO
7 – Power of Far Right 12" Induction	3,600 W

OVEN

Oven Capacity (Lg / Sm)	5.7 / 2.5 cu. ft.
Cooking Modes – Large Cavity	Bake, Convection Bake, True Convection, Convection Roast, Roast, Convection Broil, Broil
Cooking Modes – Small Cavity	Bake, Convection Bake, Proof, Keep Warm, Convection Roast, Roast, Convection Broil, Broil
Sabbath (Lg / Sm)	Yes / Yes
Self-Clean (Lg / Sm)	Yes / Yes
Telescopic Rack(s) (Lg / Sm)	3 / 2
Interior Lights (Lg / Sm)	2 / 1
Bake Power (Lg / Sm)	2,000 W / 1,400 W
Broil Power (Lg / Sm)	4,000 W / 2,600 W
Convection Power (Lg / Sm)	2,750 W / 1,960 W
Home Connect™ (Wi-Fi Enabled)	Yes, Large Oven Only
Lg Cavity Interior Dimensions (HxWxD)	16 1/4" x 28" x 21 1/2"
Lg Cavity Usable Dimensions (HxWxD)	12" x 25 3/8" x 19 1/2"
Sm Cavity Interior Dimensions (HxWxD)	16 1/4" x 12 3/8" x 21 1/2"
Sm Cavity Usable Dimensions (HxWxD)	12" x 9 3/4" x 19 1/2"

DIMENSIONS & WEIGHT

Overall Appliance Dimensions (HxWxD)	35 3/4" – 36 3/4" x 47 15/16" x 27 7/8"
Required Cutout Size (HxWxD)	35 3/4" – 36 3/4" x 48" x 24" – 25 1/8"
Net Weight	530 lbs.

★ THERMADOR® EXCLUSIVE

PV-83
Feb. 12, 2021

PRD486WIGC

48-INCH DUAL-FUEL PRO GRAND® INDUCTION RANGE

PROFESSIONAL SERIES, COMMERCIAL-DEPTH, PORCELAIN COOKTOP SURFACE

Thermador

48-INCH RANGE DIMENSIONS

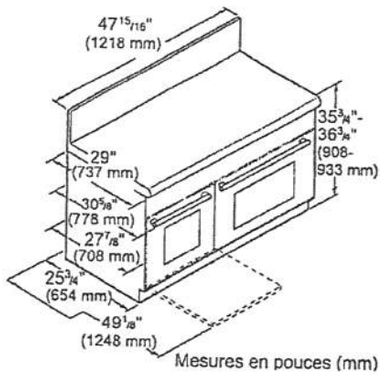

Mesures en pouces (mm)

48-INCH RANGE CUTOUT DIMENSIONS

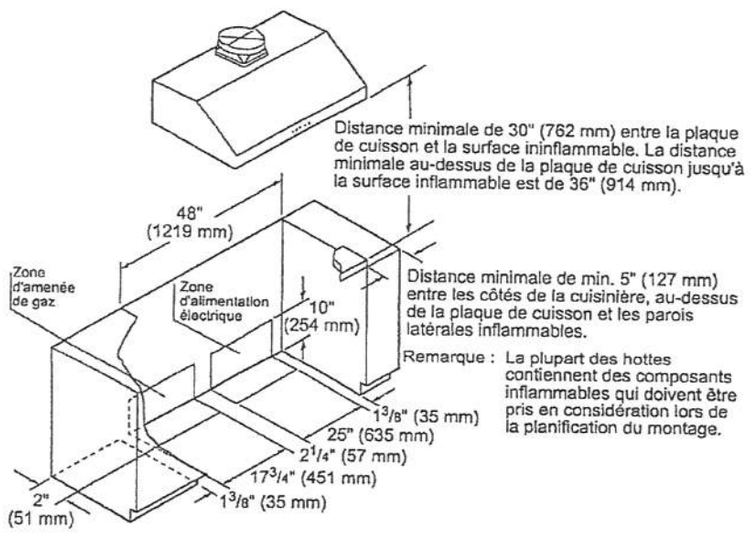

Dimensions en pouces (mm)

PV-83
Feb. 12, 2021

PRD486WIGC

48-INCH DUAL-FUEL PRO GRAND® INDUCTION RANGE

PROFESSIONAL SERIES, COMMERCIAL-DEPTH, PORCELAIN COOKTOP SURFACE

Thermador

48-INCH RANGE CUTOUT DIMENSIONS

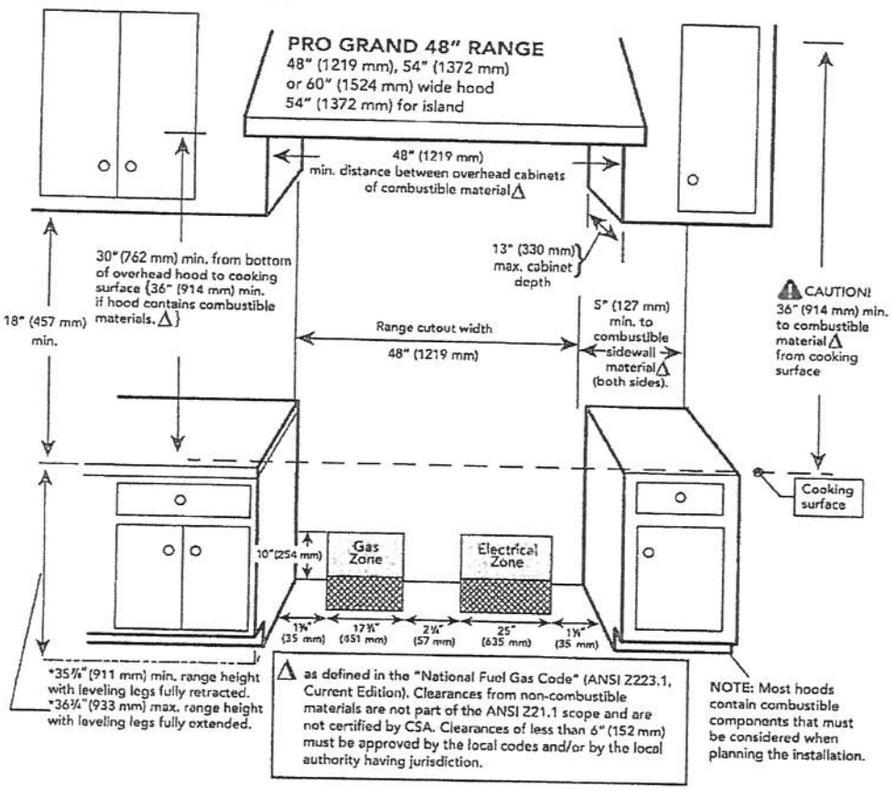

PV-83 (MP) (SA)
Feb. 12, 2021

PRD486WIGC

48-INCH DUAL-FUEL PRO GRAND® INDUCTION RANGE

PROFESSIONAL SERIES, COMMERCIAL-DEPTH, PORCELAIN COOKTOP SURFACE

Thermador

48-INCH RANGE DIMENSIONS AND CLEARANCE REQUIREMENTS WITH "LOW BACK"

NOTE: A 36-inch minimum clearance is required between the top of the cooking surface and the bottom of an unprotected cabinet. A 30-inch clearance can be used when the bottom of the wood or metal cabinet is protected by not less than 1/4 inch of a flame retardant material covered with not less than No. 28 MSG sheet steel, 0.015 inch (0.4 mm) thick stainless steel, 0.024 inch (0.6 mm) aluminum, or 0.020 inch (0.5 mm) thick copper.

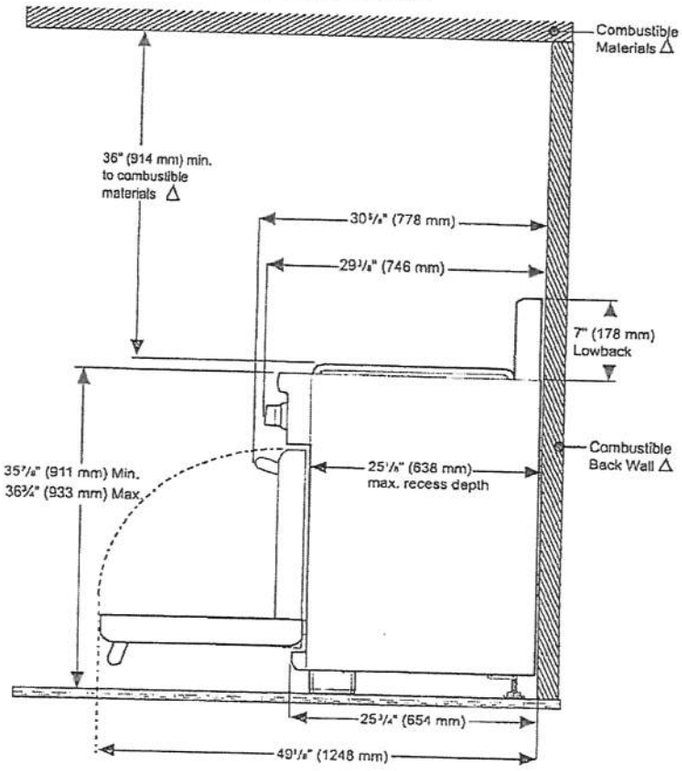

△ As defined in the "National Fuel Gas Code" (ANSI Z223.1, Current Edition). Clearances from non-combustible materials are not part of the ANSI Z21.1 scope and are not certified by CSA. Clearances of less than 6" (152 mm) must be approved by the local codes and/or by the local authority having jurisdiction.

PV-83
Feb. 12, 2021

PRD486WIGC

48-INCH DUAL-FUEL PRO GRAND® INDUCTION RANGE

PROFESSIONAL SERIES, COMMERCIAL-DEPTH, PORCELAIN COOKTOP SURFACE

Thermador

48-INCH RANGE DIMENSIONS AND CLEARANCE REQUIREMENTS WITH "FLUSH ISLAND TRIM"

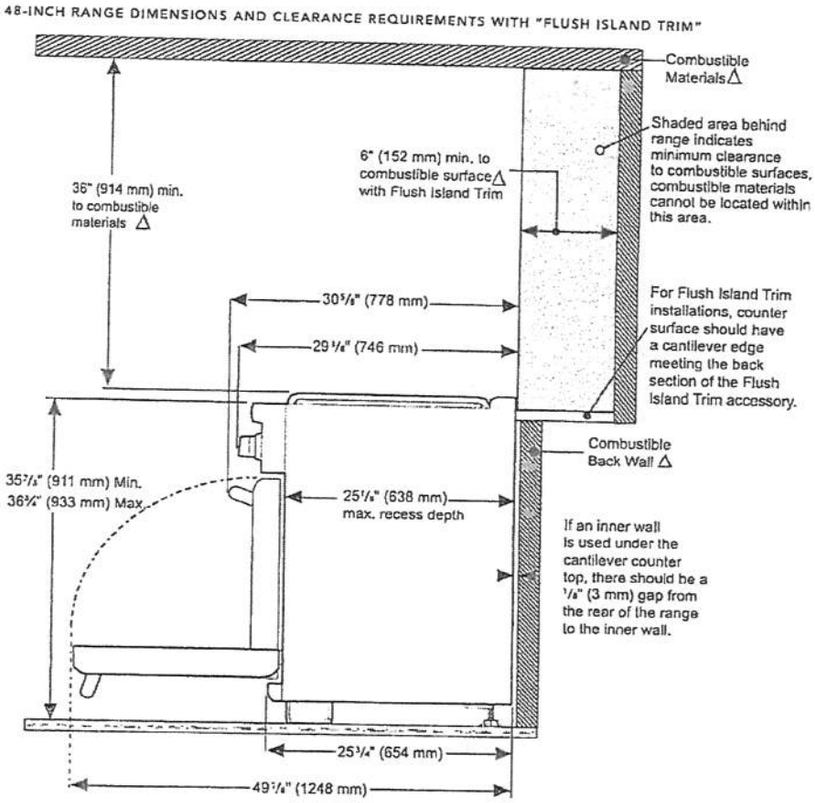

△ As defined in the "National Fuel Gas Code" (ANSI Z223.1, Current Edition). Clearances from non-combustible materials are not part of the ANSI Z21.1 scope and are not certified by CSA. Clearances of less than 6" (152 mm) must be approved by the local codes and/or by the local authority having jurisdiction.

These warranties give you specific legal rights and you may have other rights that vary from state to state. Full warranty and limited warranty from date of installation. For complete warranty details, refer to your Use & Care manual, or ask your dealer.

Specifications are for planning purposes only. Refer to installation instructions and consult your countertop supplier prior to making counter opening. Consult with a heating and ventilation engineer for your specific ventilation requirements. For the most detailed information, refer to installation instructions accompanying product or write to Thermador indicating the model number. Specifications are correct at time of printing. Thermador reserves the right to change product specifications or design without notice. Some models are certified for use in Canada. Thermador is not responsible for products that are transported from the U.S. for use in Canada.

1.800.735.4328 | USA.THERMADOR.COM | CANADA.THERMADOR.CA | © 2019 BSH HOME APPLIANCES CORPORATION. ALL RIGHTS RESERVED.

PV-83
Feb 12, 2021

T30IF905SP

30-INCH BUILT-IN FREEZER COLUMN WITH INTERNAL ICE MAKER

FREEDOM® COLLECTION, PANEL-READY

Thermador

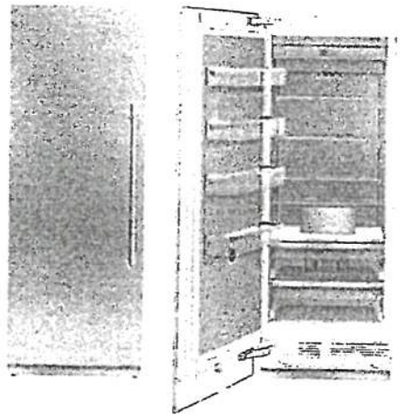

Home Connect

FEATURES & BENEFITS

- Full Stainless Steel Inner Liner
- Freedom® Hinge enables true flush design
- Auto Door Opening provides the opening of the door with just a slight push or pull
- SoftClose® Drawers for easy and controlled storage
- Sleek clean design for the perfect symmetry when paired with additional columns
- TFT control panel managing all your columns functions

TEMPERATURE RANGES	
Freezer	-11°F (-24°C) to 7°F (-14°C)
SuperFreeze®	-22°F (-30°C) for approximately 52 hours
Energy Saving (Economy) Mode	3°F (-16°C)

GENERAL PROPERTIES	
Home Connect™ (Wi-Fi Enabled)	Yes
Panel Ready	Yes
Reversible Door Swing	Yes
SoftClose® Door	Yes*
SoftClose® Drawers	Yes
Lighting	LED Sidewall and Theater Lighting
Freezer Shelves	4
Adjustable Shelves	3
Shelf Material	Glass w/Aluminum Profile
Full Extension Drawers @ 115° Door Opening Angle	Yes
General Use Drawer	2
Door Bins	4
External LED Proximity Sensor	No
Oversized Dispenser Opening	No
Chilled Water, Crushed and Cubed Ice	No
Rapid Water Replenishment System	No
Ice Maker with Diamond Ice System	Yes
Door Open Alarm	Yes
Open Door Assist	Yes
Special Modes	Sabbath, Economy, Vacation
CAPACITY	
Total Capacity (cu. ft.)	15.8 cu. ft.
PERFORMANCE	
Dedicated Evaporator & Compressor System	Yes
SuperFreeze®	Yes
Defrost Process	Frost-Free
TECHNICAL DETAILS	
Watts (W)	350 W
Current (A)	15 A
Volts (V)	110-120 V
Frequency (Hz)	60 Hz
Power Cord Length (in.)	118
Plug Type	120V-3 Prong
DIMENSIONS & WEIGHT	
Appliance Dimensions (H x W x D) (in.)	84"** x 29 3/4" x 24"
Required Cutout Size (H x W x D) (in.)	84" x 30" x 25"
Net / Gross Weight (lbs)	362 / 398 lbs
EFFICIENCY	
ENERGY STAR® Qualified	Yes
Annual Energy Consumption	479 kWh

*To verify if you have a refrigeration unit with Soft-Close capability please contact our customer team by calling 1-800-735-4328

**Height adjustable +/- 1/2" (+/- 13 mm)

PV-83 AP 21
Feb. 12, 2021

T30IF905SP

30-INCH BUILT-IN FREEZER COLUMN WITH INTERNAL ICE MAKER

FREEDOM® COLLECTION, PANEL-READY

Thermador

WARRANTY	
Limited, Entire Appliance, Parts and Labor on Any Part of the Refrigerator that Fails Because of a Manufacturing Defect	2 Year
Limited Warranty for Sealed Refrigeration System*; Parts and Labor	3rd to 6th Year
Limited Warranty for Sealed Refrigeration System*; Parts Only	7th to 12th Year
Limited Warranty for Stainless Steel Rust-Through	Lifetime

*Sealed refrigeration system includes compressor, evaporator, condenser, dryer / strainer and connection tubing

CUTOUT DIMENSIONS

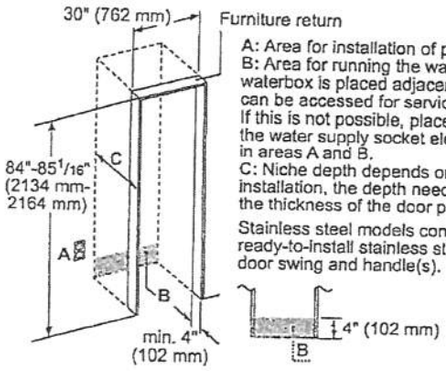

A: Area for installation of power connection.
B: Area for running the water line. It is recommended that the waterbox is placed adjacent to the installation cavity, so that it can be accessed for service without uninstalling the appliance. If this is not possible, place the recessed waterbox adjacent to the water supply socket elevated at the heights as referenced in areas A and B.
C: Niche depth depends on kitchen design. For a flush installation, the depth needs to be at least 24 inches plus the thickness of the door panel.

Stainless steel models contain a panel-ready base unit, ready-to-install stainless steel door(s) with a right or left door swing and handle(s).

TOP VIEW CLEARANCE

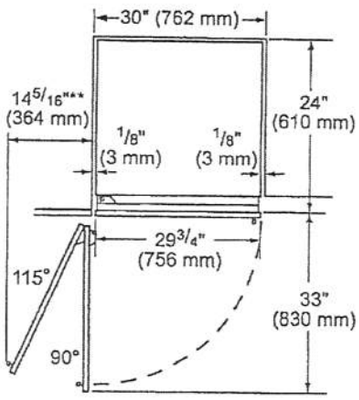

** Door handle must be added to this dimension

* Depends on the thickness of the unit door.
3/4" (19 mm) refers to the stainless steel door. (special accessory).

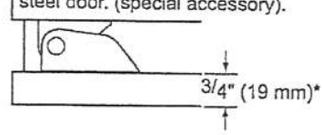

PV-83 (UP) (SP)
Feb. 12, 2021

T30IF905SP

30-INCH BUILT-IN FREEZER COLUMN WITH INTERNAL ICE MAKER

FREEDOM® COLLECTION, PANEL-READY

Thermador.

PRODUCT AND PANEL DIMENSIONS

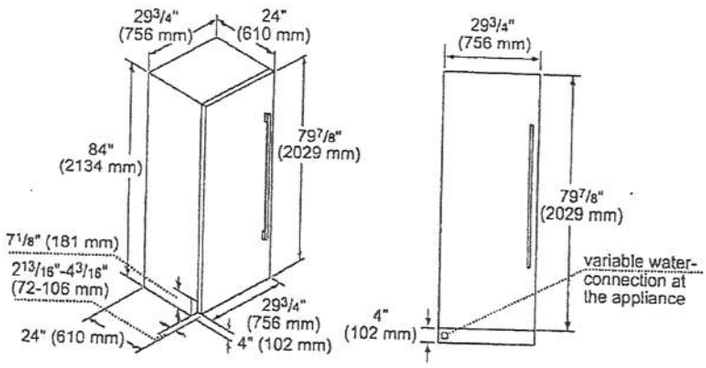

ACCESSORIES (OPTIONAL)

FLAT STAINLESS STEEL DOOR PANELS

30-Inch Flat Stainless Steel Door Panel Without Dispenser

TFL30IR800
For use with Handle

TFL30IR905
Handleless

NOTE: Handleless Panels should not be installed on units without the Soft-Close capability. If you are uncertain if you have a refrigeration unit with Soft-Close capability please contact our customer team by calling 1-800-735-4328.

HANDLES

Choose between two options:

PR36HNDL20
36-Inch Professional Series Handle

or

MS36HNDL20
36-Inch Masterpiece® Series Handle

STORAGE

ICEBUCKETL
Large Ice Bucket

FILTERS

REPLFLTRSS
Freedom® Water Filter
Replacement water filter for use in all freezer and bottom freezer models

FRAMEKIT10

Freedom® Frame Kit
For any custom column installation in 24-inch deep cutouts. With two metal side trims whose placement between the interior cutout wall and the appliance helps overcome the challenge of unfinished cabinet returns.

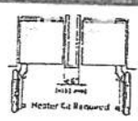

HEATRKIT20 – 13W @ 120V

Freedom® Heater Kit
When two appliances are installed side-by-side a sealing kit must be used. For combinations that involve a freezer column, this sealing kit is included. For all other (non-traditional, i.e. two wine columns, two bottom freezers, etc.) side-by-side combinations or instances where any appliances are installed less than 6-inches (152 mm) apart from one another but not connected side-by-side, purchase this kit. This kit is recommended for use with any installation in areas that are subject to humidity, or located next to an outside wall.

These warranties give you specific legal rights and you may have other rights that vary from state to state. Limited warranty from date of purchase. For complete warranty details, refer to your Use & Care manual, or ask your dealer.

Specifications are for planning purposes only. Refer to installation instructions and consult your countertop supplier prior to making counter opening. Consult with a heating and ventilation engineer for your specific ventilation requirements. For the most detailed information, refer to installation instructions accompanying product or write to Thermador indicating the model number. Specifications are correct at time of printing. Thermador reserves the right to change product specifications or design without notice. Some models are certified for use in Canada. Therm. dor is not responsible for products that are transported from the U.S. for use in Canada.

1 800 735 4328 | USA.THERMADOR.COM | CANADA.THERMADOR.CA | ©2020 BSH HOME APPLIANCES CORPORATION. ALL RIGHTS RESERVED.

PV-83
Feb. 12, 2021

T30IR905SP

30-INCH BUILT-IN FRESH FOOD COLUMN

FREEDOM® COLLECTION, PANEL-READY

Thermador.

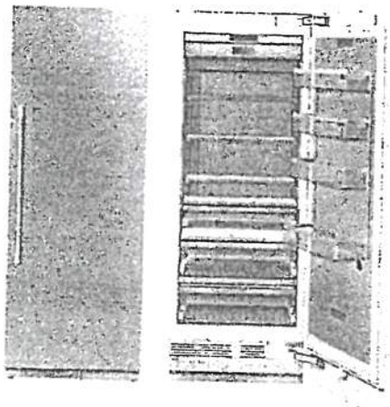

Home Connect

FEATURES & BENEFITS

- Full Stainless Steel Inner Liner
- Freedom® Hinge enables true flush design
- Auto Door Opening provides the opening of the door with just a slight push or pull
- ThermaFresh System, Humidity and Temperature controlled drawers
- SoftClose® Drawers for easy and controlled storage
- Sleek clean design for the perfect symmetry when paired with additional columns
- TFT control panel managing all your columns functions

TEMPERATURE RANGES	
Refrigerator	36°F (2°C) to 46°F (8°C)
Temperature Controlled Drawer	30°F (-1°C) to 38°F (3°C)
SuperCool	36°F (2°C) for approximately 6 hours
Energy Saving (Economy) Mode	43°F (6°C)

GENERAL PROPERTIES	
Home Connect™ (WI-Fi Enabled)	Yes
Panel Ready	Yes
Reversible Door Swing	Yes
SoftClose® Door	Yes*
SoftClose® Drawers	Yes
Carbon Air Filter	Yes
Lighting	LED Sidewall and Theater Lighting
Refrigerator Shelves	4
Adjustable Shelves	3
Shelf Material	Glass w/Aluminum Profile
Full Extension Drawers @ 115° Door Opening Angle	Yes
Full Extension Drawers @ 90° Door Opening Angle	Yes
General Use Drawer	1
Humidity Managed Drawer	1
Temperature Controlled Drawer	1
Door Bins	3
Gallon Door Bins	1
Door Open Alarm	Yes
Open Door Assist	Yes
Special Modes	Sabbath, Economy, Vacation
CAPACITY	
Total Capacity (cu. ft.)	16.8 cu. ft.
PERFORMANCE	
Dedicated Evaporator & Compressor System	Yes
Freeflow® Cold Air System	Yes
SuperCool	Yes
TECHNICAL DETAILS	
Watts (W)	350 W
Current (A)	15 A
Volts (V)	110-120 V
Frequency (Hz)	60 Hz
Power Cord Length (in.)	118
Plug Type	120V-3 Prong
DIMENSIONS & WEIGHT	
Appliance Dimensions (H x W x D) (in.)	83 3/4"** x 29 3/4" x 24"
Required Cutout Size (H x W x D) (in.)	84" x 30" x 25"
Net / Gross Weight (lbs)	366 / 403 lbs
EFFICIENCY	
ENERGY STAR® Qualified	Yes
Annual Energy Consumption	279 kWh

*To verify if you have a refrigeration unit with Soft-Close capability please contact our customer team by calling 1-800-735-4328.
**Height adjustable +1 -1/2" (+1 -13 mm)

PV-83 KP SP
Feb. 12, 2021

T30IR905SP

30-INCH BUILT-IN FRESH FOOD COLUMN

FREEDOM® COLLECTION, PANEL-READY

Thermador

WARRANTY	
Limited, Entire Appliance, Parts and Labor on Any Part of the Refrigerator that Fails Because of a Manufacturing Defect	2 Year
Limited Warranty for Sealed Refrigeration System*; Parts and Labor	3rd to 6th Year
Limited Warranty for Sealed Refrigeration System*; Parts Only	7th to 12th Year
Limited Warranty for Stainless Steel Rust-Through	Lifetime

*Sealed refrigeration system includes compressor, evaporator, condenser, dryer / strainer and connection tubing

CUTOUT DIMENSIONS

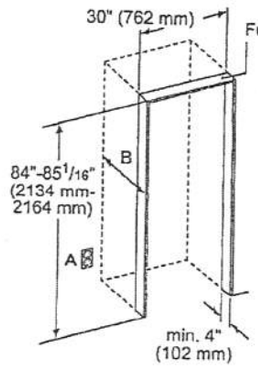

A: Area for installation of power connection.

B: Recess depth depends on kitchen design.

TOP VIEW CLEARANCE

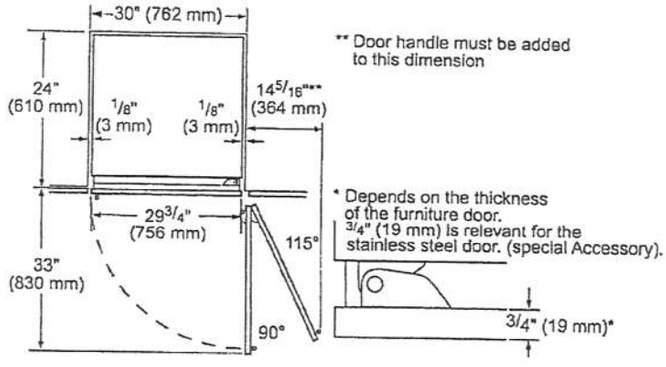

PV-83
Feb. 12, 2021

T30IR905SP

30-INCH BUILT-IN FRESH FOOD COLUMN

FREEDOM® COLLECTION, PANEL-READY

Thermador.

PRODUCT AND PANEL DIMENSIONS

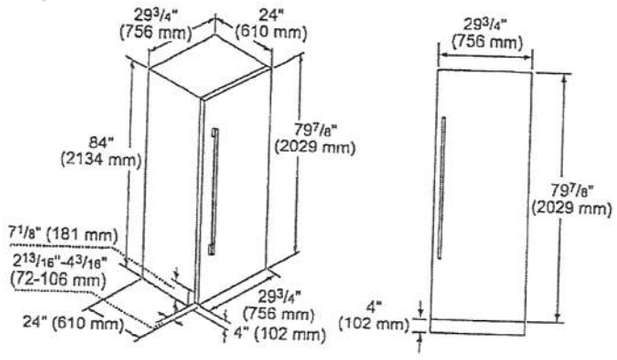

ACCESSORIES (OPTIONAL)

FLAT STAINLESS STEEL DOOR PANELS

30-Inch Flat Stainless Steel Door Panel

TFL30IR800
For use with Handle

TFL30IR905
Handleless

NOTE: Handleless Panels should not be installed on units without the Soft-Close capability. If you are uncertain if you have a refrigeration unit with Soft-Close capability please contact our customer team by calling 1-800-735-4328.

HANDLES

Choose between two options:

PR36HNDL20
36-Inch Professional Series Handle

or

MS36HNDL20
36-Inch Masterpiece® Series Handle

STORAGE

SPRODBIN10
Small Produce Bin

LPRODBIN10
Large Produce Bin

30PRODRAIL
30-Inch Produce Railing

30HFGALBIN
30-Inch Half Gallon Bin

FRAMEKIT10

Freedom® Frame Kit
For any custom column installation in 24-inch deep cutouts. With two metal side trims whose placement between the interior cutout wall and the appliance helps overcome the challenge of unfinished cabinet returns.

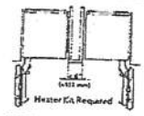

HEATRKIT20 – 13W @ 120V

Freedom® Heater Kit
When two appliances are installed side-by-side a sealing kit must be used. For combinations that involve a freezer column, this sealing kit is included. For all other (non-traditional, i.e. two wine columns, two bottom freezers, etc.) side-by-side combinations or instances where any appliances are installed less than 6-inches (152 mm) apart from one another but not connected side-by-side, purchase this kit. This kit is recommended for use with any installation in areas that are subject to humidity, or located next to an outside wall.

These warranties give you specific legal rights and you may have other rights that vary from state to state. Limited warranty from date of purchase. For complete warranty details, refer to your Use & Care manual, or ask your dealer.

Specifications are for planning purposes only. Refer to installation instructions and consult your countertop supplier prior to making counter opening. Consult with a heating and ventilation engineer for your specific ventilation requirements. For the most detailed information, refer to installation instructions accompanying product or write to Thermador indicating the model number. Specifications are correct at time of printing. Thermador reserves the right to change product specifications & design without notice. Some models are certified for use in Canada. Thermador is not responsible for products that are transported from the U.S. for use in Canada.

1 800 735 4328 | USA.THERMADOR.COM | CANADA.THERMADOR.CA | ©2020 BSH HOME APPLIANCES CORPORATION. ALL RIGHTS RESERVED.

PV-83
Feb. 12, 2021

DWHD650WPR

EMERALD® 6-PROGRAM DISHWASHER

CUSTOM PANEL

Thermador

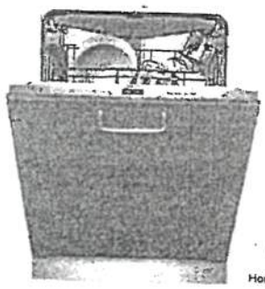

HomeConnect

Also Available In:

DWHD650WFP – Flat Stainless Steel Panel with Professional Series Handle

DWHD650WFM – Flat Stainless Steel Panel with Masterpiece® Series Handle

FEATURES & BENEFITS

- Chef's Tool Drawer (3rd Rack) is designed to make loading and unloading tools and hard to place items extraordinarily easier
- Sens-A-Wash® measures water cleanliness and adjusts wash cycle
- Three stage advanced filtration recirculates water for sparkling results
- 3-Level adjustable upper rack is customizable for all of your needs, designed to be raised for extra large items placed on the bottom rack, or lowered to fit taller wine glasses on the upper rack
- Extra Dry Option adds extra heat to the final rinse to enhance drying results
- Impressively Quiet®— 48 dBA for peaceful kitchen experience
- Thermador Connected Experience by Home Connect brings exclusive dish features that keep you connected. Always.

ACCESSORIES (OPTIONAL)

Dishwasher Supply and Drainage Hose Extension 76 3/4"	SGZ1010UC
Dishwasher Accessory Kit	SMZ5000
Fine Silverware Carafe	SMZ5002UC
Junction Box	SMZPCJB1UC

Accessory Kit Includes Extra-Tall-Item Sprinkler, Vase / Bottle Holder, 3 Plastic Item Clips and Small Item Basket

Fine Silverware Carafe

GENERAL PROPERTIES

Number Of Wash Cycles	6
Number Of Options	5
dBA	48
Third Rack	Chef's Tool Drawer®
Rack Adjustability	Rackmatic 3-Stage
Tub Material	Stainless Steel
Control Type	Touch Control
Concealed Water Heating Element	Yes
Leak Protection System	24/7 AquaStop®
Water Softener	No
Five-Level Wash	Yes
Childlock	No
Home Connect (Wi-Fi Enabled)	Yes

EFFICIENCY

Water Usage Per Cycle (g)	3.5 g
Energy Efficiency Class	Tier 1
ENERGY STAR® Certified	Yes
Total Annual Energy Consumption (kWh)	269 kWh
Total Annual Water Consumption (g)	624 g

CAPACITY

Number Of Place Settings	16

TECHNICAL DETAILS

Watts (W)	1,440 W
Current (A)	12 A
Volts (V)	120 V
Frequency (Hz)	60 Hz
Power Cord Length (in)	67"
Power Cord Install Length from Corner of Unit when Facing the Door (in)*	Left - 45" Right - 56"
Minimum Water Pressure (lb/sin)	14
Max. Temperature for Water Intake	140° F
Length Inlet Hose (in)	N/A
Length Outlet Hose (in)	79"

DIMENSIONS & WEIGHT

Overall Appliance Dimensions (HxWxD) (in)	33 7/8" x 23 9/16" x 23 1/16"
Required Cutout Size (HxWxD) (in)	33 7/8" Min. x 23 5/8" Min. x 24"
Adjustable Feet	Yes
Net Weight (lbs)	88 lbs

*September 2020 running production change to remove adhesive routing clips for power cord. These clips and the edge protector are now included in the dishwasher accessory kit #SMZEPCC1UC.

PV-83
Feb. 12, 2021

DWHD650WPR

EMERALD® 6-PROGRAM DISHWASHER

CUSTOM PANEL

Thermador

WARRANTY	
Limited Warranty, Entire Appliance, Parts and Labor	2 Year
Limited Warranty for Microprocessor or Printed Circuit Board; Parts Only	3rd to 5th Year
Limited Warranty for Racks (Does Not Include Rack Components); Parts Only	3rd to 5th Year
Limited Warranty for Rust-through On Inner Tub Liner; Parts Only	Lifetime

DISHWASHER & CUTOUT DIMENSIONS

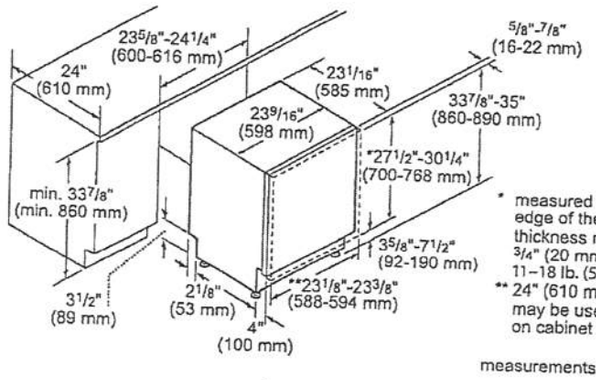

* measured from the bottom edge of the countertop panel thickness recommended 3/4" (20 mm) panel weight 11–18 lb. (5–8 kg)
** 24" (610 mm) wide panel may be used depending on cabinet design

measurements in inches and mm

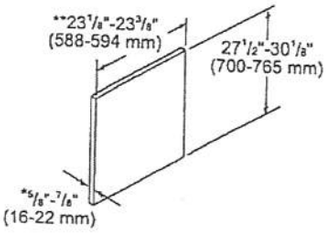

* thickness recommended 3/4" (20 mm), panel weight 11–18 lb. (5–8 kg)
** 24" (610 mm) wide panel may be used depending on cabinet design

measurements in inches and mm

These warranties give you specific legal rights and you may have other rights that vary from state to state. Full warranty and limited warranty from date of installation. For complete warranty details, refer to your Use & Care manual, or ask your dealer.

Specifications are for planning purposes only. Refer to installation instructions and consult your countertop supplier prior to making counter opening. Consult with a heating and ventilation engineer for your specific ventilation requirements. For the most detailed information, refer to installation instructions accompanying product or write to Thermador and stating the model number. Specifications are correct at time of printing. Thermador reserves the right to change product specifications or design without notice. Some models are certified for use in Canada. Thermador is not responsible for products that are transported from the U.S. for use in Canada.

1 800 735 4328 | USA.THERMADOR.COM | CANADA.THERMADOR.CA | ©2020 BSH HOME APPLIANCES CORPORATION. ALL RIGHTS RESERVED

PV-83
Feb. 12, 2021

SHARP

SMD2477ASC

24-INCH MICROWAVE DRAWER* OVEN

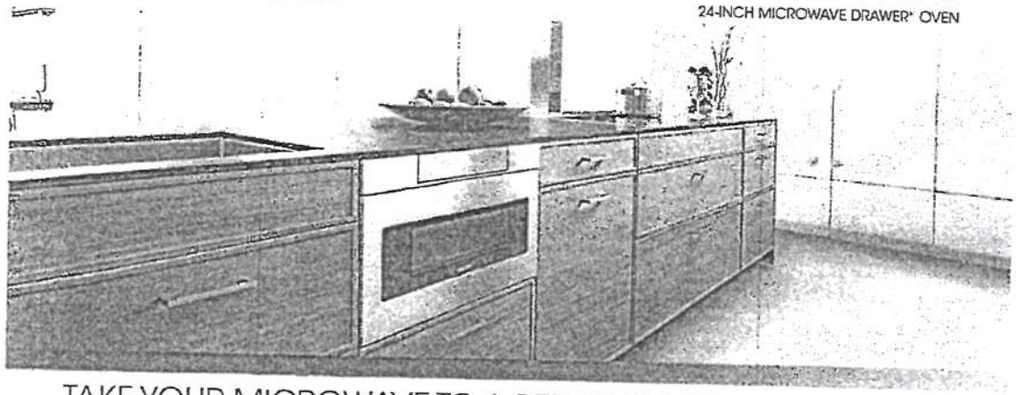

TAKE YOUR MICROWAVE TO A BETTER PLACE

It's your kitchen, your design and your lifestyle. Sharp's Microwave Drawer Oven allows you to focus on the design elements you prefer by removing the microwave from sightlines and enabling more design versatility. The Microwave Drawer offers flexible placement options below an island, peninsula, or standard cabinetry, and can also be installed adjacent to your wall oven. The Microwave Drawer allows you to showcase your design savvy and create a kitchen that flows with your lifestyle.

Sharp introduces the next generation of this successful appliance—model SMD2477ASC - a 24" microwave drawer with a simpler and a sleeker design to match more built-in appliances.

Design Flexibility

Sharp's Microwave Drawer product expands the option for microwave placement in almost any kitchen plan— it's a perfect choice for open-plan kitchens, islands, peninsulas, and a great addition to wet bars, family rooms and home theatres.

Location and Counter Space Saving

You may place the drawer under a counter, cooktop or wall oven or above a warming drawer without a built-in kit, additional trim or venting. Sharp microwave drawer provides the best solution for a cleaner, uncluttered counter space.

SHARP's Exclusive AutoTouch™ System

Sharp's exclusive AutoTouch™ system allows you to open and close the drawer automatically at one-finger operation by pressing a button on the control panel.

New Hidden Control Panel

The new SMD2477ASC model features a hidden control panel which gives a more integrated look and feel within the kitchen. The new tall control panel, angled at 45° degrees, is easy to see, easy to access and easy to use.

Specifications

TECHNICAL SPECIFICATIONS	
Size	24" wide
Microwave Capacity	1.2 cu.ft
Microwave Power	950 watts
Control Panel	Digital LCD Display
Control Type	Hidden Control Panel
Drawer Opening	AutoTouch™ System
Power Level	11
Sensor Cook, Reheat, Popcorn Settings	13
Reheat Auto Settings	2
Defrost Auto Settings	6
Keep Warm Setting	Yes, up to 30 min.
Melt / Soften / Settings	Yes
Beverage Setting	Yes
Programmable Stages	Yes, 4
Digital Clock	Yes
Kitchen Timer	Yes
Child Lock	Yes
+30 sec	Yes
Interior Oven Light	Yes

TECHNICAL SPECIFICATIONS CONTINUED	
Demonstration Mode	Yes
Built-In Ready	Yes
Available Colour	Stainless Steel
Accessory	SKMD24F0AS
DIMENSIONS/WEIGHT(inches/lbs.)	
Cut-out Dimension	22 1/8" x 15 9/16"
Product Dimension	23 7/8" x 23 1/64" x 15 7/8"
Box Dimension	29.8" w x 27.9" x 21.9"
Net Weight	74 lb.
Gross Weight	85.8 lb.
POWER/SAFETY	
Power / Ratings	120V, 60Hz
Ratings	1.67Kw, 14.5Amps
Safety Compliance	FCC, DHHS, cUL
WARRANTY/UPC	
Warranty	1 year parts & labour with in-home service; 4 additional years for magnetron tube only
UPC	074000619944

5-03-2015

PV-83
Feb. 12, 2021

SHARP

SMD2477ASC

Installation Guide

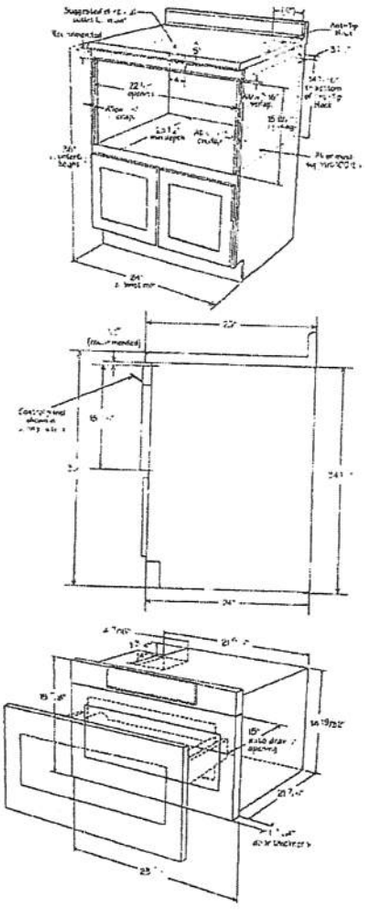

©2016 Sharp Electronics Corporation. All rights reserved.
Product specification and design are subject to change without notice.

SHARP ELECTRONICS OF CANADA LTD.
335 Britannia Road East, MISSISSAUGA, ONTARIO, L4Z 1W9
www.sharp.ca