ALPA-BARRIE

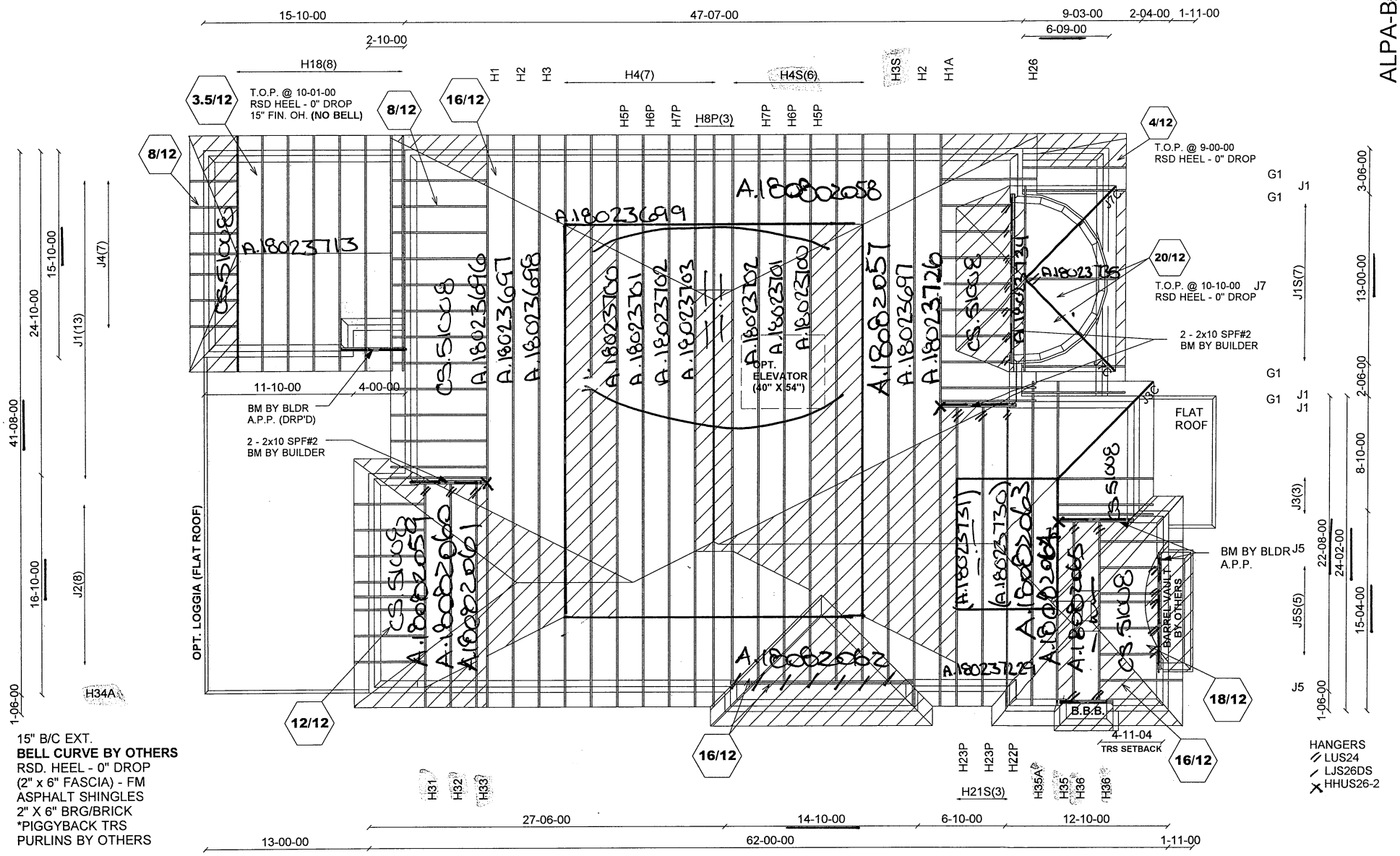

15" B/C EXT.
BELL CURVE BY OTHERS
RSD. HEEL - 0" DROP
(2" x 6" FASCIA) - FM
ASPHALT SHINGLES
2" X 6" BRG/BRICK
*PIGGYBACK TRS
PURLINS BY OTHERS

HANGERS
// LUS24
/ LJS26DS
X HHUS26-2

KNIGHTSWOOD

Mitek V. 8.2.0

ALL CONVENTIONAL FRAMING TO CONFORM WITH PART 9 O.B.C. LATEST EDITION. ROOF RAFTERS THAT CROSS OVER TRUSSES TO BE 2X4 SPF #2 @ 24" O.C WITH A VERT. POST TO THE TRUSS UNDERNEATH AT EACH CROSS POINT. VERT. POSTS LONGER THAN 6' TO HAVE LATERAL BRACING SO THAT THE DISTANCE BETWEEN END POINTS & BETWEEN ROWS OF BRACING DOES NOT EXCEED 6'

CONVENTIONAL FRAMING BY OTHERS

PL. 101745

Job Track: 45147	Builder / Location: GOLD PARK HOMES / VAUGHAN	Model / Elevation: 5005 / B LOT 158 OR OPT 2ND FLR SITTING AREAS, ELEVATOR, LOGGIA, W.O.D, L.O.D. OR UPGRADED SIDE/REAR OR CORNER	
Layout ID: 300970	Project: PINE VALLEY	THESE DRAWINGS CONSTITUTE THE PROPERTY OF ALPA ROOF TRUSSES INC., SHALL NOT BE REPRODUCED, PUBLISHED, OR REDISTRIBUTED IN ANY MANNER OR UTILIZED FOR ANY PURPOSE OTHER THAN THE MANUFACTURE OF TRUSSES BY ALPA ROOF TRUSSES INC AND WILL BE RETRACTED BY ALPA ROOF TRUSSES INC IF UTLILZED FOR ANY OTHER PURPOSE.	
Plan Log: 99421	Date: 8/10/2018 Designer: AMANDA		

Stracon Engineering Inc.

69 Graydon Crescent
Richmond Hill, Ontario
L4B 3W7
(905) 832-2250 Fax (905) 832-0286

REGISTERED PROFESSIONAL ENGINEER
JAN 15 2014
E. FOK
PROVINCE OF ONTARIO

RESPONSIBILITIES

1. Stracon Engineering Inc. is responsible for the design of trusses as individual components.
2. It is the responsibility of others to ascertain that the design loads utilized on this drawing meet or exceed the actual dead load imposed by the structure and the live load imposed by the local building code or the authorities with jurisdictions.
3. All dimensions are to be verified by owner contractor, architect or other authority before manufacture.
4. Stracon Engineering Inc. bears no responsibility for the erection of the trusses. Persons erecting trusses are cautioned to seek professional advice regarding temporary and permanent bracing system. Bracing shown on Stracon Engineering Inc. drawings is specified for the truss as a component only and forms an integral part of the truss design.
5. It is the truss manufacture's responsibility to ensure that trusses are manufactured in conformance with Stracon Engineering Inc. specifications outlined below.

SPECIFICATIONS

1. Trusses designed by Stracon Engineering Inc. conforms to the relevant section of the Ontario Building Code of Canada (Part 9 or Part 4) or to the Canadian code for farm buildings, whichever applies to the building type indicated on the drawings as well as to the procedures established by the truss plate institute of Canada. Unit stresses used are as per CSA-086-09.
2. Lumber is to be the sizes and grade specified.
3. Moisture content of lumber is not to exceed 19% in service unless otherwise specified.
4. Lumber not to be treated with chemicals unless otherwise specified.
5. Plates shall be applied to both faces of the truss at each joint and shall be positioned as specified.
6. The top chord is assumed to be continuously laterally braced by the roof sheathing or purlins at intervals not exceeding 12.5 times in thickness.
7. Where not rigid ceiling is attached directly to the bottom chord, laterally brace the chords at intervals not exceeding 3M (10') o.c.

January 15, 2014

JOB NAME	TRUSS NAME	QUANTITY	PLY	JOB DESC.	DRWG NO.
300970	H3S	1	1	TRUSS DESC.	JT# 45147

Alpa Roof Truss, Maple

Version 8.210 S Jun 13 2018 MiTek Industries, Inc. Wed Aug 15 14:10:47 2018 Page 1
ID:HSVaWlIDnhr?B6oeweH9vbyNdls-JfULUbMdR?yMMvOXzSwIC8y5H4u8U3?hFBnJvOynbLM

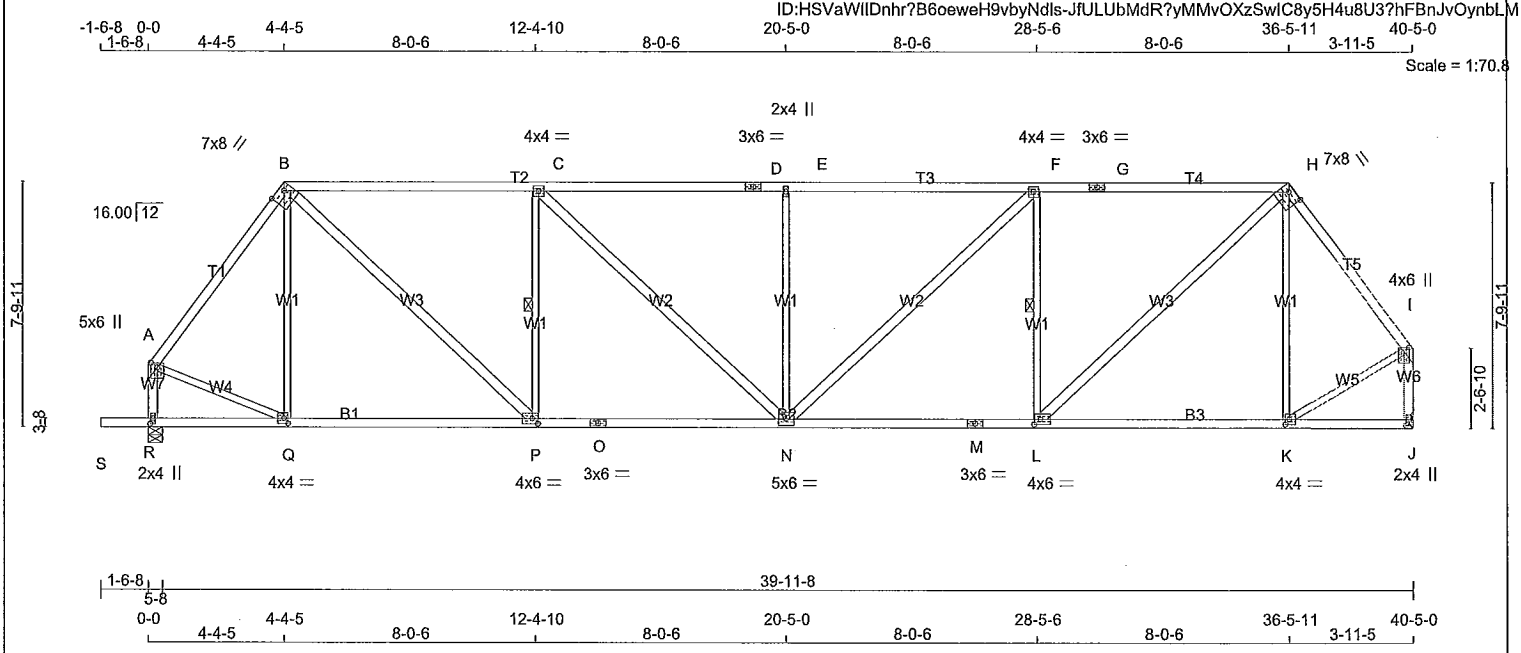

TOTAL WEIGHT = 190 lb
[M]

LUMBER
N. L. G. A. RULES

CHORDS	SIZE		LUMBER	DESCR.
A - B	2x4	DRY	No.2	SPF
B - D	2x4	DRY	1650F 1.5E	SPF
D - G	2x4	DRY	1650F 1.5E	SPF
G - H	2x4	DRY	1650F 1.5E	SPF
H - I	2x4	DRY	No.2	SPF
R - A	2x4	DRY	No.2	SPF
J - I	2x4	DRY	No.2	SPF
S - O	2x4	DRY	No.2	SPF
O - M	2x4	DRY	No.2	SPF
M - J	2x4	DRY	No.2	SPF
ALL WEBS	2x3	DRY	No.2	SPF
EXCEPT				
B - P	2x4	DRY	No.2	SPF
C - N	2x4	DRY	No.2	SPF
N - F	2x4	DRY	No.2	SPF
L - H	2x4	DRY	No.2	SPF

DRY: SEASONED LUMBER.

PLATES (table is in inches)

JT	TYPE	PLATES	W	LEN	Y	X
A	TMVW+p	MT20	5.0	6.0	1.75	2.50
B	TTWW-h	MT20	7.0	8.0	2.00	5.25
C	TMWW-t	MT20	4.0	4.0		
D	TS-t	MT20	3.0	6.0		
E	TMW+w	MT20	2.0	4.0		
F	TMWW-t	MT20	4.0	4.0		
G	TS-t	MT20	3.0	6.0		
H	TTWW-h	MT20	7.0	8.0	1.75	5.00
I	TMVW+p	MT20	4.0	6.0	1.50	2.00
J	BMV1+p	MT20	2.0	4.0	2.25	1.00
K	BMWW-t	MT20	4.0	4.0	2.00	1.50
L	BMWW-t	MT20	4.0	6.0	2.00	2.25
M	BS-t	MT20	3.0	6.0		
N	BMWWW-t	MT20	5.0	6.0		
O	BS-t	MT20	3.0	6.0		
P	BMWW-t	MT20	4.0	6.0	2.00	2.25
Q	BMWW-t	MT20	4.0	4.0	2.00	1.50
R	BMV1+p	MT20	2.0	4.0	2.25	1.00

NOTE: Lateral brace(s) shown shall be 1x4 for Part 9 design as per OBC 9.23.13.11, and no less than 2x4 for Part 4 design.

LICENSED PROFESSIONAL ENGINEER
D. O'CONNOR
100009580
08/15/2018
PROVINCE OF ONTARIO

DIMENSIONS, SUPPORTS AND LOADINGS SPECIFIED BY FABRICATOR TO BE VERIFIED BY BUILDING DESIGNER

BEARINGS

JT	FACTORED GROSS REACTION VERT	HORZ	MAXIMUM GROSS REACTION DOWN	HORZ	FACTORED UPLIFT	INPUT BRG IN-SX	REQRD BRG IN-SX
R	2098	0	2098	0	0	5-8	3-2
J	1949	0	1949	0	0	MECHANICAL	

A SUITABLE HANGER/MECHANICAL CONNECTION IS REQUIRED AT JOINT J. MINIMUM BEARING LENGTH AT JOINT J = 2-13.

UNFACTORED REACTIONS

JT	1ST LCASE COMBINED	MAX./MIN. COMPONENT REACTIONS SNOW	LIVE	PERM.LIVE	WIND	DEAD	SOIL
R	1496	913 / 0	0 / 0	0 / 0	0 / 0	583 / 0	0 / 0
J	1390	848 / 0	0 / 0	0 / 0	0 / 0	542 / 0	0 / 0

BEARING MATERIAL TO BE SPF NO.2 OR BETTER AT JOINT(S) R

BRACING
TOP CHORD TO BE SHEATHED OR MAX. PURLIN SPACING = 3.80 FT.
MAX. UNBRACED BOTTOM CHORD LENGTH = 10.00 FT OR RIGID CEILING DIRECTLY APPLIED.

ALL PITCH BREAKS AND PERIMETER CORNER JOINTS MUST BE LATERALLY RESTRAINED.

1 LATERAL BRACE(S) AT 1/ 2 LENGTH OF C-P, F-L.

END VERTICAL(S) MUST BE SHEATHED OR HAVE BRACES AS INDICATED IN THE MAX. UNBRACED LENGTH COLUMN OF THE TABLE BELOW

LOADING
TOTAL LOAD CASES: (4)

CHORDS

MEMB. FR-TO	MAX. FACTORED FORCE (LBS)	FACTORED VERT. LOAD LC1 (PLF) FROM	TO	MAX CSI (LC)	MAX. UNBRAC LENGTH
A- B	-1726 / 0	-78.0	-78.0	0.38 (1)	4.74
B- C	-2311 / 0	-78.0	-78.0	0.86 (1)	4.06
C- D	-2679 / 0	-78.0	-78.0	0.92 (1)	3.80
D- E	-2679 / 0	-78.0	-78.0	0.92 (1)	3.80
E- F	-2679 / 0	-78.0	-78.0	0.90 (1)	3.83
F- G	-2268 / 0	-78.0	-78.0	0.83 (1)	4.14
G- H	-2268 / 0	-78.0	-78.0	0.83 (1)	4.14
H- I	-1585 / 0	-78.0	-78.0	0.29 (1)	4.97
R- A	-1925 / 0	0.0	0.0	0.22 (1)	6.06
J- I	-1931 / 0	0.0	0.0	0.26 (1)	6.06
S- R	0 / 0	-96.5	-96.5	0.16 (1)	10.00
R- Q	0 / 0	-18.5	-18.5	0.18 (4)	10.00
Q- P	0 / 1027	-18.5	-18.5	0.34 (4)	10.00
P- O	0 / 2312	-18.5	-18.5	0.51 (1)	10.00
O- N	0 / 2312	-18.5	-18.5	0.51 (1)	10.00
N- M	0 / 2267	-18.5	-18.5	0.50 (1)	10.00
M- L	0 / 2267	-18.5	-18.5	0.50 (1)	10.00
L- K	0 / 940	-18.5	-18.5	0.33 (4)	10.00
K- J	0 / 0	-18.5	-18.5	0.17 (4)	10.00

WEBS

MEMB. FR-TO	MAX. FACTORED FORCE (LBS)	MAX CSI (LC)
Q- B	-242 / 0	0.28 (1)
B- P	0 / 1755	0.28 (1)
P- C	-1043 / 0	0.40 (1)
C- N	0 / 503	0.08 (1)
N- E	-584 / 0	0.66 (1)
N- F	0 / 564	0.09 (1)
L- F	-1083 / 0	0.42 (1)
L- H	0 / 1813	0.29 (1)
K- H	-378 / 0	0.43 (1)
A- Q	0 / 1095	0.25 (1)
K- I	0 / 1072	0.24 (1)

DESIGN CRITERIA

SPECIFIED LOADS:

TOP CH.	LL	=	21.0	PSF
	DL	=	6.0	PSF
BOT CH.	LL	=	0.0	PSF
	DL	=	7.4	PSF
TOTAL LOAD		=	34.4	PSF

SPACING = 24.0 IN. C/C

LOADING IN FLAT SECTION BASED ON A SLOPE OF 2.00/12 MINIMUM

THIS TRUSS IS DESIGNED FOR RESIDENTIAL OR SMALL BUILDING REQUIREMENTS OF PART 9, NBCC 2010, NBCC 2015

THIS DESIGN COMPLIES WITH:
- PART 9 OF OBC 2012, OBC 2018
- CSA 086-09, CSA 086-14
- TPIC 2011, TPIC 2014

(55 % OF 23.0 P.S.F. G.S.L. PLUS 8.4 P.S.F. RAIN LOAD) EQUALS 21.0 P.S.F. SPECIFIED ROOF LIVE LOAD

ALLOWABLE DEFL.(LL)= L/360 (1.35")
CALCULATED VERT. DEFL.(LL) = L/ 999 (0.13")
ALLOWABLE DEFL.(TL)= L/360 (1.35")
CALCULATED VERT. DEFL.(TL) = L/ 999 (0.28")

CANTILEVER DEFLECTION:
ALLOWABLE DEFL.(LL)= L/120 (0.19")
CALCULATED VERT. DEFL.(LL) = L/ 999 (0.01")
ALLOWABLE DEFL.(TL)= L/120 (0.19")
CALCULATED VERT. DEFL.(TL) = L/ 999 (0.01")

CSI: TC=0.92/1.00 (C-E:1) , BC=0.51/1.00 (N-P:1) , WB=0.66/1.00 (E-N:1) , SSI=0.30/1.00 (B-C:1)

DOL LUMBER=1.00 NAIL=1.00 LS BEND=1.10 COMP=1.10 SHEAR=1.10 TENS= 1.10

COMPANION LIVE LOAD FACTOR = 1.00

TRUSS PLATE MANUFACTURER IS NOT RESPONSIBLE FOR QUALITY CONTROL IN THE TRUSS MANUFACTURING PLANT .

NAIL VALUES

PLATE	GRIP(DRY) (PSI) MAX	MIN	SHEAR (PLI) MAX	MIN	SECTION (PLI) MAX	MIN
MT20	618	354	1667	788	1987	1656

PLATE PLACEMENT TOL. = 0.250 inches

PLATE ROTATION TOL. = 5.0 Deg.

JSI GRIP= 0.90 (L) (INPUT = 0.90)
JSI METAL= 0.70 (O) (INPUT = 1.00)

A18082057

CONTINUED ON PAGE 2

JOB NAME	TRUSS NAME	QUANTITY	PLY	JOB DESC.	DRWG NO.
300970	H4S	6	1	TRUSS DESC.	JT# 45147

Alpa Roof Truss, Maple

Version 8.210 S Jun 13 2018 MiTek Industries, Inc. Wed Aug 15 14:10:50 2018 Page 1

ID:HSVaWlIDnhr?B6oeweH9vbyNdls-jEAU6dOWkwLxDN76eaT?pnafmHvYhRh7x90zWjynbLJ

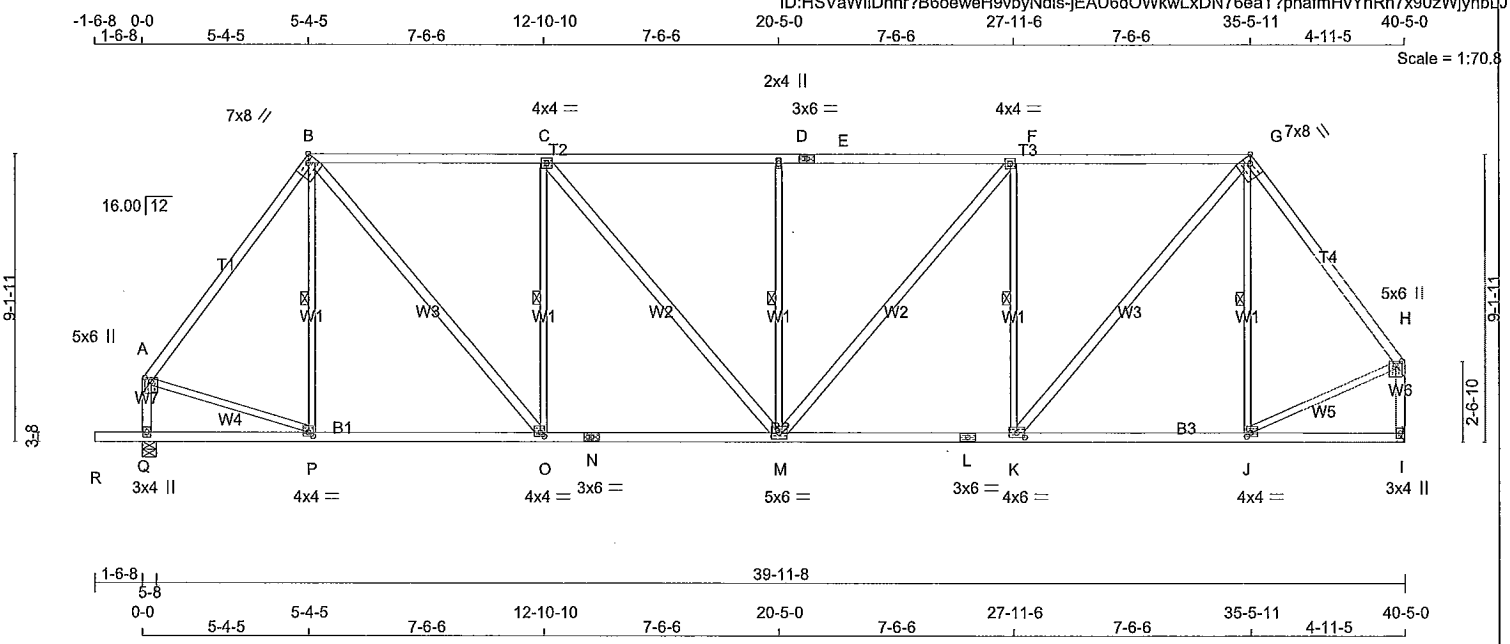

TOTAL WEIGHT = 6 X 202 = 1209 lb

[M][F]

LUMBER

N. L. G. A. RULES

CHORDS	SIZE		LUMBER	DESCR.
A - B	2x4	DRY	No.2	SPF
B - E	2x4	DRY	No.2	SPF
E - G	2x4	DRY	No.2	SPF
G - H	2x4	DRY	No.2	SPF
Q - A	2x4	DRY	No.2	SPF
I - H	2x4	DRY	No.2	SPF
R - N	2x4	DRY	No.2	SPF
N - L	2x4	DRY	No.2	SPF
L - I	2x4	DRY	No.2	SPF
ALL WEBS	2x3	DRY	No.2	SPF
EXCEPT				
B - O	2x4	DRY	No.2	SPF
C - M	2x4	DRY	No.2	SPF
M - F	2x4	DRY	No.2	SPF
K - G	2x4	DRY	No.2	SPF

DRY: SEASONED LUMBER.

PLATES (table is in inches)

JT	TYPE	PLATES	W	LEN	Y	X
A	TMVW+p	MT20	5.0	6.0	1.50	2.50
B	TTWW-h	MT20	7.0	8.0	Edge	2.75
C	TMWW-t	MT20	4.0	4.0		
D	TMW+w	MT20	2.0	4.0		
E	TS-t	MT20	3.0	6.0		
F	TMWW-t	MT20	4.0	4.0		
G	TTWW-h	MT20	7.0	8.0	Edge	2.75
H	TMVW+p	MT20	5.0	6.0	1.50	2.50
I	BMV1+p	MT20	3.0	4.0		
J	BMWW-t	MT20	4.0	4.0	1.50	1.50
K	BMWW-t	MT20	4.0	6.0	1.75	3.00
L	BS-t	MT20	3.0	6.0		
M	BMWWW-t	MT20	5.0	6.0		
N	BS-t	MT20	3.0	6.0		
O	BMWW-t	MT20	4.0	4.0	1.50	1.50
P	BMWW-t	MT20	4.0	4.0	1.50	1.75
Q	BMV1+p	MT20	3.0	4.0		

Edge - INDICATES REFERENCE CORNER OF PLATE TOUCHES EDGE OF CHORD.

NOTE: Lateral brace(s) shown shall be 1x4 for Part 9 design as per OBC 9.23.13.11, and no less than 2x4 for Part 4 design.

LICENSED PROFESSIONAL ENGINEER
D. O'CONNOR
100009580
08/15/2018
PROVINCE OF ONTARIO

DIMENSIONS, SUPPORTS AND LOADINGS SPECIFIED BY FABRICATOR TO BE VERIFIED BY BUILDING DESIGNER

BEARINGS

JT	FACTORED GROSS REACTION VERT	HORZ	MAXIMUM FACTORED GROSS REACTION DOWN	HORZ	UPLIFT	INPUT BRG IN-SX	REQRD BRG IN-SX
Q	2210	0	2210	0	0	5-8	3-8
I	2064	0	2064	0	0	MECHANICAL	

A SUITABLE HANGER/MECHANICAL CONNECTION IS REQUIRED AT JOINT I. MINIMUM BEARING LENGTH AT JOINT I = 3-3.

UNFACTORED REACTIONS

JT	1ST LCASE COMBINED	MAX./MIN. COMPONENT REACTIONS SNOW	LIVE	PERM.LIVE	WIND	DEAD	SOIL
Q	1585	913 / 0	0 / 0	0 / 0	0 / 0	672 / 0	0 / 0
I	1481	848 / 0	0 / 0	0 / 0	0 / 0	633 / 0	0 / 0

BEARING MATERIAL TO BE SPF NO.2 OR BETTER AT JOINT(S) Q

BRACING

FOR SECTION B-G, MAX. PURLIN SPACING = 2.00 FT.
FOR OTHER SECTIONS, TOP CHORD TO BE SHEATHED OR MAX. PURLIN SPACING = 4.59 FT.
MAX. UNBRACED BOTTOM CHORD LENGTH = 10.00 FT OR RIGID CEILING DIRECTLY APPLIED.

ALL PITCH BREAKS AND PERIMETER CORNER JOINTS MUST BE LATERALLY RESTRAINED.

1 LATERAL BRACE(S) AT 1/ 2 LENGTH OF B-P, C-O, D-M, F-K, G-J.

END VERTICAL(S) MUST BE SHEATHED OR HAVE BRACES AS INDICATED IN THE MAX. UNBRACED LENGTH COLUMN OF THE TABLE BELOW

LOADING

TOTAL LOAD CASES: (4)

CHORDS

MEMB. FR-TO	MAX. FACTORED FORCE (LBS)	FACTORED VERT. LOAD LC1 (PLF) FROM	TO	MAX CSI (LC)	MAX. UNBRAC LENGTH
A- B	-1857 / 0	-78.0	-78.0	0.44 (1)	4.59
B- C	-2140 / 0	-85.5	-85.5	0.71 (1)	2.00
C- D	-2434 / 0	-85.5	-85.5	0.71 (1)	2.00
D- E	-2434 / 0	-85.5	-85.5	0.71 (1)	2.00
E- F	-2434 / 0	-85.5	-85.5	0.71 (1)	2.00
F- G	-2104 / 0	-85.5	-85.5	0.71 (1)	2.00
G- H	-1738 / 0	-78.0	-78.0	0.35 (1)	4.78
Q- A	-2024 / 0	0.0	0.0	0.23 (1)	5.94
I- H	-2031 / 0	0.0	0.0	0.28 (1)	5.93
R- Q	0 / 0	-96.5	-96.5	0.16 (1)	10.00
Q- P	0 / 0	-18.5	-18.5	0.18 (4)	10.00
P- O	0 / 1107	-18.5	-18.5	0.32 (4)	10.00
O- N	0 / 2140	-18.5	-18.5	0.46 (1)	10.00
N- M	0 / 2140	-18.5	-18.5	0.46 (1)	10.00
M- L	0 / 2104	-18.5	-18.5	0.46 (1)	10.00
L- K	0 / 2104	-18.5	-18.5	0.46 (1)	10.00
K- J	0 / 1034	-18.5	-18.5	0.32 (4)	10.00
J- I	0 / 0	-18.5	-18.5	0.17 (4)	10.00

WEBS

MEMB. FR-TO	MAX. FACTORED FORCE (LBS)	MAX CSI (LC)
P- B	-195 / 4	0.11 (1)
B- O	0 / 1589	0.26 (1)
O- C	-1066 / 0	0.58 (1)
C- M	0 / 454	0.07 (1)
M- D	-597 / 0	0.33 (1)
M- F	0 / 510	0.08 (1)
K- F	-1109 / 0	0.60 (1)
K- G	0 / 1646	0.26 (1)
J- G	-317 / 0	0.17 (1)
A- P	0 / 1156	0.26 (1)
J- H	0 / 1129	0.25 (1)

DESIGN CRITERIA

SPECIFIED LOADS:

TOP CH.	LL	=	21.0	PSF
	DL	=	6.0	PSF
BOT CH.	LL	=	0.0	PSF
	DL	=	7.4	PSF
TOTAL LOAD		=	34.4	PSF

SPACING = 24.0 IN. C/C

LOADING IN FLAT SECTION BASED ON PIGGYBACK TRUSS WITH SLOPES OF 16.00/12 AND -16.00/12 AND RESPECTIVE WALL HEIGHTS OF 0-0 AND 0-0 AND AN ADDITIONAL DEAD LOAD OF 3.0 P.S.F.

THIS TRUSS IS DESIGNED FOR RESIDENTIAL OR SMALL BUILDING REQUIREMENTS OF PART 9, NBCC 2010, NBCC 2015

THIS DESIGN COMPLIES WITH:
- PART 9 OF OBC 2012, OBC 2018
- CSA 086-09, CSA 086-14
- TPIC 2011, TPIC 2014

(55 % OF 23.0 P.S.F. G.S.L. PLUS 8.4 P.S.F. RAIN LOAD) EQUALS 21.0 P.S.F. SPECIFIED ROOF LIVE LOAD

ALLOWABLE DEFL.(LL)= L/360 (1.35")
CALCULATED VERT. DEFL.(LL) = L/ 999 (0.11")
ALLOWABLE DEFL.(TL)= L/360 (1.35")
CALCULATED VERT. DEFL.(TL) = L/ 999 (0.25")

CANTILEVER DEFLECTION:
ALLOWABLE DEFL.(LL)= L/120 (0.19")
CALCULATED VERT. DEFL.(LL) = L/ 999 (0.01")
ALLOWABLE DEFL.(TL)= L/120 (0.19")
CALCULATED VERT. DEFL.(TL) = L/ 999 (0.01")

CSI: TC=0.71/1.00 (C-D:1) , BC=0.46/1.00 (M-O:1) , WB=0.60/1.00 (F-K:1) , SSI=0.30/1.00 (B-C:1)

DOL LUMBER=1.00 NAIL=1.00 LS BEND=1.10 COMP=1.10 SHEAR=1.10 TENS= 1.10

COMPANION LIVE LOAD FACTOR = 1.00

AUTOSOLVE HEELS OFF

TRUSS PLATE MANUFACTURER IS NOT RESPONSIBLE FOR QUALITY CONTROL IN THE TRUSS MANUFACTURING PLANT .

NAIL VALUES

PLATE	GRIP(DRY) (PSI) MAX	MIN	SHEAR (PLI) MAX	MIN	SECTION (PLI) MAX	MIN
MT20	618	354	1667	788	1987	1656

PLATE PLACEMENT TOL. = 0.250 inches

PLATE ROTATION TOL. = 5.0 Deg.

JSI GRIP= 0.89 (O) (INPUT = 0.90)
JSI METAL= 0.62 (A) (INPUT = 1.00)

A18082058

CONTINUED ON PAGE 2

JOB NAME	TRUSS NAME	QUANTITY	PLY	JOB DESC.	DRWG NO.
300970	H31	1	1	TRUSS DESC.	JT# 45147

Alpa Roof Truss, Maple

Version 8.210 S Jun 13 2018 MiTek Industries, Inc. Wed Aug 15 14:10:51 2018 Page 1
ID:HSVaWIIDnhr?B6oeweH9vbyNdls-BQksJzP8VETorXiJCI?EM_6rbhJQQyxGAplX29ynbLI

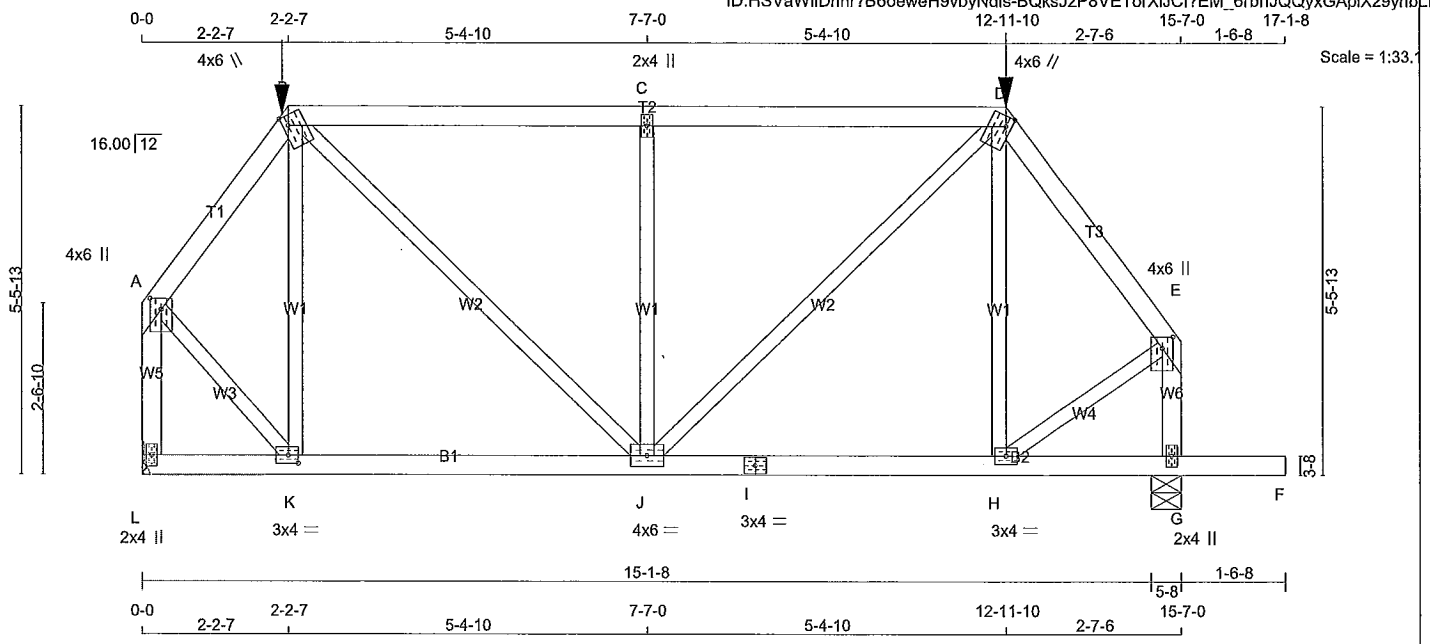

TOTAL WEIGHT = 74 lb

[M]

LUMBER
N. L. G. A. RULES

CHORDS	SIZE		LUMBER	DESCR.
A - B	2x4	DRY	No.2	SPF
B - D	2x4	DRY	No.2	SPF
D - E	2x4	DRY	No.2	SPF
L - A	2x4	DRY	No.2	SPF
G - E	2x4	DRY	No.2	SPF
L - I	2x4	DRY	No.2	SPF
I - F	2x4	DRY	No.2	SPF
ALL WEBS EXCEPT	2x3	DRY	No.2	SPF

DRY: SEASONED LUMBER.

PLATES (table is in inches)

JT	TYPE	PLATES	W	LEN	Y	X
A	TMVW+p	MT20	4.0	6.0	2.00	2.00
B	TTWW+m	MT20	4.0	6.0	1.75	1.00
C	TMW+w	MT20	2.0	4.0		
D	TTWW+m	MT20	4.0	6.0	1.75	1.00
E	TMVW+p	MT20	4.0	6.0	2.00	2.00
G	BMV1+p	MT20	2.0	4.0		
H	BMWW-t	MT20	3.0	4.0		
I	BS-t	MT20	3.0	4.0		
J	BMWWW-t	MT20	4.0	6.0		
K	BMWW-t	MT20	3.0	4.0	1.50	1.75
L	BMV1+p	MT20	2.0	4.0		

HANGERS NOTES

1) SPECIAL HANGER(S) OR CONNECTION(S) REQUIRED TO SUPPORT CONCENTRATED LOAD(S) 80.7 lbs FACTORED DOWN AT 12-11-10, AND 68.0 lbs FACTORED DOWN AT 2-2-7 ON TOP CHORD. DESIGN FOR UNSPECIFIED CONNECTION(S) IS DELEGATED TO THE BUILDING DESIGNER.

NOTE: Lateral brace(s) shown shall be 1x4 for Part 9 design as per OBC 9.23.13.11, and no less than 2x4 for Part 4 design.

LICENSED PROFESSIONAL ENGINEER
D. O'CONNOR
100009580
08/15/2018
PROVINCE OF ONTARIO

DIMENSIONS, SUPPORTS AND LOADINGS SPECIFIED BY FABRICATOR TO BE VERIFIED BY BUILDING DESIGNER

BEARINGS

JT	FACTORED GROSS REACTION VERT	HORZ	MAXIMUM FACTORED GROSS REACTION DOWN	HORZ	UPLIFT	INPUT BRG IN-SX	REQRD BRG IN-SX
L	1093	0	1093	0	0	MECHANICAL	
G	1236	0	1236	0	0	5-8	1-13

A SUITABLE HANGER/MECHANICAL CONNECTION IS REQUIRED AT JOINT L. MINIMUM BEARING LENGTH AT JOINT L = 1-8.

UNFACTORED REACTIONS

JT	1ST LCASE COMBINED	MAX./MIN. COMPONENT REACTIONS SNOW	LIVE	PERM.LIVE	WIND	DEAD	SOIL
L	780	475 / 0	0 / 0	0 / 0	0 / 0	305 / 0	0 / 0
G	882	536 / 0	0 / 0	0 / 0	0 / 0	345 / 0	0 / 0

BEARING MATERIAL TO BE SPF NO.2 OR BETTER AT JOINT(S) G

BRACING

TOP CHORD TO BE SHEATHED OR MAX. PURLIN SPACING = 5.26 FT.
MAX. UNBRACED BOTTOM CHORD LENGTH = 10.00 FT OR RIGID CEILING DIRECTLY APPLIED.

ALL PITCH BREAKS AND PERIMETER CORNER JOINTS MUST BE LATERALLY RESTRAINED.

LOADING

TOTAL LOAD CASES: (4)

CHORDS

MEMB. FR-TO	MAX. FACTORED FORCE (LBS)	FACTORED VERT. LOAD (PLF) FROM	TO	LC1	MAX CSI (LC)	MAX. UNBRAC LENGTH
A- B	-733 / 0	-78.0	-78.0	0.08 (1)	6.25	
B- C	-929 / 0	-114.5	-114.5	0.65 (1)	5.26	
C- D	-929 / 0	-114.5	-114.5	0.65 (1)	5.26	
D- E	-837 / 0	-78.0	-78.0	0.11 (1)	6.25	
L- A	-1084 / 0	0.0	0.0	0.16 (1)	7.55	
G- E	-1069 / 0	0.0	0.0	0.13 (1)	7.60	
L- K	0 / 0	-27.2	-27.2	0.12 (4)	10.00	
K- J	0 / 430	-27.2	-27.2	0.22 (4)	10.00	
J- I	0 / 495	-27.2	-27.2	0.23 (4)	10.00	
I- H	0 / 495	-27.2	-27.2	0.23 (4)	10.00	
H- G	0 / 0	-27.2	-27.2	0.12 (4)	10.00	
G- F	0 / 0	-96.5	-96.5	0.17 (1)	10.00	

WEBS

MEMB. FR-TO	MAX. FACTORED FORCE (LBS)	MAX CSI (LC)
K- B	-284 / 0	0.13 (1)
B- J	0 / 692	0.17 (1)
J- C	-748 / 0	0.35 (1)
J- D	0 / 602	0.15 (1)
H- D	-168 / 21	0.08 (1)
A- K	0 / 597	0.15 (1)
H- E	0 / 578	0.14 (1)

FACTORED CONCENTRATED LOADS (LBS)

JT	LOC.	LC1	MAX-	MAX+	FACE	DIR.	TYPE
B	2-2-7	-68	-68	---	FRONT	VERT	TOTAL
D	12-11-10	-81	-81	---	FRONT	VERT	TOTAL

DESIGN CRITERIA

SPECIFIED LOADS:

TOP CH.	LL	=	21.0	PSF
	DL	=	6.0	PSF
BOT CH.	LL	=	0.0	PSF
	DL	=	7.4	PSF
TOTAL LOAD		=	34.4	PSF

SPACING = 24.0 IN. C/C

LOADING IN FLAT SECTION BASED ON A SLOPE OF 2.00/12 MINIMUM

GIRDER TYPE: CPrimeHip
LEFT SETBACK = 2-2-7
RIGHT SETBACK = 2-7-6
END SETBACK = 3-10-8
END WALL WIDTH = 0-0
CORNER FRAMING TYPE: CONVENTIONAL
END JACK TYPE: CONVENTIONAL
APPLIED TO FRONT SIDE
- ADDT'L LOADS BASED ON 55 % OF GSL.

THIS TRUSS IS DESIGNED FOR RESIDENTIAL OR SMALL BUILDING REQUIREMENTS OF PART 9, NBCC 2010, NBCC 2015

THIS DESIGN COMPLIES WITH:
- PART 9 OF OBC 2012, OBC 2018
- CSA 086-09, CSA 086-14
- TPIC 2011, TPIC 2014

(55 % OF 23.0 P.S.F. G.S.L. PLUS 8.4 P.S.F. RAIN LOAD) EQUALS 21.0 P.S.F. SPECIFIED ROOF LIVE LOAD

ALLOWABLE DEFL.(LL)= L/360 (0.52")
CALCULATED VERT. DEFL.(LL) = L/ 999 (0.02")
ALLOWABLE DEFL.(TL)= L/360 (0.52")
CALCULATED VERT. DEFL.(TL) = L/ 999 (0.04")

CANTILEVER DEFLECTION:
ALLOWABLE DEFL.(LL)= L/120 (0.19")
CALCULATED VERT. DEFL.(LL) = L/ 999 (0.01")
ALLOWABLE DEFL.(TL)= L/120 (0.19")
CALCULATED VERT. DEFL.(TL) = L/ 999 (0.01")

CSI: TC=0.65/1.00 (C-D:1) , BC=0.23/1.00 (H-J:4) , WB=0.35/1.00 (C-J:1) , SSI=0.33/1.00 (B-C:1)

DOL LUMBER=1.00 NAIL=1.00 LS BEND=1.00 COMP=1.00 SHEAR=1.00 TENS= 1.00

COMPANION LIVE LOAD FACTOR = 1.00

TRUSS PLATE MANUFACTURER IS NOT RESPONSIBLE FOR QUALITY CONTROL IN THE TRUSS MANUFACTURING PLANT .

NAIL VALUES

PLATE	GRIP(DRY) (PSI) MAX	MIN	SHEAR (PLI) MAX	MIN	SECTION (PLI) MAX	MIN
MT20	618	354	1667	788	1987	1656

PLATE PLACEMENT TOL. = 0.250 Inches

PLATE ROTATION TOL. = 5.0 Deg.

A18082059

CONTINUED ON PAGE 2

JOB NAME	TRUSS NAME	QUANTITY	PLY	JOB DESC.	DRWG NO.
300970	H32	1	1	TRUSS DESC.	JT# 45147

Alpa Roof Truss, Maple

Version 8.210 S Jun 13 2018 MiTek Industries, Inc. Wed Aug 15 14:10:53 2018 Page 1
ID:HSVaWlIDnhr?B6oeweH9vbyNdls-8psckfQO1rjV4qrhJj1iRPCJQV?7uwFZd7Ed62ynbLG

Scale = 1:42.8

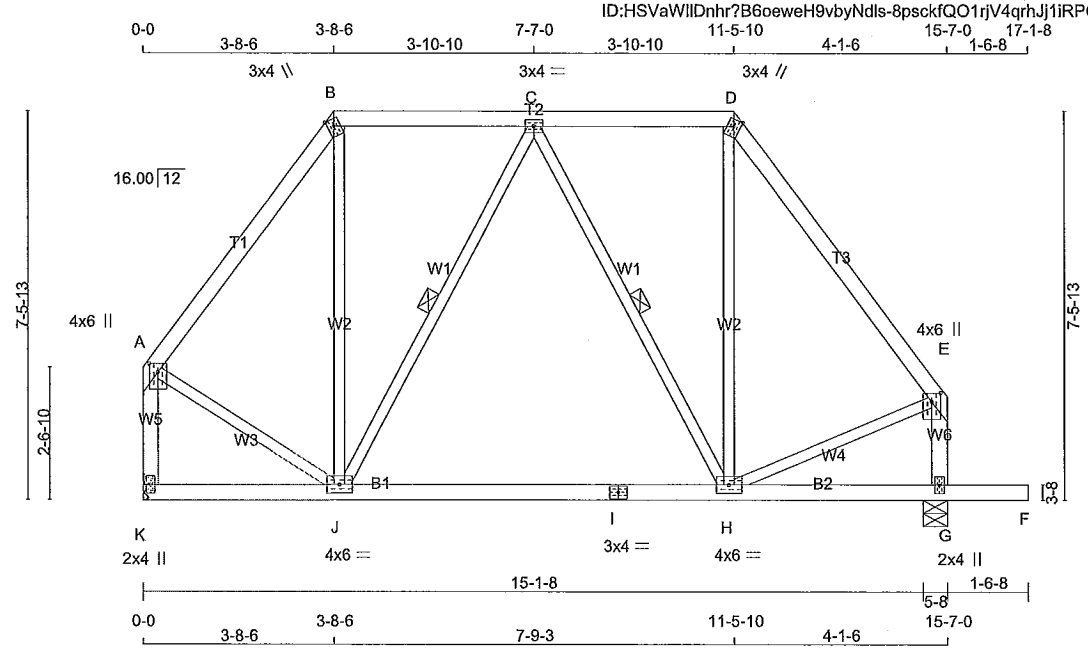

TOTAL WEIGHT = 79 lb
[M][F]

LUMBER
N. L. G. A. RULES

CHORDS	SIZE		LUMBER	DESCR.
A - B	2x4	DRY	No.2	SPF
B - D	2x4	DRY	No.2	SPF
D - E	2x4	DRY	No.2	SPF
K - A	2x4	DRY	No.2	SPF
G - E	2x4	DRY	No.2	SPF
K - I	2x4	DRY	No.2	SPF
I - F	2x4	DRY	No.2	SPF
ALL WEBS EXCEPT	2x3	DRY	No.2	SPF

DRY: SEASONED LUMBER.

PLATES (table is in inches)

JT	TYPE	PLATES	W	LEN	Y	X
A	TMVW+p	MT20	4.0	6.0	2.00	2.00
B	TTW+m	MT20	3.0	4.0	Edge	
C	TMWW-t	MT20	3.0	4.0		
D	TTW+m	MT20	3.0	4.0	Edge	
E	TMVW+p	MT20	4.0	6.0	2.00	2.00
G	BMV1+p	MT20	2.0	4.0		
H	BMWWW-t	MT20	4.0	6.0		
I	BS-t	MT20	3.0	4.0		
J	BMWWW-t	MT20	4.0	6.0		
K	BMV1+p	MT20	2.0	4.0		

Edge - INDICATES REFERENCE CORNER OF PLATE TOUCHES EDGE OF CHORD.

NOTE: Lateral brace(s) shown shall be 1x4 for Part 9 design as per OBC 9.23.13.11, and no less than 2x4 for Part 4 design.

LICENSED PROFESSIONAL ENGINEER
D. O'CONNOR
100009580
08/15/2018
PROVINCE OF ONTARIO

DIMENSIONS, SUPPORTS AND LOADINGS SPECIFIED BY FABRICATOR TO BE VERIFIED BY BUILDING DESIGNER

BEARINGS

JT	FACTORED GROSS REACTION VERT	HORZ	MAXIMUM FACTORED GROSS REACTION DOWN	HORZ	UPLIFT	INPUT BRG IN-SX	REQRD BRG IN-SX
K	752	0	752	0	0	MECHANICAL	
G	900	0	900	0	0	5-8	1-8

A SUITABLE HANGER/MECHANICAL CONNECTION IS REQUIRED AT JOINT K. MINIMUM BEARING LENGTH AT JOINT K = 1-8.

UNFACTORED REACTIONS

JT	1ST LCASE COMBINED	MAX./MIN. COMPONENT REACTIONS SNOW	LIVE	PERM.LIVE	WIND	DEAD	SOIL
K	536	327 / 0	0 / 0	0 / 0	0 / 0	209 / 0	0 / 0
G	642	392 / 0	0 / 0	0 / 0	0 / 0	250 / 0	0 / 0

BEARING MATERIAL TO BE SPF NO.2 OR BETTER AT JOINT(S) G

BRACING
TOP CHORD TO BE SHEATHED OR MAX. PURLIN SPACING = 6.25 FT.
MAX. UNBRACED BOTTOM CHORD LENGTH = 10.00 FT OR RIGID CEILING DIRECTLY APPLIED.

ALL PITCH BREAKS AND PERIMETER CORNER JOINTS MUST BE LATERALLY RESTRAINED.

1 LATERAL BRACE(S) AT 1/ 2 LENGTH OF C-J, C-H.

END VERTICAL(S) MUST BE SHEATHED OR HAVE BRACES AS INDICATED IN THE MAX. UNBRACED LENGTH COLUMN OF THE TABLE BELOW

LOADING
TOTAL LOAD CASES: (4)

CHORDS

MEMB. FR-TO	MAX. FACTORED FORCE (LBS)	FACTORED VERT. LOAD LC1 (PLF) FROM	TO	MAX CSI (LC)	MAX. UNBRAC LENGTH
A- B	-518 / 0	-78.0	-78.0	0.14 (1)	6.25
B- C	-310 / 0	-78.0	-78.0	0.15 (1)	6.25
C- D	-332 / 0	-78.0	-78.0	0.15 (1)	6.25
D- E	-553 / 0	-78.0	-78.0	0.18 (1)	6.25
K- A	-735 / 0	0.0	0.0	0.10 (1)	7.81
G- E	-730 / 0	0.0	0.0	0.08 (1)	7.81
K- J	0 / 0	-18.5	-18.5	0.17 (4)	10.00
J- I	0 / 418	-18.5	-18.5	0.21 (4)	10.00
I- H	0 / 418	-18.5	-18.5	0.21 (4)	10.00
H- G	0 / 0	-18.5	-18.5	0.17 (4)	10.00
G- F	0 / 0	-96.5	-96.5	0.16 (1)	10.00

WEBS

MEMB. FR-TO	MAX. FACTORED FORCE (LBS)	MAX CSI (LC)
J- B	0 / 152	0.04 (4)
J- C	-230 / 0	0.10 (1)
C- H	-184 / 0	0.08 (1)
H- D	0 / 164	0.04 (4)
A- J	0 / 355	0.08 (1)
H- E	0 / 353	0.08 (1)

DESIGN CRITERIA

SPECIFIED LOADS:

TOP CH.	LL	=	21.0	PSF
	DL	=	6.0	PSF
BOT CH.	LL	=	0.0	PSF
	DL	=	7.4	PSF
TOTAL LOAD		=	34.4	PSF

SPACING = 24.0 IN. C/C

LOADING IN FLAT SECTION BASED ON A SLOPE OF 2.00/12 MINIMUM

THIS TRUSS IS DESIGNED FOR RESIDENTIAL OR SMALL BUILDING REQUIREMENTS OF PART 9, NBCC 2010, NBCC 2015

THIS DESIGN COMPLIES WITH:
- PART 9 OF OBC 2012, OBC 2018
- CSA 086-09, CSA 086-14
- TPIC 2011, TPIC 2014

(55 % OF 23.0 P.S.F. G.S.L. PLUS 8.4 P.S.F. RAIN LOAD) EQUALS 21.0 P.S.F. SPECIFIED ROOF LIVE LOAD

ALLOWABLE DEFL.(LL)= L/360 (0.52")
CALCULATED VERT. DEFL.(LL) = L/ 999 (0.01")
ALLOWABLE DEFL.(TL)= L/360 (0.52")
CALCULATED VERT. DEFL.(TL) = L/ 999 (0.06")

CANTILEVER DEFLECTION:
ALLOWABLE DEFL.(LL)= L/120 (0.19")
CALCULATED VERT. DEFL.(LL) = L/ 999 (0.01")
ALLOWABLE DEFL.(TL)= L/120 (0.19")
CALCULATED VERT. DEFL.(TL) = L/ 999 (0.01")

CSI: TC=0.18/1.00 (D-E:1) , BC=0.21/1.00 (H-J:4) , WB=0.10/1.00 (C-J:1) , SSI=0.15/1.00 (C-D:1)

DOL LUMBER=1.00 NAIL=1.00 LS BEND=1.10 COMP=1.10 SHEAR=1.10 TENS= 1.10

COMPANION LIVE LOAD FACTOR = 1.00

TRUSS PLATE MANUFACTURER IS NOT RESPONSIBLE FOR QUALITY CONTROL IN THE TRUSS MANUFACTURING PLANT .

NAIL VALUES

PLATE	GRIP(DRY) (PSI) MAX	MIN	SHEAR (PLI) MAX	MIN	SECTION (PLI) MAX	MIN
MT20	618	354	1667	788	1987	1656

PLATE PLACEMENT TOL. = 0.250 inches

PLATE ROTATION TOL. = 5.0 Deg.

JSI GRIP= 0.82 (D) (INPUT = 0.90)
JSI METAL= 0.22 (I) (INPUT = 1.00)

A18082060

JOB NAME	TRUSS NAME	QUANTITY	PLY	JOB DESC.	DRWG NO.
300970	H33	1	1	TRUSS DESC.	JT# 45147

Alpa Roof Truss, Maple

Version 8.210 S Jun 13 2018 MiTek Industries, Inc. Wed Aug 15 14:10:55 2018 Page 1

ID:HSVaWIIDnhr?B6oeweH9vbyNdls-4CzN9KSeZSzDK8?4R83AWqHcZIhUMqGs4RjkBwynbLE

Scale = 1:54.3

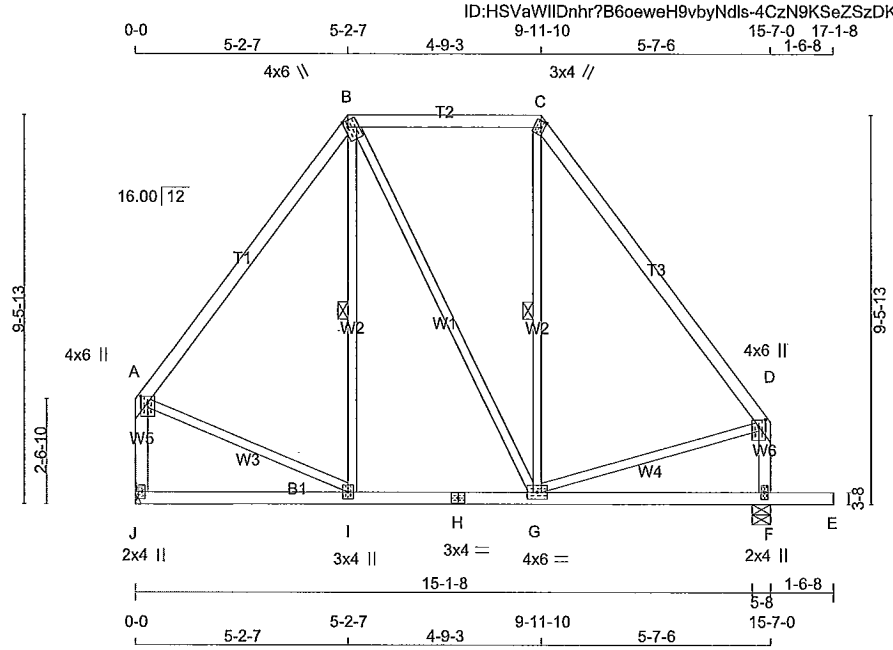

TOTAL WEIGHT = 82 lb

[M][F]

LUMBER

N. L. G. A. RULES

CHORDS	SIZE		LUMBER	DESCR.
A - B	2x4	DRY	No.2	SPF
B - C	2x4	DRY	No.2	SPF
C - D	2x4	DRY	No.2	SPF
J - A	2x4	DRY	No.2	SPF
F - D	2x4	DRY	No.2	SPF
J - H	2x4	DRY	No.2	SPF
H - E	2x4	DRY	No.2	SPF
ALL WEBS EXCEPT	2x3	DRY	No.2	SPF

DRY: SEASONED LUMBER.

PLATES (table is in inches)

JT	TYPE	PLATES	W	LEN	Y	X
A	TMVW+p	MT20	4.0	6.0	2.00	2.00
B	TTWW+m	MT20	4.0	6.0	1.75	1.00
C	TTW+m	MT20	3.0	4.0	1.75	1.00
D	TMVW+p	MT20	4.0	6.0	2.00	2.00
F	BMV1+p	MT20	2.0	4.0		
G	BMWWW-t	MT20	4.0	6.0		
H	BS-t	MT20	3.0	4.0		
I	BMWW+t	MT20	3.0	4.0		
J	BMV1+p	MT20	2.0	4.0		

NOTE: Lateral brace(s) shown shall be 1x4 for Part 9 design as per OBC 9.23.13.11, and no less than 2x4 for Part 4 design.

LICENSED PROFESSIONAL ENGINEER
D. O'CONNOR
100009580
08/15/2018
PROVINCE OF ONTARIO

DIMENSIONS, SUPPORTS AND LOADINGS SPECIFIED BY FABRICATOR TO BE VERIFIED BY BUILDING DESIGNER

BEARINGS

JT	FACTORED GROSS REACTION VERT	HORZ	MAXIMUM FACTORED GROSS REACTION DOWN	HORZ	UPLIFT	INPUT BRG IN-SX	REQRD BRG IN-SX
J	752	0	752	0	0	MECHANICAL	
F	900	0	900	0	0	5-8	1-8

A SUITABLE HANGER/MECHANICAL CONNECTION IS REQUIRED AT JOINT J. MINIMUM BEARING LENGTH AT JOINT J = 1-8.

UNFACTORED REACTIONS

JT	1ST LCASE COMBINED	MAX./MIN. COMPONENT REACTIONS SNOW	LIVE	PERM.LIVE	WIND	DEAD	SOIL
J	536	327 / 0	0 / 0	0 / 0	0 / 0	209 / 0	0 / 0
F	642	392 / 0	0 / 0	0 / 0	0 / 0	250 / 0	0 / 0

BEARING MATERIAL TO BE SPF NO.2 OR BETTER AT JOINT(S) F

BRACING

TOP CHORD TO BE SHEATHED OR MAX. PURLIN SPACING = 6.25 FT.
MAX. UNBRACED BOTTOM CHORD LENGTH = 10.00 FT OR RIGID CEILING DIRECTLY APPLIED.

ALL PITCH BREAKS AND PERIMETER CORNER JOINTS MUST BE LATERALLY RESTRAINED.

1 LATERAL BRACE(S) AT 1/ 2 LENGTH OF B-I, C-G.

END VERTICAL(S) MUST BE SHEATHED OR HAVE BRACES AS INDICATED IN THE MAX. UNBRACED LENGTH COLUMN OF THE TABLE BELOW

LOADING

TOTAL LOAD CASES: (4)

CHORDS

MEMB. FR-TO	MAX. FACTORED FORCE (LBS)	FACTORED VERT. LOAD LC1 (PLF) FROM	TO	MAX CSI (LC)	MAX. UNBRAC LENGTH
A- B	-486 / 0	-78.0	-78.0	0.28 (1)	6.25
B- C	-301 / 0	-78.0	-78.0	0.23 (1)	6.25
C- D	-504 / 0	-78.0	-78.0	0.33 (1)	6.25
J- A	-711 / 0	0.0	0.0	0.10 (1)	7.81
F- D	-707 / 0	0.0	0.0	0.08 (1)	7.81
J- I	0 / 0	-18.5	-18.5	0.11 (4)	10.00
I- H	0 / 290	-18.5	-18.5	0.15 (4)	10.00
H- G	0 / 290	-18.5	-18.5	0.15 (4)	10.00
G- F	0 / 0	-18.5	-18.5	0.13 (4)	10.00
F- E	0 / 0	-96.5	-96.5	0.16 (1)	10.00

WEBS

MEMB. FR-TO	MAX. FACTORED FORCE (LBS)	MAX CSI (LC)
I- B	-22 / 61	0.02 (4)
B- G	0 / 25	0.01 (1)
G- C	0 / 75	0.03 (4)
A- I	0 / 313	0.07 (1)
G- D	0 / 313	0.07 (1)

DESIGN CRITERIA

SPECIFIED LOADS:

TOP CH.	LL =	21.0	PSF
	DL =	6.0	PSF
BOT CH.	LL =	0.0	PSF
	DL =	7.4	PSF
TOTAL LOAD	=	34.4	PSF

SPACING = 24.0 IN. C/C

LOADING IN FLAT SECTION BASED ON A SLOPE OF 2.00/12 MINIMUM

THIS TRUSS IS DESIGNED FOR RESIDENTIAL OR SMALL BUILDING REQUIREMENTS OF PART 9, NBCC 2010, NBCC 2015

THIS DESIGN COMPLIES WITH:
- PART 9 OF OBC 2012, OBC 2018
- CSA 086-09, CSA 086-14
- TPIC 2011, TPIC 2014

(55 % OF 23.0 P.S.F. G.S.L. PLUS 8.4 P.S.F. RAIN LOAD) EQUALS 21.0 P.S.F. SPECIFIED ROOF LIVE LOAD

ALLOWABLE DEFL.(LL)= L/360 (0.52")
CALCULATED VERT. DEFL.(LL) = L/ 999 (0.01")
ALLOWABLE DEFL.(TL)= L/360 (0.52")
CALCULATED VERT. DEFL.(TL) = L/ 999 (0.04")

CANTILEVER DEFLECTION:
ALLOWABLE DEFL.(LL)= L/120 (0.19")
CALCULATED VERT. DEFL.(LL) = L/ 999 (0.01")
ALLOWABLE DEFL.(TL)= L/120 (0.19")
CALCULATED VERT. DEFL.(TL) = L/ 999 (0.01")

CSI: TC=0.33/1.00 (C-D:1) , BC=0.16/1.00 (E-F:1) , WB=0.07/1.00 (A-I:1) , SSI=0.14/1.00 (B-C:1)

DOL LUMBER=1.00 NAIL=1.00 LS BEND=1.10 COMP=1.10 SHEAR=1.10 TENS= 1.10

COMPANION LIVE LOAD FACTOR = 1.00

AUTOSOLVE HEELS OFF

TRUSS PLATE MANUFACTURER IS NOT RESPONSIBLE FOR QUALITY CONTROL IN THE TRUSS MANUFACTURING PLANT .

NAIL VALUES

PLATE	GRIP(DRY) (PSI) MAX	MIN	SHEAR (PLI) MAX	MIN	SECTION (PLI) MAX	MIN
MT20	618	354	1667	788	1987	1656

PLATE PLACEMENT TOL. = 0.250 inches

PLATE ROTATION TOL. = 5.0 Deg.

JSI GRIP= 0.75 (I) (INPUT = 0.90)
JSI METAL= 0.21 (D) (INPUT = 1.00)

A18082061

JOB NAME	TRUSS NAME	QUANTITY	PLY	JOB DESC.	DRWG NO.
300970	H34A	1	2	TRUSS DESC.	JT# 45147

Alpa Roof Truss, Maple

Version 8.210 S Jun 13 2018 MiTek Industries, Inc. Wed Aug 15 14:10:57 2018 Page 1

ID:HSVaWIIDnhr?B6oeweH9vbyNdls-0a57a0Tv54DxZS9SYY5ebFMzd6A3qcg9YlCrFpynbLC

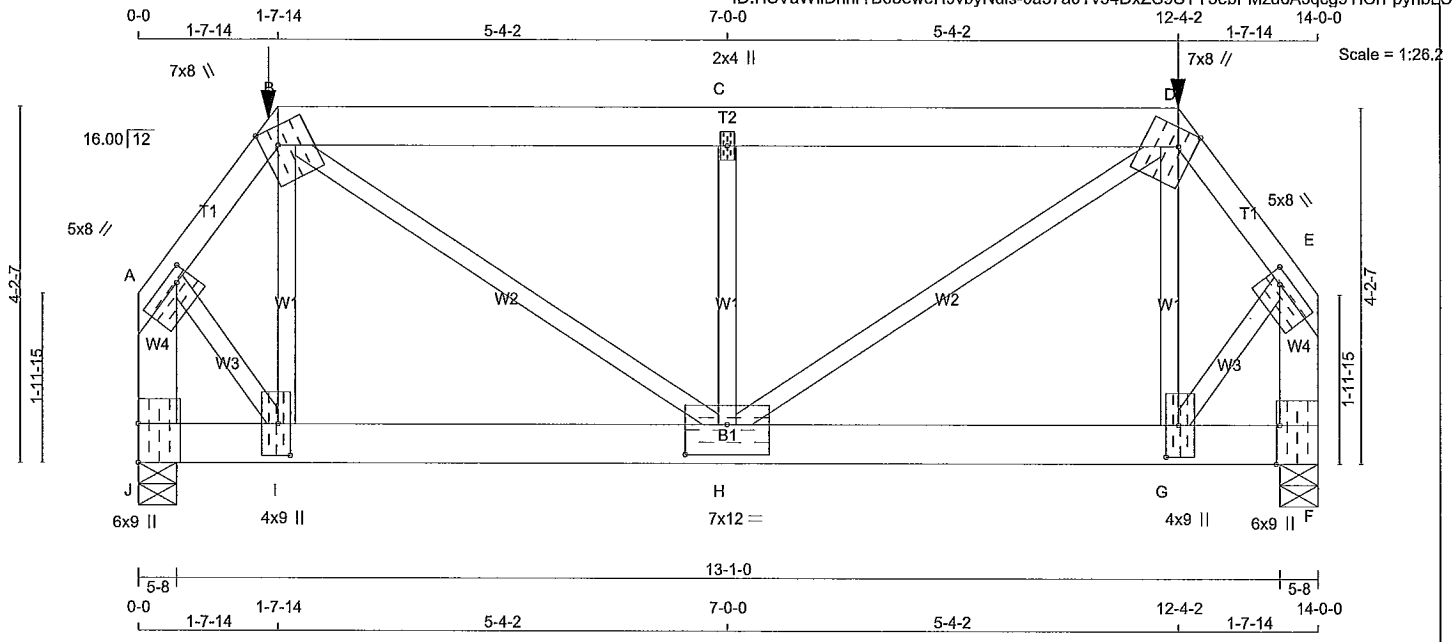

TOTAL WEIGHT = 2 X 79 = 157 lb

[M]

LUMBER

N. L. G. A. RULES

CHORDS	SIZE		LUMBER	DESCR.
A - B	2x4	DRY	No.2	SPF
B - D	2x6	DRY	No.2	SPF
D - E	2x4	DRY	No.2	SPF
J - A	2x6	DRY	No.2	SPF
F - E	2x6	DRY	No.2	SPF
J - F	2x6	DRY	No.2	SPF
ALL WEBS EXCEPT	2x3	DRY	No.2	SPF

DRY: SEASONED LUMBER.

DESIGN CONSISTS OF 2 TRUSSES BUILT SEPARATELY THEN FASTENED TOGETHER AS FOLLOWS:

CHORDS	#ROWS	SURFACE SPACING (IN)	LOAD(PLF)
TOP CHORDS : (0.122"X3") SPIRAL NAILS			
A- B	1	12	SIDE(61.0)
D- E	1	12	SIDE(61.0)
B- D	2	12	SIDE(61.0)
J- A	2	12	TOP
F- E	2	12	TOP
BOTTOM CHORDS : (0.122"X3") SPIRAL NAILS			
J- F	2	6	SIDE(457.7)
WEBS : (0.122"X3") SPIRAL NAILS			
2x3	1	6	

NAILS TO BE DRIVEN FROM ONE SIDE ONLY.

GIRDER NAILING ASSUMES NAILED HANGERS ARE FASTENED WITH MIN. 3-0 INCH NAILS.

TOP - COMPONENTS ARE LOADED FROM THE TOP AND MUST BE PLACED ON TOP EDGE OF ALL PLIES FOR THE LOAD TO BE TRANSFERRED TO EACH PLY.

SIDE - PLF SHOWN IS THE EQUIVALENT UDL APPLIED TO ONE SIDE THAT THE CORRESPONDING NAILING PATTERN SHALL BE CAPABLE OF TRANSFERING. REMAINING PLF MUST BE APPLIED ON THE OPPOSITE SIDE OR ON THE TOP.

NOTE: Lateral brace(s) shown shall be 1x4 for Part 9 design as per OBC 9.23.13.11, and no less than 2x4 for Part 4 design.

LICENSED PROFESSIONAL ENGINEER
D. O'CONNOR
100009580
08/15/2018
PROVINCE OF ONTARIO

DIMENSIONS, SUPPORTS AND LOADINGS SPECIFIED BY FABRICATOR TO BE VERIFIED BY BUILDING DESIGNER

BEARINGS

JT	FACTORED GROSS REACTION VERT	HORZ	MAXIMUM FACTORED GROSS REACTION DOWN	HORZ	UPLIFT	INPUT BRG IN-SX	REQRD BRG IN-SX
J	7094	0	7094	0	0	5-8	5-8
F	7094	0	7094	0	0	5-8	5-8

UNFACTORED REACTIONS

JT	1ST LCASE COMBINED	MAX./MIN. COMPONENT REACTIONS SNOW	LIVE	PERM.LIVE	WIND	DEAD	SOIL
J	5058	3088 / 0	0 / 0	0 / 0	0 / 0	1970 / 0	0 / 0
F	5058	3088 / 0	0 / 0	0 / 0	0 / 0	1970 / 0	0 / 0

BEARING MATERIAL TO BE SPF NO.2 OR BETTER AT JOINT(S) J, F
BEARING SIZE FACTOR = 1.15 AT JNT(S) J, F (BASED ON SUPPORT DEPTH = 1-8)

BRACING

TOP CHORD TO BE SHEATHED OR MAX. PURLIN SPACING = 4.11 FT.
MAX. UNBRACED BOTTOM CHORD LENGTH = 10.00 FT OR RIGID CEILING DIRECTLY APPLIED.

ALL PITCH BREAKS AND PERIMETER CORNER JOINTS MUST BE LATERALLY RESTRAINED.

LOADING

TOTAL LOAD CASES: (4)

CHORDS

MEMB. FR-TO	MAX. FACTORED FORCE (LBS)	FACTORED VERT. LOAD (PLF) FROM	TO	LC1 CSI (LC)	MAX. UNBRAC LENGTH
A- B	-5406 / 0	-78.0	-78.0	0.11 (1)	4.11
B- C	-7170 / 0	-78.0	-78.0	0.19 (1)	4.35
C- D	-7170 / 0	-78.0	-78.0	0.19 (1)	4.35
D- E	-5406 / 0	-78.0	-78.0	0.11 (1)	4.11
J- A	-7194 / 0	0.0	0.0	0.29 (1)	5.58
F- E	-7194 / 0	0.0	0.0	0.29 (1)	5.58
J- I	0 / 0	-934.0	-934.0	0.60 (1)	10.00
I- H	0 / 3273	-934.0	-934.0	0.98 (1)	10.00
H- G	0 / 3273	-934.0	-934.0	0.98 (1)	10.00
G- F	0 / 0	-934.0	-934.0	0.60 (1)	10.00

WEBS

MEMB. FR-TO	MAX. FACTORED FORCE (LBS)	MAX CSI (LC)
I- B	0 / 1303	0.16 (1)
B- H	0 / 4755	0.59 (1)
H- C	-381 / 0	0.05 (1)
H- D	0 / 4755	0.59 (1)
G- D	0 / 1303	0.16 (1)
A- I	0 / 4280	0.53 (1)
G- E	0 / 4280	0.53 (1)

FACTORED CONCENTRATED LOADS (LBS)

JT	LOC.	LC1	MAX-	MAX+	FACE	DIR.	TYPE
B	1-7-14	-11	-11	---	BACK	VERT	TOTAL
D	12-4-2	-11	-11	---	BACK	VERT	TOTAL

DESIGN CRITERIA

SPECIFIED LOADS:

TOP CH.	LL	=	21.0	PSF
	DL	=	6.0	PSF
BOT CH.	LL	=	0.0	PSF
	DL	=	7.4	PSF
TOTAL LOAD		=	34.4	PSF

SPACING = 24.0 IN. C/C

LOADING IN FLAT SECTION BASED ON A SLOPE OF 2.00/12 MINIMUM

GIRDER TYPE: CStdGirder
START DISTANCE = 0-0
START SPAN CARRIED = 40-5-0
END DISTANCE = 14-0-0
END SPAN CARRIED = 40-5-0
END WALL WIDTH = 5-8
APPLIED TO FRONT SIDE OF BOTTOM CHORD.
- ADDT'L LOADS BASED ON 55 % OF GSL.

GIRDER TYPE: CPrimeHip
SIDE SETBACK = 1-7-14
END SETBACK = 2-0-0
END WALL WIDTH = 0-0
CORNER FRAMING TYPE: CONVENTIONAL
END JACK TYPE: CONVENTIONAL
APPLIED TO BACK SIDE
- ADDT'L LOADS BASED ON 55 % OF GSL.

THIS TRUSS IS DESIGNED FOR RESIDENTIAL OR SMALL BUILDING REQUIREMENTS OF PART 9, NBCC 2010, NBCC 2015

THIS DESIGN COMPLIES WITH:
- PART 9 OF OBC 2012, OBC 2018
- CSA 086-09, CSA 086-14
- TPIC 2011, TPIC 2014

(55 % OF 23.0 P.S.F. G.S.L. PLUS 8.4 P.S.F. RAIN LOAD) EQUALS 21.0 P.S.F. SPECIFIED ROOF LIVE LOAD

ALLOWABLE DEFL.(LL)= L/360 (0.47")
CALCULATED VERT. DEFL.(LL) = L/ 999 (0.07")
ALLOWABLE DEFL.(TL)= L/360 (0.47")
CALCULATED VERT. DEFL.(TL) = L/ 999 (0.14")

CSI: TC=0.29/1.00 (E-F:1) , BC=0.98/1.00 (H-I:1) , WB=0.59/1.00 (D-H:1) , SSI=0.84/1.00 (G-H:1)

DOL LUMBER=1.00 NAIL=1.00 LS BEND=1.00 COMP=1.00 SHEAR=1.00 TENS= 1.00

COMPANION LIVE LOAD FACTOR = 1.00

AUTOSOLVE HEELS OFF

TRUSS PLATE MANUFACTURER IS NOT RESPONSIBLE FOR QUALITY CONTROL IN THE TRUSS MANUFACTURING PLANT .

NAIL VALUES

PLATE	GRIP(DRY) (PSI) MAX	MIN	SHEAR (PLI) MAX	MIN	SECTION (PLI) MAX	MIN
MT20	618	354	1667	788	1987	1656

A18082062

CONTINUED ON PAGE 2

JOB NAME	TRUSS NAME	QUANTITY	PLY	JOB DESC.	DRWG NO.
300970	H34A	1	2	TRUSS DESC.	

PLATES (table is in inches)

JT	TYPE	PLATES	W	LEN	Y	X
A	TMVW-t	MT20	5.0	8.0	1.50	2.00
B	TTWW+m	MT20	7.0	8.0	2.50	2.25
C	TMW+w	MT20	2.0	4.0		
D	TTWW+m	MT20	7.0	8.0	2.50	2.25
E	TMVW-t	MT20	5.0	8.0	1.50	2.00
F	BMV1+t	MT20	6.0	9.0	Edge	0.50
G	BMWW+t	MT20	4.0	9.0	4.50	1.75
H	BMWWW-t	MT20	7.0	12.0	4.25	6.00
I	BMWW+t	MT20	4.0	9.0	4.50	1.75
J	BMV1+t	MT20	6.0	9.0	5.50	

Edge - INDICATES REFERENCE CORNER OF PLATE TOUCHES EDGE OF CHORD.

HANGERS NOTES

1) SPECIAL HANGER(S) OR CONNECTION(S) REQUIRED TO SUPPORT CONCENTRATED LOAD(S) 10.8 lbs FACTORED DOWN AT 12-4-2, AND 10.8 lbs FACTORED DOWN AT 1-7-14 ON TOP CHORD. DESIGN FOR UNSPECIFIED CONNECTION(S) IS DELEGATED TO THE BUILDING DESIGNER.

PLATE PLACEMENT TOL. = 0.250 inches

PLATE ROTATION TOL. = 5.0 Deg.

JSI GRIP= 0.87 (I) (INPUT = 0.90)
JSI METAL= 0.74 (G) (INPUT = 1.00)

NOTE: Lateral brace(s) shown shall be 1x4 for Part 9 design as per OBC 9.23.13.11, and no less than 2x4 for Part 4 design.

LICENSED PROFESSIONAL ENGINEER
D. O'CONNOR
100009580
08/15/2018
PROVINCE OF ONTARIO

A18082062(2)

JOB NAME	TRUSS NAME	QUANTITY	PLY	JOB DESC.	DRWG NO.
300970	H35A	1	1	TRUSS DESC.	JT# 45147

Alpa Roof Truss, Maple

Version 8.210 S Jun 13 2018 MiTek Industries, Inc. Wed Aug 15 14:11:01 2018 Page 1

ID:HSVaWlIDnhr?B6oeweH9vbyNdls-vLKeQOWP8IjN23TEnOAam5XfEjj6mUZITNA3OaynbL8

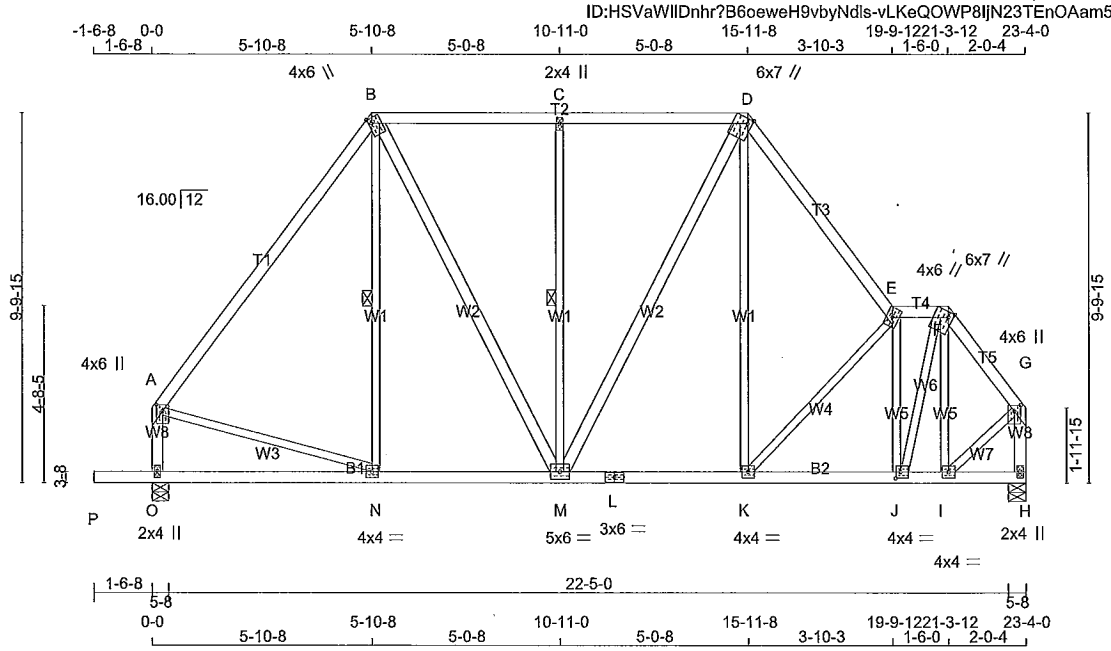

TOTAL WEIGHT = 136 lb

[M][F]

LUMBER

N. L. G. A. RULES

CHORDS	SIZE		LUMBER	DESCR.
A - B	2x4	DRY	1650F 1.5E	SPF
B - D	2x4	DRY	No.2	SPF
D - E	2x4	DRY	No.2	SPF
E - F	2x4	DRY	No.2	SPF
F - G	2x4	DRY	No.2	SPF
O - A	2x4	DRY	No.2	SPF
H - G	2x4	DRY	No.2	SPF
P - L	2x4	DRY	No.2	SPF
L - H	2x4	DRY	No.2	SPF
ALL WEBS	2x3	DRY	No.2	SPF
EXCEPT				
B - M	2x4	DRY	No.2	SPF
M - D	2x4	DRY	No.2	SPF

DRY: SEASONED LUMBER.

PLATES (table is in inches)

JT	TYPE	PLATES	W	LEN	Y	X
A	TMVW+p	MT20	4.0	6.0	2.00	2.00
B	TTWW+m	MT20	4.0	6.0	1.75	1.00
C	TMW+w	MT20	2.0	4.0		
D	TTWW+m	MT20	6.0	7.0	Edge	1.50
E	TTWW+m	MT20	4.0	6.0		
F	TTWW+m	MT20	6.0	7.0	Edge	1.50
G	TMVW+p	MT20	4.0	6.0	2.00	2.00
H	BMV1+p	MT20	2.0	4.0		
I, K, N						
I	BMWW-t	MT20	4.0	4.0		
J	BMWW-t	MT20	4.0	4.0	2.00	1.50
L	BS-t	MT20	3.0	6.0		
M	BMWWW-t	MT20	5.0	6.0		
O	BMV1+p	MT20	2.0	4.0		

Edge - INDICATES REFERENCE CORNER OF PLATE TOUCHES EDGE OF CHORD.

NOTE: Lateral brace(s) shown shall be 1x4 for Part 9 design as per OBC 9.23.13.11, and no less than 2x4 for Part 4 design.

LICENSED PROFESSIONAL ENGINEER
D. O'CONNOR
100009580
08/15/2018
PROVINCE OF ONTARIO

DIMENSIONS, SUPPORTS AND LOADINGS SPECIFIED BY FABRICATOR TO BE VERIFIED BY BUILDING DESIGNER

BEARINGS

JT	FACTORED GROSS REACTION VERT	HORZ	MAXIMUM FACTORED GROSS REACTION DOWN	HORZ	UPLIFT	INPUT BRG IN-SX	REQRD BRG IN-SX
O	1314	0	1314	0	0	5-8	1-15
H	1161	0	1161	0	0	5-8	1-12

UNFACTORED REACTIONS

JT	1ST LCASE COMBINED	MAX./MIN. COMPONENT REACTIONS SNOW	LIVE	PERM.LIVE	WIND	DEAD	SOIL
O	941	554 / 0	0 / 0	0 / 0	0 / 0	386 / 0	0 / 0
H	831	490 / 0	0 / 0	0 / 0	0 / 0	341 / 0	0 / 0

BEARING MATERIAL TO BE SPF NO.2 OR BETTER AT JOINT(S) O, H

BRACING

FOR SECTION B-D, MAX. PURLIN SPACING = 2.00 FT.
FOR OTHER SECTIONS, TOP CHORD TO BE SHEATHED OR MAX. PURLIN SPACING = 5.98 FT.
MAX. UNBRACED BOTTOM CHORD LENGTH = 10.00 FT OR RIGID CEILING DIRECTLY APPLIED.

ALL PITCH BREAKS AND PERIMETER CORNER JOINTS MUST BE LATERALLY RESTRAINED.

1 LATERAL BRACE(S) AT 1/ 2 LENGTH OF B-N, C-M.

END VERTICAL(S) MUST BE SHEATHED OR HAVE BRACES AS INDICATED IN THE MAX. UNBRACED LENGTH COLUMN OF THE TABLE BELOW

LOADING

TOTAL LOAD CASES: (4)

CHORDS

MEMB. FR-TO	MAX. FACTORED FORCE (LBS)	FACTORED VERT. LOAD (PLF) FROM	TO	LC1 MAX CSI (LC)	MAX. UNBRAC LENGTH
A- B	-927 / 0	-78.0	-78.0	0.31 (1)	6.25
B- C	-751 / 0	-85.5	-85.5	0.28 (1)	2.00
C- D	-751 / 0	-85.5	-85.5	0.28 (1)	2.00
D- E	-1045 / 0	-78.0	-78.0	0.17 (1)	5.98
E- F	-778 / 0	-78.0	-78.0	0.03 (1)	6.25
F- G	-861 / 0	-78.0	-78.0	0.05 (1)	6.25
O- A	-1121 / 0	0.0	0.0	0.13 (1)	7.49
H- G	-1157 / 0	0.0	0.0	0.13 (1)	7.40
P- O	0 / 0	-96.5	-96.5	0.16 (1)	10.00
O- N	0 / 0	-18.5	-18.5	0.15 (4)	10.00
N- M	0 / 553	-18.5	-18.5	0.20 (4)	10.00
M- L	0 / 630	-18.5	-18.5	0.15 (1)	10.00
L- K	0 / 630	-18.5	-18.5	0.15 (1)	10.00
K- J	0 / 798	-18.5	-18.5	0.18 (1)	10.00
J- I	0 / 503	-18.5	-18.5	0.13 (1)	10.00
I- H	0 / 0	-18.5	-18.5	0.05 (1)	10.00

WEBS

MEMB. FR-TO	MAX. FACTORED FORCE (LBS)	MAX CSI (LC)
N- B	-31 / 68	0.02 (4)
B- M	0 / 423	0.07 (1)
M- C	-520 / 0	0.34 (1)
M- D	0 / 260	0.04 (1)
K- D	0 / 286	0.06 (1)
K- E	-255 / 0	0.15 (1)
J- E	-856 / 0	0.28 (1)
J- F	0 / 899	0.20 (1)
I- F	-300 / 0	0.10 (1)
A- N	0 / 573	0.13 (1)
I- G	0 / 640	0.14 (1)

DESIGN CRITERIA

SPECIFIED LOADS:

TOP CH.	LL	=	21.0	PSF
	DL	=	6.0	PSF
BOT CH.	LL	=	0.0	PSF
	DL	=	7.4	PSF
TOTAL LOAD		=	34.4	PSF

SPACING = 24.0 IN. C/C

LOADING IN HIGHEST FLAT SECTION BASED ON PIGGYBACK TRUSS WITH SLOPES OF 16.00/12 AND -16.00/12 AND RESPECTIVE WALL HEIGHTS OF 0-0 AND 0-0 AND AN ADDITIONAL DEAD LOAD OF 3.0 P.S.F.

LOADING IN OTHER FLAT SECTIONS BASED ON A SLOPE OF 16.00/12

THIS TRUSS IS DESIGNED FOR RESIDENTIAL OR SMALL BUILDING REQUIREMENTS OF PART 9, NBCC 2010, NBCC 2015

THIS DESIGN COMPLIES WITH:
- PART 9 OF OBC 2012, OBC 2018
- CSA 086-09, CSA 086-14
- TPIC 2011, TPIC 2014

(55 % OF 23.0 P.S.F. G.S.L. PLUS 8.4 P.S.F. RAIN LOAD) EQUALS 21.0 P.S.F. SPECIFIED ROOF LIVE LOAD

ALLOWABLE DEFL.(LL)= L/360 (0.78")
CALCULATED VERT. DEFL.(LL) = L/ 999 (0.02")
ALLOWABLE DEFL.(TL)= L/360 (0.78")
CALCULATED VERT. DEFL.(TL) = L/ 999 (0.06")

CANTILEVER DEFLECTION:
ALLOWABLE DEFL.(LL)= L/120 (0.19")
CALCULATED VERT. DEFL.(LL) = L/ 999 (0.01")
ALLOWABLE DEFL.(TL)= L/120 (0.19")
CALCULATED VERT. DEFL.(TL) = L/ 999 (0.01")

CSI: TC=0.31/1.00 (A-B:1) , BC=0.20/1.00 (M-N:4) , WB=0.34/1.00 (C-M:1) , SSI=0.21/1.00 (C-D:1)

DOL LUMBER=1.00 NAIL=1.00 LS BEND=1.10 COMP=1.10 SHEAR=1.10 TENS= 1.10

COMPANION LIVE LOAD FACTOR = 1.00

AUTOSOLVE RIGHT HEEL ONLY

TRUSS PLATE MANUFACTURER IS NOT RESPONSIBLE FOR QUALITY CONTROL IN THE TRUSS MANUFACTURING PLANT .

NAIL VALUES

PLATE	GRIP(DRY) (PSI) MAX	MIN	SHEAR (PLI) MAX	MIN	SECTION (PLI) MAX	MIN
MT20	618	354	1667	788	1987	1656

PLATE PLACEMENT TOL. = 0.250 inches

PLATE ROTATION TOL. = 5.0 Deg.

A18082063

CONTINUED ON PAGE 2

JOB NAME	TRUSS NAME	QUANTITY	PLY	JOB DESC.	DRWG NO.
300970	H35	1	1	TRUSS DESC.	JT# 45147

Alpa Roof Truss, Maple

Version 8.210 S Jun 13 2018 MiTek Industries, Inc. Wed Aug 15 14:10:59 2018 Page 1
ID:HSVaWIIDnhr?B6oeweH9vbyNdls-yzDu?iV9dhTfolJrgz86hgSBmvwXIXpS?3hyKhynbLA

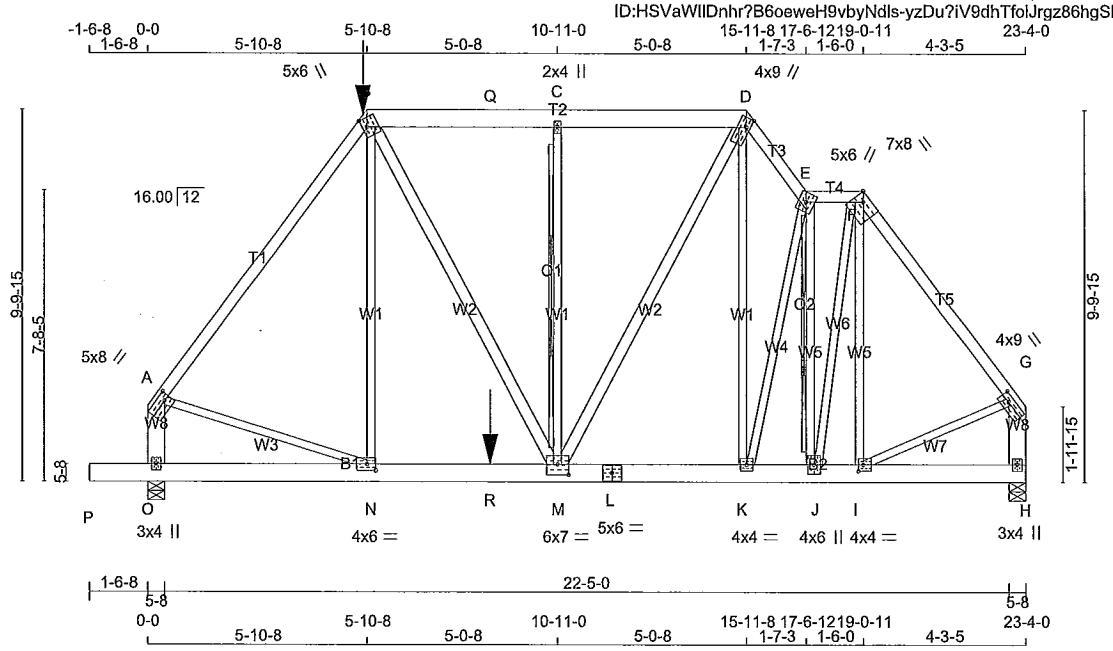

TOTAL WEIGHT = 170 lb

LUMBER
N. L. G. A. RULES

CHORDS	SIZE		LUMBER	DESCR.
A - B	2x4	DRY	1650F 1.5E	SPF
B - D	2x6	DRY	No.2	SPF
D - E	2x4	DRY	No.2	SPF
E - F	2x4	DRY	No.2	SPF
F - G	2x4	DRY	No.2	SPF
O - A	2x6	DRY	No.2	SPF
H - G	2x6	DRY	No.2	SPF
P - L	2x6	DRY	1650F 1.5E	SPF
L - H	2x6	DRY	1650F 1.5E	SPF
ALL WEBS	2x3	DRY	No.2	SPF
EXCEPT				
B - M	2x4	DRY	No.2	SPF
M - D	2x4	DRY	No.2	SPF

DRY: SEASONED LUMBER.

PLATES (table is in inches)

JT	TYPE	PLATES	W	LEN	Y	X
A	TMVW-t	MT20	5.0	8.0	2.25	2.00
B	TTWW+m	MT20	5.0	6.0	2.75	1.50
C	TMW+w	MT20	2.0	4.0		
D	TTWW+m	MT20	4.0	9.0	3.00	1.25
E	TTWW+m	MT20	5.0	6.0		
F	TTWW-h	MT20	7.0	8.0	Edge	2.75
G	TMVW-t	MT20	4.0	9.0	1.75	3.00
H	BMV1+p	MT20	3.0	4.0		
I	BMWW-t	MT20	4.0	4.0	2.00	1.50
J	BMWW+t	MT20	4.0	6.0		
K	BMWW-t	MT20	4.0	4.0		
L	BS-t	MT20	5.0	6.0		
M	BMWWW-t	MT20	6.0	7.0	3.25	3.50
N	BMWW-t	MT20	4.0	6.0	2.00	2.75
O	BMV1+p	MT20	3.0	4.0		

Edge - INDICATES REFERENCE CORNER OF PLATE TOUCHES EDGE OF CHORD.

HANGERS NOTES

NOTE: Lateral brace(s) shown shall be 1x4 for Part 9 design as per OBC 9.23.13.11, and no less than 2x4 for Part 4 design.

LICENSED PROFESSIONAL ENGINEER
D. O'CONNOR
100009580
08/15/2018
PROVINCE OF ONTARIO

DIMENSIONS, SUPPORTS AND LOADINGS SPECIFIED BY FABRICATOR TO BE VERIFIED BY BUILDING DESIGNER

BEARINGS

JT	FACTORED GROSS REACTION VERT	HORZ	MAXIMUM FACTORED GROSS REACTION DOWN	HORZ	UPLIFT	INPUT BRG IN-SX	REQRD BRG IN-SX
O	2724	0	2724	0	0	5-8	3-2
H	1899	0	1899	0	0	5-8	2-1

UNFACTORED REACTIONS

JT	1ST LCASE COMBINED	SNOW	MAX./MIN. COMPONENT REACTIONS LIVE	PERM.LIVE	WIND	DEAD	SOIL
O	1929	1254 / 0	0 / 0	0 / 0	0 / 0	675 / 0	0 / 0
H	1343	882 / 0	0 / 0	0 / 0	0 / 0	461 / 0	0 / 0

BEARING MATERIAL TO BE SPF NO.2 OR BETTER AT JOINT(S) O, H

BRACING
TOP CHORD TO BE SHEATHED OR MAX. PURLIN SPACING = 4.34 FT.
MAX. UNBRACED BOTTOM CHORD LENGTH = 10.00 FT OR RIGID CEILING DIRECTLY APPLIED.

ALL PITCH BREAKS AND PERIMETER CORNER JOINTS MUST BE LATERALLY RESTRAINED.

2x4 DRY SPF No.2 T-BRACE AT C-M, E-J

FASTEN T AND I-BRACES TO NARROW EDGE OF WEB WITH ONE ROW PER PLY OF 3" COMMON WIRE NAILS @ 6" O.C. WITH 3" MINIMUM END DISTANCE. BRACE MUST COVER 90% OF WEB LENGTH.

END VERTICAL(S) MUST BE SHEATHED OR HAVE BRACES AS INDICATED IN THE MAX. UNBRACED LENGTH COLUMN OF THE TABLE BELOW

LOADING
TOTAL LOAD CASES: (4)

CHORDS

MEMB. FR-TO	MAX. FACTORED FORCE (LBS)	FACTORED VERT. LOAD (PLF) FROM	TO	LC1 MAX CSI (LC)	MAX. UNBRAC LENGTH
A- B	-2428 / 0	-78.0	-78.0	0.82 (1)	4.34
B- Q	-1821 / 0	-153.5	-153.5	0.26 (1)	5.58
Q- C	-1821 / 0	-78.0	-78.0	0.26 (1)	5.58
C- D	-1821 / 0	-78.0	-78.0	0.21 (1)	5.66
D- E	-1955 / 0	-78.0	-78.0	0.09 (1)	4.74
E- F	-1214 / 0	-78.0	-78.0	0.05 (1)	5.75
F- G	-1711 / 0	-78.0	-78.0	0.40 (1)	4.69
O- A	-2543 / 0	0.0	0.0	0.21 (1)	6.46
H- G	-1895 / 0	0.0	0.0	0.15 (1)	7.25
P- O	0 / 0	-96.5	-96.5	0.06 (1)	10.00
O- N	0 / 0	-36.4	-36.4	0.23 (1)	10.00
N- R	0 / 1460	-36.4	-36.4	0.72 (1)	10.00
R- M	0 / 1460	-18.5	-18.5	0.72 (1)	10.00
M- L	0 / 1190	-18.5	-18.5	0.44 (1)	10.00
L- K	0 / 1190	-18.5	-18.5	0.44 (1)	10.00
K- J	0 / 1266	-18.5	-18.5	0.22 (1)	10.00
J- I	0 / 1021	-18.5	-18.5	0.16 (1)	10.00
I- H	0 / 0	-18.5	-18.5	0.08 (1)	10.00

WEBS

MEMB. FR-TO	MAX. FACTORED FORCE (LBS)	MAX CSI (LC)
N- B	0 / 395	0.10 (4)
B- M	0 / 761	0.13 (1)
M- C	-567 / 0	0.39 (1)
M- D	0 / 1332	0.24 (1)
K- D	0 / 168	0.05 (4)
K- E	-344 / 0	0.38 (1)
J- E	-1340 / 0	0.55 (1)
J- F	0 / 1169	0.29 (1)
I- F	-4 / 49	0.02 (4)
A- N	0 / 1502	0.37 (1)
I- G	0 / 1081	0.27 (1)

FACTORED CONCENTRATED LOADS (LBS)

JT	LOC.	LC1	MAX-	MAX+	FACE	DIR.	TYPE
B	5-10-8	-334	-334	---	FRONT	VERT	TOTAL
R	9-1-7	-1481	-1481	---	FRONT	VERT	TOTAL

DESIGN CRITERIA

*** SPECIAL LOADS ANALYSIS ***
GEOMETRY AND/OR BASIC LOADS CHANGED BY USER.
LOADS WERE DERIVED FROM USER INPUT
NO FURTHER MODIFICATIONS WERE MADE

SPECIFIED LOADS:

TOP CH.	LL	=	21.0	PSF
	DL	=	6.0	PSF
BOT CH.	LL	=	0.0	PSF
	DL	=	7.4	PSF
TOTAL LOAD		=	34.4	PSF

SPACING = 24.0 IN. C/C

LOADING IN ALL FLAT SECTIONS BASED ON A SLOPE OF 2.00/12 MINIMUM

GIRDER TYPE: CPrimeHip
LEFT SETBACK = 5-10-8
RIGHT SETBACK = 4-3-5
END SETBACK = 5-10-8
END WALL WIDTH = 0-0
CORNER FRAMING TYPE: CONVENTIONAL
END JACK TYPE: CONVENTIONAL
APPLIED TO FRONT SIDE
- ADDT'L LOADS BASED ON 55 % OF GSL.
LOADS APPLIED TO FIRST 9-1-7 OF SPAN MEASURED FROM THE LEFT.

*** NON STANDARD GIRDER ***
ADDT'L USER-DEFINED LOADS APPLIED TO ALL LOAD CASES.

THIS TRUSS IS DESIGNED FOR RESIDENTIAL OR SMALL BUILDING REQUIREMENTS OF PART 9, NBCC 2010, NBCC 2015

THIS DESIGN COMPLIES WITH:
- PART 9 OF OBC 2012, OBC 2018
- CSA 086-09, CSA 086-14
- TPIC 2011, TPIC 2014

(55 % OF 23.0 P.S.F. G.S.L. PLUS 8.4 P.S.F. RAIN LOAD) EQUALS 21.0 P.S.F. SPECIFIED ROOF LIVE LOAD

ALLOWABLE DEFL.(LL)= L/360 (0.78")
CALCULATED VERT. DEFL.(LL) = L/ 999 (0.10")
ALLOWABLE DEFL.(TL)= L/360 (0.78")
CALCULATED VERT. DEFL.(TL) = L/ 999 (0.18")

CANTILEVER DEFLECTION:
ALLOWABLE DEFL.(LL)= L/120 (0.19")
CALCULATED VERT. DEFL.(LL) = L/ 999 (0.00")
ALLOWABLE DEFL.(TL)= L/120 (0.19")
CALCULATED VERT. DEFL.(TL) = L/ 999 (0.00")

CSI: TC=0.82/1.00 (A-B:1) , BC=0.72/1.00 (M-N:1) , WB=0.55/1.00 (E-J:1) , SSI=0.70/1.00 (M-N:1)

DOL LUMBER=1.00 NAIL=1.00 LS BEND=1.00 COMP=1.00 SHEAR=1.00 TENS= 1.00

COMPANION LIVE LOAD FACTOR = 1.00

AUTOSOLVE HEELS OFF

A18082064

CONTINUED ON PAGE 2

HANGERS NOTES

1) SPECIAL HANGER(S) OR CONNECTION(S) REQUIRED TO SUPPORT CONCENTRATED LOAD(S) 334.0 lbs FACTORED DOWN AT 5-10-8 ON TOP CHORD, AND 1481.3 lbs FACTORED DOWN AT 9-1-7 ON BOTTOM CHORD. DESIGN FOR UNSPECIFIED CONNECTION(S) IS DELEGATED TO THE BUILDING DESIGNER.

TRUSS PLATE MANUFACTURER IS NOT RESPONSIBLE FOR QUALITY CONTROL IN THE TRUSS MANUFACTURING PLANT .

NAIL VALUES

PLATE	GRIP(DRY) (PSI)		SHEAR (PLI)		SECTION (PLI)	
	MAX	MIN	MAX	MIN	MAX	MIN
MT20	618	354	1667	788	1987	1656

PLATE PLACEMENT TOL. = 0.250 inches

PLATE ROTATION TOL. = 5.0 Deg.

JSI GRIP= 0.89 (O) (INPUT = 0.90)
JSI METAL= 0.54 (L) (INPUT = 1.00)

NOTE: Lateral brace(s) shown shall be 1x4 for Part 9 design as per OBC 9.23.13.11, and no less than 2x4 for Part 4 design.

LICENSED PROFESSIONAL ENGINEER
D. O'CONNOR
100009580
08/15/2018
PROVINCE OF ONTARIO

A18082064(2)

JOB NAME	TRUSS NAME	QUANTITY	PLY	JOB DESC.	DRWG NO.
300970	H36	2	1	TRUSS DESC.	JT# 45147

Alpa Roof Truss, Maple

Version 8.210 S Jun 13 2018 MiTek Industries, Inc. Wed Aug 15 14:11:03 2018 Page 1
ID:HSVaWIIDnhr?B6oeweH9vbyNdls-rkSOq3Yfgwz5HNccvpC2rWcx3XP3ESS2whf9TTynbL6

Scale = 1:55.1

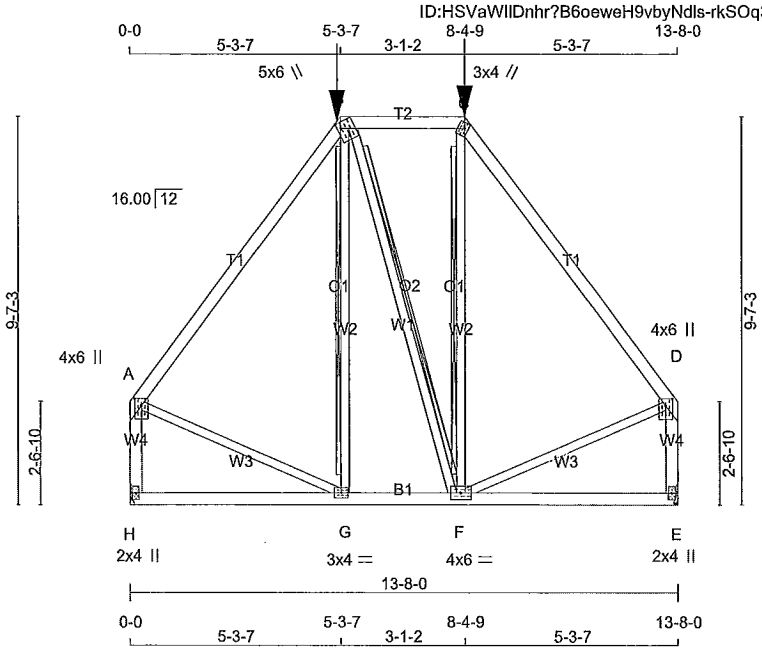

TOTAL WEIGHT = 2 X 76 = 152 lb

[M]

LUMBER

N. L. G. A. RULES

CHORDS	SIZE		LUMBER	DESCR.
A - B	2x4	DRY	No.2	SPF
B - C	2x4	DRY	No.2	SPF
C - D	2x4	DRY	No.2	SPF
H - A	2x4	DRY	No.2	SPF
E - D	2x4	DRY	No.2	SPF
H - E	2x4	DRY	No.2	SPF
ALL WEBS EXCEPT	2x3	DRY	No.2	SPF

DRY: SEASONED LUMBER.

PLATES (table is in inches)

JT	TYPE	PLATES	W	LEN	Y	X
A	TMVW+p	MT20	4.0	6.0	2.00	2.00
B	TTWW+m	MT20	5.0	6.0	1.75	1.00
C	TTW+m	MT20	3.0	4.0	1.75	1.00
D	TMVW+p	MT20	4.0	6.0	2.00	2.00
E	BMV1+p	MT20	2.0	4.0		
F	BMWWW-t	MT20	4.0	6.0		
G	BMWW-t	MT20	3.0	4.0		
H	BMV1+p	MT20	2.0	4.0		

HANGERS NOTES

1) SPECIAL HANGER(S) OR CONNECTION(S) REQUIRED TO SUPPORT CONCENTRATED LOAD(S) 236.1 lbs FACTORED DOWN AT 8-4-9, AND 236.1 lbs FACTORED DOWN AT 5-3-7 ON TOP CHORD. DESIGN FOR UNSPECIFIED CONNECTION(S) IS DELEGATED TO THE BUILDING DESIGNER.

NOTE: Lateral brace(s) shown shall be 1x4 for Part 9 design as per OBC 9.23.13.11, and no less than 2x4 for Part 4 design.

LICENSED PROFESSIONAL ENGINEER
D. O'CONNOR
100009580
08/15/2018
PROVINCE OF ONTARIO

DIMENSIONS, SUPPORTS AND LOADINGS SPECIFIED BY FABRICATOR TO BE VERIFIED BY BUILDING DESIGNER

BEARINGS

JT	FACTORED GROSS REACTION VERT	HORZ	MAXIMUM FACTORED GROSS REACTION DOWN	HORZ	UPLIFT	INPUT BRG IN-SX	REQRD BRG IN-SX
H	1077	0	1077	0	0	MECHANICAL	
E	1077	0	1077	0	0	MECHANICAL	

A SUITABLE HANGER/MECHANICAL CONNECTION IS REQUIRED AT JOINT H, E. MINIMUM BEARING LENGTH AT JOINT H = 1-8, JOINT E = 1-8.

UNFACTORED REACTIONS

JT	1ST LCASE COMBINED	MAX./MIN. COMPONENT REACTIONS SNOW	LIVE	PERM.LIVE	WIND	DEAD	SOIL
H	769	462 / 0	0 / 0	0 / 0	0 / 0	307 / 0	0 / 0
E	769	462 / 0	0 / 0	0 / 0	0 / 0	307 / 0	0 / 0

BRACING

TOP CHORD TO BE SHEATHED OR MAX. PURLIN SPACING = 6.18 FT.
MAX. UNBRACED BOTTOM CHORD LENGTH = 10.00 FT OR RIGID CEILING DIRECTLY APPLIED.

ALL PITCH BREAKS AND PERIMETER CORNER JOINTS MUST BE LATERALLY RESTRAINED.

2x4 DRY SPF No.2 T-BRACE AT B-G, B-F, C-F

FASTEN T AND I-BRACES TO NARROW EDGE OF WEB WITH ONE ROW PER PLY OF 3" COMMON WIRE NAILS @ 6" O.C. WITH 3" MINIMUM END DISTANCE. BRACE MUST COVER 90% OF WEB LENGTH.

END VERTICAL(S) MUST BE SHEATHED OR HAVE BRACES AS INDICATED IN THE MAX. UNBRACED LENGTH COLUMN OF THE TABLE BELOW

LOADING

TOTAL LOAD CASES: (4)

CHORDS

MEMB. FR-TO	MAX. FACTORED FORCE (LBS)	FACTORED VERT. LOAD (PLF) FROM	TO	LC1 MAX CSI (LC)	MAX. UNBRAC LENGTH
A- B	-765 / 0	-78.0	-78.0	0.49 (1)	6.18
B- C	-457 / 0	-135.2	-135.2	0.25 (1)	6.25
C- D	-765 / 0	-78.0	-78.0	0.49 (1)	6.18
H- A	-1003 / 0	0.0	0.0	0.15 (1)	7.78
E- D	-1003 / 0	0.0	0.0	0.15 (1)	7.78
H- G	0 / 0	-32.1	-32.1	0.22 (4)	10.00
G- F	0 / 457	-32.1	-32.1	0.24 (4)	10.00
F- E	0 / 0	-32.1	-32.1	0.21 (4)	10.00

WEBS

MEMB. FR-TO	MAX. FACTORED FORCE (LBS)	MAX CSI (LC)
G- B	-37 / 93	0.04 (4)
B- F	0 / 0	0.00 (1)
F- C	-38 / 94	0.04 (4)
A- G	0 / 493	0.12 (1)
F- D	0 / 493	0.12 (1)

FACTORED CONCENTRATED LOADS (LBS)

JT	LOC.	LC1	MAX-	MAX+	FACE	DIR.	TYPE
B	5-3-7	-236	-236	---	FRONT	VERT	TOTAL
C	8-4-9	-236	-236	---	FRONT	VERT	TOTAL

DESIGN CRITERIA

SPECIFIED LOADS:

TOP CH.	LL	=	21.0	PSF
	DL	=	6.0	PSF
BOT CH.	LL	=	0.0	PSF
	DL	=	7.4	PSF
TOTAL LOAD		=	34.4	PSF

SPACING = 24.0 IN. C/C

LOADING IN FLAT SECTION BASED ON A SLOPE OF 2.00/12 MINIMUM

GIRDER TYPE: CPrimeHip
SIDE SETBACK = 5-3-7
END SETBACK = 4-11-4
END WALL WIDTH = 0-0
CORNER FRAMING TYPE: CONVENTIONAL
END JACK TYPE: CONVENTIONAL
APPLIED TO FRONT SIDE
- ADDT'L LOADS BASED ON 55 % OF GSL.

THIS TRUSS IS DESIGNED FOR RESIDENTIAL OR SMALL BUILDING REQUIREMENTS OF PART 9, NBCC 2010, NBCC 2015

THIS DESIGN COMPLIES WITH:
- PART 9 OF OBC 2012, OBC 2018
- CSA 086-09, CSA 086-14
- TPIC 2011, TPIC 2014

(55 % OF 23.0 P.S.F. G.S.L. PLUS 8.4 P.S.F. RAIN LOAD) EQUALS 21.0 P.S.F. SPECIFIED ROOF LIVE LOAD

ALLOWABLE DEFL.(LL)= L/360 (0.46")
CALCULATED VERT. DEFL.(LL) = L/ 999 (0.01")
ALLOWABLE DEFL.(TL)= L/360 (0.46")
CALCULATED VERT. DEFL.(TL) = L/ 999 (0.05")

CSI: TC=0.49/1.00 (A-B:1) , BC=0.24/1.00 (F-G:4) , WB=0.12/1.00 (A-G:1) , SSI=0.18/1.00 (B-C:1)

DOL LUMBER=1.00 NAIL=1.00 LS BEND=1.00 COMP=1.00 SHEAR=1.00 TENS= 1.00

COMPANION LIVE LOAD FACTOR = 1.00

TRUSS PLATE MANUFACTURER IS NOT RESPONSIBLE FOR QUALITY CONTROL IN THE TRUSS MANUFACTURING PLANT .

NAIL VALUES

PLATE	GRIP(DRY) (PSI) MAX	MIN	SHEAR (PLI) MAX	MIN	SECTION (PLI) MAX	MIN
MT20	618	354	1667	788	1987	1656

PLATE PLACEMENT TOL. = 0.250 inches

PLATE ROTATION TOL. = 5.0 Deg.

JSI GRIP= 0.72 (G) (INPUT = 0.90)
JSI METAL= 0.29 (A) (INPUT = 1.00)

A18082065

JOB NAME	TRUSS NAME	QUANTITY	PLY	JOB DESC.	DRWG NO.
292655	H1	1	1	TRUSS DESC.	

Alpa Roof Truss, Maple

Version 8.200 S Jan 6 2018 MiTek Industries, Inc. Sun Feb 18 14:12:28 2018 Page 1

ID:HSVaWlIDnhr?B6oeweH9vbyNdls-nFJaliCHin5qDyZQp8A0Afh_qB76l?y8Rosm5WzjubX

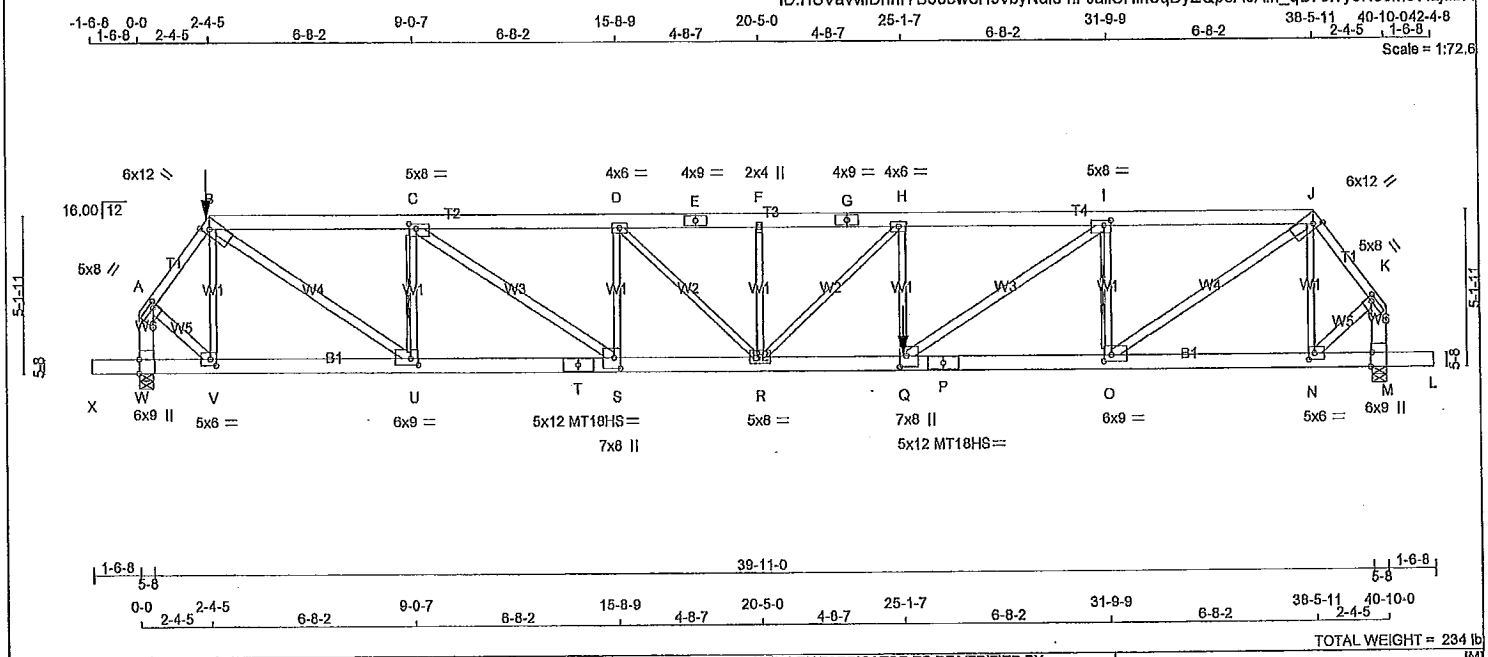

TOTAL WEIGHT = 234 lb

[M]

LUMBER
N. L. G. A. RULES

CHORDS	SIZE		LUMBER	DESCR.
A - B	2x4	DRY	No.2	SPF
B - E	2x6	DRY	1650F 1.5E	SPF
E - G	2x6	DRY	1650F 1.5E	SPF
G - J	2x6	DRY	1650F 1.5E	SPF
J - K	2x4	DRY	No.2	SPF
W - A	2x6	DRY	No.2	SPF
M - K	2x6	DRY	No.2	SPF
X - T	2x6	DRY	2100F 1.8E	SPF
T - P	2x6	DRY	2100F 1.8E	SPF
P - L	2x6	DRY	2100F 1.8E	SPF
ALL WEBS	2x3	DRY	No.2	SPF
EXCEPT				
B - U	2x4	DRY	No.2	SPF
C - S	2x4	DRY	No.2	SPF
Q - I	2x4	DRY	No.2	SPF
O - J	2x4	DRY	No.2	SPF
A - V	2x4	DRY	No.2	SPF
N - K	2x4	DRY	No.2	SPF

DRY: SEASONED LUMBER.

PLATES (table is in inches)

JT	TYPE	PLATES	W	LEN	Y	X
A	TMVW-t	MT20	5.0	8.0	1.75	2.00
B	TTWW+h	MT20	6.0	12.0	3.25	2.00
C	TMWW-t	MT20	5.0	8.0	2.00	2.75
D	TMWW-t	MT20	4.0	8.0		
E	TS-t	MT20	4.0	9.0		
F	TMW+w	MT20	2.0	4.0		
G	TS-t	MT20	4.0	9.0		
H	TMWW-t	MT20	4.0	8.0		
I	TMWW-t	MT20	5.0	8.0	2.00	2.75
J	TTWW+h	MT20	6.0	12.0	3.25	2.00
K	TMVW-t	MT20	5.0	8.0	1.75	2.00
M	BMV1+t	MT20	6.0	9.0	Edge	0.50
N	BMWW-t	MT20	5.0	6.0	2.50	2.25
O	BMWW-t	MT20	6.0	9.0	2.50	3.00
P	BS-t	MT18HS	5.0	12.0		
Q	BMWW+t	MT20	7.0	8.0	4.25	2.50
R	BMWWW-t	MT20	5.0	8.0		

REGISTERED PROFESSIONAL ENGINEER
E. FOK
PROVINCE OF ONTARIO

DIMENSIONS, SUPPORTS AND LOADINGS SPECIFIED BY FABRICATOR TO BE VERIFIED BY BUILDING DESIGNER

BEARINGS

JT	FACTORED GROSS REACTION VERT	HORZ	MAXIMUM FACTORED GROSS REACTION DOWN	HORZ	UPLIFT	INPUT BRG IN-SX	REQRD BRG IN-SX
W	4381	0	4381	0	0	5-8	5-8
M	3937	0	3937	0	0	5-8	4-11

UNFACTORED REACTIONS

JT	1ST LCASE COMBINED	SNOW	MAX./MIN. COMPONENT REACTIONS LIVE	PERM.LIVE	WIND	DEAD	SOIL
W	3112	1964 / 0	0 / 0	0 / 0	0 / 0	1148 / 0	0 / 0
M	2787	1813 / 0	0 / 0	0 / 0	0 / 0	973 / 0	0 / 0

BEARING MATERIAL TO BE SPF NO.2 OR BETTER AT JOINT(S) W, M
BEARING SIZE FACTOR = 1.15 AT JNT(S) W, M (BASED ON SUPPORT DEPTH = 1-8)

BRACING
TOP CHORD TO BE SHEATHED OR MAX. PURLIN SPACING = 2.84 FT.
MAX. UNBRACED BOTTOM CHORD LENGTH = 10.00 FT OR RIGID CEILING DIRECTLY APPLIED.

ALL PITCH BREAKS AND PERIMETER CORNER JOINTS MUST BE LATERALLY RESTRAINED.

2x4 DRY SPF No.2 T-BRACE AT C-U, I-O

FASTEN T AND I-BRACES TO NARROW EDGE OF WEB WITH ONE ROW PER PLY OF 3" COMMON WIRE NAILS @ 6" O.C. WITH 3" MINIMUM END DISTANCE. BRACE MUST COVER 90% OF WEB LENGTH.

END VERTICAL(S) MUST BE SHEATHED OR HAVE BRACES AS INDICATED IN THE MAX. UNBRACED LENGTH COLUMN OF THE TABLE BELOW.

LOADING
TOTAL LOAD CASES: (4)

CHORDS

MEMB. FR-TO	MAX. FACTORED FORCE (LBS)	FACTORED VERT. LOAD (PLF) FROM	TO	LC1	MAX CSI (LC)	MAX. UNBRAC LENGTH
A- B	-3568 / 0	-78.0	-78.0	0.27 (1)	3.50	
B- C	-6769 / 0	-153.5	-153.5	0.54 (1)	3.46	
C- D	-9437 / 0	-153.5	-153.5	0.71 (1)	2.84	
D- E	-10229 / 0	-153.5	-153.5	0.50 (1)	2.92	
E- F	-10229 / 0	-153.5	-153.5	0.50 (1)	2.92	
F- G	-10229 / 0	-153.5	-153.5	0.48 (1)	2.94	
G- H	-10229 / 0	-153.5	-153.5	0.48 (1)	2.94	
H- I	-10172 / 0	-78.0	-78.0	0.54 (1)	2.94	
I- J	-6535 / 0	-78.0	-78.0	0.32 (1)	3.76	
J- K	-3189 / 0	-78.0	-78.0	0.23 (1)	3.72	
W- A	-4270 / 0	0.0	0.0	0.34 (1)	5.16	
M- K	-3826 / 0	0.0	0.0	0.31 (1)	5.42	
X- W	0 / 0	-96.5	-96.5	0.05 (1)	10.00	
W- V	0 / 0	-36.4	-36.4	0.09 (4)	10.00	
V- U	0 / 2114	-36.4	-36.4	0.19 (1)	10.00	
U- T	0 / 6769	-36.4	-36.4	0.43 (1)	10.00	
T- S	0 / 6769	-36.4	-36.4	0.43 (1)	10.00	
S- R	0 / 9437	-36.4	-36.4	0.55 (1)	10.00	
R- Q	0 / 10172	-36.4	-36.4	0.61 (1)	10.00	
Q- P	0 / 6535	-18.5	-18.5	0.41 (1)	10.00	
P- O	0 / 6535	-18.5	-18.5	0.41 (1)	10.00	
O- N	0 / 1888	-18.5	-18.5	0.16 (1)	10.00	
N- M	0 / 0	-18.5	-18.5	0.06 (1)	10.00	
M- L	0 / 0	-96.5	-96.5	0.05 (1)	10.00	

WEBS

MEMB. FR-TO	MAX. FACTORED FORCE (LBS)	MAX CSI (LC)
V- B	-1050 / 0	0.37 (1)
B- U	0 / 5663	1.00 (1)
U- C	-3039 / 0	0.64 (1)
C- S	0 / 3258	0.58 (1)
S- D	-1648 / 0	0.58 (1)
D- R	0 / 1119	0.28 (1)
R- F	-687 / 0	0.24 (1)
R- H	0 / 173	0.07 (4)
Q- H	-652 / 0	0.23 (1)
Q- I	0 / 4443	0.79 (1)
O- I	-3134 / 0	0.66 (1)
O- J	0 / 5673	1.00 (1)
N- J	-1015 / 0	0.36 (1)
A- V	0 / 2513	0.44 (1)
N- K	0 / 2246	0.40 (1)

FACTORED CONCENTRATED LOADS (LBS)

JT	LOC.	LC1	MAX-	MAX+	FACE	DIR.	TYPE
B	2-4-5	-134	-134	---	FRONT	VERT	TOTAL
Q	25-1-8	-1778	-1778	---	FRONT	VERT	TOTAL

DESIGN CRITERIA

*** SPECIAL LOADS ANALYSIS ***
GEOMETRY AND/OR BASIC LOADS CHANGED BY USER.
LOADS WERE DERIVED FROM USER INPUT
NO FURTHER MODIFICATIONS WERE MADE

SPECIFIED LOADS:

TOP CH.	LL	=	21.0	PSF
	DL	=	6.0	PSF
BOT CH.	LL	=	0.0	PSF
	DL	=	7.4	PSF
TOTAL LOAD		=	34.4	PSF

SPACING = 24.0 IN. C/C

LOADING IN FLAT SECTION BASED ON A SLOPE OF 2.00/12 MINIMUM

GIRDER TYPE: CPrimeHip
SIDE SETBACK = 2-4-6
END SETBACK = 5-10-8
END WALL WIDTH = 0-0
CORNER FRAMING TYPE: CONVENTIONAL
END JACK TYPE: CONVENTIONAL
APPLIED TO FRONT SIDE
- ADDT'L LOADS BASED ON 55 % OF GSL.
LOADS APPLIED TO FIRST 25-1-8 OF SPAN MEASURED FROM THE LEFT.

*** NON STANDARD GIRDER ***
ADDT'L USER-DEFINED LOADS APPLIED TO ALL LOAD CASES.

THIS TRUSS IS DESIGNED FOR RESIDENTIAL OR SMALL BUILDING REQUIREMENTS OF PART 9, NBCC 2010, NBCC 2015

THIS DESIGN COMPLIES WITH:
- PART 9 OF OBC 2012, OBC 2018
- CSA 086-09, CSA 086-14
- TPIC 2011, TPIC 2014

(55 % OF 23.0 P.S.F. G.S.L. PLUS 8.4 P.S.F. RAIN LOAD) EQUALS 21.0 P.S.F. SPECIFIED ROOF LIVE LOAD

ALLOWABLE DEFL.(LL)= L/360 (1.36")
CALCULATED VERT. DEFL.(LL) = L/ 999 (0.47")
ALLOWABLE DEFL.(TL)= L/360 (1.36")
CALCULATED VERT. DEFL.(TL) = L/ 555 (0.88")

CANTILEVER DEFLECTION:
ALLOWABLE DEFL.(LL)= L/120 (0.19")
CALCULATED VERT. DEFL.(LL) = L/ 999 (0.00")
ALLOWABLE DEFL.(TL)= L/120 (0.19")
CALCULATED VERT. DEFL.(TL) = L/ 999 (0.00")

CSI: TC=0.71/1.00 (C-D:1) , BC=0.61/1.00 (Q-R:1) , WB=1.00/1.00 (B-U:1) , SSI=0.41/1.00 (B-C:1)

DOL LUMBER=1.00 NAIL=1.00 LS BEND=1.00 COMP=1.00 SHEAR=1.00 TENS= 1.00

COMPANION LIVE LOAD FACTOR = 1.00

AUTOSOLVE HEELS OFF

A-18023696

CONTINUED ON PAGE 2

JOB NAME	TRUSS NAME	QUANTITY	PLY	JOB DESC.	DRWG NO.
292655	H1	1	1	TRUSS DESC.	

Alpa Roof Truss, Maple

Version 8.200 S Jan 6 2018 MiTek Industries, Inc. Sun Feb 18 14:12:28 2018 Page 2
ID:HSVaWlDnhr?B6oeweH9vbyNdls-nFJalICHIn5qDyZQp8A0Afh_gB76I?y8Rosm5WzjubX

PLATES (table is in inches)

JT	TYPE	PLATES	W	LEN	Y	X
S	BMWW+t	MT20	7.0	8.0	4.25	2.50
T	BS-t	MT18HS	5.0	12.0		
U	BMWW-t	MT20	6.0	9.0	2.50	3.00
V	BMWW-t	MT20	5.0	6.0	2.50	2.25
W	BMV1+t	MT20	6.0	9.0	Edge	

Edge - INDICATES REFERENCE CORNER OF PLATE TOUCHES EDGE OF CHORD.

HANGERS NOTES

1) SPECIAL HANGER(S) OR CONNECTION(S) REQUIRED TO SUPPORT CONCENTRATED LOAD(S) 134.1 lbs FACTORED DOWN AT 2-4-5 ON TOP CHORD, AND 1777.8 lbs FACTORED DOWN AT 25-1-8 ON BOTTOM CHORD. DESIGN FOR UNSPECIFIED CONNECTION(S) IS DELEGATED TO THE BUILDING DESIGNER.

TRUSS PLATE MANUFACTURER IS NOT RESPONSIBLE FOR QUALITY CONTROL IN THE TRUSS MANUFACTURING PLANT.

NAIL VALUES

PLATE	GRIP(DRY) (PSI) MAX	MIN	SHEAR (PLI) MAX	MIN	SECTION (PLI) MAX	MIN
MT20	618	354	1667	788	1987	1656
MT18HS	511	354	2455	1382	3004	2010

PLATE PLACEMENT TOL. = 0.250 inches

PLATE ROTATION TOL. = 5.0 Deg.

JSI GRIP= 0.88 (O) (INPUT = 0.90)
JSI METAL= 0.94 (Q) (INPUT = 1.00)

REGISTERED PROFESSIONAL ENGINEER
FEB 18 18
E. FOK
PROVINCE OF ONTARIO

A-180268660

JOB NAME	TRUSS NAME	QUANTITY	PLY	JOB DESC.	DRWG NO.
292655	H2	2	1	TRUSS DESC.	

Alpa Roof Truss, Maple

Version 8.200 S Jan 6 2018 MiTek Industries, Inc. Sun Feb 18 12:15:31 2018 Page 1

ID:HSVaWlIDnhr?B6oeweH9vbyNdls-klqs1MHmDo1SubdpFxnVHwZnRbEIiVYltbazJkzjwJA

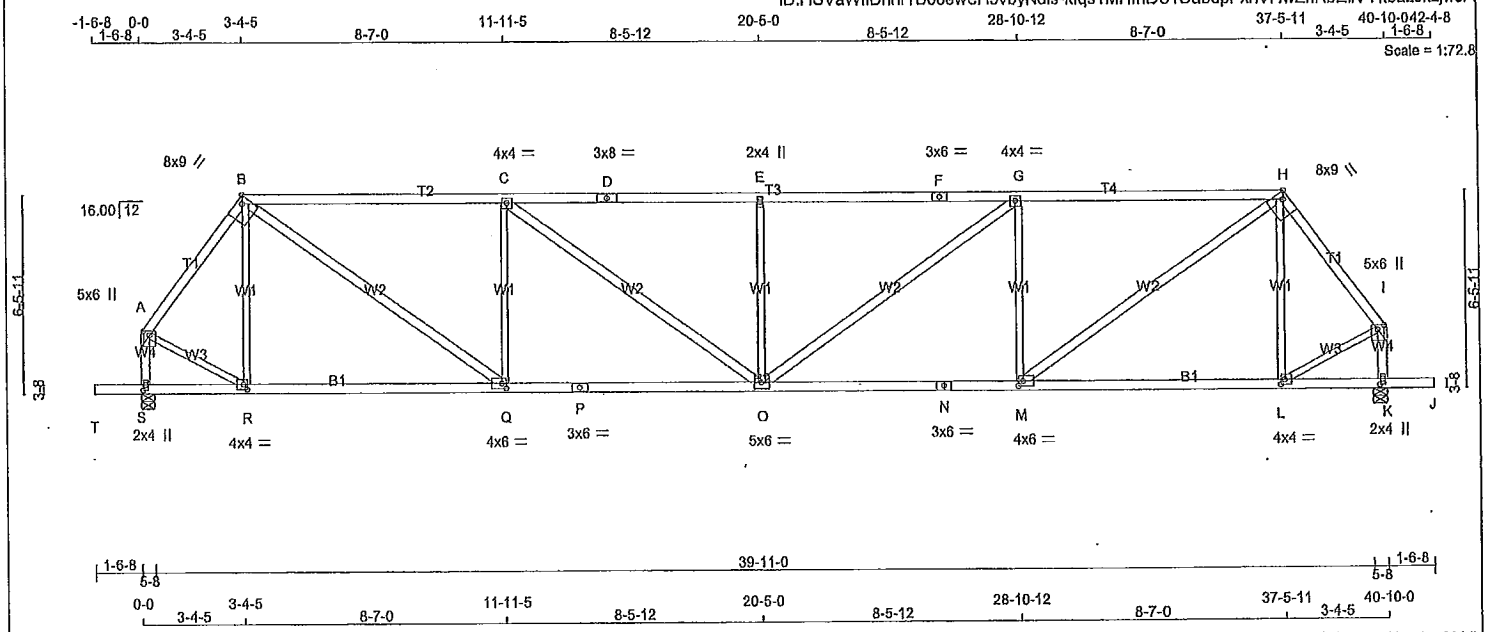

TOTAL WEIGHT = 2 X 182 = 364 lb

[M]

LUMBER

N. L. G. A. RULES

CHORDS	SIZE		LUMBER	DESCR.
A - B	2x4	DRY	No.2	SPF
B - D	2x4	DRY	2100F 1.8E	SPF
D - F	2x4	DRY	2100F 1.8E	SPF
F - H	2x4	DRY	2100F 1.8E	SPF
H - I	2x4	DRY	No.2	SPF
S - A	2x4	DRY	No.2	SPF
K - I	2x4	DRY	No.2	SPF
T - P	2x4	DRY	No.2	SPF
P - N	2x4	DRY	No.2	SPF
N - J	2x4	DRY	No.2	SPF
ALL WEBS EXCEPT	2x3	DRY	No.2	SPF
B - Q	2x4	DRY	No.2	SPF
C - O	2x4	DRY	No.2	SPF
O - G	2x4	DRY	No.2	SPF
M - H	2x4	DRY	No.2	SPF

DRY: SEASONED LUMBER.

PLATES (table is in inches)

JT	TYPE	PLATES	W	LEN	Y	X
A	TMWW+p	MT20	5.0	6.0	1.75	2.50
B	TTWW-h	MT20	8.0	9.0	Edge	2.75
C	TMWW-t	MT20	4.0	4.0		
D	TS-t	MT20	3.0	8.0		
E	TMW+w	MT20	2.0	4.0		
F	TS-t	MT20	3.0	6.0		
G	TMWW-t	MT20	4.0	4.0		
H	TTWW-h	MT20	8.0	9.0	Edge	2.75
I	TMVW+p	MT20	5.0	6.0	1.75	2.50
K	BMV1+p	MT20	2.0	4.0	2.25	1.00
L	BMWW-t	MT20	4.0	4.0	2.00	1.50
M	BMWW-t	MT20	4.0	6.0	2.00	1.75
N	BS-t	MT20	3.0	6.0		
O	BMWWW-t	MT20	5.0	6.0		
P	BS-t	MT20	3.0	6.0		
Q	BMWW-t	MT20	4.0	6.0	2.00	1.75
R	BMWW-t	MT20	4.0	4.0	2.00	1.50
S	BMV1+p	MT20	2.0	4.0	2.25	1.00

NOTE: Lateral brace(s) shown shall be 1x4 for Part 9 design as per OBC 9.23.13.11, and no less than 2x4 for Part 4 design

REGISTERED PROFESSIONAL ENGINEER
02/18/2018
EDWIN C. FOK
PROVINCE OF ONTARIO

DIMENSIONS, SUPPORTS AND LOADINGS SPECIFIED BY FABRICATOR TO BE VERIFIED BY BUILDING DESIGNER

BEARINGS

JT	FACTORED GROSS REACTION VERT	HORZ	MAXIMUM FACTORED GROSS REACTION DOWN	HORZ	UPLIFT	INPUT BRG IN-SX	REQRD BRG IN-SX
S	2118	0	2118	0	0	5-8	3-3
K	2118	0	2118	0	0	5-8	3-3

UNFACTORED REACTIONS

JT	1ST LCASE COMBINED	MAX./MIN. COMPONENT REACTIONS SNOW	LIVE	PERM.LIVE	WIND	DEAD	SOIL
S	1510	922 / 0	0 / 0	0 / 0	0 / 0	588 / 0	0 / 0
K	1510	922 / 0	0 / 0	0 / 0	0 / 0	588 / 0	0 / 0

BEARING MATERIAL TO BE SPF NO.2 OR BETTER AT JOINT(S) S, K

BRACING

TOP CHORD TO BE SHEATHED OR MAX. PURLIN SPACING = 3.86 FT.
MAX. UNBRACED BOTTOM CHORD LENGTH = 10.00 FT OR RIGID CEILING DIRECTLY APPLIED.

ALL PITCH BREAKS AND PERIMETER CORNER JOINTS MUST BE LATERALLY RESTRAINED.

LOADING

TOTAL LOAD CASES: (4)

CHORDS MEMB. FR-TO	MAX. FACTORED FORCE (LBS)	FACTORED VERT. LOAD (PLF) FROM	TO	LC1 MAX CSI (LC)	MAX. UNBRAC LENGTH
A- B	-1697 / 0	-78.0	-78.0	0.21 (1)	4.92
B- C	-2805 / 0	-78.0	-78.0	0.83 (1)	4.19
C- D	-3330 / 0	-78.0	-78.0	0.91 (1)	3.86
D- E	-3330 / 0	-78.0	-78.0	0.91 (1)	3.86
E- F	-3330 / 0	-78.0	-78.0	0.91 (1)	3.86
F- G	-3330 / 0	-78.0	-78.0	0.91 (1)	3.86
G- H	-2805 / 0	-78.0	-78.0	0.83 (1)	4.19
H- I	-1697 / 0	-78.0	-78.0	0.21 (1)	4.92
S- A	-1963 / 0	0.0	0.0	0.23 (1)	6.01
K- I	-1963 / 0	0.0	0.0	0.23 (1)	6.01
T- S	0 / 0	-96.5	-96.5	0.16 (1)	10.00
S- R	0 / 0	-18.5	-18.5	0.20 (4)	10.00
R- Q	0 / 1005	-18.5	-18.5	0.37 (4)	10.00
Q- P	0 / 2806	-18.5	-18.5	0.60 (1)	10.00
P- O	0 / 2806	-18.5	-18.5	0.60 (1)	10.00
O- N	0 / 2806	-18.5	-18.5	0.60 (1)	10.00
N- M	0 / 2806	-18.5	-18.5	0.60 (1)	10.00
M- L	0 / 1005	-18.5	-18.5	0.37 (4)	10.00
L- K	0 / 0	-18.5	-18.5	0.20 (4)	10.00
K- J	0 / 0	-96.5	-96.5	0.16 (1)	10.00

WEBS MEMB. FR-TO	MAX. FACTORED FORCE (LBS)	MAX CSI (LC)
R- B	-336 / 0	0.23 (1)
B- Q	0 / 2213	0.36 (1)
Q- C	-1126 / 0	0.77 (1)
C- O	0 / 649	0.10 (1)
O- E	-611 / 0	0.42 (1)
O- G	0 / 649	0.10 (1)
M- G	-1126 / 0	0.77 (1)
M- H	0 / 2213	0.36 (1)
L- H	-336 / 0	0.23 (1)
A- R	0 / 1115	0.25 (1)
L- I	0 / 1115	0.25 (1)

DESIGN CRITERIA

SPECIFIED LOADS:

TOP CH.	LL	=	21.0	PSF
	DL	=	6.0	PSF
BOT CH.	LL	=	0.0	PSF
	DL	=	7.4	PSF
TOTAL LOAD		=	34.4	PSF

SPACING = 24.0 IN. C/C

LOADING IN FLAT SECTION BASED ON A SLOPE OF 2.00/12 MINIMUM

THIS TRUSS IS DESIGNED FOR RESIDENTIAL OR SMALL BUILDING REQUIREMENTS OF PART 9, NBCC 2010, NBCC 2015

THIS DESIGN COMPLIES WITH:
- PART 9 OF OBC 2012, OBC 2018
- CSA 086-09, CSA 086-14
- TPIC 2011, TPIC 2014

(55 % OF 23.0 P.S.F. G.S.L. PLUS 8.4 P.S.F. RAIN LOAD) EQUALS 21.0 P.S.F. SPECIFIED ROOF LIVE LOAD

ALLOWABLE DEFL.(LL)= L/360 (1.36")
CALCULATED VERT. DEFL.(LL) = L/ 999 (0.17")
ALLOWABLE DEFL.(TL)= L/360 (1.36")
CALCULATED VERT. DEFL.(TL) = L/ 999 (0.36")

CANTILEVER DEFLECTION:
ALLOWABLE DEFL.(LL)= L/120 (0.19")
CALCULATED VERT. DEFL.(LL) = L/ 999 (0.01")
ALLOWABLE DEFL.(TL)= L/120 (0.19")
CALCULATED VERT. DEFL.(TL) = L/ 999 (0.01")

CSI: TC=0.91/1.00 (E-G:1) , BC=0.60/1.00 (O-Q:1) , WB=0.77/1.00 (C-Q:1) , SSI=0.32/1.00 (B-C:1)

DOL LUMBER=1.00 NAIL=1.00 LS BEND=1.10 COMP=1.10 SHEAR=1.10 TENS= 1.10

COMPANION LIVE LOAD FACTOR = 1.00

TRUSS PLATE MANUFACTURER IS NOT RESPONSIBLE FOR QUALITY CONTROL IN THE TRUSS MANUFACTURING PLANT .

NAIL VALUES

PLATE	GRIP(DRY) (PSI) MAX	MIN	SHEAR (PLI) MAX	MIN	SECTION (PLI) MAX	MIN
MT20	618	354	1667	788	1987	1656

PLATE PLACEMENT TOL. = 0.250 Inches

PLATE ROTATION TOL. = 5.0 Deg.

JSI GRIP= 0.90 (A) (INPUT = 0.90)
JSI METAL= 0.88 (N) (INPUT = 1.00)

A-18023697

CONTINUED ON PAGE 2

JOB NAME	TRUSS NAME	QUANTITY	PLY	JOB DESC.	DRWG NO.
292655	H3	2	1	TRUSS DESC.	

Alpa Roof Truss, Maple

Version 8.200 S Jan 6 2018 MiTek Industries, Inc. Sun Feb 18 12:15:51 2018 Page 1

ID:HSVaWIIDnhr?B6oeweH9vbyNdls-881QEBWJWyYcHg9fQ88B58OC6f5kOZGFTlQ0?azjwls

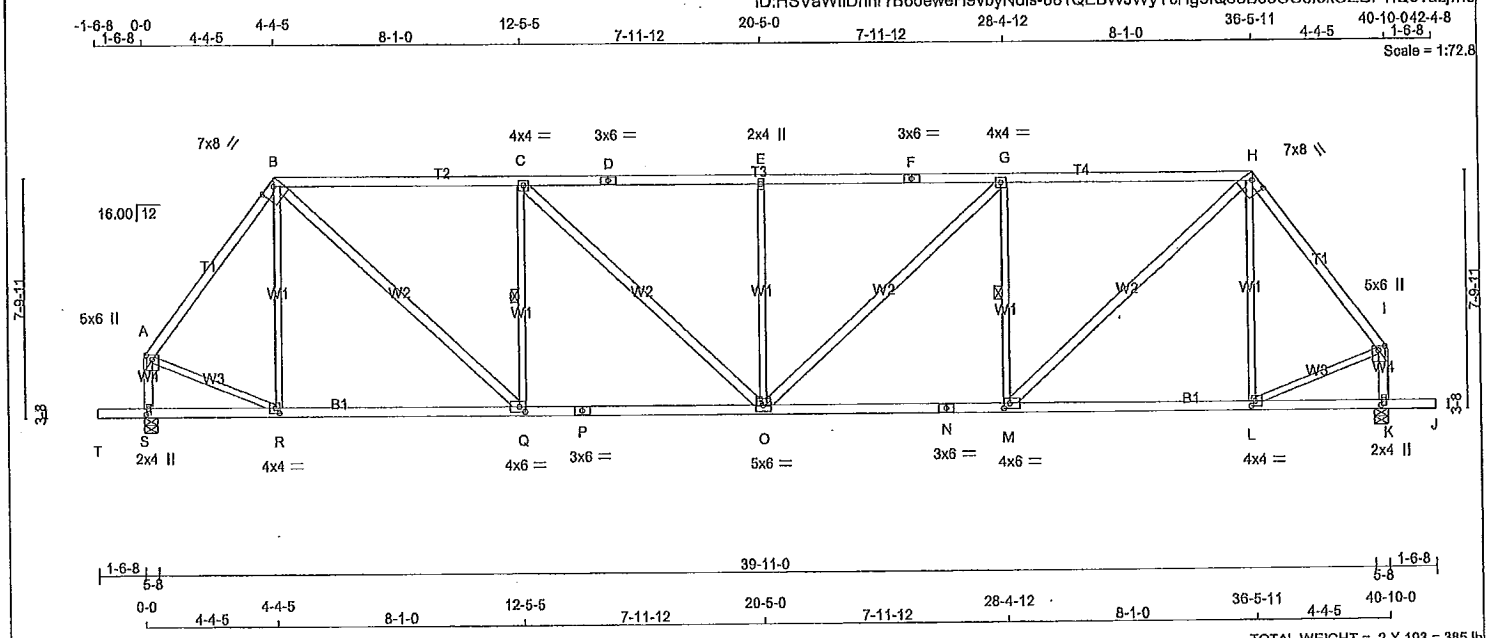

TOTAL WEIGHT = 2 X 193 = 385 lb

[M]

LUMBER

N. L. G. A. RULES

CHORDS	SIZE		LUMBER	DESCR.
A - B	2x4	DRY	No.2	SPF
B - D	2x4	DRY	1650F 1.5E	SPF
D - F	2x4	DRY	1650F 1.5E	SPF
F - H	2x4	DRY	1650F 1.5E	SPF
H - I	2x4	DRY	No.2	SPF
S - A	2x4	DRY	No.2	SPF
K - I	2x4	DRY	No.2	SPF
T - P	2x4	DRY	No.2	SPF
P - N	2x4	DRY	No.2	SPF
N - J	2x4	DRY	No.2	SPF
ALL WEBS EXCEPT	2x3	DRY	No.2	SPF
B - Q	2x4	DRY	No.2	SPF
C - O	2x4	DRY	No.2	SPF
O - G	2x4	DRY	No.2	SPF
M - H	2x4	DRY	No.2	SPF

DRY: SEASONED LUMBER.

PLATES (table is in inches)

JT	TYPE	PLATES	W	LEN	Y	X
A	TMVW+p	MT20	5.0	6.0	1.75	2.50
B	TTWW-h	MT20	7.0	8.0	1.75	5.00
C	TMWW-t	MT20	4.0	4.0		
D	TS-t	MT20	3.0	6.0		
E	TMW+w	MT20	2.0	4.0		
F	TS-t	MT20	3.0	6.0		
G	TMWW-t	MT20	4.0	4.0		
H	TTWW-h	MT20	7.0	8.0	1.76	5.00
I	TMVW+p	MT20	5.0	6.0	1.75	2.50
K	BMV1+p	MT20	2.0	4.0	2.25	1.00
L	BMWW-t	MT20	4.0	4.0	2.00	1.50
M	BMWW-t	MT20	4.0	6.0	2.00	2.25
N	BS-t	MT20	3.0	6.0		
O	BMWWW-t	MT20	5.0	6.0		
P	BS-t	MT20	3.0	6.0		
Q	BMWW-t	MT20	4.0	6.0	2.00	2.25
R	BMWW-t	MT20	4.0	4.0	2.00	1.50
S	BMV1+p	MT20	2.0	4.0	2.25	1.00

NOTE: Lateral brace(s) shown shall be 1x4 for Part 9 design as per OBC 9.23.13.11, and no less than 2x4 for Part 4 design

REGISTERED PROFESSIONAL ENGINEER
02/18/2018
EDWIN C. FOK
PROVINCE OF ONTARIO

DIMENSIONS, SUPPORTS AND LOADINGS SPECIFIED BY FABRICATOR TO BE VERIFIED BY BUILDING DESIGNER

BEARINGS

JT	FACTORED GROSS REACTION VERT	HORZ	MAXIMUM FACTORED GROSS REACTION DOWN	HORZ	UPLIFT	INPUT BRG IN-SX	REQRD BRG IN-SX
S	2118	0	2118	0	0	5-8	3-3
K	2118	0	2118	0	0	5-8	3-3

UNFACTORED REACTIONS

JT	1ST LCASE COMBINED	MAX./MIN. COMPONENT REACTIONS SNOW	LIVE	PERM.LIVE	WIND	DEAD	SOIL
S	1510	922 / 0	0 / 0	0 / 0	0 / 0	588 / 0	0 / 0
K	1510	922 / 0	0 / 0	0 / 0	0 / 0	588 / 0	0 / 0

BEARING MATERIAL TO BE SPF NO.2 OR BETTER AT JOINT(S) S, K

BRACING

TOP CHORD TO BE SHEATHED OR MAX. PURLIN SPACING = 3.76 FT.
MAX. UNBRACED BOTTOM CHORD LENGTH = 10.00 FT OR RIGID CEILING DIRECTLY APPLIED.

ALL PITCH BREAKS AND PERIMETER CORNER JOINTS MUST BE LATERALLY RESTRAINED.

1 LATERAL BRACE(S) AT 1/ 2 LENGTH OF C-Q, G-M.

END VERTICAL(S) MUST BE SHEATHED OR HAVE BRACES AS INDICATED IN THE MAX. UNBRACED LENGTH COLUMN OF THE TABLE BELOW

LOADING

TOTAL LOAD CASES: (4)

CHORDS

MEMB. FR-TO	MAX. FACTORED FORCE (LBS)	FACTORED VERT. LOAD (PLF) FROM	TO	LC1 CSI (LC)	MAX UNBRAC LENGTH
A- B	-1746 / 0	-78.0	-78.0	0.38 (1)	4.71
B- C	-2350 / 0	-78.0	-78.0	0.87 (1)	4.03
C- D	-2732 / 0	-78.0	-78.0	0.93 (1)	3.76
D- E	-2732 / 0	-78.0	-78.0	0.93 (1)	3.76
E- F	-2732 / 0	-78.0	-78.0	0.93 (1)	3.76
F- G	-2732 / 0	-78.0	-78.0	0.93 (1)	3.76
G- H	-2350 / 0	-78.0	-78.0	0.87 (1)	4.03
H- I	-1746 / 0	-78.0	-78.0	0.38 (1)	4.71
S- A	-1946 / 0	0.0	0.0	0.22 (1)	6.03
K- I	-1946 / 0	0.0	0.0	0.22 (1)	6.03
T- S	0 / 0	-96.5	-96.5	0.16 (1)	10.00
S- R	0 / 0	-18.5	-18.5	0.18 (4)	10.00
R- Q	0 / 1038	-18.5	-18.5	0.34 (4)	10.00
Q- P	0 / 2351	-18.5	-18.5	0.51 (1)	10.00
P- O	0 / 2351	-18.5	-18.5	0.51 (1)	10.00
O- N	0 / 2351	-18.5	-18.5	0.51 (1)	10.00
N- M	0 / 2351	-18.5	-18.5	0.51 (1)	10.00
M- L	0 / 1038	-18.5	-18.5	0.34 (4)	10.00
L- K	0 / 0	-18.5	-18.5	0.18 (4)	10.00
K- J	0 / 0	-96.5	-96.5	0.16 (1)	10.00

WEBS

MEMB. FR-TO	MAX. FACTORED FORCE (LBS)	MAX CSI (LC)
R- B	-245 / 0	0.28 (1)
B- Q	0 / 1787	0.29 (1)
Q- C	-1061 / 0	0.41 (1)
C- O	0 / 524	0.08 (1)
O- E	-574 / 0	0.65 (1)
O- G	0 / 524	0.08 (1)
M- G	-1061 / 0	0.41 (1)
M- H	0 / 1787	0.29 (1)
L- H	-245 / 0	0.28 (1)
A- R	0 / 1107	0.25 (1)
L- I	0 / 1107	0.25 (1)

DESIGN CRITERIA

SPECIFIED LOADS:

TOP CH.	LL	=	21.0	PSF
	DL	=	6.0	PSF
BOT CH.	LL	=	0.0	PSF
	DL	=	7.4	PSF
TOTAL LOAD		=	34.4	PSF

SPACING = 24.0 IN. C/C

LOADING IN FLAT SECTION BASED ON A SLOPE OF 2.00/12 MINIMUM

THIS TRUSS IS DESIGNED FOR RESIDENTIAL OR SMALL BUILDING REQUIREMENTS OF PART 9, NBCC 2010, NBCC 2015

THIS DESIGN COMPLIES WITH:
- PART 9 OF OBC 2012, OBC 2018
- CSA 086-09, CSA 086-14
- TPIC 2011, TPIC 2014

(55 % OF 23.0 P.S.F. G.S.L. PLUS 8.4 P.S.F. RAIN LOAD) EQUALS 21.0 P.S.F. SPECIFIED ROOF LIVE LOAD

ALLOWABLE DEFL.(LL)= L/360 (1.36")
CALCULATED VERT. DEFL.(LL) = L/ 999 (0.14")
ALLOWABLE DEFL.(TL)= L/360 (1.36")
CALCULATED VERT. DEFL.(TL) = L/ 999 (0.29")

CANTILEVER DEFLECTION:
ALLOWABLE DEFL.(LL)= L/120 (0.19")
CALCULATED VERT. DEFL.(LL) = L/ 999 (0.01")
ALLOWABLE DEFL.(TL)= L/120 (0.19")
CALCULATED VERT. DEFL.(TL) = L/ 999 (0.01")

CSI: TC=0.93/1.00 (C-E:1) , BC=0.51/1.00 (O-Q:1) , WB=0.65/1.00 (E-O:1) , SSI=0.30/1.00 (B-C:1)

DOL LUMBER=1.00 NAIL=1.00 LS BEND=1.10 COMP=1.10 SHEAR=1.10 TENS= 1.10

COMPANION LIVE LOAD FACTOR = 1.00

TRUSS PLATE MANUFACTURER IS NOT RESPONSIBLE FOR QUALITY CONTROL IN THE TRUSS MANUFACTURING PLANT .

NAIL VALUES

PLATE	GRIP(DRY) (PSI) MAX	MIN	SHEAR (PLI) MAX	MIN	SECTION (PLI) MAX	MIN
MT20	618	354	1667	786	1987	1656

PLATE PLACEMENT TOL. = 0.250 Inches

PLATE ROTATION TOL. = 5.0 Deg.

JSI GRIP= 0.89 (A) (INPUT = 0.90)
JSI METAL= 0.70 (N) (INPUT = 1.00)

A-18023698

CONTINUED ON PAGE 2

JOB NAME	TRUSS NAME	QUANTITY	PLY	JOB DESC.	DRWG NO.
292655	H4	15	1	TRUSS DESC.	

Alpa Roof Truss, Maple

Version 8.200 S Jan 6 2018 MiTek Industries, Inc. Sun Feb 18 12:16:06 2018 Page 1

ID:HSVaWlIDnhr?B6oeweH9vbyNdls-C1R5OKlj_ZRUazpXoovjCIVpWlDyPMySwXZJ1Czjwld

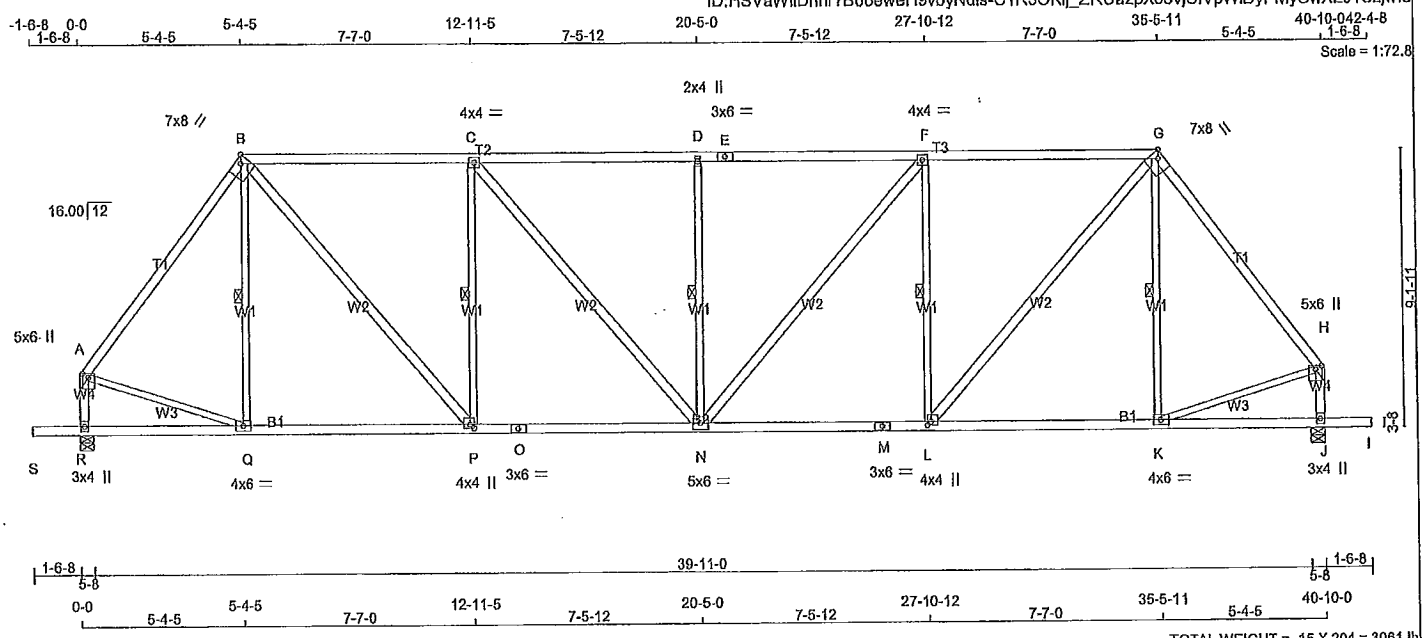

TOTAL WEIGHT = 15 X 204 = 3061 lb

[M][F]

LUMBER

N. L. G. A. RULES

CHORDS	SIZE		LUMBER	DESCR.
A - B	2x4	DRY	No.2	SPF
B - E	2x4	DRY	No.2	SPF
E - G	2x4	DRY	No.2	SPF
G - H	2x4	DRY	No.2	SPF
R - A	2x4	DRY	No.2	SPF
J - H	2x4	DRY	No.2	SPF
S - O	2x4	DRY	No.2	SPF
O - M	2x4	DRY	No.2	SPF
M - I	2x4	DRY	No.2	SPF
ALL. WEBS	2x3	DRY	No.2	SPF
EXCEPT				
B - P	2x4	DRY	No.2	SPF
C - N	2x4	DRY	No.2	SPF
N - F	2x4	DRY	No.2	SPF
L - G	2x4	DRY	No.2	SPF

DRY: SEASONED LUMBER.

PLATES (table is in inches)

JT	TYPE	PLATES	W	LEN	Y	X
A	TMVW+p	MT20	5.0	6.0	1.50	2.50
B	TTWW-h	MT20	7.0	8.0	Edge	2.75
C	TMWW-t	MT20	4.0	4.0		
D	TMW+w	MT20	2.0	4.0		
E	TS-t	MT20	3.0	6.0		
F	TMWW-t	MT20	4.0	4.0		
G	TTWW-h	MT20	7.0	8.0	Edge	2.75
H	TMVW+p	MT20	5.0	6.0	1.50	2.50
J	BMV1+p	MT20	3.0	4.0		
K	BMWW-t	MT20	4.0	6.0		
L	BMWW+t	MT20	4.0	4.0	1.50	1.50
M	BS-t	MT20	3.0	6.0		
N	BMWWW-t	MT20	5.0	6.0		
O	BS-t	MT20	3.0	6.0		
P	BMWW+t	MT20	4.0	4.0	1.50	1.50
Q	BMWW-t	MT20	4.0	6.0		
R	BMV1+p	MT20	3.0	4.0		

Edge - INDICATES REFERENCE CORNER OF PLATE TOUCHES EDGE OF CHORD.

NOTE: Lateral brace(s) shown shall be 1x4 for Part 9 design as per OBC 9.23.13.11, and no less than 2x4 for Part 4 design

REGISTERED PROFESSIONAL ENGINEER
02/18/2018
EDWIN C. FOK
PROVINCE OF ONTARIO

DIMENSIONS, SUPPORTS AND LOADINGS SPECIFIED BY FABRICATOR TO BE VERIFIED BY BUILDING DESIGNER

BEARINGS

JT	FACTORED GROSS REACTION VERT	HORZ	MAXIMUM FACTORED GROSS REACTION DOWN	HORZ	UPLIFT	INPUT BRG IN-SX	REQRD BRG IN-SX
R	2231	0	2231	0	0	5-8	3-9
J	2231	0	2231	0	0	5-8	3-9

UNFACTORED REACTIONS

JT	1ST LCASE COMBINED	MAX./MIN. COMPONENT REACTIONS SNOW	LIVE	PERM.LIVE	WIND	DEAD	SOIL
R	1601	922 / 0	0 / 0	0 / 0	0 / 0	679 / 0	0 / 0
J	1601	922 / 0	0 / 0	0 / 0	0 / 0	679 / 0	0 / 0

BEARING MATERIAL TO BE SPF NO.2 OR BETTER AT JOINT(S) R, J

BRACING

FOR SECTION B-G, MAX. PURLIN SPACING = 2.00 FT.
FOR OTHER SECTIONS, TOP CHORD TO BE SHEATHED OR MAX. PURLIN SPACING = 4.57 FT.
MAX. UNBRACED BOTTOM CHORD LENGTH = 10.00 FT OR RIGID CEILING DIRECTLY APPLIED.

ALL PITCH BREAKS AND PERIMETER CORNER JOINTS MUST BE LATERALLY RESTRAINED.

1 LATERAL BRACE(S) AT 1/ 2 LENGTH OF B-Q, C-P, D-N, F-L, G-K.

END VERTICAL(S) MUST BE SHEATHED OR HAVE BRACES AS INDICATED IN THE MAX. UNBRACED LENGTH COLUMN OF THE TABLE BELOW

LOADING

TOTAL LOAD CASES: (4)

CHORDS

MEMB. FR-TO	MAX. FACTORED FORCE (LBS)	FACTORED VERT. LOAD LC1 (PLF) FROM	TO	MAX CSI (LC)	MAX. UNBRAC LENGTH
A- B	-1879 / 0	-78.0	-78.0	0.44 (1)	4.57
B- C	-2176 / 0	-85.5	-85.5	0.73 (1)	2.00
C- D	-2482 / 0	-85.5	-85.5	0.72 (1)	2.00
D- E	-2482 / 0	-85.5	-85.5	0.72 (1)	2.00
E- F	-2482 / 0	-85.5	-85.5	0.72 (1)	2.00
F- G	-2176 / 0	-85.5	-85.5	0.73 (1)	2.00
G- H	-1879 / 0	-78.0	-78.0	0.44 (1)	4.57
R- A	-2046 / 0	0.0	0.0	0.24 (1)	5.91
J- H	-2046 / 0	0.0	0.0	0.24 (1)	5.91
S- R	0 / 0	-96.5	-96.5	0.16 (1)	10.00
R- Q	0 / 0	-18.5	-18.5	0.18 (4)	10.00
Q- P	0 / 1120	-18.5	-18.5	0.33 (4)	10.00
P- O	0 / 2176	-18.5	-18.5	0.47 (1)	10.00
O- N	0 / 2176	-18.5	-18.5	0.47 (1)	10.00
N- M	0 / 2176	-18.5	-18.5	0.47 (1)	10.00
M- L	0 / 2176	-18.5	-18.5	0.47 (1)	10.00
L- K	0 / 1120	-18.5	-18.5	0.33 (4)	10.00
K- J	0 / 0	-18.5	-18.5	0.18 (4)	10.00
J- I	0 / 0	-96.5	-96.5	0.16 (1)	10.00

WEBS

MEMB. FR-TO	MAX. FACTORED FORCE (LBS)	MAX CSI (LC)
Q- B	-198 / 3	0.11 (1)
B- P	0 / 1618	0.26 (1)
P- C	-1084 / 0	0.59 (1)
C- N	0 / 474	0.08 (1)
N- D	-589 / 0	0.32 (1)
N- F	0 / 474	0.08 (1)
L- F	-1084 / 0	0.59 (1)
L- G	0 / 1618	0.26 (1)
K- G	-198 / 3	0.11 (1)
A- Q	0 / 1170	0.26 (1)
K- H	0 / 1170	0.26 (1)

DESIGN CRITERIA

SPECIFIED LOADS:

TOP CH.	LL	=	21.0	PSF
	DL	=	6.0	PSF
BOT CH.	LL	=	0.0	PSF
	DL	=	7.4	PSF
TOTAL LOAD		=	34.4	PSF

SPACING = 24.0 IN. C/C

LOADING IN FLAT SECTION BASED ON PIGGYBACK TRUSS WITH SLOPES OF 6.00/12 AND -6.00/12 AND RESPECTIVE WALL HEIGHTS OF 0-0 AND 0-0 AND AN ADDITIONAL DEAD LOAD OF 3.0 P.S.F.

THIS TRUSS IS DESIGNED FOR RESIDENTIAL OR SMALL BUILDING REQUIREMENTS OF PART 9, NBCC 2010, NBCC 2015

THIS DESIGN COMPLIES WITH:
- PART 9 OF OBC 2012, OBC 2018
- CSA 086-09, CSA 086-14
- TPIC 2011, TPIC 2014

(55 % OF 23.0 P.S.F. G.S.L. PLUS 8.4 P.S.F. RAIN LOAD) EQUALS 21.0 P.S.F. SPECIFIED ROOF LIVE LOAD

ALLOWABLE DEFL.(LL)= L/360 (1.36")
CALCULATED VERT. DEFL.(LL) = L/ 999 (0.11")
ALLOWABLE DEFL.(TL)= L/360 (1.36")
CALCULATED VERT. DEFL.(TL) = L/ 999 (0.26")

CANTILEVER DEFLECTION:
ALLOWABLE DEFL.(LL)= L/120 (0.19")
CALCULATED VERT. DEFL.(LL) = L/ 999 (0.01")
ALLOWABLE DEFL.(TL)= L/120 (0.19")
CALCULATED VERT. DEFL.(TL) = L/ 999 (0.01")

CSI: TC=0.73/1.00 (B-C:1) , BC=0.47/1.00 (N-P:1) , WB=0.59/1.00 (C-P:1) , SSI=0.31/1.00 (B-C:1)

DOL LUMBER=1.00 NAIL=1.00 LS BEND=1.10 COMP=1.10 SHEAR=1.10 TENS= 1.10

COMPANION LIVE LOAD FACTOR = 1.00

TRUSS PLATE MANUFACTURER IS NOT RESPONSIBLE FOR QUALITY CONTROL IN THE TRUSS MANUFACTURING PLANT .

NAIL VALUES

PLATE	GRIP(DRY) (PSI) MAX	MIN	SHEAR (PLI) MAX	MIN	SECTION (PLI) MAX	MIN
MT20	618	354	1667	788	1987	1656

PLATE PLACEMENT TOL. = 0.250 Inches

PLATE ROTATION TOL. = 5.0 Deg.

JSI GRIP= 0.89 (P) (INPUT = 0.90)
JSI METAL= 0.62 (H) (INPUT = 1.00)

A-18023699

CONTINUED ON PAGE 2

JOB NAME	TRUSS NAME	QUANTITY	PLY	JOB DESC.	DRWG NO.
292655	H5P	2	1	TRUSS DESC.	

Alpa Roof Truss, Maple

Version 8.200 S Jan 6 2018 MiTek Industries, Inc. Sun Feb 18 12:16:13 2018 Page 1

ID:HSVaWlIDnhr?B6oeweH9vbyNdls-VNMlsjn6KlKVw2rtjmXM_nI2rXfVYf3UX7lBnlzjwlW

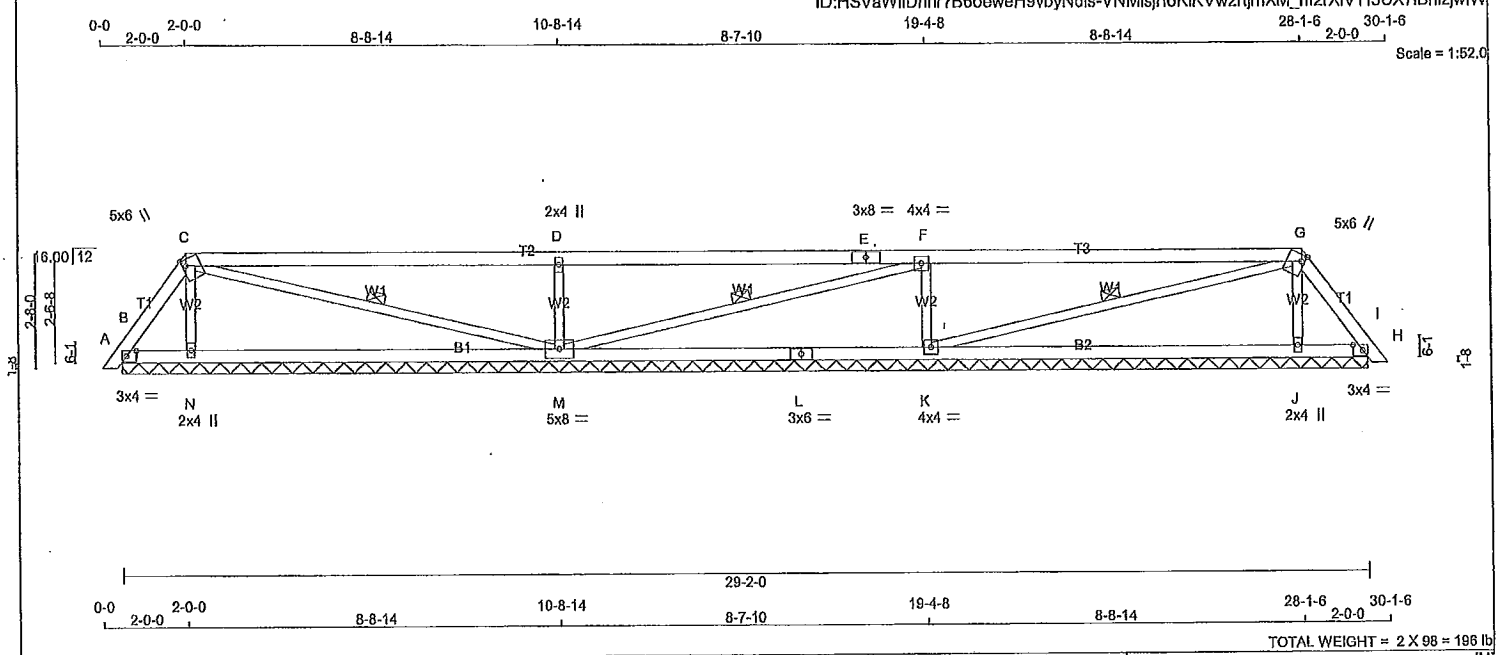

TOTAL WEIGHT = 2 X 98 = 196 lb

[M]

LUMBER

N. L. G. A. RULES

CHORDS	SIZE		LUMBER	DESCR.
A - C	2x4	DRY	No.2	SPF
C - E	2x4	DRY	2100F 1.8E	SPF
E - G	2x4	DRY	2100F 1.8E	SPF
G - I	2x4	DRY	No.2	SPF
B - L	2x4	DRY	No.2	SPF
L - H	2x4	DRY	No.2	SPF
ALL WEBS	2x3	DRY	No.2	SPF

DRY: SEASONED LUMBER.

PLATES (table is in inches)

JT	TYPE	PLATES	W	LEN	Y	X
B	TMB1-I	MT20	3.0	4.0	1.50	2.75
C	TTWW+m	MT20	5.0	6.0	1.75	1.00
D	TMW+w	MT20	2.0	4.0		
E	TS-t	MT20	3.0	8.0		
F	TMWW-t	MT20	4.0	4.0		
G	TTWW+m	MT20	5.0	6.0	1.75	1.00
H	TMB1-I	MT20	3.0	4.0	1.50	2.75
J	BMW1+w	MT20	2.0	4.0		
K	BMWW1-t	MT20	4.0	4.0		
L	BS-t	MT20	3.0	6.0		
M	BMWWW1-t	MT20	5.0	8.0		
N	BMW1+w	MT20	2.0	4.0		

NOTE: Lateral brace(s) shown shall be 1x4 for Part 9 design as per OBC 9.23.13.11, and no less than 2x4 for Part 4 design

REGISTERED PROFESSIONAL ENGINEER
02/18/2018
EDWIN C. FOK
PROVINCE OF ONTARIO

DIMENSIONS, SUPPORTS AND LOADINGS SPECIFIED BY FABRICATOR TO BE VERIFIED BY BUILDING DESIGNER

BEARINGS

JT	FACTORED GROSS REACTION VERT	HORZ	MAXIMUM GROSS REACTION DOWN	HORZ	UPLIFT	FACTORED INPUT BRG IN-SX	REQRD BRG IN-SX
B	113	0	113	0	-15	29-2-0 (13-2-8}5-3	
N	405	0	405	0	0	29-2-0 (13-2-8}5-3	
M	922	0	922	0	0	29-2-0 (13-2-8}5-3	
K	906	0	906	0	0	29-2-0 (13-2-8}5-3	
J	396	0	396	0	0	29-2-0 (13-2-8}5-3	
H	126	0	126	0	-13	29-2-0 (13-2-8}5-3	

VALUE IN PARENTHESIS INDICATES EFFECTIVE BEARING LENGTH

PROVIDE ANCHORAGE AT BEARING JOINT B FOR 150 LBS FACTORED UPLIFT
PROVIDE ANCHORAGE AT BEARING JOINT H FOR 150 LBS FACTORED UPLIFT

UNFACTORED REACTIONS

JT	1ST LCASE COMBINED	MAX./MIN. COMPONENT REACTIONS SNOW	LIVE	PERM.LIVE	WIND	DEAD	SOIL
B	74	85 / 0	0 / 0	0 / 0	0 / 0	0 / -11	0 / 0
N	296	136 / 0	0 / 0	0 / 0	0 / 0	160 / 0	0 / 0
M	656	409 / 0	0 / 0	0 / 0	0 / 0	247 / 0	0 / 0
K	645	400 / 0	0 / 0	0 / 0	0 / 0	244 / 0	0 / 0
J	290	132 / 0	0 / 0	0 / 0	0 / 0	159 / 0	0 / 0
H	83	91 / 0	0 / 0	0 / 0	0 / 0	0 / -9	0 / 0

BEARING MATERIAL TO BE SPF NO.2 OR BETTER AT JOINT(S) B, N, M, K, J, H

BRACING

TOP CHORD TO BE SHEATHED OR MAX. PURLIN SPACING = 6.25 FT.
MAX. UNBRACED BOTTOM CHORD LENGTH = 10.00 FT OR RIGID CEILING DIRECTLY APPLIED.

ALL PITCH BREAKS AND PERIMETER CORNER JOINTS MUST BE LATERALLY RESTRAINED.

1 LATERAL BRACE(S) AT 1/ 2 LENGTH OF C-M, F-M, G-K.

LOADING

TOTAL LOAD CASES: (4)

CHORDS

MEMB. FR-TO	MAX. FACTORED FORCE (LBS)	FACTORED VERT. LOAD LC1 (PLF) FROM	TO	MAX CSI (LC)	MAX. UNBRAC LENGTH
A- B	0 / 10	-78.0	-78.0	0.01 (1)	10.00
B- C	-86 / 0	-78.0	-78.0	0.03 (1)	6.25
C- D	0 / 0	-78.0	-78.0	0.63 (1)	10.00
D- E	-1 / 0	-78.0	-78.0	0.53 (1)	10.00
E- F	-1 / 0	-78.0	-78.0	0.53 (1)	10.00
F- G	-26 / 0	-78.0	-78.0	0.53 (1)	6.25
G- H	-101 / 0	-78.0	-78.0	0.03 (1)	6.25
H- I	0 / 10	-78.0	-78.0	0.01 (1)	10.00
B- N	0 / 49	-18.5	-18.5	0.23 (4)	10.00
N- M	0 / 37	-18.5	-18.5	0.28 (4)	10.00
M- L	0 / 25	-18.5	-18.5	0.28 (4)	10.00
L- K	0 / 25	-18.5	-18.5	0.28 (4)	10.00
K- J	0 / 46	-18.5	-18.5	0.28 (4)	10.00
J- H	0 / 58	-18.5	-18.5	0.23 (4)	10.00

WEBS

MEMB. FR-TO	MAX. FACTORED FORCE (LBS)	MAX CSI (LC)
N- C	-254 / 0	0.04 (1)
C- M	-37 / 0	0.02 (1)
M- D	-745 / 0	0.12 (1)
M- F	-25 / 0	0.01 (1)
K- F	-738 / 0	0.12 (1)
K- G	-21 / 0	0.01 (1)
J- G	-245 / 0	0.04 (1)

DESIGN CRITERIA

SPECIFIED LOADS:

TOP CH.	LL =	21.0	PSF
	DL =	6.0	PSF
BOT CH.	LL =	0.0	PSF
	DL =	7.4	PSF
TOTAL LOAD	=	34.4	PSF

SPACING = 24.0 IN. C/C

LOADING IN FLAT SECTION BASED ON A SLOPE OF 2.00/12 MINIMUM

THIS TRUSS IS DESIGNED FOR RESIDENTIAL OR SMALL BUILDING REQUIREMENTS OF PART 9, NBCC 2010, NBCC 2015

THIS DESIGN COMPLIES WITH:
- PART 9 OF OBC 2012, OBC 2018
- CSA 086-09, CSA 086-14
- TPIC 2011, TPIC 2014

(55 % OF 23.0 P.S.F. G.S.L. PLUS 8.4 P.S.F. RAIN LOAD) EQUALS 21.0 P.S.F. SPECIFIED ROOF LIVE LOAD

CSI: TC=0.53/1.00 (F-G:1) , BC=0.28/1.00 (J-K:4) , WB=0.12/1.00 (D-M:1) , SSI=0.32/1.00 (F-G:1)

DOL LUMBER=1.00 NAIL=1.00 LS BEND=1.10 COMP=1.10 SHEAR=1.10 TENS= 1.10

COMPANION LIVE LOAD FACTOR = 1.00

TRUSS PLATE MANUFACTURER IS NOT RESPONSIBLE FOR QUALITY CONTROL IN THE TRUSS MANUFACTURING PLANT.

NAIL VALUES

PLATE	GRIP(DRY) (PSI) MAX	MIN	SHEAR (PLI) MAX	MIN	SECTION (PLI) MAX	MIN
MT20	618	354	1667	788	1987	1656

PLATE PLACEMENT TOL. = 0.250 Inches

PLATE ROTATION TOL. = 5.0 Deg.

JSI GRIP= 0.81 (K) (INPUT = 0.90)
JSI METAL= 0.51 (E) (INPUT = 1.00)

A-18023700

JOB NAME	TRUSS NAME	QUANTITY	PLY	JOB DESC.	DRWG NO.
292655	H6P	2	1	TRUSS DESC.	

Alpa Roof Truss, Maple

Version 8.200 S Jan 6 2018 MiTek Industries, Inc. Sun Feb 18 12:16:20 2018 Page 1
ID:HSVaWlIDnhr?B6oeweH9vbyNdls-oJHOK6tVhsCVG7tDdk9?mF5DdL3jho7W8jy2XOzjwlP

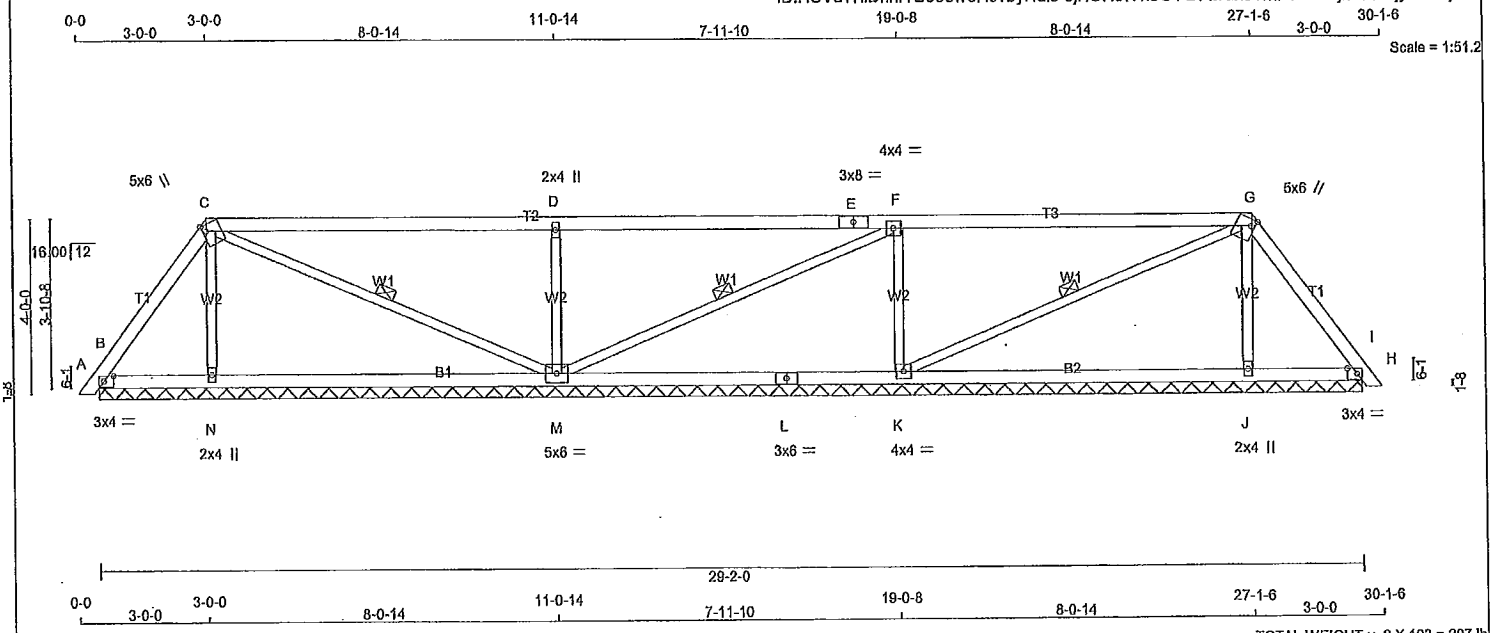

TOTAL WEIGHT = 2 X 103 = 207 lb

[M]

LUMBER
N. L. G. A. RULES

CHORDS	SIZE		LUMBER	DESCR.
A - C	2x4	DRY	No.2	SPF
C - E	2x4	DRY	No.2	SPF
E - G	2x4	DRY	No.2	SPF
G - I	2x4	DRY	No.2	SPF
B - L	2x4	DRY	No.2	SPF
L - H	2x4	DRY	No.2	SPF
ALL WEBS	2x3	DRY	No.2	SPF

DRY: SEASONED LUMBER.

PLATES (table is in inches)

JT	TYPE	PLATES	W	LEN	Y	X
B	TMB1-I	MT20	3.0	4.0	1.50	2.75
C	TTWW+m	MT20	5.0	6.0	1.75	1.00
D	TMW+w	MT20	2.0	4.0		
E	TS-t	MT20	3.0	8.0		
F	TMWW-I	MT20	4.0	4.0		
G	TTWW+m	MT20	5.0	6.0	1.75	1.00
H	TMB1-I	MT20	3.0	4.0	1.50	2.75
J	BMW1+w	MT20	2.0	4.0		
K	BMWW1-t	MT20	4.0	4.0		
L	BS-t	MT20	3.0	6.0		
M	BMWWW1-t	MT20	5.0	6.0		
N	BMW1+w	MT20	2.0	4.0		

NOTE: Lateral brace(s) shown shall be 1x4 for Part 9 design as per OBC 9.23.13.11, and no less than 2x4 for Part 4 design

REGISTERED PROFESSIONAL ENGINEER
02/18/2018
EDWIN C. FOK
PROVINCE OF ONTARIO

DIMENSIONS, SUPPORTS AND LOADINGS SPECIFIED BY FABRICATOR TO BE VERIFIED BY BUILDING DESIGNER

BEARINGS

JT	FACTORED GROSS REACTION VERT	HORZ	MAXIMUM FACTORED GROSS REACTION DOWN	HORZ	UPLIFT	INPUT BRG IN-SX	REQRD BRG IN-SX
B	199	0	199	0	0	29-2-0 (13-2-0)	2-10
N	369	0	369	0	0	29-2-0 (13-2-0)	2-10
M	891	0	891	0	0	29-2-0 (13-2-0)	2-10
K	826	0	826	0	0	29-2-0 (13-2-0)	2-10
J	358	0	358	0	0	29-2-0 (13-2-0)	2-10
H	226	0	226	0	0	29-2-0 (13-2-0)	2-10

VALUE IN PARENTHESIS INDICATES EFFECTIVE BEARING LENGTH

UNFACTORED REACTIONS

JT	1ST LCASE COMBINED	MAX./MIN. COMPONENT REACTIONS SNOW	LIVE	PERM.LIVE	WIND	DEAD	SOIL
B	137	110 / 0	0 / 0	0 / 0	0 / 0	28 / 0	0 / 0
N	269	132 / 0	0 / 0	0 / 0	0 / 0	137 / 0	0 / 0
M	633	399 / 0	0 / 0	0 / 0	0 / 0	235 / 0	0 / 0
K	588	364 / 0	0 / 0	0 / 0	0 / 0	225 / 0	0 / 0
J	261	126 / 0	0 / 0	0 / 0	0 / 0	135 / 0	0 / 0
H	156	124 / 0	0 / 0	0 / 0	0 / 0	32 / 0	0 / 0

BEARING MATERIAL TO BE SPF NO.2 OR BETTER AT JOINT(S) B, N, M, K, J, H

BRACING
TOP CHORD TO BE SHEATHED OR MAX. PURLIN SPACING = 6.25 FT.
MAX. UNBRACED BOTTOM CHORD LENGTH = 10.00 FT OR RIGID CEILING DIRECTLY APPLIED.

ALL PITCH BREAKS AND PERIMETER CORNER JOINTS MUST BE LATERALLY RESTRAINED.

1 LATERAL BRACE(S) AT 1/ 2 LENGTH OF C-M, F-M, G-K.

LOADING
TOTAL LOAD CASES: (4)

CHORDS

MEMB. FR-TO	MAX. FACTORED FORCE (LBS)	FACTORED VERT. LOAD (PLF) FROM	TO	LC1 MAX CSI (LC)	MAX. UNBRAC LENGTH
A- B	0 / 10	-78.0	-78.0	0.01 (1)	10.00
B- C	-96 / 0	-78.0	-78.0	0.09 (1)	6.25
C- D	0 / 16	-78.0	-78.0	0.69 (1)	10.00
D- E	0 / 16	-78.0	-78.0	0.69 (1)	10.00
E- F	0 / 16	-78.0	-78.0	0.69 (1)	10.00
F- G	-39 / 0	-78.0	-78.0	0.69 (1)	6.25
G- H	-128 / 0	-78.0	-78.0	0.09 (1)	6.25
H- I	0 / 10	-78.0	-78.0	0.01 (1)	10.00
B- N	0 / 56	-18.5	-18.5	0.18 (4)	10.00
N- M	0 / 48	-18.5	-18.5	0.24 (4)	10.00
M- L	0 / 39	-18.5	-18.5	0.24 (4)	10.00
L- K	0 / 39	-18.5	-18.5	0.24 (4)	10.00
K- J	0 / 68	-18.5	-18.5	0.24 (4)	10.00
J- H	0 / 74	-18.5	-18.5	0.18 (4)	10.00

WEBS

MEMB. FR-TO	MAX. FACTORED FORCE (LBS)	MAX CSI (LC)
N- C	-245 / 0	0.06 (1)
C- M	-70 / 0	0.04 (1)
M- D	-688 / 0	0.16 (1)
M- F	-60 / 0	0.03 (1)
K- F	-663 / 0	0.16 (1)
K- G	-31 / 0	0.02 (1)
J- G	-235 / 0	0.05 (1)

DESIGN CRITERIA

SPECIFIED LOADS:

TOP CH.	LL	=	21.0	PSF
	DL	=	6.0	PSF
BOT CH.	LL	=	0.0	PSF
	DL	=	7.4	PSF
TOTAL LOAD		=	34.4	PSF

SPACING = 24.0 IN. C/C

LOADING IN FLAT SECTION BASED ON A SLOPE OF 2.00/12 MINIMUM

THIS TRUSS IS DESIGNED FOR RESIDENTIAL OR SMALL BUILDING REQUIREMENTS OF PART 9, NBCC 2010, NBCC 2015

THIS DESIGN COMPLIES WITH:
- PART 9 OF OBC 2012, OBC 2018
- CSA 086-09, CSA 086-14
- TPIC 2011, TPIC 2014

(55 % OF 23.0 P.S.F. G.S.L. PLUS 8.4 P.S.F. RAIN LOAD) EQUALS 21.0 P.S.F. SPECIFIED ROOF LIVE LOAD

CSI: TC=0.69/1.00 (F-G:1) , BC=0.24/1.00 (J-K:4) , WB=0.16/1.00 (D-M:1) , SSI=0.29/1.00 (F-G:1)

DOL LUMBER=1.00 NAIL=1.00 LS BEND=1.10 COMP=1.10 SHEAR=1.10 TENS=1.10

COMPANION LIVE LOAD FACTOR = 1.00

TRUSS PLATE MANUFACTURER IS NOT RESPONSIBLE FOR QUALITY CONTROL IN THE TRUSS MANUFACTURING PLANT .

NAIL VALUES

PLATE	GRIP(DRY) (PSI) MAX	MIN	SHEAR (PLI) MAX	MIN	SECTION (PLI) MAX	MIN
MT20	618	354	1667	788	1987	1656

PLATE PLACEMENT TOL. = 0.250 Inches

PLATE ROTATION TOL. = 5.0 Deg.

JSI GRIP= 0.80 (M) (INPUT = 0.90)
JSI METAL= 0.60 (E) (INPUT = 1.00)

A-18023701

JOB NAME	TRUSS NAME	QUANTITY	PLY	JOB DESC.	DRWG NO.
292655	H7P	2	1	TRUSS DESC.	

Alpa Roof Truss, Maple

Version 8.200 S Jan 6 2018 MiTek Industries, Inc. Sun Feb 18 12:16:32 2018 Page 1
ID:HSVaWIIDnhr?B6oeweH9vbyNdls-S10wrD01sYjoizoXKFNpFnaHFB96VDfHvashyIzjwID

0-0 4-0-0 4-0-0 7-4-14 11-4-14 7-3-10 18-8-8 7-4-14 26-1-6 4-0-0 30-1-6

Scale = 1:51.2

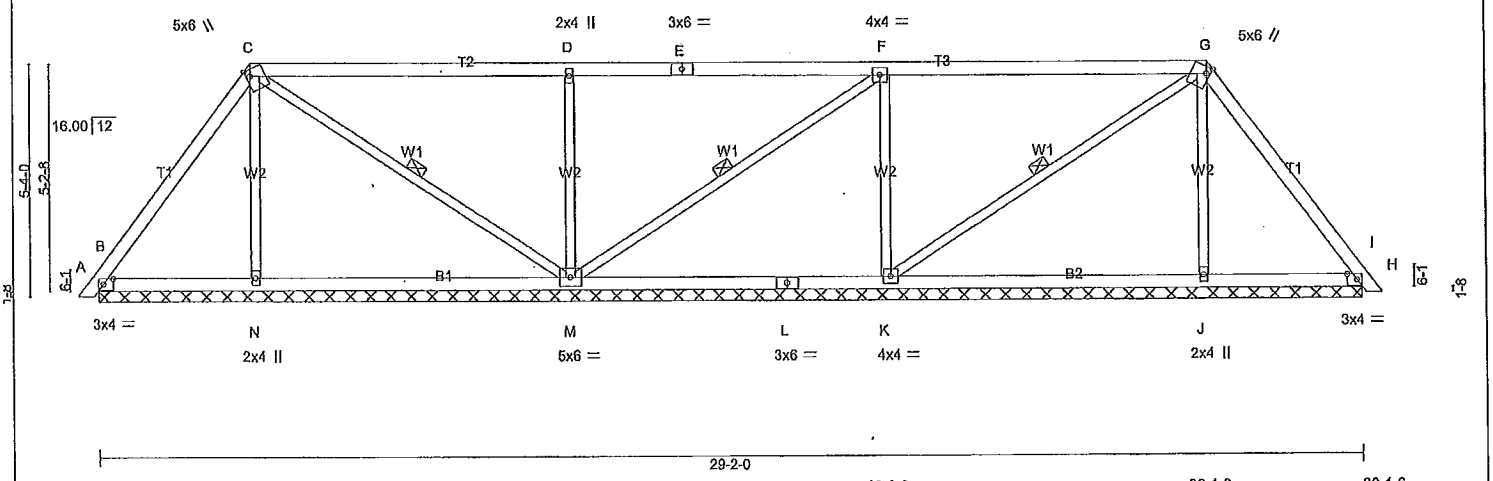

TOTAL WEIGHT = 2 X 109 = 219 lb

[M]

LUMBER
N. L. G. A. RULES

CHORDS	SIZE		LUMBER	DESCR.
A - C	2x4	DRY	No.2	SPF
C - E	2x4	DRY	No.2	SPF
E - G	2x4	DRY	No.2	SPF
G - I	2x4	DRY	No.2	SPF
B - L	2x4	DRY	No.2	SPF
L - H	2x4	DRY	No.2	SPF
ALL WEBS	2x3	DRY	No.2	SPF

DRY: SEASONED LUMBER.

PLATES (table is in inches)

JT	TYPE	PLATES	W	LEN	Y	X
B	TMB1-I	MT20	3.0	4.0	1.50	2.75
C	TTWW+m	MT20	5.0	6.0	1.75	1.00
D	TMW+w	MT20	2.0	4.0		
E	TS-t	MT20	3.0	6.0		
F	TMWW-t	MT20	4.0	4.0		
G	TTWW+m	MT20	5.0	6.0	1.75	1.00
H	TMB1-I	MT20	3.0	4.0	1.50	2.75
J	BMW1+w	MT20	2.0	4.0		
K	BMWW1-t	MT20	4.0	4.0		
L	BS-t	MT20	3.0	6.0		
M	BMWWW1-t	MT20	5.0	6.0		
N	BMW1+w	MT20	2.0	4.0		

NOTE: Lateral brace(s) shown shall be 1x4 for Part 9 design as per OBC 9.23.13.11, and no less than 2x4 for Part 4 design

REGISTERED PROFESSIONAL ENGINEER
02/18/2018
EDWIN C. FOK
PROVINCE OF ONTARIO

DIMENSIONS, SUPPORTS AND LOADINGS SPECIFIED BY FABRICATOR TO BE VERIFIED BY BUILDING DESIGNER

BEARINGS

JT	FACTORED GROSS REACTION VERT	HORZ	MAXIMUM FACTORED GROSS REACTION DOWN	HORZ	UPLIFT	INPUT BRG IN-SX	REQRD BRG IN-SX
B	260	0	260	0	0	29-2-0 (13-2-8)	1-1
N	347	0	347	0	0	29-2-0 (13-2-8)	1-1
M	885	0	885	0	0	29-2-0 (13-2-8)	1-1
K	733	0	733	0	0	29-2-0 (13-2-8)	1-1
J	340	0	340	0	0	29-2-0 (13-2-8)	1-1
H	304	0	304	0	0	29-2-0 (13-2-8)	1-1

VALUE IN PARENTHESIS INDICATES EFFECTIVE BEARING LENGTH

UNFACTORED REACTIONS

JT	1ST LCASE COMBINED	MAX./MIN. COMPONENT REACTIONS SNOW	LIVE	PERM.LIVE	WIND	DEAD	SOIL
B	182	132 / 0	0 / 0	0 / 0	0 / 0	50 / 0	0 / 0
N	253	125 / 0	0 / 0	0 / 0	0 / 0	128 / 0	0 / 0
M	628	402 / 0	0 / 0	0 / 0	0 / 0	225 / 0	0 / 0
K	522	320 / 0	0 / 0	0 / 0	0 / 0	202 / 0	0 / 0
J	248	121 / 0	0 / 0	0 / 0	0 / 0	127 / 0	0 / 0
H	212	155 / 0	0 / 0	0 / 0	0 / 0	57 / 0	0 / 0

BEARING MATERIAL TO BE SPF NO.2 OR BETTER AT JOINT(S) B, N, M, K, J, H

BRACING
TOP CHORD TO BE SHEATHED OR MAX. PURLIN SPACING = 6.25 FT.
MAX. UNBRACED BOTTOM CHORD LENGTH = 10.00 FT OR RIGID CEILING DIRECTLY APPLIED.

ALL PITCH BREAKS AND PERIMETER CORNER JOINTS MUST BE LATERALLY RESTRAINED.

1 LATERAL BRACE(S) AT 1/ 2 LENGTH OF C-M, F-M, G-K.

LOADING
TOTAL LOAD CASES: (4)

CHORDS

MEMB. FR-TO	MAX. FACTORED FORCE (LBS)	FACTORED VERT. LOAD LC1 (PLF) FROM	TO	MAX CSI (LC)	MAX. UNBRAC LENGTH
A- B	0 / 10	-78.0	-78.0	0.01 (1)	10.00
B- C	-98 / 0	-78.0	-78.0	0.17 (1)	6.25
C- D	0 / 37	-78.0	-78.0	0.58 (1)	10.00
D- E	0 / 36	-78.0	-78.0	0.58 (1)	10.00
E- F	0 / 36	-78.0	-78.0	0.58 (1)	10.00
F- G	-50 / 0	-78.0	-78.0	0.58 (1)	6.25
G- H	-152 / 0	-78.0	-78.0	0.17 (1)	6.25
H- I	0 / 10	-78.0	-78.0	0.01 (1)	10.00
B- N	0 / 57	-18.5	-18.5	0.15 (4)	10.00
N- M	0 / 53	-18.5	-18.5	0.20 (4)	10.00
M- L	0 / 50	-18.5	-18.5	0.20 (4)	10.00
L- K	0 / 50	-18.5	-18.5	0.20 (4)	10.00
K- J	0 / 84	-18.5	-18.5	0.21 (4)	10.00
J- H	0 / 89	-18.5	-18.5	0.15 (4)	10.00

WEBS

MEMB. FR-TO	MAX. FACTORED FORCE (LBS)	MAX CSI (LC)
N- C	-231 / 0	0.09 (1)
C- M	-106 / 0	0.06 (1)
M- D	-631 / 0	0.25 (1)
M- F	-104 / 0	0.06 (1)
K- F	-572 / 0	0.23 (1)
K- G	-41 / 0	0.02 (1)
J- G	-224 / 0	0.09 (1)

DESIGN CRITERIA

SPECIFIED LOADS:

TOP CH.	LL	=	21.0	PSF
	DL	=	6.0	PSF
BOT CH.	LL	=	0.0	PSF
	DL	=	7.4	PSF
TOTAL LOAD		=	34.4	PSF

SPACING = 24.0 IN. C/C

LOADING IN FLAT SECTION BASED ON A SLOPE OF 2.00/12 MINIMUM

THIS TRUSS IS DESIGNED FOR RESIDENTIAL OR SMALL BUILDING REQUIREMENTS OF PART 9, NBCC 2010, NBCC 2015

THIS DESIGN COMPLIES WITH:
- PART 9 OF OBC 2012, OBC 2018
- CSA 086-09, CSA 086-14
- TPIC 2011, TPIC 2014

(55 % OF 23.0 P.S.F. G.S.L. PLUS 8.4 P.S.F. RAIN LOAD) EQUALS 21.0 P.S.F. SPECIFIED ROOF LIVE LOAD

CSI: TC=0.58/1.00 (D-F:1) , BC=0.21/1.00 (J-K:4) , WB=0.25/1.00 (D-M:1) , SSI=0.27/1.00 (F-G:1)

DOL LUMBER=1.00 NAIL=1.00 LS BEND=1.10 COMP=1.10 SHEAR=1.10 TENS= 1.10

COMPANION LIVE LOAD FACTOR = 1.00

TRUSS PLATE MANUFACTURER IS NOT RESPONSIBLE FOR QUALITY CONTROL IN THE TRUSS MANUFACTURING PLANT .

NAIL VALUES

PLATE	GRIP(DRY) (PSI) MAX	MIN	SHEAR (PLI) MAX	MIN	SECTION (PLI) MAX	MIN
MT20	618	354	1667	788	1987	1656

PLATE PLACEMENT TOL. = 0.250 Inches

PLATE ROTATION TOL. = 5.0 Deg.

JSI GRIP= 0.64 (G) (INPUT = 0.90)
JSI METAL= 0.16 (E) (INPUT = 1.00)

A-18023702

JOB NAME	TRUSS NAME	QUANTITY	PLY	JOB DESC.	DRWG NO.
292655	H8P	2	1	TRUSS DESC.	

Alpa Roof Truss, Maple

Version 8.200 S Jan 6 2018 MiTek Industries, Inc. Sun Feb 18 12:16:43 2018 Page 1
ID:HSVaWlIDnhr?B6oeweH9vbyNdls-d8A49z9wGw5EWf8eT33OC5YB_dwHa84vRo0mrZzjwI2

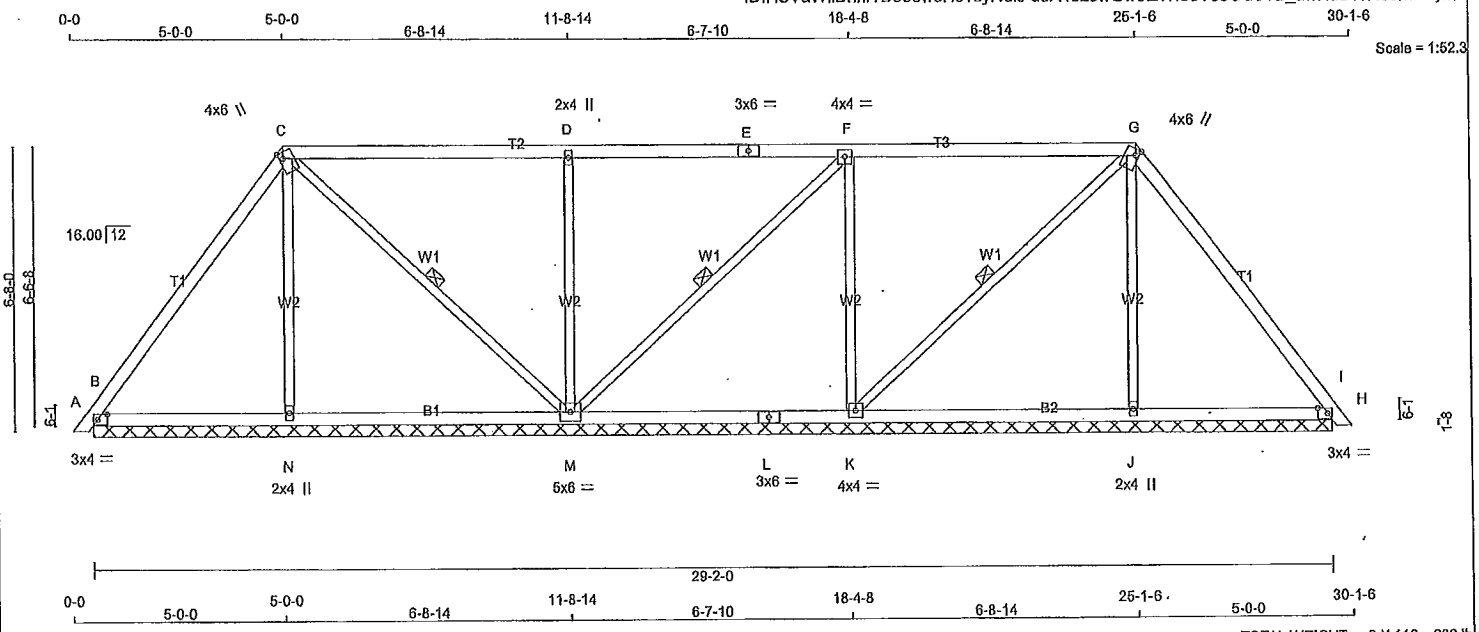

TOTAL WEIGHT = 2 X 116 = 232 lb

[M]

LUMBER
N. L. G. A. RULES

CHORDS	SIZE		LUMBER	DESCR.
A - G	2x4	DRY	No.2	SPF
C - E	2x4	DRY	No.2	SPF
E - G	2x4	DRY	No.2	SPF
G - I	2x4	DRY	No.2	SPF
B - L	2x4	DRY	No.2	SPF
L - H	2x4	DRY	No.2	SPF
ALL WEBS	2x3	DRY	No.2	SPF

DRY: SEASONED LUMBER.

PLATES (table is in inches)

JT	TYPE	PLATES	W	LEN	Y	X
B	TMB1-I	MT20	3.0	4.0	1.50	2.75
C	TTWW+m	MT20	4.0	6.0	1.75	1.00
D	TMW+w	MT20	2.0	4.0		
E	TS-t	MT20	3.0	6.0		
F	TMWW-t	MT20	4.0	4.0		
G	TTWW+m	MT20	4.0	6.0	1.75	1.00
H	TMB1-I	MT20	3.0	4.0	1.50	2.75
J	BMW1+w	MT20	2.0	4.0		
K	BMWW1-t	MT20	4.0	4.0		
L	BS-t	MT20	3.0	6.0		
M	BMWWW1-t	MT20	5.0	6.0		
N	BMW1+w	MT20	2.0	4.0		

NOTE: Lateral brace(s) shown shall be 1x4 for Part 9 design as per OBC 9.23.13.11, and no less than 2x4 for Part 4 design

REGISTERED PROFESSIONAL ENGINEER
02/18/2018
EDWIN C. FOK
PROVINCE OF ONTARIO

DIMENSIONS, SUPPORTS AND LOADINGS SPECIFIED BY FABRICATOR TO BE VERIFIED BY BUILDING DESIGNER

BEARINGS

JT	FACTORED GROSS REACTION VERT	HORZ	MAXIMUM FACTORED GROSS REACTION DOWN	HORZ	UPLIFT	INPUT BRG IN-SX	REQRD BRG IN-SX
B	310	0	310	0	0	29-2-0 (13-2-8)2-0	
N	332	0	332	0	0	29-2-0 (13-2-8)2-0	
M	890	0	890	0	0	29-2-0 (13-2-8)2-0	
K	638	0	638	0	0	29-2-0 (13-2-8)2-0	
J	330	0	330	0	0	29-2-0 (13-2-8)2-0	
H	369	0	369	0	0	29-2-0 (13-2-8)2-0	

VALUE IN PARENTHESIS INDICATES EFFECTIVE BEARING LENGTH

UNFACTORED REACTIONS

JT	1ST LCASE COMBINED	MAX./MIN. COMPONENT REACTIONS SNOW	LIVE	PERM.LIVE	WIND	DEAD	SOIL
B	218	151 / 0	0 / 0	0 / 0	0 / 0	67 / 0	0 / 0
N	242	117 / 0	0 / 0	0 / 0	0 / 0	126 / 0	0 / 0
M	629	412 / 0	0 / 0	0 / 0	0 / 0	217 / 0	0 / 0
K	455	277 / 0	0 / 0	0 / 0	0 / 0	178 / 0	0 / 0
J	241	115 / 0	0 / 0	0 / 0	0 / 0	125 / 0	0 / 0
H	259	183 / 0	0 / 0	0 / 0	0 / 0	76 / 0	0 / 0

BEARING MATERIAL TO BE SPF NO.2 OR BETTER AT JOINT(S) B, N, M, K, J, H

BRACING
TOP CHORD TO BE SHEATHED OR MAX. PURLIN SPACING = 6.25 FT.
MAX. UNBRACED BOTTOM CHORD LENGTH = 10.00 FT OR RIGID CEILING DIRECTLY APPLIED.

ALL PITCH BREAKS AND PERIMETER CORNER JOINTS MUST BE LATERALLY RESTRAINED.

1 LATERAL BRACE(S) AT 1/ 2 LENGTH OF C-M, F-M, G-K.

LOADING
TOTAL LOAD CASES: (4)

CHORDS

MEMB. FR-TO	MAX. FACTORED FORCE (LBS)	FACTORED VERT. LOAD LC1 (PLF) FROM	TO	MAX CSI (LC)	MAX. UNBRAC LENGTH
A- B	0 / 10	-78.0	-78.0	0.01 (1)	10.00
B- C	-95 / 0	-78.0	-78.0	0.27 (1)	6.25
C- D	0 / 51	-78.0	-78.0	0.48 (1)	10.00
D- E	0 / 50	-78.0	-78.0	0.48 (1)	10.00
E- F	0 / 50	-78.0	-78.0	0.48 (1)	10.00
F- G	-53 / 0	-78.0	-78.0	0.48 (1)	6.25
G- H	-168 / 0	-78.0	-78.0	0.28 (1)	6.25
H- I	0 / 10	-78.0	-78.0	0.01 (1)	10.00
B- N	0 / 56	-18.5	-18.5	0.14 (4)	10.00
N- M	0 / 52	-18.5	-18.5	0.17 (4)	10.00
M- L	0 / 53	-18.5	-18.5	0.17 (4)	10.00
L- K	0 / 53	-18.5	-18.5	0.17 (4)	10.00
K- J	0 / 95	-18.5	-18.5	0.17 (4)	10.00
J- H	0 / 99	-18.5	-18.5	0.15 (4)	10.00

WEBS

MEMB. FR-TO	MAX. FACTORED FORCE (LBS)	MAX CSI (LC)
N- C	-216 / 0	0.15 (1)
C- M	-139 / 0	0.08 (1)
M- D	-573 / 0	0.40 (1)
M- F	-143 / 0	0.08 (1)
K- F	-475 / 0	0.33 (1)
K- G	-57 / 0	0.03 (1)
J- G	-214 / 0	0.15 (1)

DESIGN CRITERIA

SPECIFIED LOADS:

TOP CH.	LL	=	21.0	PSF
	DL	=	6.0	PSF
BOT CH.	LL	=	0.0	PSF
	DL	=	7.4	PSF
TOTAL LOAD		=	34.4	PSF

SPACING = 24.0 IN. C/C

LOADING IN FLAT SECTION BASED ON A SLOPE OF 2.00/12 MINIMUM

THIS TRUSS IS DESIGNED FOR RESIDENTIAL OR SMALL BUILDING REQUIREMENTS OF PART 9, NBCC 2010, NBCC 2015

THIS DESIGN COMPLIES WITH:
- PART 9 OF OBC 2012, OBC 2018
- CSA 086-09, CSA 086-14
- TPIC 2011, TPIC 2014

(55 % OF 23.0 P.S.F. G.S.L. PLUS 8.4 P.S.F. RAIN LOAD) EQUALS 21.0 P.S.F. SPECIFIED ROOF LIVE LOAD

CSI: TC=0.48/1.00 (D-F:1) , BC=0.17/1.00 (J-K:4) , WB=0.40/1.00 (D-M:1) , SSI=0.25/1.00 (F-G:1)

DOL LUMBER=1.00 NAIL=1.00 LS BEND=1.10 COMP=1.10 SHEAR=1.10 TENS= 1.10

COMPANION LIVE LOAD FACTOR = 1.00

TRUSS PLATE MANUFACTURER IS NOT RESPONSIBLE FOR QUALITY CONTROL IN THE TRUSS MANUFACTURING PLANT.

NAIL VALUES

PLATE	GRIP(DRY) (PSI) MAX	MIN	SHEAR (PLI) MAX	MIN	SECTION (PLI) MAX	MIN
MT20	618	354	1667	788	1987	1656

PLATE PLACEMENT TOL. = 0.250 Inches

PLATE ROTATION TOL. = 5.0 Deg.

JSI GRIP= 0.64 (G) (INPUT = 0.90)
JSI METAL= 0.17 (H) (INPUT = 1.00)

A-18023703

JOB NAME	TRUSS NAME	QUANTITY	PLY	JOB DESC.	DRWG NO.
292655	H18-Cond1	8	1	TRUSS DESC.	

Alpa Roof Truss, Maple

Version 8.200 S Jan 6 2018 MiTek Industries, Inc. Sun Feb 18 12:31:03 2018 Page 1
ID:HSVaWlIDnhr?B6oeweH9vbyNdls-Rb8Ce1ZNk9SDlqtwrgV32S9EflMf44rUBbLH0jzjw4c

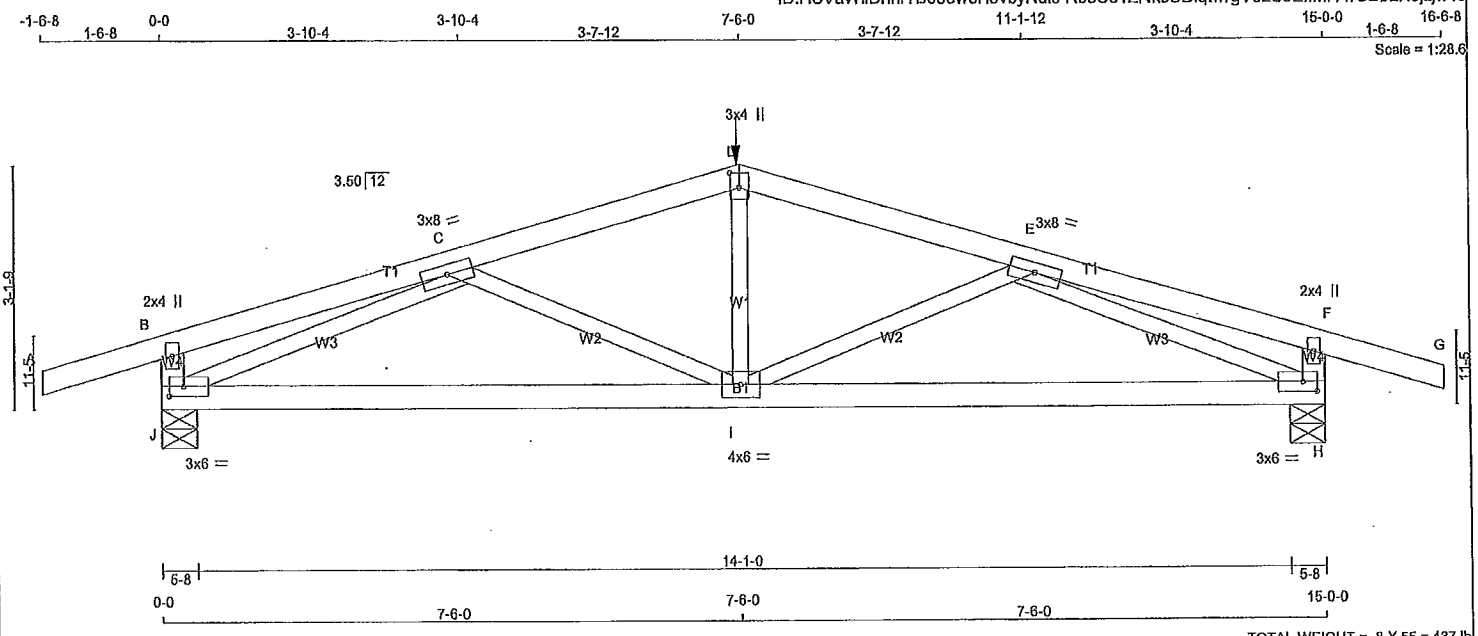

TOTAL WEIGHT = 8 X 55 = 437 lb [M]

LUMBER
N. L. G. A. RULES

CHORDS	SIZE		LUMBER	DESCR.
A - D	2x4	DRY	No.2	SPF
D - G	2x4	DRY	No.2	SPF
J - B	2x4	DRY	No.2	SPF
H - F	2x4	DRY	No.2	SPF
J - H	2x4	DRY	No.2	SPF
ALL WEBS EXCEPT	2x3	DRY	No.2	SPF

DRY: SEASONED LUMBER.

PLATES (table is in inches)

JT	TYPE	PLATES	W	LEN	Y	X
B	TMV+p	MT20	2.0	4.0		
C	TMWW-t	MT20	3.0	8.0		
D	TTW+p	MT20	3.0	4.0	2.25	1.50
E	TMWW-t	MT20	3.0	8.0		
F	TMV+p	MT20	2.0	4.0		
H	BMWW1-t	MT20	3.0	6.0	1.50	2.25
I	BMWWW-t	MT20	4.0	6.0		
J	BMWW1-t	MT20	3.0	6.0	1.50	2.25

HANGERS NOTES
1) SPECIAL HANGER(S) OR CONNECTION(S) REQUIRED TO SUPPORT CONCENTRATED LOAD(S) 164.5 lbs FACTORED DOWN AT 7-6-0 ON TOP CHORD. DESIGN FOR UNSPECIFIED CONNECTION(S) IS DELEGATED TO THE BUILDING DESIGNER.

NOTE: Lateral brace(s) shown shall be 1x4 for Part 9 design as per OBC 9.23.13.11, and no less than 2x4 for Part 4 design

REGISTERED PROFESSIONAL ENGINEER
02/18/2018
EDWIN C. FOK
PROVINCE OF ONTARIO

DIMENSIONS, SUPPORTS AND LOADINGS SPECIFIED BY FABRICATOR TO BE VERIFIED BY BUILDING DESIGNER

BEARINGS

JT	FACTORED GROSS REACTION VERT	HORZ	MAXIMUM FACTORED GROSS REACTION DOWN	HORZ	UPLIFT	INPUT BRG IN-SX	REQRD BRG IN-SX
J	941	0	941	0	0	5-8	1-8
H	941	0	941	0	0	5-8	1-8

UNFACTORED REACTIONS

JT	1ST LCASE COMBINED	MAX./MIN. COMPONENT REACTIONS SNOW	LIVE	PERM.LIVE	WIND	DEAD	SOIL
J	668	426 / 0	0 / 0	0 / 0	0 / 0	242 / 0	0 / 0
H	668	426 / 0	0 / 0	0 / 0	0 / 0	242 / 0	0 / 0

BEARING MATERIAL TO BE SPF NO.2 OR BETTER AT JOINT(S) J, H

BRACING
TOP CHORD TO BE SHEATHED OR MAX. PURLIN SPACING = 5.44 FT.
MAX. UNBRACED BOTTOM CHORD LENGTH = 10.00 FT OR RIGID CEILING DIRECTLY APPLIED.

ALL PITCH BREAKS AND PERIMETER CORNER JOINTS MUST BE LATERALLY RESTRAINED.

LOADING
TOTAL LOAD CASES: (4)

CHORDS

MEMB. FR-TO	MAX. FACTORED FORCE (LBS)	FACTORED VERT. LOAD LC1 (PLF) FROM	TO	MAX CSI (LC)	MAX. UNBRAC LENGTH
A-B	0 / 17	-78.0	-78.0	0.15 (1)	10.00
B-C	0 / 8	-78.0	-78.0	0.15 (1)	10.00
C-D	-1293 / 0	-78.0	-78.0	0.18 (1)	5.44
D-E	-1293 / 0	-78.0	-78.0	0.18 (1)	5.44
E-F	0 / 8	-78.0	-78.0	0.15 (1)	10.00
F-G	0 / 17	-78.0	-78.0	0.15 (1)	10.00
J-B	-244 / 0	0.0	0.0	0.03 (1)	7.81
H-F	-244 / 0	0.0	0.0	0.03 (1)	7.81
J-I	0 / 1381	-20.1	-20.1	0.48 (4)	10.00
I-H	0 / 1381	-20.1	-20.1	0.48 (4)	10.00

WEBS

MEMB. FR-TO	MAX. FACTORED FORCE (LBS)	MAX CSI (LC)
I-D	0 / 322	0.08 (1)
I-E	-163 / 13	0.05 (1)
C-I	-163 / 13	0.05 (1)
J-C	-1521 / 0	0.47 (1)
E-H	-1521 / 0	0.47 (1)

FACTORED CONCENTRATED LOADS (LBS)

JT	LOC.	LC1	MAX-	MAX+	FACE	DIR.	TYPE
D	7-6-0	-164	-164	---	FRONT	VERT	TOTAL

DESIGN CRITERIA

SPECIFIED LOADS:

TOP CH.	LL =	21.0	PSF
	DL =	6.0	PSF
BOT CH.	LL =	0.0	PSF
	DL =	7.4	PSF
TOTAL LOAD	=	34.4	PSF

SPACING = 24.0 IN. C/C

GIRDER TYPE: CPrimeHip
SIDE SETBACK = 7-6-0
END SETBACK = 2-4-2
END WALL WIDTH = 0-0
CORNER FRAMING TYPE: CONVENTIONAL
END JACK TYPE: CONVENTIONAL
APPLIED TO FRONT SIDE
- ADDT'L LOADS BASED ON 55 % OF GSL.

THIS TRUSS IS DESIGNED FOR RESIDENTIAL OR SMALL BUILDING REQUIREMENTS OF PART 9, NBCC 2010, NBCC 2015

THIS DESIGN COMPLIES WITH:
- PART 9 OF OBC 2012, OBC 2018
- CSA 086-09, CSA 086-14
- TPIC 2011, TPIC 2014

(55 % OF 23.0 P.S.F. G.S.L. PLUS 8.4 P.S.F. RAIN LOAD) EQUALS 21.0 P.S.F. SPECIFIED ROOF LIVE LOAD

ALLOWABLE DEFL.(LL)= L/360 (0.50")
CALCULATED VERT. DEFL.(LL) = L/ 999 (0.04")
ALLOWABLE DEFL.(TL)= L/360 (0.60")
CALCULATED VERT. DEFL.(TL) = L/ 999 (0.12")

CSI: TC=0.18/1.00 (D-E:1) , BC=0.48/1.00 (I-J:4) , WB=0.47/1.00 (C-J:1) , SSI=0.14/1.00 (B-C:1)

DOL LUMBER=1.00 NAIL=1.00 LS BEND=1.00 COMP=1.00 SHEAR=1.00 TENS= 1.00

COMPANION LIVE LOAD FACTOR = 1.00

TRUSS PLATE MANUFACTURER IS NOT RESPONSIBLE FOR QUALITY CONTROL IN THE TRUSS MANUFACTURING PLANT .

NAIL VALUES

PLATE	GRIP(DRY) (PSI) MAX	MIN	SHEAR (PLI) MAX	MIN	SECTION (PLI) MAX	MIN
MT20	618	354	1667	788	1987	1656

PLATE PLACEMENT TOL. = 0.250 Inches

PLATE ROTATION TOL. = 5.0 Deg.

JSI GRIP= 0.90 (H) (INPUT = 0.90)
JSI METAL= 0.50 (C) (INPUT = 1.00)

A-18023713

JOB NAME	TRUSS NAME	QUANTITY	PLY	JOB DESC.	DRWG NO.
292657	H1A	1	1	TRUSS DESC.	

Alpa Roof Truss, Maple

Version 8.200 S Jan 6 2018 MiTek Industries, Inc. Sun Feb 18 14:06:30 2018 Page 1

ID:HSVaWlIDnhr?B6oewel-H9vbyNdls-GNhEcIsJ0n?dGxCoryl3fAspYttKQ5vS668qXGzJuh7

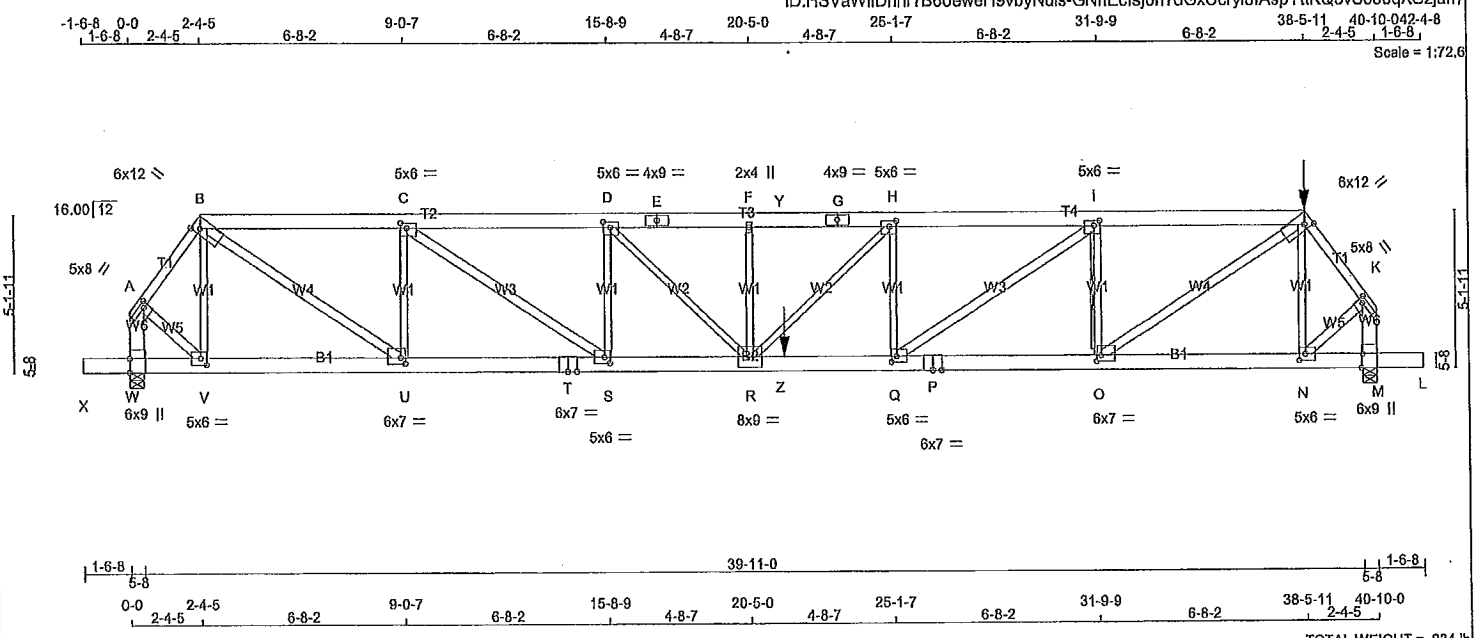

TOTAL WEIGHT = 234 lb

[M]

LUMBER

N. L. G. A. RULES

CHORDS	SIZE		LUMBER	DESCR.
A - B	2x4	DRY	No.2	SPF
B - E	2x6	DRY	1650F 1.5E	SPF
E - G	2x6	DRY	1650F 1.5E	SPF
G - J	2x6	DRY	1650F 1.5E	SPF
J - K	2x4	DRY	No.2	SPF
W - A	2x6	DRY	No.2	SPF
M - K	2x6	DRY	No.2	SPF
X - T	2x6	DRY	2100F 1.8E	SPF
T - P	2x6	DRY	2100F 1.8E	SPF
P - L	2x6	DRY	2100F 1.8E	SPF
ALL WEBS	2x3	DRY	No.2	SPF
EXCEPT				
B - U	2x4	DRY	No.2	SPF
C - S	2x4	DRY	No.2	SPF
Q - I	2x4	DRY	No.2	SPF
O - J	2x4	DRY	No.2	SPF
A - V	2x4	DRY	No.2	SPF
N - K	2x4	DRY	No.2	SPF

DRY: SEASONED LUMBER.

PLATES (table is in inches)

JT	TYPE	PLATES	W	LEN	Y	X
A	TMVW-t	MT20	5.0	8.0	1.75	2.00
B	TTWW+h	MT20	6.0	12.0	3.25	2.00
C	TMWW-t	MT20	5.0	6.0	2.00	2.25
D	TMWW-t	MT20	5.0	6.0	2.25	2.75
E	TS-t	MT20	4.0	9.0		
F	TMW+w	MT20	2.0	4.0		
G	TS-t	MT20	4.0	9.0		
H	TMWW-t	MT20	5.0	6.0	2.25	2.75
I	TMWW-t	MT20	5.0	6.0	2.00	2.25
J	TTWW+h	MT20	6.0	12.0	3.25	2.00
K	TMVW-t	MT20	5.0	8.0	1.75	2.00
M	BMV1+t	MT20	6.0	9.0	Edge	0.50
N	BMWW-t	MT20	5.0	6.0	2.50	2.25
O	BMWW-t	MT20	6.0	7.0	2.25	1.75
P	BS-t	MT20	6.0	7.0		
Q	BMWW-t	MT20	5.0	6.0	2.25	2.00
R	BMWWW-t	MT20	8.0	9.0		

NOTE: Lateral brace(s) shown shall be 1x4 for Part 9 design as per OBC 9.23.13.11, and no less than 2x4 for Part 4 design

REGISTERED PROFESSIONAL ENGINEER
02/18/2018
EDWIN C. FOK
PROVINCE OF ONTARIO

DIMENSIONS, SUPPORTS AND LOADINGS SPECIFIED BY FABRICATOR TO BE VERIFIED BY BUILDING DESIGNER

BEARINGS

JT	FACTORED GROSS REACTION VERT	HORZ	MAXIMUM FACTORED GROSS REACTION DOWN	HORZ	UPLIFT	INPUT BRG IN-SX	REQRD BRG IN-SX
W	3294	0	3294	0	0	5-8	3-2
M	4272	0	4272	0	0	5-8	5-8

UNFACTORED REACTIONS

JT	1ST LCASE COMBINED	SNOW	MAX./MIN. COMPONENT REACTIONS LIVE	PERM.LIVE	WIND	DEAD	SOIL
W	2335	1501 / 0	0 / 0	0 / 0	0 / 0	833 / 0	0 / 0
M	3032	1929 / 0	0 / 0	0 / 0	0 / 0	1103 / 0	0 / 0

BEARING MATERIAL TO BE SPF NO.2 OR BETTER AT JOINT(S) W, M
BEARING SIZE FACTOR = 1.15 AT JNT(S) W, M (BASED ON SUPPORT DEPTH = 1-8)

BRACING

TOP CHORD TO BE SHEATHED OR MAX. PURLIN SPACING = 2.91 FT.
MAX. UNBRACED BOTTOM CHORD LENGTH = 10.00 FT OR RIGID CEILING DIRECTLY APPLIED.

ALL PITCH BREAKS AND PERIMETER CORNER JOINTS MUST BE LATERALLY RESTRAINED.

2x4 DRY SPF No.2 T-BRACE AT I-O

FASTEN T AND I-BRACES TO NARROW EDGE OF WEB WITH ONE ROW PER PLY OF 3" COMMON WIRE NAILS @ 6" O.C. WITH 3" MINIMUM END DISTANCE. BRACE MUST COVER 90% OF WEB LENGTH.

END VERTICAL(S) MUST BE SHEATHED OR HAVE BRACES AS INDICATED IN THE MAX. UNBRACED LENGTH COLUMN OF THE TABLE BELOW

LOADING

TOTAL LOAD CASES: (4)

CHORDS

MEMB. FR-TO	MAX. FACTORED FORCE (LBS)	FACTORED VERT. LOAD LC1 (PLF) FROM	TO	MAX CSI (LC)	MAX. UNBRAC LENGTH
A- B	-2632 / 0	-78.0	-78.0	0.19 (1)	4.09
B- C	-5301 / 0	-78.0	-78.0	0.28 (1)	4.13
C- D	-8020 / 0	-78.0	-78.0	0.41 (1)	3.38
D- E	-9489 / 0	-78.0	-78.0	0.36 (1)	3.16
E- F	-9489 / 0	-78.0	-78.0	0.36 (1)	3.16
F- Y	-9489 / 0	-78.0	-78.0	0.46 (1)	3.05
Y- G	-9489 / 0	-153.5	-153.5	0.46 (1)	3.05
G- H	-9489 / 0	-153.5	-153.5	0.46 (1)	3.05
H- I	-9122 / 0	-153.5	-153.5	0.68 (1)	2.91
I- J	-6547 / 0	-153.5	-153.5	0.53 (1)	3.52
J- K	-3481 / 0	-78.0	-78.0	0.26 (1)	3.55
W- A	-3174 / 0	0.0	0.0	0.26 (1)	5.89
M- K	-4168 / 0	0.0	0.0	0.34 (1)	5.22
X- W	0 / 0	-96.5	-96.5	0.05 (1)	10.00
W- V	0 / 0	-18.5	-18.5	0.05 (1)	10.00
V- U	0 / 1559	-18.5	-18.5	0.13 (1)	10.00
U- T	0 / 5301	-18.5	-18.5	0.34 (1)	10.00
T- S	0 / 5301	-18.5	-18.5	0.34 (1)	10.00
S- R	0 / 8020	-18.5	-18.5	0.55 (1)	10.00
R- Z	0 / 9122	-18.5	-18.5	0.87 (1)	10.00
Z- Q	0 / 9122	-36.4	-36.4	0.87 (1)	10.00
Q- P	0 / 6547	-36.4	-36.4	0.44 (1)	10.00
P- O	0 / 6547	-36.4	-36.4	0.44 (1)	10.00
O- N	0 / 2063	-36.4	-36.4	0.20 (1)	10.00
N- M	0 / 0	-36.4	-36.4	0.09 (4)	10.00
M- L	0 / 0	-96.5	-96.5	0.05 (1)	10.00

WEBS

MEMB. FR-TO	MAX. FACTORED FORCE (LBS)	MAX CSI (LC)
V- B	-823 / 0	0.29 (1)
B- U	0 / 4569	0.81 (1)
U- C	-2496 / 0	0.88 (1)
C- S	0 / 3320	0.59 (1)
S- D	-1911 / 0	0.68 (1)
D- R	0 / 2073	0.51 (1)
R- F	-375 / 0	0.13 (1)
R- H	0 / 517	0.13 (1)
Q- H	-1253 / 0	0.44 (1)
Q- I	0 / 3145	0.56 (1)
O- I	-2972 / 0	0.63 (1)
O- J	0 / 5474	0.97 (1)
N- J	-1000 / 0	0.35 (1)
A- V	0 / 1854	0.33 (1)
N- K	0 / 2452	0.43 (1)

DESIGN CRITERIA

*** SPECIAL LOADS ANALYSIS ***
GEOMETRY AND/OR BASIC LOADS CHANGED BY USER.
LOADS WERE DERIVED FROM USER INPUT
NO FURTHER MODIFICATIONS WERE MADE

SPECIFIED LOADS:

TOP CH.	LL	=	21.0	PSF
	DL	=	6.0	PSF
BOT CH.	LL	=	0.0	PSF
	DL	=	7.4	PSF
TOTAL LOAD		=	34.4	PSF

SPACING = 24.0 IN. C/C

LOADING IN FLAT SECTION BASED ON A SLOPE OF 2.00/12 MINIMUM

GIRDER TYPE: CPrimeHip
SIDE SETBACK = 2-4-5
END SETBACK = 5-10-8
END WALL WIDTH = 0-0
CORNER FRAMING TYPE: CONVENTIONAL
END JACK TYPE: CONVENTIONAL
APPLIED TO FRONT SIDE
- ADDT'L LOADS BASED ON 55 % OF GSL.
LOADS APPLIED TO FIRST 19-5-0 OF SPAN MEASURED FROM THE RIGHT.

*** NON STANDARD GIRDER ***
ADDT'L USER-DEFINED LOADS APPLIED TO ALL LOAD CASES.

THIS TRUSS IS DESIGNED FOR RESIDENTIAL OR SMALL BUILDING REQUIREMENTS OF PART 9, NBCC 2010, NBCC 2015

THIS DESIGN COMPLIES WITH:
- PART 9 OF OBC 2012, OBC 2018
- CSA 086-09, CSA 086-14
- TPIC 2011, TPIC 2014

(55 % OF 23.0 P.S.F. G.S.L. PLUS 8.4 P.S.F. RAIN LOAD) EQUALS 21.0 P.S.F. SPECIFIED ROOF LIVE LOAD

ALLOWABLE DEFL.(LL)= L/360 (1.36")
CALCULATED VERT. DEFL.(LL) = L/ 999 (0.46")
ALLOWABLE DEFL.(TL)= L/360 (1.36")
CALCULATED VERT. DEFL.(TL) = L/ 583 (0.84")

CANTILEVER DEFLECTION:
ALLOWABLE DEFL.(LL)= L/120 (0.19")
CALCULATED VERT. DEFL.(LL) = L/ 999 (0.00")
ALLOWABLE DEFL.(TL)= L/120 (0.19")
CALCULATED VERT. DEFL.(TL) = L/ 999 (0.00")

CSI: TC=0.68/1.00 (H-I:1) , BC=0.87/1.00 (Q-R:1) , WB=0.97/1.00 (J-O:1) , SSI=0.87/1.00 (Q-R:1)

DOL LUMBER=1.00 NAIL=1.00 LS BEND=1.00 COMP=1.00 SHEAR=1.00 TENS= 1.00

COMPANION LIVE LOAD FACTOR = 1.00

AUTOSOLVE HEELS OFF

A-18023726

CONTINUED ON PAGE 2

JOB NAME	TRUSS NAME	QUANTITY	PLY	JOB DESC.	DRWG NO.
292657	H1A	1	1	TRUSS DESC.	

PLATES (table is in inches)

JT	TYPE	PLATES	W	LEN	Y	X
S	BMWW-t	MT20	5.0	6.0	2.25	2.00
T	BS-t	MT20	6.0	7.0		
U	BMWW-t	MT20	6.0	7.0	2.25	1.75
V	BMWW-t	MT20	5.0	6.0	2.60	2.25
W	BMV1+t	MT20	6.0	9.0	Edge	

Edge - INDICATES REFERENCE CORNER OF PLATE TOUCHES EDGE OF CHORD.

HANGERS NOTES

1) SPECIAL HANGER(S) OR CONNECTION(S) REQUIRED TO SUPPORT CONCENTRATED LOAD(S) 134.1 lbs FACTORED DOWN AT 38-5-11 ON TOP CHORD, AND 1559.0 lbs FACTORED DOWN AT 21-6-8 ON BOTTOM CHORD. DESIGN FOR UNSPECIFIED CONNECTION(S) IS DELEGATED TO THE BUILDING DESIGNER.

FACTORED CONCENTRATED LOADS (LBS)

JT	LOC.	LC1	MAX-	MAX+	FACE	DIR.	TYPE
J	38-5-11	-134	-134	—	FRONT	VERT	TOTAL
Z	21-6-8	-1559	-1559	—	FRONT	VERT	TOTAL

TRUSS PLATE MANUFACTURER IS NOT RESPONSIBLE FOR QUALITY CONTROL IN THE TRUSS MANUFACTURING PLANT.

NAIL VALUES

PLATE	GRIP(DRY) (PSI) MAX	MIN	SHEAR (PLI) MAX	MIN	SECTION (PLI) MAX	MIN
MT20	618	354	1667	788	1987	1656

PLATE PLACEMENT TOL. = 0.250 Inches

PLATE ROTATION TOL. = 5.0 Deg.

JSI GRIP= 0.90 (S) (INPUT = 0.90)
JSI METAL= 0.96 (U) (INPUT = 1.00)

NOTE: Lateral brace(s) shown shall be 1x4 for Part 9 design as per OBC 9.23.13.11, and no less than 2x4 for Part 4 design

REGISTERED PROFESSIONAL ENGINEER
02/18/2018
EDWIN C. FOK
PROVINCE OF ONTARIO

A-18023726(r)

JOB NAME	TRUSS NAME	QUANTITY	PLY	JOB DESC.	DRWG NO.
292657	H21S	3	1	TRUSS DESC.	

Alpa Roof Truss, Maple

Version 8.200 S Jan 6 2018 MiTek Industries, Inc. Sun Feb 18 14:06:40 2018 Page 1
ID:HSVaWIIDnhr?B6oeweH9vbyNdls-zIH0jj_?fsFCTUzXR2wP3HGccvS8mmCwPfZMshzjugz

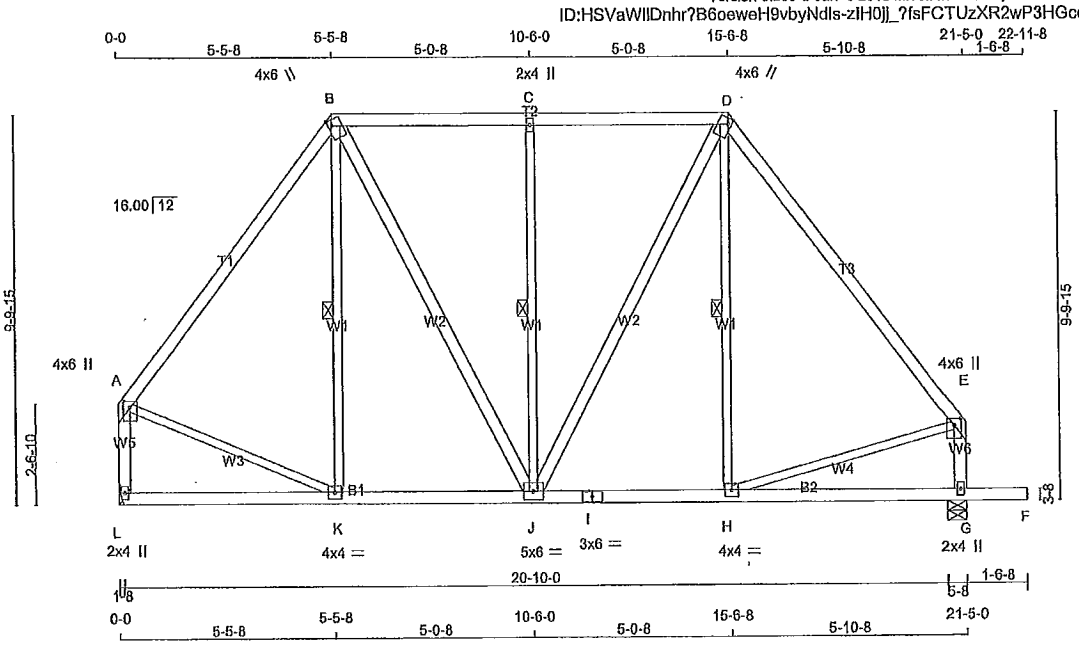

TOTAL WEIGHT = 3 X 120 = 360 lb

[M][F]

LUMBER
N. L. G. A. RULES

CHORDS	SIZE		LUMBER	DESCR.
A - B	2x4	DRY	No.2	SPF
B - D	2x4	DRY	No.2	SPF
D - E	2x4	DRY	1650F 1.5E	SPF
L - A	2x4	DRY	No.2	SPF
G - E	2x4	DRY	No.2	SPF
L - I	2x4	DRY	No.2	SPF
I - F	2x4	DRY	No.2	SPF
ALL WEBS EXCEPT	2x3	DRY	No.2	SPF
B - J	2x4	DRY	No.2	SPF
J - D	2x4	DRY	No.2	SPF

DRY: SEASONED LUMBER.

PLATES (table is in inches)

JT	TYPE	PLATES	W	LEN	Y	X
A	TMVW+p	MT20	4.0	6.0	2.00	2.00
B	TTWW+m	MT20	4.0	6.0	1.75	1.00
C	TMW+w	MT20	2.0	4.0		
D	TTWW+m	MT20	4.0	6.0	1.75	1.00
E	TMVW+p	MT20	4.0	6.0	2.00	2.00
G	BMV1+p	MT20	2.0	4.0		
H	BMWW-t	MT20	4.0	4.0		
I	BS-t	MT20	3.0	6.0		
J	BMWWW-t	MT20	5.0	6.0		
K	BMWW-t	MT20	4.0	4.0		
L	BMV1+p	MT20	2.0	4.0		

NOTE: Lateral brace(s) shown shall be 1x4 for Part 9 design as per OBC 9.23.13.11, and no less than 2x4 for Part 4 design

REGISTERED PROFESSIONAL ENGINEER
02/18/2018
EDWIN C. FOK
PROVINCE OF ONTARIO

DIMENSIONS, SUPPORTS AND LOADINGS SPECIFIED BY FABRICATOR TO BE VERIFIED BY BUILDING DESIGNER

BEARINGS

JT	FACTORED GROSS REACTION VERT	HORZ	MAXIMUM FACTORED GROSS REACTION DOWN	HORZ	UPLIFT	INPUT BRG	REQRD BRG
L	1072	0	1072	0	0	IN-SX	IN-SX
						HANGER BY OTHERS	
						MIN. SEAT SIZE: 1-8	
G	1219	0	1219	0	0	5-8	1-13

UNFACTORED REACTIONS

JT	1ST LCASE COMBINED	MAX./MIN. COMPONENT REACTIONS SNOW	LIVE	PERM.LIVE	WIND	DEAD	SOIL
L	767	450 / 0	0 / 0	0 / 0	0 / 0	318 / 0	0 / 0
G	872	514 / 0	0 / 0	0 / 0	0 / 0	358 / 0	0 / 0

BEARING MATERIAL TO BE SPF NO.2 OR BETTER AT JOINT(S) G

BRACING
FOR SECTION B-D, MAX. PURLIN SPACING = 2.00 FT.
FOR OTHER SECTIONS, TOP CHORD TO BE SHEATHED OR MAX. PURLIN SPACING = 6.25 FT.
MAX. UNBRACED BOTTOM CHORD LENGTH = 10.00 FT OR RIGID CEILING DIRECTLY APPLIED.

ALL PITCH BREAKS AND PERIMETER CORNER JOINTS MUST BE LATERALLY RESTRAINED.

1 LATERAL BRACE(S) AT 1/ 2 LENGTH OF B-K, C-J, D-H.

END VERTICAL(S) MUST BE SHEATHED OR HAVE BRACES AS INDICATED IN THE MAX. UNBRACED LENGTH COLUMN OF THE TABLE BELOW

LOADING
TOTAL LOAD CASES: (4)

CHORDS

MEMB. FR-TO	MAX. FACTORED FORCE (LBS)	FACTORED VERT. LOAD LC1 (PLF) FROM	TO	MAX CSI (LC)	MAX. UNBRAC LENGTH
A- B	-791 / 0	-78.0	-78.0	0.33 (1)	6.25
B- C	-641 / 0	-85.5	-85.5	0.28 (1)	2.00
C- D	-641 / 0	-85.5	-85.5	0.28 (1)	2.00
D- E	-828 / 0	-78.0	-78.0	0.31 (1)	6.25
L- A	-1030 / 0	0.0	0.0	0.14 (1)	7.73
G- E	-1025 / 0	0.0	0.0	0.12 (1)	7.74
L- K	0 / 0	-18.5	-18.5	0.13 (4)	10.00
K- J	0 / 472	-18.5	-18.5	0.18 (4)	10.00
J- I	0 / 494	-18.5	-18.5	0.20 (4)	10.00
I- H	0 / 494	-18.5	-18.5	0.20 (4)	10.00
H- G	0 / 0	-18.5	-18.5	0.15 (4)	10.00
G- F	0 / 0	-96.5	-96.5	0.16 (1)	10.00

WEBS

MEMB. FR-TO	MAX. FACTORED FORCE (LBS)	MAX CSI (LC)
K- B	-69 / 48	0.04 (1)
B- J	0 / 363	0.06 (1)
J- C	-522 / 0	0.34 (1)
J- D	0 / 314	0.05 (1)
H- D	-13 / 76	0.03 (4)
A- K	0 / 507	0.11 (1)
H- E	0 / 512	0.12 (1)

DESIGN CRITERIA

SPECIFIED LOADS:

TOP CH.	LL	=	21.0	PSF
	DL	=	6.0	PSF
BOT CH.	LL	=	0.0	PSF
	DL	=	7.4	PSF
TOTAL LOAD		=	34.4	PSF

SPACING = 24.0 IN. C/C

LOADING IN FLAT SECTION BASED ON PIGGYBACK TRUSS WITH SLOPES OF 6.00/12 AND -6.00/12 AND RESPECTIVE WALL HEIGHTS OF 0-0 AND 0-0 AND AN ADDITIONAL DEAD LOAD OF 3.0 P.S.F.

THIS TRUSS IS DESIGNED FOR RESIDENTIAL OR SMALL BUILDING REQUIREMENTS OF PART 9, NBCC 2010, NBCC 2015

THIS DESIGN COMPLIES WITH:
- PART 9 OF OBC 2012, OBC 2018
- CSA 086-09, CSA 086-14
- TPIC 2011, TPIC 2014

(65 % OF 23.0 P.S.F. G.S.L. PLUS 8.4 P.S.F. RAIN LOAD) EQUALS 21.0 P.S.F. SPECIFIED ROOF LIVE LOAD

ALLOWABLE DEFL.(LL)= L/360 (0.71")
CALCULATED VERT. DEFL.(LL) = L/ 999 (0.01")
ALLOWABLE DEFL.(TL)= L/360 (0.71")
CALCULATED VERT. DEFL.(TL) = L/ 999 (0.04")

CANTILEVER DEFLECTION:
ALLOWABLE DEFL.(LL)= L/120 (0.19")
CALCULATED VERT. DEFL.(LL) = L/ 999 (0.01")
ALLOWABLE DEFL.(TL)= L/120 (0.19")
CALCULATED VERT. DEFL.(TL) = L/ 999 (0.01")

CSI: TC=0.33/1.00 (A-B:1) , BC=0.20/1.00 (H-J:4) , WB=0.34/1.00 (C-J:1) , SSI=0.21/1.00 (B-C:1)

DOL LUMBER=1.00 NAIL=1.00 LS BEND=1.10 COMP=1.10 SHEAR=1.10 TENS= 1.10

COMPANION LIVE LOAD FACTOR = 1.00

TRUSS PLATE MANUFACTURER IS NOT RESPONSIBLE FOR QUALITY CONTROL IN THE TRUSS MANUFACTURING PLANT .

NAIL VALUES

PLATE	GRIP(DRY) (PSI) MAX	MIN	SHEAR (PLI) MAX	MIN	SECTION (PLI) MAX	MIN
MT20	618	354	1667	788	1987	1656

PLATE PLACEMENT TOL. = 0.250 Inches

PLATE ROTATION TOL. = 5.0 Deg.

JSI GRIP= 0.76 (D) (INPUT = 0.90)
JSI METAL= 0.32 (E) (INPUT = 1.00)

A-18023729

JOB NAME	TRUSS NAME	QUANTITY	PLY	JOB DESC.	DRWG NO.
292657	H22P	1	1	TRUSS DESC.	

Alpa Roof Truss, Maple

Version 8.200 S Jan 6 2018 MiTek Industries, Inc. Sun Feb 18 14:06:43 2018 Page 1
ID:HSVaWlIDnhr?B6oeweH9vbyNdls-Ntz9LI0tyndnKxh66AT6hvu9L7W9zBEM5dn1T0zJugw

Scale = 1:30.6

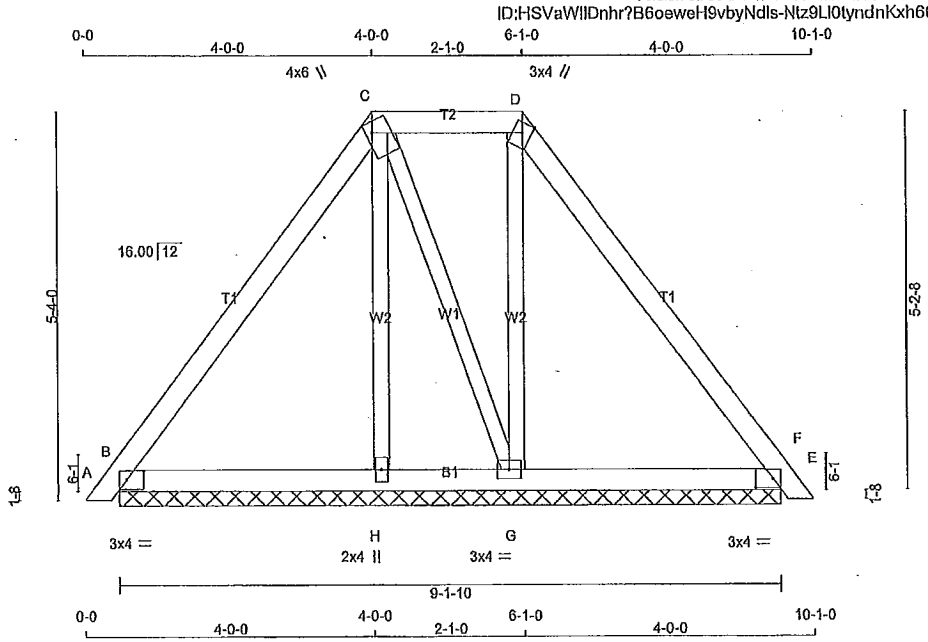

TOTAL WEIGHT = 40 lb

LUMBER
N. L. G. A. RULES

CHORDS	SIZE		LUMBER	DESCR.
A - C	2x4	DRY	No.2	SPF
C - D	2x4	DRY	No.2	SPF
D - F	2x4	DRY	No.2	SPF
B - E	2x4	DRY	No.2	SPF
ALL WEBS	2x3	DRY	No.2	SPF

DRY: SEASONED LUMBER.

PLATES (table is in inches)

JT	TYPE	PLATES	W	LEN	Y	X
B	TMB1-I	MT20	3.0	4.0	1.50	2.75
C	TTWW+m	MT20	4.0	6.0	1.75	1.00
D	TTW+m	MT20	3.0	4.0	Edge	
E	TMB1-I	MT20	3.0	4.0	1.50	2.75
G	BMWW1-I	MT20	3.0	4.0		
H	BMW1+w	MT20	2.0	4.0		

Edge - INDICATES REFERENCE CORNER OF PLATE TOUCHES EDGE OF CHORD.

NOTE: Lateral brace(s) shown shall be 1x4 for Part 9 design as per OBC 9.23.13.11, and no less than 2x4 for Part 4 design

REGISTERED PROFESSIONAL ENGINEER
02/18/2018
EDWIN C. FOK
PROVINCE OF ONTARIO

DIMENSIONS, SUPPORTS AND LOADINGS SPECIFIED BY FABRICATOR TO BE VERIFIED BY, BUILDING DESIGNER

BEARINGS

JT	FACTORED GROSS REACTION VERT	HORZ	MAXIMUM FACTORED GROSS REACTION DOWN	HORZ	UPLIFT	INPUT BRG IN-SX	REQRD BRG IN-SX
B	276	0	276	0	0	9-1-10	7-2
E	251	0	251	0	0	9-1-10	7-2
H	145	0	145	0	0	9-1-10	7-2
G	264	0	264	0	0	9-1-10	7-2

UNFACTORED REACTIONS

JT	1ST LCASE COMBINED	MAX./MIN. COMPONENT REACTIONS SNOW	LIVE	PERM.LIVE	WIND	DEAD	SOIL
B	194	133 / 0	0 / 0	0 / 0	0 / 0	61 / 0	0 / 0
E	177	120 / 0	0 / 0	0 / 0	0 / 0	57 / 0	0 / 0
H	107	48 / 0	0 / 0	0 / 0	0 / 0	59 / 0	0 / 0
G	189	112 / 0	0 / 0	0 / 0	0 / 0	77 / 0	0 / 0

BEARING MATERIAL TO BE SPF NO.2 OR BETTER AT JOINT(S) B, E, H, G

BRACING
TOP CHORD TO BE SHEATHED OR MAX. PURLIN SPACING = 6.25 FT.
MAX. UNBRACED BOTTOM CHORD LENGTH = 10.00 FT OR RIGID CEILING DIRECTLY APPLIED.

ALL PITCH BREAKS AND PERIMETER CORNER JOINTS MUST BE LATERALLY RESTRAINED.

LOADING
TOTAL LOAD CASES: (4)

CHORDS

MEMB. FR-TO	MAX. FACTORED FORCE (LBS)	FACTORED VERT. LOAD (PLF) FROM	TO	LC1 CSI (LC)	MAX UNBRAC LENGTH
A- B	0 / 10	-78.0	-78.0	0.01 (1)	10.00
B- C	-102 / 0	-78.0	-78.0	0.17 (1)	6.25
C- D	-39 / 0	-78.0	-78.0	0.06 (1)	6.25
D- E	-72 / 0	-78.0	-78.0	0.17 (1)	6.25
E- F	0 / 10	-78.0	-78.0	0.01 (1)	10.00
B- H	0 / 60	-18.5	-18.5	0.05 (4)	10.00
H- G	0 / 58	-18.5	-18.5	0.05 (4)	10.00
G- E	0 / 42	-18.5	-18.5	0.05 (4)	10.00

WEBS

MEMB. FR-TO	MAX. FACTORED FORCE (LBS)	MAX CSI (LC)
H- C	-89 / 0	0.04 (1)
C- G	-51 / 0	0.02 (1)
G- D	-160 / 0	0.06 (1)

DESIGN CRITERIA

SPECIFIED LOADS:

TOP CH.	LL =	21.0	PSF
	DL =	6.0	PSF
BOT CH.	LL =	0.0	PSF
	DL =	7.4	PSF
TOTAL LOAD	=	34.4	PSF

SPACING = 24.0 IN. C/C

LOADING IN FLAT SECTION BASED ON A SLOPE OF 2.00/12 MINIMUM

THIS TRUSS IS DESIGNED FOR RESIDENTIAL OR SMALL BUILDING REQUIREMENTS OF PART 9, NBCC 2010, NBCC 2015

THIS DESIGN COMPLIES WITH:
- PART 9 OF OBC 2012, OBC 2018
- CSA 086-09, CSA 086-14
- TPIC 2011, TPIC 2014

(55 % OF 23.0 P.S.F. G.S.L. PLUS 8.4 P.S.F. RAIN LOAD) EQUALS 21.0 P.S.F. SPECIFIED ROOF LIVE LOAD

CSI: TC=0.17/1.00 (B-C:1) , BC=0.05/1.00 (B-H:4) , WB=0.06/1.00 (D-G:1) , SSI=0.06/1.00 (C-D:1)

DOL LUMBER=1.00 NAIL=1.00 LS BEND=1.10 COMP=1.10 SHEAR=1.10 TENS= 1.10

COMPANION LIVE LOAD FACTOR = 1.00

TRUSS PLATE MANUFACTURER IS NOT RESPONSIBLE FOR QUALITY CONTROL IN THE TRUSS MANUFACTURING PLANT.

NAIL VALUES

PLATE	GRIP(DRY) (PSI) MAX	MIN	SHEAR (PLI) MAX	MIN	SECTION (PLI) MAX	MIN
MT20	618	354	1667	788	1987	1656

PLATE PLACEMENT TOL. = 0.250 Inches

PLATE ROTATION TOL. = 5.0 Deg.

JSI GRIP= 0.32 (B) (INPUT = 0.90)
JSI METAL= 0.12 (B) (INPUT = 1.00)

A-18023730

JOB NAME	TRUSS NAME	QUANTITY	PLY	JOB DESC.	DRWG NO.
292657	H23P	2	1	TRUSS DESC.	

Alpa Roof Truss, Maple

Version 8.200 S Jan 6 2018 MiTek Industries, Inc. Sun Feb 18 14:06:46 2018 Page 1
ID:HSVaWIlDnhr?B6oeweH9vbyNdls-oSflzm3lFl0LBPQhnJ1pJYWeoKXtAYKoob0h4Lzjugt

Scale = 1:42.0

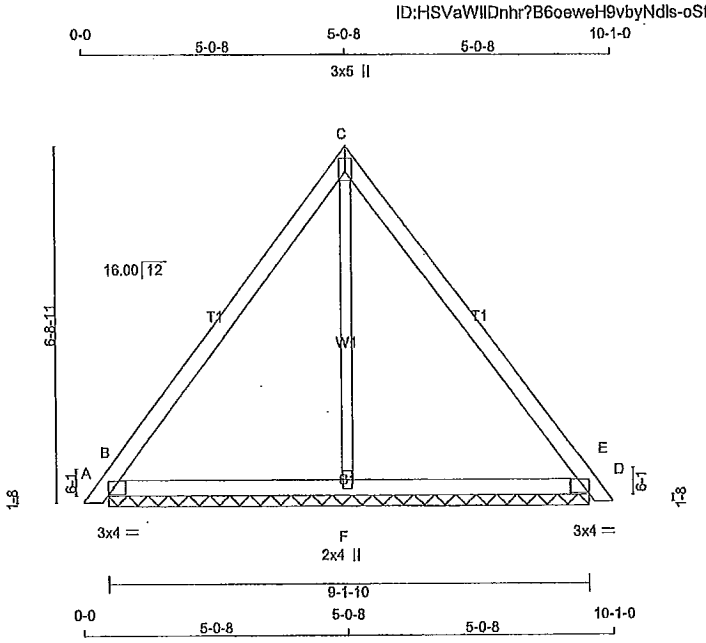

TOTAL WEIGHT = 2 X 34 = 69 lb

LUMBER
N. L. G. A. RULES

CHORDS	SIZE		LUMBER	DESCR.
A - C	2x4	DRY	No.2	SPF
C - E	2x4	DRY	No.2	SPF
B - D	2x4	DRY	No.2	SPF
ALL WEBS	2x3	DRY	No.2	SPF

DRY: SEASONED LUMBER.

PLATES (table is in inches)

JT	TYPE	PLATES	W	LEN	Y	X
B	TMB1-I	MT20	3.0	4.0	1.50	2.75
C	TTW+p	MT20	3.0	5.0	2.00	Edge
D	TMB1-I	MT20	3.0	4.0	1.50	2.75
F	BMW1+w	MT20	2.0	4.0		

Edge - INDICATES REFERENCE CORNER OF PLATE TOUCHES EDGE OF CHORD.

NOTE: Lateral brace(s) shown shall be 1x4 for Part 9 design as per OBC 9.23.13.11, and no less than 2x4 for Part 4 design

REGISTERED PROFESSIONAL ENGINEER
02/18/2018
EDWIN C. FOK
PROVINCE OF ONTARIO

DIMENSIONS, SUPPORTS AND LOADINGS SPECIFIED BY FABRICATOR TO BE VERIFIED BY BUILDING DESIGNER

BEARINGS

JT	FACTORED GROSS REACTION VERT	HORZ	MAXIMUM FACTORED GROSS REACTION DOWN	HORZ	UPLIFT	INPUT BRG IN-SX	REQRD BRG IN-SX
B	335	0	336	0	0	9-1-10	11-0
D	335	0	335	0	0	9-1-10	11-0
F	267	0	267	0	0	9-1-10	11-0

UNFACTORED REACTIONS

JT	1ST LCASE COMBINED	MAX./MIN. COMPONENT REACTIONS SNOW	LIVE	PERM.LIVE	WIND	DEAD	SOIL
B	235	163 / 0	0 / 0	0 / 0	0 / 0	72 / 0	0 / 0
D	235	163 / 0	0 / 0	0 / 0	0 / 0	72 / 0	0 / 0
F	196	87 / 0	0 / 0	0 / 0	0 / 0	109 / 0	0 / 0

BEARING MATERIAL TO BE SPF.NO.2 OR BETTER AT JOINT(S) B, D, F

BRACING
TOP CHORD TO BE SHEATHED OR MAX. PURLIN SPACING = 6.25 FT.
MAX. UNBRACED BOTTOM CHORD LENGTH = 10.00 FT OR RIGID CEILING DIRECTLY APPLIED.

ALL PITCH BREAKS AND PERIMETER CORNER JOINTS MUST BE LATERALLY RESTRAINED.

LOADING
TOTAL LOAD CASES: (4)

CHORDS

MEMB. FR-TO	MAX. FACTORED FORCE (LBS)	FACTORED VERT. LOAD LC1 (PLF) FROM	TO	MAX CSI (LC)	MAX. UNBRAC LENGTH
A- B	0 / 10	-78.0	-78.0	0.01 (1)	10.00
B- C	-121 / 0	-78.0	-78.0	0.28 (1)	6.25
C- D	-121 / 0	-78.0	-78.0	0.28 (1)	6.25
D- E	0 / 10	-78.0	-78.0	0.01 (1)	10.00
B- F	0 / 72	-18.5	-18.5	0.12 (4)	10.00
F- D	0 / 72	-18.5	-18.5	0.12 (4)	10.00

WEBS

MEMB. FR-TO	MAX. FACTORED FORCE (LBS)	MAX CSI (LC)
F- C	-161 / 0	0.11 (1)

DESIGN CRITERIA

SPECIFIED LOADS:

TOP CH.	LL	=	21.0	PSF
	DL	=	6.0	PSF
BOT CH.	LL	=	0.0	PSF
	DL	=	7.4	PSF
TOTAL LOAD		=	34.4	PSF

SPACING = 24.0 IN. C/C

THIS TRUSS IS DESIGNED FOR RESIDENTIAL OR SMALL BUILDING REQUIREMENTS OF PART 9, NBCC 2010, NBCC 2015

THIS DESIGN COMPLIES WITH:
- PART 9 OF OBC 2012, OBC 2018
- CSA 086-09, CSA 086-14
- TPIC 2011, TPIC 2014

(55 % OF 23.0 P.S.F. G.S.L. PLUS 8.4 P.S.F. RAIN LOAD) EQUALS 21.0 P.S.F. SPECIFIED ROOF LIVE LOAD

CSI: TC=0.28/1.00 (C-D:1) , BC=0.12/1.00 (D-F:4) , WB=0.11/1.00 (C-F:1) , SSI=0.08/1.00 (C-D:1)

DOL LUMBER=1.00 NAIL=1.00 LS BEND=1.10 COMP=1.10 SHEAR=1.10 TENS= 1.10

COMPANION LIVE LOAD FACTOR = 1.00

TRUSS PLATE MANUFACTURER IS NOT RESPONSIBLE FOR QUALITY CONTROL IN THE TRUSS MANUFACTURING PLANT .

NAIL VALUES

PLATE	GRIP(DRY) (PSI) MAX	MIN	SHEAR (PLI) MAX	MIN	SECTION (PLI) MAX	MIN
MT20	618	354	1667	788	1987	1656

PLATE PLACEMENT TOL. = 0.250 Inches

PLATE ROTATION TOL. = 5.0 Deg.

JSI GRIP= 0.40 (D) (INPUT = 0.90)
JSI METAL= 0.15 (D) (INPUT = 1.00)

A-18023731

JOB NAME	TRUSS NAME	QUANTITY	PLY	JOB DESC.	DRWG NO.
292657	H26	1	1	TRUSS DESC.	

Alpa Roof Truss, Maple

Version 8.200 S Jan 6 2018 MiTek Industries, Inc. Sun Feb 18 14:06:56 2018 Page 1

ID:HSVaWlIDnhr?B6oeweH9vbyNdls-VNF34BB1umGwOxBcNPC9jfxOBMu1WuJH58RDRmzjug

Scale = 1:65.6

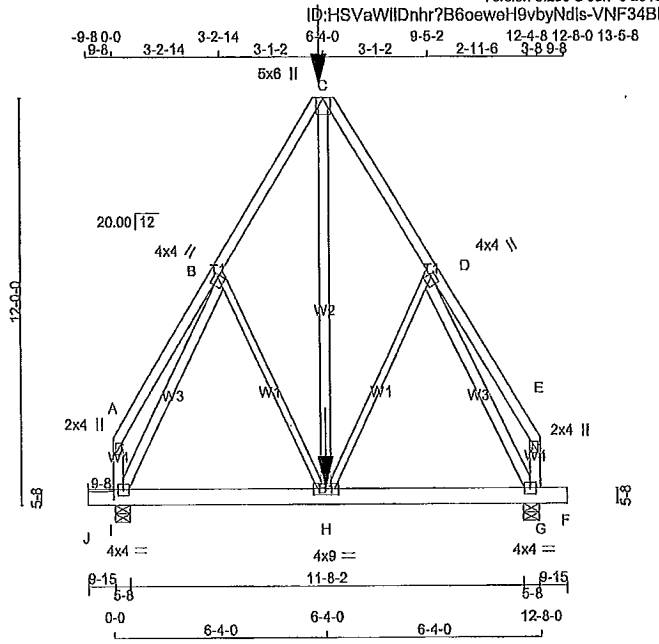

TOTAL WEIGHT = 97 lb

[M]

LUMBER

N. L. G. A. RULES

CHORDS	SIZE		LUMBER	DESCR.
A - C	2x4	DRY	No.2	SPF
C - E	2x4	DRY	No.2	SPF
I - A	2x4	DRY	No.2	SPF
G - E	2x4	DRY	No.2	SPF
J - F	2x6	DRY	No.2	SPF
ALL WEBS EXCEPT	2x4	DRY	No.2	SPF
B - H	2x3	DRY	No.2	SPF
H - D	2x3	DRY	No.2	SPF

DRY: SEASONED LUMBER.

PLATES (table is in inches)

JT	TYPE	PLATES	W	LEN	Y	X
A	TMV+p	MT20	2.0	4.0		
B	TMWW-t	MT20	4.0	4.0	1.50	1.00
C	TMTMW+p	MT20	5.0	6.0	Edge	
D	TMWW-t	MT20	4.0	4.0	1.50	1.00
E	TMV+p	MT20	2.0	4.0		
G	BMVW1-t	MT20	4.0	4.0		
H	BMWWW-t	MT20	4.0	9.0		
I	BMVW1-t	MT20	4.0	4.0		

Edge - INDICATES REFERENCE CORNER OF PLATE TOUCHES EDGE OF CHORD.

HANGERS NOTES

1) SPECIAL HANGER(S) OR CONNECTION(S) REQUIRED TO SUPPORT CONCENTRATED LOAD(S) 793.3 lbs FACTORED DOWN AT 6-4-0 ON TOP CHORD, AND 306.6 lbs FACTORED DOWN AT 6-4-0 ON BOTTOM CHORD. DESIGN FOR UNSPECIFIED CONNECTION(S) IS DELEGATED TO THE BUILDING DESIGNER.

NOTE: Lateral brace(s) shown shall be 1x4 for Part 9 design as per OBC 9.23.13.11, and no less than 2x4 for Part 4 design

REGISTERED PROFESSIONAL ENGINEER
02/18/2018
EDWIN C. FOK
PROVINCE OF ONTARIO

DIMENSIONS, SUPPORTS AND LOADINGS SPECIFIED BY FABRICATOR TO BE VERIFIED BY BUILDING DESIGNER

BEARINGS

JT	FACTORED GROSS REACTION VERT	HORZ	MAXIMUM FACTORED GROSS REACTION DOWN	HORZ	UPLIFT	INPUT BRG IN-SX	REQRD BRG IN-SX
I	1364	0	1364	0	0	5-8	1-8
G	1364	0	1364	0	0	5-8	1-8

UNFACTORED REACTIONS

JT	1ST LCASE COMBINED	MAX./MIN. COMPONENT REACTIONS SNOW	LIVE	PERM.LIVE	WIND	DEAD	SOIL
I	973	593 / 0	0 / 0	0 / 0	0 / 0	379 / 0	0 / 0
G	973	593 / 0	0 / 0	0 / 0	0 / 0	379 / 0	0 / 0

BEARING MATERIAL TO BE SPF NO.2 OR BETTER AT JOINT(S) I, G

BRACING

TOP CHORD TO BE SHEATHED OR MAX. PURLIN SPACING = 6.09 FT.
MAX. UNBRACED BOTTOM CHORD LENGTH = 10.00 FT OR RIGID CEILING DIRECTLY APPLIED.

ALL PITCH BREAKS AND PERIMETER CORNER JOINTS MUST BE LATERALLY RESTRAINED.

LOADING

TOTAL LOAD CASES: (4)

CHORDS

MEMB. FR-TO	MAX. FACTORED FORCE (LBS)	FACTORED VERT. LOAD LC1 (PLF) FROM	TO	MAX CSI (LC)	MAX. UNBRAC LENGTH
A- B	0 / 24	-78.0	-78.0	0.13 (1)	10.00
B- C	-986 / 0	-78.0	-78.0	0.16 (1)	6.09
C- D	-986 / 0	-78.0	-78.0	0.16 (1)	6.09
D- E	0 / 24	-78.0	-78.0	0.13 (1)	10.00
I- A	-91 / 0	0.0	0.0	0.01 (1)	7.81
G- E	-91 / 0	0.0	0.0	0.01 (1)	7.81
J- I	0 / 0	-96.5	-96.5	0.02 (1)	10.00
I- H	0 / 511	-38.5	-38.5	0.26 (4)	10.00
H- G	0 / 511	-38.5	-38.5	0.26 (4)	10.00
G- F	0 / 0	-96.5	-96.5	0.02 (1)	10.00

WEBS

MEMB. FR-TO	MAX. FACTORED FORCE (LBS)	MAX CSI (LC)
H- C	0 / 655	0.12 (1)
I- B	-1211 / 0	0.88 (1)
B- H	-33 / 13	0.04 (1)
H- D	-33 / 13	0.04 (1)
D- G	-1211 / 0	0.88 (1)

FACTORED CONCENTRATED LOADS (LBS)

JT	LOC.	LC1	MAX-	MAX+	FACE	DIR.	TYPE
C	6-4-0	-793	-793	—	FRONT	VERT	TOTAL
H	6-4-0	-307	-307	—	FRONT	VERT	TOTAL

DESIGN CRITERIA

*** SPECIAL LOADS ANALYSIS ***
GEOMETRY AND/OR BASIC LOADS CHANGED BY USER.
LOADS WERE DERIVED FROM USER INPUT
NO FURTHER MODIFICATIONS WERE MADE

SPECIFIED LOADS:

TOP CH.	LL =	21.0	PSF
	DL =	6.0	PSF
BOT CH.	LL =	0.0	PSF
	DL =	7.4	PSF
TOTAL LOAD	=	34.4	PSF

SPACING = 24.0 IN. C/C

GIRDER TYPE: CPrimeHip
LEFT SETBACK = 6-3-9
RIGHT SETBACK = 6-4-0
END SETBACK = 6-4-0
END WALL WIDTH = 0-0
CORNER FRAMING TYPE: CONVENTIONAL
END JACK TYPE: CONVENTIONAL
APPLIED TO FRONT SIDE
- ADDT'L LOADS BASED ON 55 % OF GSL.

*** NON STANDARD GIRDER ***
ADDT'L USER-DEFINED LOADS APPLIED TO ALL LOAD CASES.

THIS TRUSS IS DESIGNED FOR RESIDENTIAL OR SMALL BUILDING REQUIREMENTS OF PART 9, NBCC 2010, NBCC 2015

THIS DESIGN COMPLIES WITH:
- PART 9 OF OBC 2012, OBC 2016
- CSA 086-09, CSA 086-14
- TPIC 2011, TPIC 2014

(55 % OF 23.0 P.S.F. G.S.L. PLUS 8.4 P.S.F. RAIN LOAD) EQUALS 21.0 P.S.F. SPECIFIED ROOF LIVE LOAD

ALLOWABLE DEFL.(LL)= L/360 (0.42")
CALCULATED VERT. DEFL.(LL) = L/ 999 (0.02")
ALLOWABLE DEFL.(TL)= L/360 (0.42")
CALCULATED VERT. DEFL.(TL) = L/ 999 (0.04")

CANTILEVER DEFLECTION:
ALLOWABLE DEFL.(LL)= L/120 (0.19")
CALCULATED VERT. DEFL.(LL) = L/ 999 (0.00")
ALLOWABLE DEFL.(TL)= L/120 (0.19")
CALCULATED VERT. DEFL.(TL) = L/ 999 (0.00")

CSI: TC=0.16/1.00 (B-C:1) , BC=0.26/1.00 (G-H:4) , WB=0.88/1.00 (B-I:1) , SSI=0.17/1.00 (H-I:4)

DOL LUMBER=1.00 NAIL=1.00 LS BEND=1.00 COMP=1.00 SHEAR=1.00 TENS= 1.00

COMPANION LIVE LOAD FACTOR = 1.00

AUTOSOLVE HEELS OFF

TRUSS PLATE MANUFACTURER IS NOT RESPONSIBLE FOR QUALITY CONTROL IN THE TRUSS MANUFACTURING PLANT .

A-18023734

CONTINUED ON PAGE 2

JOB NAME	TRUSS NAME	QUANTITY	PLY	JOB DESC.	DRWG NO.
292657	J7	1	1	TRUSS DESC.	

Alpa Roof Truss, Maple

Version 8.200 S Jan 6 2018 MiTek Industries, Inc. Sun Feb 18 14:06:59 2018 Page 1
ID:HSVaWlIDnhr?B6oeweH9vbyNdls-vyxClDDvBheVFOwB2XmsLHYutZxQjPOjn6gt14zjugg

Scale = 1:66.5

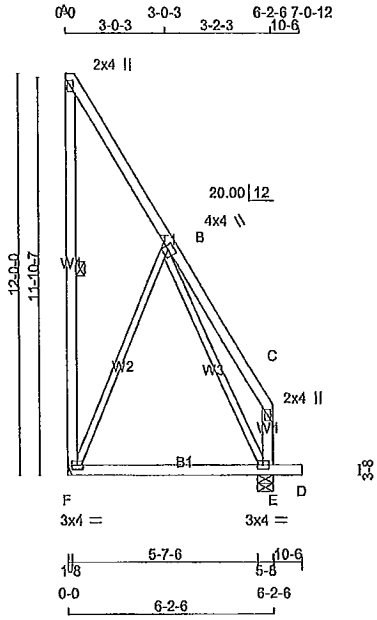

TOTAL WEIGHT = 49 lb

[M][F]

LUMBER
N. L. G. A. RULES

CHORDS	SIZE		LUMBER	DESCR.
F - A	2x4	DRY	No.2	SPF
A - C	2x4	DRY	No.2	SPF
E - C	2x4	DRY	No.2	SPF
F - D	2x4	DRY	No.2	SPF
ALL WEBS	2x3	DRY	No.2	SPF

DRY: SEASONED LUMBER.

PLATES (table is in inches)

JT	TYPE	PLATES	W	LEN	Y	X
A	TMV+p	MT20	2.0	4.0		
B	TMWW-t	MT20	4.0	4.0	2.00	1.50
C	TMV+p	MT20	2.0	4.0		
E	BMVW1-t	MT20	3.0	4.0		
F	BMVW1-t	MT20	3.0	4.0		

NOTE: Lateral brace(s) shown shall be 1x4 for Part 9 design as per OBC 9.23.13.11, and no less than 2x4 for Part 4 design

REGISTERED PROFESSIONAL ENGINEER
02/18/2018
EDWIN C. FOK
PROVINCE OF ONTARIO

DIMENSIONS, SUPPORTS AND LOADINGS SPECIFIED BY FABRICATOR TO BE VERIFIED BY BUILDING DESIGNER

BEARINGS

JT	FACTORED GROSS REACTION VERT	HORZ	MAXIMUM FACTORED GROSS REACTION DOWN	HORZ	UPLIFT	INPUT BRG IN-SX	REQRD BRG IN-SX
F	299	0	299	0	0	HANGER BY OTHERS MIN. SEAT SIZE: 1-8	
E	382	0	382	0	0	5-8	1-8

UNFACTORED REACTIONS

JT	1ST LCASE COMBINED	MAX./MIN. COMPONENT REACTIONS SNOW	LIVE	PERM.LIVE	WIND	DEAD	SOIL
F	213	130 / 0	0 / 0	0 / 0	0 / 0	83 / 0	0 / 0
E	273	166 / 0	0 / 0	0 / 0	0 / 0	106 / 0	0 / 0

BEARING MATERIAL TO BE SPF NO.2 OR BETTER AT JOINT(S) E

BRACING
TOP CHORD TO BE SHEATHED OR MAX. PURLIN SPACING = 6.25 FT.
MAX. UNBRACED BOTTOM CHORD LENGTH = 10.00 FT OR RIGID CEILING DIRECTLY APPLIED.

ALL PITCH BREAKS AND PERIMETER CORNER JOINTS MUST BE LATERALLY RESTRAINED.

1 LATERAL BRACE(S) AT 1/ 2 LENGTH OF A-F.

END VERTICAL(S) MUST BE SHEATHED OR HAVE BRACES AS INDICATED IN THE MAX. UNBRACED LENGTH COLUMN OF THE TABLE BELOW

LOADING
TOTAL LOAD CASES: (4)

CHORDS

MEMB. FR-TO	MAX. FACTORED FORCE (LBS)	FACTORED VERT. LOAD (PLF) FROM	TO	LC1	MAX CSI (LC)	MAX. UNBRAC LENGTH
F- A	-96 / 0	0.0	0.0	0.08 (1)	6.25	
A- B	-25 / 0	-78.0	-78.0	0.10 (1)	6.25	
B- C	0 / 26	-78.0	-78.0	0.13 (1)	10.00	
E- C	-86 / 0	0.0	0.0	0.01 (1)	7.81	
F- E	0 / 70	-18.5	-18.5	0.21 (4)	10.00	
E- D	0 / 0	-96.5	-96.5	0.05 (1)	10.00	

WEBS

MEMB. FR-TO	MAX. FACTORED FORCE (LBS)	MAX CSI (LC)
F- B	-162 / 0	0.18 (1)
B- E	-170 / 0	0.18 (1)

DESIGN CRITERIA

SPECIFIED LOADS:

TOP CH.	LL =	21.0	PSF
	DL =	6.0	PSF
BOT CH.	LL =	0.0	PSF
	DL =	7.4	PSF
TOTAL LOAD	=	34.4	PSF

SPACING = 24.0 IN. C/C

THIS TRUSS IS DESIGNED FOR RESIDENTIAL OR SMALL BUILDING REQUIREMENTS OF PART 9, NBCC 2010, NBCC 2015

THIS DESIGN COMPLIES WITH:
- PART 9 OF OBC 2012, OBC 2018
- CSA 086-09, CSA 086-14
- TPIC 2011, TPIC 2014

(55 % OF 23.0 P.S.F. G.S.L. PLUS 8.4 P.S.F. RAIN LOAD) EQUALS 21.0 P.S.F. SPECIFIED ROOF LIVE LOAD

ALLOWABLE DEFL.(TL)= L/360 (0.21")
CALCULATED VERT. DEFL.(TL) = L/ 999 (0.07")

CANTILEVER DEFLECTION:
ALLOWABLE DEFL.(LL)= L/120 (0.19")
CALCULATED VERT. DEFL.(LL) = L/ 999 (0.00")
ALLOWABLE DEFL.(TL)= L/120 (0.19")
CALCULATED VERT. DEFL.(TL) = L/ 999 (0.00")

CSI: TC=0.13/1.00 (B-C:1) , BC=0.21/1.00 (E-F:4) , WB=0.18/1.00 (B-E:1) , SSI=0.08/1.00 (E-F:4)

DOL LUMBER=1.00 NAIL=1.00 LS BEND=1.10 COMP=1.10 SHEAR=1.10 TENS= 1.10

COMPANION LIVE LOAD FACTOR = 1.00

TRUSS PLATE MANUFACTURER IS NOT RESPONSIBLE FOR QUALITY CONTROL IN THE TRUSS MANUFACTURING PLANT .

NAIL VALUES

PLATE	GRIP(DRY) (PSI) MAX	MIN	SHEAR (PLI) MAX	MIN	SECTION (PLI) MAX	MIN
MT20	618	354	1667	788	1987	1656

PLATE PLACEMENT TOL. = 0.250 Inches

PLATE ROTATION TOL. = 5.0 Deg.

JSI GRIP= 0.24 (B) (INPUT = 0.90)
JSI METAL= 0.10 (B) (INPUT = 1.00)

A-18023735

STRACON ENGINEERING INC.

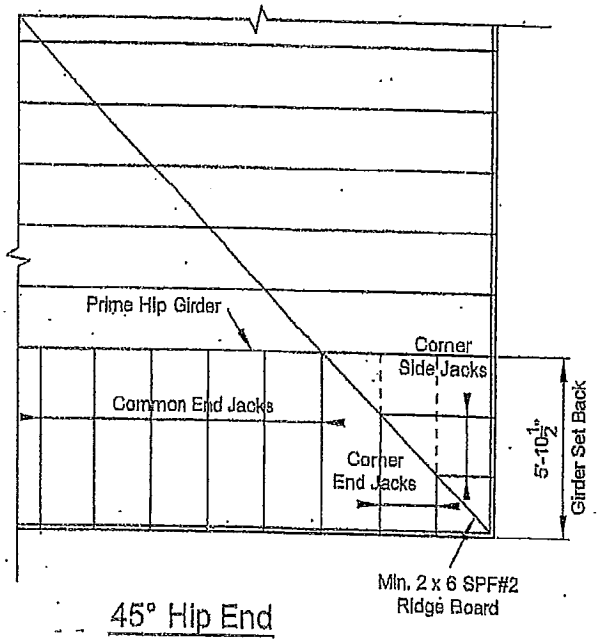

45° Hip End

LUMBER SPECIFICATION

TOP CHORD : 2 x 4 SPF#2
BOTTOM CHORD : 2 x 4 SPF#2
WEBS : 2 x 3 SPF#2
UNLESS OTHERWISE SHOWN

DESIGN LOAD

TOP CHORD SNOW LOAD	:	40.5 P.S.F.
TOP CHORD DEAD LOAD	:	3.0 P.S.F.
BOTTOM CHORD LIVE LOAD	:	0.0 P.S.F.
BOTTOM CHORD DEAD LOAD	:	7.0 P.S.F.
TOTAL LOAD	:	50.5 P.S.F

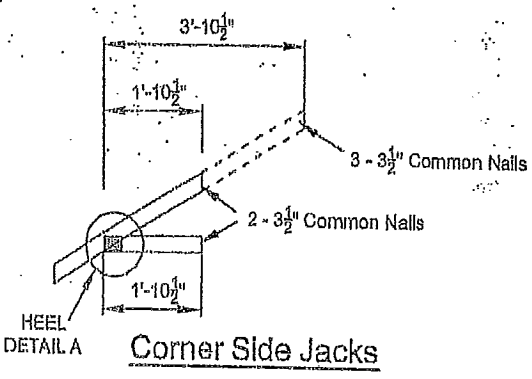

Corner Side Jacks

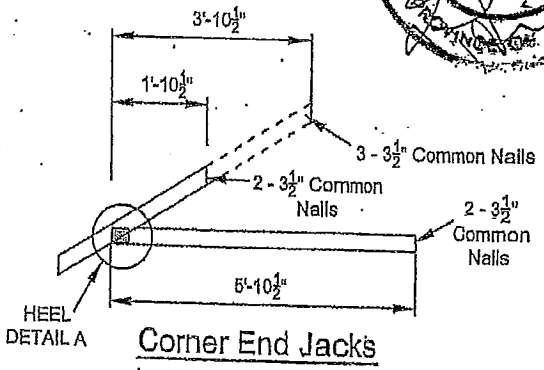

Corner End Jacks

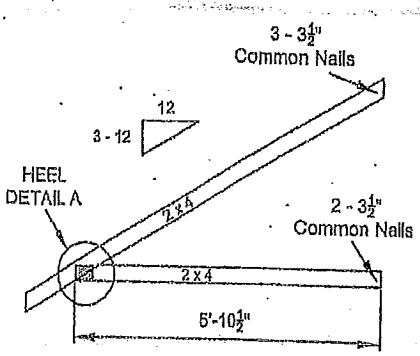

Common End Jacks

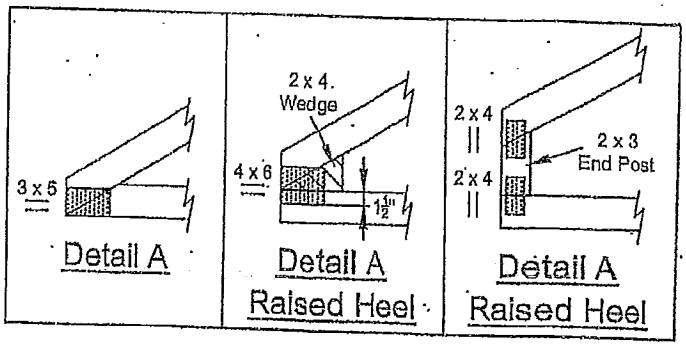

NOTE: DESIGN CONFORMS TO PART 9, O.B.C. 2012 (L.S.D. DESIGN)

CS-51008

TECHNICAL BULLETIN

LUS – Double Shear Joist Hangers

SIMPSON Strong-Tie®

All LUS hangers have double shear nailing. This patented innovation distributes the load through two points on each joist nail for greater strength. It also allows the use of fewer nails, faster installation and the use of common nails for all connections.

Material: 18 gauge

Finish: G90 galvanized

Design:

- Factored resistances are in accordance with CSA O86-14.
- Uplift resistances have been increased 15%. No further increase is permitted.
- Wood shear is not considered in the factored resistances given. The specifier must ensure that the joist and header capacities are capable of withstanding these loads.

Installation:

- Use all specified fasteners.
- Nails: 16d = 0.162" dia. x 3½" long common wire, 10d = 0.148" x 3" long common wire.
- Double shear nails must be driven at an angle through the joist or truss into the header to achieve the table loads.
- Not designed for welded or nailer applications.

Options:

- These hangers cannot be modified

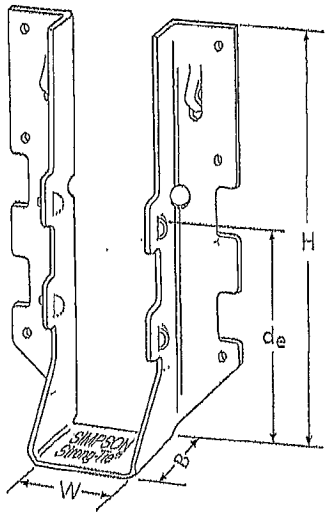

LUS28

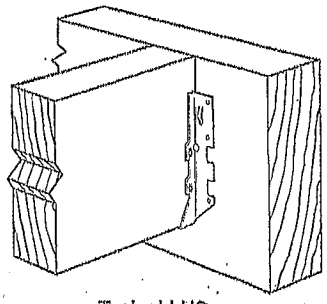

Typical LUS Installation

Model No.	Ga.	Dimensions (in.)				Fasteners		Factored Resistance (lb.)			
								D.Fir-L		S-P-F	
		W	H	B	d_e[1]	Face	Joist	Uplift (K_D=1.15)	Normal (K_D=1.00)	Uplift (K_D=1.15)	Normal (K_D=1.00)
LUS24	18	1 9/16	3⅛	1¾	1 15/16	(4) 10d	(2) 10d	710	1630	645	1155
LUS24-2	18	3⅛	3⅛	2	1 15/16	(4) 16d	(2) 16d	835	2020	590	1435
LUS26	18	1 9/16	4¾	1¾	3⅝	(4) 10d	(4) 10d	1420	2170	1290	1630
LUS26-2	18	3⅛	4⅞	2	4	(4) 16d	(4) 16d	1720	2595	1545	1920
LUS26-3	18	4⅝	4 9/16	2	3¼	(4) 16d	(4) 16d	1720	2595	1545	2340
LUS28	18	1 9/16	6⅝	1¾	3¾	(6) 10d	(6) 10d	1420	2520	1290	1790
LUS28-2	18	3⅛	7	2	4	(6) 16d	(4) 16d	1720	3325	1545	2575
LUS28-3	18	4⅝	6¼	2	3¼	(6) 16d	(4) 16d	1720	3325	1545	2375
LUS210	18	1 9/16	7 13/16	1¾	3⅞	(8) 10d	(4) 10d	1420	2785	1290	2210
LUS210-2	18	3⅛	9	2	6	(8) 16d	(6) 16d	2580	4500	2320	3195
LUS210-3	18	4⅝	8 9/16	2	5¼	(8) 16d	(6) 16d	2580	3345	2320	2375

1. d_e is the distance from the seat of the hanger to the highest joist nail.

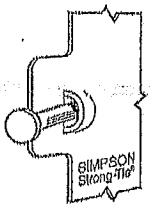

Dome Double Shear Nailing prevents tabs breaking off (available on some models).

U.S. Patent 5,603,580

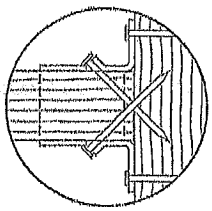

Double Shear Nailing Top View.

LICENSED PROFESSIONAL ENGINEER
4/5/2017
B. D. BUNTING
PROVINCE OF ONTARIO

LIMIT STATES DESIGN

This Technical Bulletin effective thru June 30, 2019, includes information available as of March 1, 2017.
The information is updated periodically and should not be relied upon after June 30, 2019.
Contact Simpson Strong-Tie for current information and limited warranty at www.strongtie.com.

© 2017 Simpson Strong-Tie Company Inc. LUSPEOLUS17/3/17-exp.6/19

(800) 999-5099
strongtie.com

HUS/LJS – Double Shear Joist Hangers

SIMPSON Strong-Tie®

All hangers have double shear nailing. This patented innovation distributes the load through two points on each joist nail for greater strength. It also allows the use of fewer nails, faster installation and the use of common nails for all connections. Do not bend or remove tabs.

Material: See table

Finish: G90 galvanized

Design:

- Factored resistances are in accordance with CSA O86-14.
- Uplift resistances have been increased 15%. No further increase is permitted.
- Wood shear is not considered in the factored resistances given. The specifier must ensure that the joist and header capacities are capable of withstanding these loads.

Installation:

- Use all specified fasteners
- Nails: 16d = 0.162" dia. x 3½" long common wire
- Double shear nails must be driven at an angle through the joist or truss into the header to achieve the table loads
- Not designed for welded or nailer applications

Options:

- See current catalogue for options

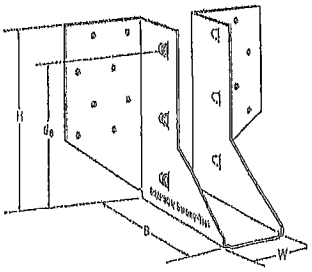

LJS26DS

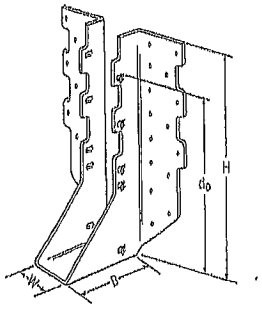

HUS210
(HUS26, HUS28, similar)

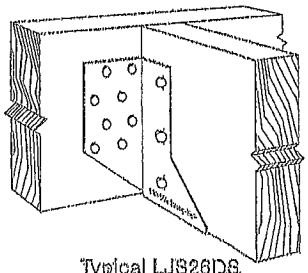

Typical LJS26DS Installation

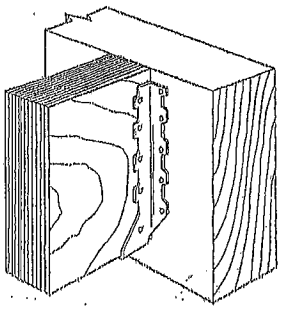

Typical HUS Installation

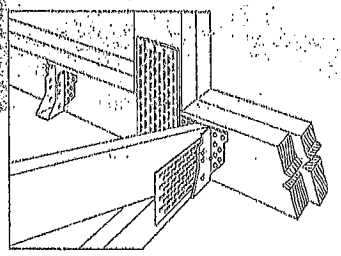

Typical HUS Installation
(Truss Designer to provide fastener quantity for connecting multiple members together)

Model No.	Ga.	Dimensions (in.)				Fasteners		Factored Resistance (lb.)			
								D.Fir-L		S-P-F	
		W	H	B	d_e[1]	Face	Joist	Uplift (K_D=1.15) lb.	Normal (K_D=1.00) lb.	Uplift (K_D=1.15) lb.	Normal (K_D=1.00) lb.
LJS26DS	18	1 9/16	5	3½	4⅝	(16) 16d	(6) 16d	2055	4265	1460	4115
HUS26	16	1⅝	5⅝	3	3 15/16	(14) 16d	(6) 16d	2705	4940	2065	3875
HUS28	16	1⅝	7 3/32	3	6 5/32	(22) 16d	(8) 16d	3605	5365	2675	4345
HUS210	16	1⅝	9 5/32	3	7 31/32	(30) 16d	(10) 16d	4505	5795	4010	4740
HUS1.81/10	16	1 13/16	9	3	8	(30) 16d	(10) 16d	4505	6450	4010	5200

1. d_e is the distance from the seat of the hanger to the highest joist nail.

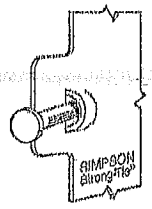

Dome Double Shear Nailing prevents tabs breaking off (available on some models).

U.S. Patent 5,603,580

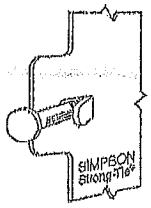

Double Shear Nailing Side View. Do not bend tab back.

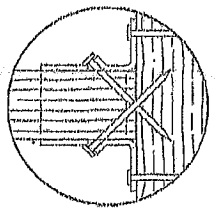

Double Shear Nailing Top View.

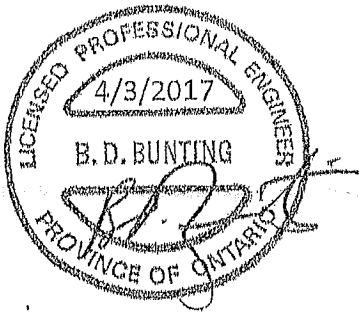

© 2017 Simpson Strong-Tie Company Inc.

TECHNICAL BULLETIN

HHUS – Double Shear Joist Hangers

SIMPSON Strong-Tie®

All HHUS hangers have double shear nailing. This patented innovation distributes the load through two points on each joist nail for greater strength. It also allows the use of fewer nails, faster installation and the use of common nails for all connections. Do not bend or remove tabs.

Material: 14 gauge

Finish: G90 galvanized

Design:

- Factored resistances are in accordance with CSA O86-14.
- Uplift resistances have been increased 15%. No further increase is permitted.
- Wood shear is not considered in the factored resistances given. The specifier must ensure that the joist and header capacities are capable of withstanding these loads.

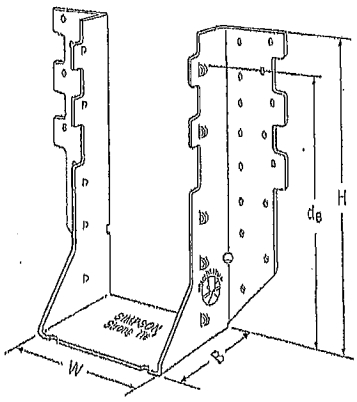

HHUS410

Installation:

- Use all specified fasteners
- Nails: 16d = 0.162" dia. x 3½" long common wire
- Double shear nails must be driven at an angle through the joist or truss into the header to achieve the table loads
- Not designed for welded or nailer applications

Options:

- See current catalogue for options

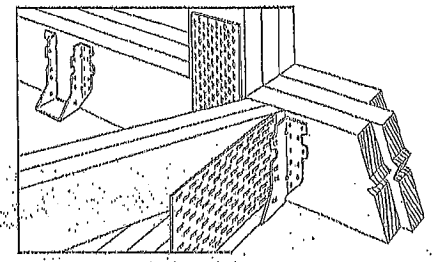

Typical HHUS Installation (Truss Designer to provide fastener quantity for connecting multiple members together)

Model No.	Ga.	Dimensions (in.)				Fasteners		Factored Resistance (lb.)			
								D.Fir-L		S-P-F	
		W	H	B	d_e[1]	Face	Joist	Uplift (K_D=1.15)	Normal (K_D=1.00)	Uplift (K_D=1.15)	Normal (K_D=1.00)
HHUS26-2	14	3 5/16	5 13/16	3	3 15/16	(14) 16d	(6) 16d	2850	7335	2065	5205
HHUS28-2	14	3 5/16	7 7/32	3	6 5/32	(22) 16d	(8) 16d	3765	8940	2675	6345
HHUS210-2	14	3 5/16	9 9/32	3	8	(30) 16d	(10) 16d	4745	9660	4310	7000
HHUS210-3	14	4 11/16	9	3	7 15/16	(30) 16d	(10) 16d	4745	10545	4310	7485
HHUS210-4	14	6 1/8	8 29/32	3	7 27/32	(30) 16d	(10) 16d	4745	10545	4310	7485
HHUS46	14	3 5/8	5 13/32	3	3 15/16	(14) 16d	(6) 16d	2540	7335	2065	5205
HHUS48	14	3 5/8	7 1/8	3	6 1/8	(22) 16d	(8) 16d	3765	8945	2267	6345
HHUS410	14	3 5/8	9	3	8	(30) 16d	(10) 16d	4745	9855	4310	7000
HHUS5.50/10	14	5 1/2	9	3	8	(30) 16d	(10) 16d	4745	10545	4310	7485
HHUS7.25/10	14	7 1/4	9	3 5/16	7 29/32	(30) 16d	(10) 16d	4745	10770	4310	7650

1. d_e is the distance from the seat of the hanger to the highest joist nail.

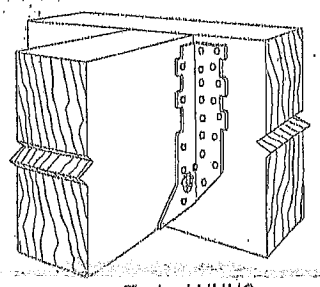

Typical HHUS Installation

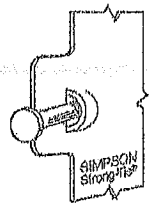

Dome Double Shear Nailing prevents tabs breaking off (available on some models).

U.S. Patent 5,603,580

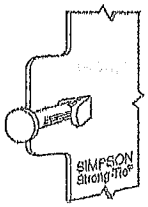

Double Shear Nailing Side View. Do not bend tab back.

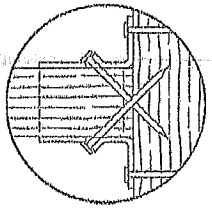

Double Shear Nailing Top View.

LICENSED PROFESSIONAL ENGINEER
4/3/2017
B. D. BUNTING
PROVINCE OF ONTARIO

UNITED STATES DESIGN

This technical bulletin is effective until June 30, 2019, and whole information available as of March 1, 2017. This information is updated periodically and should not be relied upon after June 30, 2019. Contact Simpson Strong-Tie for current information and limited warranty at www.strongtie.com.

© 2017 Simpson Strong-Tie Company Inc. T-SPECHHUS17 3/17 exp. 6/19

(800) 999-5099
strongtie.com