BRAMPTON
brampton.ca Flower City

Planning and Development Services
Building Division
8850 McLaughlin Road, Unit 1
Brampton, ON L6Y 5T1

CITY OF BRAMPTON – BUILDING DIVISION

ROOF TRUSSES

APPLICATION NO.:	19-567627 000 00 CM	FOLDER TYP.:	**CM**
DESCRIPTION OF PROJECT:	PLAN M2039	SUB TYP.:	**Semi Detached Dwelling**
BUILDERS NAME:	**GOLD PARK HOMES**		
PLAN NUMBER:		MODEL NAME:	**2017/SD-09**

CERTIFIED MODEL DOCUMENTS					
PAGES:	**DESCRIPTION OF DOCUMENTS**				
B	**ROOF TRUSS LAYOUTS & COMPONENTS:**				
	ELEVATION	DESCRIPTION:	COMMENTS		
2		.....			
3		.....			
		.....			
		.....			
		.....			
		.....			
ENTERED BY:	....			**DATE:**	yyyy/mm/dd

E19072226-E19072230
E19072240
E19072367-E19072368
E19112570-E19112580

All work shall conform to the Ontario Building Code O. Reg. 332/12 as amended

For conventional framing roof / cellings framing shall conform to OBC.9.23

ALPA-BARRIE

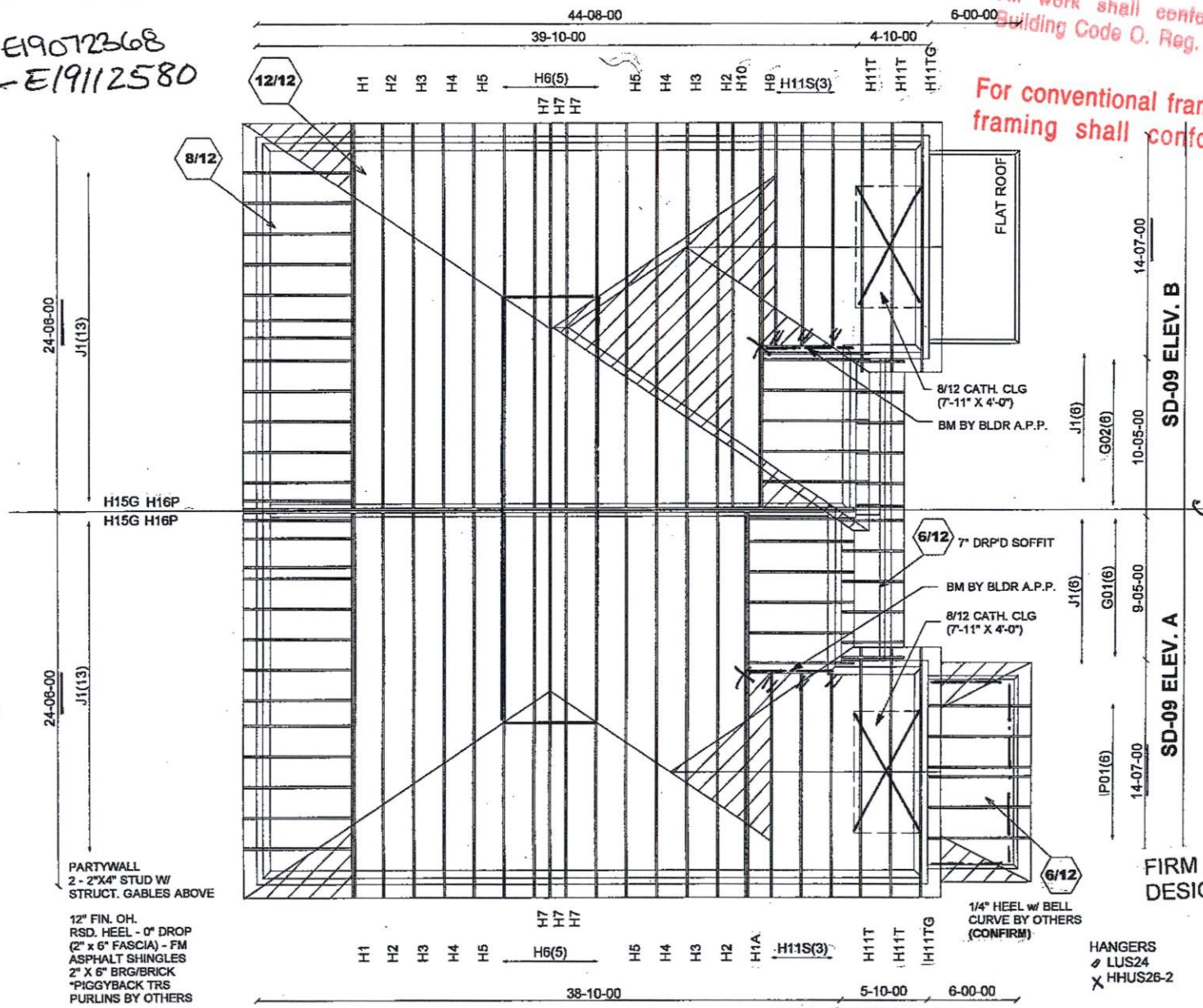

CITY OF BRAMPTON BUILDING DIVISION REVIEWED DEC 10 2019 BY MARY FRENETTE

FIRM BCIN 113884
DESIGNER BCIN 25593

THE GERSHWIN

Mitek V. 8.2.0

ALL CONVENTIONAL FRAMING TO CONFORM WITH PART 9 O.B.C. LATEST EDITION. ROOF RAFTERS THAT CROSS OVER TRUSSES TO BE 2X4 SPF #2 @ 24" O.C WITH A VERT. POST TO THE TRUSS UNDERNEATH AT EACH CROSS POINT. VERT. POSTS LONGER THAN 6' TO HAVE LATERAL BRACING SO THAT THE DISTANCE BETWEEN END POINTS & BETWEEN ROWS OF BRACING DOES NOT EXCEED 6'

CONVENTIONAL FRAMING BY OTHERS

Job Track: 39002	Builder / Location: GOLD PARK HOMES / BRAMPTON	Model / Elevation: SD-09 / A/B	
Layout ID: 313997	Project: MCLAUGHLIN AND MAYFIELD	THESE DRAWINGS CONSTITUTE THE PROPERTY OF ALPA ROOF TRUSSES INC., SHALL NOT BE REPRODUCED, PUBLISHED, OR REDISTRIBUTED IN ANY MANNER OR UTILIZED FOR ANY PURPOSE OTHER THAN THE MANUFACTURE OF TRUSSES BY ALPA ROOF TRUSSES INC AND WILL BE RETRACTED BY ALPA ROOF TRUSSES INC IF UTLILZED FOR ANY OTHER PURPOSE.	
Plan Log: 104423	Date: 10/23/2019 Designer: AMANDA		

EWP DESIGN INC.

(905) 832-2250 FAX (905) 832-0286

RESPONSIBILITIES AND SPECIFICATIONS

RESPONSIBILITIES

1. EWP DESIGN INC. is responsible for the design of trusses as individual components.
2. It is the responsibility of others to ascertain that the design loads utilized on each drawing meet or exceed the actual dead load imposed by the structure, the live load imposed by the intended use and the snow load imposed by local building code or authorities with jurisdictions.
3. All dimensions are to be verified by the owner, contractor, architect or other authorities with jurisdictions before truss fabrication.
4. EWP DESIGN INC. bears no responsibility for the erection of trusses. Persons erecting trusses are cautioned to seek professional advice regarding the temporary and permanent bracing for the system. Bracing shown on EWP DESIGN INC. drawing is specified for the truss as a component only and forms an integral part of the truss design.
5. It is the truss manufacturer's responsibility to ensure that trusses are manufactured in conformance with specifications of EWP DESIGN INC. as outlined below.

SPECIFICATIONS

1. Trusses designed by EWP DESIGN INC. conform to the relevant section of the Ontario Building Code of Canada (Part 9 or Part 4) or to the Canadian code for farm buildings, whichever applies to the building type, as indicated on the EWP DESIGN INC. drawings, and conform to the design procedures established by the Truss Plate Institute of Canada. Unit stresses used for truss designs are as per the edition of CSA-O86 shown on EWP DESIGN INC. drawings.
2. Lumber is to be the size, species and grade as specified on EWP DESIGN INC. drawings.
3. Moisture content of lumber shall not exceed 19% in service unless specified otherwise.
4. Metal connector plates shall be applied to both faces of truss at each joint and shall be positioned as specified.
5. Top chords of trusses are assumed to be continuously braced laterally by roof sheathing or by purlins at intervals not exceeding 12.5 times the thickness of top chord member.
6. Bottom chords shall be laterally braced at intervals not exceeding 3M (10') o.c., where rigid ceiling is not applied directly to the underside of chords.

THESE DRAWINGS CONSTITUTE THE PROPERTY OF EWP DESIGN INC., SHALL NOT BE REPRODUCED, PUBLISHED, OR REDISTRIBUTED IN ANY MANNER OR UTILIZED FOR ANY PURPOSE OTHER THAN THE MANUFACTURE OF TRUSSES BY THE ALPA LUMBER GROUP, AND WILL BE RETRACTED BY EWP DESIGN INC. IF UTILIZED FOR ANY OTHER PURPOSE.

JOB NAME	TRUSS NAME	QUANTITY	PLY	JOB DESC.		DRWG NO.
313997	G02	1	1	TRUSS DESC.	JT-39002	E-19112570

Alpa Roof Truss, Maple

Version 8.300 S Aug 9 2019 MiTek Industries, Inc. Mon Nov 11 13:33:03 2019 Page 1

ID:1djR6DYvLvIlXkyExRWgN1yQawr-RJEdYgoKEcvdN5Ed5xVG7qFa96Q7lqYAG1ctJ4yKFgU

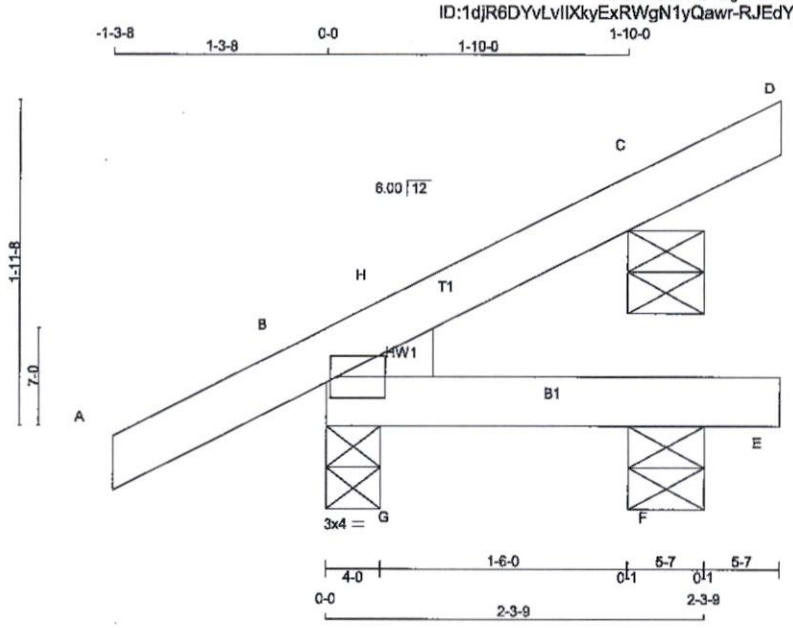

TOTAL WEIGHT = 6 X 9 = 55 lb [M]

LUMBER

N. L. G. A. RULES

CHORDS	SIZE		LUMBER	DESCR.
A - D	2x4	DRY	No.2	SPF
B - E	2x4	DRY	No.2	SPF

DRY: SEASONED LUMBER.

PLATES (table is in inches)

JT	TYPE	PLATES	W	LEN	Y	X
B	TMBH1-I	MT20	3.0	4.0	1.50	0.50

NOTE: Lateral brace(s) shown shall be 2x4 SPF #2

LICENSED PROFESSIONAL ENGINEER
11/11/2019
R. TURENNE
100157040
PROVINCE OF ONTARIO

DIMENSIONS, SUPPORTS AND LOADINGS SPECIFIED BY FABRICATOR TO BE VERIFIED BY BUILDING DESIGNER

BEARINGS

JT	FACTORED GROSS REACTION VERT	HORZ	MAXIMUM FACTORED GROSS REACTION DOWN	HORZ	UPLIFT	INPUT BRG IN-SX	REQRD BRG IN-SX	HEEL WEDGE
B	222	0	222	0	0	4-0	1-8	2x4 L
F	46	0	46	0	0	5-8	1-8	
C	137	0	137	0	0	5-8	5-8	

BEVELED PLATE OR SHIM REQUIRED TO PROVIDE FULL BEARING SURFACE WITH TRUSS CHORD AT JT(S): C

UNFACTORED REACTIONS

JT	1ST LCASE COMBINED	MAX./MIN. COMPONENT REACTIONS SNOW	LIVE	PERM.LIVE	WIND	DEAD	SOIL
B	155	111 / 0	0 / 0	0 / 0	0 / 0	44 / 0	0 / 0
F	35	10 / 0	0 / 0	0 / 0	0 / 0	25 / 0	0 / 0
C	95	73 / 0	0 / 0	0 / 0	0 / 0	22 / 0	0 / 0

BEARING MATERIAL TO BE SPF NO.2 OR BETTER AT JOINT(S) B, F, C

BRACING

TOP CHORD TO BE SHEATHED OR MAX. PURLIN SPACING = 6.25 FT.
MAX. UNBRACED BOTTOM CHORD LENGTH = 10.00 FT OR RIGID CEILING DIRECTLY APPLIED.

ALL PITCH BREAKS AND PERIMETER CORNER JOINTS MUST BE LATERALLY RESTRAINED.

LOADING

TOTAL LOAD CASES: (5)

CHORDS

MEMB. FR-TO	MAX. FORCE (LBS)	FACTORED VERT. LOAD LC1 (PLF) FROM	TO	MAX CSI (LC)	MAX. UNBRAC LENGTH
A- B	0 / 16	-84.9	-84.9	0.12 (5)	10.00
B- H	-15 / 0	-84.9	-84.9	0.01 (4)	6.25
H- C	0 / 3	-84.9	-84.9	0.04 (1)	10.00
C- D	-14 / 0	-84.9	-84.9	0.03 (1)	6.25
B- G	0 / 0	-18.5	-18.5	0.04 (1)	10.00
G- F	0 / 0	-18.5	-18.5	0.04 (1)	10.00
F- E	0 / 0	-18.5	-18.5	0.01 (4)	10.00

WEBS

MEMB. FR-TO	MAX. FORCE (LBS)	MAX CSI (LC)
G- H	-61 / 0	0.00 (1)

CANTILEVER ANALYSIS HAS BEEN CONSIDERED IN THIS DESIGN

DESIGN CRITERIA

SPECIFIED LOADS:

TOP CH.	LL	=	23.3	PSF
	DL	=	6.0	PSF
BOT CH.	LL	=	0.0	PSF
	DL	=	7.4	PSF
TOTAL LOAD		=	36.7	PSF

SPACING = 24.0 IN. C/C

THIS TRUSS IS DESIGNED FOR RESIDENTIAL OR SMALL BUILDING REQUIREMENTS OF PART 9, NBCC 2010, NBCC 2015

THIS DESIGN COMPLIES WITH:
- PART 9 OF BCBC 2018 , OBC 2012 , ABC 2019
- CSA 086-09, CSA 086-14
- TPIC 2011, TPIC 2014

(55 % OF 27.2 P.S.F. G.S.L. PLUS 8.4 P.S.F. RAIN LOAD) EQUALS 23.3 P.S.F. SPECIFIED ROOF LIVE LOAD

ALLOWABLE DEFL.(LL)= L/360 (0.19")
CALCULATED VERT. DEFL.(LL) = L/ 999 (0.00")
ALLOWABLE DEFL.(TL)= L/360 (0.19")
CALCULATED VERT. DEFL.(TL) = L/ 999 (0.00")

CANTILEVER DEFLECTION:
ALLOWABLE DEFL.(TL)= L/120 (0.19")
CALCULATED VERT. DEFL.(TL) = L/ 999 (0.00")

CSI: TC=0.12/1.00 (A-B:5) , BC=0.04/1.00 (B-G:1) , WB=0.00/1.00 (G-H:1) , SSI=0.09/1.00 (A-B:5)

DOL LUMBER=1.00 NAIL=1.00 LS BEND=1.10 COMP=1.10 SHEAR=1.10 TENS= 1.10

COMPANION LIVE LOAD FACTOR = 1.00

TRUSS PLATE MANUFACTURER IS NOT RESPONSIBLE FOR QUALITY CONTROL IN THE TRUSS MANUFACTURING PLANT .

NAIL VALUES

PLATE	GRIP(DRY) (PSI) MAX	MIN	SHEAR (PLI) MAX	MIN	SECTION (PLI) MAX	MIN
MT20	618	354	1667	788	1987	1656

PLATE PLACEMENT TOL. = 0.250 inches

PLATE ROTATION TOL. = 5.0 Deg.

JSI GRIP= 0.69 (B) (INPUT = 0.90)
JSI METAL= 0.04 (B) (INPUT = 1.00)

JOB NAME	TRUSS NAME	QUANTITY	PLY	JOB DESC.	DRWG NO.
313997	H1A		2	TRUSS DESC. JT-39002	E-19112571

Alpa Roof Truss, Maple

Version 8.300 S Aug 9 2019 MiTek Industries, Inc. Mon Nov 11 13:51:05 2019 Page 1

ID:1djR6DYvLvIlXkyExRWgN1yQawr-ITcgeev0Q2E6BNyaTAw?z?3MfGelG19R3Ni8HMyKFPa

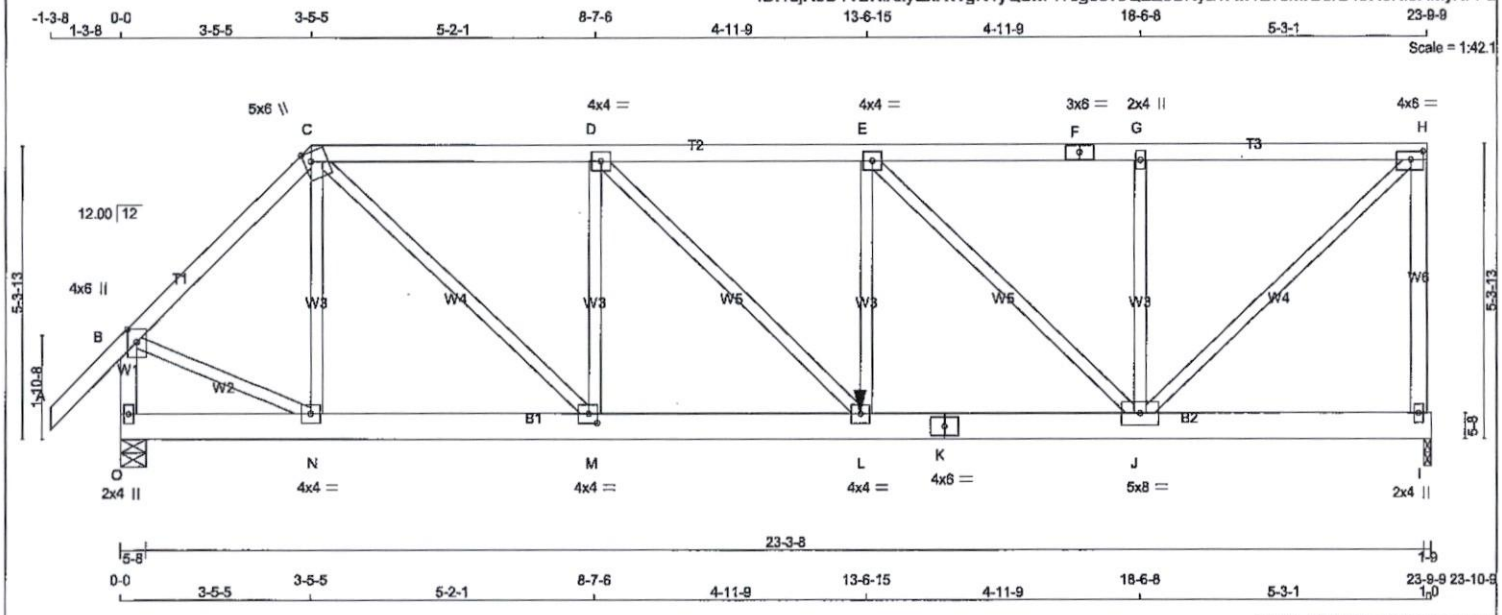

TOTAL WEIGHT = 2 X 120 = 240 lb [M]

LUMBER

N. L. G. A. RULES

CHORDS	SIZE		LUMBER	DESCR.
A - C	2x4	DRY	No.2	SPF
C - F	2x4	DRY	No.2	SPF
F - H	2x4	DRY	No.2	SPF
I - H	2x4	DRY	No.2	SPF
O - B	2x4	DRY	No.2	SPF
O - K	2x6	DRY	No.2	SPF
K - I	2x6	DRY	No.2	SPF
ALL WEBS EXCEPT	2x3	DRY	No.2	SPF

DRY: SEASONED LUMBER.

DESIGN CONSISTS OF 2 TRUSSES BUILT SEPARATELY THEN FASTENED TOGETHER AS FOLLOWS:

CHORDS	#ROWS	SURFACE SPACING (IN)	LOAD(PLF)
TOP CHORDS : (0.122"X3") SPIRAL NAILS			
A- C	1	12	TOP
C- F	1	12	SIDE(41.1)
F- H	1	12	SIDE(41.1)
H- I	1	12	TOP
O- B	1	12	TOP
BOTTOM CHORDS : (0.122"X3") SPIRAL NAILS			
O- K	2	12	SIDE(174.2)
K- I	2	12	SIDE(10.0)
WEBS : (0.122"X3") SPIRAL NAILS			
L- E	1	6	SIDE(113.5)
2x3	1	6	

NAILS TO BE DRIVEN FROM ONE SIDE ONLY.

GIRDER NAILING ASSUMES NAILED HANGERS ARE FASTENED WITH MIN. 3-0 INCH NAILS.

TOP - COMPONENTS ARE LOADED FROM THE TOP AND MUST BE PLACED ON TOP EDGE OF ALL PLIES FOR THE LOAD TO BE TRANSFERRED TO EACH PLY.

NOTE: Lateral brace(s) shown shall be 2x4 SPF #2

LICENSED PROFESSIONAL ENGINEER
11/11/2019
R. TURENNE
100157040
PROVINCE OF ONTARIO

DIMENSIONS, SUPPORTS AND LOADINGS SPECIFIED BY FABRICATOR TO BE VERIFIED BY BUILDING DESIGNER

BEARINGS

JT	FACTORED GROSS REACTION VERT	HORZ	MAXIMUM FACTORED GROSS REACTION DOWN	HORZ	UPLIFT	INPUT BRG IN-SX	REQRD BRG IN-SX
I	2663	0	2663	0	0	1-9	1-8
O	2041	0	2041	0	0	5-8	1-8

UNFACTORED REACTIONS

JT	1ST LCASE COMBINED	MAX./MIN. COMPONENT REACTIONS SNOW	LIVE	PERM.LIVE	WIND	DEAD	SOIL
I	1890	1200 / 0	0 / 0	0 / 0	0 / 0	690 / 0	0 / 0
O	1447	932 / 0	0 / 0	0 / 0	0 / 0	515 / 0	0 / 0

BEARING MATERIAL TO BE SPF NO.2 OR BETTER AT JOINT(S) I, O

BRACING

TOP CHORD TO BE SHEATHED OR MAX. PURLIN SPACING = 4.88 FT.
MAX. UNBRACED BOTTOM CHORD LENGTH = 10.00 FT OR RIGID CEILING DIRECTLY APPLIED.

ALL PITCH BREAKS AND PERIMETER CORNER JOINTS MUST BE LATERALLY RESTRAINED.

LOADING

TOTAL LOAD CASES: (4)

CHORDS

MEMB. FR-TO	MAX. FACTORED FORCE (LBS)	FACTORED VERT. LOAD LC1 (PLF) FROM	TO	MAX CSI (LC)	MAX. UNBRAC LENGTH
A- B	0 / 42	-84.9	-84.9	0.07 (1)	10.00
B- C	-1766 / 0	-84.9	-84.9	0.11 (1)	6.25
C- D	-2620 / 0	-84.9	-84.9	0.20 (1)	5.41
D- E	-3384 / 0	-84.9	-84.9	0.22 (1)	4.88
E- F	-2366 / 0	-167.1	-167.1	0.40 (1)	5.31
F- G	-2366 / 0	-167.1	-167.1	0.40 (1)	5.31
G- H	-2366 / 0	-167.1	-167.1	0.40 (1)	5.31
I- H	-2574 / 0	0.0	0.0	0.59 (1)	7.07
O- B	-2023 / 0	0.0	0.0	0.12 (1)	7.75
D- N	0 / 0	-18.5	-18.5	0.02 (4)	10.00
N- M	0 / 1235	-18.5	-18.5	0.10 (1)	10.00
M- L	0 / 2620	-18.5	-18.5	0.20 (1)	10.00
L- K	0 / 3384	-36.4	-36.4	0.27 (1)	10.00
K- J	0 / 3384	-36.4	-36.4	0.27 (1)	10.00
J- I	0 / 0	-36.4	-36.4	0.05 (4)	10.00

WEBS

MEMB. FR-TO	MAX. FACTORED FORCE (LBS)	MAX CSI (LC)
N- C	-402 / 0	0.08 (1)
B- N	0 / 1342	0.17 (1)
C- M	0 / 1910	0.24 (1)
M- D	-1218 / 0	0.25 (1)
D- L	0 / 1079	0.13 (1)
L- E	0 / 447	0.06 (1)
E- J	-1438 / 0	0.66 (1)
J- G	-999 / 0	0.20 (1)
J- H	0 / 3247	0.40 (1)

FACTORED CONCENTRATED LOADS (LBS)

JT	LOC.	LC1	MAX-	MAX+	FACE	DIR.	TYPE	HEEL	CONN.
L	13-5-9	-1103	-1103	---	FRONT	VERT	TOTAL	---	C1

DESIGN CRITERIA

*** SPECIAL LOADS ANALYSIS ***
GEOMETRY AND/OR BASIC LOADS CHANGED BY USER.
LOADS WERE DERIVED FROM USER INPUT
NO FURTHER MODIFICATIONS WERE MADE

SPECIFIED LOADS:

TOP CH.	LL	=	23.3	PSF
	DL	=	6.0	PSF
BOT CH.	LL	=	0.0	PSF
	DL	=	7.4	PSF
TOTAL LOAD		=	36.7	PSF

SPACING = 24.0 IN. C/C

LOADING IN FLAT SECTION BASED ON A SLOPE OF 2.00/12 MINIMUM

GIRDER TYPE: CPrimeHip
LEFT SETBACK = 3-5-5
RIGHT SETBACK = 0-0
END SETBACK = 5-10-8
END WALL WIDTH = 0-0
CORNER FRAMING TYPE: CONVENTIONAL
END JACK TYPE: CONVENTIONAL
APPLIED TO FRONT SIDE
- ADDT'L LOADS BASED ON 55 % OF GSL.
LOADS APPLIED TO FIRST 10-5-0 OF SPAN MEASURED FROM THE RIGHT.

*** NON STANDARD GIRDER ***
ADDT'L USER-DEFINED LOADS APPLIED TO ALL LOAD CASES.

THIS TRUSS IS DESIGNED FOR RESIDENTIAL OR SMALL BUILDING REQUIREMENTS OF PART 9, NBCC 2010, NBCC 2015

THIS DESIGN COMPLIES WITH:
- PART 9 OF BCBC 2018 , OBC 2012 , ABC 2019
- CSA 086-09, CSA 086-14
- TPIC 2011, TPIC 2014

(55 % OF 27.2 P.S.F. G.S.L. PLUS 8.4 P.S.F. RAIN LOAD) EQUALS 23.3 P.S.F. SPECIFIED ROOF LIVE LOAD

ALLOWABLE DEFL.(LL)= L/360 (0.79")
CALCULATED VERT. DEFL.(LL) = L/ 999 (0.05")
ALLOWABLE DEFL.(TL)= L/360 (0.79")
CALCULATED VERT. DEFL.(TL) = L/ 999 (0.10")

CSI: TC=0.59/1.00 (H-I:1) , BC=0.27/1.00 (J-L:1) , WB=0.66/1.00 (E-J:1) , SSI=0.23/1.00 (G-H:1)

DOL LUMBER=1.00 NAIL=1.00 LS BEND=1.00 COMP=1.00 SHEAR=1.00 TENS= 1.00

COMPANION LIVE LOAD FACTOR = 1.00

AUTOSOLVE RIGHT HEEL ONLY

TRUSS PLATE MANUFACTURER IS NOT RESPONSIBLE FOR QUALITY CONTROL IN THE TRUSS MANUFACTURING PLANT .

CONTINUED ON PAGE 2

JOB NAME	TRUSS NAME	QUANTITY	PLY	JOB DESC.	DRWG NO.
313997	H1A		2	TRUSS DESC. JT-39002	E-19112571(2)

PLATES (table is in inches)

JT	TYPE	PLATES	W	LEN	Y	X
B	TMVW+p	MT20	4.0	6.0	2.75	2.00
C	TTWW+m	MT20	5.0	6.0	2.00	1.50
D	TMWW-t	MT20	4.0	4.0		
E	TMWW-t	MT20	4.0	4.0		
F	TS-t	MT20	3.0	6.0		
G	TMW+w	MT20	2.0	4.0		
H	TMVW-t	MT20	4.0	6.0	1.75	2.75
I	BMV1+p	MT20	2.0	4.0		
J	BMWWW-t	MT20	5.0	8.0		
K	BS-t	MT20	4.0	6.0		
L	BMWW-t	MT20	4.0	4.0		
M	BMWW-t	MT20	4.0	4.0	2.00	1.75
N	BMWW-t	MT20	4.0	4.0		
O	BMV1+p	MT20	2.0	4.0		

NOTE: Lateral brace(s) shown shall be 2x4 SPF #2

LICENSED PROFESSIONAL ENGINEER
11/11/2019
R. TURENNE
100157040
PROVINCE OF ONTARIO

NAIL VALUES

PLATE	GRIP(DRY) (PSI) MAX	MIN	SHEAR (PLI) MAX	MIN	SECTION (PLI) MAX	MIN
MT20	618	354	1667	788	1987	1656

PLATE PLACEMENT TOL. = 0.250 inches

PLATE ROTATION TOL. = 5.0 Deg.

JSI GRIP= 0.88 (H) (INPUT = 0.90)
JSI METAL= 0.45 (K) (INPUT = 1.00)

JOB NAME	TRUSS NAME	QUANTITY	PLY	JOB DESC.	DRWG NO.
313997	H9		2	TRUSS DESC. JT-39002	E-19112572

Alpa Roof Truss, Maple

Version 8.300 S Aug 9 2019 MiTek Industries, Inc. Mon Nov 11 13:50:01 2019 Page 1

ID:1djR6DYvLvIlXkyExRWgN1yQawr-d9kTCm7tUOABVY3Hjkm_NVPSiTI4HAr0LQCI23yKFQa

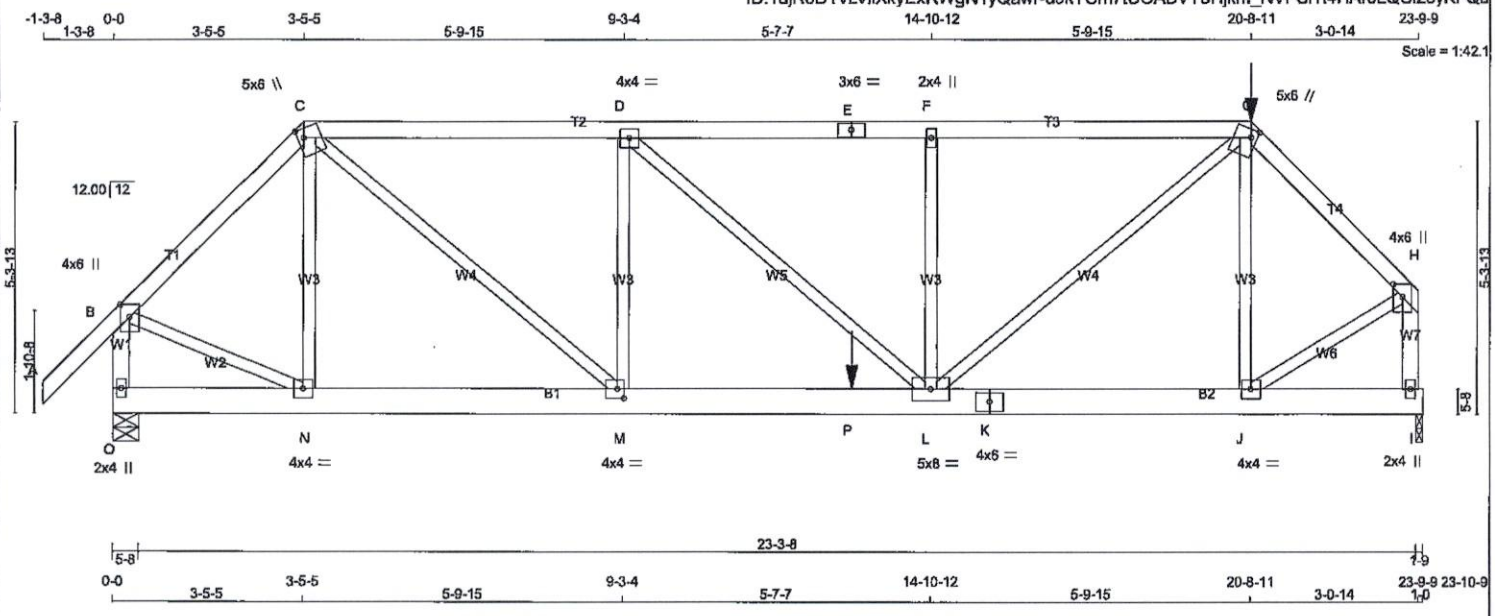

TOTAL WEIGHT = 2 X 117 = 234 lb [M]

LUMBER

N. L. G. A. RULES

CHORDS	SIZE		LUMBER	DESCR.
A - C	2x4	DRY	No.2	SPF
C - E	2x4	DRY	No.2	SPF
E - G	2x4	DRY	No.2	SPF
G - H	2x4	DRY	No.2	SPF
O - B	2x4	DRY	No.2	SPF
I - H	2x4	DRY	No.2	SPF
O - K	2x6	DRY	No.2	SPF
K - I	2x6	DRY	No.2	SPF
ALL WEBS EXCEPT	2x3	DRY	No.2	SPF

DRY: SEASONED LUMBER.

DESIGN CONSISTS OF 2 TRUSSES BUILT SEPARATELY THEN FASTENED TOGETHER AS FOLLOWS:

CHORDS	#ROWS	SURFACE SPACING (IN)	LOAD(PLF)
TOP CHORDS : (0.122"X3") SPIRAL NAILS			
A- C	1	12	TOP
C- E	1	12	TOP
E- G	1	12	SIDE(41.1)
G- H	1	12	SIDE(61.0)
O- B	1	12	TOP
I- H	1	12	TOP
BOTTOM CHORDS : (0.122"X3") SPIRAL NAILS			
O- K	2	12	SIDE(10.0)
K- I	2	12	SIDE(10.0)
WEBS : (0.122"X3") SPIRAL NAILS			
J- G	1	6	SIDE(9.9)
2x3	1	6	

NAILS TO BE DRIVEN FROM ONE SIDE ONLY.

GIRDER NAILING ASSUMES NAILED HANGERS ARE FASTENED WITH MIN. 3-0 INCH NAILS.

TOP - COMPONENTS ARE LOADED FROM THE TOP AND MUST BE PLACED ON TOP EDGE OF ALL PLIES FOR THE LOAD TO BE TRANSFERRED TO EACH PLY.

NOTE: Lateral brace(s) shown shall be 2x4 SPF #2

LICENSED PROFESSIONAL ENGINEER
11/11/2019
R. TURENNE
100157040
PROVINCE OF ONTARIO

DIMENSIONS, SUPPORTS AND LOADINGS SPECIFIED BY FABRICATOR TO BE VERIFIED BY BUILDING DESIGNER

BEARINGS

JT	FACTORED GROSS REACTION VERT	HORZ	MAXIMUM FACTORED GROSS REACTION DOWN	HORZ	UPLIFT	INPUT BRG IN-SX	REQRD BRG IN-SX
O	2061	0	2061	0	0	5-8	1-8
I	2599	0	2599	0	0	1-9	1-8

UNFACTORED REACTIONS

JT	1ST LCASE COMBINED	MAX./MIN. COMPONENT REACTIONS SNOW	LIVE	PERM.LIVE	WIND	DEAD	SOIL
O	1461	941 / 0	0 / 0	0 / 0	0 / 0	519 / 0	0 / 0
I	1846	1165 / 0	0 / 0	0 / 0	0 / 0	681 / 0	0 / 0

BEARING MATERIAL TO BE SPF NO.2 OR BETTER AT JOINT(S) O, I

BRACING

TOP CHORD TO BE SHEATHED OR MAX. PURLIN SPACING = 4.55 FT.
MAX. UNBRACED BOTTOM CHORD LENGTH = 10.00 FT OR RIGID CEILING DIRECTLY APPLIED.

ALL PITCH BREAKS AND PERIMETER CORNER JOINTS MUST BE LATERALLY RESTRAINED.

LOADING

TOTAL LOAD CASES: (4)

CHORDS

MEMB. FR-TO	MAX. FACTORED FORCE (LBS)	FACTORED VERT. LOAD (PLF) FROM	TO	LC1 MAX CSI (LC)	MAX. UNBRAC LENGTH
A- B	0 / 42	-84.9	-84.9	0.07 (1)	10.00
B- C	-1767 / 0	-84.9	-84.9	0.11 (1)	6.25
C- D	-2850 / 0	-84.9	-84.9	0.25 (1)	5.19
D- E	-3375 / 0	-84.9	-84.9	0.44 (1)	4.59
E- F	-3375 / 0	-167.1	-167.1	0.44 (1)	4.59
F- G	-3374 / 0	-167.1	-167.1	0.47 (1)	4.56
G- H	-2167 / 0	-84.9	-84.9	0.10 (1)	5.94
O- B	-2025 / 0	0.0	0.0	0.12 (1)	7.75
I- H	-2538 / 0	0.0	0.0	0.16 (1)	7.11
O- N	0 / 0	-18.5	-18.5	0.01 (4)	10.00
N- M	0 / 1234	-18.5	-18.5	0.18 (1)	10.00
M- P	0 / 2850	-18.5	-18.5	0.50 (1)	10.00
P- L	0 / 2850	-36.4	-36.4	0.50 (1)	10.00
L- K	0 / 1508	-36.4	-36.4	0.25 (1)	10.00
K- J	0 / 1508	-36.4	-36.4	0.25 (1)	10.00
J- I	0 / 0	-36.4	-36.4	0.03 (4)	10.00

WEBS

MEMB. FR-TO	MAX. FACTORED FORCE (LBS)	MAX CSI (LC)
N- C	-474 / 0	0.10 (1)
J- G	-784 / 0	0.16 (1)
B- N	0 / 1343	0.17 (1)
J- H	0 / 1755	0.22 (1)
C- M	0 / 2113	0.26 (1)
M- D	-948 / 0	0.19 (1)
D- L	0 / 698	0.09 (1)
L- F	-932 / 0	0.19 (1)
L- G	0 / 2441	0.30 (1)

FACTORED CONCENTRATED LOADS (LBS)

JT	LOC.	LC1	MAX-	MAX+	FACE	DIR.	TYPE	HEEL	CONN.
G	20-8-11	-195	-195	—	FRONT	VERT	TOTAL	—	C1
P	13-5-9	-1103	-1103	—	FRONT	VERT	TOTAL	—	C1

DESIGN CRITERIA

*** SPECIAL LOADS ANALYSIS ***
GEOMETRY AND/OR BASIC LOADS CHANGED BY USER.
LOADS WERE DERIVED FROM USER INPUT
NO FURTHER MODIFICATIONS WERE MADE

SPECIFIED LOADS:

TOP CH.	LL =	23.3	PSF
	DL =	6.0	PSF
BOT CH.	LL =	0.0	PSF
	DL =	7.4	PSF
TOTAL LOAD	=	36.7	PSF

SPACING = 24.0 IN. C/C

LOADING IN FLAT SECTION BASED ON A SLOPE OF 2.00/12 MINIMUM

GIRDER TYPE: CPrimeHip
LEFT SETBACK = 3-5-5
RIGHT SETBACK = 3-1-14
END SETBACK = 5-10-8
END WALL WIDTH = 0-0
CORNER FRAMING TYPE: CONVENTIONAL
END JACK TYPE: CONVENTIONAL
APPLIED TO FRONT SIDE
- ADDT'L LOADS BASED ON 55 % OF GSL. LOADS APPLIED TO FIRST 10-5-0 OF SPAN MEASURED FROM THE RIGHT.

*** NON STANDARD GIRDER ***
ADDT'L USER-DEFINED LOADS APPLIED TO ALL LOAD CASES.

THIS TRUSS IS DESIGNED FOR RESIDENTIAL OR SMALL BUILDING REQUIREMENTS OF PART 9, NBCC 2010, NBCC 2015

THIS DESIGN COMPLIES WITH:
- PART 9 OF BCBC 2018 , OBC 2012 , ABC 2019
- CSA 086-09, CSA 086-14
- TPIC 2011, TPIC 2014

(55 % OF 27.2 P.S.F. G.S.L. PLUS 8.4 P.S.F. RAIN LOAD) EQUALS 23.3 P.S.F. SPECIFIED ROOF LIVE LOAD

ALLOWABLE DEFL.(LL)= L/360 (0.79")
CALCULATED VERT. DEFL.(LL) = L/ 999 (0.07")
ALLOWABLE DEFL.(TL)= L/360 (0.79")
CALCULATED VERT. DEFL.(TL) = L/ 999 (0.13")

CSI: TC=0.47/1.00 (F-G:1) , BC=0.50/1.00 (L-M:1) , WB=0.30/1.00 (G-L:1) , SSI=0.31/1.00 (L-M:1)

DOL LUMBER=1.00 NAIL=1.00 LS BEND=1.00 COMP=1.00 SHEAR=1.00 TENS= 1.00

COMPANION LIVE LOAD FACTOR = 1.00

TRUSS PLATE MANUFACTURER IS NOT RESPONSIBLE FOR QUALITY CONTROL IN THE TRUSS MANUFACTURING PLANT .

CONTINUED ON PAGE 2

JOB NAME	TRUSS NAME	QUANTITY	PLY	JOB DESC.	DRWG NO.
313997	H9		2	TRUSS DESC. JT-39002	E-19112572(2)

Alpa Roof Truss, Maple

Version 8.300 S Aug 9 2019 MiTek Industries, Inc. Mon Nov 11 13:50:01 2019 Page 2

ID:1djR6DYvLvIlXkyExRWgN1yQawr-d9kTCm7tUOABVY3Hjkm_NVPSiTI4HAr0LQCI23yKFQa

PLATES (table is in inches)

JT	TYPE	PLATES	W	LEN	Y	X
B	TMVW+p	MT20	4.0	6.0	2.75	2.00
C	TTWW+m	MT20	5.0	6.0	2.00	1.25
D	TMWW-t	MT20	4.0	4.0		
E	TS-t	MT20	3.0	6.0		
F	TMW+w	MT20	2.0	4.0		
G	TTWW+m	MT20	5.0	6.0	1.75	1.25
H	TMVW+p	MT20	4.0	6.0	2.75	2.00
I	BMV1+p	MT20	2.0	4.0		
J	BMWW-t	MT20	4.0	4.0		
K	BS-t	MT20	4.0	6.0		
L	BMWWW-t	MT20	5.0	8.0		
M	BMWW-t	MT20	4.0	4.0	2.00	1.50
N	BMWW-t	MT20	4.0	4.0		
O	BMV1+p	MT20	2.0	4.0		

NAIL VALUES

PLATE	GRIP(DRY) (PSI)		SHEAR (PLI)		SECTION (PLI)	
	MAX	MIN	MAX	MIN	MAX	MIN
MT20	618	354	1667	788	1987	1656

PLATE PLACEMENT TOL. = 0.250 inches

PLATE ROTATION TOL. = 5.0 Deg.

JSI GRIP= 0.90 (J) (INPUT = 0.90)
JSI METAL= 0.42 (H) (INPUT = 1.00)

NOTE: Lateral brace(s) shown shall be 2x4 SPF #2

LICENSED PROFESSIONAL ENGINEER
11/11/2019
R. TURENNE
100157040
PROVINCE OF ONTARIO

JOB NAME	TRUSS NAME	QUANTITY	PLY	JOB DESC.	DRWG NO.
313997	H10		1	TRUSS DESC. JT-39002	E-19112573

Alpa Roof Truss, Maple

Version 8.300 S Aug 9 2019 MiTek Industries, Inc. Mon Nov 11 13:47:50 2019 Page 1

ID:1djR6DYvLvIlXkyExRWgN1yQawr-zyKyjzXiL8gmIPY6YjwGZtUy7f464tSkDXzJx9yKFSd

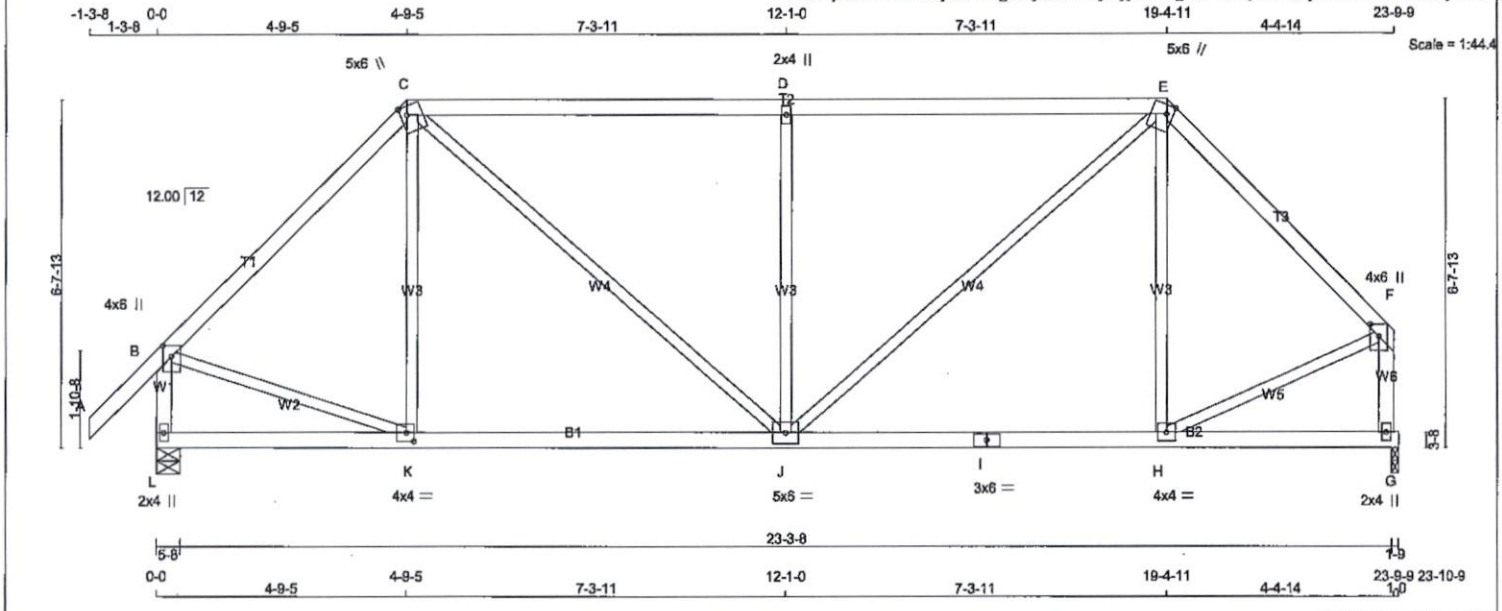

TOTAL WEIGHT = 103 lb

[M]

LUMBER

N. L. G. A. RULES

CHORDS	SIZE		LUMBER	DESCR.
A - C	2x4	DRY	No.2	SPF
C - E	2x4	DRY	No.2	SPF
E - F	2x4	DRY	No.2	SPF
L - B	2x4	DRY	No.2	SPF
G - F	2x4	DRY	No.2	SPF
L - I	2x4	DRY	No.2	SPF
I - G	2x4	DRY	No.2	SPF
ALL WEBS EXCEPT	2x3	DRY	No.2	SPF

DRY: SEASONED LUMBER.

PLATES (table is in inches)

JT	TYPE	PLATES	W	LEN	Y	X
B	TMVW+p	MT20	4.0	6.0	2.50	2.00
C	TTWW+m	MT20	5.0	6.0	2.00	1.50
D	TMW+w	MT20	2.0	4.0		
E	TTWW+m	MT20	5.0	6.0	2.00	1.50
F	TMVW+p	MT20	4.0	6.0	2.75	2.00
G	BMV1+p	MT20	2.0	4.0		
H	BMWW-t	MT20	4.0	4.0		
I	BS-t	MT20	3.0	6.0		
J	BMWWW-t	MT20	5.0	6.0		
K	BMWW-t	MT20	4.0	4.0	2.00	1.75
L	BMV1+p	MT20	2.0	4.0		

NOTE: Lateral brace(s) shown shall be 2x4 SPF #2

LICENSED PROFESSIONAL ENGINEER
11/11/2019
R. TURENNE
100157040
PROVINCE OF ONTARIO

DIMENSIONS, SUPPORTS AND LOADINGS SPECIFIED BY FABRICATOR TO BE VERIFIED BY BUILDING DESIGNER

BEARINGS

JT	FACTORED GROSS REACTION VERT	HORZ	MAXIMUM FACTORED GROSS REACTION DOWN	HORZ	UPLIFT	INPUT BRG IN-SX	REQRD BRG IN-SX
L	1348	0	1348	0	0	5-8	2-0
G	1230	0	1230	0	0	1-9	1-8

UNFACTORED REACTIONS

JT	1ST LCASE COMBINED	MAX./MIN. COMPONENT REACTIONS SNOW	LIVE	PERM.LIVE	WIND	DEAD	SOIL
L	955	619 / 0	0 / 0	0 / 0	0 / 0	336 / 0	0 / 0
G	873	554 / 0	0 / 0	0 / 0	0 / 0	319 / 0	0 / 0

BEARING MATERIAL TO BE SPF NO.2 OR BETTER AT JOINT(S) L, G

BRACING

TOP CHORD TO BE SHEATHED OR MAX. PURLIN SPACING = 4.14 FT.
MAX. UNBRACED BOTTOM CHORD LENGTH = 10.00 FT OR RIGID CEILING DIRECTLY APPLIED.

ALL PITCH BREAKS AND PERIMETER CORNER JOINTS MUST BE LATERALLY RESTRAINED.

LOADING

TOTAL LOAD CASES: (4)

CHORDS

MEMB. FR-TO	MAX. FACTORED FORCE (LBS)	FACTORED VERT. LOAD LC1 (PLF) FROM	TO	MAX CSI (LC)	MAX. UNBRAC LENGTH
A- B	0 / 42	-84.9	-84.9	0.12 (1)	10.00
B- C	-1072 / 0	-84.9	-84.9	0.39 (1)	5.60
C- D	-1249 / 0	-84.9	-84.9	0.90 (1)	4.14
D- E	-1249 / 0	-84.9	-84.9	0.90 (1)	4.14
E- F	-1011 / 0	-84.9	-84.9	0.32 (1)	5.81
L- B	-1317 / 0	0.0	0.0	0.15 (1)	7.05
G- F	-1203 / 0	0.0	0.0	0.15 (1)	7.29
L- K	0 / 0	-18.5	-18.5	0.16 (4)	10.00
K- J	0 / 754	-18.5	-18.5	0.27 (4)	10.00
J- I	0 / 709	-18.5	-18.5	0.26 (4)	10.00
I- H	0 / 709	-18.5	-18.5	0.26 (4)	10.00
H- G	0 / 0	-18.5	-18.5	0.15 (4)	10.00

WEBS

MEMB. FR-TO	MAX. FACTORED FORCE (LBS)	MAX CSI (LC)
K- C	-111 / 50	0.08 (1)
C- J	0 / 656	0.15 (1)
J- D	-761 / 0	0.56 (1)
J- E	0 / 714	0.16 (1)
H- E	-177 / 23	0.13 (1)
B- K	0 / 791	0.18 (1)
H- F	0 / 772	0.17 (1)

DESIGN CRITERIA

SPECIFIED LOADS:

TOP CH.	LL =	23.3	PSF
	DL =	6.0	PSF
BOT CH.	LL =	0.0	PSF
	DL =	7.4	PSF
TOTAL LOAD	=	36.7	PSF

SPACING = 24.0 IN. C/C

LOADING IN FLAT SECTION BASED ON A SLOPE OF 2.00/12 MINIMUM

THIS TRUSS IS DESIGNED FOR RESIDENTIAL OR SMALL BUILDING REQUIREMENTS OF PART 9, NBCC 2010, NBCC 2015

THIS DESIGN COMPLIES WITH:
- PART 9 OF BCBC 2018 , OBC 2012 , ABC 2019
- CSA 086-09, CSA 086-14
- TPIC 2011, TPIC 2014

(55 % OF 27.2 P.S.F. G.S.L. PLUS 8.4 P.S.F. RAIN LOAD) EQUALS 23.3 P.S.F. SPECIFIED ROOF LIVE LOAD

ALLOWABLE DEFL.(LL)= L/360 (0.79")
CALCULATED VERT. DEFL.(LL) = L/ 999 (0.04")
ALLOWABLE DEFL.(TL)= L/360 (0.79")
CALCULATED VERT. DEFL.(TL) = L/ 999 (0.09")

CSI: TC=0.90/1.00 (D-E:1) , BC=0.27/1.00 (J-K:4) , WB=0.58/1.00 (D-J:1) , SSI=0.30/1.00 (C-D:1)

DOL LUMBER=1.00 NAIL=1.00 LS BEND=1.10 COMP=1.10 SHEAR=1.10 TENS= 1.10

COMPANION LIVE LOAD FACTOR = 1.00

TRUSS PLATE MANUFACTURER IS NOT RESPONSIBLE FOR QUALITY CONTROL IN THE TRUSS MANUFACTURING PLANT .

NAIL VALUES

PLATE	GRIP(DRY) (PSI) MAX	MIN	SHEAR (PLI) MAX	MIN	SECTION (PLI) MAX	MIN
MT20	618	354	1667	788	1987	1656

PLATE PLACEMENT TOL. = 0.250 inches

PLATE ROTATION TOL. = 5.0 Deg.

JSI GRIP= 0.85 (H) (INPUT = 0.90)
JSI METAL= 0.48 (B) (INPUT = 1.00)

JOB NAME	TRUSS NAME	QUANTITY	PLY	JOB DESC.	DRWG NO.
313997	H11S	1	1	TRUSS DESC. JT-39002	E-19112574

Alpa Roof Truss, Maple

Version 8.300 S Aug 9 2019 MiTek Industries, Inc. Mon Nov 11 13:32:12 2019 Page 1
ID:1djR6DYvLvIlXkyExRWgN1yQawr-QVeLrEBKFxUsmFqqbj5lY3dpBYyfJgofXclh1XylKFhH

Scale = 1:58.7

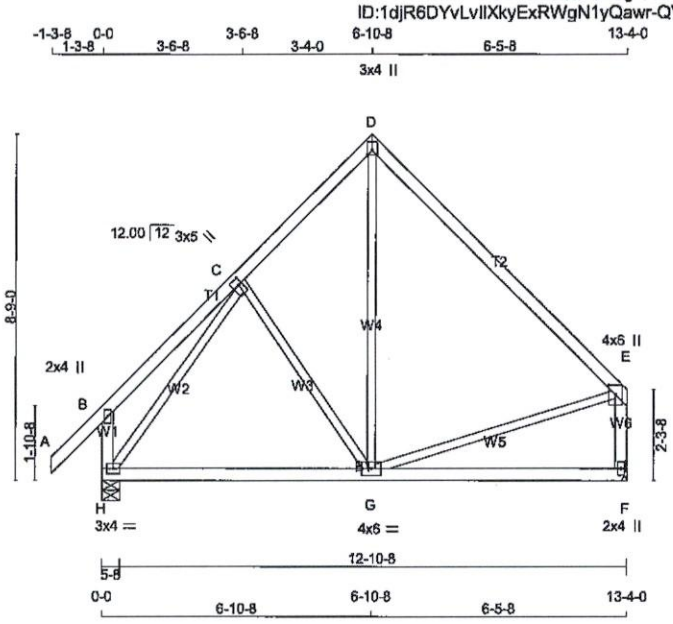

TOTAL WEIGHT = 6 X 64 = 385 lb

[M][F]

LUMBER

N. L. G. A. RULES

CHORDS	SIZE		LUMBER	DESCR.
A - D	2x4	DRY	No.2	SPF
D - E	2x4	DRY	2100F 1.8E	SPF
H - B	2x4	DRY	No.2	SPF
F - E	2x4	DRY	No.2	SPF
H - F	2x4	DRY	No.2	SPF
ALL WEBS EXCEPT	2x3	DRY	No.2	SPF

DRY: SEASONED LUMBER.

PLATES (table is in inches)

JT	TYPE	PLATES	W	LEN	Y	X
B	TMV+p	MT20	2.0	4.0		
C	TMWW+t	MT20	3.0	5.0	2.00	1.00
D	TTW+p	MT20	3.0	4.0	Edge	
E	TMVW+p	MT20	4.0	6.0	2.75	2.00
F	BMV1+p	MT20	2.0	4.0		
G	BMWWW-t	MT20	4.0	6.0		
H	BMVW1-t	MT20	3.0	4.0		

Edge - INDICATES REFERENCE CORNER OF PLATE TOUCHES EDGE OF CHORD.

NOTE: Lateral brace(s) shown shall be 2x4 SPF #2

LICENSED PROFESSIONAL ENGINEER
11/11/2019
R. TURENNE
100157040
PROVINCE OF ONTARIO

DIMENSIONS, SUPPORTS AND LOADINGS SPECIFIED BY FABRICATOR TO BE VERIFIED BY BUILDING DESIGNER

BEARINGS

JT	FACTORED GROSS REACTION VERT	HORZ	MAXIMUM FACTORED GROSS REACTION DOWN	HORZ	UPLIFT	INPUT BRG IN-SX	REQRD BRG IN-SX
F	689	0	689	0	0	MECHANICAL	
H	807	0	807	0	0	5-8	1-8

A SUITABLE HANGER/MECHANICAL CONNECTION IS REQUIRED AT JOINT F. MINIMUM BEARING LENGTH AT JOINT F = 1-8.

UNFACTORED REACTIONS

MAX./MIN. COMPONENT REACTIONS

JT	1ST LCASE COMBINED	SNOW	LIVE	PERM.LIVE	WIND	DEAD	SOIL
F	489	310 / 0	0 / 0	0 / 0	0 / 0	179 / 0	0 / 0
H	571	375 / 0	0 / 0	0 / 0	0 / 0	195 / 0	0 / 0

BEARING MATERIAL TO BE SPF NO.2 OR BETTER AT JOINT(S) H

BRACING

TOP CHORD TO BE SHEATHED OR MAX. PURLIN SPACING = 6.25 FT.
MAX. UNBRACED BOTTOM CHORD LENGTH = 10.00 FT OR RIGID CEILING DIRECTLY APPLIED.

ALL PITCH BREAKS AND PERIMETER CORNER JOINTS MUST BE LATERALLY RESTRAINED.

LOADING

TOTAL LOAD CASES: (4)

CHORDS

MEMB. FR-TO	MAX. FACTORED FORCE (LBS)	FACTORED VERT. LOAD LC1 (PLF) FROM	TO	MAX CSI (LC)	MAX. UNBRAC LENGTH
A- B	0 / 42	-84.9	-84.9	0.12 (1)	10.00
B- C	0 / 24	-84.9	-84.9	0.16 (1)	10.00
C- D	-427 / 0	-84.9	-84.9	0.13 (1)	6.25
D- E	-403 / 0	-84.9	-84.9	0.30 (1)	6.25
H- B	-228 / 0	0.0	0.0	0.03 (1)	7.81
F- E	-645 / 0	0.0	0.0	0.08 (1)	7.81
H- G	0 / 366	-18.5	-18.5	0.27 (4)	10.00
G- F	0 / 0	-18.5	-18.5	0.24 (4)	10.00

WEBS

MEMB. FR-TO	MAX. FACTORED FORCE (LBS)	MAX CSI (LC)
C- G	-140 / 0	0.09 (1)
G- D	0 / 182	0.05 (4)
H- C	-644 / 0	0.39 (1)
G- E	0 / 298	0.07 (1)

DESIGN CRITERIA

SPECIFIED LOADS:

TOP CH.	LL	=	23.3	PSF
	DL	=	6.0	PSF
BOT CH.	LL	=	0.0	PSF
	DL	=	7.4	PSF
TOTAL LOAD		=	36.7	PSF

SPACING = 24.0 IN. C/C

THIS TRUSS IS DESIGNED FOR RESIDENTIAL OR SMALL BUILDING REQUIREMENTS OF PART 9, NBCC 2010, NBCC 2015

THIS DESIGN COMPLIES WITH:
- PART 9 OF BCBC 2018 , OBC 2012 , ABC 2019
- CSA 086-09, CSA 086-14
- TPIC 2011, TPIC 2014

(55 % OF 27.2 P.S.F. G.S.L. PLUS 8.4 P.S.F. RAIN LOAD) EQUALS 23.3 P.S.F. SPECIFIED ROOF LIVE LOAD

ALLOWABLE DEFL.(LL)= L/360 (0.44")
CALCULATED VERT. DEFL.(LL) = L/ 999 (0.01")
ALLOWABLE DEFL.(TL)= L/360 (0.44")
CALCULATED VERT. DEFL.(TL) = L/ 999 (0.05")

CSI: TC=0.30/1.00 (D-E:1) , BC=0.27/1.00 (G-H:4) , WB=0.39/1.00 (C-H:1) , SSI=0.15/1.00 (D-E:1)

DOL LUMBER=1.00 NAIL=1.00 LS BEND=1.10 COMP=1.10 SHEAR=1.10 TENS= 1.10

COMPANION LIVE LOAD FACTOR = 1.00

TRUSS PLATE MANUFACTURER IS NOT RESPONSIBLE FOR QUALITY CONTROL IN THE TRUSS MANUFACTURING PLANT .

NAIL VALUES

PLATE	GRIP(DRY) (PSI) MAX	MIN	SHEAR (PLI) MAX	MIN	SECTION (PLI) MAX	MIN
MT20	618	354	1667	788	1987	1656

PLATE PLACEMENT TOL. = 0.250 inches

PLATE ROTATION TOL. = 5.0 Deg.

JSI GRIP= 0.79 (H) (INPUT = 0.90)
JSI METAL= 0.39 (C) (INPUT = 1.00)

JOB NAME	TRUSS NAME	QUANTITY	PLY	JOB DESC.		DRWG NO.
313997	H11T	.	1	TRUSS DESC.	JT-39002	E-19112575

Alpa Roof Truss, Maple

Version 8.300 S Aug 9 2019 MiTek Industries, Inc. Mon Nov 11 13:31:49 2019 Page 1
ID:1djR6DYvLvIlXkyExRWgN1yQawr-c4If0Nvvftb7VjaPIOAv7DAv9G8TQKCHFXhzjMyKFhe

Scale = 1:58.7

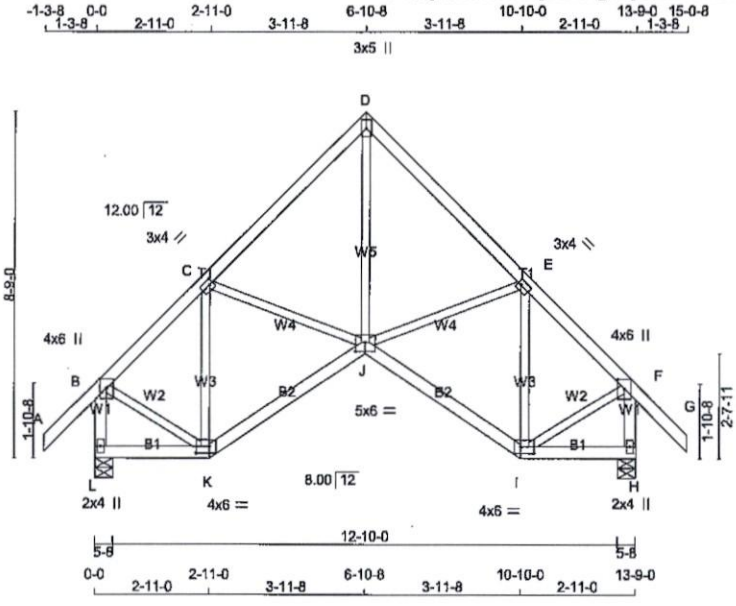

TOTAL WEIGHT = 4 X 71 = 282 lb

[M][F]

LUMBER

N. L. G. A. RULES

CHORDS	SIZE		LUMBER	DESCR.
A - D	2x4	DRY	No.2	SPF
D - G	2x4	DRY	No.2	SPF
L - B	2x4	DRY	No.2	SPF
H - F	2x4	DRY	No.2	SPF
L - K	2x4	DRY	No.2	SPF
K - J	2x4	DRY	No.2	SPF
J - I	2x4	DRY	No.2	SPF
I - H	2x4	DRY	No.2	SPF
ALL WEBS EXCEPT	2x3	DRY	No.2	SPF

DRY: SEASONED LUMBER.

PLATES (table is in Inches)

JT	TYPE	PLATES	W	LEN	Y	X
B	TMVW+p	MT20	4.0	6.0	2.75	2.00
C	TMWW-t	MT20	3.0	4.0	1.50	1.00
D	TTW+p	MT20	3.0	5.0		
E	TMWW-t	MT20	3.0	4.0	1.50	1.00
F	TMVW+p	MT20	4.0	6.0	2.75	2.00
H	BMV1+p	MT20	2.0	4.0		
I	BBWW-l	MT20	4.0	6.0	2.00	4.00
J	BBWWW-p	MT20	5.0	6.0	2.75	3.00
K	BBWW-l	MT20	4.0	6.0	2.00	4.00
L	BMV1+p	MT20	2.0	4.0		

NOTE: Lateral brace(s) shown shall be 2x4 SPF #2

LICENSED PROFESSIONAL ENGINEER
11/11/2019
R. TURENNE
100157040
PROVINCE OF ONTARIO

DIMENSIONS, SUPPORTS AND LOADINGS SPECIFIED BY FABRICATOR TO BE VERIFIED BY BUILDING DESIGNER

BEARINGS

JT	FACTORED GROSS REACTION VERT	HORZ	MAXIMUM FACTORED GROSS REACTION DOWN	HORZ	UPLIFT	INPUT BRG IN-SX	REQRD BRG IN-SX
L	829	0	829	0	0	5-8	1-8
H	829	0	829	0	0	5-8	1-8

UNFACTORED REACTIONS

JT	1ST LCASE COMBINED	MAX./MIN. COMPONENT REACTIONS SNOW	LIVE	PERM.LIVE	WIND	DEAD	SOIL
L	586	385 / 0	0 / 0	0 / 0	0 / 0	201 / 0	0 / 0
H	586	385 / 0	0 / 0	0 / 0	0 / 0	201 / 0	0 / 0

BEARING MATERIAL TO BE SPF NO.2 OR BETTER AT JOINT(S) L, H

BRACING

TOP CHORD TO BE SHEATHED OR MAX. PURLIN SPACING = 6.25 FT.
MAX. UNBRACED BOTTOM CHORD LENGTH = 10.00 FT OR RIGID CEILING DIRECTLY APPLIED.

ALL PITCH BREAKS AND PERIMETER CORNER JOINTS MUST BE LATERALLY RESTRAINED.

LOADING

TOTAL LOAD CASES: (4)

CHORDS

MEMB. FR-TO	MAX. FACTORED FORCE (LBS)	FACTORED VERT. LOAD LC1 (PLF) FROM	TO	MAX CSI (LC)	MAX. UNBRAC LENGTH
A- B	0 / 42	-84.9	-84.9	0.12 (1)	10.00
B- C	-536 / 0	-84.9	-84.9	0.14 (1)	6.25
C- D	-625 / 0	-84.9	-84.9	0.16 (1)	6.25
D- E	-625 / 0	-84.9	-84.9	0.16 (1)	6.25
E- F	-536 / 0	-84.9	-84.9	0.14 (1)	6.25
F- G	0 / 42	-84.9	-84.9	0.12 (1)	10.00
L- B	-802 / 0	0.0	0.0	0.09 (1)	7.81
H- F	-802 / 0	0.0	0.0	0.09 (1)	7.81
L- K	0 / 0	-18.5	-18.5	0.05 (4)	10.00
K- J	0 / 473	-18.5	-18.5	0.13 (4)	10.00
J- I	0 / 473	-18.5	-18.5	0.13 (4)	10.00
I- H	0 / 0	-18.5	-18.5	0.05 (4)	10.00

WEBS

MEMB. FR-TO	MAX. FACTORED FORCE (LBS)	MAX CSI (LC)
J- D	0 / 572	0.13 (1)
J- E	0 / 37	0.01 (1)
I- E	-408 / 0	0.13 (1)
C- J	0 / 37	0.01 (1)
K- C	-408 / 0	0.13 (1)
B- K	0 / 453	0.10 (1)
I- F	0 / 453	0.10 (1)

DESIGN CRITERIA

SPECIFIED LOADS:

TOP CH.	LL	=	23.3	PSF
	DL	=	6.0	PSF
BOT CH.	LL	=	0.0	PSF
	DL	=	7.4	PSF
TOTAL LOAD		=	36.7	PSF

SPACING = 24.0 IN. C/C

THIS TRUSS IS DESIGNED FOR RESIDENTIAL OR SMALL BUILDING REQUIREMENTS OF PART 9, NBCC 2010, NBCC 2015

THIS DESIGN COMPLIES WITH:
- PART 9 OF BCBC 2018 , OBC 2012 , ABC 2019
- CSA 086-09, CSA 086-14
- TPIC 2011, TPIC 2014

(55 % OF 27.2 P.S.F. G.S.L. PLUS 8.4 P.S.F. RAIN LOAD) EQUALS 23.3 P.S.F. SPECIFIED ROOF LIVE LOAD

ALLOWABLE DEFL.(LL)= L/360 (0.46")
CALCULATED VERT. DEFL.(LL) = L/ 999 (0.01")
ALLOWABLE DEFL.(TL)= L/360 (0.46")
CALCULATED VERT. DEFL.(TL) = L/ 999 (0.04")

CSI: TC=0.16/1.00 (C-D:1) , BC=0.13/1.00 (J-K:4) , WB=0.13/1.00 (E-I:1) , SSI=0.11/1.00 (C-D:1)

DOL LUMBER=1.00 NAIL=1.00 LS BEND=1.10 COMP=1.10 SHEAR=1.10 TENS= 1.10

COMPANION LIVE LOAD FACTOR = 1.00

TRUSS PLATE MANUFACTURER IS NOT RESPONSIBLE FOR QUALITY CONTROL IN THE TRUSS MANUFACTURING PLANT .

NAIL VALUES

PLATE	GRIP(DRY) (PSI) MAX	MIN	SHEAR (PLI) MAX	MIN	SECTION (PLI) MAX	MIN
MT20	618	354	1667	788	1987	1656

PLATE PLACEMENT TOL. = 0.250 Inches

PLATE ROTATION TOL. = 5.0 Deg.

JSI GRIP= 0.75 (I) (INPUT = 0.90)
JSI METAL= 0.26 (B) (INPUT = 1.00)

JOB NAME	TRUSS NAME	QUANTITY	PLY	JOB DESC.	DRWG NO.
313997	H11TG		1	TRUSS DESC. JT-39002	E-19112576

Alpa Roof Truss, Maple

Version 8.300 S Aug 9 2019 MiTek Industries, Inc. Mon Nov 11 13:31:53 2019 Page 1
ID:1djR6DYvLvlIXkyExRWgN1yQawr-Ur?AskyPj55Z_LuA_EFrH3LbkuV?M8ssA8fAs7yKFha

Scale = 1:59.2

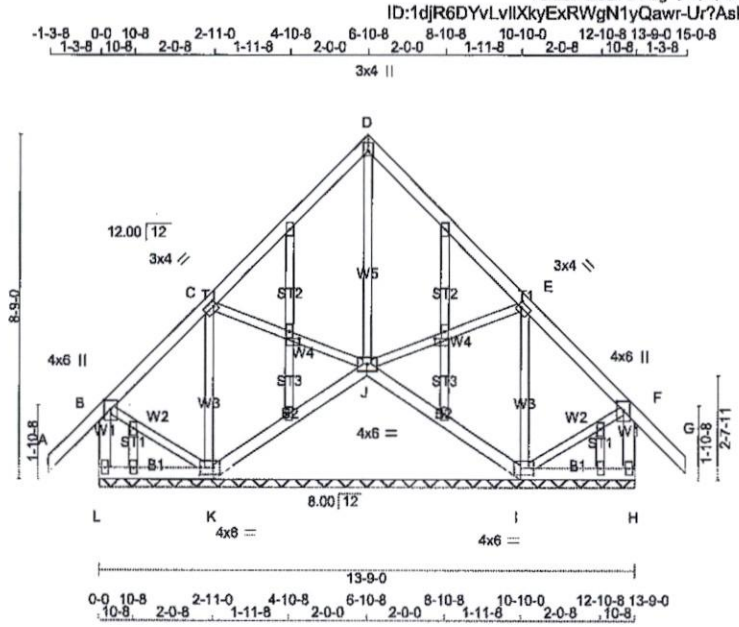

TOTAL WEIGHT = 2 X 80 = 160 lb

[M]

LUMBER

N. L. G. A. RULES

CHORDS	SIZE		LUMBER	DESCR.
A - D	2x4	DRY	No.2	SPF
D - G	2x4	DRY	No.2	SPF
L - B	2x4	DRY	No.2	SPF
H - F	2x4	DRY	No.2	SPF
L - K	2x4	DRY	No.2	SPF
K - J	2x4	DRY	No.2	SPF
J - I	2x4	DRY	No.2	SPF
I - H	2x4	DRY	No.2	SPF

ALL WEBS 2x3 DRY No.2 SPF
EXCEPT

ALL GABLE WEBS
2x3 DRY No.2 SPF

DRY: SEASONED LUMBER.

GABLE STUDS SPACED AT 2-0-0 OC.

PLATES (table is in inches)

JT	TYPE	PLATES	W	LEN	Y	X
B	TMVW+p	MT20	4.0	6.0	2.75	2.00
C	TMWW-t	MT20	3.0	4.0	1.50	1.00
D	TTW+p	MT20	3.0	4.0	Edge	
E	TMWW-t	MT20	3.0	4.0	1.50	1.00
F	TMVW+p	MT20	4.0	6.0	2.75	2.00
H	BMV1+p	MT20	2.0	4.0		
I	BBWW1-l	MT20	4.0	6.0	2.00	4.00
J	BBWWW1-p	MT20	4.0	6.0		
K	BBWW1-l	MT20	4.0	6.0	2.00	4.00
L	BMV1+p	MT20	2.0	4.0		
M	NP-p	MT20	2.0	4.0	1.00	1.75
M, N, O, P, Q, R, S, T, U, V						
M	NP+w	MT20	2.0	4.0		
T	NP-p	MT20	2.0	4.0	1.00	1.75

Edge - INDICATES REFERENCE CORNER OF PLATE TOUCHES EDGE OF CHORD.

NOTE: Lateral brace(s) shown shall be 2x4 SPF #2

LICENSED PROFESSIONAL ENGINEER
11/11/2019
R. TURENNE
100157040
PROVINCE OF ONTARIO

DIMENSIONS, SUPPORTS AND LOADINGS SPECIFIED BY FABRICATOR TO BE VERIFIED BY BUILDING DESIGNER

BEARINGS

JT	FACTORED GROSS REACTION VERT	HORZ	MAXIMUM FACTORED GROSS REACTION DOWN	HORZ	UPLIFT	INPUT BRG IN-SX	REQRD BRG IN-SX
L	325	0	325	0	0	13-9-0 (6-10-8)	2-1
K	263	0	263	0	0	13-9-0 (6-10-8)	2-1
J	482	0	482	0	0	13-9-0 (6-10-8)	2-1
I	263	0	263	0	0	13-9-0 (6-10-8)	2-1
H	325	0	325	0	0	13-9-0 (6-10-8)	2-1

VALUE IN PARENTHESIS INDICATES EFFECTIVE BEARING LENGTH

BEVELED PLATE OR SHIM REQUIRED TO PROVIDE FULL BEARING SURFACE WITH TRUSS CHORD AT JT(S): J

UNFACTORED REACTIONS

JT	1ST LCASE COMBINED	MAX./MIN. COMPONENT REACTIONS SNOW	LIVE	PERM.LIVE	WIND	DEAD	SOIL
L	227	164 / 0	0 / 0	0 / 0	0 / 0	64 / 0	0 / 0
K	188	109 / 0	0 / 0	0 / 0	0 / 0	79 / 0	0 / 0
J	341	225 / 0	0 / 0	0 / 0	0 / 0	116 / 0	0 / 0
I	188	109 / 0	0 / 0	0 / 0	0 / 0	79 / 0	0 / 0
H	227	164 / 0	0 / 0	0 / 0	0 / 0	64 / 0	0 / 0

BEARING MATERIAL TO BE SPF NO.2 OR BETTER AT JOINT(S) L, K, J, I, H

BRACING

TOP CHORD TO BE SHEATHED OR MAX. PURLIN SPACING = 6.25 FT.
MAX. UNBRACED BOTTOM CHORD LENGTH = 10.00 FT OR RIGID CEILING DIRECTLY APPLIED.

ALL PITCH BREAKS AND PERIMETER CORNER JOINTS MUST BE LATERALLY RESTRAINED.

LOADING

TOTAL LOAD CASES: (4)

CHORDS

MEMB. FR-TO	MAX. FACTORED FORCE (LBS)	FACTORED VERT. LOAD LC1 (PLF) FROM	TO	MAX CSI (LC)	MAX. UNBRAC LENGTH
A- B	0 / 42	-84.9	-84.9	0.12 (1)	10.00
B- C	-67 / 0	-84.9	-84.9	0.19 (1)	6.25
C- D	-29 / 0	-84.9	-84.9	0.19 (1)	6.25
D- E	-29 / 0	-84.9	-84.9	0.19 (1)	6.25
E- F	-67 / 0	-84.9	-84.9	0.19 (1)	6.25
F- G	0 / 42	-84.9	-84.9	0.12 (1)	10.00
L- B	-298 / 0	0.0	0.0	0.03 (1)	7.81
H- F	-298 / 0	0.0	0.0	0.03 (1)	7.81
L- K	0 / 0	-18.5	-18.5	0.05 (4)	10.00
K- J	0 / 79	-18.5	-18.5	0.09 (4)	10.00
J- I	0 / 79	-18.5	-18.5	0.09 (4)	10.00
I- H	0 / 0	-18.5	-18.5	0.05 (4)	10.00

WEBS

MEMB. FR-TO	MAX. FACTORED FORCE (LBS)	MAX CSI (LC)
J- D	-271 / 0	0.15 (1)
J- E	-67 / 0	0.02 (1)
I- E	-280 / 0	0.09 (1)
C- J	-67 / 0	0.02 (1)
K- C	-280 / 0	0.09 (1)
B- K	0 / 81	0.02 (1)
I- F	0 / 81	0.02 (1)

DESIGN CRITERIA

SPECIFIED LOADS:

TOP CH.	LL	=	23.3	PSF
	DL	=	6.0	PSF
BOT CH.	LL	=	0.0	PSF
	DL	=	7.4	PSF
TOTAL LOAD		=	36.7	PSF

SPACING = 24.0 IN. C/C

THIS TRUSS IS DESIGNED FOR RESIDENTIAL OR SMALL BUILDING REQUIREMENTS OF PART 9, NBCC 2010, NBCC 2015

THIS DESIGN COMPLIES WITH:
- PART 9 OF BCBC 2018 , OBC 2012 , ABC 2019
- CSA 086-09, CSA 086-14
- TPIC 2011, TPIC 2014

(55 % OF 27.2 P.S.F. G.S.L. PLUS 8.4 P.S.F. RAIN LOAD) EQUALS 23.3 P.S.F. SPECIFIED ROOF LIVE LOAD

CSI: TC=0.19/1.00 (B-C:1) , BC=0.09/1.00 (J-K:4) , WB=0.15/1.00 (D-J:1) , SSI=0.11/1.00 (C-D:1)

DOL LUMBER=1.00 NAIL=1.00 LS BEND=1.10 COMP=1.10 SHEAR=1.10 TENS= 1.10

COMPANION LIVE LOAD FACTOR = 1.00

TRUSS PLATE MANUFACTURER IS NOT RESPONSIBLE FOR QUALITY CONTROL IN THE TRUSS MANUFACTURING PLANT .

NAIL VALUES

PLATE	GRIP(DRY) (PSI) MAX	MIN	SHEAR (PLI) MAX	MIN	SECTION (PLI) MAX	MIN
MT20	618	354	1667	788	1987	1656

PLATE PLACEMENT TOL. = 0.250 Inches

PLATE ROTATION TOL. = 5.0 Deg.

JSI GRIP= 0.43 (D) (INPUT = 0.90)
JSI METAL= 0.17 (J) (INPUT = 1.00)

JOB NAME	TRUSS NAME	QUANTITY	PLY	JOB DESC.	DRWG NO.
313997	H15G	1	1	TRUSS DESC. JT-39002	E-19112577

Alpa Roof Truss, Maple

Version 8.300 S Aug 9 2019 MiTek Industries, Inc. Mon Nov 11 13:31:13 2019 Page 1

ID:1djR6DYvLvIlXkyExRWgN1yQawr-f9a2T3TK8p2EBBqUeqXTfdhn_mtX_1u_zwz3SSyKFIC

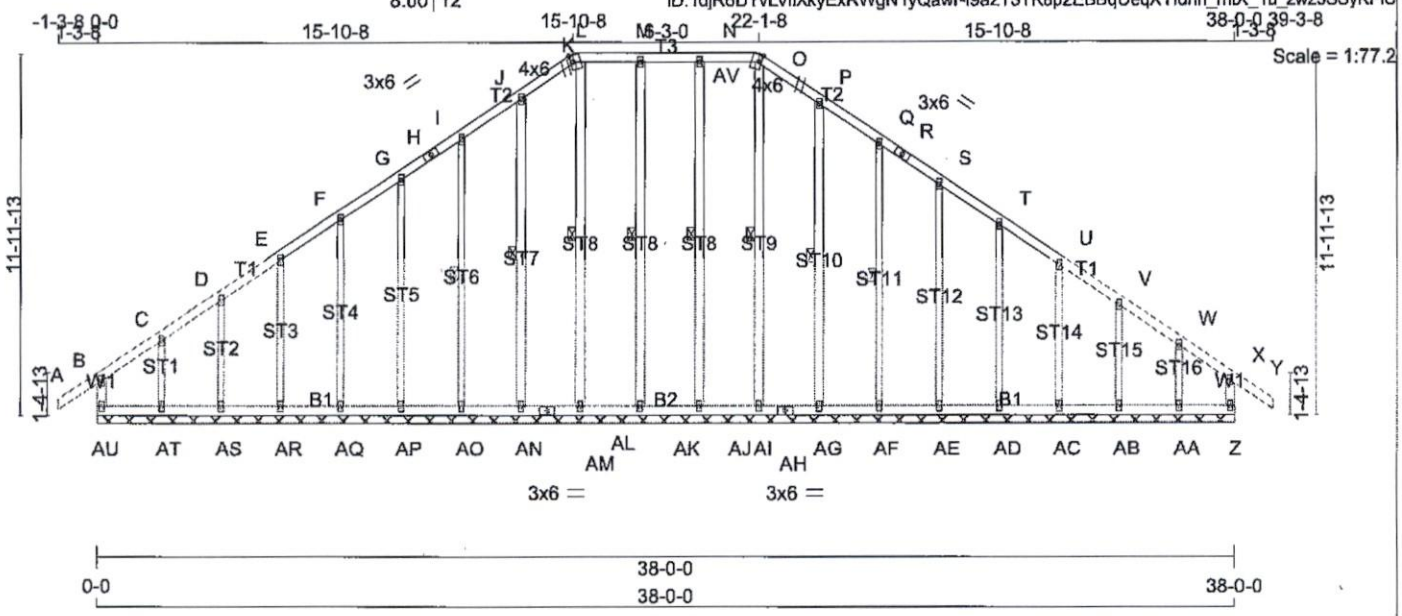

TOTAL WEIGHT = 2 X 229 = 458 lb [M]

LUMBER

N. L. G. A. RULES

CHORDS	SIZE		LUMBER	DESCR.
AU- B	2x4	DRY	No.2	SPF
A - H	2x4	DRY	No.2	SPF
H - K	2x4	DRY	No.2	SPF
K - O	2x4	DRY	No.2	SPF
O - R	2x4	DRY	No.2	SPF
R - Y	2x4	DRY	No.2	SPF
Z - X	2x4	DRY	No.2	SPF
AU- AM	2x4	DRY	No.2	SPF
AM- AH	2x4	DRY	No.2	SPF
AH- Z	2x4	DRY	No.2	SPF
ALL WEBS	2x3	DRY	No.2	SPF
EXCEPT				
AI - O	2x4	DRY	No.2	SPF
AJ - N	2x4	DRY	No.2	SPF
AK- M	2x4	DRY	No.2	SPF
AL- L	2x4	DRY	No.2	SPF
AN- J	2x4	DRY	No.2	SPF
AG- P	2x4	DRY	No.2	SPF
ALL GABLE WEBS				
	2x3	DRY	No.2	SPF
EXCEPT				
ST1	2x4	DRY	No.2	SPF
ST2	2x4	DRY	No.2	SPF
ST3	2x4	DRY	No.2	SPF
ST4	2x4	DRY	No.2	SPF
ST5	2x4	DRY	No.2	SPF
ST12	2x4	DRY	No.2	SPF

DRY: SEASONED LUMBER.

GABLE STUDS SPACED AT 2-0-0 OC.

PLATES (table is in inches)

JT	TYPE	PLATES	W	LEN	Y	X
B	TMV+p	MT20	2.0	4.0		
C, D, E, F, G, I, J, M, N, P, Q, S, T, U, V, W						
C	TMW+w	MT20	2.0	4.0		
H	TS-t	MT20	3.0	6.0		
K						
K	TTW+m	MT20	4.0	6.0	Edge 1.00	

NOTE: Lateral brace(s) shown shall be 2x4 SPF #2

LICENSED PROFESSIONAL ENGINEER
11/11/2019
R. TURENNE
100157040
PROVINCE OF ONTARIO

DIMENSIONS, SUPPORTS AND LOADINGS SPECIFIED BY FABRICATOR TO BE VERIFIED BY BUILDING DESIGNER

BEARINGS

THIS TRUSS DESIGNED FOR CONTINUOUS BEARINGS.

THIS TRUSS REQUIRES RIGID SHEATHING ON EXPOSED FACE.

BEARING MATERIAL TO BE SPF NO.2 OR BETTER AT JOINT(S)

BRACING

FOR SECTION K-O, MAX. PURLIN SPACING = 2.00 FT.
FOR OTHER SECTIONS, TOP CHORD TO BE SHEATHED OR MAX. PURLIN SPACING = 6.25 FT.
MAX. UNBRACED BOTTOM CHORD LENGTH = 10.00 FT OR RIGID CEILING DIRECTLY APPLIED.

ALL PITCH BREAKS AND PERIMETER CORNER JOINTS MUST BE LATERALLY RESTRAINED.

1 LATERAL BRACE(S) AT 1/ 2 LENGTH OF O-AI, N-AJ, M-AK, L-AL, J-AN, I-AO, P-AG, Q-AF.

END VERTICAL(S) MUST BE SHEATHED OR HAVE BRACES AS INDICATED IN THE MAX. UNBRACED LENGTH COLUMN OF THE TABLE BELOW

LOADING

TOTAL LOAD CASES: (4)

CHORDS

MEMB. FR-TO	MAX. FACTORED FORCE (LBS)	FACTORED VERT. LOAD LC1 (PLF) FROM	TO	MAX CSI (LC)	MAX. UNBRAC LENGTH
AU- B	-210 / 0	0.0	0.0	0.01 (4)	7.81
A- B	0 / 32	-84.9	-84.9	0.11 (1)	10.00
B- C	-11 / 0	-84.9	-84.9	0.04 (1)	6.25
C- D	-4 / 0	-84.9	-84.9	0.04 (1)	10.00
D- E	-3 / 0	-84.9	-84.9	0.04 (1)	10.00
E- F	-2 / 4	-84.9	-84.9	0.04 (1)	10.00
F- G	-2 / 6	-84.9	-84.9	0.04 (1)	10.00
G- H	-1 / 8	-84.9	-84.9	0.04 (1)	10.00
H- I	-1 / 8	-84.9	-84.9	0.04 (1)	10.00
I- J	0 / 12	-84.9	-84.9	0.05 (1)	10.00
J- K	-2 / 5	-84.9	-84.9	0.04 (1)	10.00
K- L	0 / 15	-92.4	-92.4	0.04 (1)	2.00
L- M	0 / 10	-92.4	-92.4	0.04 (1)	2.00
M-AV	0 / 10	-92.4	-92.4	0.04 (1)	2.00
AV- N	0 / 10	-92.4	-92.4	0.04 (1)	2.00
N- O	0 / 10	-92.4	-92.4	0.04 (1)	2.00
O- P	0 / 11	-84.9	-84.9	0.04 (1)	10.00
P- Q	0 / 12	-84.9	-84.9	0.04 (1)	10.00
Q- R	-1 / 8	-84.9	-84.9	0.04 (1)	10.00
R- S	-1 / 8	-84.9	-84.9	0.04 (1)	10.00
S- T	-2 / 6	-84.9	-84.9	0.04 (1)	10.00
T- U	-2 / 4	-84.9	-84.9	0.04 (1)	10.00
U- V	-3 / 0	-84.9	-84.9	0.04 (1)	10.00
V- W	-3 / 0	-84.9	-84.9	0.04 (1)	10.00
W- X	-26 / 0	-84.9	-84.9	0.09 (1)	6.25
X- Y	0 / 32	-84.9	-84.9	0.11 (1)	10.00
Z- X	-227 / 0	0.0	0.0	0.03 (1)	7.81
AU-AT	0 / 9	-18.5	-18.5	0.02 (4)	10.00
AT-AS	0 / 3	-18.5	-18.5	0.02 (4)	10.00
AS-AR	0 / 2	-18.5	-18.5	0.02 (4)	10.00
AR-AQ	-3 / 2	-18.5	-18.5	0.02 (4)	10.00
AQ-AP	-5 / 1	-18.5	-18.5	0.01 (4)	10.00
AP-AO	-7 / 1	-18.5	-18.5	0.01 (4)	10.00
AO-AN	-8 / 0	-18.5	-18.5	0.01 (4)	10.00
AN-AM	-10 / 0	-18.5	-18.5	0.01 (4)	10.00
AM-AL	-10 / 0	-18.5	-18.5	0.01 (4)	10.00
AL-AK	-10 / 0	-18.5	-18.5	0.01 (4)	10.00
AK-AJ	-10 / 0	-18.5	-18.5	0.01 (4)	10.00
AJ-AI	-10 / 0	-18.5	-18.5	0.01 (4)	10.00
AI-AH	-10 / 0	-18.5	-18.5	0.01 (4)	10.00

WEBS

MEMB. FR-TO	MAX. FACTORED FORCE (LBS)	MAX CSI (LC)
AI- O	-186 / 0	0.15 (1)
AJ- N	-186 / 0	0.15 (1)
AK- M	-185 / 0	0.14 (1)
AL- L	-188 / 0	0.15 (1)
AN- J	-176 / 0	0.11 (1)
AO- I	-165 / 0	0.10 (1)
AP- G	-170 / 0	0.22 (1)
AQ- F	-168 / 0	0.13 (1)
AR- E	-168 / 0	0.08 (1)
AS- D	-167 / 0	0.04 (1)
AT- C	-167 / 0	0.03 (1)
AG- P	-176 / 0	0.10 (1)
AF- Q	-165 / 0	0.09 (1)
AE- S	-170 / 0	0.21 (1)
AD- T	-168 / 0	0.12 (1)
AC- U	-166 / 0	0.07 (1)
AB- V	-177 / 0	0.04 (1)
AA- W	-121 / 0	0.02 (1)

DESIGN CRITERIA

SPECIFIED LOADS:

TOP CH.	LL	=	23.3	PSF
	DL	=	6.0	PSF
BOT CH.	LL	=	0.0	PSF
	DL	=	7.4	PSF
TOTAL LOAD		=	36.7	PSF

SPACING = 24.0 IN. C/C

LOADING IN FLAT SECTION BASED ON PIGGYBACK TRUSS WITH SLOPES OF 6.00/12 AND -6.00/12 AND RESPECTIVE WALL HEIGHTS OF 0-0 AND 0-0 AND AN ADDITIONAL DEAD LOAD OF 3.0 P.S.F.

THIS TRUSS IS DESIGNED FOR RESIDENTIAL OR SMALL BUILDING REQUIREMENTS OF PART 9, NBCC 2010, NBCC 2015

THIS DESIGN COMPLIES WITH:
- PART 9 OF BCBC 2018 , OBC 2012 , ABC 2019
- CSA 086-09, CSA 086-14
- TPIC 2011, TPIC 2014

DESIGN ASSUMPTIONS
-OVERHANG NOT TO BE ALTERED OR CUT OFF.

(55 % OF 27.2 P.S.F. G.S.L. PLUS 8.4 P.S.F. RAIN LOAD) EQUALS 23.3 P.S.F. SPECIFIED ROOF LIVE LOAD

CSI: TC=0.11/1.00 (X-Y:1) , BC=0.03/1.00 (Z-AA:1) , WB=0.22/1.00 (G-AP:1) , SSI=0.08/1.00 (X-Y:1)

DOL LUMBER=1.00 NAIL=1.00 LS BEND=1.10 COMP=1.10 SHEAR=1.10 TENS= 1.10

COMPANION LIVE LOAD FACTOR = 1.00

TRUSS PLATE MANUFACTURER IS NOT RESPONSIBLE FOR QUALITY CONTROL IN THE TRUSS MANUFACTURING PLANT .

NAIL VALUES

PLATE	GRIP(DRY) (PSI) MAX	MIN	SHEAR (PLI) MAX	MIN	SECTION (PLI) MAX	MIN
MT20	618	354	1667	788	1987	1656

PLATE PLACEMENT TOL. = 0.250 Inches

PLATE ROTATION TOL. = 5.0 Deg.

JSI GRIP= 0.56 (K) (INPUT = 0.90)
JSI METAL= 0.12 (X) (INPUT = 1.00)

CONTINUED ON PAGE 2

JOB NAME	TRUSS NAME	QUANTITY	PLY	JOB DESC.		DRWG NO.
313997	H16P		1	TRUSS DESC.	JT-39002	E-19112578

Alpa Roof Truss, Maple

Version 8.300 S Aug 9 2019 MiTek Industries, Inc. Mon Nov 11 13:29:58 2019 Page 1
ID:1djR6DYvLvlIXkyExRWgN1yQawr-MjYhjQZHomcthgb4laht7p4zuXHvv9WxjIIbJlyKFjN

Scale = 1:16.5

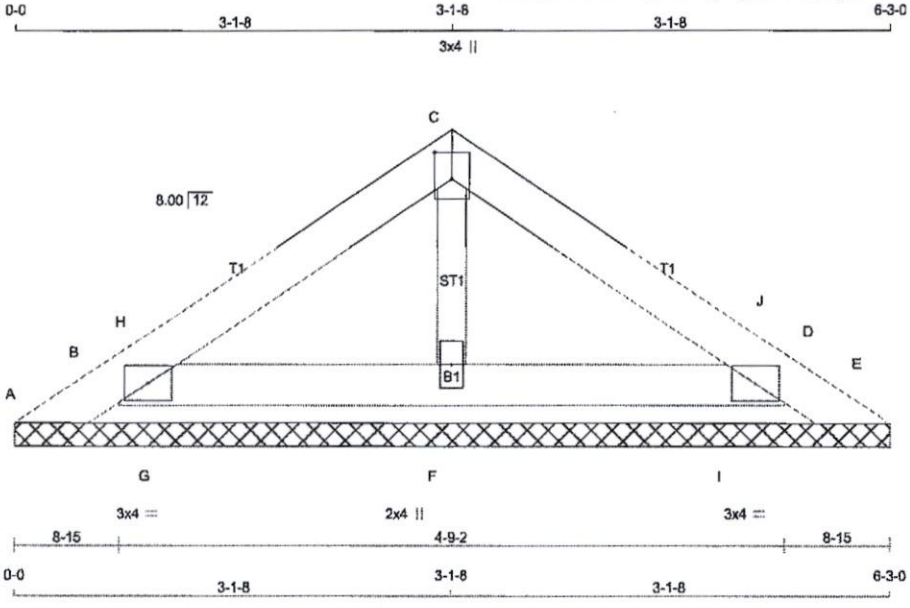

TOTAL WEIGHT = 2 X 15 = 30 lb [M]

LUMBER
N. L. G. A. RULES

CHORDS	SIZE		LUMBER	DESCR.
A - C	2x4	DRY	No.2	SPF
C - E	2x4	DRY	No.2	SPF
B - D	2x4	DRY	No.2	SPF
ALL WEBS	2x3	DRY	No.2	SPF
ALL GABLE WEBS	2x3	DRY	No.2	SPF

DRY: SEASONED LUMBER.

GABLE STUDS SPACED AT 2-0-0 OC.

PLATES (table is in inches)

JT	TYPE	PLATES	W	LEN	Y	X
B	TMB1-I	MT20	3.0	4.0		
C	TTW+p	MT20	3.0	4.0	2.25	1.50
D	TMB1-I	MT20	3.0	4.0		
F	BMW1+w	MT20	2.0	4.0		

NOTE: Lateral brace(s) shown shall be 2x4 SPF #2

DIMENSIONS, SUPPORTS AND LOADINGS SPECIFIED BY FABRICATOR TO BE VERIFIED BY BUILDING DESIGNER

BEARINGS

THIS TRUSS DESIGNED FOR CONTINUOUS BEARINGS.

THIS TRUSS REQUIRES RIGID SHEATHING ON EXPOSED FACE.

BEVELED PLATE OR SHIM REQUIRED TO PROVIDE FULL BEARING SURFACE WITH TRUSS CHORD AT JT(S): F

PROVIDE ANCHORAGE AT BEARING JOINT A FOR 150 LBS FACTORED UPLIFT
PROVIDE ANCHORAGE AT BEARING JOINT E FOR 150 LBS FACTORED UPLIFT
BEARING MATERIAL TO BE SPF NO.2 OR BETTER AT JOINT(S)

BRACING

TOP CHORD TO BE SHEATHED OR MAX. PURLIN SPACING = 6.25 FT.
MAX. UNBRACED BOTTOM CHORD LENGTH = 10.00 FT OR RIGID CEILING DIRECTLY APPLIED.

ALL PITCH BREAKS AND PERIMETER CORNER JOINTS MUST BE LATERALLY RESTRAINED.

LOADING

TOTAL LOAD CASES: (4)

CHORDS

MEMB. FR-TO	MAX. FACTORED FORCE (LBS)	FACTORED VERT. LOAD LC1 (PLF) FROM	TO	MAX CSI (LC)	MAX. UNBRAC LENGTH
A- B	0 / 27	-103.4	-103.4	0.05 (1)	10.00
B- H	-71 / 0	-84.9	-84.9	0.05 (1)	6.25
H- C	-48 / 0	-84.9	-84.9	0.05 (1)	6.25
C- J	-48 / 0	-84.9	-84.9	0.05 (1)	6.25
J- D	-71 / 0	-84.9	-84.9	0.05 (1)	6.25
D- E	0 / 27	-103.4	-103.4	0.05 (1)	10.00
B- G	0 / 35	-18.5	-18.5	0.03 (1)	10.00
G- F	0 / 35	-18.5	-18.5	0.04 (1)	10.00
F- I	0 / 35	-18.5	-18.5	0.04 (1)	10.00
I- D	0 / 35	-18.5	-18.5	0.03 (1)	10.00

WEBS

MEMB. FR-TO	MAX. FACTORED FORCE (LBS)	MAX CSI (LC)
F- C	-108 / 0	0.02 (1)
G- H	-66 / 10	0.00 (1)
I- J	-66 / 10	0.00 (1)

DESIGN CRITERIA

SPECIFIED LOADS:

TOP CH.	LL =	23.3	PSF
	DL =	6.0	PSF
BOT CH.	LL =	0.0	PSF
	DL =	7.4	PSF
TOTAL LOAD	=	36.7	PSF

SPACING = 24.0 IN. C/C

THIS TRUSS IS DESIGNED FOR RESIDENTIAL OR SMALL BUILDING REQUIREMENTS OF PART 9, NBCC 2010, NBCC 2015

THIS DESIGN COMPLIES WITH:
- PART 9 OF BCBC 2018 , OBC 2012 , ABC 2019
- CSA 086-09, CSA 086-14
- TPIC 2011, TPIC 2014

(55 % OF 27.2 P.S.F. G.S.L. PLUS 8.4 P.S.F. RAIN LOAD) EQUALS 23.3 P.S.F. SPECIFIED ROOF LIVE LOAD

CSI: TC=0.05/1.00 (D-E:1) , BC=0.04/1.00 (F-G:1) , WB=0.02/1.00 (C-F:1) , SSI=0.06/1.00 (C-J:1)

DOL LUMBER=1.00 NAIL=1.00 LS BEND=1.10 COMP=1.10 SHEAR=1.10 TENS= 1.10

COMPANION LIVE LOAD FACTOR = 1.00

TRUSS PLATE MANUFACTURER IS NOT RESPONSIBLE FOR QUALITY CONTROL IN THE TRUSS MANUFACTURING PLANT .

NAIL VALUES

PLATE	GRIP(DRY) (PSI) MAX	MIN	SHEAR (PLI) MAX	MIN	SECTION (PLI) MAX	MIN
MT20	618	354	1667	788	1987	1656

PLATE PLACEMENT TOL. = 0.250 inches

PLATE ROTATION TOL. = 5.0 Deg.

JSI GRIP= 0.19 (B) (INPUT = 0.90)
JSI METAL= 0.04 (B) (INPUT = 1.00)

JOB NAME	TRUSS NAME	QUANTITY	PLY	JOB DESC.		DRWG NO.
313997	P01	1	1	TRUSS DESC.	JT-39002	E-19112579

Alpa Roof Truss, Maple

Version 8.300 S Aug 9 2019 MiTek Industries, Inc. Mon Nov 11 14:01:17 2019 Page 1
ID:1djR6DYvLvIlXkyExRWgN1yQawr-qCa15vJvI5LGcQkCKiuWn2P?szWTfzwWobyXnuyKFG0

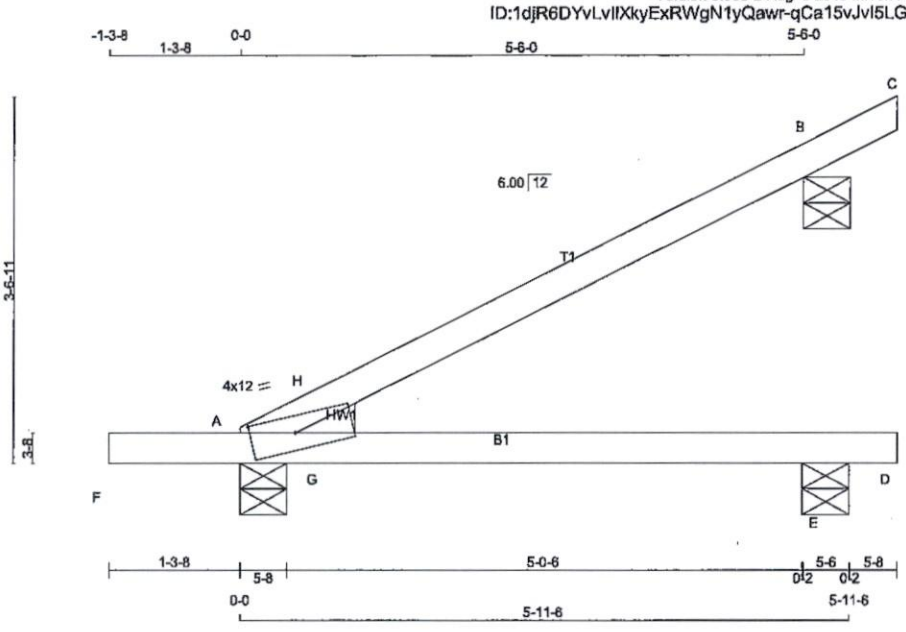

TOTAL WEIGHT = 6 X 18 = 106 lb
[M][F]

LUMBER
N. L. G. A. RULES

CHORDS	SIZE		LUMBER	DESCR.
A - C	2x4	DRY	No.2	SPF
F - D	2x4	DRY	No.2	SPF

DRY: SEASONED LUMBER.

PLATES (table is in inches)

JT	TYPE	PLATES	W	LEN	Y	X
A	TBMH1-m	MT20	4.0	12.0	2.00	5.25

NOTE: Lateral brace(s) shown shall be 2x4 SPF #2

LICENSED PROFESSIONAL ENGINEER
11/11/2019
R. TURENNE
100157040
PROVINCE OF ONTARIO

DIMENSIONS, SUPPORTS AND LOADINGS SPECIFIED BY FABRICATOR TO BE VERIFIED BY BUILDING DESIGNER

BEARINGS

JT	FACTORED GROSS REACTION VERT	HORZ	MAXIMUM FACTORED GROSS REACTION DOWN	HORZ	UPLIFT	INPUT BRG IN-SX	REQRD BRG IN-SX	HEEL WEDGE
A	424	0	424	0	0	5-8	1-8	2x4 L
E	102	0	102	0	0	5-8	1-8	
B	276	0	276	0	0	5-8	5-8	

BEVELED PLATE OR SHIM REQUIRED TO PROVIDE FULL BEARING SURFACE WITH TRUSS CHORD AT JT(S): B

UNFACTORED REACTIONS

JT	1ST LCASE COMBINED	MAX./MIN. COMPONENT REACTIONS SNOW	LIVE	PERM.LIVE	WIND	DEAD	SOIL
A	301	191 / 0	0 / 0	0 / 0	0 / 0	110 / 0	0 / 0
E	77	24 / 0	0 / 0	0 / 0	0 / 0	53 / 0	0 / 0
B	192	147 / 0	0 / 0	0 / 0	0 / 0	45 / 0	0 / 0

BEARING MATERIAL TO BE SPF NO.2 OR BETTER AT JOINT(S) A, E, B

BRACING
TOP CHORD TO BE SHEATHED OR MAX. PURLIN SPACING = 6.25 FT.
MAX. UNBRACED BOTTOM CHORD LENGTH = 10.00 FT OR RIGID CEILING DIRECTLY APPLIED.

ALL PITCH BREAKS AND PERIMETER CORNER JOINTS MUST BE LATERALLY RESTRAINED.

LOADING
TOTAL LOAD CASES: (4)

CHORDS

MEMB. FR-TO	MAX. FACTORED FORCE (LBS)	FACTORED VERT. LOAD LC1 (PLF) FROM	TO	MAX CSI (LC)	MAX. UNBRAC LENGTH
A- H	-20 / 0	-84.9	-84.9	0.07 (4)	6.25
H- B	0 / 4	-84.9	-84.9	0.36 (1)	10.00
B- C	-14 / 0	-84.9	-84.9	0.03 (1)	6.25
F- A	0 / 0	-103.4	-103.4	0.10 (1)	10.00
A- G	0 / 0	-18.5	-18.5	0.29 (1)	10.00
G- E	0 / 0	-18.5	-18.5	0.29 (1)	10.00
E- D	0 / 0	-18.5	-18.5	0.01 (4)	10.00

WEBS

MEMB. FR-TO	MAX. FACTORED FORCE (LBS)	MAX CSI (LC)
G- H	-224 / 5	0.00 (1)

DESIGN CRITERIA

SPECIFIED LOADS:

TOP CH.	LL =	23.3	PSF
	DL =	6.0	PSF
BOT CH.	LL =	0.0	PSF
	DL =	7.4	PSF
TOTAL LOAD	=	36.7	PSF

SPACING = 24.0 IN. C/C

THIS TRUSS IS DESIGNED FOR RESIDENTIAL OR SMALL BUILDING REQUIREMENTS OF PART 9, NBCC 2010, NBCC 2015

THIS DESIGN COMPLIES WITH:
- PART 9 OF BCBC 2018 , OBC 2012 , ABC 2019
- CSA 086-09, CSA 086-14
- TPIC 2011, TPIC 2014

(55 % OF 27.2 P.S.F. G.S.L. PLUS 8.4 P.S.F. RAIN LOAD) EQUALS 23.3 P.S.F. SPECIFIED ROOF LIVE LOAD

ALLOWABLE DEFL.(LL)= L/360 (0.19")
CALCULATED VERT. DEFL.(LL) = L/ 999 (0.07")
ALLOWABLE DEFL.(TL)= L/360 (0.19")
CALCULATED VERT. DEFL.(TL) = L/ 493 (0.14")

CANTILEVER DEFLECTION:
ALLOWABLE DEFL.(LL)= L/120 (0.19")
CALCULATED VERT. DEFL.(LL) = L/ 999 (0.00")
ALLOWABLE DEFL.(TL)= L/120 (0.19")
CALCULATED VERT. DEFL.(TL) = L/ 999 (0.01")

CSI: TC=0.36/1.00 (B-H:1) , BC=0.29/1.00 (E-G:1) , WB=0.00/1.00 (G-H:1) , SSI=0.19/1.00 (A-G:1)

DOL LUMBER=1.00 NAIL=1.00 LS BEND=1.10 COMP=1.10 SHEAR=1.10 TENS= 1.10

COMPANION LIVE LOAD FACTOR = 1.00

TRUSS PLATE MANUFACTURER IS NOT RESPONSIBLE FOR QUALITY CONTROL IN THE TRUSS MANUFACTURING PLANT .

NAIL VALUES

PLATE	GRIP(DRY) (PSI) MAX	MIN	SHEAR (PLI) MAX	MIN	SECTION (PLI) MAX	MIN
MT20	618	354	1667	788	1987	1656

PLATE PLACEMENT TOL. = 0.250 inches

PLATE ROTATION TOL. = 5.0 Deg.

JSI GRIP= 0.04 (A) (INPUT = 0.90)
JSI METAL= 0.01 (A) (INPUT = 1.00)

JOB NAME	TRUSS NAME	QUANTITY	PLY	JOB DESC.		DRWG NO.
313997	G01	1	1	TRUSS DESC.	JT-39002	E-19112580

Alpa Roof Truss, Maple

Version 8.300 S Aug 9 2019 MiTek Industries, Inc. Mon Nov 11 13:32:59 2019 Page 1

ID:1djR6DYvLvIIXkyExRWgN1yQawr-YY_6jJlpANPBuUwss5RKy_4u2U1Yp0ZaLQegAlyKFgY

Scale = 1:16.8

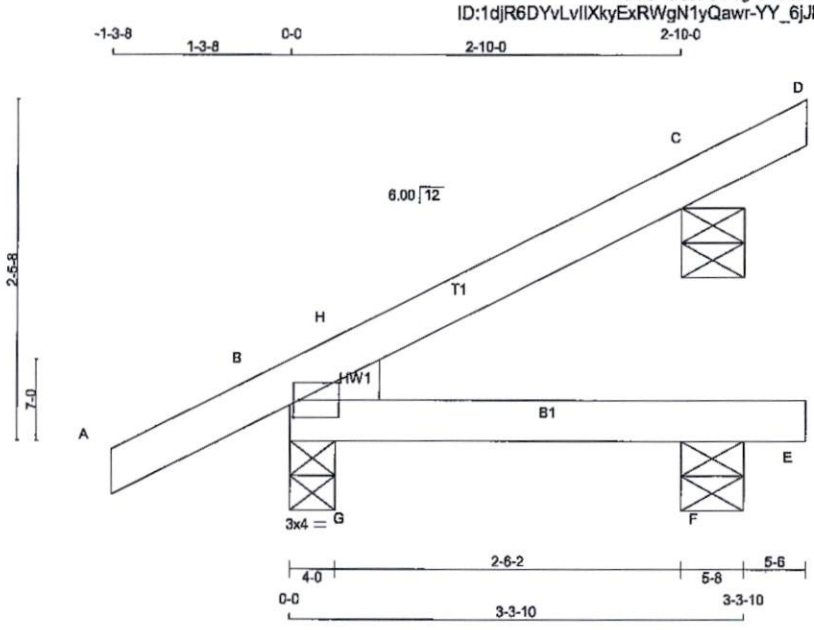

TOTAL WEIGHT = 6 X 12 = 69 lb [M]

LUMBER

N. L. G. A. RULES

CHORDS	SIZE		LUMBER	DESCR.
A - D	2x4	DRY	No.2	SPF
B - E	2x4	DRY	No.2	SPF

DRY: SEASONED LUMBER.

PLATES (table is in inches)

JT	TYPE	PLATES	W	LEN	Y	X
B	TMBH1-I	MT20	3.0	4.0	1.50	0.50

NOTE: Lateral brace(s) shown shall be 2x4 SPF #2

LICENSED PROFESSIONAL ENGINEER
11/11/2019
R. TURENNE
100157040
PROVINCE OF ONTARIO

DIMENSIONS, SUPPORTS AND LOADINGS SPECIFIED BY FABRICATOR TO BE VERIFIED BY BUILDING DESIGNER

BEARINGS

JT	FACTORED GROSS REACTION VERT	HORZ	MAXIMUM FACTORED GROSS REACTION DOWN	HORZ	UPLIFT	INPUT BRG IN-SX	REQRD BRG IN-SX	HEEL WEDGE
B	274	0	274	0	0	4-0	1-8	2x4 L
F	59	0	59	0	0	5-8	1-8	
C	175	0	175	0	0	5-8	5-8	

BEVELED PLATE OR SHIM REQUIRED TO PROVIDE FULL BEARING SURFACE WITH TRUSS CHORD AT JT(S): C

UNFACTORED REACTIONS

JT	1ST LCASE COMBINED	MAX./MIN. COMPONENT REACTIONS SNOW	LIVE	PERM.LIVE	WIND	DEAD	SOIL
B	192	135 / 0	0 / 0	0 / 0	0 / 0	57 / 0	0 / 0
F	45	13 / 0	0 / 0	0 / 0	0 / 0	33 / 0	0 / 0
C	121	94 / 0	0 / 0	0 / 0	0 / 0	28 / 0	0 / 0

BEARING MATERIAL TO BE SPF NO.2 OR BETTER AT JOINT(S) B, F, C

BRACING

TOP CHORD TO BE SHEATHED OR MAX. PURLIN SPACING = 6.25 FT.
MAX. UNBRACED BOTTOM CHORD LENGTH = 10.00 FT OR RIGID CEILING DIRECTLY APPLIED.

ALL PITCH BREAKS AND PERIMETER CORNER JOINTS MUST BE LATERALLY RESTRAINED.

LOADING

TOTAL LOAD CASES: (5)

CHORDS

MEMB. FR-TO	MAX. FACTORED FORCE (LBS)	VERT. LOAD LC1 (PLF) FROM	TO	MAX CSI (LC)	MAX. UNBRAC LENGTH
A- B	0 / 16	-84.9	-84.9	0.13 (5)	10.00
B- H	-17 / 0	-84.9	-84.9	0.02 (4)	6.25
H- C	0 / 2	-84.9	-84.9	0.10 (1)	10.00
C- D	-14 / 0	-84.9	-84.9	0.03 (1)	6.25
B- G	0 / 0	-18.5	-18.5	0.08 (1)	10.00
G- F	0 / 0	-18.5	-18.5	0.08 (1)	10.00
F- E	0 / 0	-18.5	-18.5	0.01 (4)	10.00

WEBS

MEMB. FR-TO	MAX. FACTORED FORCE (LBS)	MAX CSI (LC)
G- H	-117 / 2	0.00 (1)

CANTILEVER ANALYSIS HAS BEEN CONSIDERED IN THIS DESIGN

DESIGN CRITERIA

SPECIFIED LOADS:

TOP CH.	LL =	23.3	PSF
	DL =	6.0	PSF
BOT CH.	LL =	0.0	PSF
	DL =	7.4	PSF
TOTAL LOAD	=	36.7	PSF

SPACING = 24.0 IN. C/C

THIS TRUSS IS DESIGNED FOR RESIDENTIAL OR SMALL BUILDING REQUIREMENTS OF PART 9, NBCC 2010, NBCC 2015

THIS DESIGN COMPLIES WITH:
- PART 9 OF BCBC 2018 , OBC 2012 , ABC 2019
- CSA 086-09, CSA 086-14
- TPIC 2011, TPIC 2014

(55 % OF 27.2 P.S.F. G.S.L. PLUS 8.4 P.S.F. RAIN LOAD) EQUALS 23.3 P.S.F. SPECIFIED ROOF LIVE LOAD

ALLOWABLE DEFL.(LL)= L/360 (0.19")
CALCULATED VERT. DEFL.(LL) = L/ 999 (0.01")
ALLOWABLE DEFL.(TL)= L/360 (0.19")
CALCULATED VERT. DEFL.(TL) = L/ 999 (0.01")

CANTILEVER DEFLECTION:
ALLOWABLE DEFL.(TL)= L/120 (0.19")
CALCULATED VERT. DEFL.(TL) = L/ 999 (0.00")

CSI: TC=0.13/1.00 (A-B:5) , BC=0.08/1.00 (F-G:1) , WB=0.00/1.00 (G-H:1) , SSI=0.10/1.00 (A-B:5)

DOL LUMBER=1.00 NAIL=1.00 LS BEND=1.10 COMP=1.10 SHEAR=1.10 TENS= 1.10

COMPANION LIVE LOAD FACTOR = 1.00

TRUSS PLATE MANUFACTURER IS NOT RESPONSIBLE FOR QUALITY CONTROL IN THE TRUSS MANUFACTURING PLANT .

NAIL VALUES

PLATE	GRIP(DRY) (PSI) MAX	MIN	SHEAR (PLI) MAX	MIN	SECTION (PLI) MAX	MIN
MT20	618	354	1667	788	1987	1656

PLATE PLACEMENT TOL. = 0.250 inches

PLATE ROTATION TOL. = 5.0 Deg.

JSI GRIP= 0.89 (B) (INPUT = 0.90)
JSI METAL= 0.05 (B) (INPUT = 1.00)

JOB NAME	TRUSS NAME	QUANTITY	PLY	JOB DESC.	DRWG NO.
310385	H2		1	TRUSS DESC. JT-39002	E-19072227

Alpa Roof Truss, Maple

Version 8.300 S May 10 2019 MiTek Industries, Inc. Wed Jul 10 10:24:21 2019 Page 1
ID:MF8liriaTok7DlbpT4B71Xys4PG-_8qg8xPHXxCPnIod8hKid9vCSL?JH2LHmbuOBMyzW1e

Scale = 1:42.5

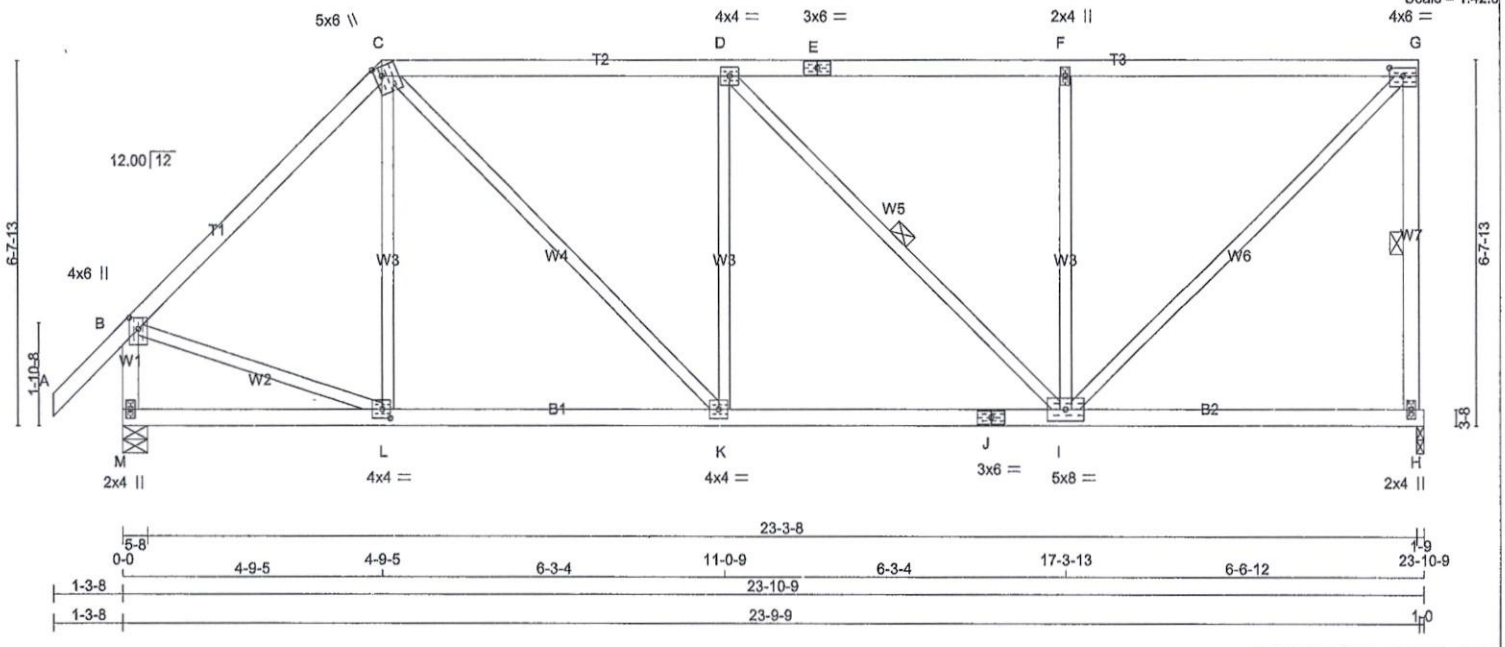

TOTAL WEIGHT = 4 X 107 = 429 lb [M]

LUMBER
N. L. G. A. RULES

CHORDS	SIZE		LUMBER	DESCR.
A - C	2x4	DRY	No.2	SPF
C - E	2x4	DRY	No.2	SPF
E - G	2x4	DRY	No.2	SPF
H - G	2x4	DRY	No.2	SPF
M - B	2x4	DRY	No.2	SPF
M - J	2x4	DRY	No.2	SPF
J - H	2x4	DRY	No.2	SPF
ALL WEBS EXCEPT	2x3	DRY	No.2	SPF

DRY: SEASONED LUMBER.

PLATES (table Is In Inches)

JT	TYPE	PLATES	W	LEN	Y	X
B	TMVW+p	MT20	4.0	6.0	2.50	2.00
C	TTWW+m	MT20	5.0	6.0	2.00	1.50
D	TMWW-t	MT20	4.0	4.0		
E	TS-t	MT20	3.0	6.0		
F	TMW+w	MT20	2.0	4.0		
G	TMVW-t	MT20	4.0	6.0	1.75	3.00
H	BMV1+p	MT20	2.0	4.0		
I	BMWWW-t	MT20	5.0	8.0		
J	BS-t	MT20	3.0	6.0		
K	BMWW-t	MT20	4.0	4.0		
L	BMWW-t	MT20	4.0	4.0	2.00	1.75
M	BMV1+p	MT20	2.0	4.0		

NOTES- (1)

NOTE: Lateral brace(s) shown shall be 2x4 SPF #2

LICENSED PROFESSIONAL ENGINEER
07/10/2019
R. TURENNE
100157040
PROVINCE OF ONTARIO

DIMENSIONS, SUPPORTS AND LOADINGS SPECIFIED BY FABRICATOR TO BE VERIFIED BY BUILDING DESIGNER

BEARINGS

JT	FACTORED GROSS REACTION VERT	HORZ	MAXIMUM FACTORED GROSS REACTION DOWN	HORZ	UPLIFT	INPUT BRG IN-SX	REQRD BRG IN-SX
H	1230	0	1230	0	0	1-9	1-8
M	1348	0	1348	0	0	5-8	2-0

UNFACTORED REACTIONS

JT	1ST LCASE COMBINED	MAX./MIN. COMPONENT REACTIONS SNOW	LIVE	PERM.LIVE	WIND	DEAD	SOIL
H	873	554 / 0	0 / 0	0 / 0	0 / 0	319 / 0	0 / 0
M	955	619 / 0	0 / 0	0 / 0	0 / 0	336 / 0	0 / 0

BEARING MATERIAL TO BE SPF NO.2 OR BETTER AT JOINT(S) H, M

BRACING
TOP CHORD TO BE SHEATHED OR MAX. PURLIN SPACING = 5.14 FT.
MAX. UNBRACED BOTTOM CHORD LENGTH = 10.00 FT OR RIGID CEILING DIRECTLY APPLIED.

ALL PITCH BREAKS AND PERIMETER CORNER JOINTS MUST BE LATERALLY RESTRAINED.

1 LATERAL BRACE(S) AT 1/ 2 LENGTH OF G-H, D-I.

END VERTICAL(S) MUST BE SHEATHED OR HAVE BRACES AS INDICATED IN THE MAX. UNBRACED LENGTH COLUMN OF THE TABLE BELOW

LOADING
TOTAL LOAD CASES: (4)

CHORDS

MEMB. FR-TO	MAX. FACTORED FORCE (LBS)	FACTORED VERT. LOAD (PLF) FROM	TO	LC1 CSI (LC)	MAX UNBRAC LENGTH
A- B	0 / 42	-84.9	-84.9	0.12 (1)	10.00
B- C	-1069 / 0	-84.9	-84.9	0.39 (1)	5.60
C- D	-1203 / 0	-84.9	-84.9	0.51 (1)	5.14
D- E	-977 / 0	-84.9	-84.9	0.52 (1)	5.53
E- F	-977 / 0	-84.9	-84.9	0.52 (1)	5.53
F- G	-977 / 0	-84.9	-84.9	0.52 (1)	5.53
H- G	-1181 / 0	0.0	0.0	0.24 (1)	5.87
M- B	-1315 / 0	0.0	0.0	0.15 (1)	7.05
M- L	0 / 0	-18.5	-18.5	0.13 (4)	10.00
L- K	0 / 752	-18.5	-18.5	0.20 (4)	10.00
K- J	0 / 1203	-18.5	-18.5	0.29 (1)	10.00
J- I	0 / 1203	-18.5	-18.5	0.29 (1)	10.00
I- H	0 / 0	-18.5	-18.5	0.18 (4)	10.00

WEBS

MEMB. FR-TO	MAX. FACTORED FORCE (LBS)	MAX CSI (LC)
L- C	-120 / 41	0.09 (1)
C- K	0 / 642	0.14 (1)
K- D	-345 / 0	0.25 (1)
D- I	-323 / 0	0.18 (1)
I- F	-596 / 0	0.44 (1)
I- G	0 / 1368	0.31 (1)
B- L	0 / 790	0.18 (1)

DESIGN CRITERIA

SPECIFIED LOADS:

TOP CH.	LL	=	23.3	PSF
	DL	=	6.0	PSF
BOT CH.	LL	=	0.0	PSF
	DL	=	7.4	PSF
TOTAL LOAD		=	36.7	PSF

SPACING = 24.0 IN. C/C

LOADING IN FLAT SECTION BASED ON A SLOPE OF 2.00/12 MINIMUM

THIS TRUSS IS DESIGNED FOR RESIDENTIAL OR SMALL BUILDING REQUIREMENTS OF PART 9, NBCC 2010, NBCC 2015

THIS DESIGN COMPLIES WITH:
- PART 9 OF BCBC 2018 , OBC 2012
- CSA 086-09, CSA 086-14
- TPIC 2011, TPIC 2014

(55 % OF 27.2 P.S.F. G.S.L. PLUS 8.4 P.S.F. RAIN LOAD) EQUALS 23.3 P.S.F. SPECIFIED ROOF LIVE LOAD

ALLOWABLE DEFL.(LL)= L/360 (0.79")
CALCULATED VERT. DEFL.(LL) = L/ 999 (0.04")
ALLOWABLE DEFL.(TL)= L/360 (0.79")
CALCULATED VERT. DEFL.(TL) = L/ 999 (0.09")

CSI: TC=0.52/1.00 (F-G:1) , BC=0.29/1.00 (I-K:1) , WB=0.44/1.00 (F-I:1) , SSI=0.26/1.00 (F-G:1)

DOL LUMBER=1.00 NAIL=1.00 LS BEND=1.10 COMP=1.10 SHEAR=1.10 TENS= 1.10

COMPANION LIVE LOAD FACTOR = 1.00

TRUSS PLATE MANUFACTURER IS NOT RESPONSIBLE FOR QUALITY CONTROL IN THE TRUSS MANUFACTURING PLANT .

NAIL VALUES

PLATE	GRIP(DRY) (PSI) MAX	MIN	SHEAR (PLI) MAX	MIN	SECTION (PLI) MAX	MIN
MT20	618	354	1667	788	1987	1656

PLATE PLACEMENT TOL. = 0.250 Inches

PLATE ROTATION TOL. = 5.0 Deg.

JSI GRIP= 0.80 (L) (INPUT = 0.90)
JSI METAL= 0.48 (B) (INPUT = 1.00)

JOB NAME	TRUSS NAME	QUANTITY	PLY	JOB DESC.		DRWG NO.
310385	H3		1	TRUSS DESC.	JT-39002	E-19072228

Alpa Roof Truss, Maple

Version 8.300 S May 10 2019 MiTek Industries, Inc. Wed Jul 10 10:24:22 2019 Page 1
ID:MF8iiriaTok7DIbpT4B71Xys4PG-TKO2MHQvlFKGPSNplOrxAMRJQIlJ0WZQ?FeyjoyzW1d
Scale = 1:48.7

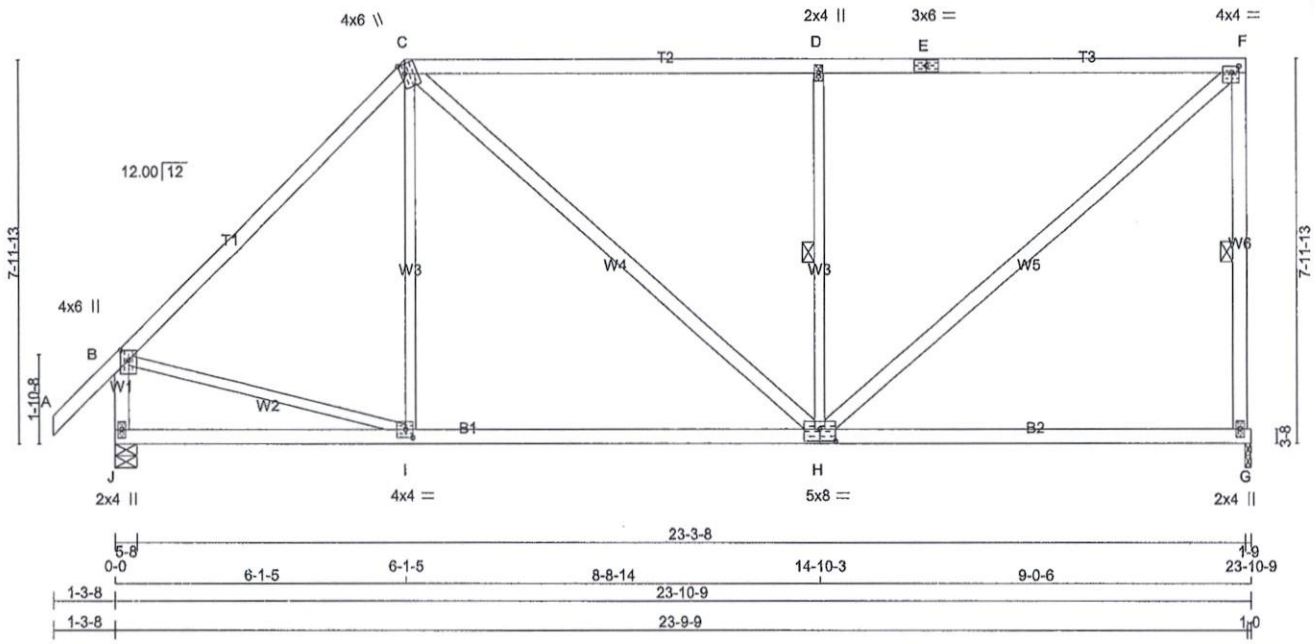

TOTAL WEIGHT = 4 X 112 = 450 lb

[M]

LUMBER
N. L. G. A. RULES

CHORDS	SIZE		LUMBER	DESCR.
A - C	2x4	DRY	2100F 1.8E	SPF
C - E	2x4	DRY	2100F 1.8E	SPF
E - F	2x4	DRY	2100F 1.8E	SPF
G - F	2x4	DRY	No.2	SPF
J - B	2x4	DRY	No.2	SPF
J - H	2x4	DRY	No.2	SPF
H - G	2x4	DRY	No.2	SPF
ALL WEBS	2x3	DRY	No.2	SPF
EXCEPT				
C - H	2x4	DRY	No.2	SPF
H - F	2x4	DRY	No.2	SPF

DRY: SEASONED LUMBER.

PLATES (table is in inches)

JT	TYPE	PLATES	W	LEN	Y	X
B	TMVW+p	MT20	4.0	6.0	2.50	2.00
C	TTWW+m	MT20	4.0	6.0	Edge	1.00
D	TMW+w	MT20	2.0	4.0		
E	TS-t	MT20	3.0	6.0		
F	TMVW-t	MT20	4.0	4.0	1.50	1.75
G	BMV1+p	MT20	2.0	4.0		
H	BSWWW-I	MT20	5.0	8.0	3.00	4.00
I	BMWW-t	MT20	4.0	4.0	2.00	1.75
J	BMV1+p	MT20	2.0	4.0		

Edge - INDICATES REFERENCE CORNER OF PLATE TOUCHES EDGE OF CHORD.

NOTES- (1)

NOTE: Lateral brace(s) shown shall be 2x4 SPF #2

LICENSED PROFESSIONAL ENGINEER
07/10/2019
R. TURENNE
100157040
PROVINCE OF ONTARIO

DIMENSIONS, SUPPORTS AND LOADINGS SPECIFIED BY FABRICATOR TO BE VERIFIED BY BUILDING DESIGNER

BEARINGS

JT	FACTORED GROSS REACTION VERT	HORZ	MAXIMUM FACTORED GROSS REACTION DOWN	HORZ	UPLIFT	INPUT BRG IN-SX	REQRD BRG IN-SX
G	1230	0	1230	0	0	1-9	1-8
J	1348	0	1348	0	0	5-8	2-0

UNFACTORED REACTIONS

JT	1ST LCASE COMBINED	MAX./MIN. COMPONENT REACTIONS SNOW	LIVE	PERM.LIVE	WIND	DEAD	SOIL
G	873	554 / 0	0 / 0	0 / 0	0 / 0	319 / 0	0 / 0
J	955	619 / 0	0 / 0	0 / 0	0 / 0	336 / 0	0 / 0

BEARING MATERIAL TO BE SPF NO.2 OR BETTER AT JOINT(S) G, J

BRACING
TOP CHORD TO BE SHEATHED OR MAX. PURLIN SPACING = 5.62 FT.
MAX. UNBRACED BOTTOM CHORD LENGTH = 10.00 FT OR RIGID CEILING DIRECTLY APPLIED.

ALL PITCH BREAKS AND PERIMETER CORNER JOINTS MUST BE LATERALLY RESTRAINED.

1 LATERAL BRACE(S) AT 1/ 2 LENGTH OF F-G, D-H.

END VERTICAL(S) MUST BE SHEATHED OR HAVE BRACES AS INDICATED IN THE MAX. UNBRACED LENGTH COLUMN OF THE TABLE BELOW

LOADING
TOTAL LOAD CASES: (4)

CHORDS

MEMB. FR-TO	MAX. FACTORED FORCE (LBS)	FACTORED VERT. LOAD LC1 (PLF) FROM	TO	MAX CSI (LC)	MAX. UNBRAC LENGTH
A- B	0 / 42	-84.9	-84.9	0.08 (1)	10.00
B- C	-1060 / 0	-84.9	-84.9	0.41 (1)	6.25
C- D	-999 / 0	-84.9	-84.9	0.82 (1)	5.62
D- E	-999 / 0	-84.9	-84.9	0.83 (1)	5.62
E- F	-999 / 0	-84.9	-84.9	0.83 (1)	5.62
G- F	-1147 / 0	0.0	0.0	0.33 (1)	5.94
J- B	-1312 / 0	0.0	0.0	0.15 (1)	7.06
J- I	0 / 0	-18.5	-18.5	0.32 (4)	10.00
I- H	0 / 748	-18.5	-18.5	0.39 (4)	10.00
H- G	0 / 0	-18.5	-18.5	0.43 (4)	10.00

WEBS

MEMB. FR-TO	MAX. FACTORED FORCE (LBS)	MAX CSI (LC)
I- C	-9 / 126	0.04 (4)
C- H	0 / 334	0.05 (1)
H- D	-932 / 0	0.37 (1)
H- F	0 / 1317	0.21 (1)
B- I	0 / 770	0.17 (1)

DESIGN CRITERIA

SPECIFIED LOADS:

TOP CH.	LL =	23.3	PSF
	DL =	6.0	PSF
BOT CH.	LL =	0.0	PSF
	DL =	7.4	PSF
TOTAL LOAD	=	36.7	PSF

SPACING = 24.0 IN. C/C

LOADING IN FLAT SECTION BASED ON A SLOPE OF 2.00/12 MINIMUM

THIS TRUSS IS DESIGNED FOR RESIDENTIAL OR SMALL BUILDING REQUIREMENTS OF PART 9, NBCC 2010, NBCC 2015

THIS DESIGN COMPLIES WITH:
- PART 9 OF BCBC 2018 , OBC 2012
- CSA 086-09, CSA 086-14
- TPIC 2011, TPIC 2014

(55 % OF 27.2 P.S.F. G.S.L. PLUS 8.4 P.S.F. RAIN LOAD) EQUALS 23.3 P.S.F. SPECIFIED ROOF LIVE LOAD

ALLOWABLE DEFL.(LL)= L/360 (0.79")
CALCULATED VERT. DEFL.(LL) = L/ 999 (0.03")
ALLOWABLE DEFL.(TL)= L/360 (0.79")
CALCULATED VERT. DEFL.(TL) = L/ 897 (0.32")

CSI: TC=0.83/1.00 (D-F:1) , BC=0.43/1.00 (G-H:4) , WB=0.37/1.00 (D-H:1) , SSI=0.37/1.00 (D-F:1)

DOL LUMBER=1.00 NAIL=1.00 LS BEND=1.10 COMP=1.10 SHEAR=1.10 TENS= 1.10

COMPANION LIVE LOAD FACTOR = 1.00

TRUSS PLATE MANUFACTURER IS NOT RESPONSIBLE FOR QUALITY CONTROL IN THE TRUSS MANUFACTURING PLANT .

NAIL VALUES

PLATE	GRIP(DRY) (PSI) MAX	MIN	SHEAR (PLI) MAX	MIN	SECTION (PLI) MAX	MIN
MT20	618	354	1667	788	1987	1656

PLATE PLACEMENT TOL. = 0.250 Inches

PLATE ROTATION TOL. = 5.0 Deg.

JSI GRIP= 0.86 (I) (INPUT = 0.90)
JSI METAL= 0.49 (B) (INPUT = 1.00)

JOB NAME	TRUSS NAME	QUANTITY	PLY	JOB DESC.	DRWG NO.
310385	H4		1	TRUSS DESC. JT-39002	E-19072229

Alpa Roof Truss, Maple

Version 8.300 S May 10 2019 MiTek Industries, Inc. Wed Jul 10 10:24:23 2019 Page 1
ID:MF8liriaTok7DlbpT4B71Xys4PG-xWyRZdRX2ZS70cy?G6MAia_TL8eFlqAaEvNVFFyzW1c

Scale = 1:52.7

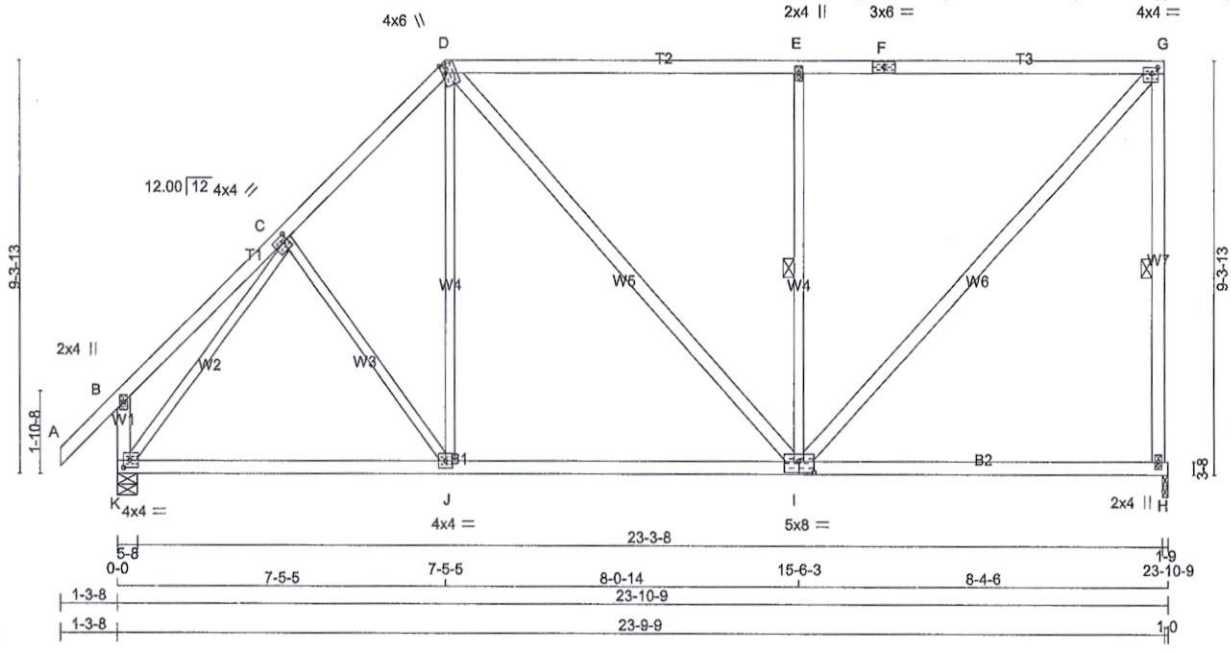

TOTAL WEIGHT = 4 X 123 = 491 lb

[M]

LUMBER

N. L. G. A. RULES

CHORDS	SIZE		LUMBER	DESCR.
A - D	2x4	DRY	No.2	SPF
D - F	2x4	DRY	1650F 1.5E	SPF
F - G	2x4	DRY	1650F 1.5E	SPF
H - G	2x4	DRY	No.2	SPF
K - B	2x4	DRY	No.2	SPF
K - I	2x4	DRY	No.2	SPF
I - H	2x4	DRY	No.2	SPF
ALL WEBS EXCEPT	2x3	DRY	No.2	SPF
D - I	2x4	DRY	No.2	SPF
I - G	2x4	DRY	No.2	SPF

DRY: SEASONED LUMBER.

PLATES (table is in inches)

JT	TYPE	PLATES	W	LEN	Y	X
B	TMV+p	MT20	2.0	4.0		
C	TMWW-t	MT20	4.0	4.0	1.75	1.25
D	TTWW+m	MT20	4.0	6.0	Edge	1.00
E	TMW+w	MT20	2.0	4.0		
F	TS-t	MT20	3.0	6.0		
G	TMVW-t	MT20	4.0	4.0	1.75	1.75
H	BMV1+p	MT20	2.0	4.0		
I	BSWWW-I	MT20	5.0	8.0	3.00	4.00
J	BMWW-t	MT20	4.0	4.0		
K	BMVW1-t	MT20	4.0	4.0	2.00	1.75

Edge - INDICATES REFERENCE CORNER OF PLATE TOUCHES EDGE OF CHORD.

NOTES- (1)

NOTE: Lateral brace(s) shown shall be 2x4 SPF #2

LICENSED PROFESSIONAL ENGINEER
07/10/2019
R. TURENNE
100157040
PROVINCE OF ONTARIO

DIMENSIONS, SUPPORTS AND LOADINGS SPECIFIED BY FABRICATOR TO BE VERIFIED BY BUILDING DESIGNER

BEARINGS

JT	FACTORED GROSS REACTION VERT	HORZ	MAXIMUM FACTORED GROSS REACTION DOWN	HORZ	UPLIFT	INPUT BRG IN-SX	REQRD BRG IN-SX
H	1230	0	1230	0	0	1-9	1-8
K	1348	0	1348	0	0	5-8	1-8

UNFACTORED REACTIONS

JT	1ST LCASE COMBINED	MAX./MIN. COMPONENT REACTIONS SNOW	LIVE	PERM.LIVE	WIND	DEAD	SOIL
H	873	554 / 0	0 / 0	0 / 0	0 / 0	319 / 0	0 / 0
K	955	619 / 0	0 / 0	0 / 0	0 / 0	336 / 0	0 / 0

BEARING MATERIAL TO BE SPF NO.2 OR BETTER AT JOINT(S) H, K

BRACING

TOP CHORD TO BE SHEATHED OR MAX. PURLIN SPACING = 5.35 FT.
MAX. UNBRACED BOTTOM CHORD LENGTH = 10.00 FT OR RIGID CEILING DIRECTLY APPLIED.

ALL PITCH BREAKS AND PERIMETER CORNER JOINTS MUST BE LATERALLY RESTRAINED.

1 LATERAL BRACE(S) AT 1/ 2 LENGTH OF G-H, E-I.

END VERTICAL(S) MUST BE SHEATHED OR HAVE BRACES AS INDICATED IN THE MAX. UNBRACED LENGTH COLUMN OF THE TABLE BELOW

LOADING

TOTAL LOAD CASES: (4)

CHORDS

MEMB. FR-TO	MAX. FACTORED FORCE (LBS)	FACTORED VERT. LOAD LC1 (PLF) FROM	TO	MAX CSI (LC)	MAX. UNBRAC LENGTH
A- B	0 / 42	-84.9	-84.9	0.12 (1)	10.00
B- C	0 / 26	-84.9	-84.9	0.19 (1)	10.00
C- D	-1037 / 0	-84.9	-84.9	0.21 (1)	5.91
D- E	-813 / 0	-84.9	-84.9	0.88 (1)	5.35
E- F	-813 / 0	-84.9	-84.9	0.88 (1)	5.35
F- G	-813 / 0	-84.9	-84.9	0.88 (1)	5.35
H- G	-1153 / 0	0.0	0.0	0.47 (1)	5.93
K- B	-238 / 0	0.0	0.0	0.03 (1)	7.81
K- J	0 / 748	-18.5	-18.5	0.39 (4)	10.00
J- I	0 / 715	-18.5	-18.5	0.39 (4)	10.00
I- H	0 / 0	-18.5	-18.5	0.37 (4)	10.00

WEBS

MEMB. FR-TO	MAX. FACTORED FORCE (LBS)	MAX CSI (LC)
C- J	-60 / 21	0.05 (1)
J- D	0 / 226	0.06 (4)
D- I	0 / 147	0.02 (1)
I- E	-862 / 0	0.49 (1)
I- G	0 / 1203	0.19 (1)
K- C	-1296 / 0	0.93 (1)

DESIGN CRITERIA

SPECIFIED LOADS:

TOP CH.	LL =	23.3	PSF
	DL =	6.0	PSF
BOT CH.	LL =	0.0	PSF
	DL =	7.4	PSF
TOTAL LOAD	=	36.7	PSF

SPACING = 24.0 IN. C/C

LOADING IN FLAT SECTION BASED ON A SLOPE OF 2.00/12 MINIMUM

THIS TRUSS IS DESIGNED FOR RESIDENTIAL OR SMALL BUILDING REQUIREMENTS OF PART 9, NBCC 2010, NBCC 2015

THIS DESIGN COMPLIES WITH:
- PART 9 OF BCBC 2018 , OBC 2012
- CSA 086-09, CSA 086-14
- TPIC 2011, TPIC 2014

(55 % OF 27.2 P.S.F. G.S.L. PLUS 8.4 P.S.F. RAIN LOAD) EQUALS 23.3 P.S.F. SPECIFIED ROOF LIVE LOAD

ALLOWABLE DEFL.(LL)= L/360 (0.79")
CALCULATED VERT. DEFL.(LL) = L/ 999 (0.03")
ALLOWABLE DEFL.(TL)= L/360 (0.79")
CALCULATED VERT. DEFL.(TL) = L/ 999 (0.24")

CSI: TC=0.88/1.00 (E-G:1) , BC=0.39/1.00 (I-J:4) , WB=0.93/1.00 (C-K:1) , SSI=0.34/1.00 (E-G:1)

DOL LUMBER=1.00 NAIL=1.00 LS BEND=1.10 COMP=1.10 SHEAR=1.10 TENS= 1.10

COMPANION LIVE LOAD FACTOR = 1.00

TRUSS PLATE MANUFACTURER IS NOT RESPONSIBLE FOR QUALITY CONTROL IN THE TRUSS MANUFACTURING PLANT .

NAIL VALUES

PLATE	GRIP(DRY) (PSI) MAX	MIN	SHEAR (PLI) MAX	MIN	SECTION (PLI) MAX	MIN
MT20	618	354	1667	788	1987	1656

PLATE PLACEMENT TOL. = 0.250 Inches

PLATE ROTATION TOL. = 5.0 Deg.

JSI GRIP= 0.89 (K) (INPUT = 0.90)
JSI METAL= 0.48 (C) (INPUT = 1.00)

JOB NAME	TRUSS NAME	QUANTITY	PLY	JOB DESC.		DRWG NO.
310385	H5		1	TRUSS DESC.	JT-39002	E-19072230

Alpa Roof Truss, Maple

Version 8.300 S May 10 2019 MiTek Industries, Inc. Thu Jul 11 09:24:40 2019 Page 1
ID:MF8ilriaTok7DlbpT4B71Xys4PG-a9ag2dhkX4XM9pdmHff3j?WIOB_jQTkWz5JJUYyzBpb
Scale = 1:60.1

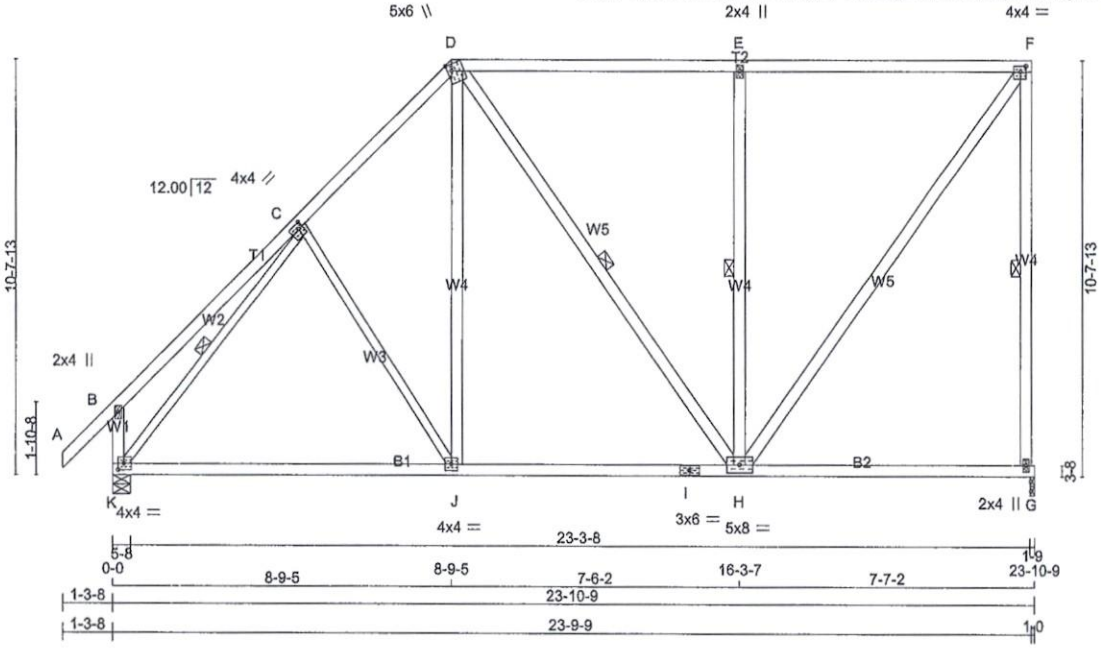

TOTAL WEIGHT = 6 X 137 = 823 lb
[M]

LUMBER
N. L. G. A. RULES

CHORDS	SIZE		LUMBER	DESCR.
A - D	2x4	DRY	No.2	SPF
D - F	2x4	DRY	No.2	SPF
G - F	2x4	DRY	No.2	SPF
K - B	2x4	DRY	No.2	SPF
K - I	2x4	DRY	No.2	SPF
I - G	2x4	DRY	No.2	SPF
ALL WEBS EXCEPT	2x4	DRY	No.2	SPF
C - J	2x3	DRY	No.2	SPF
K - C	2x3	DRY	No.2	SPF

DRY: SEASONED LUMBER.

PLATES (table is in inches)

JT	TYPE	PLATES	W	LEN	Y	X
B	TMV+p	MT20	2.0	4.0		
C	TMWW-t	MT20	4.0	4.0	1.75	1.25
D	TTWW+m	MT20	5.0	6.0	2.00	1.25
E	TMW+w	MT20	2.0	4.0		
F	TMVW-t	MT20	4.0	4.0	1.75	1.75
G	BMV1+p	MT20	2.0	4.0		
H	BMWWW-t	MT20	5.0	8.0		
I	BS-t	MT20	3.0	6.0		
J	BMWW-t	MT20	4.0	4.0		
K	BMVW1-t	MT20	4.0	4.0	2.00	1.75

NOTES- (1)

NOTE: Lateral brace(s) shown shall be 2x4 SPF #2

LICENSED PROFESSIONAL ENGINEER
07/11/2019
R. TURENNE
100157040
PROVINCE OF ONTARIO

DIMENSIONS, SUPPORTS AND LOADINGS SPECIFIED BY FABRICATOR TO BE VERIFIED BY BUILDING DESIGNER

BEARINGS

JT	FACTORED GROSS REACTION VERT	HORZ	MAXIMUM FACTORED GROSS REACTION DOWN	HORZ	UPLIFT	INPUT BRG IN-SX	REQRD BRG IN-SX
G	1230	0	1230	0	0	1-9	1-8
K	1348	0	1348	0	0	5-8	1-8

UNFACTORED REACTIONS

JT	1ST LCASE COMBINED	MAX./MIN. COMPONENT REACTIONS SNOW	LIVE	PERM.LIVE	WIND	DEAD	SOIL
G	873	554 / 0	0 / 0	0 / 0	0 / 0	319 / 0	0 / 0
K	955	619 / 0	0 / 0	0 / 0	0 / 0	336 / 0	0 / 0

BEARING MATERIAL TO BE SPF NO.2 OR BETTER AT JOINT(S) G, K

BRACING
TOP CHORD TO BE SHEATHED OR MAX. PURLIN SPACING = 5.10 FT.
MAX. UNBRACED BOTTOM CHORD LENGTH = 10.00 FT OR RIGID CEILING DIRECTLY APPLIED.

ALL PITCH BREAKS AND PERIMETER CORNER JOINTS MUST BE LATERALLY RESTRAINED.

1 LATERAL BRACE(S) AT 1/ 2 LENGTH OF F-G, D-H, E-H, C-K.

END VERTICAL(S) MUST BE SHEATHED OR HAVE BRACES AS INDICATED IN THE MAX. UNBRACED LENGTH COLUMN OF THE TABLE BELOW

LOADING
TOTAL LOAD CASES: (4)

CHORDS

MEMB. FR-TO	MAX. FACTORED FORCE (LBS)	FACTORED VERT. LOAD LC1 (PLF) FROM	TO	MAX CSI (LC)	MAX. UNBRAC LENGTH
A- B	0 / 42	-84.9	-84.9	0.12 (1)	10.00
B- C	0 / 29	-84.9	-84.9	0.27 (1)	10.00
C- D	-984 / 0	-84.9	-84.9	0.30 (1)	5.90
D- E	-675 / 0	-84.9	-84.9	0.88 (1)	5.10
E- F	-676 / 0	-84.9	-84.9	0.88 (1)	5.10
G- F	-1172 / 0	0.0	0.0	0.67 (1)	5.90
K- B	-279 / 0	0.0	0.0	0.03 (1)	7.81
K- J	0 / 759	-18.5	-18.5	0.38 (4)	10.00
J- I	0 / 673	-18.5	-18.5	0.38 (4)	10.00
I- H	0 / 673	-18.5	-18.5	0.38 (4)	10.00
H- G	0 / 0	-18.5	-18.5	0.22 (4)	10.00

WEBS

MEMB. FR-TO	MAX. FACTORED FORCE (LBS)	MAX CSI (LC)
C- J	-162 / 0	0.18 (1)
J- D	0 / 306	0.05 (1)
D- H	-21 / 4	0.02 (4)
H- E	-792 / 0	0.45 (1)
H- F	0 / 1151	0.19 (1)
K- C	-1257 / 0	0.52 (1)

DESIGN CRITERIA

SPECIFIED LOADS:

TOP CH.	LL	=	23.3	PSF
	DL	=	6.0	PSF
BOT CH.	LL	=	0.0	PSF
	DL	=	7.4	PSF
TOTAL LOAD		=	36.7	PSF

SPACING = 24.0 IN. C/C

LOADING IN FLAT SECTION BASED ON A SLOPE OF 2.00/12 MINIMUM

THIS TRUSS IS DESIGNED FOR RESIDENTIAL OR SMALL BUILDING REQUIREMENTS OF PART 9, NBCC 2010, NBCC 2015

THIS DESIGN COMPLIES WITH:
- PART 9 OF BCBC 2018 , OBC 2012
- CSA 086-09, CSA 086-14
- TPIC 2011, TPIC 2014

(55 % OF 27.2 P.S.F. G.S.L. PLUS 8.4 P.S.F. RAIN LOAD) EQUALS 23.3 P.S.F. SPECIFIED ROOF LIVE LOAD

ALLOWABLE DEFL.(LL)= L/360 (0.79")
CALCULATED VERT. DEFL.(LL) = L/ 999 (0.03")
ALLOWABLE DEFL.(TL)= L/360 (0.79")
CALCULATED VERT. DEFL.(TL) = L/ 999 (0.19")

CSI: TC=0.88/1.00 (E-F:1) , BC=0.38/1.00 (J-K:4) , WB=0.52/1.00 (C-K:1) , SSI=0.31/1.00 (E-F:1)

DOL LUMBER=1.00 NAIL=1.00 LS BEND=1.10 COMP=1.10 SHEAR=1.10 TENS= 1.10

COMPANION LIVE LOAD FACTOR = 1.00

TRUSS PLATE MANUFACTURER IS NOT RESPONSIBLE FOR QUALITY CONTROL IN THE TRUSS MANUFACTURING PLANT .

NAIL VALUES

PLATE	GRIP(DRY) (PSI) MAX	MIN	SHEAR (PLI) MAX	MIN	SECTION (PLI) MAX	MIN
MT20	618	354	1667	788	1987	1656

PLATE PLACEMENT TOL. = 0.250 Inches

PLATE ROTATION TOL. = 5.0 Deg.

JSI GRIP= 0.87 (K) (INPUT = 0.90)
JSI METAL= 0.48 (C) (INPUT = 1.00)

JOB NAME	TRUSS NAME	QUANTITY	PLY	JOB DESC.		DRWG NO.
310385	J1		1	TRUSS DESC.	JT-39002	E-19072240

Alpa Roof Truss, Maple

Version 8.300 S May 10 2019 MiTek Industries, Inc. Wed Jul 10 10:24:38 2019 Page 1
ID:MF8iIriaTok7DlbpT4B71Xys4PG-?PM6jlcxWAL?KwbuelI7hpk67VBo4mqNngkWoHtyzW1N
Scale = 1:31.2

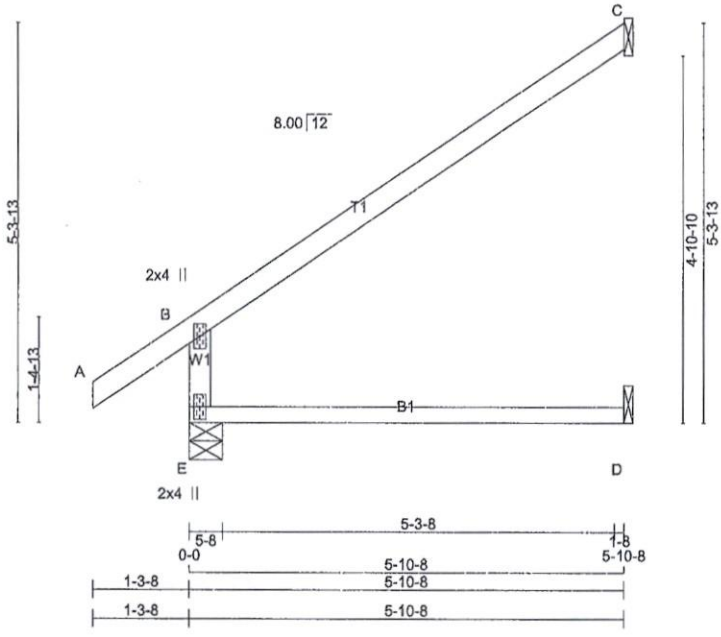

TOTAL WEIGHT = 24 X 16 = 384 lb

LUMBER
N. L. G. A. RULES

CHORDS	SIZE		LUMBER	DESCR.
E - B	2x4	DRY	No.2	SPF
A - C	2x4	DRY	No.2	SPF
E - D	2x3	DRY	No.2	SPF

DRY: SEASONED LUMBER.

PLATES (table Is In inches)

JT	TYPE	PLATES	W	LEN Y	X
B	TMV+p	MT20	2.0	4.0	
E	BMV1+p	MT20	2.0	4.0	

NOTES- (1)

NOTE: Lateral brace(s) shown shall be 2x4 SPF #2

LICENSED PROFESSIONAL ENGINEER
07/10/2019
R. TURENNE
100157040
PROVINCE OF ONTARIO

DIMENSIONS, SUPPORTS AND LOADINGS SPECIFIED BY FABRICATOR TO BE VERIFIED BY BUILDING DESIGNER

BEARINGS

JT	FACTORED GROSS REACTION VERT	HORZ	MAXIMUM FACTORED GROSS REACTION DOWN	HORZ	UPLIFT	INPUT BRG IN-SX	REQRD BRG IN-SX
E	494	0	494	0	0	5-8	1-8
C	187	0	187	0	0	1-8	1-8
D	43	0	48	0	0	1-8	1-8

SEE MITEK STANDARD DETAIL B97791H FOR CONNECTION TO JOINT(S) C , D

UNFACTORED REACTIONS

JT	1ST LCASE COMBINED	MAX./MIN. COMPONENT REACTIONS SNOW	LIVE	PERM.LIVE	WIND	DEAD	SOIL
E	348	235 / 0	0 / 0	0 / 0	0 / 0	113 / 0	0 / 0
C	129	103 / 0	0 / 0	0 / 0	0 / 0	26 / 0	0 / 0
D	34	0 / 0	0 / 0	0 / 0	0 / 0	34 / 0	0 / 0

BEARING MATERIAL TO BE SPF NO.2 OR BETTER AT JOINT(S) E

BRACING
TOP CHORD TO BE SHEATHED OR MAX. PURLIN SPACING = 6.25 FT.
MAX. UNBRACED BOTTOM CHORD LENGTH = 10.00 FT OR RIGID CEILING DIRECTLY APPLIED.

ALL PITCH BREAKS AND PERIMETER CORNER JOINTS MUST BE LATERALLY RESTRAINED.

LOADING
TOTAL LOAD CASES: (4)

CHORDS

MEMB. FR-TO	MAX. FACTORED FORCE (LBS)	FACTORED VERT. LOAD (PLF) FROM	TO	LC1 MAX CSI (LC)	MAX. UNBRAC LENGTH
E- B	-428 / 0	0.0	0.0	0.16 (4)	7.81
A- B	0 / 32	-84.9	-84.9	0.11 (1)	10.00
B- C	-35 / 0	-84.9	-84.9	0.50 (1)	6.25
E- D	0 / 0	-18.5	-18.5	0.30 (4)	10.00

WEBS

MEMB. FR-TO	MAX. FACTORED FORCE (LBS)	MAX CSI (LC)

DESIGN CRITERIA

SPECIFIED LOADS:

TOP CH.	LL	=	23.3	PSF
	DL	=	6.0	PSF
BOT CH.	LL	=	0.0	PSF
	DL	=	7.4	PSF
TOTAL LOAD		=	36.7	PSF

SPACING = 24.0 IN. C/C

THIS TRUSS IS DESIGNED FOR RESIDENTIAL OR SMALL BUILDING REQUIREMENTS OF PART 9, NBCC 2010, NBCC 2015

THIS DESIGN COMPLIES WITH:
- PART 9 OF BCBC 2018 , OBC 2012
- CSA 086-09, CSA 086-14
- TPIC 2011, TPIC 2014

DESIGN ASSUMPTIONS
-OVERHANG NOT TO BE ALTERED OR CUT OFF.

(55 % OF 27.2 P.S.F. G.S.L. PLUS 8.4 P.S.F. RAIN LOAD) EQUALS 23.3 P.S.F. SPECIFIED ROOF LIVE LOAD

ALLOWABLE DEFL.(LL)= L/360 (0.20")
CALCULATED VERT. DEFL.(LL) = L/ 999 (0.00")
ALLOWABLE DEFL.(TL)= L/360 (0.20")
CALCULATED VERT. DEFL.(TL) = L/ 932 (0.08")

CSI: TC=0.50/1.00 (B-C:1) , BC=0.30/1.00 (D-E:4) , WB=0.00/1.00 (n/a:0) , SSI=0.20/1.00 (B-C:1)

DOL LUMBER=1.00 NAIL=1.00 LS BEND=1.10 COMP=1.10 SHEAR=1.10 TENS= 1.10

COMPANION LIVE LOAD FACTOR = 1.00

TRUSS PLATE MANUFACTURER IS NOT RESPONSIBLE FOR QUALITY CONTROL IN THE TRUSS MANUFACTURING PLANT .

NAIL VALUES

PLATE	GRIP(DRY) (PSI) MAX	MIN	SHEAR (PLI) MAX	MIN	SECTION (PLI) MAX	MIN
MT20	618	354	1667	788	1987	1656

PLATE PLACEMENT TOL. = 0.250 Inches

PLATE ROTATION TOL. = 5.0 Deg.

JSI GRIP= 0.28 (B) (INPUT = 0.90)
JSI METAL= 0.22 (B) (INPUT = 1.00)

JOB NAME	TRUSS NAME	QUANTITY	PLY	JOB DESC.	DRWG NO.
310395	H6		1	TRUSS DESC. JT-39002	E-19072367

Alpa Roof Truss, Maple

Version 8.300 S May 10 2019 MiTek Industries, Inc. Thu Jul 11 11:22:22 2019 Page 1
ID:kx9I86OLlWqKxBYZIGBJHpysKNA-pmIPCN9UQuGLO5V1_oL7xE?7bwCQ3NXzto??MDyzA5F
Scale = 1:67.2

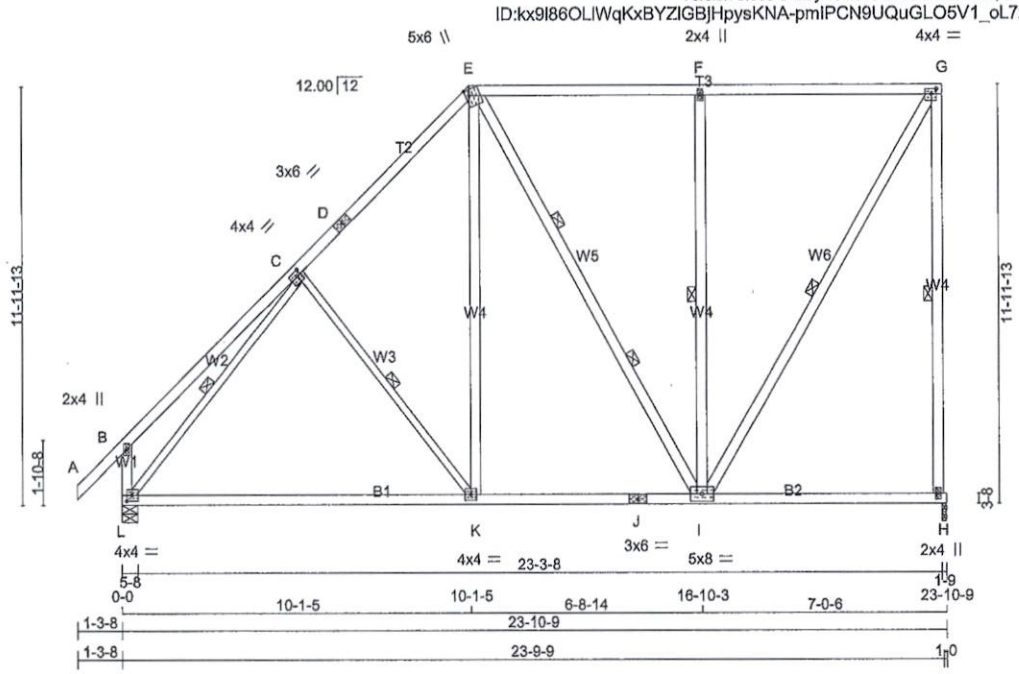

TOTAL WEIGHT = 14 X 145 = 2031 lb

[M][F]

LUMBER
N. L. G. A. RULES

CHORDS	SIZE		LUMBER	DESCR.
A - D	2x4	DRY	No.2	SPF
D - E	2x4	DRY	No.2	SPF
E - G	2x4	DRY	No.2	SPF
H - G	2x4	DRY	No.2	SPF
L - B	2x4	DRY	No.2	SPF
L - J	2x4	DRY	No.2	SPF
J - H	2x4	DRY	No.2	SPF
ALL WEBS EXCEPT	2x4	DRY	No.2	SPF
C - K	2x3	DRY	No.2	SPF
L - C	2x3	DRY	No.2	SPF

DRY: SEASONED LUMBER.

PLATES (table Is In Inches)

JT	TYPE	PLATES	W	LEN	Y	X
B	TMV+p	MT20	2.0	4.0		
C	TMWW-t	MT20	4.0	4.0	1.75	1.25
D	TS-t	MT20	3.0	6.0		
E	TTWW+m	MT20	5.0	6.0	2.00	1.25
F	TMW+w	MT20	2.0	4.0		
G	TMVW-t	MT20	4.0	4.0	1.75	1.75
H	BMV1+p	MT20	2.0	4.0		
I	BMWWW-t	MT20	5.0	8.0		
J	BS-t	MT20	3.0	6.0		
K	BMWW-t	MT20	4.0	4.0		
L	BMVW1-t	MT20	4.0	4.0	2.00	1.75

NOTES- (1)

NOTE: Lateral brace(s) shown shall be 2x4 SPF #2

LICENSED PROFESSIONAL ENGINEER
07/11/2019
R. TURENNE
100157040
PROVINCE OF ONTARIO

DIMENSIONS, SUPPORTS AND LOADINGS SPECIFIED BY FABRICATOR TO BE VERIFIED BY BUILDING DESIGNER

BEARINGS

JT	FACTORED GROSS REACTION VERT	HORZ	MAXIMUM FACTORED GROSS REACTION DOWN	HORZ	UPLIFT	INPUT BRG IN-SX	REQRD BRG IN-SX
H	1303	0	1303	0	0	1-9	1-8
L	1378	0	1378	0	0	5-8	1-8

UNFACTORED REACTIONS

JT	1ST LCASE COMBINED	MAX./MIN. COMPONENT REACTIONS SNOW	LIVE	PERM.LIVE	WIND	DEAD	SOIL
H	932	554 / 0	0 / 0	0 / 0	0 / 0	377 / 0	0 / 0
L	978	619 / 0	0 / 0	0 / 0	0 / 0	359 / 0	0 / 0

BEARING MATERIAL TO BE SPF NO.2 OR BETTER AT JOINT(S) H, L

BRACING
FOR SECTION E-G, MAX. PURLIN SPACING = 2.00 FT.
FOR OTHER SECTIONS, TOP CHORD TO BE SHEATHED OR MAX. PURLIN SPACING = 5.98 FT.
MAX. UNBRACED BOTTOM CHORD LENGTH = 10.00 FT OR RIGID CEILING DIRECTLY APPLIED.

ALL PITCH BREAKS AND PERIMETER CORNER JOINTS MUST BE LATERALLY RESTRAINED.

1 LATERAL BRACE(S) AT 1/ 2 LENGTH OF G-H, C-K, F-I, G-I, C-L.
2 LATERAL BRACE(S) AT 1/ 3 LENGTH OF E-I.

END VERTICAL(S) MUST BE SHEATHED OR HAVE BRACES AS INDICATED IN THE MAX. UNBRACED LENGTH COLUMN OF THE TABLE BELOW

LOADING
TOTAL LOAD CASES: (4)

CHORDS

MEMB. FR-TO	MAX. FACTORED FORCE (LBS)	FACTORED VERT. LOAD (PLF) FROM	TO	LC1 MAX CSI (LC)	MAX. UNBRAC LENGTH
A- B	0 / 42	-84.9	-84.9	0.12 (1)	10.00
B- C	0 / 37	-84.9	-84.9	0.36 (1)	10.00
C- D	-958 / 0	-84.9	-84.9	0.30 (1)	5.98
D- E	-958 / 0	-84.9	-84.9	0.30 (1)	5.98
E- F	-595 / 0	-92.4	-92.4	0.56 (1)	2.00
F- G	-596 / 0	-92.4	-92.4	0.57 (1)	2.00
H- G	-1247 / 0	0.0	0.0	0.98 (1)	5.76
L- B	-279 / 0	0.0	0.0	0.03 (1)	7.81
L- K	0 / 783	-18.5	-18.5	0.47 (4)	10.00
K- J	0 / 654	-18.5	-18.5	0.47 (4)	10.00
J- I	0 / 654	-18.5	-18.5	0.47 (4)	10.00
I- H	0 / 0	-18.5	-18.5	0.19 (4)	10.00

WEBS

MEMB. FR-TO	MAX. FACTORED FORCE (LBS)	MAX CSI (LC)
C- K	-213 / 0	0.10 (1)
K- E	0 / 355	0.06 (1)
E- I	-117 / 0	0.05 (1)
I- F	-785 / 0	0.62 (1)
I- G	0 / 1166	0.19 (1)
L- C	-1286 / 0	0.59 (1)

DESIGN CRITERIA

SPECIFIED LOADS:

TOP CH.	LL =	23.3	PSF
	DL =	6.0	PSF
BOT CH.	LL =	0.0	PSF
	DL =	7.4	PSF
TOTAL LOAD	=	36.7	PSF

SPACING = 24.0 IN. C/C

LOADING IN FLAT SECTION BASED ON PIGGYBACK TRUSS WITH SLOPES OF 6.00/12 AND -6.00/12 AND RESPECTIVE WALL HEIGHTS OF 0-0 AND 0-0 AND AN ADDITIONAL DEAD LOAD OF 3.0 P.S.F.

THIS TRUSS IS DESIGNED FOR RESIDENTIAL OR SMALL BUILDING REQUIREMENTS OF PART 9, NBCC 2010, NBCC 2015

THIS DESIGN COMPLIES WITH:
- PART 9 OF BCBC 2018 , OBC 2012
- CSA 086-09, CSA 086-14
- TPIC 2011, TPIC 2014

(55 % OF 27.2 P.S.F. G.S.L. PLUS 8.4 P.S.F. RAIN LOAD) EQUALS 23.3 P.S.F. SPECIFIED ROOF LIVE LOAD

ALLOWABLE DEFL.(LL)= L/360 (0.79")
CALCULATED VERT. DEFL.(LL) = L/ 999 (0.03")
ALLOWABLE DEFL.(TL)= L/360 (0.79")
CALCULATED VERT. DEFL.(TL) = L/ 889 (0.32")

CSI: TC=0.98/1.00 (G-H:1) , BC=0.47/1.00 (K-L:4) , WB=0.62/1.00 (F-I:1) , SSI=0.31/1.00 (F-G:1)

DOL LUMBER=1.00 NAIL=1.00 LS BEND=1.10 COMP=1.10 SHEAR=1.10 TENS= 1.10

COMPANION LIVE LOAD FACTOR = 1.00

TRUSS PLATE MANUFACTURER IS NOT RESPONSIBLE FOR QUALITY CONTROL IN THE TRUSS MANUFACTURING PLANT .

NAIL VALUES

PLATE	GRIP(DRY) (PSI) MAX	MIN	SHEAR (PLI) MAX	MIN	SECTION (PLI) MAX	MIN
MT20	618	354	1667	788	1987	1656

PLATE PLACEMENT TOL. = 0.250 Inches

PLATE ROTATION TOL. = 5.0 Deg.

JSI GRIP= 0.89 (L) (INPUT = 0.90)
JSI METAL= 0.49 (C) (INPUT = 1.00)

JOB NAME	TRUSS NAME	QUANTITY	PLY	JOB DESC.	DRWG NO.
310395	H7		1	TRUSS DESC. JT-39002	E-19072368

Alpa Roof Truss, Maple

Version 8.300 S May 10 2019 MiTek Industries, Inc. Thu Jul 11 11:22:23 2019 Page 1
ID:kx9I86OLIWqKxBYZIGBjHpysKNA-HyrnPj96BBOC0E4DYWsMUSYO1JdFoxz76SkYufyzA5E
Scale: 1/2"=1'

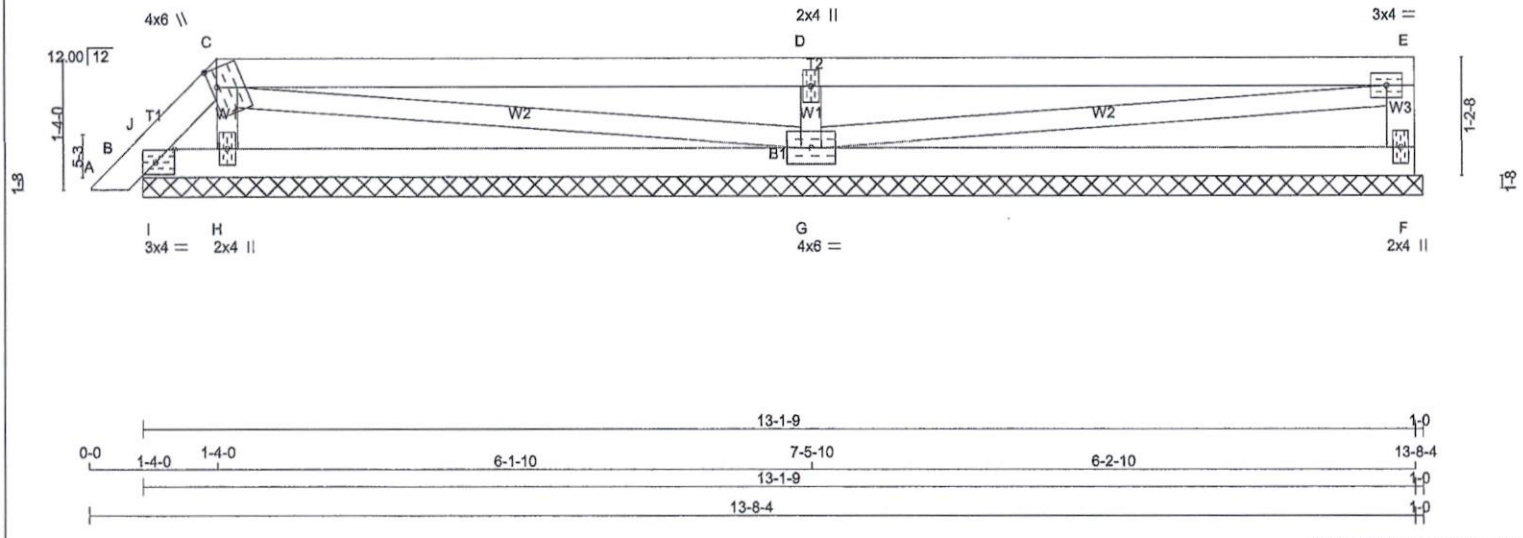

TOTAL WEIGHT = 4 X 42 = 170 lb

[M]

LUMBER
N. L. G. A. RULES

CHORDS	SIZE		LUMBER	DESCR.
A - C	2x4	DRY	No.2	SPF
C - E	2x4	DRY	No.2	SPF
F - E	2x4	DRY	No.2	SPF
B - F	2x4	DRY	No.2	SPF
ALL WEBS	2x3	DRY	No.2	SPF

DRY: SEASONED LUMBER.

PLATES (table is in inches)

JT	TYPE	PLATES	W	LEN	Y	X
B	TMB1-I	MT20	3.0	4.0	1.50	2.50
C	TTWW+m	MT20	4.0	6.0	2.25	0.75
D	TMW+w	MT20	2.0	4.0		
E	TMVW-t	MT20	3.0	4.0		
F	BMV1+p	MT20	2.0	4.0		
G	BMWWW1-t	MT20	4.0	6.0		
H	BMW1+w	MT20	2.0	4.0		

NOTES- (1)

NOTE: Lateral brace(s) shown shall be 2x4 SPF #2

LICENSED PROFESSIONAL ENGINEER
07/11/2019
R. TURENNE
100157040
PROVINCE OF ONTARIO

DIMENSIONS, SUPPORTS AND LOADINGS SPECIFIED BY FABRICATOR TO BE VERIFIED BY BUILDING DESIGNER

BEARINGS

JT	FACTORED GROSS REACTION VERT	HORZ	MAXIMUM FACTORED GROSS REACTION DOWN	HORZ	UPLIFT	INPUT BRG IN-SX	REQRD BRG IN-SX
F	244	0	244	0	0	13-2-9 (13-1-9)	10-12
B	68	0	68	0	-23	13-2-9 (13-1-9)	10-12
H	295	0	295	0	0	13-2-9 (13-1-9)	10-12
G	788	0	788	0	0	13-2-9 (13-1-9)	10-12

VALUE IN PARENTHESIS INDICATES EFFECTIVE BEARING LENGTH

PROVIDE ANCHORAGE AT BEARING JOINT B FOR 150 LBS FACTORED UPLIFT

UNFACTORED REACTIONS

JT	1ST LCASE COMBINED	MAX./MIN. COMPONENT REACTIONS SNOW	LIVE	PERM.LIVE	WIND	DEAD	SOIL
F	173	109 / 0	0 / 0	0 / 0	0 / 0	64 / 0	0 / 0
B	43	59 / 0	0 / 0	0 / 0	0 / 0	0 / -17	0 / 0
H	215	103 / 0	0 / 0	0 / 0	0 / 0	112 / 0	0 / 0
G	558	360 / 0	0 / 0	0 / 0	0 / 0	198 / 0	0 / 0

BEARING MATERIAL TO BE SPF NO.2 OR BETTER AT JOINT(S) F, B, H, G

BRACING
TOP CHORD TO BE SHEATHED OR MAX. PURLIN SPACING = 6.25 FT.
MAX. UNBRACED BOTTOM CHORD LENGTH = 10.00 FT OR RIGID CEILING DIRECTLY APPLIED.

ALL PITCH BREAKS AND PERIMETER CORNER JOINTS MUST BE LATERALLY RESTRAINED.

LOADING
TOTAL LOAD CASES: (4)

CHORDS

MEMB. FR-TO	MAX. FACTORED FORCE (LBS)	FACTORED VERT. LOAD LC1 (PLF) FROM	TO	MAX CSI (LC)	MAX. UNBRAC LENGTH
A- B	0 / 12	-84.9	-84.9	0.01 (1)	10.00
B- J	-6 / 33	-84.9	-84.9	0.03 (4)	10.00
J- C	-56 / 0	-84.9	-84.9	0.02 (4)	6.25
C- D	0 / 0	-84.9	-84.9	0.55 (1)	10.00
D- E	-1 / 0	-84.9	-84.9	0.55 (1)	10.00
F- E	-199 / 0	0.0	0.0	0.02 (1)	7.81
B- I	0 / 29	-18.5	-18.5	0.01 (1)	10.00
I- H	0 / 29	-18.5	-18.5	0.10 (4)	10.00
H- G	0 / 10	-18.5	-18.5	0.18 (4)	10.00
G- F	0 / 0	-18.5	-18.5	0.18 (4)	10.00

WEBS

MEMB. FR-TO	MAX. FACTORED FORCE (LBS)	MAX CSI (LC)
H- C	-169 / 0	0.02 (1)
C- G	-9 / 0	0.01 (1)
G- D	-655 / 0	0.09 (1)
G- E	0 / 1	0.00 (1)
I- J	-97 / 0	0.00 (1)

DESIGN CRITERIA

SPECIFIED LOADS:

TOP CH.	LL	=	23.3	PSF
	DL	=	6.0	PSF
BOT CH.	LL	=	0.0	PSF
	DL	=	7.4	PSF
TOTAL LOAD		=	36.7	PSF

SPACING = 24.0 IN. C/C

LOADING IN FLAT SECTION BASED ON A SLOPE OF 2.00/12 MINIMUM

THIS TRUSS IS DESIGNED FOR RESIDENTIAL OR SMALL BUILDING REQUIREMENTS OF PART 9, NBCC 2010, NBCC 2015

THIS DESIGN COMPLIES WITH:
- PART 9 OF BCBC 2018 , OBC 2012
- CSA 086-09, CSA 086-14
- TPIC 2011, TPIC 2014

(55 % OF 27.2 P.S.F. G.S.L. PLUS 8.4 P.S.F. RAIN LOAD) EQUALS 23.3 P.S.F. SPECIFIED ROOF LIVE LOAD

CSI: TC=0.55/1.00 (D-E:1) , BC=0.18/1.00 (G-H:4) , WB=0.09/1.00 (D-G:1) , SSI=0.26/1.00 (D-E:1)

DOL LUMBER=1.00 NAIL=1.00 LS BEND=1.10 COMP=1.10 SHEAR=1.10 TENS= 1.10

COMPANION LIVE LOAD FACTOR = 1.00

TRUSS PLATE MANUFACTURER IS NOT RESPONSIBLE FOR QUALITY CONTROL IN THE TRUSS MANUFACTURING PLANT .

NAIL VALUES

PLATE	GRIP(DRY) (PSI) MAX	MIN	SHEAR (PLI) MAX	MIN	SECTION (PLI) MAX	MIN
MT20	618	354	1667	788	1987	1656

PLATE PLACEMENT TOL. = 0.250 Inches

PLATE ROTATION TOL. = 5.0 Deg.

JSI GRIP= 0.34 (D) (INPUT = 0.90)
JSI METAL= 0.14 (D) (INPUT = 1.00)

May 27, 2019

Re: Expiration Date for Technical Bulletins Extended to 12/31/2019

Please be advised that the expiration date of the Technical Bulletins listed below has been extended until December 31, 2019.

T-SPECCP17	T-SPECH17	T-SPECDSHGUS17R
T-SPECHGUS17-R	T-SPECHHUS17-R	T-SPECHUS17
T-SPECLF17	T-SPECLT17	T-SPECLU17
T-SPECCLUL17	T-SPECLUS17	T-SPECSUR17
T-SPECTBE17	T-SPECTC17	T-SPECTHGB17
T-SPECTHGBHV17	T-SPECTHGQ17	T-SPECTHGW17
T-SPECLSULSSU17	T-SPECHTHGQ17	T-SPECSTHGQ17

Should you have any questions or concerns regarding the above, please contact me at your convenience.

Sincerely,

Brent Bunting, P.Eng.
Simpson Strong-Tie Canada, Ltd.

LICENSED PROFESSIONAL ENGINEER
5/28/2019
B. D. BUNTING
PROVINCE OF ONTARIO

LUS – Double Shear Joist Hangers

SIMPSON Strong-Tie®

All LUS hangers have double shear nailing. This patented innovation distributes the load through two points on each joist nail for greater strength. It also allows the use of fewer nails, faster installation and the use of common nails for all connections.

Material: 18 gauge

Finish: G90 galvanized

Design:

- Factored resistances are in accordance with CSA O86-14.
- Uplift resistances have been increased 15%. No further increase is permitted.
- Wood shear is not considered in the factored resistances given. The specifier must ensure that the joist and header capacities are capable of withstanding these loads.

Installation:

- Use all specified fasteners.
- Nails: 16d = 0.162" dia. x 3½" long common wire, 10d = 0.148" x 3" long common wire.
- Double shear nails must be driven at an angle through the joist or truss into the header to achieve the table loads.
- Not designed for welded or nailer applications.

Options:

- These hangers cannot be modified

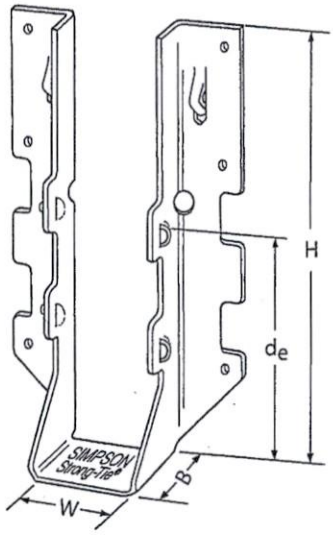

LUS28

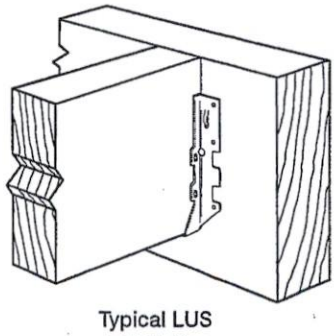

Typical LUS Installation

Model No.	Ga.	Dimensions (in.)				Fasteners		Factored Resistance (lb.)			
								D.Fir-L		S-P-F	
		W	H	B	d_e[1]	Face	Joist	Uplift (K_D=1.15)	Normal (K_D=1.00)	Uplift (K_D=1.15)	Normal (K_D=1.00)
LUS24	18	1 9/16	3 1/8	1 3/4	1 15/16	(4) 10d	(2) 10d	710	1630	645	1155
LUS24-2	18	3 1/8	3 1/8	2	1 13/16	(4) 16d	(2) 16d	835	2020	590	1435
LUS26	18	1 9/16	4 3/4	1 3/4	3 5/8	(4) 10d	(4) 10d	1420	2170	1290	1630
LUS26-2	18	3 1/8	4 7/8	2	4	(4) 16d	(4) 16d	1720	2595	1545	1920
LUS26-3	18	4 5/8	4 3/16	2	3 1/4	(4) 16d	(4) 16d	1720	2595	1545	2340
LUS28	18	1 9/16	6 5/8	1 3/4	3 3/4	(6) 10d	(6) 10d	1420	2520	1290	1790
LUS28-2	18	3 1/8	7	2	4	(6) 16d	(4) 16d	1720	3325	1545	2575
LUS28-3	18	4 5/8	6 1/4	2	3 1/4	(6) 16d	(4) 16d	1720	3325	1545	2375
LUS210	18	1 9/16	7 13/16	1 3/4	3 7/8	(8) 10d	(4) 10d	1420	2785	1290	2210
LUS210-2	18	3 1/8	9	2	6	(8) 16d	(6) 16d	2580	4500	2320	3195
LUS210-3	18	4 5/8	8 3/16	2	5 1/4	(8) 16d	(6) 16d	2580	3345	2320	2375

1. d_e is the distance from the seat of the hanger to the highest joist nail.

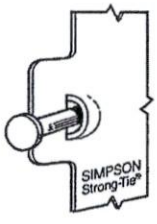

Dome Double Shear Nailing prevents tabs breaking off (available on some models).

U.S. Patent 5,603,580

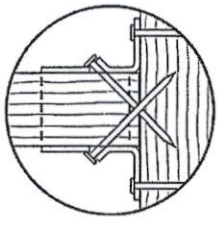

Double Shear Nailing Top View.

LIMIT STATES DESIGN

This technical bulletin is effective until June 30, 2019, and reflects information available as of March 1, 2017. This information is updated periodically and should not be relied upon after June 30, 2019. Contact Simpson Strong-Tie for current information and limited warranty or see strongtie.com.

© 2017 Simpson Strong-Tie Company Inc.

(800) 999-5099
strongtie.com

HHUS – Double Shear Joist Hangers

SIMPSON Strong-Tie®

All HHUS hangers have double shear nailing. This patented innovation distributes the load through two points on each joist nail for greater strength. It also allows the use of fewer nails, faster installation and the use of common nails for all connections. Do not bend or remove tabs.

Material: 14 gauge

Finish: G90 galvanized

Design:

- Factored resistances are in accordance with CSA O86-14.
- Uplift resistances have been increased 15%. No further increase is permitted.
- Wood shear is not considered in the factored resistances given. The specifier must ensure that the joist and header capacities are capable of withstanding these loads.

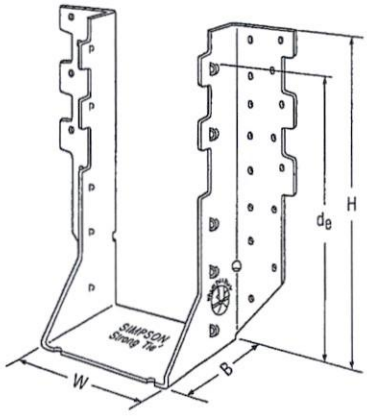

HHUS410

Installation:

- Use all specified fasteners
- Nails: 16d = 0.162" dia. x 3½" long common wire
- Double shear nails must be driven at an angle through the joist or truss into the header to achieve the table loads
- Not designed for welded or nailer applications

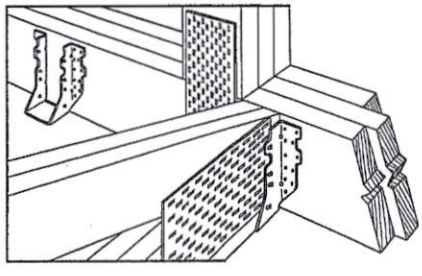

Typical HHUS Installation (Truss Designer to provide fastener quantity for connecting multiple members together)

Options:

- See current catalogue for options

Model No.	Ga.	Dimensions (in.)				Fasteners		Factored Resistance (lb.)			
								D.Fir-L		S-P-F	
		W	H	B	d_e[1]	Face	Joist	Uplift (K_D=1.15)	Normal (K_D=1.00)	Uplift (K_D=1.15)	Normal (K_D=1.00)
HHUS26-2	14	3 5/16	5 13/16	3	3 15/16	(14) 16d	(6) 16d	2850	7335	2065	5205
HHUS28-2	14	3 5/16	7 7/32	3	6 5/32	(22) 16d	(8) 16d	3765	8940	2675	6345
HHUS210-2	14	3 5/16	9 3/32	3	8	(30) 16d	(10) 16d	4745	9660	4310	7000
HHUS210-3	14	4 11/16	9	3	7 15/16	(30) 16d	(10) 16d	4745	10545	4310	7485
HHUS210-4	14	6 1/8	8 29/32	3	7 27/32	(30) 16d	(10) 16d	4745	10545	4310	7485
HHUS46	14	3 5/8	5 13/32	3	3 15/16	(14) 16d	(6) 16d	2540	7335	2065	5205
HHUS48	14	3 5/8	7 1/8	3	6 1/8	(22) 16d	(8) 16d	3765	8945	2267	6345
HHUS410	14	3 5/8	9	3	8	(30) 16d	(10) 16d	4745	9855	4310	7000
HHUS5.50/10	14	5 1/2	9	3	8	(30) 16d	(10) 16d	4745	10545	4310	7485
HHUS7.25/10	14	7 1/4	9	3 5/16	7 29/32	(30) 16d	(10) 16d	4745	10770	4310	7650

1. d_e is the distance from the seat of the hanger to the highest joist nail.

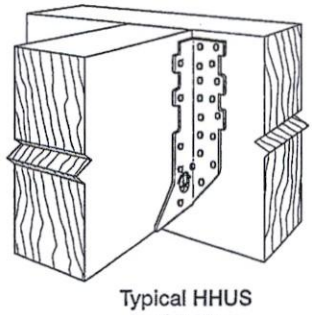

Typical HHUS Installation

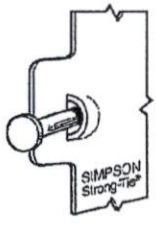

Dome Double Shear Nailing prevents tabs breaking off (available on some models).

U.S. Patent 5,603,580

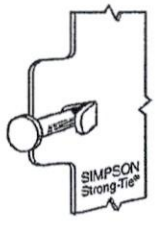

Double Shear Nailing Side View. Do not bend tab back.

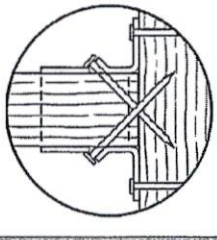

Double Shear Nailing Top View.

LIMIT STATES DESIGN

This technical bulletin is effective until June 30, 2019, and reflects information available as of March 1, 2017. This information is updated periodically and should not be relied upon after June 30, 2019. Contact Simpson Strong-Tie for current information and limited warranty or see strongtie.com.

© 2017 Simpson Strong-Tie Company Inc.

(800) 999-5099
strongtie.com

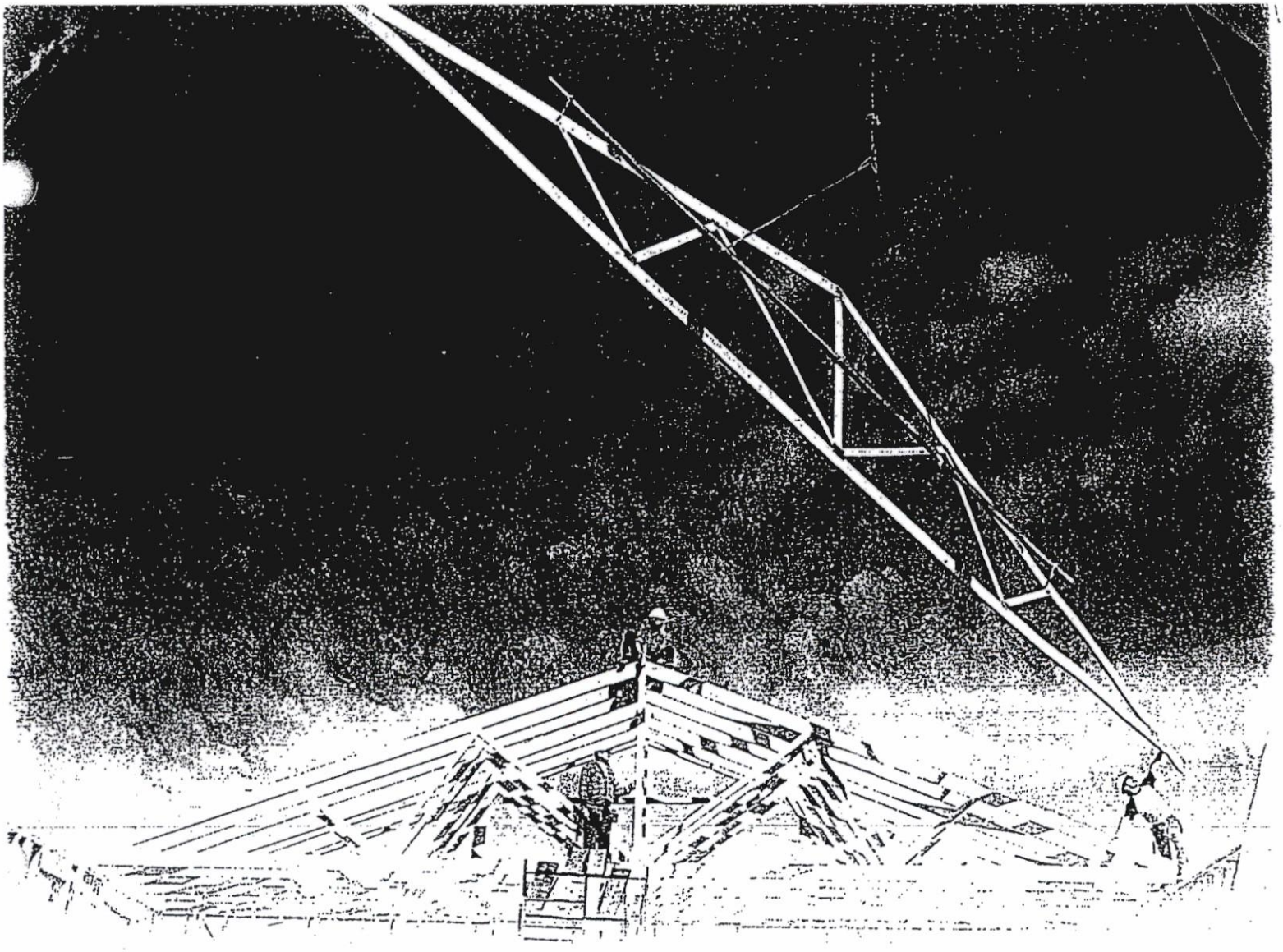

Wood Truss Installation

A Guide to proper handling, erecting and bracing metal plate connected wood trusses

Table of Content

Warning.....4

1 Unloading & Lifting.....5

2 Job Site Handling.....5

3 Hoisting.....6

4 Beginning the Erection Process.....7

5 Erection Tolerance.....8

6 Bracing.....8

7 Bracing Requirements for 3 Planes of Roof.....9

8 Stacking Materials.....10

Caution Notes.....11

Warning

General

Familiarity with the **Construction Design Documents**, the **Truss Design Drawings**, and **Truss Placement Plans** (if required by the **Construction Design Documents**) is required to properly erect, brace, and connect the trusses to the building system.

All of the care and quality involved in the design and manufacture of wood trusses can be jeopardized if the trusses are not properly handled, erected, and braced.

The consequences of improper handling, erecting, and bracing may be a collapse of the structure, which at best is a substantial loss of time and materials, and at worst is a loss of life. The majority of truss accidents occur during truss installation and not as a result of improper design or manufacture.

Prior to truss erection, the builder/erector shall meet with the erection crew for a safety and planning meeting, making sure each crew member understands his or her roles and responsibilities during the erection process.

Temporary Erection Bracing

Trusses are not marked in any way to identify the frequency, or location of temporary erection bracing.

All temporary bracing shall comply with the latest edition of *Commentary and Recommendations for Handling, Installing & Bracing Metal Plate Connected Wood Trusses* (HIB), published by the Truss Plate Institute, and/or as specified in the **Construction Design Documents** prepared by the building designer.

Permanent Truss Bracing

Permanent bracing for the roof or floor trusses is the responsibility of the building designer and should be shown on the **Construction Design Documents**. Permanent bracing locations for individual compression members of a wood truss are shown on the **Truss Design Drawings**, and shall be installed by the building or erection contractor. This bracing is needed for the proper performance of individual trusses within the roof or floor system. The design and connection of the bracing to the truss and then to the overall building system is the responsibility of the building designer, and is in addition to the permanent bracing plan, which is also specified by the building designer.

Special Design Requirements

Special design requirements, such as wind bracing, portal bracing, seismic bracing, diaphragms, shear walls, or other load transfer elements and their connections to wood trusses must be considered separately by the building designer, who shall determine size, location, and method of connections for all bracing as needed to resist these forces.

1 Unloading & Lifting

Never handle trusses flat

Beginning with the unloading process, and throughout all phases of construction, care must be taken to avoid **lateral bending** of trusses, which can cause damage to the lumber and metal connector plates at the joints.

Avoid lateral bending

- **Use special care in windy weather.**
- **If using a crane within 10 feet of an electric line, contact the local power company.**
- **If using a crane within 5 miles of an airport, contact the airport 30 days prior to erection to learn about any safety regulations that must be followed.**

2 Job Site Handling

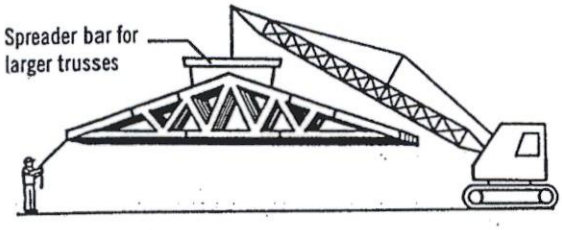

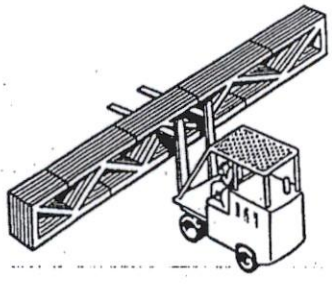

All trusses should be picked up at the top chords in a vertical position only

Proper banding and smooth ground allow for unloading of trusses without damage. This should be done as close to the building site as possible to minimize handling. **Do not** break banding until installation begins. Hand erection of trusses is allowed, provided excessive lateral bending is prevented.

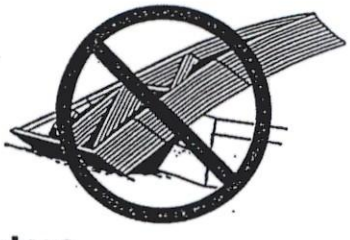

Do not store unbraced bundles upright

If trusses are stored vertically they shall be braced in a manner that will prevent tipping or topping. Generally cuting of the banding is done just prior to installation.

Do not store on uneven ground

If trusses are stored horizontally, blocking should be used on eight to ten foot centers, or as required, to minimize lateral bending and moisture gain.

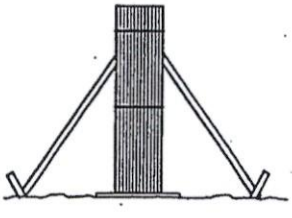

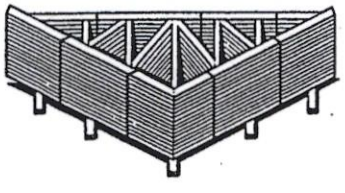

Care should be exercised when removing banding to avoid damaging trusses.

During long term storage, trusses shall be protected from the environment in a manner that provides for adequate ventilation of the trusses. If tarpaulins or other material is used, the ends shall be left open for ventilation. Plastic is not recommended, since it can trap moisture.

3 Hoisting

All trusses that are erected one at a time shall be held safely in position by the erection equipment until such time as all necessary bracing has been installed and the ends of the trusses are securely fastened to the building.

Avoid lateral bending

L ≤ 30'

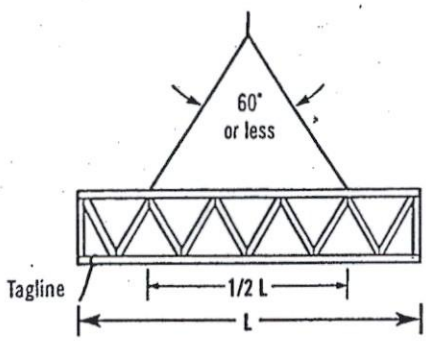

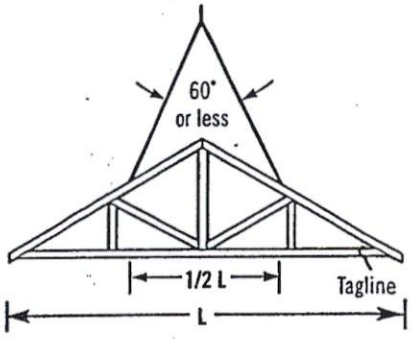

Truss sling is acceptable where these criteria are met.

30' < L ≤ 60'

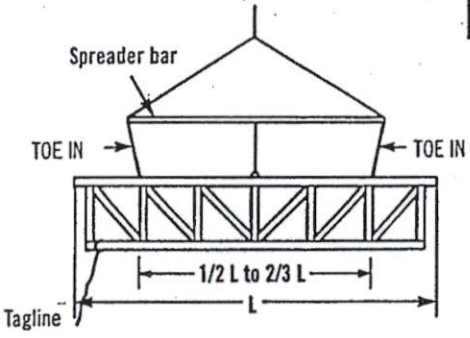

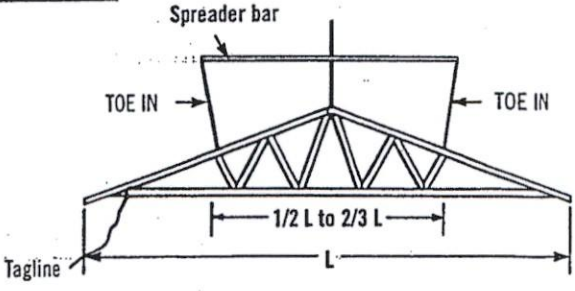

Use spreader bar in all other cases. It should be noted that the lines from the ends of the spreader bar **"TOE IN"**; if these lines should **"TOE OUT"** the truss may fold in half.

L > 60'

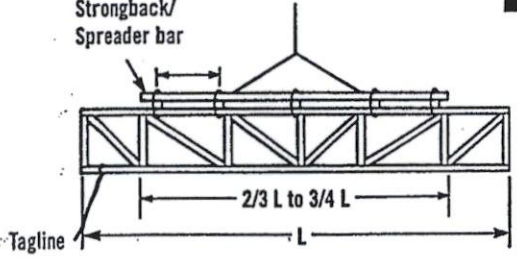

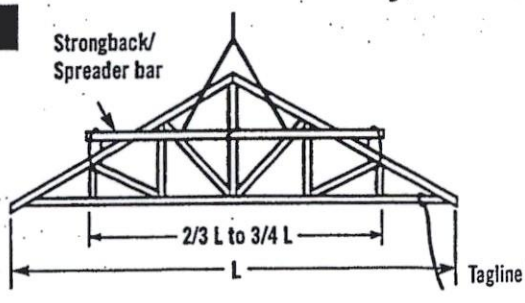

For lifting trusses with spans in excess of 60 feet, it is recommended that a strongback/spreader bar be used as illustrated. The strongback/spreader bar should be attached to the top chord and web members at intervals of approximately 10 feet. Further, the strongback/spreader bar should be at or above the mid-height of the truss to prevent overturning. The strongback/spreader bar can be of any material with sufficient strength to safely carry the weight of the truss and sufficient rigidity to adequately resist bending of the truss.

4 Beginning the Erection Process

It is important for the builder or erection contractor to provide substantial bracing for the first truss erected. The two or more trusses making up the rest of the first set are tied to and rely upon the first truss for stability. Likewise, after this first set of trusses is adequately cross-braced, the remaining trusses installed rely upon this first set for stability. Thus, the performance of the truss bracing system depends to a great extent on how well the first group of trusses is braced.

Ground Brace – Exterior

One satisfactory method ties the first unit of trusses off to a series of braces that are attached to a stake driven into the ground and securely anchored. The ground brace itself should be supported as shown below or it is apt to buckle. Additional ground braces in the opposite direction, inside the building, are also recommended.

Ground Brace – Interior

Another satisfactory method where height of building or ground conditions prohibit bracing from the exterior is to tie the first truss rigidly in place from the interior at the floor level, provided the floor is substantially completed and capable of supporting the ground bracing forces. Securely fasten the first truss to the middle of the building. Brace the bracing similar to exterior ground bracing shown at left. Set trusses from the middle toward the end of the building. Properly cross-brace the first set of trusses before removing floor braces and setting remaining trusses.

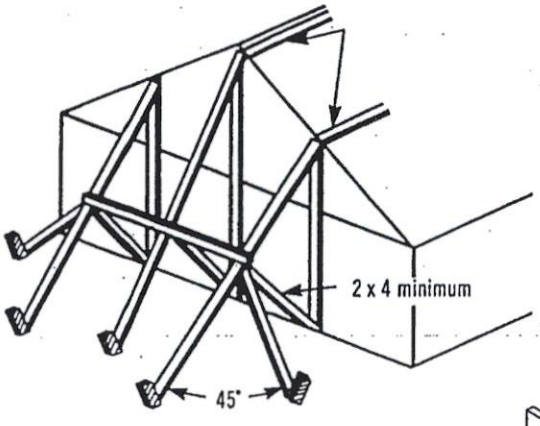

Note: Locate ground braces for first truss directly in line with all rows of top chord continuous lateral bracing (either temporary or permanent).

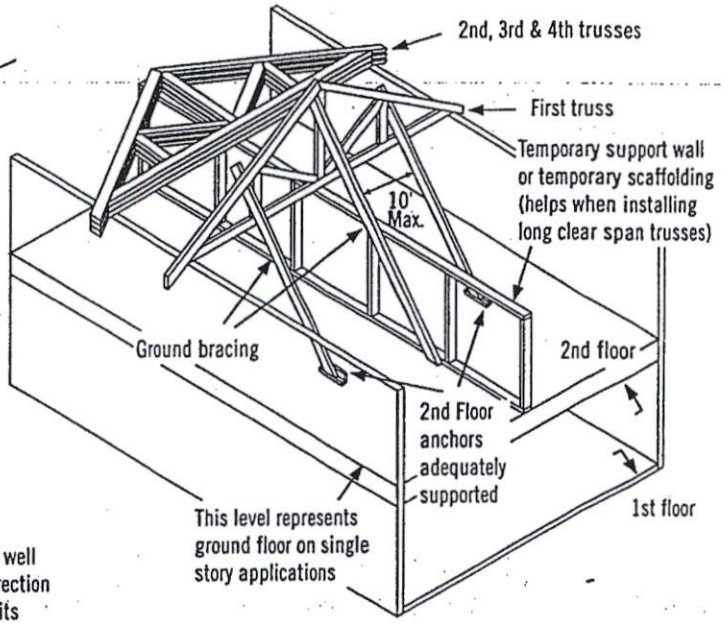

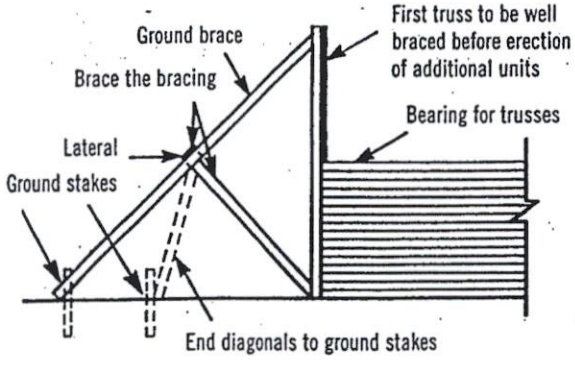

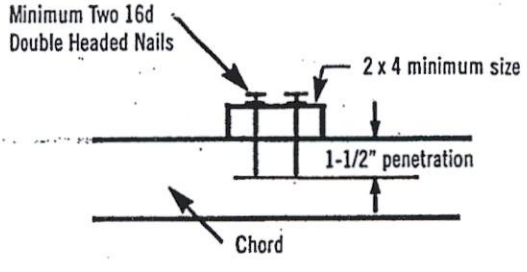

Inadequate size of bracing material or inadequate fastening is a major cause of erection dominoing.

5 Erection Tolerance

Complying with erection tolerances is critical to achieving an acceptable roof or floor line, and to accomplishing effective bracing. Setting trusses within tolerance the first time will prevent the need for the hazardous practice of respacing or adjusting trusses when roof sheathing or roof purlins are installed. Trusses leaning or bowing can cause nails to miss the top chords when sheathing is applied, and create cumulative stresses on the bracing, which is a frequent cause of dominoing.

When sheathing, make sure nails are driven into the top chord of the trusses.

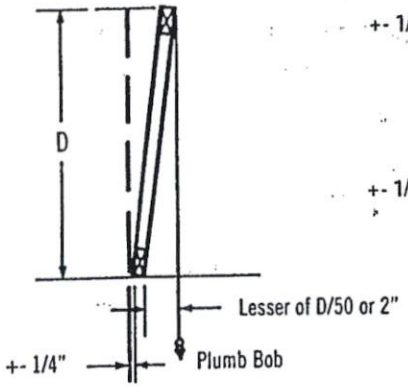

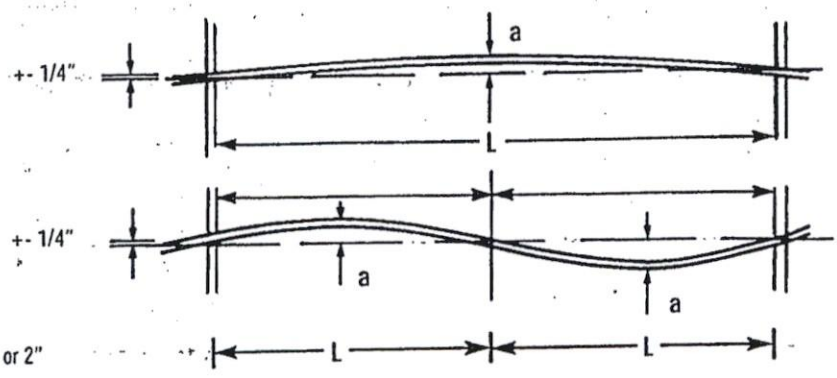

L = 16' to 32', a = 1"
L = 32' & over, a = 2"

6 Bracing

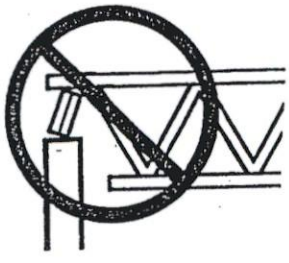

Do not install trusses on temporarily connected supports

Do not walk on unbraced trusses

Do not walk on trusses or gable ends lying flat

Nails in withdrawal (parallel to force)

All anchors, hangers, tie-downs, seats, bearing ledgers, etc., that are part of the supporting structure shall be accurately and properly placed and permanently attached before truss installation begins. No trusses shall ever be installed on anchors or ties that have temporary connections to the supporting structure.

Nailing scabs to the end of the building to brace the first truss is not recommended.

All nailing of bracing should be done so that nails are driven perpendicular to the direction of force, as shown at right.

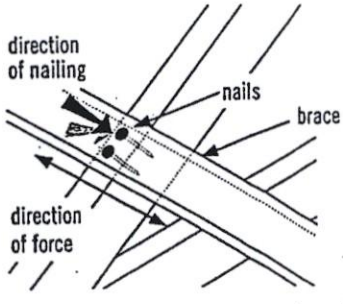

Well nailed (perpendicular to force)

7 Bracing Requirements for 3 Planes of Roof

Temporary erection bracing must be applied to three planes of the roof system to ensure stability: Plane 1) **Top Chord** (sheathing), Plane 2) **Bottom Chord** (ceiling plane), and Plane 3) **Web Member** plane or vertical plane perpendicular to trusses.

1) Top Chord Plane

Most important to the builder or erection contractor is bracing in the plane of the top chord. Truss top chords are susceptible to lateral buckling before they are braced or sheathed.

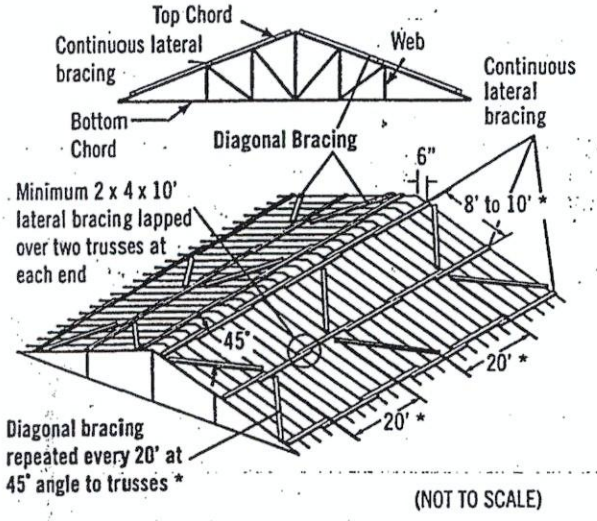

(NOT TO SCALE)

Exact spacing between trusses should be maintained as bracing is installed to avoid the hazardous practice of removing bracing to adjust spacing. This act of "adjusting spacing" can cause trusses to topple if connections are removed at the wrong time.

2) Bottom Chord Plane

In order to hold proper spacing on the bottom chord, temporary bracing is recommended on the top of the bottom chord.

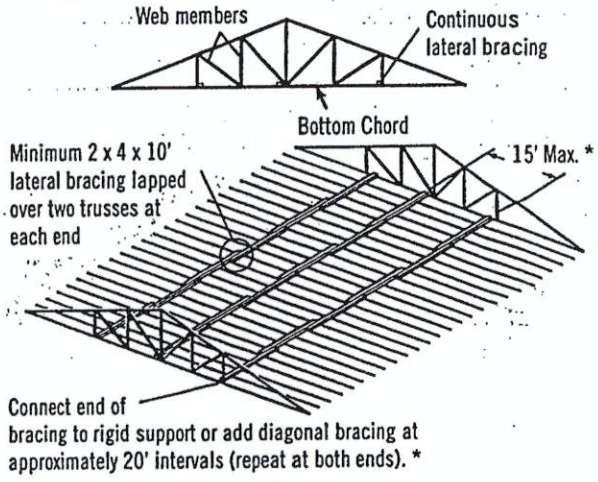

* Long spans, heavy loads or other spacing configurations may require closer spacing between lateral bracing and closer intervals between diagonals. Consult the building designer or HIB and DSB (*Recommended Design Specification for Temporary Bracing of Metal-Plate Connected Wood Trusses*) for details.

Diagonal or cross-bracing is very important!

3) Web Member Plane

"X" bracing, as shown, is critical in preventing trusses from leaning or dominoing. Repeat as shown to create a succession of rigid units.

X-bracing should be installed on vertical web members wherever possible, at or near lateral bracing. Plywood or OSB may be substituted for X-bracing.

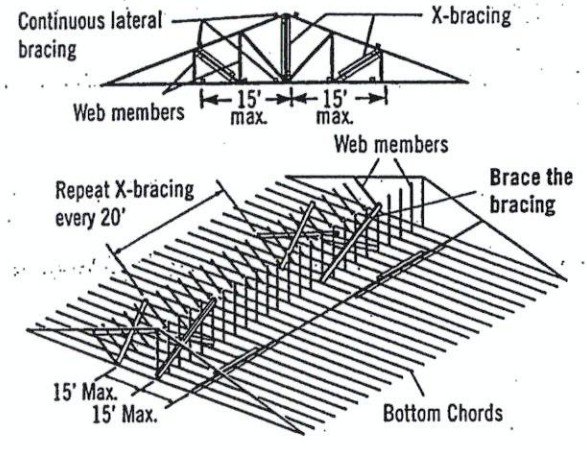

Note: Top chords and some web members are not shown, in order to make drawings more readable.

Do not use short blocks to brace individual trusses without a specific bracing plan detailing their use

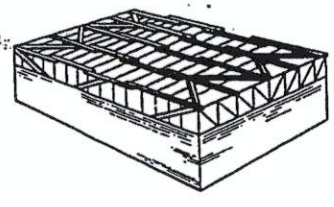

Bracing requirements using the same principles apply to parallel chord trusses

8 Stacking Materials

Do not proceed with building completion until all bracing is securely and properly in place

Never stack materials on unbraced or inadequately braced trusses

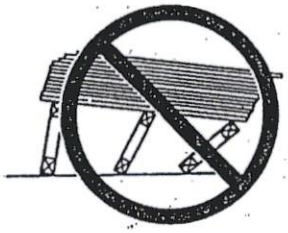

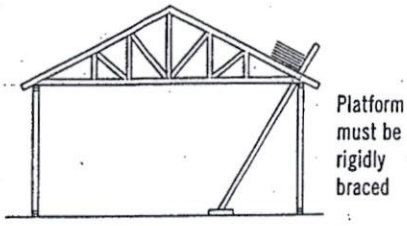

Proper distribution of construction materials is a must during construction.

Never stack materials near a peak

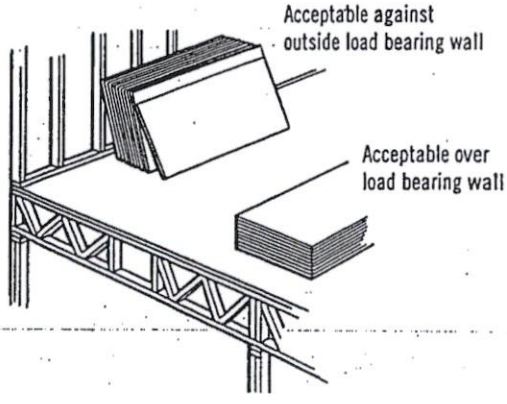

Never stack materials on the cantilever of a truss

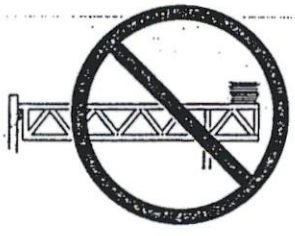

Always stack materials over two or more trusses.

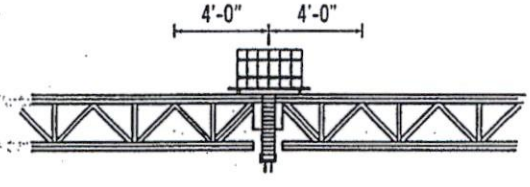

Roofing and mechanical contractors are cautioned to stack materials only along outside supporting members or directly over inside supporting members. Trusses are not designed for dynamic loads (i.e., moving vehicles). Extreme care should be taken when loading and stacking construction materials (rolled roofing, mechanical equipment, etc.) on the roof or floor system.

Never overload small groups or single trusses. Position load over as many trusses as possible.

Never cut any structural member of a truss.

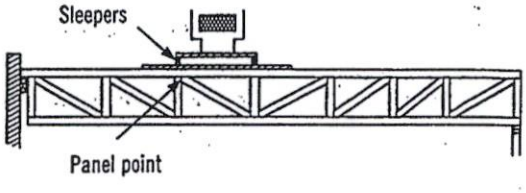

Sleepers for mechanical equipment should be located at panel points (joints) or over main supporting members, and only on trusses that have been designed for such loads.

Caution Notes

Errors in building lines and/or dimensions, or errors by others shall be corrected by the contractor or responsible construction trade subcontractor or supplier **before** erection of trusses begins.

Cutting of nonstructural overhangs is considered a part of normal erection and shall be done by the builder or erection contractor.

Any field modification that involves the cutting, drilling, or relocation of any structural truss member or connector plate shall not be done without the approval of the truss manufacturer or a licensed design professional.

The methods and procedures outlined are intended to ensure that the overall construction techniques employed will put floor and roof trusses **safely** in place in a completed structure. These recommendations for bracing wood trusses originate from the collective experience of leading technical personnel in the wood truss industry, but must, due to the nature of responsibilities involved, be presented only as a **guide** for use by a qualified building designer, builder, or erection contractor. Thus, the Wood Truss Council of America expressly disclaims any responsibility for damages arising from the use, application, or reliance on the recommendations and information contained herein.

[Selected text and figures referenced or reproduced from HIB and DSB by permission of the Truss Plate Institute, Madison, WI.]

THE CANADIAN WOOD TRUSS ASSOCIATION

L'ASSOCIATION CANADIENNE DES FABRICANTS DE FERMES DE BOIS

1400 Blair Place, Suite 210, Ottawa, ON K1J 9B8
Tel.: 613-747-5544 Fax: 613-747-6264

Wood Truss Council of America

One WTCA Center
6300 Enterprise Lane, Madison, WI 53719-1140
Tel.: 608-274-4849 Fax: 608-274-3329
wtca@woodtruss.com www.woodtruss.com

FIRM BCIN 113884
DESIGNER BCIN 25593

E19112509
E19072227 - E19072230
E19072240
E19072367 - E19072368
E19112570 - E19112585

ALPA-BARRIE

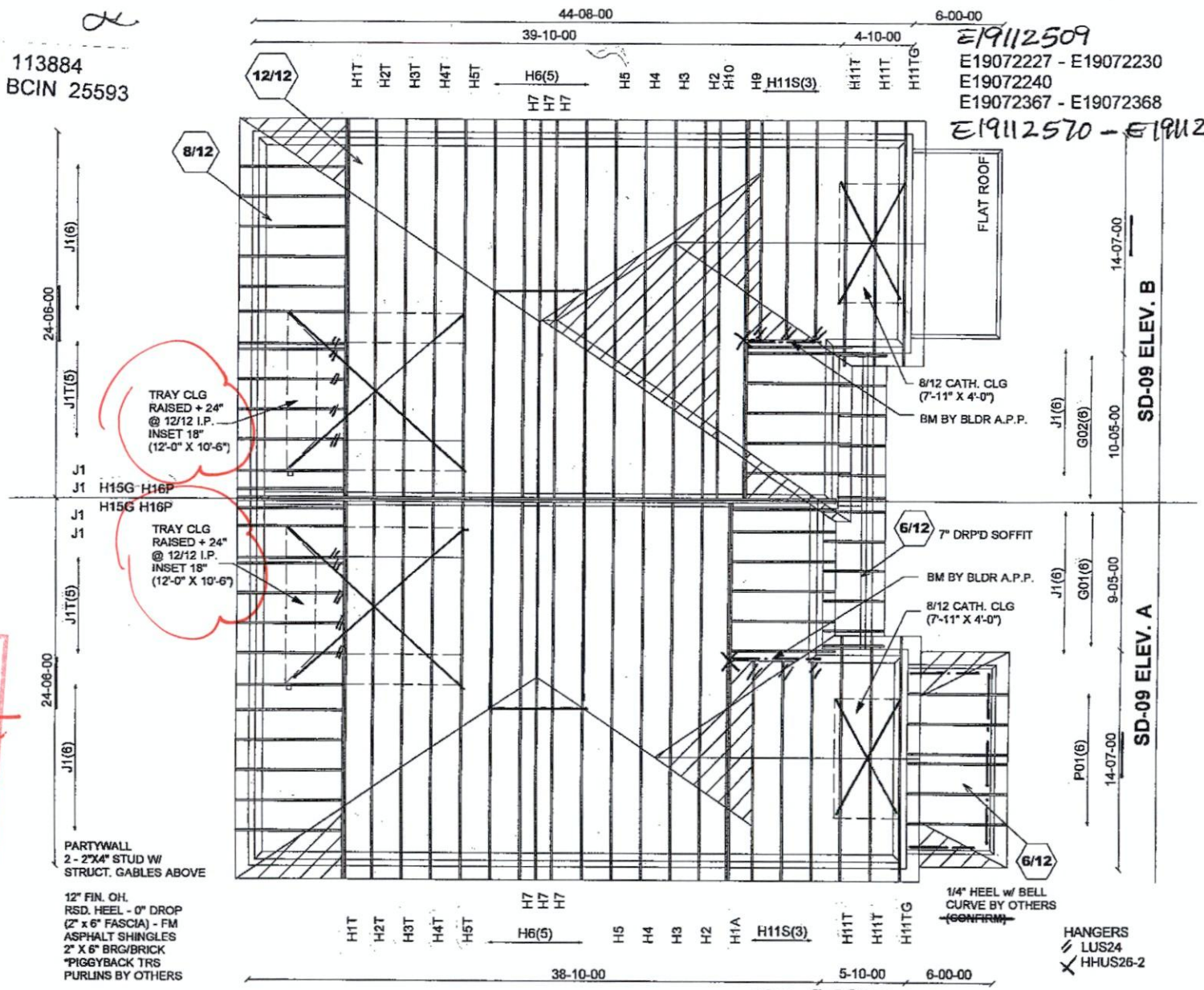

THE GERSHWIN

All work shall conform to the Ontario Building Code O. Reg. 332/12 as amended

For conventional framing roof / ceiling framing shall conform to OBC 9.23

CITY OF BRAMPTON
BUILDING DIVISION
REVIEWED
DEC 10 2019
BY
MARY FRENETTE

ALL CONVENTIONAL FRAMING TO CONFORM WITH PART 9 O.B.C. LATEST EDITION. ROOF RAFTERS THAT CROSS OVER TRUSSES TO BE 2X4 SPF #2 @ 24" O.C WITH A VERT. POST TO THE TRUSS UNDERNEATH AT EACH CROSS POINT. VERT. POSTS LONGER THAN 6' TO HAVE LATERAL BRACING SO THAT THE DISTANCE BETWEEN END POINTS & BETWEEN ROWS OF BRACING DOES NOT EXCEED 6'

CONVENTIONAL FRAMING BY OTHERS

Mitek V. 8.2.0

Job Track: 39002	Builder / Location: GOLD PARK HOMES / BRAMPTON	Model / Elevation: SD-09 REV1 / A/B OPT TRAY	
Layout ID: 314237	Project: MCLAUGHLIN AND MAYFIELD/ENCORE 2	THESE DRAWINGS CONSTITUTE THE PROPERTY OF ALPA ROOF TRUSSES INC., SHALL NOT BE REPRODUCED, PUBLISHED, OR REDISTRIBUTED IN ANY MANNER OR UTILIZED FOR ANY PURPOSE OTHER THAN THE MANUFACTURE OF TRUSSES BY ALPA ROOF TRUSSES INC AND WILL BE RETRACTED BY ALPA ROOF TRUSSES INC IF UTLILZED FOR ANY OTHER PURPOSE.	
Plan Log: 104619	Date: 2019-10-31 Designer: AMANDA		

EWP DESIGN INC.

(905) 832-2250 FAX (905) 832-0286

RESPONSIBILITIES AND SPECIFICATIONS

RESPONSIBILITIES

1. EWP DESIGN INC. is responsible for the design of trusses as individual components.
2. It is the responsibility of others to ascertain that the design loads utilized on each drawing meet or exceed the actual dead load imposed by the structure, the live load imposed by the intended use and the snow load imposed by local building code or authorities with jurisdictions.
3. All dimensions are to be verified by the owner, contractor, architect or other authorities with jurisdictions before truss fabrication.
4. EWP DESIGN INC. bears no responsibility for the erection of trusses. Persons erecting trusses are cautioned to seek professional advice regarding the temporary and permanent bracing for the system. Bracing shown on EWP DESIGN INC. drawing is specified for the truss as a component only and forms an integral part of the truss design.
5. It is the truss manufacturer's responsibility to ensure that trusses are manufactured in conformance with specifications of EWP DESIGN INC. as outlined below.

SPECIFICATIONS

1. Trusses designed by EWP DESIGN INC. conform to the relevant section of the Ontario Building Code of Canada (Part 9 or Part 4) or to the Canadian code for farm buildings, whichever applies to the building type, as indicated on the EWP DESIGN INC. drawings, and conform to the design procedures established by the Truss Plate Institute of Canada. Unit stresses used for truss designs are as per the edition of CSA-O86 shown on EWP DESIGN INC. drawings.
2. Lumber is to be the size, species and grade as specified on EWP DESIGN INC. drawings.
3. Moisture content of lumber shall not exceed 19% in service unless specified otherwise.
4. Metal connector plates shall be applied to both faces of truss at each joint and shall be positioned as specified.
5. Top chords of trusses are assumed to be continuously braced laterally by roof sheathing or by purlins at intervals not exceeding 12.5 times the thickness of top chord member.
6. Bottom chords shall be laterally braced at intervals not exceeding 3M (10') o.c., where rigid ceiling is not applied directly to the underside of chords.

THESE DRAWINGS CONSTITUTE THE PROPERTY OF EWP DESIGN INC., SHALL NOT BE REPRODUCED, PUBLISHED, OR REDISTRIBUTED IN ANY MANNER OR UTILIZED FOR ANY PURPOSE OTHER THAN THE MANUFACTURE OF TRUSSES BY THE ALPA LUMBER GROUP, AND WILL BE RETRACTED BY EWP DESIGN INC. IF UTILIZED FOR ANY OTHER PURPOSE.

JOB NAME	TRUSS NAME	QUANTITY	PLY	JOB DESC.	DRWG NO.
313997	G02	1	1	TRUSS DESC. JT-39002	E-19112570

Alpa Roof Truss, Maple

Version 8.300 S Aug 9 2019 MiTek Industries, Inc. Mon Nov 11 13:33:03 2019 Page 1

ID:1djR6DYvLvIlXkyExRWgN1yQawr-RJEdYgoKEcvdN5Ed5xVG7qFa96Q7lqYAG1ctJ4yKFgU

Scale = 1:14.0

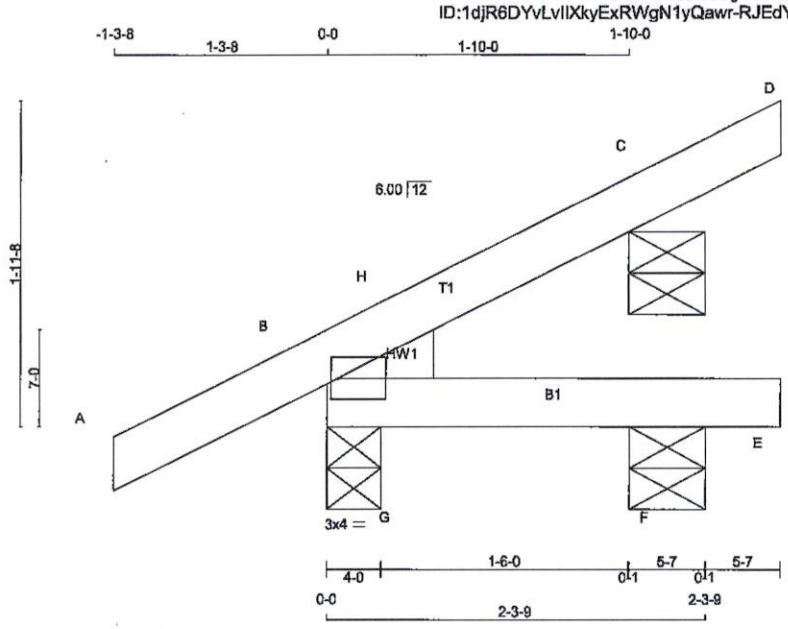

TOTAL WEIGHT = 6 X 9 = 55 lb

LUMBER

N. L. G. A. RULES

CHORDS	SIZE		LUMBER	DESCR.
A - D	2x4	DRY	No.2	SPF
B - E	2x4	DRY	No.2	SPF

DRY: SEASONED LUMBER.

PLATES (table is in inches)

JT	TYPE	PLATES	W	LEN	Y	X
B	TMBH1-I	MT20	3.0	4.0	1.50	0.50

NOTE: Lateral brace(s) shown shall be 2x4 SPF #2

LICENSED PROFESSIONAL ENGINEER
11/11/2019
R. TURENNE
100157040
PROVINCE OF ONTARIO

DIMENSIONS, SUPPORTS AND LOADINGS SPECIFIED BY FABRICATOR TO BE VERIFIED BY BUILDING DESIGNER

BEARINGS

JT	FACTORED GROSS REACTION VERT	HORZ	MAXIMUM FACTORED GROSS REACTION DOWN	HORZ	UPLIFT	INPUT BRG IN-SX	REQRD BRG IN-SX	HEEL WEDGE
B	222	0	222	0	0	4-0	1-8	2x4 L
F	46	0	46	0	0	5-8	1-8	
C	137	0	137	0	0	5-8	5-8	

BEVELED PLATE OR SHIM REQUIRED TO PROVIDE FULL BEARING SURFACE WITH TRUSS CHORD AT JT(S): C

UNFACTORED REACTIONS

JT	1ST LCASE COMBINED	MAX./MIN. COMPONENT REACTIONS SNOW	LIVE	PERM.LIVE	WIND	DEAD	SOIL
B	155	111 / 0	0 / 0	0 / 0	0 / 0	44 / 0	0 / 0
F	35	10 / 0	0 / 0	0 / 0	0 / 0	25 / 0	0 / 0
C	95	73 / 0	0 / 0	0 / 0	0 / 0	22 / 0	0 / 0

BEARING MATERIAL TO BE SPF NO.2 OR BETTER AT JOINT(S) B, F, C

BRACING

TOP CHORD TO BE SHEATHED OR MAX. PURLIN SPACING = 6.25 FT.
MAX. UNBRACED BOTTOM CHORD LENGTH = 10.00 FT OR RIGID CEILING DIRECTLY APPLIED.

ALL PITCH BREAKS AND PERIMETER CORNER JOINTS MUST BE LATERALLY RESTRAINED.

LOADING

TOTAL LOAD CASES: (5)

CHORDS

MEMB. FR-TO	MAX. FORCE (LBS)	FACTORED VERT. LOAD LC1 (PLF) FROM	TO	MAX CSI (LC)	MAX. UNBRAC LENGTH
A- B	0 / 16	-84.9	-84.9	0.12 (5)	10.00
B- H	-15 / 0	-84.9	-84.9	0.01 (4)	6.25
H- C	0 / 3	-84.9	-84.9	0.04 (1)	10.00
C- D	-14 / 0	-84.9	-84.9	0.03 (1)	6.25
B- G	0 / 0	-18.5	-18.5	0.04 (1)	10.00
G- F	0 / 0	-18.5	-18.5	0.04 (1)	10.00
F- E	0 / 0	-18.5	-18.5	0.01 (4)	10.00

WEBS

MEMB. FR-TO	MAX. FORCE (LBS)	MAX CSI (LC)
G- H	-61 / 0	0.00 (1)

CANTILEVER ANALYSIS HAS BEEN CONSIDERED IN THIS DESIGN

[M]

DESIGN CRITERIA

SPECIFIED LOADS:

TOP CH.	LL	=	23.3	PSF
	DL	=	6.0	PSF
BOT CH.	LL	=	0.0	PSF
	DL	=	7.4	PSF
TOTAL LOAD		=	36.7	PSF

SPACING = 24.0 IN. C/C

THIS TRUSS IS DESIGNED FOR RESIDENTIAL OR SMALL BUILDING REQUIREMENTS OF PART 9, NBCC 2010, NBCC 2015

THIS DESIGN COMPLIES WITH:
- PART 9 OF BCBC 2018 , OBC 2012 , ABC 2019
- CSA 086-09, CSA 086-14
- TPIC 2011, TPIC 2014

(55 % OF 27.2 P.S.F. G.S.L. PLUS 8.4 P.S.F. RAIN LOAD) EQUALS 23.3 P.S.F. SPECIFIED ROOF LIVE LOAD

ALLOWABLE DEFL.(LL)= L/360 (0.19")
CALCULATED VERT. DEFL.(LL) = L/ 999 (0.00")
ALLOWABLE DEFL.(TL)= L/360 (0.19")
CALCULATED VERT. DEFL.(TL) = L/ 999 (0.00")

CANTILEVER DEFLECTION:
ALLOWABLE DEFL.(TL)= L/120 (0.19")
CALCULATED VERT. DEFL.(TL) = L/ 999 (0.00")

CSI: TC=0.12/1.00 (A-B:5) , BC=0.04/1.00 (B-G:1) , WB=0.00/1.00 (G-H:1) , SSI=0.09/1.00 (A-B:5)

DOL LUMBER=1.00 NAIL=1.00 LS BEND=1.10 COMP=1.10 SHEAR=1.10 TENS= 1.10

COMPANION LIVE LOAD FACTOR = 1.00

TRUSS PLATE MANUFACTURER IS NOT RESPONSIBLE FOR QUALITY CONTROL IN THE TRUSS MANUFACTURING PLANT .

NAIL VALUES

PLATE	GRIP(DRY) (PSI) MAX	MIN	SHEAR (PLI) MAX	MIN	SECTION (PLI) MAX	MIN
MT20	618	354	1667	788	1987	1656

PLATE PLACEMENT TOL. = 0.250 inches

PLATE ROTATION TOL. = 5.0 Deg.

JSI GRIP= 0.69 (B) (INPUT = 0.90)
JSI METAL= 0.04 (B) (INPUT = 1.00)

JOB NAME	TRUSS NAME	QUANTITY	PLY	JOB DESC.	DRWG NO.
313997	H1A		2	TRUSS DESC. JT-39002	E-19112571

Alpa Roof Truss, Maple

Version 8.300 S Aug 9 2019 MiTek Industries, Inc. Mon Nov 11 13:51:05 2019 Page 1

ID:1djR6DYvLvIlXkyExRWgN1yQawr-ITcgeev0Q2E6BNyaTAw?z?3MfGelG19R3Ni8HMyKFPa

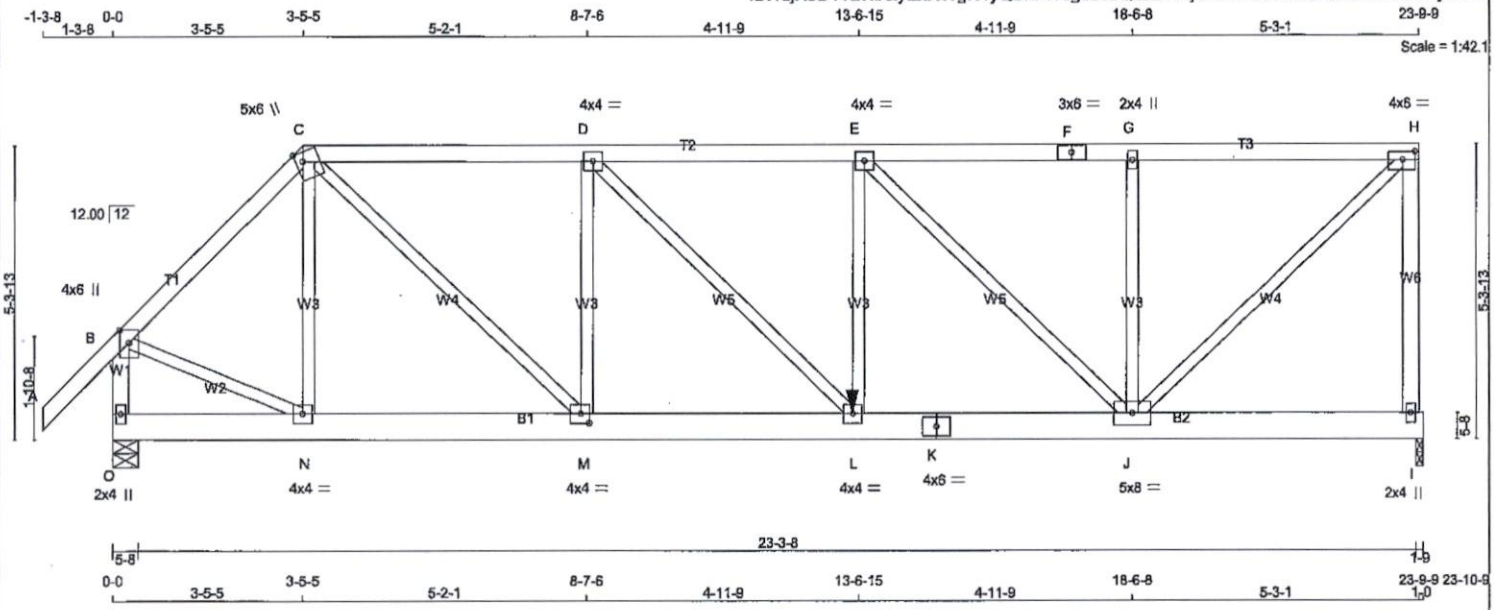

TOTAL WEIGHT = 2 X 120 = 240 lb

[M]

LUMBER

N. L. G. A. RULES

CHORDS	SIZE		LUMBER	DESCR.
A - C	2x4	DRY	No.2	SPF
C - F	2x4	DRY	No.2	SPF
F - H	2x4	DRY	No.2	SPF
I - H	2x4	DRY	No.2	SPF
O - B	2x4	DRY	No.2	SPF
O - K	2x6	DRY	No.2	SPF
K - I	2x6	DRY	No.2	SPF
ALL WEBS EXCEPT	2x3	DRY	No.2	SPF

DRY: SEASONED LUMBER.

DESIGN CONSISTS OF 2 TRUSSES BUILT SEPARATELY THEN FASTENED TOGETHER AS FOLLOWS:

CHORDS	#ROWS	SURFACE SPACING (IN)	LOAD(PLF)
TOP CHORDS : (0.122"X3") SPIRAL NAILS			
A- C	1	12	TOP
C- F	1	12	SIDE(41.1)
F- H	1	12	SIDE(41.1)
H- I	1	12	TOP
O- B	1	12	TOP
BOTTOM CHORDS : (0.122"X3") SPIRAL NAILS			
O- K	2	12	SIDE(174.2)
K- I	2	12	SIDE(10.0)
WEBS : (0.122"X3") SPIRAL NAILS			
L- E	1	6	SIDE(113.5)
2x3	1	6	

NAILS TO BE DRIVEN FROM ONE SIDE ONLY.

GIRDER NAILING ASSUMES NAILED HANGERS ARE FASTENED WITH MIN. 3-0 INCH NAILS.

TOP - COMPONENTS ARE LOADED FROM THE TOP AND MUST BE PLACED ON TOP EDGE OF ALL PLIES FOR THE LOAD TO BE TRANSFERRED TO EACH PLY.

NOTE: Lateral brace(s) shown shall be 2x4 SPF #2

LICENSED PROFESSIONAL ENGINEER
11/11/2019
R. TURENNE
100157040
PROVINCE OF ONTARIO

DIMENSIONS, SUPPORTS AND LOADINGS SPECIFIED BY FABRICATOR TO BE VERIFIED BY BUILDING DESIGNER

BEARINGS

JT	FACTORED GROSS REACTION VERT	HORZ	MAXIMUM FACTORED GROSS REACTION DOWN	HORZ	UPLIFT	INPUT BRG IN-SX	REQRD BRG IN-SX
I	2663	0	2663	0	0	1-9	1-8
O	2041	0	2041	0	0	5-8	1-8

UNFACTORED REACTIONS

MAX./MIN. COMPONENT REACTIONS

JT	1ST LCASE COMBINED	SNOW	LIVE	PERM.LIVE	WIND	DEAD	SOIL
I	1890	1200 / 0	0 / 0	0 / 0	0 / 0	690 / 0	0 / 0
O	1447	932 / 0	0 / 0	0 / 0	0 / 0	515 / 0	0 / 0

BEARING MATERIAL TO BE SPF NO.2 OR BETTER AT JOINT(S) I, O

BRACING

TOP CHORD TO BE SHEATHED OR MAX. PURLIN SPACING = 4.88 FT.
MAX. UNBRACED BOTTOM CHORD LENGTH = 10.00 FT OR RIGID CEILING DIRECTLY APPLIED.

ALL PITCH BREAKS AND PERIMETER CORNER JOINTS MUST BE LATERALLY RESTRAINED.

LOADING

TOTAL LOAD CASES: (4)

CHORDS

MEMB. FR-TO	MAX. FACTORED FORCE (LBS)	FACTORED VERT. LOAD LC1 (PLF) FROM	TO	MAX CSI (LC)	MAX. UNBRAC LENGTH
A- B	0 / 42	-84.9	-84.9	0.07 (1)	10.00
B- C	-1766 / 0	-84.9	-84.9	0.11 (1)	6.25
C- D	-2620 / 0	-84.9	-84.9	0.20 (1)	5.41
D- E	-3384 / 0	-84.9	-84.9	0.22 (1)	4.88
E- F	-2366 / 0	-167.1	-167.1	0.40 (1)	5.31
F- G	-2366 / 0	-167.1	-167.1	0.40 (1)	5.31
G- H	-2366 / 0	-167.1	-167.1	0.40 (1)	5.31
I- H	-2574 / 0	0.0	0.0	0.59 (1)	7.07
O- B	-2023 / 0	0.0	0.0	0.12 (1)	7.75
D- N	0 / 0	-18.5	-18.5	0.02 (4)	10.00
N- M	0 / 1235	-18.5	-18.5	0.10 (1)	10.00
M- L	0 / 2620	-18.5	-18.5	0.20 (1)	10.00
L- K	0 / 3384	-36.4	-36.4	0.27 (1)	10.00
K- J	0 / 3384	-36.4	-36.4	0.27 (1)	10.00
J- I	0 / 0	-36.4	-36.4	0.05 (4)	10.00

WEBS

MEMB. FR-TO	MAX. FACTORED FORCE (LBS)	MAX CSI (LC)
N- C	-402 / 0	0.08 (1)
B- N	0 / 1342	0.17 (1)
C- M	0 / 1910	0.24 (1)
M- D	-1218 / 0	0.25 (1)
D- L	0 / 1079	0.13 (1)
L- E	0 / 447	0.06 (1)
E- J	-1438 / 0	0.66 (1)
J- G	-999 / 0	0.20 (1)
J- H	0 / 3247	0.40 (1)

FACTORED CONCENTRATED LOADS (LBS)

JT	LOC.	LC1	MAX-	MAX+	FACE	DIR.	TYPE	HEEL	CONN.
L	13-5-9	-1103	-1103	---	FRONT	VERT	TOTAL	---	C1

DESIGN CRITERIA

*** SPECIAL LOADS ANALYSIS ***
GEOMETRY AND/OR BASIC LOADS CHANGED BY USER.
LOADS WERE DERIVED FROM USER INPUT
NO FURTHER MODIFICATIONS WERE MADE

SPECIFIED LOADS:

TOP	CH.	LL	=	23.3	PSF
		DL	=	6.0	PSF
BOT	CH.	LL	=	0.0	PSF
		DL	=	7.4	PSF
TOTAL	LOAD		=	36.7	PSF

SPACING = 24.0 IN. C/C

LOADING IN FLAT SECTION BASED ON A SLOPE OF 2.00/12 MINIMUM

GIRDER TYPE: CPrimeHip
LEFT SETBACK = 3-5-5
RIGHT SETBACK = 0-0
END SETBACK = 5-10-8
END WALL WIDTH = 0-0
CORNER FRAMING TYPE: CONVENTIONAL
END JACK TYPE: CONVENTIONAL
APPLIED TO FRONT SIDE
- ADDT'L LOADS BASED ON 55 % OF GSL.
LOADS APPLIED TO FIRST 10-5-0 OF SPAN MEASURED FROM THE RIGHT.

*** NON STANDARD GIRDER ***
ADDT'L USER-DEFINED LOADS APPLIED TO ALL LOAD CASES.

THIS TRUSS IS DESIGNED FOR RESIDENTIAL OR SMALL BUILDING REQUIREMENTS OF PART 9, NBCC 2010, NBCC 2015

THIS DESIGN COMPLIES WITH:
- PART 9 OF BCBC 2018 , OBC 2012 , ABC 2019
- CSA 086-09, CSA 086-14
- TPIC 2011, TPIC 2014

(55 % OF 27.2 P.S.F. G.S.L. PLUS 8.4 P.S.F. RAIN LOAD) EQUALS 23.3 P.S.F. SPECIFIED ROOF LIVE LOAD

ALLOWABLE DEFL.(LL)= L/360 (0.79")
CALCULATED VERT. DEFL.(LL) = L/ 999 (0.05")
ALLOWABLE DEFL.(TL)= L/360 (0.79")
CALCULATED VERT. DEFL.(TL) = L/ 999 (0.10")

CSI: TC=0.59/1.00 (H-I:1) , BC=0.27/1.00 (J-L:1) , WB=0.66/1.00 (E-J:1) , SSI=0.23/1.00 (G-H:1)

DOL LUMBER=1.00 NAIL=1.00 LS BEND=1.00 COMP=1.00 SHEAR=1.00 TENS= 1.00

COMPANION LIVE LOAD FACTOR = 1.00

AUTOSOLVE RIGHT HEEL ONLY

TRUSS PLATE MANUFACTURER IS NOT RESPONSIBLE FOR QUALITY CONTROL IN THE TRUSS MANUFACTURING PLANT .

CONTINUED ON PAGE 2

JOB NAME	TRUSS NAME	QUANTITY	PLY	JOB DESC.	DRWG NO.
313997	H1A		2	TRUSS DESC. JT-39002	E-19112571(2)

Alpa Roof Truss, Maple

ID:1djR6DYvLvIIXkyExRWgN1yQawr-ITcgeev0Q2E6BNyaTAw?z?3MfGelG19R3Ni8HMyKFPa

PLATES (table is in inches)

JT	TYPE	PLATES	W	LEN	Y	X
B	TMVW+p	MT20	4.0	6.0	2.75	2.00
C	TTWW+m	MT20	5.0	6.0	2.00	1.50
D	TMWW-t	MT20	4.0	4.0		
E	TMWW-t	MT20	4.0	4.0		
F	TS-t	MT20	3.0	6.0		
G	TMW+w	MT20	2.0	4.0		
H	TMVW-t	MT20	4.0	6.0	1.75	2.75
I	BMV1+p	MT20	2.0	4.0		
J	BMWWW-t	MT20	5.0	8.0		
K	BS-t	MT20	4.0	6.0		
L	BMWW-t	MT20	4.0	4.0		
M	BMWW-t	MT20	4.0	4.0	2.00	1.75
N	BMWW-t	MT20	4.0	4.0		
O	BMV1+p	MT20	2.0	4.0		

NOTE: Lateral brace(s) shown shall be 2x4 SPF #2

LICENSED PROFESSIONAL ENGINEER
11/11/2019
R. TURENNE
100157040
PROVINCE OF ONTARIO

NAIL VALUES

PLATE	GRIP(DRY) (PSI) MAX	MIN	SHEAR (PLI) MAX	MIN	SECTION (PLI) MAX	MIN
MT20	618	354	1667	788	1987	1656

PLATE PLACEMENT TOL. = 0.250 inches

PLATE ROTATION TOL. = 5.0 Deg.

JSI GRIP= 0.88 (H) (INPUT = 0.90)
JSI METAL= 0.45 (K) (INPUT = 1.00)

JOB NAME	TRUSS NAME	QUANTITY	PLY	JOB DESC.	DRWG NO.
313997	H9		2	TRUSS DESC. JT-39002	E-19112572

Alpa Roof Truss, Maple

Version 8.300 S Aug 9 2019 MiTek Industries, Inc. Mon Nov 11 13:50:01 2019 Page 1

ID:1djR6DYvLvlIXkyExRWgN1yQawr-d9kTCm7tUOABVY3Hjkm_NVPSiTl4HAr0LQCl23yKFQa

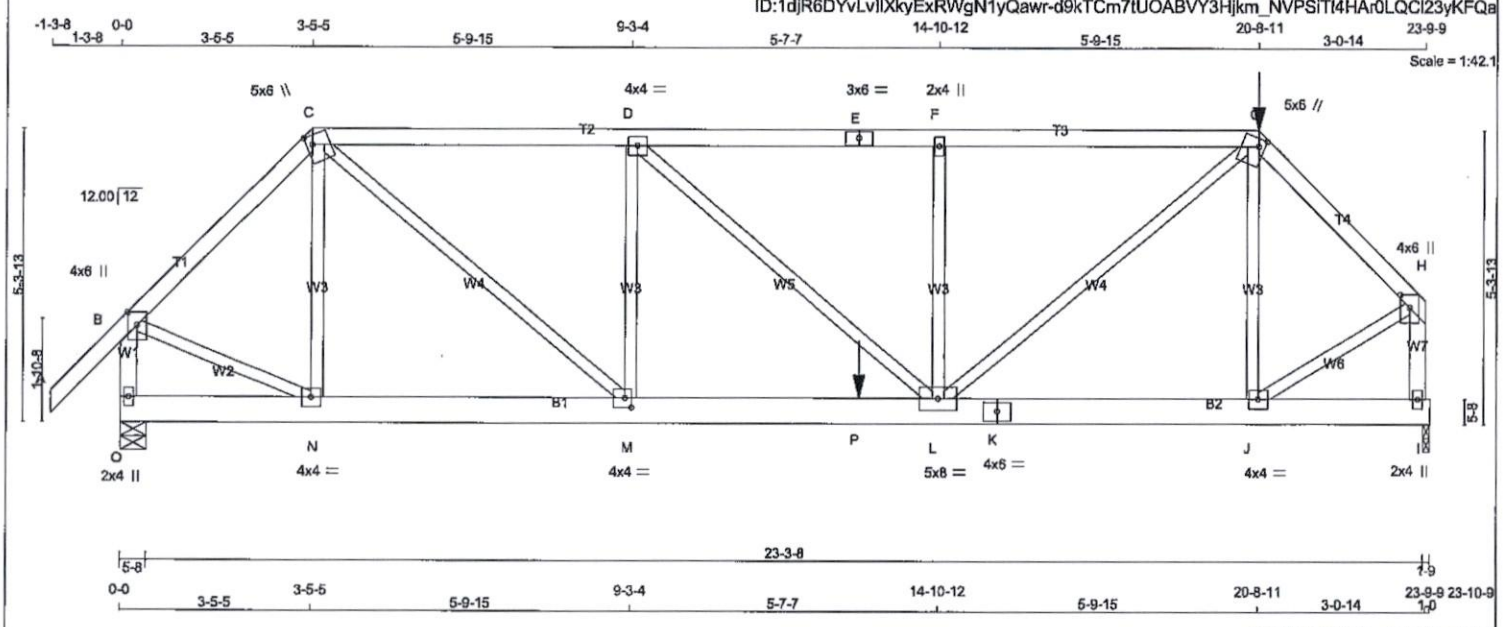

TOTAL WEIGHT = 2 X 117 = 234 lb

[M]

LUMBER

N. L. G. A. RULES

CHORDS	SIZE		LUMBER	DESCR.
A - C	2x4	DRY	No.2	SPF
C - E	2x4	DRY	No.2	SPF
E - G	2x4	DRY	No.2	SPF
G - H	2x4	DRY	No.2	SPF
O - B	2x4	DRY	No.2	SPF
I - H	2x4	DRY	No.2	SPF
O - K	2x6	DRY	No.2	SPF
K - I	2x6	DRY	No.2	SPF
ALL WEBS EXCEPT	2x3	DRY	No.2	SPF

DRY: SEASONED LUMBER.

DESIGN CONSISTS OF 2 TRUSSES BUILT SEPARATELY THEN FASTENED TOGETHER AS FOLLOWS:

CHORDS	#ROWS	SURFACE SPACING (IN)	LOAD(PLF)
TOP CHORDS : (0.122"X3") SPIRAL NAILS			
A- C	1	12	TOP
C- E	1	12	TOP
E- G	1	12	SIDE(41.1)
G- H	1	12	SIDE(61.0)
O- B	1	12	TOP
I- H	1	12	TOP
BOTTOM CHORDS : (0.122"X3") SPIRAL NAILS			
O- K	2	12	SIDE(10.0)
K- I	2	12	SIDE(10.0)
WEBS : (0.122"X3") SPIRAL NAILS			
J- G	1	6	SIDE(9.9)
2x3	1	6	

NAILS TO BE DRIVEN FROM ONE SIDE ONLY.

GIRDER NAILING ASSUMES NAILED HANGERS ARE FASTENED WITH MIN. 3-0 INCH NAILS.

TOP - COMPONENTS ARE LOADED FROM THE TOP AND MUST BE PLACED ON TOP EDGE OF ALL PLIES FOR THE LOAD TO BE TRANSFERRED TO EACH PLY.

NOTE: Lateral brace(s) shown shall be 2x4 SPF #2

LICENSED PROFESSIONAL ENGINEER
11/11/2019
R. TURENNE
100157040
PROVINCE OF ONTARIO

DIMENSIONS, SUPPORTS AND LOADINGS SPECIFIED BY FABRICATOR TO BE VERIFIED BY BUILDING DESIGNER

BEARINGS

JT	FACTORED GROSS REACTION VERT	HORZ	MAXIMUM FACTORED GROSS REACTION DOWN	HORZ	UPLIFT	INPUT BRG IN-SX	REQRD BRG IN-SX
O	2061	0	2061	0	0	5-8	1-8
I	2599	0	2599	0	0	1-9	1-8

UNFACTORED REACTIONS

1ST LCASE — MAX./MIN. COMPONENT REACTIONS

JT	COMBINED	SNOW	LIVE	PERM.LIVE	WIND	DEAD	SOIL
O	1461	941 / 0	0 / 0	0 / 0	0 / 0	519 / 0	0 / 0
I	1846	1165 / 0	0 / 0	0 / 0	0 / 0	681 / 0	0 / 0

BEARING MATERIAL TO BE SPF NO.2 OR BETTER AT JOINT(S) O, I

BRACING

TOP CHORD TO BE SHEATHED OR MAX. PURLIN SPACING = 4.55 FT.
MAX. UNBRACED BOTTOM CHORD LENGTH = 10.00 FT OR RIGID CEILING DIRECTLY APPLIED.

ALL PITCH BREAKS AND PERIMETER CORNER JOINTS MUST BE LATERALLY RESTRAINED.

LOADING

TOTAL LOAD CASES: (4)

CHORDS

MEMB. FR-TO	MAX. FACTORED FORCE (LBS)	FACTORED VERT. LOAD (PLF) FROM	TO	LC1 MAX CSI (LC)	MAX. UNBRAC LENGTH
A- B	0 / 42	-84.9	-84.9	0.07 (1)	10.00
B- C	-1767 / 0	-84.9	-84.9	0.11 (1)	6.25
C- D	-2850 / 0	-84.9	-84.9	0.25 (1)	5.19
D- E	-3375 / 0	-84.9	-84.9	0.44 (1)	4.59
E- F	-3375 / 0	-167.1	-167.1	0.44 (1)	4.59
F- G	-3374 / 0	-167.1	-167.1	0.47 (1)	4.55
G- H	-2167 / 0	-84.9	-84.9	0.10 (1)	5.94
O- B	-2025 / 0	0.0	0.0	0.12 (1)	7.75
I- H	-2538 / 0	0.0	0.0	0.16 (1)	7.11
O- N	0 / 0	-18.5	-18.5	0.01 (4)	10.00
N- M	0 / 1234	-18.5	-18.5	0.18 (1)	10.00
M- P	0 / 2850	-18.5	-18.5	0.50 (1)	10.00
P- L	0 / 2850	-36.4	-36.4	0.50 (1)	10.00
L- K	0 / 1508	-36.4	-36.4	0.25 (1)	10.00
K- J	0 / 1508	-36.4	-36.4	0.25 (1)	10.00
J- I	0 / 0	-36.4	-36.4	0.03 (4)	10.00

WEBS

MEMB. FR-TO	MAX. FACTORED FORCE (LBS)	MAX CSI (LC)
N- C	-474 / 0	0.10 (1)
J- G	-784 / 0	0.16 (1)
B- N	0 / 1343	0.17 (1)
J- H	0 / 1755	0.22 (1)
C- M	0 / 2113	0.26 (1)
M- D	-948 / 0	0.19 (1)
D- L	0 / 698	0.09 (1)
L- F	-932 / 0	0.19 (1)
L- G	0 / 2441	0.30 (1)

FACTORED CONCENTRATED LOADS (LBS)

JT	LOC.	LC1	MAX-	MAX+	FACE	DIR.	TYPE	HEEL	CONN.
G	20-8-11	-195	-195	—	FRONT	VERT	TOTAL	—	C1
P	13-5-9	-1103	-1103	—	FRONT	VERT	TOTAL	—	C1

DESIGN CRITERIA

*** SPECIAL LOADS ANALYSIS ***
GEOMETRY AND/OR BASIC LOADS CHANGED BY USER.
LOADS WERE DERIVED FROM USER INPUT
NO FURTHER MODIFICATIONS WERE MADE

SPECIFIED LOADS:

TOP CH.	LL	=	23.3	PSF
	DL	=	6.0	PSF
BOT CH.	LL	=	0.0	PSF
	DL	=	7.4	PSF
TOTAL LOAD		=	36.7	PSF

SPACING = 24.0 IN. C/C

LOADING IN FLAT SECTION BASED ON A SLOPE OF 2.00/12 MINIMUM

GIRDER TYPE: CPrimeHip
LEFT SETBACK = 3-5-5
RIGHT SETBACK = 3-1-14
END SETBACK = 5-10-8
END WALL WIDTH = 0-0
CORNER FRAMING TYPE: CONVENTIONAL
END JACK TYPE: CONVENTIONAL
APPLIED TO FRONT SIDE
- ADDT'L LOADS BASED ON 55 % OF GSL. LOADS APPLIED TO FIRST 10-5-0 OF SPAN MEASURED FROM THE RIGHT.

*** NON STANDARD GIRDER ***
ADDT'L USER-DEFINED LOADS APPLIED TO ALL LOAD CASES.

THIS TRUSS IS DESIGNED FOR RESIDENTIAL OR SMALL BUILDING REQUIREMENTS OF PART 9, NBCC 2010, NBCC 2015

THIS DESIGN COMPLIES WITH:
- PART 9 OF BCBC 2018 , OBC 2012 , ABC 2019
- CSA 086-09, CSA 086-14
- TPIC 2011, TPIC 2014

(55 % OF 27.2 P.S.F. G.S.L. PLUS 8.4 P.S.F. RAIN LOAD) EQUALS 23.3 P.S.F. SPECIFIED ROOF LIVE LOAD

ALLOWABLE DEFL.(LL)= L/360 (0.79")
CALCULATED VERT. DEFL.(LL) = L/ 999 (0.07")
ALLOWABLE DEFL.(TL)= L/360 (0.79")
CALCULATED VERT. DEFL.(TL) = L/ 999 (0.13")

CSI: TC=0.47/1.00 (F-G:1) , BC=0.50/1.00 (L-M:1) , WB=0.30/1.00 (G-L:1) , SSI=0.31/1.00 (L-M:1)

DOL LUMBER=1.00 NAIL=1.00 LS BEND=1.00 COMP=1.00 SHEAR=1.00 TENS= 1.00

COMPANION LIVE LOAD FACTOR = 1.00

TRUSS PLATE MANUFACTURER IS NOT RESPONSIBLE FOR QUALITY CONTROL IN THE TRUSS MANUFACTURING PLANT .

CONTINUED ON PAGE 2

JOB NAME	TRUSS NAME	QUANTITY	PLY	JOB DESC.		DRWG NO.
313997	H9		2	TRUSS DESC.	JT-39002	E-19112572(2)

Alpa Roof Truss, Maple

Version 8.300 S Aug 9 2019 MiTek Industries, Inc. Mon Nov 11 13:50:01 2019 Page 2

ID:1djR6DYvLvIlXkyExRWgN1yQawr-d9kTCm7tUOABVY3Hjjkm_NVPSiTI4HAr0LQCI23yKFQa

PLATES (table is in inches)

JT	TYPE	PLATES	W	LEN	Y	X
B	TMVW+p	MT20	4.0	6.0	2.75	2.00
C	TTWW+m	MT20	5.0	6.0	2.00	1.25
D	TMWW-t	MT20	4.0	4.0		
E	TS-t	MT20	3.0	6.0		
F	TMW+w	MT20	2.0	4.0		
G	TTWW+m	MT20	5.0	6.0	1.75	1.25
H	TMVW+p	MT20	4.0	6.0	2.75	2.00
I	BMV1+p	MT20	2.0	4.0		
J	BMWW-t	MT20	4.0	4.0		
K	BS-t	MT20	4.0	6.0		
L	BMWWW-t	MT20	5.0	8.0		
M	BMWW-t	MT20	4.0	4.0	2.00	1.50
N	BMWW-t	MT20	4.0	4.0		
O	BMV1+p	MT20	2.0	4.0		

NOTE: Lateral brace(s) shown shall be 2x4 SPF #2

LICENSED PROFESSIONAL ENGINEER
11/11/2019
R. TURENNE
100157040
PROVINCE OF ONTARIO

NAIL VALUES

PLATE	GRIP(DRY) (PSI) MAX	MIN	SHEAR (PLI) MAX	MIN	SECTION (PLI) MAX	MIN
MT20	618	354	1667	788	1987	1656

PLATE PLACEMENT TOL. = 0.250 inches

PLATE ROTATION TOL. = 5.0 Deg.

JSI GRIP= 0.90 (J) (INPUT = 0.90)
JSI METAL= 0.42 (H) (INPUT = 1.00)

JOB NAME	TRUSS NAME	QUANTITY	PLY	JOB DESC.	DRWG NO.
313997	H10		1	TRUSS DESC. JT-39002	E-19112573

Alpa Roof Truss, Maple

Version 8.300 S Aug 9 2019 MiTek Industries, Inc. Mon Nov 11 13:47:50 2019 Page 1

ID:1djR6DYvLvIlXkyExRWgN1yQawr-zyKyjzXiL8gmIPY6YjwGZtUy7f464tSkDXzJx9yKFSd

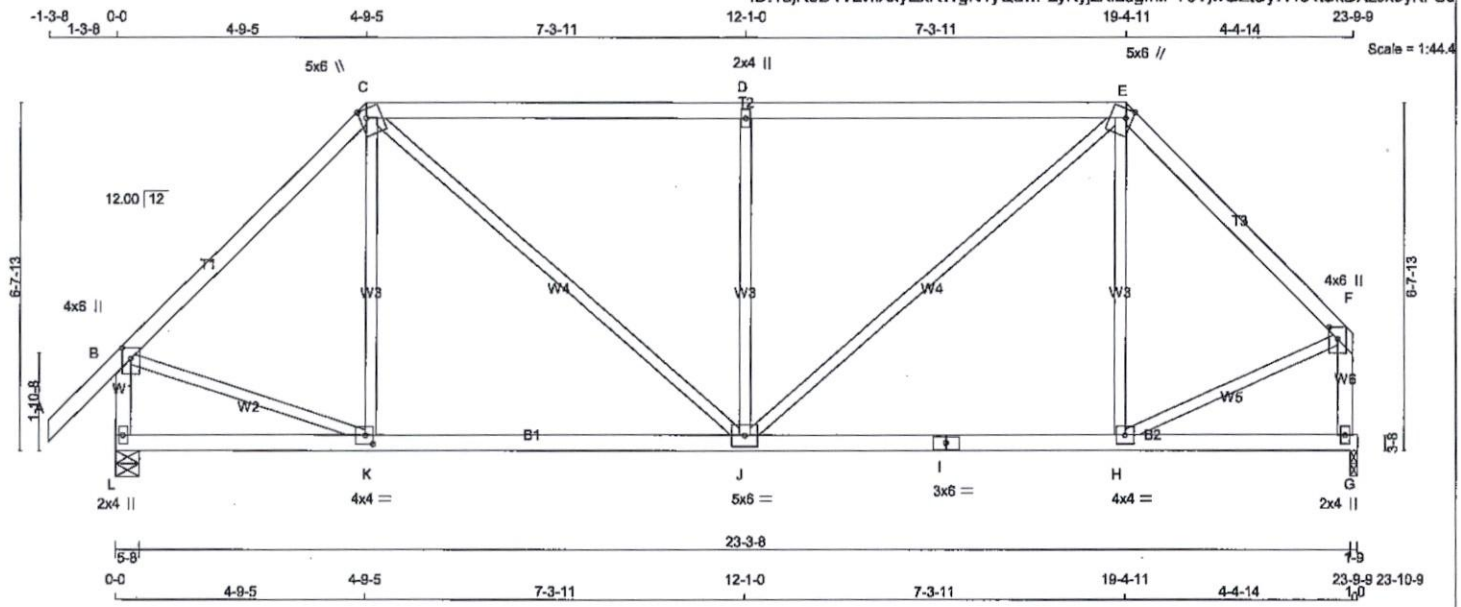

TOTAL WEIGHT = 103 lb

[M]

LUMBER

N. L. G. A. RULES

CHORDS	SIZE		LUMBER	DESCR.
A - C	2x4	DRY	No.2	SPF
C - E	2x4	DRY	No.2	SPF
E - F	2x4	DRY	No.2	SPF
L - B	2x4	DRY	No.2	SPF
G - F	2x4	DRY	No.2	SPF
L - I	2x4	DRY	No.2	SPF
I - G	2x4	DRY	No.2	SPF
ALL WEBS EXCEPT	2x3	DRY	No.2	SPF

DRY: SEASONED LUMBER.

PLATES (table is in inches)

JT	TYPE	PLATES	W	LEN	Y	X
B	TMVW+p	MT20	4.0	6.0	2.50	2.00
C	TTWW+m	MT20	5.0	6.0	2.00	1.50
D	TMW+w	MT20	2.0	4.0		
E	TTWW+m	MT20	5.0	6.0	2.00	1.50
F	TMVW+p	MT20	4.0	6.0	2.75	2.00
G	BMV1+p	MT20	2.0	4.0		
H	BMWW-t	MT20	4.0	4.0		
I	BS-t	MT20	3.0	6.0		
J	BMWWW-t	MT20	5.0	6.0		
K	BMWW-t	MT20	4.0	4.0	2.00	1.75
L	BMV1+p	MT20	2.0	4.0		

NOTE: Lateral brace(s) shown shall be 2x4 SPF #2

LICENSED PROFESSIONAL ENGINEER
11/11/2019
R. TURENNE
100157040
PROVINCE OF ONTARIO

DIMENSIONS, SUPPORTS AND LOADINGS SPECIFIED BY FABRICATOR TO BE VERIFIED BY BUILDING DESIGNER

BEARINGS

JT	FACTORED GROSS REACTION VERT	HORZ	MAXIMUM FACTORED GROSS REACTION DOWN	HORZ	UPLIFT	INPUT BRG IN-SX	REQRD BRG IN-SX
L	1348	0	1348	0	0	5-8	2-0
G	1230	0	1230	0	0	1-9	1-8

UNFACTORED REACTIONS

JT	1ST LCASE COMBINED	MAX./MIN. COMPONENT REACTIONS SNOW	LIVE	PERM.LIVE	WIND	DEAD	SOIL
L	955	619 / 0	0 / 0	0 / 0	0 / 0	336 / 0	0 / 0
G	873	554 / 0	0 / 0	0 / 0	0 / 0	319 / 0	0 / 0

BEARING MATERIAL TO BE SPF NO.2 OR BETTER AT JOINT(S) L, G

BRACING

TOP CHORD TO BE SHEATHED OR MAX. PURLIN SPACING = 4.14 FT.
MAX. UNBRACED BOTTOM CHORD LENGTH = 10.00 FT OR RIGID CEILING DIRECTLY APPLIED.

ALL PITCH BREAKS AND PERIMETER CORNER JOINTS MUST BE LATERALLY RESTRAINED.

LOADING

TOTAL LOAD CASES: (4)

CHORDS

MEMB. FR-TO	MAX. FACTORED FORCE (LBS)	FACTORED VERT. LOAD LC1 (PLF) FROM	TO	MAX CSI (LC)	MAX. UNBRAC LENGTH
A- B	0 / 42	-84.9	-84.9	0.12 (1)	10.00
B- C	-1072 / 0	-84.9	-84.9	0.39 (1)	5.60
C- D	-1249 / 0	-84.9	-84.9	0.90 (1)	4.14
D- E	-1249 / 0	-84.9	-84.9	0.90 (1)	4.14
E- F	-1011 / 0	-84.9	-84.9	0.32 (1)	5.81
L- B	-1317 / 0	0.0	0.0	0.15 (1)	7.05
G- F	-1203 / 0	0.0	0.0	0.15 (1)	7.29
L- K	0 / 0	-18.5	-18.5	0.16 (4)	10.00
K- J	0 / 754	-18.5	-18.5	0.27 (4)	10.00
J- I	0 / 709	-18.5	-18.5	0.26 (4)	10.00
I- H	0 / 709	-18.5	-18.5	0.26 (4)	10.00
H- G	0 / 0	-18.5	-18.5	0.15 (4)	10.00

WEBS

MEMB. FR-TO	MAX. FACTORED FORCE (LBS)	MAX CSI (LC)
K- C	-111 / 50	0.08 (1)
C- J	0 / 656	0.15 (1)
J- D	-761 / 0	0.56 (1)
J- E	0 / 714	0.16 (1)
H- E	-177 / 23	0.13 (1)
B- K	0 / 791	0.18 (1)
H- F	0 / 772	0.17 (1)

DESIGN CRITERIA

SPECIFIED LOADS:

TOP CH.	LL	=	23.3	PSF
	DL	=	6.0	PSF
BOT CH.	LL	=	0.0	PSF
	DL	=	7.4	PSF
TOTAL LOAD		=	36.7	PSF

SPACING = 24.0 IN. C/C

LOADING IN FLAT SECTION BASED ON A SLOPE OF 2.00/12 MINIMUM

THIS TRUSS IS DESIGNED FOR RESIDENTIAL OR SMALL BUILDING REQUIREMENTS OF PART 9, NBCC 2010, NBCC 2015

THIS DESIGN COMPLIES WITH:
- PART 9 OF BCBC 2018 , OBC 2012 , ABC 2019
- CSA 086-09, CSA 086-14
- TPIC 2011, TPIC 2014

(55 % OF 27.2 P.S.F. G.S.L. PLUS 8.4 P.S.F. RAIN LOAD) EQUALS 23.3 P.S.F. SPECIFIED ROOF LIVE LOAD

ALLOWABLE DEFL.(LL)= L/360 (0.79")
CALCULATED VERT. DEFL.(LL) = L/ 999 (0.04")
ALLOWABLE DEFL.(TL)= L/360 (0.79")
CALCULATED VERT. DEFL.(TL) = L/ 999 (0.09")

CSI: TC=0.90/1.00 (D-E:1) , BC=0.27/1.00 (J-K:4) , WB=0.58/1.00 (D-J:1) , SSI=0.30/1.00 (C-D:1)

DOL LUMBER=1.00 NAIL=1.00 LS BEND=1.10 COMP=1.10 SHEAR=1.10 TENS= 1.10

COMPANION LIVE LOAD FACTOR = 1.00

TRUSS PLATE MANUFACTURER IS NOT RESPONSIBLE FOR QUALITY CONTROL IN THE TRUSS MANUFACTURING PLANT .

NAIL VALUES

PLATE	GRIP(DRY) (PSI) MAX	MIN	SHEAR (PLI) MAX	MIN	SECTION (PLI) MAX	MIN
MT20	618	354	1667	788	1987	1656

PLATE PLACEMENT TOL. = 0.250 inches

PLATE ROTATION TOL. = 5.0 Deg.

JSI GRIP= 0.85 (H) (INPUT = 0.90)
JSI METAL= 0.48 (B) (INPUT = 1.00)

JOB NAME	TRUSS NAME	QUANTITY	PLY	JOB DESC.	DRWG NO.
313997	H11S	1	1	TRUSS DESC. JT-39002	E-19112574

Alpa Roof Truss, Maple

Version 8.300 S Aug 9 2019 MiTek Industries, Inc. Mon Nov 11 13:32:12 2019 Page 1

ID:1djR6DYvLvlIXkyExRWgN1yQawr-QVeLrEBKFxUsmFqqbj5IY3dpBYyfJgofXclh1XyKFhIH

Scale = 1:58.7

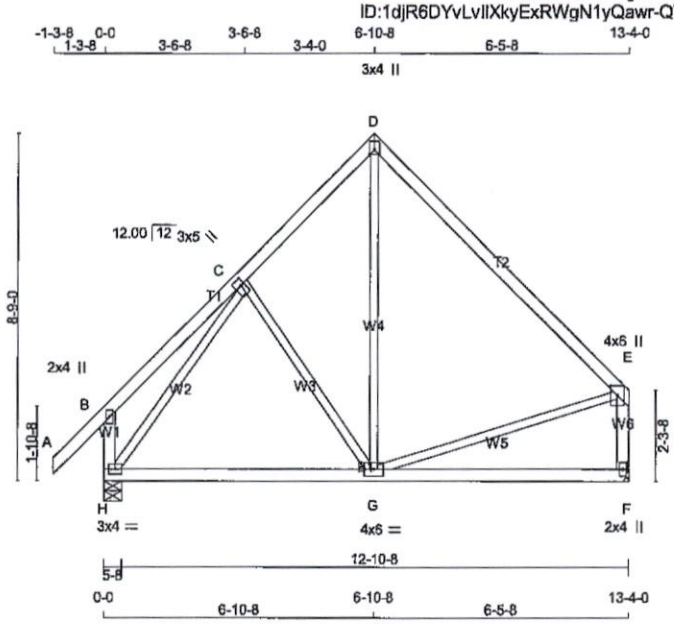

TOTAL WEIGHT = 6 X 64 = 385 lb

LUMBER

N. L. G. A. RULES

CHORDS	SIZE		LUMBER	DESCR.
A - D	2x4	DRY	No.2	SPF
D - E	2x4	DRY	2100F 1.8E	SPF
H - B	2x4	DRY	No.2	SPF
F - E	2x4	DRY	No.2	SPF
H - F	2x4	DRY	No.2	SPF
ALL WEBS EXCEPT	2x3	DRY	No.2	SPF

DRY: SEASONED LUMBER.

PLATES (table is in inches)

JT	TYPE	PLATES	W	LEN	Y	X
B	TMV+p	MT20	2.0	4.0		
C	TMWW+t	MT20	3.0	5.0	2.00	1.00
D	TTW+p	MT20	3.0	4.0	Edge	
E	TMVW+p	MT20	4.0	6.0	2.75	2.00
F	BMV1+p	MT20	2.0	4.0		
G	BMWWW-t	MT20	4.0	6.0		
H	BMVW1-t	MT20	3.0	4.0		

Edge - INDICATES REFERENCE CORNER OF PLATE TOUCHES EDGE OF CHORD.

NOTE: Lateral brace(s) shown shall be 2x4 SPF #2

LICENSED PROFESSIONAL ENGINEER
11/11/2019
R. TURENNE
100157040
PROVINCE OF ONTARIO

DIMENSIONS, SUPPORTS AND LOADINGS SPECIFIED BY FABRICATOR TO BE VERIFIED BY BUILDING DESIGNER

BEARINGS

JT	FACTORED GROSS REACTION VERT	HORZ	MAXIMUM FACTORED GROSS REACTION DOWN	HORZ	UPLIFT	INPUT BRG IN-SX	REQRD BRG IN-SX
F	689	0	689	0	0	MECHANICAL	
H	807	0	807	0	0	5-8	1-8

A SUITABLE HANGER/MECHANICAL CONNECTION IS REQUIRED AT JOINT F. MINIMUM BEARING LENGTH AT JOINT F = 1-8.

UNFACTORED REACTIONS

MAX./MIN. COMPONENT REACTIONS

JT	1ST LCASE COMBINED	SNOW	LIVE	PERM.LIVE	WIND	DEAD	SOIL
F	489	310 / 0	0 / 0	0 / 0	0 / 0	179 / 0	0 / 0
H	571	375 / 0	0 / 0	0 / 0	0 / 0	195 / 0	0 / 0

BEARING MATERIAL TO BE SPF NO.2 OR BETTER AT JOINT(S) H

BRACING

TOP CHORD TO BE SHEATHED OR MAX. PURLIN SPACING = 6.25 FT.
MAX. UNBRACED BOTTOM CHORD LENGTH = 10.00 FT OR RIGID CEILING DIRECTLY APPLIED.

ALL PITCH BREAKS AND PERIMETER CORNER JOINTS MUST BE LATERALLY RESTRAINED.

LOADING

TOTAL LOAD CASES: (4)

CHORDS

MEMB. FR-TO	MAX. FACTORED FORCE (LBS)	FACTORED VERT. LOAD LC1 (PLF) FROM	TO	MAX CSI (LC)	MAX. UNBRAC LENGTH
A- B	0 / 42	-84.9	-84.9	0.12 (1)	10.00
B- C	0 / 24	-84.9	-84.9	0.16 (1)	10.00
C- D	-427 / 0	-84.9	-84.9	0.13 (1)	6.25
D- E	-403 / 0	-84.9	-84.9	0.30 (1)	6.25
H- B	-228 / 0	0.0	0.0	0.03 (1)	7.81
F- E	-645 / 0	0.0	0.0	0.08 (1)	7.81
H- G	0 / 366	-18.5	-18.5	0.27 (4)	10.00
G- F	0 / 0	-18.5	-18.5	0.24 (4)	10.00

WEBS

MEMB. FR-TO	MAX. FACTORED FORCE (LBS)	MAX CSI (LC)
C- G	-140 / 0	0.09 (1)
G- D	0 / 182	0.05 (4)
H- C	-644 / 0	0.39 (1)
G- E	0 / 298	0.07 (1)

[M][F]

DESIGN CRITERIA

SPECIFIED LOADS:

TOP CH.	LL	=	23.3	PSF
	DL	=	6.0	PSF
BOT CH.	LL	=	0.0	PSF
	DL	=	7.4	PSF
TOTAL LOAD		=	36.7	PSF

SPACING = 24.0 IN. C/C

THIS TRUSS IS DESIGNED FOR RESIDENTIAL OR SMALL BUILDING REQUIREMENTS OF PART 9, NBCC 2010, NBCC 2015

THIS DESIGN COMPLIES WITH:
- PART 9 OF BCBC 2018 , OBC 2012 , ABC 2019
- CSA 086-09, CSA 086-14
- TPIC 2011, TPIC 2014

(55 % OF 27.2 P.S.F. G.S.L. PLUS 8.4 P.S.F. RAIN LOAD) EQUALS 23.3 P.S.F. SPECIFIED ROOF LIVE LOAD

ALLOWABLE DEFL.(LL)= L/360 (0.44")
CALCULATED VERT. DEFL.(LL) = L/ 999 (0.01")
ALLOWABLE DEFL.(TL)= L/360 (0.44")
CALCULATED VERT. DEFL.(TL) = L/ 999 (0.05")

CSI: TC=0.30/1.00 (D-E:1) , BC=0.27/1.00 (G-H:4) , WB=0.39/1.00 (C-H:1) , SSI=0.15/1.00 (D-E:1)

DOL LUMBER=1.00 NAIL=1.00 LS BEND=1.10 COMP=1.10 SHEAR=1.10 TENS= 1.10

COMPANION LIVE LOAD FACTOR = 1.00

TRUSS PLATE MANUFACTURER IS NOT RESPONSIBLE FOR QUALITY CONTROL IN THE TRUSS MANUFACTURING PLANT .

NAIL VALUES

PLATE	GRIP(DRY) (PSI) MAX	MIN	SHEAR (PLI) MAX	MIN	SECTION (PLI) MAX	MIN
MT20	618	354	1667	788	1987	1656

PLATE PLACEMENT TOL. = 0.250 inches

PLATE ROTATION TOL. = 5.0 Deg.

JSI GRIP= 0.79 (H) (INPUT = 0.90)
JSI METAL= 0.39 (C) (INPUT = 1.00)

JOB NAME	TRUSS NAME	QUANTITY	PLY	JOB DESC.	DRWG NO.
313997	H11T		1	TRUSS DESC. JT-39002	E-19112575

Alpa Roof Truss, Maple

Version 8.300 S Aug 9 2019 MiTek Industries, Inc. Mon Nov 11 13:31:49 2019 Page 1
ID:1djR6DYvLvlIXkyExRWgN1yQawr-c4lf0Nvvftb7VjaPlOAv7DAv9G8TQKCHFXhzjMyKFhe

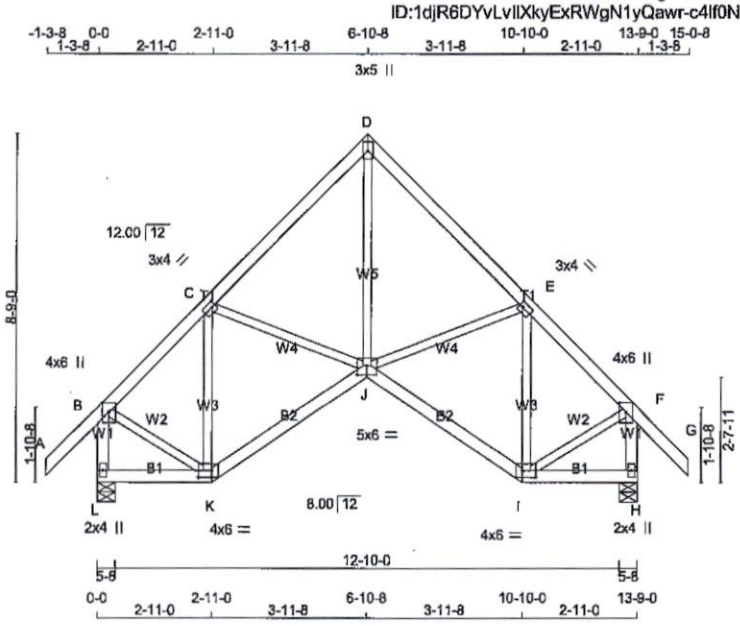

TOTAL WEIGHT = 4 X 71 = 282 lb

LUMBER

N. L. G. A. RULES

CHORDS	SIZE		LUMBER	DESCR.
A - D	2x4	DRY	No.2	SPF
D - G	2x4	DRY	No.2	SPF
L - B	2x4	DRY	No.2	SPF
H - F	2x4	DRY	No.2	SPF
L - K	2x4	DRY	No.2	SPF
K - J	2x4	DRY	No.2	SPF
J - I	2x4	DRY	No.2	SPF
I - H	2x4	DRY	No.2	SPF
ALL WEBS EXCEPT	2x3	DRY	No.2	SPF

DRY: SEASONED LUMBER.

PLATES (table is in inches)

JT	TYPE	PLATES	W	LEN	Y	X
B	TMVW+p	MT20	4.0	6.0	2.75	2.00
C	TMWW-t	MT20	3.0	4.0	1.50	1.00
D	TTW+p	MT20	3.0	6.0		
E	TMWW-t	MT20	3.0	4.0	1.50	1.00
F	TMVW+p	MT20	4.0	6.0	2.75	2.00
H	BMV1+p	MT20	2.0	4.0		
I	BBWW-l	MT20	4.0	6.0	2.00	4.00
J	BBWWW-p	MT20	5.0	6.0	2.75	3.00
K	BBWW-l	MT20	4.0	6.0	2.00	4.00
L	BMV1+p	MT20	2.0	4.0		

NOTE: Lateral brace(s) shown shall be 2x4 SPF #2

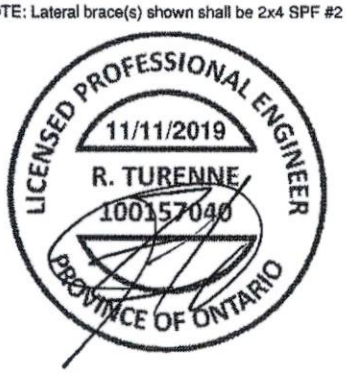

DIMENSIONS, SUPPORTS AND LOADINGS SPECIFIED BY FABRICATOR TO BE VERIFIED BY BUILDING DESIGNER

BEARINGS

JT	FACTORED GROSS REACTION VERT	HORZ	MAXIMUM FACTORED GROSS REACTION DOWN	HORZ	UPLIFT	INPUT BRG IN-SX	REQRD BRG IN-SX
L	829	0	829	0	0	5-8	1-8
H	829	0	829	0	0	5-8	1-8

UNFACTORED REACTIONS

JT	1ST LCASE COMBINED	MAX./MIN. COMPONENT REACTIONS SNOW	LIVE	PERM.LIVE	WIND	DEAD	SOIL
L	586	385 / 0	0 / 0	0 / 0	0 / 0	201 / 0	0 / 0
H	586	385 / 0	0 / 0	0 / 0	0 / 0	201 / 0	0 / 0

BEARING MATERIAL TO BE SPF NO.2 OR BETTER AT JOINT(S) L, H

BRACING

TOP CHORD TO BE SHEATHED OR MAX. PURLIN SPACING = 6.25 FT.
MAX. UNBRACED BOTTOM CHORD LENGTH = 10.00 FT OR RIGID CEILING DIRECTLY APPLIED.

ALL PITCH BREAKS AND PERIMETER CORNER JOINTS MUST BE LATERALLY RESTRAINED.

LOADING

TOTAL LOAD CASES: (4)

CHORDS

MEMB. FR-TO	MAX. FORCE (LBS)	FACTORED VERT. LOAD LC1 (PLF) FROM	TO	MAX CSI (LC)	MAX. UNBRAC LENGTH
A- B	0 / 42	-84.9	-84.9	0.12 (1)	10.00
B- C	-536 / 0	-84.9	-84.9	0.14 (1)	6.25
C- D	-625 / 0	-84.9	-84.9	0.16 (1)	6.25
D- E	-625 / 0	-84.9	-84.9	0.16 (1)	6.25
E- F	-536 / 0	-84.9	-84.9	0.14 (1)	6.25
F- G	0 / 42	-84.9	-84.9	0.12 (1)	10.00
L- B	-802 / 0	0.0	0.0	0.09 (1)	7.81
H- F	-802 / 0	0.0	0.0	0.09 (1)	7.81
L- K	0 / 0	-18.5	-18.5	0.05 (4)	10.00
K- J	0 / 473	-18.5	-18.5	0.13 (4)	10.00
J- I	0 / 473	-18.5	-18.5	0.13 (4)	10.00
I- H	0 / 0	-18.5	-18.5	0.05 (4)	10.00

WEBS

MEMB. FR-TO	MAX. FORCE (LBS)	MAX CSI (LC)
J- D	0 / 572	0.13 (1)
J- E	0 / 37	0.01 (1)
I- E	-408 / 0	0.13 (1)
C- J	0 / 37	0.01 (1)
K- C	-408 / 0	0.13 (1)
B- K	0 / 453	0.10 (1)
I- F	0 / 453	0.10 (1)

[M][F]

DESIGN CRITERIA

SPECIFIED LOADS:

TOP CH.	LL	=	23.3	PSF
	DL	=	6.0	PSF
BOT CH.	LL	=	0.0	PSF
	DL	=	7.4	PSF
TOTAL LOAD		=	36.7	PSF

SPACING = 24.0 IN. C/C

THIS TRUSS IS DESIGNED FOR RESIDENTIAL OR SMALL BUILDING REQUIREMENTS OF PART 9, NBCC 2010, NBCC 2015

THIS DESIGN COMPLIES WITH:
- PART 9 OF BCBC 2018 , OBC 2012 , ABC 2019
- CSA 086-09, CSA 086-14
- TPIC 2011, TPIC 2014

(55 % OF 27.2 P.S.F. G.S.L. PLUS 8.4 P.S.F. RAIN LOAD) EQUALS 23.3 P.S.F. SPECIFIED ROOF LIVE LOAD

ALLOWABLE DEFL.(LL)= L/360 (0.46")
CALCULATED VERT. DEFL.(LL) = L/ 999 (0.01")
ALLOWABLE DEFL.(TL)= L/360 (0.46")
CALCULATED VERT. DEFL.(TL) = L/ 999 (0.04")

CSI: TC=0.16/1.00 (C-D:1) , BC=0.13/1.00 (J-K:4) , WB=0.13/1.00 (E-I:1) , SSI=0.11/1.00 (C-D:1)

DOL LUMBER=1.00 NAIL=1.00 LS BEND=1.10 COMP=1.10 SHEAR=1.10 TENS= 1.10

COMPANION LIVE LOAD FACTOR = 1.00

TRUSS PLATE MANUFACTURER IS NOT RESPONSIBLE FOR QUALITY CONTROL IN THE TRUSS MANUFACTURING PLANT .

NAIL VALUES

PLATE	GRIP(DRY) (PSI) MAX	MIN	SHEAR (PLI) MAX	MIN	SECTION (PLI) MAX	MIN
MT20	618	354	1667	788	1987	1656

PLATE PLACEMENT TOL. = 0.250 inches

PLATE ROTATION TOL. = 5.0 Deg.

JSI GRIP= 0.75 (I) (INPUT = 0.90)
JSI METAL= 0.26 (B) (INPUT = 1.00)

JOB NAME	TRUSS NAME	QUANTITY	PLY	JOB DESC.	DRWG NO.
313997	H11TG		1	TRUSS DESC. JT-39002	E-19112576

Alpa Roof Truss, Maple

Version 8.300 S Aug 9 2019 MiTek Industries, Inc. Mon Nov 11 13:31:53 2019 Page 1
ID:1djR6DYvLvlIXkyExRWgN1yQawr-Ur?AskyPj55Z_LuA_EFrH3LbkuV?M8ssA8fAs7yKFha

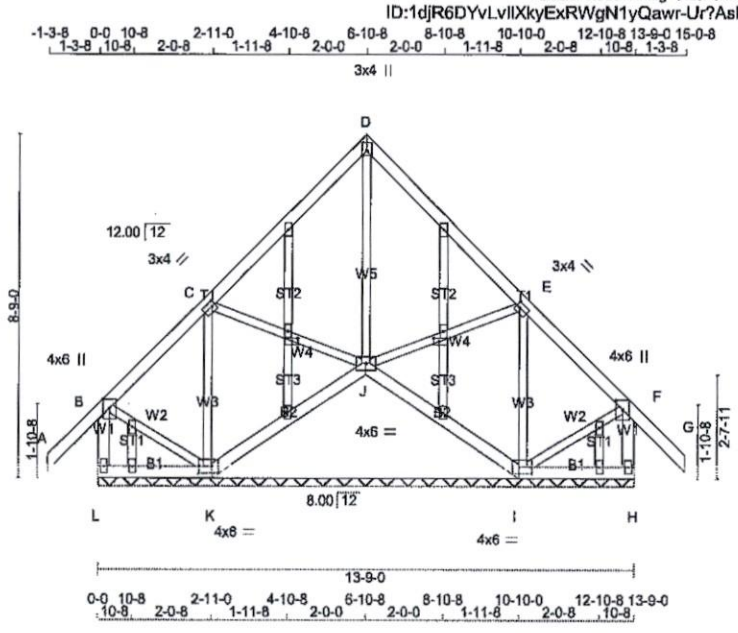

TOTAL WEIGHT = 2 X 80 = 160 lb [M]

LUMBER

N. L. G. A. RULES

CHORDS	SIZE		LUMBER	DESCR.
A - D	2x4	DRY	No.2	SPF
D - G	2x4	DRY	No.2	SPF
L - B	2x4	DRY	No.2	SPF
H - F	2x4	DRY	No.2	SPF
L - K	2x4	DRY	No.2	SPF
K - J	2x4	DRY	No.2	SPF
J - I	2x4	DRY	No.2	SPF
I - H	2x4	DRY	No.2	SPF

ALL WEBS 2x3 DRY No.2 SPF
EXCEPT

ALL GABLE WEBS
2x3 DRY No.2 SPF
DRY: SEASONED LUMBER.

GABLE STUDS SPACED AT 2-0-0 OC.

PLATES (table is in inches)

JT	TYPE	PLATES	W	LEN	Y	X
B	TMVW+p	MT20	4.0	6.0	2.75	2.00
C	TMWW-t	MT20	3.0	4.0	1.50	1.00
D	TTW+p	MT20	3.0	4.0	Edge	
E	TMWW-t	MT20	3.0	4.0	1.50	1.00
F	TMVW+p	MT20	4.0	6.0	2.75	2.00
H	BMV1+p	MT20	2.0	4.0		
I	BBWW1-l	MT20	4.0	6.0	2.00	4.00
J	BBWWW1-p	MT20	4.0	6.0		
K	BBWW1-l	MT20	4.0	6.0	2.00	4.00
L	BMV1+p	MT20	2.0	4.0		
M	NP-p	MT20	2.0	4.0	1.00	1.75
M, N, O, P, Q, R, S, T, U, V						
M	NP+w	MT20	2.0	4.0		
T	NP-p	MT20	2.0	4.0	1.00	1.75

Edge - INDICATES REFERENCE CORNER OF PLATE TOUCHES EDGE OF CHORD.

NOTE: Lateral brace(s) shown shall be 2x4 SPF #2

LICENSED PROFESSIONAL ENGINEER
11/11/2019
R. TURENNE
100157040
PROVINCE OF ONTARIO

DIMENSIONS, SUPPORTS AND LOADINGS SPECIFIED BY FABRICATOR TO BE VERIFIED BY BUILDING DESIGNER

BEARINGS

JT	FACTORED GROSS REACTION VERT	HORZ	MAXIMUM FACTORED GROSS REACTION DOWN	HORZ	UPLIFT	INPUT BRG IN-SX	REQRD BRG IN-SX
L	325	0	325	0	0	13-9-0 (6-10-8)	2-1
K	263	0	263	0	0	13-9-0 (6-10-8)	2-1
J	482	0	482	0	0	13-9-0 (6-10-8)	2-1
I	263	0	263	0	0	13-9-0 (6-10-8)	2-1
H	325	0	325	0	0	13-9-0 (6-10-8)	2-1

VALUE IN PARENTHESIS INDICATES EFFECTIVE BEARING LENGTH

BEVELED PLATE OR SHIM REQUIRED TO PROVIDE FULL BEARING SURFACE WITH TRUSS CHORD AT JT(S): J

UNFACTORED REACTIONS

JT	1ST LCASE COMBINED	MAX./MIN. COMPONENT REACTIONS SNOW	LIVE	PERM.LIVE	WIND	DEAD	SOIL
L	227	164 / 0	0 / 0	0 / 0	0 / 0	64 / 0	0 / 0
K	188	109 / 0	0 / 0	0 / 0	0 / 0	79 / 0	0 / 0
J	341	225 / 0	0 / 0	0 / 0	0 / 0	116 / 0	0 / 0
I	188	109 / 0	0 / 0	0 / 0	0 / 0	79 / 0	0 / 0
H	227	164 / 0	0 / 0	0 / 0	0 / 0	64 / 0	0 / 0

BEARING MATERIAL TO BE SPF NO.2 OR BETTER AT JOINT(S) L, K, J, I, H

BRACING

TOP CHORD TO BE SHEATHED OR MAX. PURLIN SPACING = 6.25 FT.
MAX. UNBRACED BOTTOM CHORD LENGTH = 10.00 FT OR RIGID CEILING DIRECTLY APPLIED.

ALL PITCH BREAKS AND PERIMETER CORNER JOINTS MUST BE LATERALLY RESTRAINED.

LOADING

TOTAL LOAD CASES: (4)

CHORDS

MEMB. FR-TO	MAX. FACTORED FORCE (LBS)	FACTORED VERT. LOAD LC1 (PLF) FROM	TO	MAX CSI (LC)	MAX. UNBRAC LENGTH
A- B	0 / 42	-84.9	-84.9	0.12 (1)	10.00
B- C	-67 / 0	-84.9	-84.9	0.19 (1)	6.25
C- D	-29 / 0	-84.9	-84.9	0.19 (1)	6.25
D- E	-29 / 0	-84.9	-84.9	0.19 (1)	6.25
E- F	-67 / 0	-84.9	-84.9	0.19 (1)	6.25
F- G	0 / 42	-84.9	-84.9	0.12 (1)	10.00
L- B	-298 / 0	0.0	0.0	0.03 (1)	7.81
H- F	-298 / 0	0.0	0.0	0.03 (1)	7.81
L- K	0 / 0	-18.5	-18.5	0.05 (4)	10.00
K- J	0 / 79	-18.5	-18.5	0.09 (4)	10.00
J- I	0 / 79	-18.5	-18.5	0.09 (4)	10.00
I- H	0 / 0	-18.5	-18.5	0.05 (4)	10.00

WEBS

MEMB. FR-TO	MAX. FACTORED FORCE (LBS)	MAX CSI (LC)
J- D	-271 / 0	0.15 (1)
J- E	-67 / 0	0.02 (1)
I- E	-280 / 0	0.09 (1)
C- J	-67 / 0	0.02 (1)
K- C	-280 / 0	0.09 (1)
B- K	0 / 81	0.02 (1)
I- F	0 / 81	0.02 (1)

DESIGN CRITERIA

SPECIFIED LOADS:

TOP CH.	LL =	23.3	PSF
	DL =	6.0	PSF
BOT CH.	LL =	0.0	PSF
	DL =	7.4	PSF
TOTAL LOAD	=	36.7	PSF

SPACING = 24.0 IN. C/C

THIS TRUSS IS DESIGNED FOR RESIDENTIAL OR SMALL BUILDING REQUIREMENTS OF PART 9, NBCC 2010, NBCC 2015

THIS DESIGN COMPLIES WITH:
- PART 9 OF BCBC 2018 , OBC 2012 , ABC 2019
- CSA 086-09, CSA 086-14
- TPIC 2011, TPIC 2014

(55 % OF 27.2 P.S.F. G.S.L. PLUS 8.4 P.S.F. RAIN LOAD) EQUALS 23.3 P.S.F. SPECIFIED ROOF LIVE LOAD

CSI: TC=0.19/1.00 (B-C:1) , BC=0.09/1.00 (J-K:4) , WB=0.15/1.00 (D-J:1) , SSI=0.11/1.00 (C-D:1)

DOL LUMBER=1.00 NAIL=1.00 LS BEND=1.10 COMP=1.10 SHEAR=1.10 TENS= 1.10

COMPANION LIVE LOAD FACTOR = 1.00

TRUSS PLATE MANUFACTURER IS NOT RESPONSIBLE FOR QUALITY CONTROL IN THE TRUSS MANUFACTURING PLANT .

NAIL VALUES

PLATE	GRIP(DRY) (PSI) MAX	MIN	SHEAR (PLI) MAX	MIN	SECTION (PLI) MAX	MIN
MT20	618	354	1667	788	1987	1656

PLATE PLACEMENT TOL. = 0.250 Inches

PLATE ROTATION TOL. = 5.0 Deg.

JSI GRIP= 0.43 (D) (INPUT = 0.90)
JSI METAL= 0.17 (J) (INPUT = 1.00)

JOB NAME	TRUSS NAME	QUANTITY	PLY	JOB DESC.	DRWG NO.
313997	H15G	:	1	TRUSS DESC. JT-39002	E-19112577

Alpa Roof Truss, Maple

Version 8.300 S Aug 9 2019 MiTek Industries, Inc. Mon Nov 11 13:31:13 2019 Page 1

ID:1djR6DYvLvIlXkyExRWgN1yQawr-f9a2T3TK8p2EBBqUeqXTfdhn_mtX_1u_zwz3SSyKFIC

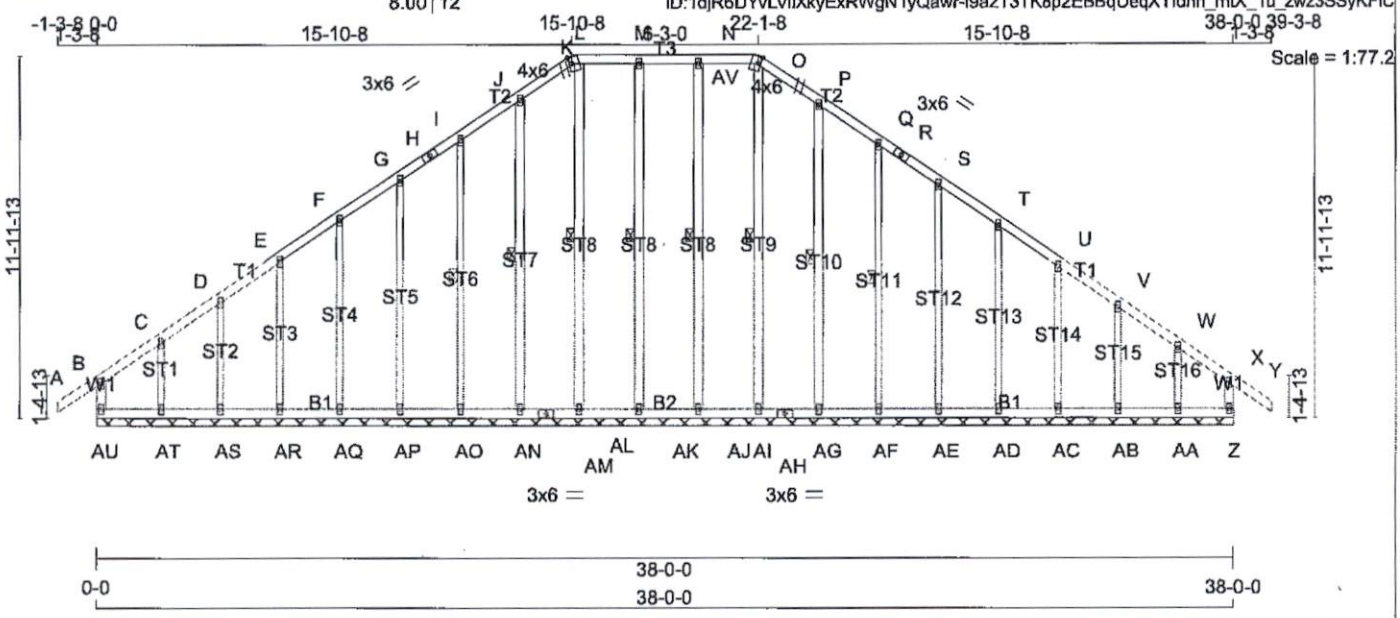

TOTAL WEIGHT = 2 X 229 = 458 lb

[M]

LUMBER

N. L. G. A. RULES

CHORDS	SIZE		LUMBER	DESCR.
AU- B	2x4	DRY	No.2	SPF
A - H	2x4	DRY	No.2	SPF
H - K	2x4	DRY	No.2	SPF
K - O	2x4	DRY	No.2	SPF
O - R	2x4	DRY	No.2	SPF
R - Y	2x4	DRY	No.2	SPF
Z - X	2x4	DRY	No.2	SPF
AU- AM	2x4	DRY	No.2	SPF
AM- AH	2x4	DRY	No.2	SPF
AH- Z	2x4	DRY	No.2	SPF
ALL WEBS	2x3	DRY	No.2	SPF
EXCEPT				
AI - O	2x4	DRY	No.2	SPF
AJ - N	2x4	DRY	No.2	SPF
AK- M	2x4	DRY	No.2	SPF
AL- L	2x4	DRY	No.2	SPF
AN- J	2x4	DRY	No.2	SPF
AG- P	2x4	DRY	No.2	SPF
ALL GABLE WEBS				
	2x3	DRY	No.2	SPF
EXCEPT				
ST1	2x4	DRY	No.2	SPF
ST2	2x4	DRY	No.2	SPF
ST3	2x4	DRY	No.2	SPF
ST4	2x4	DRY	No.2	SPF
ST5	2x4	DRY	No.2	SPF
ST12	2x4	DRY	No.2	SPF

DRY: SEASONED LUMBER.

GABLE STUDS SPACED AT 2-0-0 OC.

PLATES (table is in inches)

JT	TYPE	PLATES	W	LEN	Y	X
B	TMV+p	MT20	2.0	4.0		
C, D, E, F, G, I, J, M, N, P, Q, S, T, U, V, W						
C	TMW+w	MT20	2.0	4.0		
H	TS-t	MT20	3.0	6.0		
K						
K	TTW+m	MT20	4.0	6.0	Edge 1.00	

NOTE: Lateral brace(s) shown shall be 2x4 SPF #2

LICENSED PROFESSIONAL ENGINEER
11/11/2019
R. TURENNE
100157040
PROVINCE OF ONTARIO

DIMENSIONS, SUPPORTS AND LOADINGS SPECIFIED BY FABRICATOR TO BE VERIFIED BY BUILDING DESIGNER

BEARINGS

THIS TRUSS DESIGNED FOR CONTINUOUS BEARINGS.

THIS TRUSS REQUIRES RIGID SHEATHING ON EXPOSED FACE.

BEARING MATERIAL TO BE SPF NO.2 OR BETTER AT JOINT(S)

BRACING

FOR SECTION K-O, MAX. PURLIN SPACING = 2.00 FT.
FOR OTHER SECTIONS, TOP CHORD TO BE SHEATHED OR MAX. PURLIN SPACING = 6.25 FT.
MAX. UNBRACED BOTTOM CHORD LENGTH = 10.00 FT OR RIGID CEILING DIRECTLY APPLIED.

ALL PITCH BREAKS AND PERIMETER CORNER JOINTS MUST BE LATERALLY RESTRAINED.

1 LATERAL BRACE(S) AT 1/ 2 LENGTH OF O-AI, N-AJ, M-AK, L-AL, J-AN, I-AO, P-AG, Q-AF.

END VERTICAL(S) MUST BE SHEATHED OR HAVE BRACES AS INDICATED IN THE MAX. UNBRACED LENGTH COLUMN OF THE TABLE BELOW

LOADING

TOTAL LOAD CASES: (4)

CHORDS

MEMB. FR-TO	MAX. FACTORED FORCE (LBS)	FACTORED VERT. LOAD LC1 (PLF) FROM	TO	MAX CSI (LC)	MAX. UNBRAC LENGTH
AU- B	-210 / 0	0.0	0.0	0.01 (4)	7.81
A- B	0 / 32	-84.9	-84.9	0.11 (1)	10.00
B- C	-11 / 0	-84.9	-84.9	0.04 (1)	6.25
C- D	-4 / 0	-84.9	-84.9	0.04 (1)	10.00
D- E	-3 / 0	-84.9	-84.9	0.04 (1)	10.00
E- F	-2 / 4	-84.9	-84.9	0.04 (1)	10.00
F- G	-2 / 6	-84.9	-84.9	0.04 (1)	10.00
G- H	-1 / 8	-84.9	-84.9	0.04 (1)	10.00
H- I	-1 / 8	-84.9	-84.9	0.04 (1)	10.00
I- J	0 / 12	-84.9	-84.9	0.05 (1)	10.00
J- K	-2 / 5	-84.9	-84.9	0.04 (1)	10.00
K- L	0 / 15	-92.4	-92.4	0.04 (1)	2.00
L- M	0 / 10	-92.4	-92.4	0.04 (1)	2.00
M-AV	0 / 10	-92.4	-92.4	0.04 (1)	2.00
AV- N	0 / 10	-92.4	-92.4	0.04 (1)	2.00
N- O	0 / 10	-92.4	-92.4	0.04 (1)	2.00
O- P	0 / 11	-84.9	-84.9	0.04 (1)	10.00
P- Q	0 / 12	-84.9	-84.9	0.04 (1)	10.00
Q- R	-1 / 8	-84.9	-84.9	0.04 (1)	10.00
R- S	-1 / 8	-84.9	-84.9	0.04 (1)	10.00
S- T	-2 / 6	-84.9	-84.9	0.04 (1)	10.00
T- U	-2 / 4	-84.9	-84.9	0.04 (1)	10.00
U- V	-3 / 0	-84.9	-84.9	0.04 (1)	10.00
V- W	-3 / 0	-84.9	-84.9	0.04 (1)	10.00
W- X	-26 / 0	-84.9	-84.9	0.09 (1)	6.25
X- Y	0 / 32	-84.9	-84.9	0.11 (1)	10.00
Z- X	-227 / 0	0.0	0.0	0.03 (1)	7.81
AU-AT	0 / 9	-18.5	-18.5	0.02 (4)	10.00
AT-AS	0 / 3	-18.5	-18.5	0.02 (4)	10.00
AS-AR	0 / 2	-18.5	-18.5	0.02 (4)	10.00
AR-AQ	-3 / 2	-18.5	-18.5	0.02 (4)	10.00
AQ-AP	-5 / 1	-18.5	-18.5	0.01 (4)	10.00
AP-AO	-7 / 1	-18.5	-18.5	0.01 (4)	10.00
AO-AN	-8 / 0	-18.5	-18.5	0.01 (4)	10.00
AN-AM	-10 / 0	-18.5	-18.5	0.01 (4)	10.00
AM-AL	-10 / 0	-18.5	-18.5	0.01 (4)	10.00
AL-AK	-10 / 0	-18.5	-18.5	0.01 (4)	10.00
AK-AJ	-10 / 0	-18.5	-18.5	0.01 (4)	10.00
AJ-AI	-10 / 0	-18.5	-18.5	0.01 (4)	10.00
AI-AH	-10 / 0	-18.5	-18.5	0.01 (4)	10.00

WEBS

MEMB. FR-TO	MAX. FACTORED FORCE (LBS)	MAX CSI (LC)
AI- O	-186 / 0	0.15 (1)
AJ- N	-186 / 0	0.15 (1)
AK- M	-185 / 0	0.14 (1)
AL- L	-188 / 0	0.15 (1)
AN- J	-176 / 0	0.11 (1)
AO- I	-165 / 0	0.10 (1)
AP- G	-170 / 0	0.22 (1)
AQ- F	-168 / 0	0.13 (1)
AR- E	-168 / 0	0.08 (1)
AS- D	-167 / 0	0.04 (1)
AT- C	-167 / 0	0.03 (1)
AG- P	-176 / 0	0.10 (1)
AF- Q	-165 / 0	0.09 (1)
AE- S	-170 / 0	0.21 (1)
AD- T	-168 / 0	0.12 (1)
AC- U	-166 / 0	0.07 (1)
AB- V	-177 / 0	0.04 (1)
AA- W	-121 / 0	0.02 (1)

DESIGN CRITERIA

SPECIFIED LOADS:

TOP CH.	LL	=	23.3	PSF
	DL	=	6.0	PSF
BOT CH.	LL	=	0.0	PSF
	DL	=	7.4	PSF
TOTAL LOAD		=	36.7	PSF

SPACING = 24.0 IN. C/C

LOADING IN FLAT SECTION BASED ON PIGGYBACK TRUSS WITH SLOPES OF 6.00/12 AND -6.00/12 AND RESPECTIVE WALL HEIGHTS OF 0-0 AND 0-0 AND AN ADDITIONAL DEAD LOAD OF 3.0 P.S.F.

THIS TRUSS IS DESIGNED FOR RESIDENTIAL OR SMALL BUILDING REQUIREMENTS OF PART 9, NBCC 2010, NBCC 2015

THIS DESIGN COMPLIES WITH:
- PART 9 OF BCBC 2018 , OBC 2012 , ABC 2019
- CSA 086-09, CSA 086-14
- TPIC 2011, TPIC 2014

DESIGN ASSUMPTIONS
-OVERHANG NOT TO BE ALTERED OR CUT OFF.

(55 % OF 27.2 P.S.F. G.S.L. PLUS 8.4 P.S.F. RAIN LOAD) EQUALS 23.3 P.S.F. SPECIFIED ROOF LIVE LOAD

CSI: TC=0.11/1.00 (X-Y:1) , BC=0.03/1.00 (Z-AA:1) , WB=0.22/1.00 (G-AP:1) , SSI=0.08/1.00 (X-Y:1)

DOL LUMBER=1.00 NAIL=1.00 LS BEND=1.10 COMP=1.10 SHEAR=1.10 TENS= 1.10

COMPANION LIVE LOAD FACTOR = 1.00

TRUSS PLATE MANUFACTURER IS NOT RESPONSIBLE FOR QUALITY CONTROL IN THE TRUSS MANUFACTURING PLANT .

NAIL VALUES

PLATE	GRIP(DRY) (PSI) MAX	MIN	SHEAR (PLI) MAX	MIN	SECTION (PLI) MAX	MIN
MT20	618	354	1667	788	1987	1656

PLATE PLACEMENT TOL. = 0.250 Inches

PLATE ROTATION TOL. = 5.0 Deg.

JSI GRIP= 0.56 (K) (INPUT = 0.90)
JSI METAL= 0.12 (X) (INPUT = 1.00)

CONTINUED ON PAGE 2

JOB NAME	TRUSS NAME	QUANTITY	PLY	JOB DESC.	DRWG NO.
313997	H16P	1	1	TRUSS DESC. JT-39002	E-19112578

Alpa Roof Truss, Maple

Version 8.300 S Aug 9 2019 MiTek Industries, Inc. Mon Nov 11 13:29:58 2019 Page 1
ID:1djR6DYvLvlIXkyExRWgN1yQawr-MjYhjQZHorncthgb4laht7p4zuXHvv9WxjllbJlyKFjN

Scale = 1:16.5

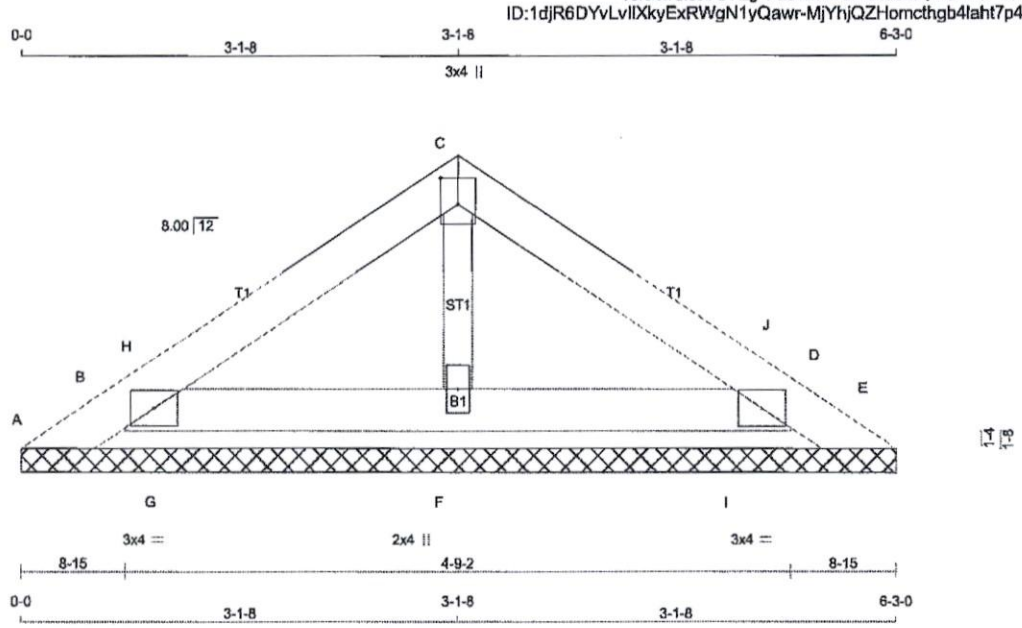

TOTAL WEIGHT = 2 X 15 = 30 lb

[M]

LUMBER
N. L. G. A. RULES

CHORDS	SIZE		LUMBER	DESCR.
A - C	2x4	DRY	No.2	SPF
C - E	2x4	DRY	No.2	SPF
B - D	2x4	DRY	No.2	SPF
ALL WEBS	2x3	DRY	No.2	SPF
ALL GABLE WEBS	2x3	DRY	No.2	SPF

DRY: SEASONED LUMBER.

GABLE STUDS SPACED AT 2-0-0 OC.

PLATES (table is in inches)

JT	TYPE	PLATES	W	LEN	Y	X
B	TMB1-I	MT20	3.0	4.0		
C	TTW+p	MT20	3.0	4.0	2.25	1.50
D	TMB1-I	MT20	3.0	4.0		
F	BMW1+w	MT20	2.0	4.0		

NOTE: Lateral brace(s) shown shall be 2x4 SPF #2

LICENSED PROFESSIONAL ENGINEER
11/11/2019
R. TURENNE
100157040
PROVINCE OF ONTARIO

DIMENSIONS, SUPPORTS AND LOADINGS SPECIFIED BY FABRICATOR TO BE VERIFIED BY BUILDING DESIGNER

BEARINGS

THIS TRUSS DESIGNED FOR CONTINUOUS BEARINGS.

THIS TRUSS REQUIRES RIGID SHEATHING ON EXPOSED FACE.

BEVELED PLATE OR SHIM REQUIRED TO PROVIDE FULL BEARING SURFACE WITH TRUSS CHORD AT JT(S): F

PROVIDE ANCHORAGE AT BEARING JOINT A FOR 150 LBS FACTORED UPLIFT
PROVIDE ANCHORAGE AT BEARING JOINT E FOR 150 LBS FACTORED UPLIFT
BEARING MATERIAL TO BE SPF NO.2 OR BETTER AT JOINT(S)

BRACING
TOP CHORD TO BE SHEATHED OR MAX. PURLIN SPACING = 6.25 FT.
MAX. UNBRACED BOTTOM CHORD LENGTH = 10.00 FT OR RIGID CEILING DIRECTLY APPLIED.

ALL PITCH BREAKS AND PERIMETER CORNER JOINTS MUST BE LATERALLY RESTRAINED.

LOADING
TOTAL LOAD CASES: (4)

CHORDS

MEMB. FR-TO	MAX. FACTORED FORCE (LBS)	FACTORED VERT. LOAD LC1 (PLF) FROM	TO	MAX CSI (LC)	MAX. UNBRAC LENGTH
A- B	0 / 27	-103.4	-103.4	0.05 (1)	10.00
B- H	-71 / 0	-84.9	-84.9	0.05 (1)	6.25
H- C	-48 / 0	-84.9	-84.9	0.05 (1)	6.25
C- J	-48 / 0	-84.9	-84.9	0.05 (1)	6.25
J- D	-71 / 0	-84.9	-84.9	0.05 (1)	6.25
D- E	0 / 27	-103.4	-103.4	0.05 (1)	10.00
B- G	0 / 35	-18.5	-18.5	0.03 (1)	10.00
G- F	0 / 35	-18.5	-18.5	0.04 (1)	10.00
F- I	0 / 35	-18.5	-18.5	0.04 (1)	10.00
I- D	0 / 35	-18.5	-18.5	0.03 (1)	10.00

WEBS

MEMB. FR-TO	MAX. FACTORED FORCE (LBS)	MAX CSI (LC)
F- C	-108 / 0	0.02 (1)
G- H	-66 / 10	0.00 (1)
I- J	-66 / 10	0.00 (1)

DESIGN CRITERIA

SPECIFIED LOADS:

TOP CH.	LL =	23.3	PSF
	DL =	6.0	PSF
BOT CH.	LL =	0.0	PSF
	DL =	7.4	PSF
TOTAL LOAD	=	36.7	PSF

SPACING = 24.0 IN. C/C

THIS TRUSS IS DESIGNED FOR RESIDENTIAL OR SMALL BUILDING REQUIREMENTS OF PART 9, NBCC 2010, NBCC 2015

THIS DESIGN COMPLIES WITH:
- PART 9 OF BCBC 2018 , OBC 2012 , ABC 2019
- CSA 086-09, CSA 086-14
- TPIC 2011, TPIC 2014

(55 % OF 27.2 P.S.F. G.S.L. PLUS 8.4 P.S.F. RAIN LOAD) EQUALS 23.3 P.S.F. SPECIFIED ROOF LIVE LOAD

CSI: TC=0.05/1.00 (D-E:1) , BC=0.04/1.00 (F-G:1) , WB=0.02/1.00 (C-F:1) , SSI=0.06/1.00 (C-J:1)

DOL LUMBER=1.00 NAIL=1.00 LS BEND=1.10 COMP=1.10 SHEAR=1.10 TENS= 1.10

COMPANION LIVE LOAD FACTOR = 1.00

TRUSS PLATE MANUFACTURER IS NOT RESPONSIBLE FOR QUALITY CONTROL IN THE TRUSS MANUFACTURING PLANT .

NAIL VALUES

PLATE	GRIP(DRY) (PSI) MAX	MIN	SHEAR (PLI) MAX	MIN	SECTION (PLI) MAX	MIN
MT20	618	354	1667	788	1987	1656

PLATE PLACEMENT TOL. = 0.250 inches

PLATE ROTATION TOL. = 5.0 Deg.

JSI GRIP= 0.19 (B) (INPUT = 0.90)
JSI METAL= 0.04 (B) (INPUT = 1.00)

JOB NAME	TRUSS NAME	QUANTITY	PLY	JOB DESC.		DRWG NO.
313997	P01	1	1	TRUSS DESC.	JT-39002	E-19112579

Alpa Roof Truss, Maple

Version 8.300 S Aug 9 2019 MiTek Industries, Inc. Mon Nov 11 14:01:17 2019 Page 1
ID:1djR6DYvLvlIXkyExRWgN1yQawr-qCa15vJvI5LGcQkCKluWn2P?szWTfzwWobyXnuyKFG0

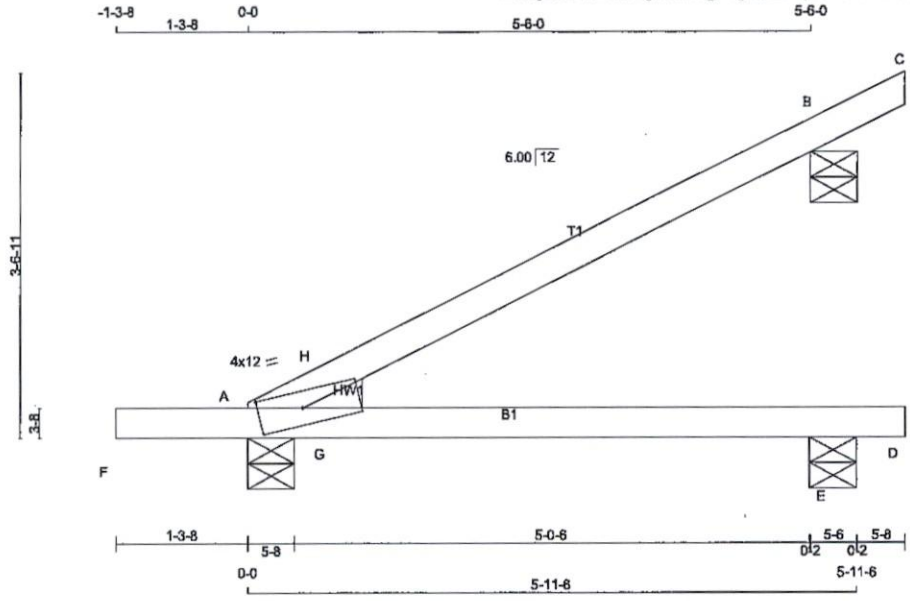

TOTAL WEIGHT = 6 X 18 = 106 lb

[M][F]

LUMBER
N. L. G. A. RULES

CHORDS	SIZE		LUMBER	DESCR.
A - C	2x4	DRY	No.2	SPF
F - D	2x4	DRY	No.2	SPF

DRY: SEASONED LUMBER.

PLATES (table is in inches)

JT	TYPE	PLATES	W	LEN	Y	X
A	TBMH1-m	MT20	4.0	12.0	2.00	5.25

NOTE: Lateral brace(s) shown shall be 2x4 SPF #2

DIMENSIONS, SUPPORTS AND LOADINGS SPECIFIED BY FABRICATOR TO BE VERIFIED BY BUILDING DESIGNER

BEARINGS

JT	FACTORED GROSS REACTION VERT	HORZ	MAXIMUM FACTORED GROSS REACTION DOWN	HORZ	UPLIFT	INPUT BRG IN-SX	REQRD BRG IN-SX	HEEL WEDGE
A	424	0	424	0	0	5-8	1-8	2x4 L
E	102	0	102	0	0	5-8	1-8	
B	276	0	276	0	0	5-8	5-8	

BEVELED PLATE OR SHIM REQUIRED TO PROVIDE FULL BEARING SURFACE WITH TRUSS CHORD AT JT(S): B

UNFACTORED REACTIONS

JT	1ST LCASE COMBINED	MAX./MIN. COMPONENT REACTIONS SNOW	LIVE	PERM.LIVE	WIND	DEAD	SOIL
A	301	191 / 0	0 / 0	0 / 0	0 / 0	110 / 0	0 / 0
E	77	24 / 0	0 / 0	0 / 0	0 / 0	53 / 0	0 / 0
B	192	147 / 0	0 / 0	0 / 0	0 / 0	45 / 0	0 / 0

BEARING MATERIAL TO BE SPF NO.2 OR BETTER AT JOINT(S) A, E, B

BRACING
TOP CHORD TO BE SHEATHED OR MAX. PURLIN SPACING = 6.25 FT.
MAX. UNBRACED BOTTOM CHORD LENGTH = 10.00 FT OR RIGID CEILING DIRECTLY APPLIED.

ALL PITCH BREAKS AND PERIMETER CORNER JOINTS MUST BE LATERALLY RESTRAINED.

LOADING
TOTAL LOAD CASES: (4)

CHORDS

MEMB. FR-TO	MAX. FACTORED FORCE (LBS)	FACTORED VERT. LOAD LC1 (PLF) FROM	TO	MAX CSI (LC)	MAX. UNBRAC LENGTH
A- H	-20 / 0	-84.9	-84.9	0.07 (4)	6.25
H- B	0 / 4	-84.9	-84.9	0.36 (1)	10.00
B- C	-14 / 0	-84.9	-84.9	0.03 (1)	6.25
F- A	0 / 0	-103.4	-103.4	0.10 (1)	10.00
A- G	0 / 0	-18.5	-18.5	0.29 (1)	10.00
G- E	0 / 0	-18.5	-18.5	0.29 (1)	10.00
E- D	0 / 0	-18.5	-18.5	0.01 (4)	10.00

WEBS

MEMB. FR-TO	MAX. FACTORED FORCE (LBS)	MAX CSI (LC)
G- H	-224 / 5	0.00 (1)

DESIGN CRITERIA

SPECIFIED LOADS:

TOP CH.	LL	=	23.3	PSF
	DL	=	6.0	PSF
BOT CH.	LL	=	0.0	PSF
	DL	=	7.4	PSF
TOTAL LOAD		=	36.7	PSF

SPACING = 24.0 IN. C/C

THIS TRUSS IS DESIGNED FOR RESIDENTIAL OR SMALL BUILDING REQUIREMENTS OF PART 9, NBCC 2010, NBCC 2015

THIS DESIGN COMPLIES WITH:
- PART 9 OF BCBC 2018 , OBC 2012 , ABC 2019
- CSA 086-09, CSA 086-14
- TPIC 2011, TPIC 2014

(55 % OF 27.2 P.S.F. G.S.L. PLUS 8.4 P.S.F. RAIN LOAD) EQUALS 23.3 P.S.F. SPECIFIED ROOF LIVE LOAD

ALLOWABLE DEFL.(LL)= L/360 (0.19")
CALCULATED VERT. DEFL.(LL) = L/ 999 (0.07")
ALLOWABLE DEFL.(TL)= L/360 (0.19")
CALCULATED VERT. DEFL.(TL) = L/ 493 (0.14")

CANTILEVER DEFLECTION:
ALLOWABLE DEFL.(LL)= L/120 (0.19")
CALCULATED VERT. DEFL.(LL) = L/ 999 (0.00")
ALLOWABLE DEFL.(TL)= L/120 (0.19")
CALCULATED VERT. DEFL.(TL) = L/ 999 (0.01")

CSI: TC=0.36/1.00 (B-H:1) , BC=0.29/1.00 (E-G:1) , WB=0.00/1.00 (G-H:1) , SSI=0.19/1.00 (A-G:1)

DOL LUMBER=1.00 NAIL=1.00 LS BEND=1.10 COMP=1.10 SHEAR=1.10 TENS= 1.10

COMPANION LIVE LOAD FACTOR = 1.00

TRUSS PLATE MANUFACTURER IS NOT RESPONSIBLE FOR QUALITY CONTROL IN THE TRUSS MANUFACTURING PLANT .

NAIL VALUES

PLATE	GRIP(DRY) (PSI) MAX	MIN	SHEAR (PLI) MAX	MIN	SECTION (PLI) MAX	MIN
MT20	618	354	1667	788	1987	1656

PLATE PLACEMENT TOL. = 0.250 inches

PLATE ROTATION TOL. = 5.0 Deg.

JSI GRIP= 0.04 (A) (INPUT = 0.90)
JSI METAL= 0.01 (A) (INPUT = 1.00)

JOB NAME	TRUSS NAME	QUANTITY	PLY	JOB DESC.		DRWG NO.
313997	G01	1	1	TRUSS DESC.	JT-39002	E-19112580

Alpa Roof Truss, Maple

Version 8.300 S Aug 9 2019 MiTek Industries, Inc. Mon Nov 11 13:32:59 2019 Page 1
ID:1djR6DYvLvlIXkyExRWgN1yQawr-YY_6jJlpANPBuUwss5RKy_4u2U1Yp0ZaLQegAlyKFgY

Scale = 1:16.8

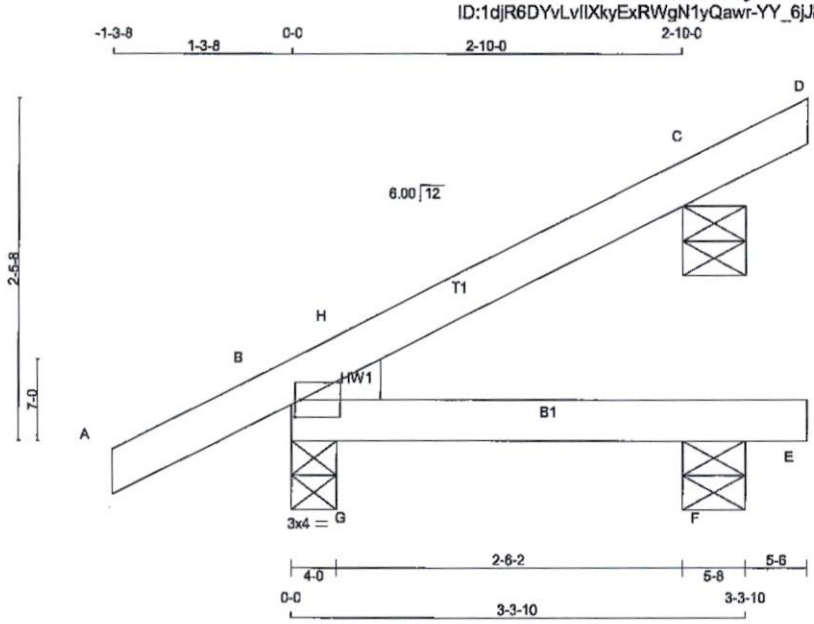

TOTAL WEIGHT = 6 X 12 = 69 lb

[M]

LUMBER

N. L. G. A. RULES

CHORDS	SIZE		LUMBER	DESCR.
A - D	2x4	DRY	No.2	SPF
B - E	2x4	DRY	No.2	SPF

DRY: SEASONED LUMBER.

PLATES (table is in inches)

JT	TYPE	PLATES	W	LEN	Y	X
B	TMBH1-I	MT20	3.0	4.0	1.50	0.50

DIMENSIONS, SUPPORTS AND LOADINGS SPECIFIED BY FABRICATOR TO BE VERIFIED BY BUILDING DESIGNER

BEARINGS

JT	FACTORED GROSS REACTION VERT	HORZ	MAXIMUM FACTORED GROSS REACTION DOWN	HORZ	UPLIFT	INPUT BRG IN-SX	REQRD BRG IN-SX	HEEL WEDGE
B	274	0	274	0	0	4-0	1-8	2x4 L
F	59	0	59	0	0	5-8	1-8	
C	175	0	175	0	0	5-8	5-8	

BEVELED PLATE OR SHIM REQUIRED TO PROVIDE FULL BEARING SURFACE WITH TRUSS CHORD AT JT(S): C

UNFACTORED REACTIONS

JT	1ST LCASE COMBINED	MAX./MIN. COMPONENT REACTIONS SNOW	LIVE	PERM.LIVE	WIND	DEAD	SOIL
B	192	135 / 0	0 / 0	0 / 0	0 / 0	57 / 0	0 / 0
F	45	13 / 0	0 / 0	0 / 0	0 / 0	33 / 0	0 / 0
C	121	94 / 0	0 / 0	0 / 0	0 / 0	28 / 0	0 / 0

BEARING MATERIAL TO BE SPF NO.2 OR BETTER AT JOINT(S) B, F, C

BRACING

TOP CHORD TO BE SHEATHED OR MAX. PURLIN SPACING = 6.25 FT.
MAX. UNBRACED BOTTOM CHORD LENGTH = 10.00 FT OR RIGID CEILING DIRECTLY APPLIED.

ALL PITCH BREAKS AND PERIMETER CORNER JOINTS MUST BE LATERALLY RESTRAINED.

LOADING

TOTAL LOAD CASES: (5)

CHORDS

MEMB. FR-TO	MAX. FACTORED FORCE (LBS)	FACTORED VERT. LOAD (PLF) FROM	TO	LC1 MAX CSI (LC)	MAX. UNBRAC LENGTH
A- B	0 / 16	-84.9	-84.9	0.13 (5)	10.00
B- H	-17 / 0	-84.9	-84.9	0.02 (4)	6.25
H- C	0 / 2	-84.9	-84.9	0.10 (1)	10.00
C- D	-14 / 0	-84.9	-84.9	0.03 (1)	6.25
B- G	0 / 0	-18.5	-18.5	0.08 (1)	10.00
G- F	0 / 0	-18.5	-18.5	0.08 (1)	10.00
F- E	0 / 0	-18.5	-18.5	0.01 (4)	10.00

WEBS

MEMB. FR-TO	MAX. FACTORED FORCE (LBS)	MAX CSI (LC)
G- H	-117 / 2	0.00 (1)

CANTILEVER ANALYSIS HAS BEEN CONSIDERED IN THIS DESIGN

DESIGN CRITERIA

SPECIFIED LOADS:

TOP CH.	LL	=	23.3	PSF
	DL	=	6.0	PSF
BOT CH.	LL	=	0.0	PSF
	DL	=	7.4	PSF
TOTAL LOAD		=	36.7	PSF

SPACING = 24.0 IN. C/C

THIS TRUSS IS DESIGNED FOR RESIDENTIAL OR SMALL BUILDING REQUIREMENTS OF PART 9, NBCC 2010, NBCC 2015

THIS DESIGN COMPLIES WITH:
- PART 9 OF BCBC 2018 , OBC 2012 , ABC 2019
- CSA 086-09, CSA 086-14
- TPIC 2011, TPIC 2014

(55 % OF 27.2 P.S.F. G.S.L. PLUS 8.4 P.S.F. RAIN LOAD) EQUALS 23.3 P.S.F. SPECIFIED ROOF LIVE LOAD

ALLOWABLE DEFL.(LL)= L/360 (0.19")
CALCULATED VERT. DEFL.(LL) = L/ 999 (0.01")
ALLOWABLE DEFL.(TL)= L/360 (0.19")
CALCULATED VERT. DEFL.(TL) = L/ 999 (0.01")

CANTILEVER DEFLECTION:
ALLOWABLE DEFL.(TL)= L/120 (0.19")
CALCULATED VERT. DEFL.(TL) = L/ 999 (0.00")

CSI: TC=0.13/1.00 (A-B:5) , BC=0.08/1.00 (F-G:1) , WB=0.00/1.00 (G-H:1) , SSI=0.10/1.00 (A-B:5)

DOL LUMBER=1.00 NAIL=1.00 LS BEND=1.10 COMP=1.10 SHEAR=1.10 TENS= 1.10

COMPANION LIVE LOAD FACTOR = 1.00

TRUSS PLATE MANUFACTURER IS NOT RESPONSIBLE FOR QUALITY CONTROL IN THE TRUSS MANUFACTURING PLANT .

NAIL VALUES

PLATE	GRIP(DRY) (PSI) MAX	MIN	SHEAR (PLI) MAX	MIN	SECTION (PLI) MAX	MIN
MT20	618	354	1667	788	1987	1656

PLATE PLACEMENT TOL. = 0.250 inches

PLATE ROTATION TOL. = 5.0 Deg.

JSI GRIP= 0.89 (B) (INPUT = 0.90)
JSI METAL= 0.05 (B) (INPUT = 1.00)

NOTE: Lateral brace(s) shown shall be 2x4 SPF #2

LICENSED PROFESSIONAL ENGINEER
11/11/2019
R. TURENNE
100157040
PROVINCE OF ONTARIO

JOB NAME	TRUSS NAME	QUANTITY	PLY	JOB DESC.	DRWG NO.
314237	H1T		2	TRUSS DESC. JT-39002	E-19112581

Alpa Roof Truss, Maple

Version 8.300 S Aug 9 2019 MiTek Industries, Inc. Mon Nov 11 14:28:54 2019 Page 1

ID:1djR6DYvLvIlXkyExRWgN1yQawr-p_CRsVMH3C69v4vguC74RUX7dv0LPEsPquriRLyKEs7

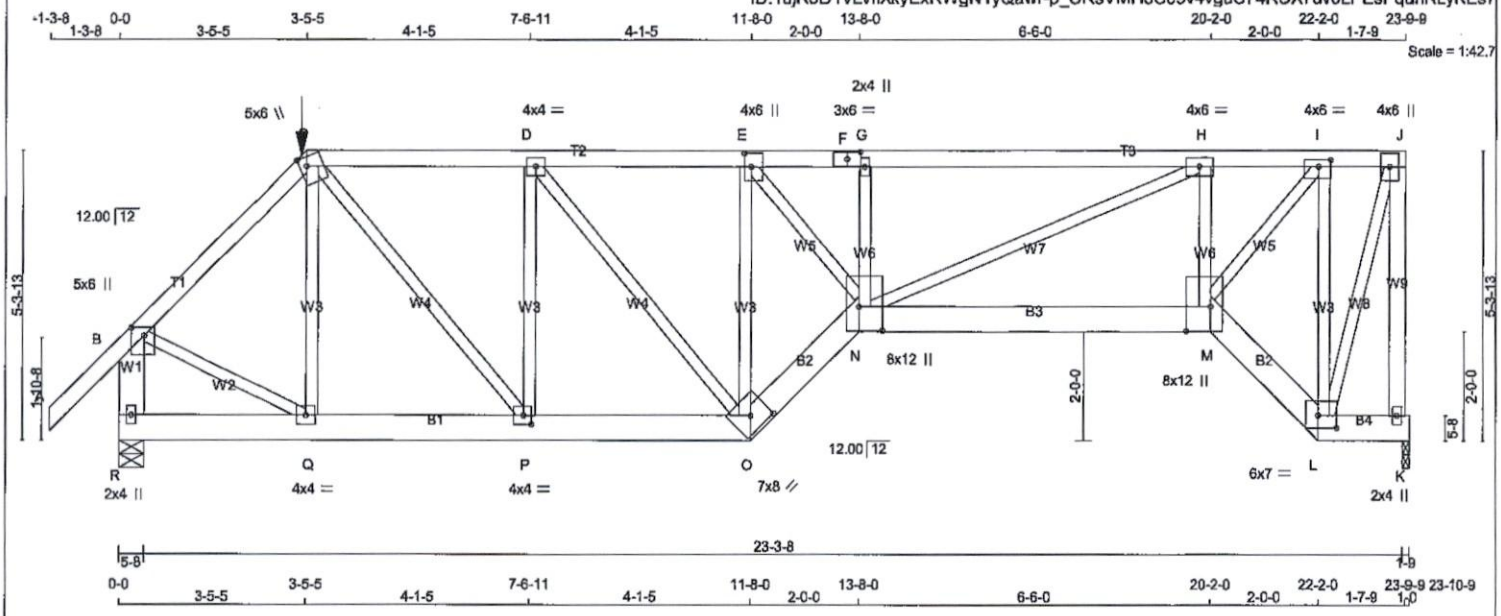

TOTAL WEIGHT = 4 X 132 = 529 lb

[M]

LUMBER

N. L. G. A. RULES

CHORDS	SIZE		LUMBER	DESCR.
A - C	2x4	DRY	No.2	SPF
C - F	2x4	DRY	No.2	SPF
F - J	2x4	DRY	No.2	SPF
K - J	2x4	DRY	No.2	SPF
R - B	2x6	DRY	No.2	SPF
R - O	2x6	DRY	No.2	SPF
O - N	2x6	DRY	No.2	SPF
N - M	2x6	DRY	No.2	SPF
M - L	2x6	DRY	No.2	SPF
L - K	2x6	DRY	No.2	SPF
ALL WEBS EXCEPT	2x3	DRY	No.2	SPF

DRY: SEASONED LUMBER.

DESIGN CONSISTS OF 2 TRUSSES BUILT SEPARATELY THEN FASTENED TOGETHER AS FOLLOWS:

CHORDS	#ROWS	SURFACE SPACING (IN)	LOAD(PLF)
TOP CHORDS : (0.122"X3") SPIRAL NAILS			
A- C	1	12	SIDE(61.0)
C- F	1	12	SIDE(41.1)
F- J	1	12	SIDE(41.1)
J- K	1	12	TOP
R- B	2	12	TOP
BOTTOM CHORDS : (0.122"X3") SPIRAL NAILS			
R- O	2	12	SIDE(10.0)
O- N	2	12	SIDE(7.1)
N- M	2	12	SIDE(50.1)
M- L	2	12	SIDE(7.1)
L- K	2	12	SIDE(10.0)
WEBS : (0.122"X3") SPIRAL NAILS			
Q- C	1	6	SIDE(14.5)
2x3	1	6	

NAILS TO BE DRIVEN FROM ONE SIDE ONLY.

GIRDER NAILING ASSUMES NAILED HANGERS ARE FASTENED WITH MIN. 3-0 INCH NAILS.

NOTE: Lateral brace(s) shown shall be 2x4 SPF #2

LICENSED PROFESSIONAL ENGINEER
11/11/2019
R. TURENNE
100157040
PROVINCE OF ONTARIO

DIMENSIONS, SUPPORTS AND LOADINGS SPECIFIED BY FABRICATOR TO BE VERIFIED BY BUILDING DESIGNER

BEARINGS

JT	FACTORED GROSS REACTION VERT	HORZ	MAXIMUM FACTORED GROSS REACTION DOWN	HORZ	UPLIFT	INPUT BRG IN-SX	REQRD BRG IN-SX
K	2444	0	2444	0	0	1-9	1-8
R	2464	0	2464	0	0	5-8	1-8

UNFACTORED REACTIONS

JT	1ST LCASE COMBINED	MAX./MIN. COMPONENT REACTIONS SNOW	LIVE	PERM.LIVE	WIND	DEAD	SOIL
K	1734	1103 / 0	0 / 0	0 / 0	0 / 0	631 / 0	0 / 0
R	1748	1115 / 0	0 / 0	0 / 0	0 / 0	634 / 0	0 / 0

BEARING MATERIAL TO BE SPF NO.2 OR BETTER AT JOINT(S) K, R

BRACING

TOP CHORD TO BE SHEATHED OR MAX. PURLIN SPACING = 4.03 FT.
MAX. UNBRACED BOTTOM CHORD LENGTH = 10.00 FT OR RIGID CEILING DIRECTLY APPLIED.

ALL PITCH BREAKS AND PERIMETER CORNER JOINTS MUST BE LATERALLY RESTRAINED.

LOADING

TOTAL LOAD CASES: (4)

CHORDS

MEMB. FR-TO	MAX. FACTORED FORCE (LBS)	FACTORED VERT. LOAD (PLF) FROM	TO	LC1 MAX CSI (LC)	MAX. UNBRAC LENGTH
A- B	0 / 42	-84.9	-84.9	0.07 (1)	10.00
B- C	-2163 / 0	-84.9	-84.9	0.12 (1)	5.92
C- D	-2630 / 0	-167.1	-167.1	0.27 (1)	5.29
D- E	-3004 / 0	-167.1	-167.1	0.28 (1)	5.01
E- F	-4964 / 0	-167.1	-167.1	0.19 (1)	4.18
F- G	-4964 / 0	-167.1	-167.1	0.19 (1)	4.18
G- H	-4950 / 0	-84.9	-84.9	0.40 (1)	4.03
H- I	-2685 / 0	-167.1	-167.1	0.24 (1)	5.28
I- J	-735 / 0	-167.1	-167.1	0.10 (1)	6.25
K- J	-2414 / 0	0.0	0.0	0.56 (1)	7.25
R- B	-2419 / 0	0.0	0.0	0.09 (1)	7.81
R- Q	0 / 0	-36.4	-36.4	0.03 (4)	10.00
Q- P	0 / 1513	-36.4	-36.4	0.12 (1)	10.00
P- O	0 / 2631	-36.4	-36.4	0.20 (1)	10.00
O- N	0 / 4151	-36.4	-36.4	0.28 (1)	10.00
N- M	0 / 2745	-118.6	-118.6	0.41 (1)	10.00
M- L	0 / 955	-36.4	-36.4	0.07 (1)	10.00
L- K	0 / 0	-36.4	-36.4	0.01 (4)	10.00

WEBS

MEMB. FR-TO	MAX. FACTORED FORCE (LBS)	MAX CSI (LC)
Q- C	-445 / 0	0.09 (1)
C- P	0 / 1741	0.22 (1)
P- D	-1234 / 0	0.25 (1)
D- O	0 / 580	0.07 (1)
O- E	-3238 / 0	0.66 (1)
E- N	0 / 3452	0.43 (1)
N- G	-447 / 0	0.04 (1)
N- H	0 / 2453	0.30 (1)
M- H	-1669 / 0	0.17 (1)
M- I	0 / 3419	0.42 (1)
L- I	-2818 / 0	0.57 (1)
L- J	0 / 2327	0.29 (1)
B- Q	0 / 1643	0.20 (1)

FACTORED CONCENTRATED LOADS (LBS)

JT	LOC.	LC1	MAX-	MAX+	FACE	DIR.	TYPE	HEEL	CONN.
C	3-5-5	-213	-213	—	FRONT	VERT	TOTAL	—	C1

CONNECTION REQUIREMENTS

1) **C1:** A SUITABLE HANGER/MECHANICAL CONNECTION IS REQUIRED.

DESIGN CRITERIA

SPECIFIED LOADS:

TOP CH.	LL	=	23.3	PSF
	DL	=	6.0	PSF
BOT CH.	LL	=	0.0	PSF
	DL	=	7.4	PSF
TOTAL LOAD		=	36.7	PSF

SPACING = 24.0 IN. C/C

LOADING IN FLAT SECTION BASED ON A SLOPE OF 2.00/12 MINIMUM

GIRDER TYPE: CPrimeHip
LEFT SETBACK = 3-5-5
RIGHT SETBACK = 0-0
END SETBACK = 5-10-8
END WALL WIDTH = 0-0
CORNER FRAMING TYPE: CONVENTIONAL
END JACK TYPE: CONVENTIONAL
APPLIED TO FRONT SIDE
- ADDT'L LOADS BASED ON 55 % OF GSL.
LOADS APPLIED TO FIRST 13-8-0 OF SPAN MEASURED FROM THE LEFT.

GIRDER TYPE: CStdGirder
START DISTANCE = 13-8-0
START SPAN CARRIED = 5-10-8
END DISTANCE = 20-2-0
END SPAN CARRIED = 5-10-8
END WALL WIDTH = 0-0
APPLIED TO FRONT SIDE OF BOTTOM CHORD.
- ADDT'L LOADS BASED ON 55 % OF GSL.

GIRDER TYPE: CPrimeHip
LEFT SETBACK = 3-5-5
RIGHT SETBACK = 0-0
END SETBACK = 5-10-8
END WALL WIDTH = 0-0
CORNER FRAMING TYPE: CONVENTIONAL
END JACK TYPE: CONVENTIONAL
APPLIED TO FRONT SIDE
- ADDT'L LOADS BASED ON 55 % OF GSL.
LOADS APPLIED TO FIRST 3-8-9 OF SPAN MEASURED FROM THE RIGHT.

THIS TRUSS IS DESIGNED FOR RESIDENTIAL OR SMALL BUILDING REQUIREMENTS OF PART 9, NBCC 2010, NBCC 2015

THIS DESIGN COMPLIES WITH:
- PART 9 OF BCBC 2018 , OBC 2012 , ABC 2019
- CSA 086-09, CSA 086-14
- TPIC 2011, TPIC 2014

(55 % OF 27.2 P.S.F. G.S.L. PLUS 8.4 P.S.F. RAIN LOAD) EQUALS 23.3 P.S.F. SPECIFIED ROOF LIVE LOAD

ALLOWABLE DEFL.(LL)= L/360 (0.79")
CALCULATED VERT. DEFL.(LL) = L/ 999 (0.12")
ALLOWABLE DEFL.(TL)= L/360 (0.79")
CALCULATED VERT. DEFL.(TL) = L/ 999 (0.24")

CSI: TC=0.56/1.00 (J-K:1) , BC=0.41/1.00 (M-N:1) , WB=0.66/1.00 (E-O:1) , SSI=0.18/1.00 (C-D:1)

CONTINUED ON PAGE 2

JOB NAME	TRUSS NAME	QUANTITY	PLY	JOB DESC.	DRWG NO.
314237	H1T		2	TRUSS DESC. JT-39002	E-19112581(2)

PLATES (table is in inches)

JT	TYPE	PLATES	W	LEN	Y	X
B	TMVW+p	MT20	5.0	6.0	1.75	2.75
C	TTWW+m	MT20	5.0	6.0	2.00	1.50
D	TMWW-t	MT20	4.0	4.0		
E	TMWW+t	MT20	4.0	6.0	3.00	1.50
F	TS-t	MT20	3.0	6.0	1.50	3.00
G	TMW+w	MT20	2.0	4.0		
H	TMWW-t	MT20	4.0	6.0		
I	TMWW-t	MT20	4.0	6.0	1.50	2.75
J	TMVW+p	MT20	4.0	6.0		
K	BMV1+p	MT20	2.0	4.0		
L	BBWW-t	MT20	6.0	7.0	2.75	4.25
M	BBWW+p	MT20	8.0	12.0	5.50	5.25
N	BBWWW+p	MT20	8.0	12.0	5.25	5.25
O	BBWW-h	MT20	7.0	8.0	3.25	4.00
P	BMWW-t	MT20	4.0	4.0	2.00	1.75
Q	BMWW-t	MT20	4.0	4.0		
R	BMV1+p	MT20	2.0	4.0		

NOTE: Lateral brace(s) shown shall be 2x4 SPF #2

LICENSED PROFESSIONAL ENGINEER
11/11/2019
B. TURENNE
100157040
PROVINCE OF ONTARIO

DOL LUMBER=1.00 NAIL=1.00 LS BEND=1.00
COMP=1.00 SHEAR=1.00 TENS= 1.00

COMPANION LIVE LOAD FACTOR = 1.00

AUTOSOLVE RIGHT HEEL ONLY

TRUSS PLATE MANUFACTURER IS NOT RESPONSIBLE FOR QUALITY CONTROL IN THE TRUSS MANUFACTURING PLANT .

NAIL VALUES

PLATE	GRIP(DRY) (PSI)		SHEAR (PLI)		SECTION (PLI)	
	MAX	MIN	MAX	MIN	MAX	MIN
MT20	618	354	1667	788	1987	1656

PLATE PLACEMENT TOL. = 0.250 inches

PLATE ROTATION TOL. = 5.0 Deg.

JSI GRIP= 0.90 (I) (INPUT = 0.90)
JSI METAL= 0.44 (E) (INPUT = 1.00)

JOB NAME	TRUSS NAME	QUANTITY	PLY	JOB DESC.	DRWG NO.
314237	H2T		1	TRUSS DESC. JT-39002	E-19112582

Alpa Roof Truss, Maple

Version 8.300 S Aug 9 2019 MiTek Industries, Inc. Mon Nov 11 14:28:55 2019 Page 1

ID:1djR6DYvLvlIXkyExRWgN1yQawr-IBmq3rNwqVE0WDUsSveJzh4IFJO58dOZ2YbFznyKEs6

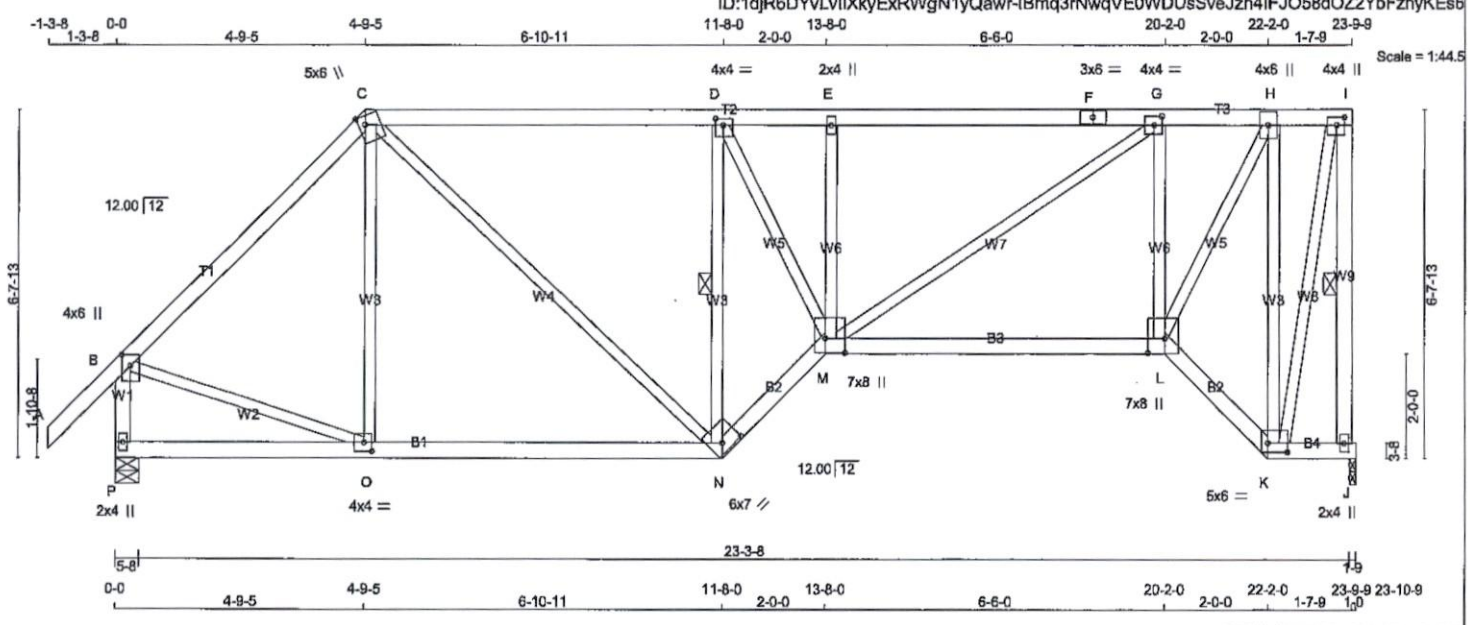

TOTAL WEIGHT = 2 X 121 = 242 lb [M]

LUMBER

N. L. G. A. RULES

CHORDS	SIZE		LUMBER	DESCR.
A - C	2x4	DRY	No.2	SPF
C - F	2x4	DRY	No.2	SPF
F - I	2x4	DRY	No.2	SPF
J - I	2x4	DRY	No.2	SPF
P - B	2x4	DRY	No.2	SPF
P - N	2x4	DRY	No.2	SPF
N - M	2x4	DRY	No.2	SPF
M - L	2x4	DRY	No.2	SPF
L - K	2x4	DRY	No.2	SPF
K - J	2x4	DRY	No.2	SPF
ALL WEBS EXCEPT	2x3	DRY	No.2	SPF

DRY: SEASONED LUMBER.

PLATES (table is in inches)

JT	TYPE	PLATES	W	LEN	Y	X
B	TMVW+p	MT20	4.0	6.0	2.50	2.00
C	TTWW+m	MT20	5.0	6.0	2.00	1.50
D	TMWW-t	MT20	4.0	4.0	1.50	1.75
E	TMW+w	MT20	2.0	4.0		
F	TS-t	MT20	3.0	6.0		
G	TMWW-t	MT20	4.0	4.0	2.00	1.75
H	TMWW+t	MT20	4.0	6.0		
I	TMVW+p	MT20	4.0	4.0	1.75	1.75
J	BMV1+p	MT20	2.0	4.0		
K	BBWW-l	MT20	5.0	6.0	2.00	4.50
L	BBWW+p	MT20	7.0	8.0	3.25	3.75
M	BBWWW+p	MT20	7.0	8.0	3.25	4.50
N	BBWW-h	MT20	6.0	7.0	2.00	4.25
O	BMWW-t	MT20	4.0	4.0	2.00	1.75
P	BMV1+p	MT20	2.0	4.0		

NOTE: Lateral brace(s) shown shall be 2x4 SPF #2

LICENSED PROFESSIONAL ENGINEER
11/11/2019
R. TURENNE
100157040
PROVINCE OF ONTARIO

DIMENSIONS, SUPPORTS AND LOADINGS SPECIFIED BY FABRICATOR TO BE VERIFIED BY BUILDING DESIGNER

BEARINGS

JT	FACTORED GROSS REACTION VERT	HORZ	MAXIMUM FACTORED GROSS REACTION DOWN	HORZ	UPLIFT	INPUT BRG IN-SX	REQRD BRG IN-SX
J	1230	0	1230	0	0	1-9	1-8
P	1348	0	1348	0	0	5-8	2-0

UNFACTORED REACTIONS

JT	1ST LCASE COMBINED	MAX./MIN. COMPONENT REACTIONS SNOW	LIVE	PERM.LIVE	WIND	DEAD	SOIL
J	873	554 / 0	0 / 0	0 / 0	0 / 0	319 / 0	0 / 0
P	955	619 / 0	0 / 0	0 / 0	0 / 0	336 / 0	0 / 0

BEARING MATERIAL TO BE SPF NO.2 OR BETTER AT JOINT(S) J, P

BRACING

TOP CHORD TO BE SHEATHED OR MAX. PURLIN SPACING = 4.38 FT.
MAX. UNBRACED BOTTOM CHORD LENGTH = 10.00 FT OR RIGID CEILING DIRECTLY APPLIED.

ALL PITCH BREAKS AND PERIMETER CORNER JOINTS MUST BE LATERALLY RESTRAINED.

1 LATERAL BRACE(S) AT 1/ 2 LENGTH OF I-J, D-N.

END VERTICAL(S) MUST BE SHEATHED OR HAVE BRACES AS INDICATED IN THE MAX. UNBRACED LENGTH COLUMN OF THE TABLE BELOW

LOADING

TOTAL LOAD CASES: (4)

CHORDS

MEMB. FR-TO	MAX. FACTORED FORCE (LBS)	FACTORED VERT. LOAD LC1 (PLF) FROM	TO	MAX CSI (LC)	MAX. UNBRAC LENGTH
A- B	0 / 42	-84.9	-84.9	0.12 (1)	10.00
B- C	-1075 / 0	-84.9	-84.9	0.39 (1)	5.59
C- D	-1216 / 0	-84.9	-84.9	0.57 (1)	5.04
D- E	-1688 / 0	-84.9	-84.9	0.52 (1)	4.38
E- F	-1695 / 0	-84.9	-84.9	0.46 (1)	4.60
F- G	-1695 / 0	-84.9	-84.9	0.46 (1)	4.60
G- H	-928 / 0	-84.9	-84.9	0.37 (1)	5.86
H- I	-280 / 0	-84.9	-84.9	0.13 (1)	6.25
J- I	-1215 / 0	0.0	0.0	0.25 (1)	5.81
P- B	-1320 / 0	0.0	0.0	0.15 (1)	7.04
P- O	0 / 0	-18.5	-18.5	0.20 (4)	10.00
O- N	0 / 756	-18.5	-18.5	0.27 (4)	10.00
N- M	0 / 1685	-18.5	-18.5	0.28 (1)	10.00
M- L	0 / 954	-18.5	-18.5	0.31 (4)	10.00
L- K	0 / 365	-18.5	-18.5	0.07 (1)	10.00
K- J	0 / 0	-18.5	-18.5	0.01 (4)	10.00

WEBS

MEMB. FR-TO	MAX. FACTORED FORCE (LBS)	MAX CSI (LC)
O- C	-103 / 64	0.08 (1)
C- N	0 / 624	0.14 (1)
N- D	-1540 / 0	0.44 (1)
D- M	0 / 1137	0.26 (1)
M- E	-255 / 0	0.08 (1)
M- G	0 / 895	0.20 (1)
L- G	-1042 / 0	0.33 (1)
L- H	0 / 1533	0.34 (1)
K- H	-1312 / 0	0.96 (1)
K- I	0 / 1122	0.25 (1)
B- O	0 / 794	0.18 (1)

DESIGN CRITERIA

SPECIFIED LOADS:

TOP CH.	LL	=	23.3	PSF
	DL	=	6.0	PSF
BOT CH.	LL	=	0.0	PSF
	DL	=	7.4	PSF
TOTAL LOAD		=	36.7	PSF

SPACING = 24.0 IN. C/C

LOADING IN FLAT SECTION BASED ON A SLOPE OF 2.00/12 MINIMUM

THIS TRUSS IS DESIGNED FOR RESIDENTIAL OR SMALL BUILDING REQUIREMENTS OF PART 9, NBCC 2010, NBCC 2015

THIS DESIGN COMPLIES WITH:
- PART 9 OF BCBC 2018 , OBC 2012 , ABC 2019
- CSA 086-09, CSA 086-14
- TPIC 2011, TPIC 2014

(55 % OF 27.2 P.S.F. G.S.L. PLUS 8.4 P.S.F. RAIN LOAD) EQUALS 23.3 P.S.F. SPECIFIED ROOF LIVE LOAD

ALLOWABLE DEFL.(LL)= L/360 (0.79")
CALCULATED VERT. DEFL.(LL) = L/ 999 (0.09")
ALLOWABLE DEFL.(TL)= L/360 (0.79")
CALCULATED VERT. DEFL.(TL) = L/ 999 (0.21")

CSI: TC=0.57/1.00 (C-D:1) , BC=0.31/1.00 (L-M:4) , WB=0.96/1.00 (H-K:1) , SSI=0.26/1.00 (C-D:1)

DOL LUMBER=1.00 NAIL=1.00 LS BEND=1.10 COMP=1.10 SHEAR=1.10 TENS= 1.10

COMPANION LIVE LOAD FACTOR = 1.00

TRUSS PLATE MANUFACTURER IS NOT RESPONSIBLE FOR QUALITY CONTROL IN THE TRUSS MANUFACTURING PLANT .

NAIL VALUES

PLATE	GRIP(DRY) (PSI) MAX	MIN	SHEAR (PLI) MAX	MIN	SECTION (PLI) MAX	MIN
MT20	618	354	1667	788	1987	1656

PLATE PLACEMENT TOL. = 0.250 inches

PLATE ROTATION TOL. = 5.0 Deg.

JSI GRIP= 0.89 (H) (INPUT = 0.90)
JSI METAL= 0.48 (B) (INPUT = 1.00)

JOB NAME	TRUSS NAME	QUANTITY	PLY	JOB DESC.	DRWG NO.
314237	H3T		1	TRUSS DESC. JT-39002	E-19112583

Alpa Roof Truss, Maple

Version 8.300 S Aug 9 2019 MiTek Industries, Inc. Mon Nov 11 14:28:57 2019 Page 1
ID:1djR6DYvLvIlXkyExRWgN1yQawr-EZuaUWOAM7UkmXeFZKgn269gB73scbsrWs4M1gyKEs4

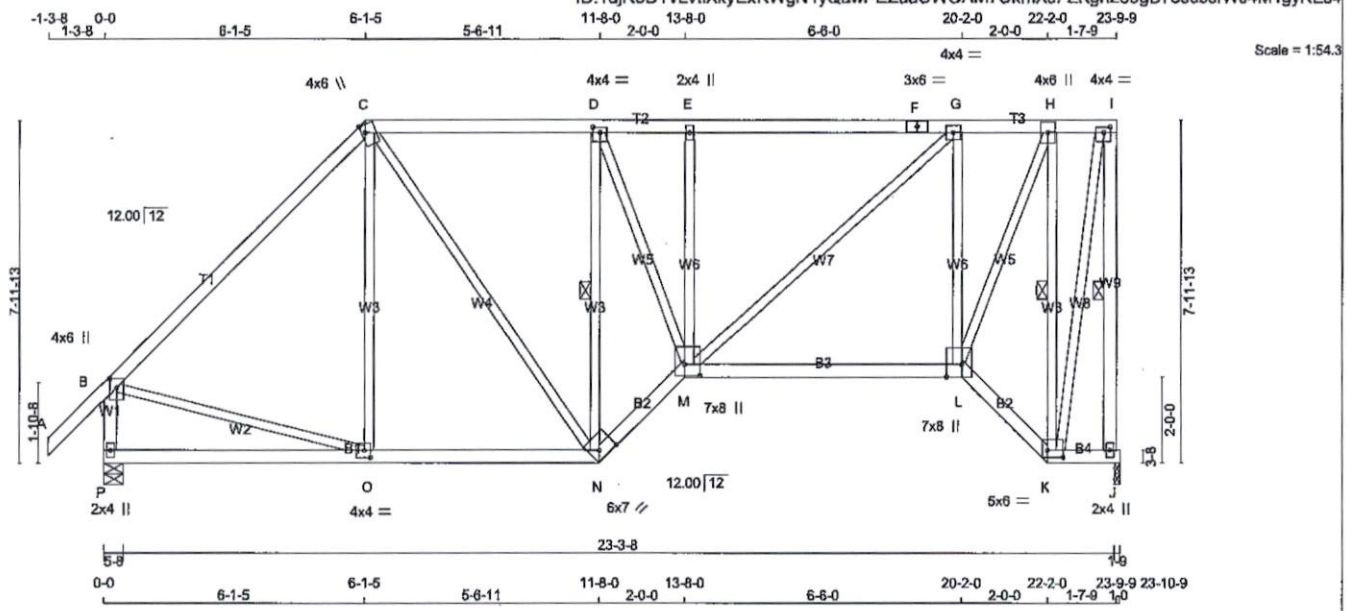

TOTAL WEIGHT = 2 X 133 = 267 lb [M]

LUMBER
N. L. G. A. RULES

CHORDS	SIZE		LUMBER	DESCR.
A - C	2x4	DRY	2100F 1.8E	SPF
C - F	2x4	DRY	No.2	SPF
F - I	2x4	DRY	No.2	SPF
J - I	2x4	DRY	No.2	SPF
P - B	2x4	DRY	No.2	SPF
P - N	2x4	DRY	No.2	SPF
N - M	2x4	DRY	No.2	SPF
M - L	2x4	DRY	No.2	SPF
L - K	2x4	DRY	No.2	SPF
K - J	2x4	DRY	No.2	SPF
ALL WEBS EXCEPT	2x3	DRY	No.2	SPF

DRY: SEASONED LUMBER.

PLATES (table is in inches)

JT	TYPE	PLATES	W	LEN	Y	X
B	TMVW+p	MT20	4.0	6.0	2.50	2.00
C	TTWW+m	MT20	4.0	6.0	Edge	1.00
D	TMWW-t	MT20	4.0	4.0	1.50	2.00
E	TMW+w	MT20	2.0	4.0		
F	TS-t	MT20	3.0	6.0		
G	TMWW-t	MT20	4.0	4.0		
H	TMWW+t	MT20	4.0	6.0		
I	TMVW-t	MT20	4.0	4.0	1.50	1.75
J	BMV1+p	MT20	2.0	4.0		
K	BBWW-l	MT20	5.0	6.0	2.00	4.50
L	BBWW+p	MT20	7.0	8.0	Edge	4.25
M	BBWWW+p	MT20	7.0	8.0	3.00	4.25
N	BBWW-h	MT20	6.0	7.0	2.25	4.50
O	BMWW-t	MT20	4.0	4.0	2.00	1.75
P	BMV1+p	MT20	2.0	4.0		

Edge - INDICATES REFERENCE CORNER OF PLATE TOUCHES EDGE OF CHORD.

NOTE: Lateral brace(s) shown shall be 2x4 SPF #2

LICENSED PROFESSIONAL ENGINEER
11/11/2019
R. TURENNE
100157040
PROVINCE OF ONTARIO

DIMENSIONS, SUPPORTS AND LOADINGS SPECIFIED BY FABRICATOR TO BE VERIFIED BY BUILDING DESIGNER

BEARINGS

JT	FACTORED GROSS REACTION VERT	HORZ	MAXIMUM FACTORED GROSS REACTION DOWN	HORZ	UPLIFT	INPUT BRG IN-SX	REQRD BRG IN-SX
J	1230	0	1230	0	0	1-9	1-8
P	1348	0	1348	0	0	5-8	2-0

UNFACTORED REACTIONS

JT	1ST LCASE COMBINED	MAX./MIN. COMPONENT REACTIONS SNOW	LIVE	PERM.LIVE	WIND	DEAD	SOIL
J	873	554 / 0	0 / 0	0 / 0	0 / 0	319 / 0	0 / 0
P	955	619 / 0	0 / 0	0 / 0	0 / 0	336 / 0	0 / 0

BEARING MATERIAL TO BE SPF NO.2 OR BETTER AT JOINT(S) J, P

BRACING
TOP CHORD TO BE SHEATHED OR MAX. PURLIN SPACING = 5.17 FT.
MAX. UNBRACED BOTTOM CHORD LENGTH = 10.00 FT OR RIGID CEILING DIRECTLY APPLIED.

ALL PITCH BREAKS AND PERIMETER CORNER JOINTS MUST BE LATERALLY RESTRAINED.

1 LATERAL BRACE(S) AT 1/ 2 LENGTH OF I-J, D-N, H-K.

END VERTICAL(S) MUST BE SHEATHED OR HAVE BRACES AS INDICATED IN THE MAX. UNBRACED LENGTH COLUMN OF THE TABLE BELOW

LOADING
TOTAL LOAD CASES: (4)

CHORDS

MEMB. FR-TO	MAX. FACTORED FORCE (LBS)	FACTORED VERT. LOAD (PLF) FROM	TO	LC1	MAX CSI (LC)	MAX. UNBRAC LENGTH
A- B	0 / 42	-84.9	-84.9	0.08 (1)	10.00	
B- C	-1050 / 0	-84.9	-84.9	0.41 (1)	6.25	
C- D	-985 / 0	-84.9	-84.9	0.33 (1)	5.83	
D- E	-1294 / 0	-84.9	-84.9	0.30 (1)	5.28	
E- F	-1300 / 0	-84.9	-84.9	0.41 (1)	5.17	
F- G	-1300 / 0	-84.9	-84.9	0.41 (1)	5.17	
G- H	-708 / 0	-84.9	-84.9	0.35 (1)	6.25	
H- I	-231 / 0	-84.9	-84.9	0.13 (1)	6.25	
J- I	-1215 / 0	0.0	0.0	0.35 (1)	5.81	
P- B	-1303 / 0	0.0	0.0	0.15 (1)	7.08	
P- O	0 / 0	-18.5	-18.5	0.18 (4)	10.00	
O- N	0 / 740	-18.5	-18.5	0.25 (4)	10.00	
N- M	0 / 1369	-18.5	-18.5	0.23 (1)	10.00	
M- L	0 / 727	-18.5	-18.5	0.29 (4)	10.00	
L- K	0 / 303	-18.5	-18.5	0.06 (1)	10.00	
K- J	0 / 0	-18.5	-18.5	0.01 (4)	10.00	

WEBS

MEMB. FR-TO	MAX. FACTORED FORCE (LBS)	MAX CSI (LC)
O- C	-51 / 82	0.06 (1)
N- C	0 / 417	0.09 (1)
N- D	-1246 / 0	0.50 (1)
D- M	0 / 936	0.21 (1)
M- E	-339 / 0	0.19 (1)
M- G	0 / 766	0.17 (1)
L- G	-1037 / 0	0.58 (1)
L- H	0 / 1418	0.32 (1)
K- H	-1267 / 0	0.51 (1)
K- I	0 / 1111	0.25 (1)
B- O	0 / 762	0.17 (1)

DESIGN CRITERIA

SPECIFIED LOADS:

TOP CH.	LL	=	23.3	PSF
	DL	=	6.0	PSF
BOT CH.	LL	=	0.0	PSF
	DL	=	7.4	PSF
TOTAL LOAD		=	36.7	PSF

SPACING = 24.0 IN. C/C

LOADING IN FLAT SECTION BASED ON A SLOPE OF 2.00/12 MINIMUM

THIS TRUSS IS DESIGNED FOR RESIDENTIAL OR SMALL BUILDING REQUIREMENTS OF PART 9, NBCC 2010, NBCC 2015

THIS DESIGN COMPLIES WITH:
- PART 9 OF BCBC 2018 , OBC 2012 , ABC 2019
- CSA 086-09, CSA 086-14
- TPIC 2011, TPIC 2014

(55 % OF 27.2 P.S.F. G.S.L. PLUS 8.4 P.S.F. RAIN LOAD) EQUALS 23.3 P.S.F. SPECIFIED ROOF LIVE LOAD

ALLOWABLE DEFL.(LL)= L/360 (0.79")
CALCULATED VERT. DEFL.(LL) = L/ 999 (0.08")
ALLOWABLE DEFL.(TL)= L/360 (0.79")
CALCULATED VERT. DEFL.(TL) = L/ 999 (0.20")

CSI: TC=0.41/1.00 (E-G:1) , BC=0.29/1.00 (L-M:4) , WB=0.58/1.00 (G-L:1) , SSI=0.22/1.00 (E-G:1)

DOL LUMBER=1.00 NAIL=1.00 LS BEND=1.10 COMP=1.10 SHEAR=1.10 TENS= 1.10

COMPANION LIVE LOAD FACTOR = 1.00

TRUSS PLATE MANUFACTURER IS NOT RESPONSIBLE FOR QUALITY CONTROL IN THE TRUSS MANUFACTURING PLANT .

NAIL VALUES

PLATE	GRIP(DRY) (PSI) MAX	MIN	SHEAR (PLI) MAX	MIN	SECTION (PLI) MAX	MIN
MT20	618	354	1667	788	1987	1656

PLATE PLACEMENT TOL. = 0.250 inches

PLATE ROTATION TOL. = 5.0 Deg.

JSI GRIP= 0.88 (I) (INPUT = 0.90)
JSI METAL= 0.49 (B) (INPUT = 1.00)

JOB NAME	TRUSS NAME	QUANTITY	PLY	JOB DESC.	DRWG NO.
314237	H4T		1	TRUSS DESC. JT-39002	E-19112584

Alpa Roof Truss, Maple

Version 8.300 S Aug 9 2019 MiTek Industries, Inc. Mon Nov 11 14:28:59 2019 Page 1
ID:1djR6DYvLvlfXkyExRWgN1yQawr-Ay0KvCQQukkS?rodhljF8XE?KwlL4P38zAZT6YyKEs2

Scale = 1:62.0

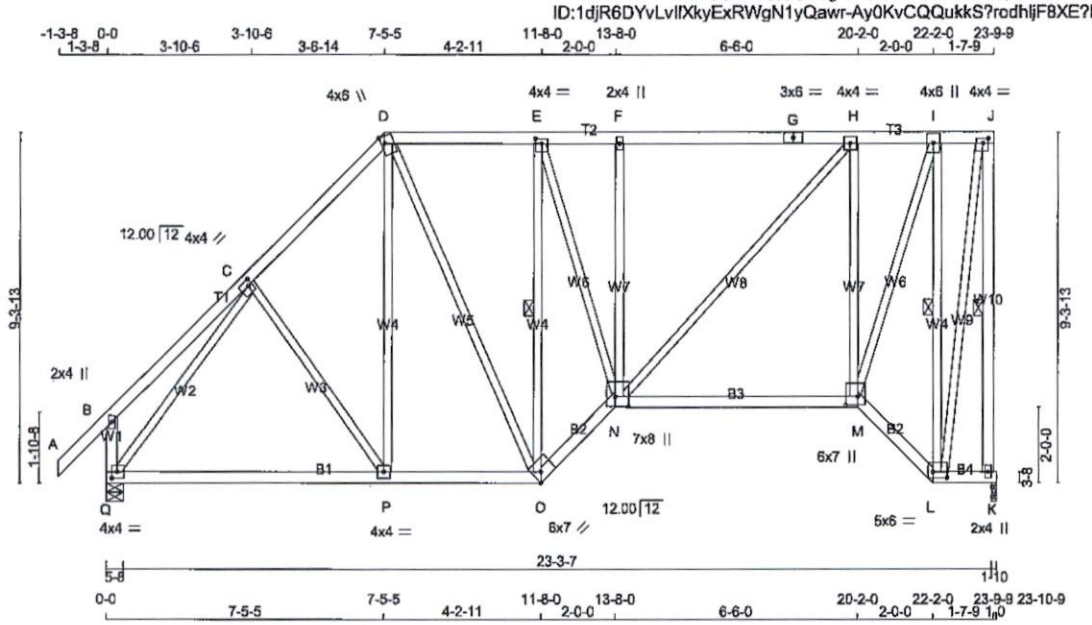

TOTAL WEIGHT = 2 X 160 = 301 lb [M]

LUMBER

N. L. G. A. RULES

CHORDS	SIZE		LUMBER	DESCR.
A - D	2x4	DRY	No.2	SPF
D - G	2x4	DRY	No.2	SPF
G - J	2x4	DRY	No.2	SPF
K - J	2x4	DRY	No.2	SPF
Q - B	2x4	DRY	No.2	SPF
Q - O	2x4	DRY	No.2	SPF
O - N	2x4	DRY	No.2	SPF
N - M	2x4	DRY	No.2	SPF
M - L	2x4	DRY	No.2	SPF
L - K	2x4	DRY	No.2	SPF
ALL WEBS EXCEPT	2x3	DRY	No.2	SPF

DRY: SEASONED LUMBER.

PLATES (table is in inches)

JT	TYPE	PLATES	W	LEN	Y	X
B	TMV+p	MT20	2.0	4.0		
C	TMWW-t	MT20	4.0	4.0	1.75	1.25
D	TTWW+m	MT20	4.0	6.0	Edge	1.00
E	TMWW-t	MT20	4.0	4.0	1.50	2.00
F	TMW+w	MT20	2.0	4.0		
G	TS-t	MT20	3.0	6.0		
H	TMWW-t	MT20	4.0	4.0		
I	TMWW+t	MT20	4.0	6.0		
J	TMVW-t	MT20	4.0	4.0	1.50	1.75
K	BMV1+p	MT20	2.0	4.0		
L	BBWW-l	MT20	5.0	6.0	2.00	4.50
M	BBWW+p	MT20	6.0	7.0	2.75	3.75
N	BBWWW+p	MT20	7.0	8.0	3.25	4.25
O	BBWW-h	MT20	6.0	7.0	Edge	2.50
P	BMWW-t	MT20	4.0	4.0		
Q	BMVW1-t	MT20	4.0	4.0	2.00	1.75

Edge - INDICATES REFERENCE CORNER OF PLATE TOUCHES EDGE OF CHORD.

NOTE: Lateral brace(s) shown shall be 2x4 SPF #2

LICENSED PROFESSIONAL ENGINEER
11/11/2019
R. TURENNE
100157040
PROVINCE OF ONTARIO

DIMENSIONS, SUPPORTS AND LOADINGS SPECIFIED BY FABRICATOR TO BE VERIFIED BY BUILDING DESIGNER

BEARINGS

JT	FACTORED GROSS REACTION VERT	HORZ	MAXIMUM FACTORED GROSS REACTION DOWN	HORZ	UPLIFT	INPUT BRG IN-SX	REQRD BRG IN-SX
K	1230	0	1230	0	0	1-10	1-8
Q	1348	0	1348	0	0	5-8	1-8

UNFACTORED REACTIONS

JT	1ST LCASE COMBINED	MAX./MIN. COMPONENT REACTIONS SNOW	LIVE	PERM.LIVE	WIND	DEAD	SOIL
K	873	554 / 0	0 / 0	0 / 0	0 / 0	319 / 0	0 / 0
Q	955	619 / 0	0 / 0	0 / 0	0 / 0	336 / 0	0 / 0

BEARING MATERIAL TO BE SPF NO.2 OR BETTER AT JOINT(S) K, Q

BRACING

TOP CHORD TO BE SHEATHED OR MAX. PURLIN SPACING = 5.63 FT.
MAX. UNBRACED BOTTOM CHORD LENGTH = 10.00 FT OR RIGID CEILING DIRECTLY APPLIED.

ALL PITCH BREAKS AND PERIMETER CORNER JOINTS MUST BE LATERALLY RESTRAINED.

1 LATERAL BRACE(S) AT 1/ 2 LENGTH OF J-K, E-O, I-L.

END VERTICAL(S) MUST BE SHEATHED OR HAVE BRACES AS INDICATED IN THE MAX. UNBRACED LENGTH COLUMN OF THE TABLE BELOW

LOADING

TOTAL LOAD CASES: (4)

CHORDS

MEMB. FR-TO	MAX. FACTORED FORCE (LBS)	FACTORED VERT. LOAD LC1 (PLF) FROM	TO	MAX CSI (LC)	MAX. UNBRAC LENGTH
A- B	0 / 42	-84.9	-84.9	0.12 (1)	10.00
B- C	0 / 25	-84.9	-84.9	0.19 (1)	10.00
C- D	-1031 / 0	-84.9	-84.9	0.21 (1)	5.93
D- E	-826 / 0	-84.9	-84.9	0.20 (1)	6.25
E- F	-1049 / 0	-84.9	-84.9	0.29 (1)	5.75
F- G	-1055 / 0	-84.9	-84.9	0.38 (1)	5.63
G- H	-1055 / 0	-84.9	-84.9	0.38 (1)	5.63
H- I	-572 / 0	-84.9	-84.9	0.33 (1)	6.25
I- J	-197 / 0	-84.9	-84.9	0.13 (1)	6.25
K- J	-1215 / 0	0.0	0.0	0.50 (1)	5.81
Q- B	-240 / 0	0.0	0.0	0.03 (1)	7.81
Q- P	0 / 745	-18.5	-18.5	0.29 (4)	10.00
P- O	0 / 710	-18.5	-18.5	0.29 (4)	10.00
O- N	0 / 1151	-18.5	-18.5	0.20 (1)	10.00
N- M	0 / 587	-18.5	-18.5	0.28 (4)	10.00
M- L	0 / 258	-18.5	-18.5	0.05 (1)	10.00
L- K	0 / 0	-18.5	-18.5	0.01 (4)	10.00

WEBS

MEMB. FR-TO	MAX. FACTORED FORCE (LBS)	MAX CSI (LC)
P- D	0 / 188	0.05 (4)
D- O	0 / 271	0.06 (1)
O- E	-1020 / 0	0.58 (1)
E- N	0 / 816	0.18 (1)
N- F	-401 / 0	0.38 (1)
N- H	0 / 694	0.16 (1)
M- H	-1033 / 0	0.98 (1)
M- I	0 / 1351	0.30 (1)
L- I	-1235 / 0	0.70 (1)
L- J	0 / 1103	0.25 (1)
Q- C	-1288 / 0	0.94 (1)
C- P	-63 / 19	0.05 (1)

DESIGN CRITERIA

SPECIFIED LOADS:

TOP CH.	LL	=	23.3	PSF
	DL	=	6.0	PSF
BOT CH.	LL	=	0.0	PSF
	DL	=	7.4	PSF
TOTAL LOAD		=	36.7	PSF

SPACING = 24.0 IN. C/C

LOADING IN FLAT SECTION BASED ON A SLOPE OF 2.00/12 MINIMUM

THIS TRUSS IS DESIGNED FOR RESIDENTIAL OR SMALL BUILDING REQUIREMENTS OF PART 9, NBCC 2010, NBCC 2015

THIS DESIGN COMPLIES WITH:
- PART 9 OF BCBC 2018 , OBC 2012 , ABC 2019
- CSA 086-09, CSA 086-14
- TPIC 2011, TPIC 2014

(55 % OF 27.2 P.S.F. G.S.L. PLUS 8.4 P.S.F. RAIN LOAD) EQUALS 23.3 P.S.F. SPECIFIED ROOF LIVE LOAD

ALLOWABLE DEFL.(LL)= L/360 (0.79")
CALCULATED VERT. DEFL.(LL) = L/ 999 (0.07")
ALLOWABLE DEFL.(TL)= L/360 (0.79")
CALCULATED VERT. DEFL.(TL) = L/ 999 (0.20")

CSI: TC=0.50/1.00 (J-K:1) , BC=0.29/1.00 (O-P:4) , WB=0.98/1.00 (H-M:1) , SSI=0.21/1.00 (F-H:1)

DOL LUMBER=1.00 NAIL=1.00 LS BEND=1.10 COMP=1.10 SHEAR=1.10 TENS= 1.10

COMPANION LIVE LOAD FACTOR = 1.00

AUTOSOLVE RIGHT HEEL ONLY

TRUSS PLATE MANUFACTURER IS NOT RESPONSIBLE FOR QUALITY CONTROL IN THE TRUSS MANUFACTURING PLANT .

NAIL VALUES

PLATE	GRIP(DRY) (PSI) MAX	MIN	SHEAR (PLI) MAX	MIN	SECTION (PLI) MAX	MIN
MT20	618	354	1667	788	1987	1656

PLATE PLACEMENT TOL. = 0.250 inches

PLATE ROTATION TOL. = 5.0 Deg.

JSI GRIP= 0.89 (Q) (INPUT = 0.90)
JSI METAL= 0.48 (C) (INPUT = 1.00)

JOB NAME	TRUSS NAME	QUANTITY	PLY	JOB DESC.	DRWG NO.
314237	H5T		1	TRUSS DESC. JT-39002	E-19112585

Alpa Roof Truss, Maple

Version 8.300 S Aug 9 2019 MiTek Industries, Inc. Mon Nov 11 14:29:00 2019 Page 1
ID:1djR6DYvLvlIXkyExRWgN1yQawr-e8aj6YR2f2sJd?NpFSEUgln7_K3zpxklCql0e?yKEs1

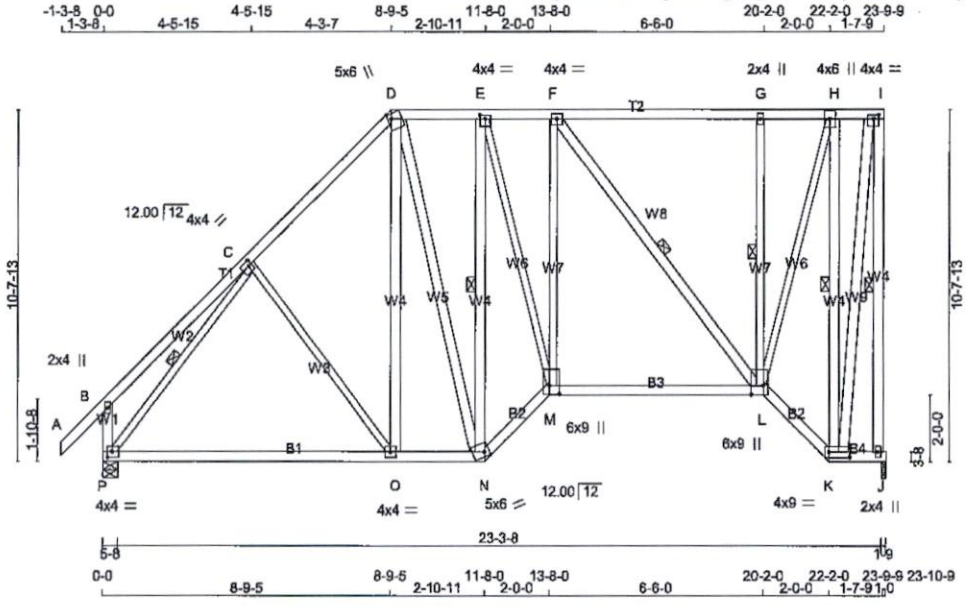

LUMBER
N. L. G. A. RULES

CHORDS	SIZE		LUMBER	DESCR.
A - D	2x4	DRY	No.2	SPF
D - I	2x4	DRY	No.2	SPF
J - I	2x4	DRY	No.2	SPF
P - B	2x4	DRY	No.2	SPF
P - N	2x4	DRY	No.2	SPF
N - M	2x4	DRY	No.2	SPF
M - L	2x4	DRY	No.2	SPF
L - K	2x4	DRY	No.2	SPF
K - J	2x4	DRY	No.2	SPF
ALL WEBS	2x4	DRY	No.2	SPF
EXCEPT				
C - O	2x3	DRY	No.2	SPF
E - M	2x3	DRY	No.2	SPF
M - F	2x3	DRY	No.2	SPF
L - G	2x3	DRY	No.2	SPF
L - H	2x3	DRY	No.2	SPF
P - C	2x3	DRY	No.2	SPF

DRY: SEASONED LUMBER.

PLATES (table is in inches)

JT	TYPE	PLATES	W	LEN	Y	X
B	TMV+p	MT20	2.0	4.0		
C	TMWW-t	MT20	4.0	4.0	1.75	1.25
D	TTWW+m	MT20	5.0	6.0	2.00	1.25
E	TMWW-t	MT20	4.0	4.0	1.50	2.00
F	TMWW-t	MT20	4.0	4.0		
G	TMW+w	MT20	2.0	4.0		
H	TMWW+t	MT20	4.0	6.0		
I	TMVW-t	MT20	4.0	4.0	1.50	1.75
J	BMV1+p	MT20	2.0	4.0		
K	BBWW-l	MT20	4.0	9.0	2.00	7.50
L	BBWWW+p	MT20	6.0	9.0	3.25	4.25
M	BBWW+p	MT20	6.0	9.0	3.25	3.75
N	BBWW-m	MT20	5.0	6.0	1.75	1.75
O	BMWW-t	MT20	4.0	4.0		
P	BMVW1-t	MT20	4.0	4.0	2.00	1.75

NOTE: Lateral brace(s) shown shall be 2x4 SPF #2

LICENSED PROFESSIONAL ENGINEER
11/11/2019
R. TURENNE
100157040
PROVINCE OF ONTARIO

DIMENSIONS, SUPPORTS AND LOADINGS SPECIFIED BY FABRICATOR TO BE VERIFIED BY BUILDING DESIGNER

BEARINGS

JT	FACTORED GROSS REACTION VERT	HORZ	MAXIMUM FACTORED GROSS REACTION DOWN	HORZ	UPLIFT	INPUT BRG IN-SX	REQRD BRG IN-SX
J	1230	0	1230	0	0	1-9	1-8
P	1348	0	1348	0	0	5-8	1-8

UNFACTORED REACTIONS

JT	1ST LCASE COMBINED	MAX./MIN. COMPONENT REACTIONS SNOW	LIVE	PERM.LIVE	WIND	DEAD	SOIL
J	873	554 / 0	0 / 0	0 / 0	0 / 0	319 / 0	0 / 0
P	955	619 / 0	0 / 0	0 / 0	0 / 0	336 / 0	0 / 0

BEARING MATERIAL TO BE SPF NO.2 OR BETTER AT JOINT(S) J, P

BRACING
TOP CHORD TO BE SHEATHED OR MAX. PURLIN SPACING = 5.91 FT.
MAX. UNBRACED BOTTOM CHORD LENGTH = 10.00 FT OR RIGID CEILING DIRECTLY APPLIED.

ALL PITCH BREAKS AND PERIMETER CORNER JOINTS MUST BE LATERALLY RESTRAINED.

1 LATERAL BRACE(S) AT 1/ 2 LENGTH OF I-J, E-N, F-L, G-L, H-K, C-P.

END VERTICAL(S) MUST BE SHEATHED OR HAVE BRACES AS INDICATED IN THE MAX. UNBRACED LENGTH COLUMN OF THE TABLE BELOW

LOADING
TOTAL LOAD CASES: (4)

CHORDS

MEMB. FR-TO	MAX. FACTORED FORCE (LBS)	FACTORED VERT. LOAD LC1 (PLF) FROM	TO	MAX CSI (LC)	MAX. UNBRAC LENGTH
A- B	0 / 42	-84.9	-84.9	0.12 (1)	10.00
B- C	0 / 31	-84.9	-84.9	0.27 (1)	10.00
C- D	-981 / 0	-84.9	-84.9	0.30 (1)	5.91
D- E	-711 / 0	-84.9	-84.9	0.11 (1)	6.25
E- F	-884 / 0	-84.9	-84.9	0.32 (1)	6.07
F- G	-485 / 0	-84.9	-84.9	0.32 (1)	6.25
G- H	-479 / 0	-84.9	-84.9	0.31 (1)	6.25
H- I	-173 / 0	-84.9	-84.9	0.11 (1)	6.25
J- I	-1215 / 0	0.0	0.0	0.69 (1)	5.81
P- B	-258 / 0	0.0	0.0	0.03 (1)	7.81
P- O	0 / 757	-18.5	-18.5	0.39 (4)	10.00
O- N	0 / 673	-18.5	-18.5	0.39 (4)	10.00
N- M	0 / 988	-18.5	-18.5	0.17 (1)	10.00
M- L	0 / 883	-18.5	-18.5	0.31 (4)	10.00
L- K	0 / 221	-18.5	-18.5	0.05 (1)	10.00
K- J	0 / 0	-18.5	-18.5	0.01 (4)	10.00

WEBS

MEMB. FR-TO	MAX. FACTORED FORCE (LBS)	MAX CSI (LC)
C- O	-142 / 0	0.16 (1)
O- D	0 / 278	0.05 (4)
D- N	0 / 136	0.02 (1)
N- E	-828 / 0	0.47 (1)
E- M	0 / 742	0.17 (1)
M- F	0 / 97	0.03 (4)
F- L	-654 / 0	0.38 (1)
L- G	-499 / 0	0.24 (1)
L- H	0 / 1293	0.29 (1)
K- H	-1220 / 0	0.70 (1)
K- I	0 / 1111	0.18 (1)
P- C	-1272 / 0	0.45 (1)

DESIGN CRITERIA

SPECIFIED LOADS:

TOP CH.	LL =	23.3	PSF
	DL =	6.0	PSF
BOT CH.	LL =	0.0	PSF
	DL =	7.4	PSF
TOTAL LOAD	=	36.7	PSF

SPACING = 24.0 IN. C/C

LOADING IN FLAT SECTION BASED ON A SLOPE OF 2.00/12 MINIMUM

THIS TRUSS IS DESIGNED FOR RESIDENTIAL OR SMALL BUILDING REQUIREMENTS OF PART 9, NBCC 2010, NBCC 2015

THIS DESIGN COMPLIES WITH:
- PART 9 OF BCBC 2018 , OBC 2012 , ABC 2019
- CSA 086-09, CSA 086-14
- TPIC 2011, TPIC 2014

(55 % OF 27.2 P.S.F. G.S.L. PLUS 8.4 P.S.F. RAIN LOAD) EQUALS 23.3 P.S.F. SPECIFIED ROOF LIVE LOAD

ALLOWABLE DEFL.(LL)= L/360 (0.79")
CALCULATED VERT. DEFL.(LL) = L/ 999 (0.06")
ALLOWABLE DEFL.(TL)= L/360 (0.79")
CALCULATED VERT. DEFL.(TL) = L/ 999 (0.20")

CSI: TC=0.69/1.00 (I-J:1) , BC=0.39/1.00 (N-O:4) , WB=0.70/1.00 (H-K:1) , SSI=0.21/1.00 (F-G:1)

DOL LUMBER=1.00 NAIL=1.00 LS BEND=1.10 COMP=1.10 SHEAR=1.10 TENS= 1.10

COMPANION LIVE LOAD FACTOR = 1.00

TRUSS PLATE MANUFACTURER IS NOT RESPONSIBLE FOR QUALITY CONTROL IN THE TRUSS MANUFACTURING PLANT .

NAIL VALUES

PLATE	GRIP(DRY) (PSI) MAX	MIN	SHEAR (PLI) MAX	MIN	SECTION (PLI) MAX	MIN
MT20	618	354	1667	788	1987	1656

PLATE PLACEMENT TOL. = 0.250 inches

PLATE ROTATION TOL. = 5.0 Deg.

JSI GRIP= 0.89 (H) (INPUT = 0.90)
JSI METAL= 0.48 (C) (INPUT = 1.00)

JOB NAME	TRUSS NAME	QUANTITY	PLY	JOB DESC.	DRWG NO.
314233	J01T		1	TRUSS DESC. JT-39002	E-19112509

Alpa Roof Truss, Maple

Version 8.300 S Aug 9 2019 MiTek Industries, Inc. Fri Nov 8 12:09:33 2019 Page 1

ID:VRLqmclDiflZCj2mk6F92VyQuye-PedLg6Kg34EyrhyaL6P1sHTzGSwDvwrmGAw1?4yLGAm

Scale = 1:33.7

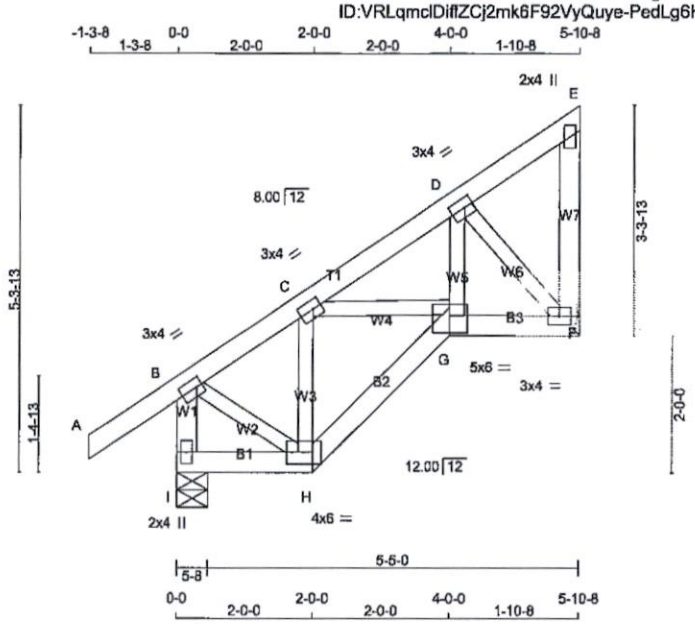

TOTAL WEIGHT = 7 X 30 = 209 lb

[M]

LUMBER

N. L. G. A. RULES

CHORDS	SIZE		LUMBER	DESCR.
I - B	2x4	DRY	No.2	SPF
A - E	2x4	DRY	No.2	SPF
F - E	2x4	DRY	No.2	SPF
I - H	2x4	DRY	No.2	SPF
H - G	2x4	DRY	No.2	SPF
G - F	2x4	DRY	No.2	SPF
ALL WEBS	2x3	DRY	No.2	SPF

DRY: SEASONED LUMBER.

PLATES (table is in inches)

JT	TYPE	PLATES	W	LEN	Y	X
B	TMWW-t	MT20	3.0	4.0	1.50	1.00
C	TMWW-t	MT20	3.0	4.0	1.50	1.50
D	TMWW-t	MT20	3.0	4.0	1.50	1.50
E	TMV+p	MT20	2.0	4.0		
F	BMVW1-t	MT20	3.0	4.0		
G	BBWW-l	MT20	5.0	6.0	3.00	3.00
H	BBWW-l	MT20	4.0	6.0	2.00	4.50
I	BMV1+p	MT20	2.0	4.0		

NOTE: Lateral brace(s) shown shall be 2x4 SPF #2

LICENSED PROFESSIONAL ENGINEER
11/08/2019
R. TURENNE
100157040
PROVINCE OF ONTARIO

DIMENSIONS, SUPPORTS AND LOADINGS SPECIFIED BY FABRICATOR TO BE VERIFIED BY BUILDING DESIGNER

BEARINGS

JT	FACTORED GROSS REACTION VERT	HORZ	MAXIMUM FACTORED GROSS REACTION DOWN	HORZ	UPLIFT	INPUT BRG	REQRD BRG
I	434	0	434	0	0	5-8	1-8
F	290	0	290	0	0	MECHANICAL	

A SUITABLE HANGER/MECHANICAL CONNECTION IS REQUIRED AT JOINT F. MINIMUM BEARING LENGTH AT JOINT F = 1-8.

UNFACTORED REACTIONS

JT	1ST LCASE COMBINED	MAX./MIN. COMPONENT REACTIONS SNOW	LIVE	PERM.LIVE	WIND	DEAD	SOIL
I	305	208 / 0	0 / 0	0 / 0	0 / 0	97 / 0	0 / 0
F	206	129 / 0	0 / 0	0 / 0	0 / 0	77 / 0	0 / 0

BEARING MATERIAL TO BE SPF NO.2 OR BETTER AT JOINT(S) I

BRACING

TOP CHORD TO BE SHEATHED OR MAX. PURLIN SPACING = 6.25 FT.
MAX. UNBRACED BOTTOM CHORD LENGTH = 10.00 FT OR RIGID CEILING DIRECTLY APPLIED.

ALL PITCH BREAKS AND PERIMETER CORNER JOINTS MUST BE LATERALLY RESTRAINED.

LOADING

TOTAL LOAD CASES: (4)

CHORDS

MEMB. FR-TO	MAX. FACTORED FORCE (LBS)	FACTORED VERT. LOAD LC1 (PLF) FROM	TO	MAX CSI (LC)	MAX. UNBRAC LENGTH
I- B	-415 / 0	0.0	0.0	0.04 (1)	7.81
A- B	0 / 32	-84.9	-84.9	0.11 (1)	10.00
B- C	-204 / 0	-84.9	-84.9	0.11 (1)	6.25
C- D	-264 / 0	-84.9	-84.9	0.05 (1)	6.25
D- E	-11 / 0	-84.9	-84.9	0.05 (1)	6.25
F- E	-56 / 0	0.0	0.0	0.01 (1)	7.81
I- H	0 / 0	-18.5	-18.5	0.02 (4)	10.00
H- G	0 / 204	-18.5	-18.5	0.05 (1)	10.00
G- F	0 / 215	-18.5	-18.5	0.05 (1)	10.00

WEBS

MEMB. FR-TO	MAX. FACTORED FORCE (LBS)	MAX CSI (LC)
B- H	0 / 173	0.04 (1)
H- C	-188 / 0	0.03 (1)
C- G	0 / 81	0.02 (1)
G- D	0 / 172	0.04 (1)
D- F	-308 / 0	0.05 (1)

DESIGN CRITERIA

SPECIFIED LOADS:

TOP CH.	LL	=	23.3	PSF
	DL	=	6.0	PSF
BOT CH.	LL	=	0.0	PSF
	DL	=	7.4	PSF
TOTAL LOAD		=	36.7	PSF

SPACING = 24.0 IN. C/C

THIS TRUSS IS DESIGNED FOR RESIDENTIAL OR SMALL BUILDING REQUIREMENTS OF PART 9, NBCC 2010, NBCC 2015

THIS DESIGN COMPLIES WITH:
- PART 9 OF BCBC 2018 , OBC 2012 , ABC 2019
- CSA 086-09, CSA 086-14
- TPIC 2011, TPIC 2014

DESIGN ASSUMPTIONS
-OVERHANG NOT TO BE ALTERED OR CUT OFF.

(55 % OF 27.2 P.S.F. G.S.L. PLUS 8.4 P.S.F. RAIN LOAD) EQUALS 23.3 P.S.F. SPECIFIED ROOF LIVE LOAD

ALLOWABLE DEFL.(LL)= L/360 (0.20")
CALCULATED VERT. DEFL.(LL) = L/ 999 (0.00")
ALLOWABLE DEFL.(TL)= L/360 (0.20")
CALCULATED VERT. DEFL.(TL) = L/ 999 (0.01")

CSI: TC=0.11/1.00 (A-B:1) , BC=0.05/1.00 (F-G:1) , WB=0.05/1.00 (D-F:1) , SSI=0.08/1.00 (A-B:1)

DOL LUMBER=1.00 NAIL=1.00 LS BEND=1.10 COMP=1.10 SHEAR=1.10 TENS= 1.10

COMPANION LIVE LOAD FACTOR = 1.00

TRUSS PLATE MANUFACTURER IS NOT RESPONSIBLE FOR QUALITY CONTROL IN THE TRUSS MANUFACTURING PLANT .

NAIL VALUES

PLATE	GRIP(DRY) (PSI) MAX	MIN	SHEAR (PLI) MAX	MIN	SECTION (PLI) MAX	MIN
MT20	618	354	1667	788	1987	1656

PLATE PLACEMENT TOL. = 0.250 inches

PLATE ROTATION TOL. = 5.0 Deg.

JSI GRIP= 0.56 (B) (INPUT = 0.90)
JSI METAL= 0.12 (B) (INPUT = 1.00)

JOB NAME	TRUSS NAME	QUANTITY	PLY	JOB DESC.	DRWG NO.
310385	H2		1	TRUSS DESC. JT-39002	E-19072227

Alpa Roof Truss, Maple

Version 8.300 S May 10 2019 MiTek Industries, Inc. Wed Jul 10 10:24:21 2019 Page 1
ID:MF8liriaTok7DlbpT4B71Xys4PG-_8qg8xPHXxCPnIod8hKid9vCSL?JH2LHmbuOBMyzW1e

Scale = 1:42.5

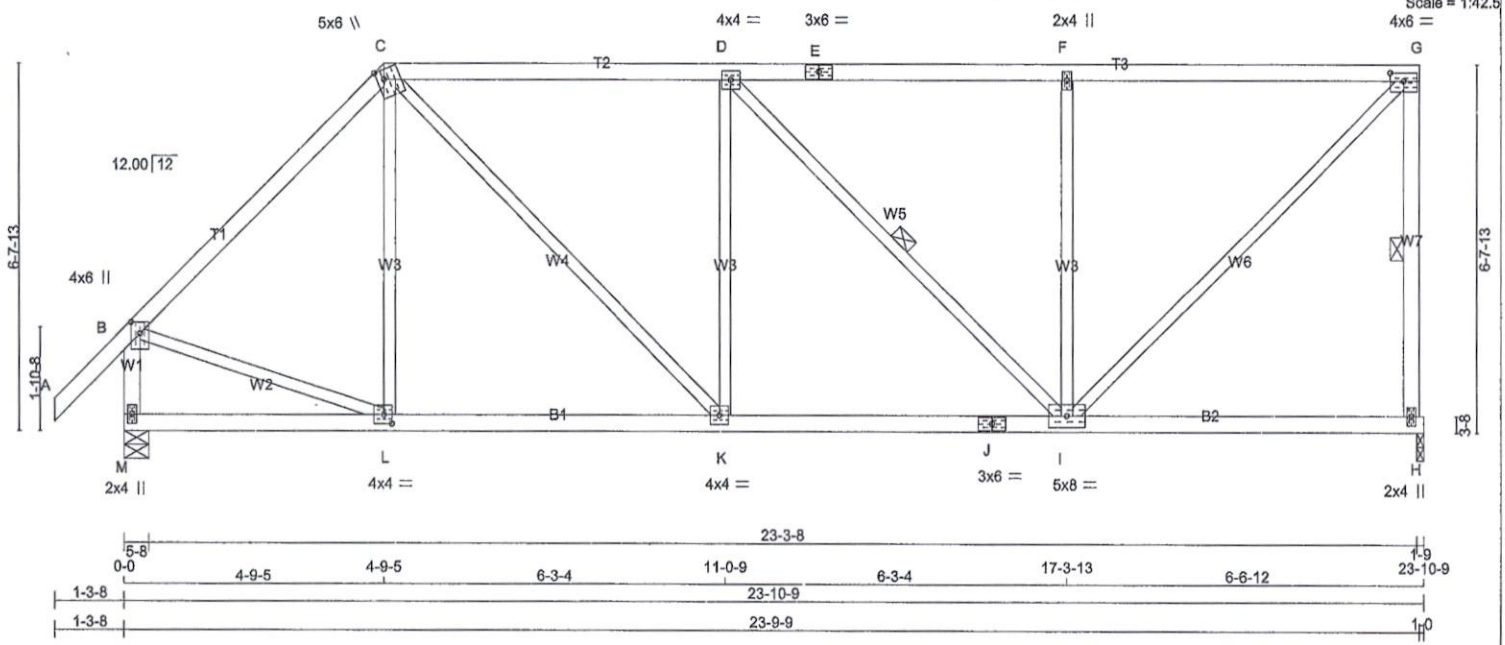

TOTAL WEIGHT = 4 X 107 = 429 lb

[M]

LUMBER

N. L. G. A. RULES

CHORDS	SIZE		LUMBER	DESCR.
A - C	2x4	DRY	No.2	SPF
C - E	2x4	DRY	No.2	SPF
E - G	2x4	DRY	No.2	SPF
H - G	2x4	DRY	No.2	SPF
M - B	2x4	DRY	No.2	SPF
M - J	2x4	DRY	No.2	SPF
J - H	2x4	DRY	No.2	SPF
ALL WEBS EXCEPT	2x3	DRY	No.2	SPF

DRY: SEASONED LUMBER.

PLATES (table Is In Inches)

JT	TYPE	PLATES	W	LEN	Y	X
B	TMVW+p	MT20	4.0	6.0	2.50	2.00
C	TTWW+m	MT20	5.0	6.0	2.00	1.50
D	TMWW-t	MT20	4.0	4.0		
E	TS-t	MT20	3.0	6.0		
F	TMW+w	MT20	2.0	4.0		
G	TMVW-t	MT20	4.0	6.0	1.75	3.00
H	BMV1+p	MT20	2.0	4.0		
I	BMWWW-t	MT20	5.0	8.0		
J	BS-t	MT20	3.0	6.0		
K	BMWW-t	MT20	4.0	4.0		
L	BMWW-t	MT20	4.0	4.0	2.00	1.75
M	BMV1+p	MT20	2.0	4.0		

NOTES- (1)

NOTE: Lateral brace(s) shown shall be 2x4 SPF #2

LICENSED PROFESSIONAL ENGINEER
07/10/2019
R. TURENNE
100157040
PROVINCE OF ONTARIO

DIMENSIONS, SUPPORTS AND LOADINGS SPECIFIED BY FABRICATOR TO BE VERIFIED BY BUILDING DESIGNER

BEARINGS

JT	FACTORED GROSS REACTION VERT	HORZ	MAXIMUM FACTORED GROSS REACTION DOWN	HORZ	UPLIFT	INPUT BRG IN-SX	REQRD BRG IN-SX
H	1230	0	1230	0	0	1-9	1-8
M	1348	0	1348	0	0	5-8	2-0

UNFACTORED REACTIONS

JT	1ST LCASE COMBINED	SNOW	MAX./MIN. COMPONENT REACTIONS LIVE	PERM.LIVE	WIND	DEAD	SOIL
H	873	554 / 0	0 / 0	0 / 0	0 / 0	319 / 0	0 / 0
M	955	619 / 0	0 / 0	0 / 0	0 / 0	336 / 0	0 / 0

BEARING MATERIAL TO BE SPF NO.2 OR BETTER AT JOINT(S) H, M

BRACING

TOP CHORD TO BE SHEATHED OR MAX. PURLIN SPACING = 5.14 FT.
MAX. UNBRACED BOTTOM CHORD LENGTH = 10.00 FT OR RIGID CEILING DIRECTLY APPLIED.

ALL PITCH BREAKS AND PERIMETER CORNER JOINTS MUST BE LATERALLY RESTRAINED.

1 LATERAL BRACE(S) AT 1/ 2 LENGTH OF G-H, D-I.

END VERTICAL(S) MUST BE SHEATHED OR HAVE BRACES AS INDICATED IN THE MAX. UNBRACED LENGTH COLUMN OF THE TABLE BELOW

LOADING

TOTAL LOAD CASES: (4)

CHORDS

MEMB. FR-TO	MAX. FACTORED FORCE (LBS)	FACTORED VERT. LOAD LC1 (PLF) FROM	TO	MAX CSI (LC)	MAX. UNBRAC LENGTH
A- B	0 / 42	-84.9	-84.9	0.12 (1)	10.00
B- C	-1069 / 0	-84.9	-84.9	0.39 (1)	5.60
C- D	-1203 / 0	-84.9	-84.9	0.51 (1)	5.14
D- E	-977 / 0	-84.9	-84.9	0.52 (1)	5.53
E- F	-977 / 0	-84.9	-84.9	0.52 (1)	5.53
F- G	-977 / 0	-84.9	-84.9	0.52 (1)	5.53
H- G	-1181 / 0	0.0	0.0	0.24 (1)	5.87
M- B	-1315 / 0	0.0	0.0	0.15 (1)	7.05
M- L	0 / 0	-18.5	-18.5	0.13 (4)	10.00
L- K	0 / 752	-18.5	-18.5	0.20 (4)	10.00
K- J	0 / 1203	-18.5	-18.5	0.29 (1)	10.00
J- I	0 / 1203	-18.5	-18.5	0.29 (1)	10.00
I- H	0 / 0	-18.5	-18.5	0.18 (4)	10.00

WEBS

MEMB. FR-TO	MAX. FACTORED FORCE (LBS)	MAX CSI (LC)
L- C	-120 / 41	0.09 (1)
C- K	0 / 642	0.14 (1)
K- D	-345 / 0	0.25 (1)
D- I	-323 / 0	0.18 (1)
I- F	-596 / 0	0.44 (1)
I- G	0 / 1368	0.31 (1)
B- L	0 / 790	0.18 (1)

DESIGN CRITERIA

SPECIFIED LOADS:

TOP CH.	LL	=	23.3	PSF
	DL	=	6.0	PSF
BOT CH.	LL	=	0.0	PSF
	DL	=	7.4	PSF
TOTAL LOAD		=	36.7	PSF

SPACING = 24.0 IN. C/C

LOADING IN FLAT SECTION BASED ON A SLOPE OF 2.00/12 MINIMUM

THIS TRUSS IS DESIGNED FOR RESIDENTIAL OR SMALL BUILDING REQUIREMENTS OF PART 9, NBCC 2010, NBCC 2015

THIS DESIGN COMPLIES WITH:
- PART 9 OF BCBC 2018 , OBC 2012
- CSA 086-09, CSA 086-14
- TPIC 2011, TPIC 2014

(55 % OF 27.2 P.S.F. G.S.L. PLUS 8.4 P.S.F. RAIN LOAD) EQUALS 23.3 P.S.F. SPECIFIED ROOF LIVE LOAD

ALLOWABLE DEFL.(LL)= L/360 (0.79")
CALCULATED VERT. DEFL.(LL) = L/ 999 (0.04")
ALLOWABLE DEFL.(TL)= L/360 (0.79")
CALCULATED VERT. DEFL.(TL) = L/ 999 (0.09")

CSI: TC=0.52/1.00 (F-G:1) , BC=0.29/1.00 (I-K:1) , WB=0.44/1.00 (F-I:1) , SSI=0.26/1.00 (F-G:1)

DOL LUMBER=1.00 NAIL=1.00 LS BEND=1.10 COMP=1.10 SHEAR=1.10 TENS= 1.10

COMPANION LIVE LOAD FACTOR = 1.00

TRUSS PLATE MANUFACTURER IS NOT RESPONSIBLE FOR QUALITY CONTROL IN THE TRUSS MANUFACTURING PLANT .

NAIL VALUES

PLATE	GRIP(DRY) (PSI) MAX	MIN	SHEAR (PLI) MAX	MIN	SECTION (PLI) MAX	MIN
MT20	618	354	1667	788	1987	1656

PLATE PLACEMENT TOL. = 0.250 Inches

PLATE ROTATION TOL. = 5.0 Deg.

JSI GRIP= 0.80 (L) (INPUT = 0.90)
JSI METAL= 0.48 (B) (INPUT = 1.00)

JOB NAME	TRUSS NAME	QUANTITY	PLY	JOB DESC.		DRWG NO.
310385	H3		1	TRUSS DESC.	JT-39002	E-19072228

Alpa Roof Truss, Maple

Version 8.300 S May 10 2019 MiTek Industries, Inc. Wed Jul 10 10:24:22 2019 Page 1
ID:MF8liriaTok7DlbpT4B71Xys4PG-TKO2MHQvlFKGPSNplOrxAMRJQIlJ0WZQ?FeyjoyzW1d
Scale = 1:48.7

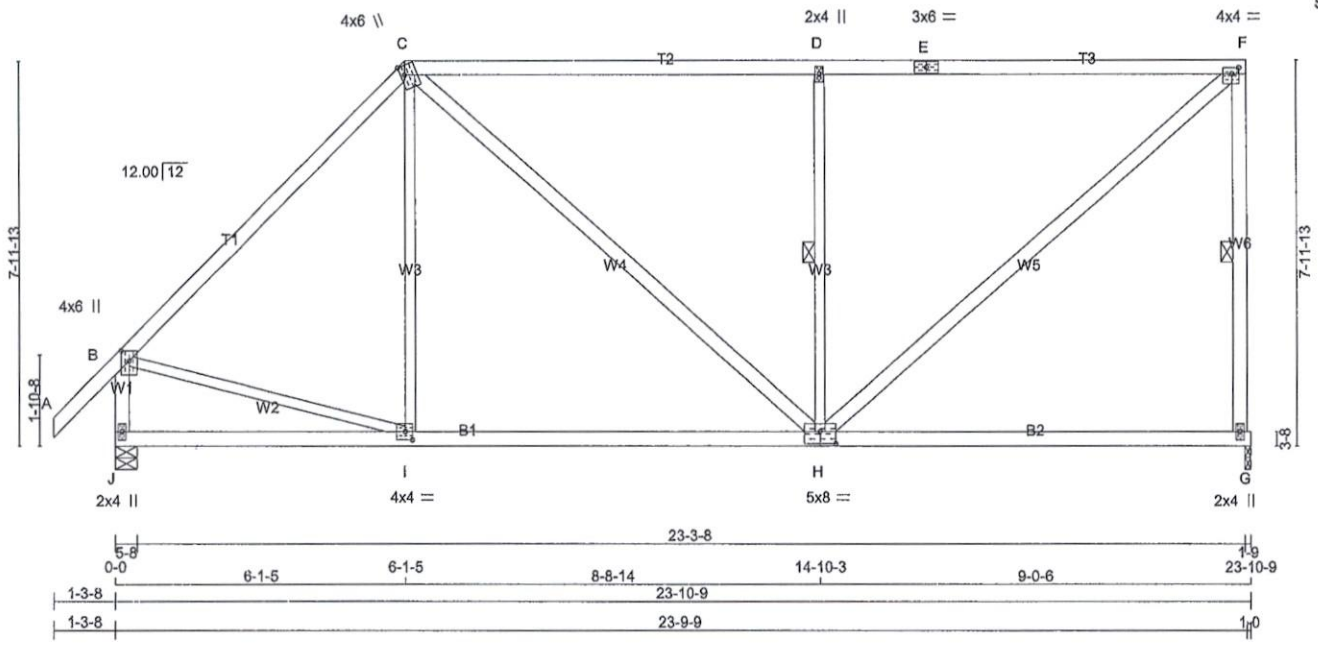

TOTAL WEIGHT = 4 X 112 = 450 lb

[M]

LUMBER

N. L. G. A. RULES

CHORDS	SIZE		LUMBER	DESCR.
A - C	2x4	DRY	2100F 1.8E	SPF
C - E	2x4	DRY	2100F 1.8E	SPF
E - F	2x4	DRY	2100F 1.8E	SPF
G - F	2x4	DRY	No.2	SPF
J - B	2x4	DRY	No.2	SPF
J - H	2x4	DRY	No.2	SPF
H - G	2x4	DRY	No.2	SPF
ALL WEBS	2x3	DRY	No.2	SPF
EXCEPT				
C - H	2x4	DRY	No.2	SPF
H - F	2x4	DRY	No.2	SPF

DRY: SEASONED LUMBER.

PLATES (table is in inches)

JT	TYPE	PLATES	W	LEN	Y	X
B	TMVW+p	MT20	4.0	6.0	2.50	2.00
C	TTWW+m	MT20	4.0	6.0	Edge	1.00
D	TMW+w	MT20	2.0	4.0		
E	TS-t	MT20	3.0	6.0		
F	TMVW-t	MT20	4.0	4.0	1.50	1.75
G	BMV1+p	MT20	2.0	4.0		
H	BSWWW-l	MT20	5.0	8.0	3.00	4.00
I	BMWW-t	MT20	4.0	4.0	2.00	1.75
J	BMV1+p	MT20	2.0	4.0		

Edge - INDICATES REFERENCE CORNER OF PLATE TOUCHES EDGE OF CHORD.

NOTES- (1)

NOTE: Lateral brace(s) shown shall be 2x4 SPF #2

LICENSED PROFESSIONAL ENGINEER
07/10/2019
R. TURENNE
100157040
PROVINCE OF ONTARIO

DIMENSIONS, SUPPORTS AND LOADINGS SPECIFIED BY FABRICATOR TO BE VERIFIED BY BUILDING DESIGNER

BEARINGS

JT	FACTORED GROSS REACTION VERT	HORZ	MAXIMUM FACTORED GROSS REACTION DOWN	HORZ	UPLIFT	INPUT BRG IN-SX	REQRD BRG IN-SX
G	1230	0	1230	0	0	1-9	1-8
J	1348	0	1348	0	0	5-8	2-0

UNFACTORED REACTIONS

JT	1ST LCASE COMBINED	MAX./MIN. COMPONENT REACTIONS SNOW	LIVE	PERM.LIVE	WIND	DEAD	SOIL
G	873	554 / 0	0 / 0	0 / 0	0 / 0	319 / 0	0 / 0
J	955	619 / 0	0 / 0	0 / 0	0 / 0	336 / 0	0 / 0

BEARING MATERIAL TO BE SPF NO.2 OR BETTER AT JOINT(S) G, J

BRACING

TOP CHORD TO BE SHEATHED OR MAX. PURLIN SPACING = 5.62 FT.
MAX. UNBRACED BOTTOM CHORD LENGTH = 10.00 FT OR RIGID CEILING DIRECTLY APPLIED.

ALL PITCH BREAKS AND PERIMETER CORNER JOINTS MUST BE LATERALLY RESTRAINED.

1 LATERAL BRACE(S) AT 1/ 2 LENGTH OF F-G, D-H.

END VERTICAL(S) MUST BE SHEATHED OR HAVE BRACES AS INDICATED IN THE MAX. UNBRACED LENGTH COLUMN OF THE TABLE BELOW

LOADING

TOTAL LOAD CASES: (4)

CHORDS

MEMB. FR-TO	MAX. FACTORED FORCE (LBS)	FACTORED VERT. LOAD (PLF) FROM	TO	LC1 MAX CSI (LC)	MAX. UNBRAC LENGTH
A- B	0 / 42	-84.9	-84.9	0.08 (1)	10.00
B- C	-1060 / 0	-84.9	-84.9	0.41 (1)	6.25
C- D	-999 / 0	-84.9	-84.9	0.82 (1)	5.62
D- E	-999 / 0	-84.9	-84.9	0.83 (1)	5.62
E- F	-999 / 0	-84.9	-84.9	0.83 (1)	5.62
G- F	-1147 / 0	0.0	0.0	0.33 (1)	5.94
J- B	-1312 / 0	0.0	0.0	0.15 (1)	7.06
J- I	0 / 0	-18.5	-18.5	0.32 (4)	10.00
I- H	0 / 748	-18.5	-18.5	0.39 (4)	10.00
H- G	0 / 0	-18.5	-18.5	0.43 (4)	10.00

WEBS

MEMB. FR-TO	MAX. FACTORED FORCE (LBS)	MAX CSI (LC)
I- C	-9 / 126	0.04 (4)
C- H	0 / 334	0.05 (1)
H- D	-932 / 0	0.37 (1)
H- F	0 / 1317	0.21 (1)
B- I	0 / 770	0.17 (1)

DESIGN CRITERIA

SPECIFIED LOADS:

TOP CH.	LL =	23.3	PSF
	DL =	6.0	PSF
BOT CH.	LL =	0.0	PSF
	DL =	7.4	PSF
TOTAL LOAD	=	36.7	PSF

SPACING = 24.0 IN. C/C

LOADING IN FLAT SECTION BASED ON A SLOPE OF 2.00/12 MINIMUM

THIS TRUSS IS DESIGNED FOR RESIDENTIAL OR SMALL BUILDING REQUIREMENTS OF PART 9, NBCC 2010, NBCC 2015

THIS DESIGN COMPLIES WITH:
- PART 9 OF BCBC 2018 , OBC 2012
- CSA 086-09, CSA 086-14
- TPIC 2011, TPIC 2014

(55 % OF 27.2 P.S.F. G.S.L. PLUS 8.4 P.S.F. RAIN LOAD) EQUALS 23.3 P.S.F. SPECIFIED ROOF LIVE LOAD

ALLOWABLE DEFL.(LL)= L/360 (0.79")
CALCULATED VERT. DEFL.(LL) = L/ 999 (0.03")
ALLOWABLE DEFL.(TL)= L/360 (0.79")
CALCULATED VERT. DEFL.(TL) = L/ 897 (0.32")

CSI: TC=0.83/1.00 (D-F:1) , BC=0.43/1.00 (G-H:4) , WB=0.37/1.00 (D-H:1) , SSI=0.37/1.00 (D-F:1)

DOL LUMBER=1.00 NAIL=1.00 LS BEND=1.10 COMP=1.10 SHEAR=1.10 TENS= 1.10

COMPANION LIVE LOAD FACTOR = 1.00

TRUSS PLATE MANUFACTURER IS NOT RESPONSIBLE FOR QUALITY CONTROL IN THE TRUSS MANUFACTURING PLANT .

NAIL VALUES

PLATE	GRIP(DRY) (PSI) MAX	MIN	SHEAR (PLI) MAX	MIN	SECTION (PLI) MAX	MIN
MT20	618	354	1667	788	1987	1656

PLATE PLACEMENT TOL. = 0.250 Inches

PLATE ROTATION TOL. = 5.0 Deg.

JSI GRIP= 0.86 (I) (INPUT = 0.90)
JSI METAL= 0.49 (B) (INPUT = 1.00)

JOB NAME	TRUSS NAME	QUANTITY	PLY	JOB DESC.	DRWG NO.
310385	H4		1	TRUSS DESC. JT-39002	E-19072229

Alpa Roof Truss, Maple

Version 8.300 S May 10 2019 MiTek Industries, Inc. Wed Jul 10 10:24:23 2019 Page 1
ID:MF8IirlaTok7DlbpT4B71Xys4PG-xWyRZdRX2ZS70cy?G6MAla_TL8eFlqAaEvNVFFyzW1c

Scale = 1:52.7

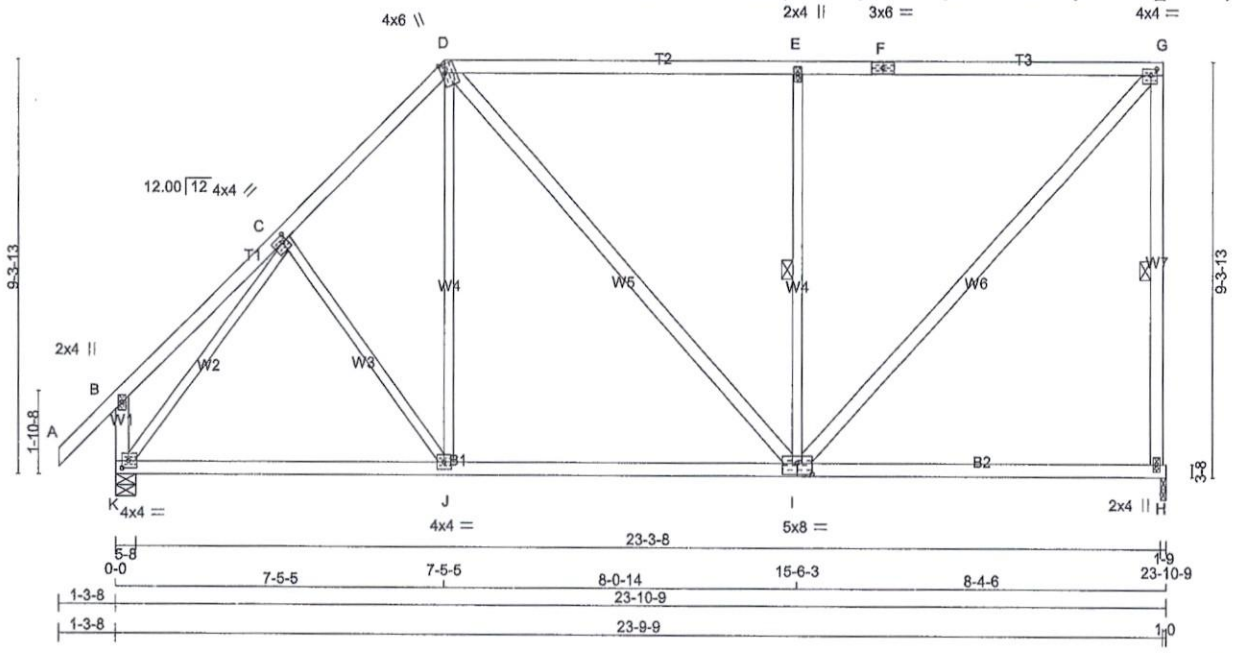

TOTAL WEIGHT = 4 X 123 = 491 lb

[M]

LUMBER

N. L. G. A. RULES

CHORDS	SIZE		LUMBER	DESCR.
A - D	2x4	DRY	No.2	SPF
D - F	2x4	DRY	1650F 1.5E	SPF
F - G	2x4	DRY	1650F 1.5E	SPF
H - G	2x4	DRY	No.2	SPF
K - B	2x4	DRY	No.2	SPF
K - I	2x4	DRY	No.2	SPF
I - H	2x4	DRY	No.2	SPF
ALL WEBS EXCEPT	2x3	DRY	No.2	SPF
D - I	2x4	DRY	No.2	SPF
I - G	2x4	DRY	No.2	SPF

DRY: SEASONED LUMBER.

PLATES (table is in inches)

JT	TYPE	PLATES	W	LEN	Y	X
B	TMV+p	MT20	2.0	4.0		
C	TMWW-t	MT20	4.0	4.0	1.75	1.25
D	TTWW+m	MT20	4.0	6.0	Edge	1.00
E	TMW+w	MT20	2.0	4.0		
F	TS-t	MT20	3.0	6.0		
G	TMVW-t	MT20	4.0	4.0	1.75	1.75
H	BMV1+p	MT20	2.0	4.0		
I	BSWWW-I	MT20	5.0	8.0	3.00	4.00
J	BMWW-t	MT20	4.0	4.0		
K	BMVW1-t	MT20	4.0	4.0	2.00	1.75

Edge - INDICATES REFERENCE CORNER OF PLATE TOUCHES EDGE OF CHORD.

NOTES- (1)

NOTE: Lateral brace(s) shown shall be 2x4 SPF #2

LICENSED PROFESSIONAL ENGINEER
07/10/2019
R. TURENNE
100157040
PROVINCE OF ONTARIO

DIMENSIONS, SUPPORTS AND LOADINGS SPECIFIED BY FABRICATOR TO BE VERIFIED BY BUILDING DESIGNER

BEARINGS

JT	FACTORED GROSS REACTION VERT	HORZ	MAXIMUM FACTORED GROSS REACTION DOWN	HORZ	UPLIFT	INPUT BRG IN-SX	REQRD BRG IN-SX
H	1230	0	1230	0	0	1-9	1-8
K	1348	0	1348	0	0	5-8	1-8

UNFACTORED REACTIONS

JT	1ST LCASE COMBINED	MAX./MIN. COMPONENT REACTIONS SNOW	LIVE	PERM.LIVE	WIND	DEAD	SOIL
H	873	554 / 0	0 / 0	0 / 0	0 / 0	319 / 0	0 / 0
K	955	619 / 0	0 / 0	0 / 0	0 / 0	336 / 0	0 / 0

BEARING MATERIAL TO BE SPF NO.2 OR BETTER AT JOINT(S) H, K

BRACING

TOP CHORD TO BE SHEATHED OR MAX. PURLIN SPACING = 5.35 FT.
MAX. UNBRACED BOTTOM CHORD LENGTH = 10.00 FT OR RIGID CEILING DIRECTLY APPLIED.

ALL PITCH BREAKS AND PERIMETER CORNER JOINTS MUST BE LATERALLY RESTRAINED.

1 LATERAL BRACE(S) AT 1/ 2 LENGTH OF G-H, E-I.

END VERTICAL(S) MUST BE SHEATHED OR HAVE BRACES AS INDICATED IN THE MAX. UNBRACED LENGTH COLUMN OF THE TABLE BELOW

LOADING

TOTAL LOAD CASES: (4)

CHORDS

MEMB. FR-TO	MAX. FACTORED FORCE (LBS)	FACTORED VERT. LOAD LC1 (PLF) FROM	TO	MAX CSI (LC)	MAX. UNBRAC LENGTH
A- B	0 / 42	-84.9	-84.9	0.12 (1)	10.00
B- C	0 / 26	-84.9	-84.9	0.19 (1)	10.00
C- D	-1037 / 0	-84.9	-84.9	0.21 (1)	5.91
D- E	-813 / 0	-84.9	-84.9	0.88 (1)	5.35
E- F	-813 / 0	-84.9	-84.9	0.88 (1)	5.35
F- G	-813 / 0	-84.9	-84.9	0.88 (1)	5.35
H- G	-1153 / 0	0.0	0.0	0.47 (1)	5.93
K- B	-238 / 0	0.0	0.0	0.03 (1)	7.81
K- J	0 / 748	-18.5	-18.5	0.39 (4)	10.00
J- I	0 / 715	-18.5	-18.5	0.39 (4)	10.00
I- H	0 / 0	-18.5	-18.5	0.37 (4)	10.00

WEBS

MEMB. FR-TO	MAX. FACTORED FORCE (LBS)	MAX CSI (LC)
C- J	-60 / 21	0.05 (1)
J- D	0 / 226	0.06 (4)
D- I	0 / 147	0.02 (1)
I- E	-862 / 0	0.49 (1)
I- G	0 / 1203	0.19 (1)
K- C	-1296 / 0	0.93 (1)

DESIGN CRITERIA

SPECIFIED LOADS:

TOP CH.	LL =	23.3	PSF
	DL =	6.0	PSF
BOT CH.	LL =	0.0	PSF
	DL =	7.4	PSF
TOTAL LOAD	=	36.7	PSF

SPACING = 24.0 IN. C/C

LOADING IN FLAT SECTION BASED ON A SLOPE OF 2.00/12 MINIMUM

THIS TRUSS IS DESIGNED FOR RESIDENTIAL OR SMALL BUILDING REQUIREMENTS OF PART 9, NBCC 2010, NBCC 2015

THIS DESIGN COMPLIES WITH:
- PART 9 OF BCBC 2018 , OBC 2012
- CSA 086-09, CSA 086-14
- TPIC 2011, TPIC 2014

(55 % OF 27.2 P.S.F. G.S.L. PLUS 8.4 P.S.F. RAIN LOAD) EQUALS 23.3 P.S.F. SPECIFIED ROOF LIVE LOAD

ALLOWABLE DEFL.(LL)= L/360 (0.79")
CALCULATED VERT. DEFL.(LL) = L/ 999 (0.03")
ALLOWABLE DEFL.(TL)= L/360 (0.79")
CALCULATED VERT. DEFL.(TL) = L/ 999 (0.24")

CSI: TC=0.88/1.00 (E-G:1) , BC=0.39/1.00 (I-J:4) , WB=0.93/1.00 (C-K:1) , SSI=0.34/1.00 (E-G:1)

DOL LUMBER=1.00 NAIL=1.00 LS BEND=1.10 COMP=1.10 SHEAR=1.10 TENS= 1.10

COMPANION LIVE LOAD FACTOR = 1.00

TRUSS PLATE MANUFACTURER IS NOT RESPONSIBLE FOR QUALITY CONTROL IN THE TRUSS MANUFACTURING PLANT .

NAIL VALUES

PLATE	GRIP(DRY) (PSI) MAX	MIN	SHEAR (PLI) MAX	MIN	SECTION (PLI) MAX	MIN
MT20	618	354	1667	788	1987	1656

PLATE PLACEMENT TOL. = 0.250 Inches

PLATE ROTATION TOL. = 5.0 Deg.

JSI GRIP= 0.89 (K) (INPUT = 0.90)
JSI METAL= 0.48 (C) (INPUT = 1.00)

JOB NAME	TRUSS NAME	QUANTITY	PLY	JOB DESC.		DRWG NO.
310385	H5		1	TRUSS DESC.	JT-39002	E-19072230

Alpa Roof Truss, Maple

Version 8.300 S May 10 2019 MiTek Industries, Inc. Thu Jul 11 09:24:40 2019 Page 1
ID:MF8iiriaTok7DlbpT4B71Xys4PG-a9ag2dhkX4XM9pdmHff3j?WIOB_jQTkWz5JJUYyzBpb
Scale = 1:60.1

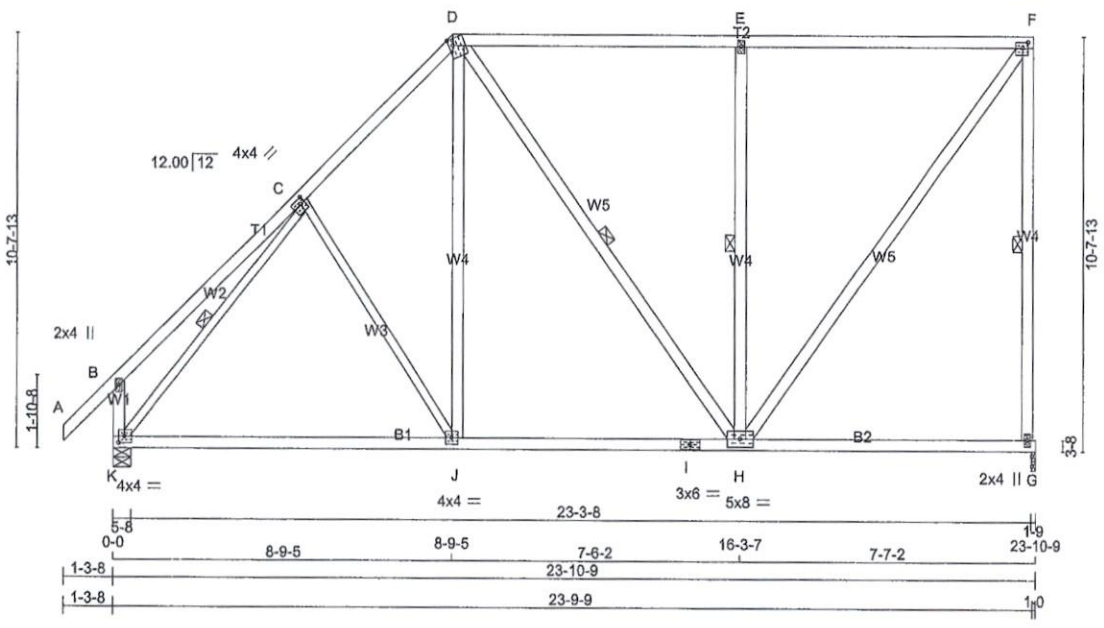

TOTAL WEIGHT = 6 X 137 = 823 lb
[M]

LUMBER
N. L. G. A. RULES

CHORDS	SIZE		LUMBER	DESCR.
A - D	2x4	DRY	No.2	SPF
D - F	2x4	DRY	No.2	SPF
G - F	2x4	DRY	No.2	SPF
K - B	2x4	DRY	No.2	SPF
K - I	2x4	DRY	No.2	SPF
I - G	2x4	DRY	No.2	SPF
ALL WEBS EXCEPT	2x4	DRY	No.2	SPF
C - J	2x3	DRY	No.2	SPF
K - C	2x3	DRY	No.2	SPF

DRY: SEASONED LUMBER.

PLATES (table is in inches)

JT	TYPE	PLATES	W	LEN	Y	X
B	TMV+p	MT20	2.0	4.0		
C	TMWW-t	MT20	4.0	4.0	1.75	1.25
D	TTWW+m	MT20	5.0	6.0	2.00	1.25
E	TMW+w	MT20	2.0	4.0		
F	TMVW-t	MT20	4.0	4.0	1.75	1.75
G	BMV1+p	MT20	2.0	4.0		
H	BMWWW-t	MT20	5.0	8.0		
I	BS-t	MT20	3.0	6.0		
J	BMWW-t	MT20	4.0	4.0		
K	BMVW1-t	MT20	4.0	4.0	2.00	1.75

NOTES- (1)

NOTE: Lateral brace(s) shown shall be 2x4 SPF #2

LICENSED PROFESSIONAL ENGINEER
07/11/2019
R. TURENNE
100157040
PROVINCE OF ONTARIO

DIMENSIONS, SUPPORTS AND LOADINGS SPECIFIED BY FABRICATOR TO BE VERIFIED BY BUILDING DESIGNER

BEARINGS

JT	FACTORED GROSS REACTION VERT	HORZ	MAXIMUM FACTORED GROSS REACTION DOWN	HORZ	UPLIFT	INPUT BRG IN-SX	REQRD BRG IN-SX
G	1230	0	1230	0	0	1-9	1-8
K	1348	0	1348	0	0	5-8	1-8

UNFACTORED REACTIONS

JT	1ST LCASE COMBINED	MAX./MIN. COMPONENT REACTIONS SNOW	LIVE	PERM.LIVE	WIND	DEAD	SOIL
G	873	554 / 0	0 / 0	0 / 0	0 / 0	319 / 0	0 / 0
K	955	619 / 0	0 / 0	0 / 0	0 / 0	336 / 0	0 / 0

BEARING MATERIAL TO BE SPF NO.2 OR BETTER AT JOINT(S) G, K

BRACING
TOP CHORD TO BE SHEATHED OR MAX. PURLIN SPACING = 5.10 FT.
MAX. UNBRACED BOTTOM CHORD LENGTH = 10.00 FT OR RIGID CEILING DIRECTLY APPLIED.

ALL PITCH BREAKS AND PERIMETER CORNER JOINTS MUST BE LATERALLY RESTRAINED.

1 LATERAL BRACE(S) AT 1/ 2 LENGTH OF F-G, D-H, E-H, C-K.

END VERTICAL(S) MUST BE SHEATHED OR HAVE BRACES AS INDICATED IN THE MAX. UNBRACED LENGTH COLUMN OF THE TABLE BELOW

LOADING
TOTAL LOAD CASES: (4)

CHORDS

MEMB. FR-TO	MAX. FACTORED FORCE (LBS)	FACTORED VERT. LOAD (PLF) FROM	TO	LC1 MAX CSI (LC)	MAX. UNBRAC LENGTH
A- B	0 / 42	-84.9	-84.9	0.12 (1)	10.00
B- C	0 / 29	-84.9	-84.9	0.27 (1)	10.00
C- D	-984 / 0	-84.9	-84.9	0.30 (1)	5.90
D- E	-675 / 0	-84.9	-84.9	0.88 (1)	5.10
E- F	-676 / 0	-84.9	-84.9	0.88 (1)	5.10
G- F	-1172 / 0	0.0	0.0	0.67 (1)	5.90
K- B	-279 / 0	0.0	0.0	0.03 (1)	7.81
K- J	0 / 759	-18.5	-18.5	0.38 (4)	10.00
J- I	0 / 673	-18.5	-18.5	0.38 (4)	10.00
I- H	0 / 673	-18.5	-18.5	0.38 (4)	10.00
H- G	0 / 0	-18.5	-18.5	0.22 (4)	10.00

WEBS

MEMB. FR-TO	MAX. FACTORED FORCE (LBS)	MAX CSI (LC)
C- J	-162 / 0	0.18 (1)
J- D	0 / 306	0.05 (1)
D- H	-21 / 4	0.02 (4)
H- E	-792 / 0	0.45 (1)
H- F	0 / 1151	0.19 (1)
K- C	-1257 / 0	0.52 (1)

DESIGN CRITERIA

SPECIFIED LOADS:

TOP	CH.	LL	=	23.3	PSF
		DL	=	6.0	PSF
BOT	CH.	LL	=	0.0	PSF
		DL	=	7.4	PSF
TOTAL	LOAD		=	36.7	PSF

SPACING = 24.0 IN. C/C

LOADING IN FLAT SECTION BASED ON A SLOPE OF 2.00/12 MINIMUM

THIS TRUSS IS DESIGNED FOR RESIDENTIAL OR SMALL BUILDING REQUIREMENTS OF PART 9, NBCC 2010, NBCC 2015

THIS DESIGN COMPLIES WITH:
- PART 9 OF BCBC 2018 , OBC 2012
- CSA 086-09, CSA 086-14
- TPIC 2011, TPIC 2014

(55 % OF 27.2 P.S.F. G.S.L. PLUS 8.4 P.S.F. RAIN LOAD) EQUALS 23.3 P.S.F. SPECIFIED ROOF LIVE LOAD

ALLOWABLE DEFL.(LL)= L/360 (0.79")
CALCULATED VERT. DEFL.(LL) = L/ 999 (0.03")
ALLOWABLE DEFL.(TL)= L/360 (0.79")
CALCULATED VERT. DEFL.(TL) = L/ 999 (0.19")

CSI: TC=0.88/1.00 (E-F:1) , BC=0.38/1.00 (J-K:4) , WB=0.52/1.00 (C-K:1) , SSI=0.31/1.00 (E-F:1)

DOL LUMBER=1.00 NAIL=1.00 LS BEND=1.10 COMP=1.10 SHEAR=1.10 TENS= 1.10

COMPANION LIVE LOAD FACTOR = 1.00

TRUSS PLATE MANUFACTURER IS NOT RESPONSIBLE FOR QUALITY CONTROL IN THE TRUSS MANUFACTURING PLANT .

NAIL VALUES

PLATE	GRIP(DRY) (PSI) MAX	MIN	SHEAR (PLI) MAX	MIN	SECTION (PLI) MAX	MIN
MT20	618	354	1667	788	1987	1656

PLATE PLACEMENT TOL. = 0.250 Inches

PLATE ROTATION TOL. = 5.0 Deg.

JSI GRIP= 0.87 (K) (INPUT = 0.90)
JSI METAL= 0.48 (C) (INPUT = 1.00)

JOB NAME	TRUSS NAME	QUANTITY	PLY	JOB DESC.		DRWG NO.
310385	J1		1	TRUSS DESC.	JT-39002	E-19072240

Alpa Roof Truss, Maple

Version 8.300 S May 10 2019 MiTek Industries, Inc. Wed Jul 10 10:24:38 2019 Page 1
ID:MF8IiriaTok7DlbpT4B71Xys4PG-?PM6jlcxWAL?KwbuelI7hpk67VBo4mqNngkWoHtyzW1N
Scale = 1:31.2

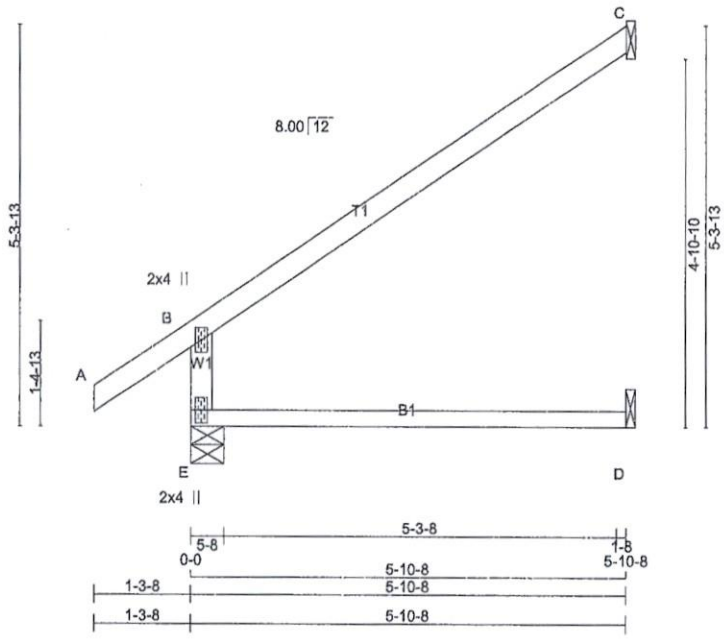

TOTAL WEIGHT = 24 X 16 = 384 lb

LUMBER
N. L. G. A. RULES

CHORDS	SIZE		LUMBER	DESCR.
E - B	2x4	DRY	No.2	SPF
A - C	2x4	DRY	No.2	SPF
E - D	2x3	DRY	No.2	SPF

DRY: SEASONED LUMBER.

PLATES (table is in inches)

JT	TYPE	PLATES	W	LEN	Y	X
B	TMV+p	MT20	2.0	4.0		
E	BMV1+p	MT20	2.0	4.0		

NOTES- (1)

NOTE: Lateral brace(s) shown shall be 2x4 SPF #2

LICENSED PROFESSIONAL ENGINEER
07/10/2019
R. TURENNE
100157040
PROVINCE OF ONTARIO

DIMENSIONS, SUPPORTS AND LOADINGS SPECIFIED BY FABRICATOR TO BE VERIFIED BY BUILDING DESIGNER

BEARINGS

JT	FACTORED GROSS REACTION VERT	HORZ	MAXIMUM FACTORED GROSS REACTION DOWN	HORZ	UPLIFT	INPUT BRG IN-SX	REQRD BRG IN-SX
E	494	0	494	0	0	5-8	1-8
C	187	0	187	0	0	1-8	1-8
D	43	0	48	0	0	1-8	1-8

SEE MITEK STANDARD DETAIL B97791H FOR CONNECTION TO JOINT(S) C , D

UNFACTORED REACTIONS

JT	1ST LCASE COMBINED	MAX./MIN. COMPONENT REACTIONS SNOW	LIVE	PERM.LIVE	WIND	DEAD	SOIL
E	348	235 / 0	0 / 0	0 / 0	0 / 0	113 / 0	0 / 0
C	129	103 / 0	0 / 0	0 / 0	0 / 0	26 / 0	0 / 0
D	34	0 / 0	0 / 0	0 / 0	0 / 0	34 / 0	0 / 0

BEARING MATERIAL TO BE SPF NO.2 OR BETTER AT JOINT(S) E

BRACING
TOP CHORD TO BE SHEATHED OR MAX. PURLIN SPACING = 6.25 FT.
MAX. UNBRACED BOTTOM CHORD LENGTH = 10.00 FT OR RIGID CEILING DIRECTLY APPLIED.

ALL PITCH BREAKS AND PERIMETER CORNER JOINTS MUST BE LATERALLY RESTRAINED.

LOADING
TOTAL LOAD CASES: (4)

CHORDS

MEMB. FR-TO	MAX. FACTORED FORCE (LBS)	FACTORED VERT. LOAD (PLF) FROM	TO	LC1 MAX CSI (LC)	MAX. UNBRAC LENGTH
E- B	-428 / 0	0.0	0.0	0.16 (4)	7.81
A- B	0 / 32	-84.9	-84.9	0.11 (1)	10.00
B- C	-35 / 0	-84.9	-84.9	0.50 (1)	6.25
E- D	0 / 0	-18.5	-18.5	0.30 (4)	10.00

WEBS

MEMB. FR-TO	MAX. FACTORED FORCE (LBS)	MAX CSI (LC)

DESIGN CRITERIA

SPECIFIED LOADS:

TOP CH.	LL	=	23.3	PSF
	DL	=	6.0	PSF
BOT CH.	LL	=	0.0	PSF
	DL	=	7.4	PSF
TOTAL LOAD		=	36.7	PSF

SPACING = 24.0 IN. C/C

THIS TRUSS IS DESIGNED FOR RESIDENTIAL OR SMALL BUILDING REQUIREMENTS OF PART 9, NBCC 2010, NBCC 2015

THIS DESIGN COMPLIES WITH:
- PART 9 OF BCBC 2018 , OBC 2012
- CSA 086-09, CSA 086-14
- TPIC 2011, TPIC 2014

DESIGN ASSUMPTIONS
-OVERHANG NOT TO BE ALTERED OR CUT OFF.

(55 % OF 27.2 P.S.F. G.S.L. PLUS 8.4 P.S.F. RAIN LOAD) EQUALS 23.3 P.S.F. SPECIFIED ROOF LIVE LOAD

ALLOWABLE DEFL.(LL)= L/360 (0.20")
CALCULATED VERT. DEFL.(LL) = L/ 999 (0.00")
ALLOWABLE DEFL.(TL)= L/360 (0.20")
CALCULATED VERT. DEFL.(TL) = L/ 932 (0.08")

CSI: TC=0.50/1.00 (B-C:1) , BC=0.30/1.00 (D-E:4) , WB=0.00/1.00 (n/a:0) , SSI=0.20/1.00 (B-C:1)

DOL LUMBER=1.00 NAIL=1.00 LS BEND=1.10 COMP=1.10 SHEAR=1.10 TENS= 1.10

COMPANION LIVE LOAD FACTOR = 1.00

TRUSS PLATE MANUFACTURER IS NOT RESPONSIBLE FOR QUALITY CONTROL IN THE TRUSS MANUFACTURING PLANT .

NAIL VALUES

PLATE	GRIP(DRY) (PSI) MAX	MIN	SHEAR (PLI) MAX	MIN	SECTION (PLI) MAX	MIN
MT20	618	354	1667	788	1987	1656

PLATE PLACEMENT TOL. = 0.250 Inches

PLATE ROTATION TOL. = 5.0 Deg.

JSI GRIP= 0.28 (B) (INPUT = 0.90)
JSI METAL= 0.22 (B) (INPUT = 1.00)

JOB NAME	TRUSS NAME	QUANTITY	PLY	JOB DESC.	DRWG NO.
310395	H6		1	TRUSS DESC. JT-39002	E-19072367

Alpa Roof Truss, Maple

Version 8.300 S May 10 2019 MiTek Industries, Inc. Thu Jul 11 11:22:22 2019 Page 1
ID:kx9I86OLlWqKxBYZIGBjHpysKNA-pmIPCN9UQuGLO5V1_oL7xE?7bwCQ3NXzto??MDyzA5F

Scale = 1:67.2

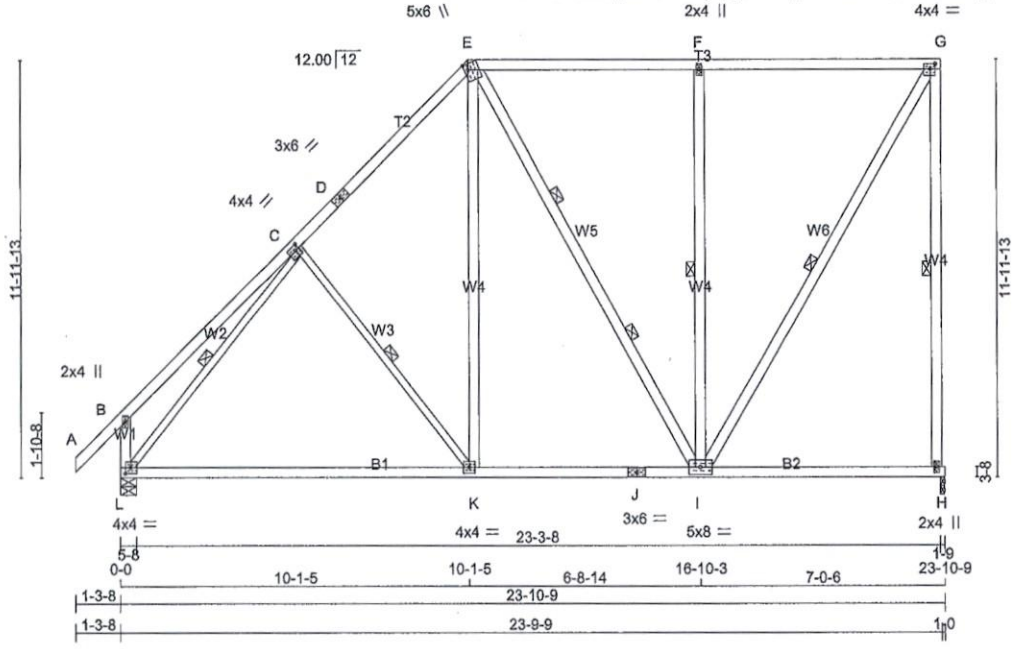

TOTAL WEIGHT = 14 X 145 = 2031 lb

[M][F]

LUMBER

N. L. G. A. RULES

CHORDS	SIZE		LUMBER	DESCR.
A - D	2x4	DRY	No.2	SPF
D - E	2x4	DRY	No.2	SPF
E - G	2x4	DRY	No.2	SPF
H - G	2x4	DRY	No.2	SPF
L - B	2x4	DRY	No.2	SPF
L - J	2x4	DRY	No.2	SPF
J - H	2x4	DRY	No.2	SPF
ALL WEBS EXCEPT	2x4	DRY	No.2	SPF
C - K	2x3	DRY	No.2	SPF
L - C	2x3	DRY	No.2	SPF

DRY: SEASONED LUMBER.

PLATES (table is in inches)

JT	TYPE	PLATES	W	LEN	Y	X
B	TMV+p	MT20	2.0	4.0		
C	TMWW-t	MT20	4.0	4.0	1.75	1.25
D	TS-t	MT20	3.0	6.0		
E	TTWW+m	MT20	5.0	6.0	2.00	1.25
F	TMW+w	MT20	2.0	4.0		
G	TMVW-t	MT20	4.0	4.0	1.75	1.75
H	BMV1+p	MT20	2.0	4.0		
I	BMWWW-t	MT20	5.0	8.0		
J	BS-t	MT20	3.0	6.0		
K	BMWW-t	MT20	4.0	4.0		
L	BMVW1-t	MT20	4.0	4.0	2.00	1.75

NOTES- (1)

NOTE: Lateral brace(s) shown shall be 2x4 SPF #2

LICENSED PROFESSIONAL ENGINEER
07/11/2019
R. TURENNE
100157040
PROVINCE OF ONTARIO

DIMENSIONS, SUPPORTS AND LOADINGS SPECIFIED BY FABRICATOR TO BE VERIFIED BY BUILDING DESIGNER

BEARINGS

JT	FACTORED GROSS REACTION VERT	HORZ	MAXIMUM FACTORED GROSS REACTION DOWN	HORZ	UPLIFT	INPUT BRG IN-SX	REQRD BRG IN-SX
H	1303	0	1303	0	0	1-9	1-8
L	1378	0	1378	0	0	5-8	1-8

UNFACTORED REACTIONS

JT	1ST LCASE COMBINED	MAX./MIN. COMPONENT REACTIONS SNOW	LIVE	PERM.LIVE	WIND	DEAD	SOIL
H	932	554 / 0	0 / 0	0 / 0	0 / 0	377 / 0	0 / 0
L	978	619 / 0	0 / 0	0 / 0	0 / 0	359 / 0	0 / 0

BEARING MATERIAL TO BE SPF NO.2 OR BETTER AT JOINT(S) H, L

BRACING

FOR SECTION E-G, MAX. PURLIN SPACING = 2.00 FT.
FOR OTHER SECTIONS, TOP CHORD TO BE SHEATHED OR MAX. PURLIN SPACING = 5.98 FT.
MAX. UNBRACED BOTTOM CHORD LENGTH = 10.00 FT OR RIGID CEILING DIRECTLY APPLIED.

ALL PITCH BREAKS AND PERIMETER CORNER JOINTS MUST BE LATERALLY RESTRAINED.

1 LATERAL BRACE(S) AT 1/ 2 LENGTH OF G-H, C-K, F-I, G-I, C-L.
2 LATERAL BRACE(S) AT 1/ 3 LENGTH OF E-I.

END VERTICAL(S) MUST BE SHEATHED OR HAVE BRACES AS INDICATED IN THE MAX. UNBRACED LENGTH COLUMN OF THE TABLE BELOW

LOADING

TOTAL LOAD CASES: (4)

CHORDS

MEMB. FR-TO	MAX. FACTORED FORCE (LBS)	FACTORED VERT. LOAD LC1 (PLF) FROM	TO	MAX CSI (LC)	MAX. UNBRAC LENGTH
A- B	0 / 42	-84.9	-84.9	0.12 (1)	10.00
B- C	0 / 37	-84.9	-84.9	0.36 (1)	10.00
C- D	-958 / 0	-84.9	-84.9	0.30 (1)	5.98
D- E	-958 / 0	-84.9	-84.9	0.30 (1)	5.98
E- F	-595 / 0	-92.4	-92.4	0.56 (1)	2.00
F- G	-596 / 0	-92.4	-92.4	0.57 (1)	2.00
H- G	-1247 / 0	0.0	0.0	0.98 (1)	5.76
L- B	-279 / 0	0.0	0.0	0.03 (1)	7.81
L- K	0 / 783	-18.5	-18.5	0.47 (4)	10.00
K- J	0 / 654	-18.5	-18.5	0.47 (4)	10.00
J- I	0 / 654	-18.5	-18.5	0.47 (4)	10.00
I- H	0 / 0	-18.5	-18.5	0.19 (4)	10.00

WEBS

MEMB. FR-TO	MAX. FACTORED FORCE (LBS)	MAX CSI (LC)
C- K	-213 / 0	0.10 (1)
K- E	0 / 355	0.06 (1)
E- I	-117 / 0	0.05 (1)
I- F	-785 / 0	0.62 (1)
I- G	0 / 1166	0.19 (1)
L- C	-1286 / 0	0.59 (1)

DESIGN CRITERIA

SPECIFIED LOADS:

TOP CH.	LL	=	23.3	PSF
	DL	=	6.0	PSF
BOT CH.	LL	=	0.0	PSF
	DL	=	7.4	PSF
TOTAL LOAD		=	36.7	PSF

SPACING = 24.0 IN. C/C

LOADING IN FLAT SECTION BASED ON PIGGYBACK TRUSS WITH SLOPES OF 6.00/12 AND -6.00/12 AND RESPECTIVE WALL HEIGHTS OF 0-0 AND 0-0 AND AN ADDITIONAL DEAD LOAD OF 3.0 P.S.F.

THIS TRUSS IS DESIGNED FOR RESIDENTIAL OR SMALL BUILDING REQUIREMENTS OF PART 9, NBCC 2010, NBCC 2015

THIS DESIGN COMPLIES WITH:
- PART 9 OF BCBC 2018 , OBC 2012
- CSA 086-09, CSA 086-14
- TPIC 2011, TPIC 2014

(55 % OF 27.2 P.S.F. G.S.L. PLUS 8.4 P.S.F. RAIN LOAD) EQUALS 23.3 P.S.F. SPECIFIED ROOF LIVE LOAD

ALLOWABLE DEFL.(LL)= L/360 (0.79")
CALCULATED VERT. DEFL.(LL) = L/ 999 (0.03")
ALLOWABLE DEFL.(TL)= L/360 (0.79")
CALCULATED VERT. DEFL.(TL) = L/ 889 (0.32")

CSI: TC=0.98/1.00 (G-H:1) , BC=0.47/1.00 (K-L:4) , WB=0.62/1.00 (F-I:1) , SSI=0.31/1.00 (F-G:1)

DOL LUMBER=1.00 NAIL=1.00 LS BEND=1.10 COMP=1.10 SHEAR=1.10 TENS= 1.10

COMPANION LIVE LOAD FACTOR = 1.00

TRUSS PLATE MANUFACTURER IS NOT RESPONSIBLE FOR QUALITY CONTROL IN THE TRUSS MANUFACTURING PLANT .

NAIL VALUES

PLATE	GRIP(DRY) (PSI) MAX	MIN	SHEAR (PLI) MAX	MIN	SECTION (PLI) MAX	MIN
MT20	618	354	1667	788	1987	1656

PLATE PLACEMENT TOL. = 0.250 Inches

PLATE ROTATION TOL. = 5.0 Deg.

JSI GRIP= 0.89 (L) (INPUT = 0.90)
JSI METAL= 0.49 (C) (INPUT = 1.00)

JOB NAME	TRUSS NAME	QUANTITY	PLY	JOB DESC.	DRWG NO.
310395	H7		1	TRUSS DESC. JT-39002	E-19072368

Alpa Roof Truss, Maple

Version 8.300 S May 10 2019 MiTek Industries, Inc. Thu Jul 11 11:22:23 2019 Page 1

ID:kx9I86OLIWqKxBYZIGBjHpysKNA-HyrnPj96BBOC0E4DYWsMUSYO1JdFoxz76SkYufyzA5E

Scale: 1/2"=1'

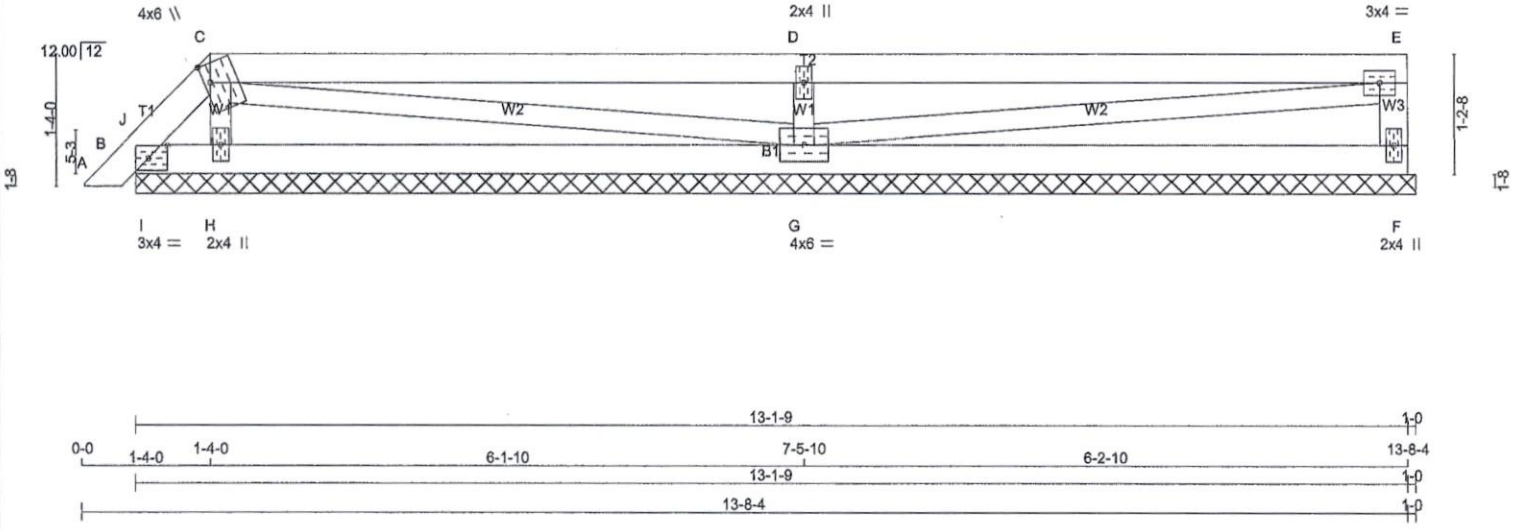

TOTAL WEIGHT = 4 X 42 = 170 lb

[M]

LUMBER

N. L. G. A. RULES

CHORDS	SIZE		LUMBER	DESCR.
A - C	2x4	DRY	No.2	SPF
C - E	2x4	DRY	No.2	SPF
F - E	2x4	DRY	No.2	SPF
B - F	2x4	DRY	No.2	SPF
ALL WEBS	2x3	DRY	No.2	SPF

DRY: SEASONED LUMBER.

PLATES (table is in inches)

JT	TYPE	PLATES	W	LEN	Y	X
B	TMB1-I	MT20	3.0	4.0	1.50	2.50
C	TTWW+m	MT20	4.0	6.0	2.25	0.75
D	TMW+w	MT20	2.0	4.0		
E	TMVW-t	MT20	3.0	4.0		
F	BMV1+p	MT20	2.0	4.0		
G	BMWWW1-t	MT20	4.0	6.0		
H	BMW1+w	MT20	2.0	4.0		

NOTES- (1)

NOTE: Lateral brace(s) shown shall be 2x4 SPF #2

LICENSED PROFESSIONAL ENGINEER
07/11/2019
R. TURENNE
100157040
PROVINCE OF ONTARIO

DIMENSIONS, SUPPORTS AND LOADINGS SPECIFIED BY FABRICATOR TO BE VERIFIED BY BUILDING DESIGNER

BEARINGS

JT	FACTORED GROSS REACTION VERT	HORZ	MAXIMUM FACTORED GROSS REACTION DOWN	HORZ	UPLIFT	INPUT BRG IN-SX	REQRD BRG IN-SX
F	244	0	244	0	0	13-2-9 (13-1-9 }	10-12
B	68	0	68	0	-23	13-2-9 (13-1-9 }	10-12
H	295	0	295	0	0	13-2-9 (13-1-9 }	10-12
G	788	0	788	0	0	13-2-9 (13-1-9 }	10-12

VALUE IN PARENTHESIS INDICATES EFFECTIVE BEARING LENGTH

PROVIDE ANCHORAGE AT BEARING JOINT B FOR 150 LBS FACTORED UPLIFT

UNFACTORED REACTIONS

JT	1ST LCASE COMBINED	MAX./MIN. COMPONENT REACTIONS SNOW	LIVE	PERM.LIVE	WIND	DEAD	SOIL
F	173	109 / 0	0 / 0	0 / 0	0 / 0	64 / 0	0 / 0
B	43	59 / 0	0 / 0	0 / 0	0 / 0	0 / -17	0 / 0
H	215	103 / 0	0 / 0	0 / 0	0 / 0	112 / 0	0 / 0
G	558	360 / 0	0 / 0	0 / 0	0 / 0	198 / 0	0 / 0

BEARING MATERIAL TO BE SPF NO.2 OR BETTER AT JOINT(S) F, B, H, G

BRACING

TOP CHORD TO BE SHEATHED OR MAX. PURLIN SPACING = 6.25 FT.
MAX. UNBRACED BOTTOM CHORD LENGTH = 10.00 FT OR RIGID CEILING DIRECTLY APPLIED.

ALL PITCH BREAKS AND PERIMETER CORNER JOINTS MUST BE LATERALLY RESTRAINED.

LOADING

TOTAL LOAD CASES: (4)

CHORDS

MEMB. FR-TO	MAX. FACTORED FORCE (LBS)	FACTORED VERT. LOAD LC1 (PLF) FROM	TO	MAX CSI (LC)	MAX. UNBRAC LENGTH
A- B	0 / 12	-84.9	-84.9	0.01 (1)	10.00
B- J	-6 / 33	-84.9	-84.9	0.03 (4)	10.00
J- C	-56 / 0	-84.9	-84.9	0.02 (4)	6.25
C- D	0 / 0	-84.9	-84.9	0.55 (1)	10.00
D- E	-1 / 0	-84.9	-84.9	0.55 (1)	10.00
F- E	-199 / 0	0.0	0.0	0.02 (1)	7.81
B- I	0 / 29	-18.5	-18.5	0.01 (1)	10.00
I- H	0 / 29	-18.5	-18.5	0.10 (4)	10.00
H- G	0 / 10	-18.5	-18.5	0.18 (4)	10.00
G- F	0 / 0	-18.5	-18.5	0.18 (4)	10.00

WEBS

MEMB. FR-TO	MAX. FACTORED FORCE (LBS)	MAX CSI (LC)
H- C	-169 / 0	0.02 (1)
C- G	-9 / 0	0.01 (1)
G- D	-655 / 0	0.09 (1)
G- E	0 / 1	0.00 (1)
I- J	-97 / 0	0.00 (1)

DESIGN CRITERIA

SPECIFIED LOADS:

TOP CH.	LL	=	23.3	PSF
	DL	=	6.0	PSF
BOT CH.	LL	=	0.0	PSF
	DL	=	7.4	PSF
TOTAL LOAD		=	36.7	PSF

SPACING = 24.0 IN. C/C

LOADING IN FLAT SECTION BASED ON A SLOPE OF 2.00/12 MINIMUM

THIS TRUSS IS DESIGNED FOR RESIDENTIAL OR SMALL BUILDING REQUIREMENTS OF PART 9, NBCC 2010, NBCC 2015

THIS DESIGN COMPLIES WITH:
- PART 9 OF BCBC 2018 , OBC 2012
- CSA 086-09, CSA 086-14
- TPIC 2011, TPIC 2014

(55 % OF 27.2 P.S.F. G.S.L. PLUS 8.4 P.S.F. RAIN LOAD) EQUALS 23.3 P.S.F. SPECIFIED ROOF LIVE LOAD

CSI: TC=0.55/1.00 (D-E:1) , BC=0.18/1.00 (G-H:4) , WB=0.09/1.00 (D-G:1) , SSI=0.26/1.00 (D-E:1)

DOL LUMBER=1.00 NAIL=1.00 LS BEND=1.10 COMP=1.10 SHEAR=1.10 TENS= 1.10

COMPANION LIVE LOAD FACTOR = 1.00

TRUSS PLATE MANUFACTURER IS NOT RESPONSIBLE FOR QUALITY CONTROL IN THE TRUSS MANUFACTURING PLANT .

NAIL VALUES

PLATE	GRIP(DRY) (PSI) MAX	MIN	SHEAR (PLI) MAX	MIN	SECTION (PLI) MAX	MIN
MT20	618	354	1667	788	1987	1656

PLATE PLACEMENT TOL. = 0.250 Inches

PLATE ROTATION TOL. = 5.0 Deg.

JSI GRIP= 0.34 (D) (INPUT = 0.90)
JSI METAL= 0.14 (D) (INPUT = 1.00)

May 27, 2019

Re: Expiration Date for Technical Bulletins Extended to 12/31/2019

Please be advised that the expiration date of the Technical Bulletins listed below has been extended until December 31, 2019.

T-SPECCP17	T-SPECH17	T-SPECDSHGUS17R
T-SPECHGUS17-R	T-SPECHHUS17-R	T-SPECHUS17
T-SPECLF17	T-SPECLT17	T-SPECLU17
T-SPECCLUL17	T-SPECLUS17	T-SPECSUR17
T-SPECTBE17	T-SPECTC17	T-SPECTHGB17
T-SPECTHGBHV17	T-SPECTHGQ17	T-SPECTHGW17
T-SPECLSULSSU17	T-SPECHTHGQ17	T-SPECSTHGQ17

Should you have any questions or concerns regarding the above, please contact me at your convenience.

Sincerely,

Brent Bunting, P.Eng.
Simpson Strong-Tie Canada, Ltd.

LICENSED PROFESSIONAL ENGINEER
5/28/2019
B. D. BUNTING
PROVINCE OF ONTARIO

LUS – Double Shear Joist Hangers

SIMPSON Strong-Tie®

All LUS hangers have double shear nailing. This patented innovation distributes the load through two points on each joist nail for greater strength. It also allows the use of fewer nails, faster installation and the use of common nails for all connections.

Material: 18 gauge

Finish: G90 galvanized

Design:

- Factored resistances are in accordance with CSA O86-14.
- Uplift resistances have been increased 15%. No further increase is permitted.
- Wood shear is not considered in the factored resistances given. The specifier must ensure that the joist and header capacities are capable of withstanding these loads.

Installation:

- Use all specified fasteners.
- Nails: 16d = 0.162" dia. x 3½" long common wire, 10d = 0.148" x 3" long common wire.
- Double shear nails must be driven at an angle through the joist or truss into the header to achieve the table loads.
- Not designed for welded or nailer applications.

Options:

- These hangers cannot be modified

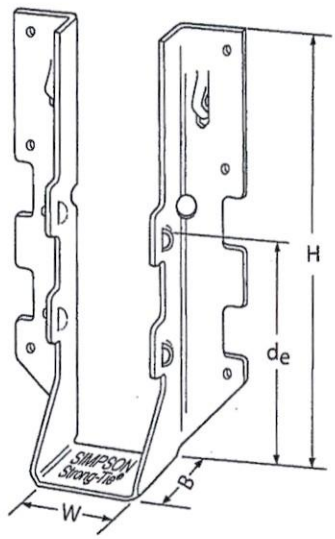

LUS28

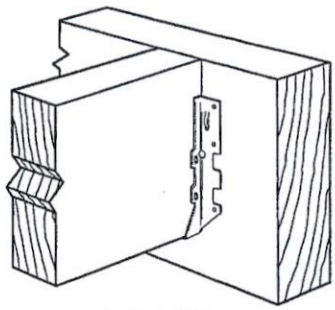

Typical LUS Installation

Model No.	Ga.	Dimensions (in.)				Fasteners		Factored Resistance (lb.)			
								D.Fir-L		S-P-F	
		W	H	B	d_e[1]	Face	Joist	Uplift (K_D=1.15)	Normal (K_D=1.00)	Uplift (K_D=1.15)	Normal (K_D=1.00)
LUS24	18	1 9/16	3 1/8	1 3/4	1 15/16	(4) 10d	(2) 10d	710	1630	645	1155
LUS24-2	18	3 1/8	3 1/8	2	1 13/16	(4) 16d	(2) 16d	835	2020	590	1435
LUS26	18	1 9/16	4 3/4	1 3/4	3 5/8	(4) 10d	(4) 10d	1420	2170	1290	1630
LUS26-2	18	3 1/8	4 7/8	2	4	(4) 16d	(4) 16d	1720	2595	1545	1920
LUS26-3	18	4 5/8	4 3/16	2	3 1/4	(4) 16d	(4) 16d	1720	2595	1545	2340
LUS28	18	1 9/16	6 5/8	1 3/4	3 3/4	(6) 10d	(6) 10d	1420	2520	1290	1790
LUS28-2	18	3 1/8	7	2	4	(6) 16d	(4) 16d	1720	3325	1545	2575
LUS28-3	18	4 5/8	6 1/4	2	3 1/4	(6) 16d	(4) 16d	1720	3325	1545	2375
LUS210	18	1 9/16	7 13/16	1 3/4	3 7/8	(8) 10d	(4) 10d	1420	2785	1290	2210
LUS210-2	18	3 1/8	9	2	6	(8) 16d	(6) 16d	2580	4500	2320	3195
LUS210-3	18	4 5/8	8 3/16	2	5 1/4	(8) 16d	(6) 16d	2580	3345	2320	2375

1. d_e is the distance from the seat of the hanger to the highest joist nail.

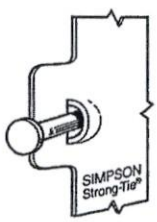

Dome Double Shear Nailing prevents tabs breaking off (available on some models).

U.S. Patent 5,603,580

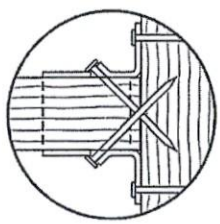

Double Shear Nailing Top View.

LICENSED PROFESSIONAL ENGINEER
4/5/2017
B. D. BUNTING
PROVINCE OF ONTARIO

LIMIT STATES DESIGN

This technical bulletin is effective until June 30, 2019, and reflects information available as of March 1, 2017. This information is updated periodically and should not be relied upon after June 30, 2019. Contact Simpson Strong-Tie for current information and limited warranty or see strongtie.com.

© 2017 Simpson Strong-Tie Company Inc.

(800) 999-5099
strongtie.com

HHUS – Double Shear Joist Hangers

SIMPSON Strong-Tie®

All HHUS hangers have double shear nailing. This patented innovation distributes the load through two points on each joist nail for greater strength. It also allows the use of fewer nails, faster installation and the use of common nails for all connections. Do not bend or remove tabs.

Material: 14 gauge

Finish: G90 galvanized

Design:

- Factored resistances are in accordance with CSA O86-14.
- Uplift resistances have been increased 15%. No further increase is permitted.
- Wood shear is not considered in the factored resistances given. The specifier must ensure that the joist and header capacities are capable of withstanding these loads.

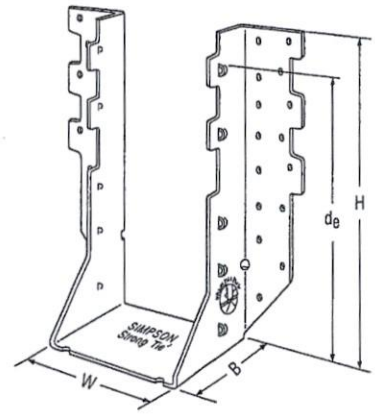

HHUS410

Installation:

- Use all specified fasteners
- Nails: 16d = 0.162" dia. x 3½" long common wire
- Double shear nails must be driven at an angle through the joist or truss into the header to achieve the table loads
- Not designed for welded or nailer applications

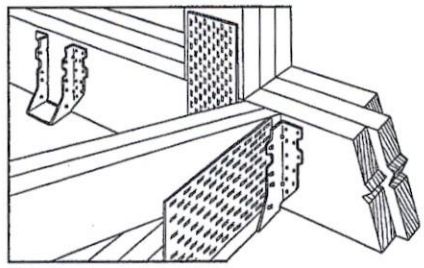

Typical HHUS Installation (Truss Designer to provide fastener quantity for connecting multiple members together)

Options:

- See current catalogue for options

Model No.	Ga.	Dimensions (in.)				Fasteners		Factored Resistance (lb.)			
								D.Fir-L		S-P-F	
		W	H	B	d_e[1]	Face	Joist	Uplift (K_D=1.15)	Normal (K_D=1.00)	Uplift (K_D=1.15)	Normal (K_D=1.00)
HHUS26-2	14	3 5/16	5 13/16	3	3 15/16	(14) 16d	(6) 16d	2850	7335	2065	5205
HHUS28-2	14	3 5/16	7 7/32	3	6 5/32	(22) 16d	(8) 16d	3765	8940	2675	6345
HHUS210-2	14	3 5/16	9 3/32	3	8	(30) 16d	(10) 16d	4745	9660	4310	7000
HHUS210-3	14	4 11/16	9	3	7 15/16	(30) 16d	(10) 16d	4745	10545	4310	7485
HHUS210-4	14	6 1/8	8 29/32	3	7 27/32	(30) 16d	(10) 16d	4745	10545	4310	7485
HHUS46	14	3 5/8	5 13/32	3	3 15/16	(14) 16d	(6) 16d	2540	7335	2065	5205
HHUS48	14	3 5/8	7 1/8	3	6 1/8	(22) 16d	(8) 16d	3765	8945	2267	6345
HHUS410	14	3 5/8	9	3	8	(30) 16d	(10) 16d	4745	9855	4310	7000
HHUS5.50/10	14	5 1/2	9	3	8	(30) 16d	(10) 16d	4745	10545	4310	7485
HHUS7.25/10	14	7 1/4	9	3 5/16	7 29/32	(30) 16d	(10) 16d	4745	10770	4310	7650

1. d_e is the distance from the seat of the hanger to the highest joist nail.

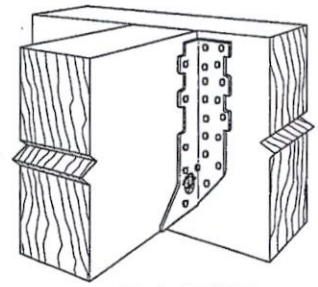

Typical HHUS Installation

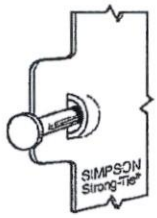

Dome Double Shear Nailing prevents tabs breaking off (available on some models).

U.S. Patent 5,603,580

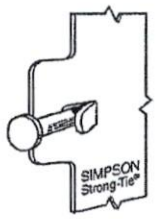

Double Shear Nailing Side View. Do not bend tab back.

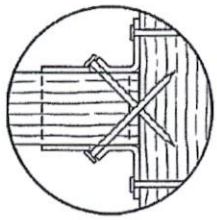

Double Shear Nailing Top View.

LIMIT STATES DESIGN

This technical bulletin is effective until June 30, 2019, and reflects information available as of March 1, 2017. This information is updated periodically and should not be relied upon after June 30, 2019. Contact Simpson Strong-Tie for current information and limited warranty or see strongtie.com.

© 2017 Simpson Strong-Tie Company Inc.

(800) 999-5099
strongtie.com

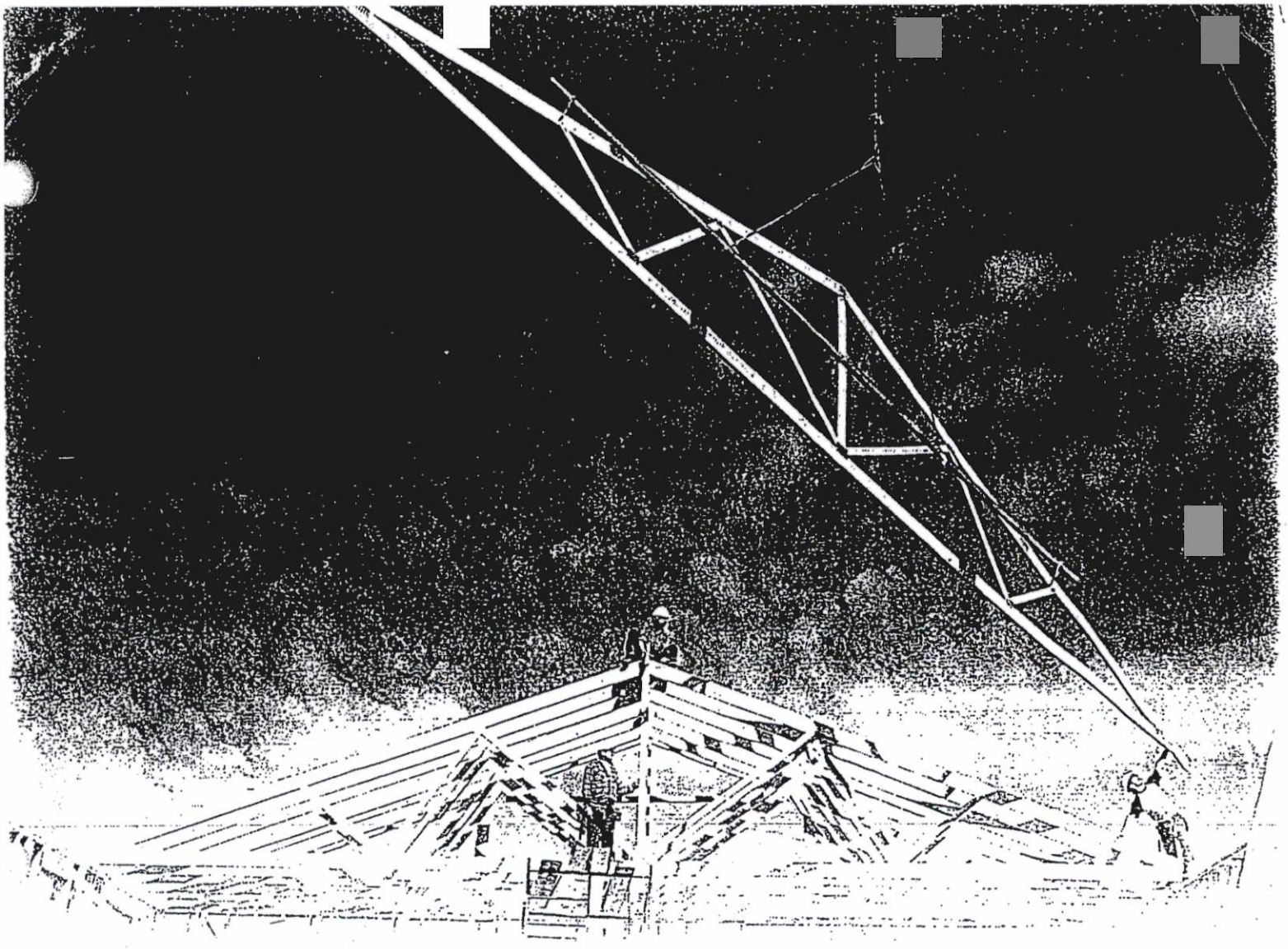

Wood Truss Installation

A Guide to proper handling, erecting and bracing metal plate connected wood trusses

Table of Content

Warning.....4

1 Unloading & Lifting.....5

2 Job Site Handling.....5

3 Hoisting.....6

4 Beginning the Erection Process.....7

5 Erection Tolerance.....8

6 Bracing.....8

7 Bracing Requirements for 3 Planes of Roof.....9

8 Stacking Materials.....10

Caution Notes.....11

Warning

General

Familiarity with the **Construction Design Documents**, the **Truss Design Drawings**, and **Truss Placement Plans** (if required by the **Construction Design Documents**) is required to properly erect, brace, and connect the trusses to the building system.

All of the care and quality involved in the design and manufacture of wood trusses can be jeopardized if the trusses are not properly handled, erected, and braced.

The consequences of improper handling, erecting, and bracing may be a collapse of the structure, which at best is a substantial loss of time and materials, and at worst is a loss of life. The majority of truss accidents occur during truss installation and not as a result of improper design or manufacture.

Prior to truss erection, the builder/erector shall meet with the erection crew for a safety and planning meeting, making sure each crew member understands his or her roles and responsibilities during the erection process.

Temporary Erection Bracing

Trusses are not marked in any way to identify the frequency, or location of temporary erection bracing.

All temporary bracing shall comply with the latest edition of *Commentary and Recommendations for Handling, Installing & Bracing Metal Plate Connected Wood Trusses* (HIB), published by the Truss Plate Institute, and/or as specified in the **Construction Design Documents** prepared by the building designer.

Permanent Truss Bracing

Permanent bracing for the roof or floor trusses is the responsibility of the building designer and should be shown on the **Construction Design Documents**. Permanent bracing locations for individual compression members of a wood truss are shown on the **Truss Design Drawings**, and shall be installed by the building or erection contractor. This bracing is needed for the proper performance of individual trusses within the roof or floor system. The design and connection of the bracing to the truss and then to the overall building system is the responsibility of the building designer, and is in addition to the permanent bracing plan, which is also specified by the building designer.

Special Design Requirements

Special design requirements, such as wind bracing, portal bracing, seismic bracing, diaphragms, shear walls, or other load transfer elements and their connections to wood trusses must be considered separately by the building designer, who shall determine size, location, and method of connections for all bracing as needed to resist these forces.

1 Unloading & Lifting

Never handle trusses flat

Beginning with the unloading process, and throughout all phases of construction, care must be taken to avoid **lateral bending** of trusses, which can cause damage to the lumber and metal connector plates at the joints.

Avoid lateral bending

- **Use special care in windy weather.**
- **If using a crane within 10 feet of an electric line, contact the local power company.**
- **If using a crane within 5 miles of an airport, contact the airport 30 days prior to erection to learn about any safety regulations that must be followed.**

2 Job Site Handling

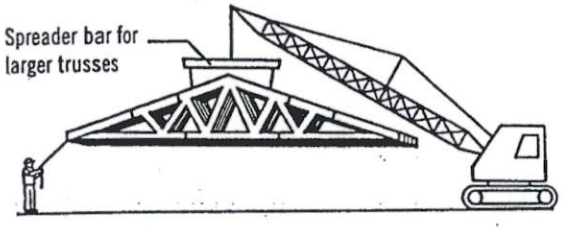

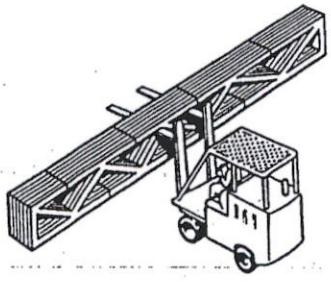

All trusses should be picked up at the top chords in a vertical position only

Proper banding and smooth ground allow for unloading of trusses without damage. This should be done as close to the building site as possible to minimize handling. **Do not** break banding until installation begins. Hand erection of trusses is allowed, provided excessive lateral bending is prevented.

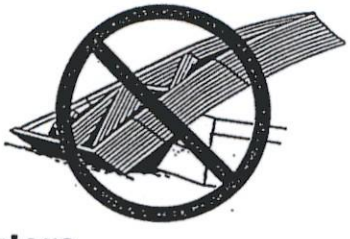

Do not store unbraced bundles upright

If trusses are stored vertically they shall be braced in a manner that will prevent tipping or topping. Generally cuting of the banding is done just prior to installation.

Do not store on uneven ground

If trusses are stored horizontally, blocking should be used on eight to ten foot centers, or as required, to minimize lateral bending and moisture gain.

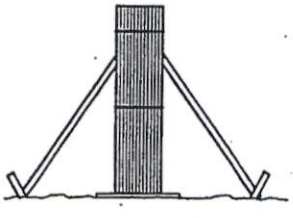

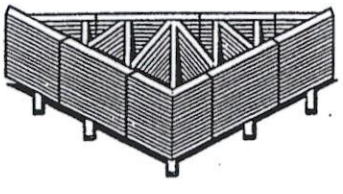

Care should be exercised when removing banding to avoid damaging trusses.

During long term storage, trusses shall be protected from the environment in a manner that provides for adequate ventilation of the trusses. If tarpaulins or other material is used, the ends shall be left open for ventilation. Plastic is not recommended, since it can trap moisture.

3 Hoisting

All trusses that are erected one at a time shall be held safely in position by the erection equipment until such time as all necessary bracing has been installed and the ends of the trusses are securely fastened to the building.

Avoid lateral bending

L ≤ 30'

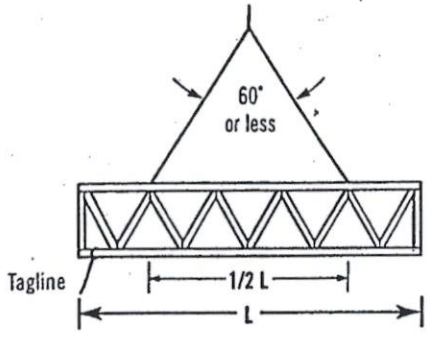

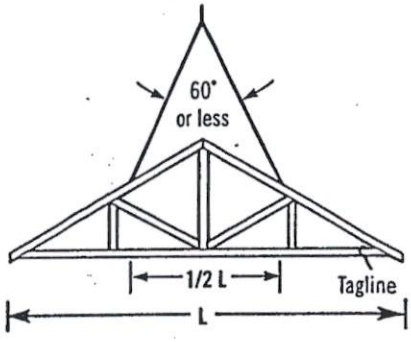

Truss sling is acceptable where these criteria are met.

30' < L ≤ 60'

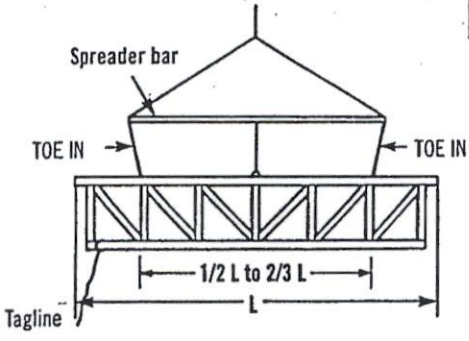

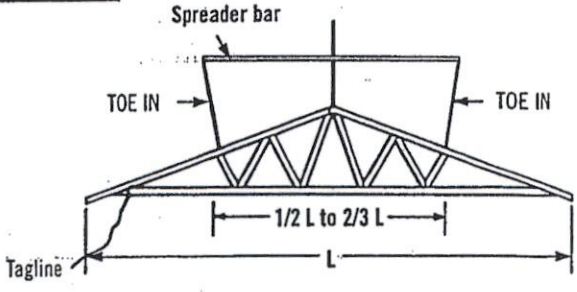

Use spreader bar in all other cases. It should be noted that the lines from the ends of the spreader bar **"TOE IN"**; if these lines should **"TOE OUT"** the truss may fold in half.

L > 60'

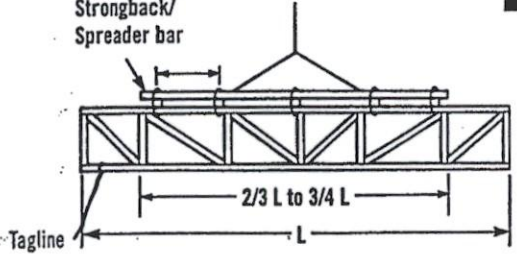

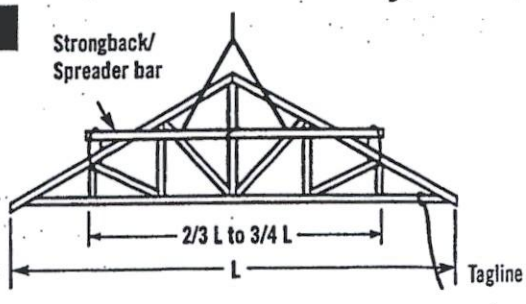

For lifting trusses with spans in excess of 60 feet, it is recommended that a strongback/spreader bar be used as illustrated. The strongback/spreader bar should be attached to the top chord and web members at intervals of approximately 10 feet. Further, the strongback/spreader bar should be at or above the mid-height of the truss to prevent overturning. The strongback/spreader bar can be of any material with sufficient strength to safely carry the weight of the truss and sufficient rigidity to adequately resist bending of the truss.

4 Beginning the Erection Process

It is important for the builder or erection contractor to provide substantial bracing for the first truss erected. The two or more trusses making up the rest of the first set are tied to and rely upon the first truss for stability. Likewise, after this first set of trusses is adequately cross-braced, the remaining trusses installed rely upon this first set for stability. Thus, the performance of the truss bracing system depends to a great extent on how well the first group of trusses is braced.

Ground Brace – Exterior

One satisfactory method ties the first unit of trusses off to a series of braces that are attached to a stake driven into the ground and securely anchored. The ground brace itself should be supported as shown below or it is apt to buckle. Additional ground braces in the opposite direction, inside the building, are also recommended.

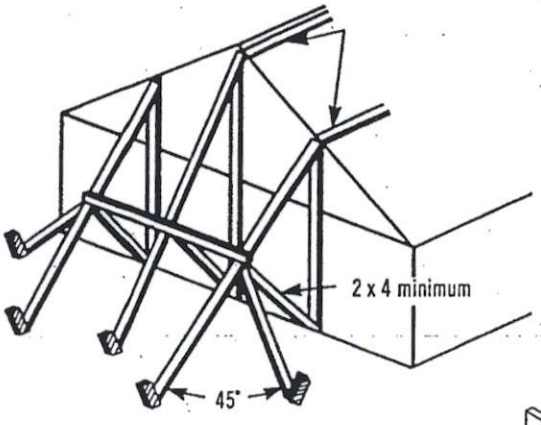

Note: Locate ground braces for first truss directly in line with all rows of top chord continuous lateral bracing (either temporary or permanent).

Ground Brace – Interior

Another satisfactory method where height of building or ground conditions prohibit bracing from the exterior is to tie the first truss rigidly in place from the interior at the floor level, provided the floor is substantially completed and capable of supporting the ground bracing forces. Securely fasten the first truss to the middle of the building. Brace the bracing similar to exterior ground bracing shown at left. Set trusses from the middle toward the end of the building. Properly cross-brace the first set of trusses before removing floor braces and setting remaining trusses.

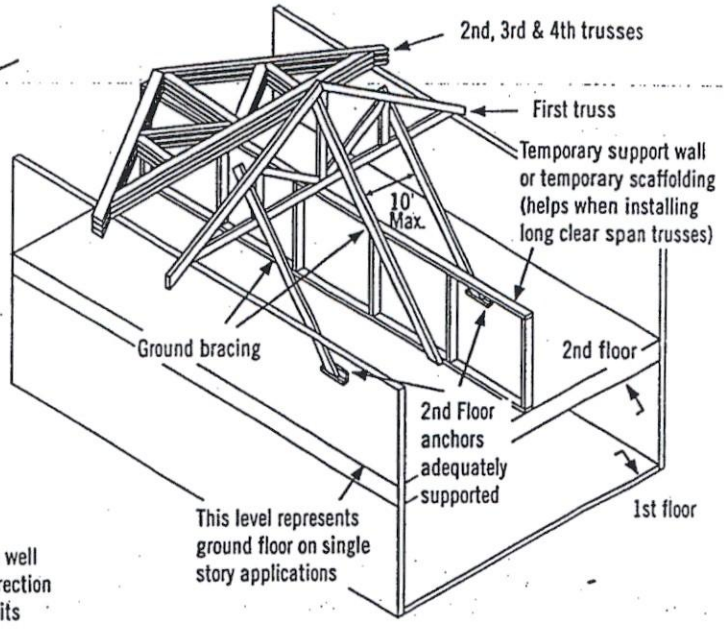

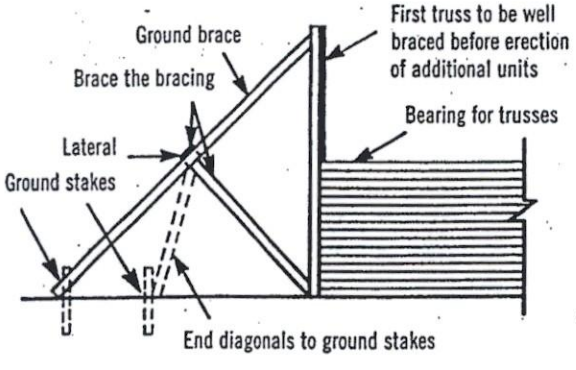

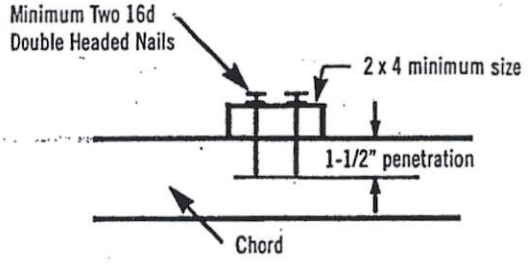

Inadequate size of bracing material or inadequate fastening is a major cause of erection dominoing.

5 Erection Tolerance

Complying with erection tolerances is critical to achieving an acceptable roof or floor line, and to accomplishing effective bracing. Setting trusses within tolerance the first time will prevent the need for the hazardous practice of respacing or adjusting trusses when roof sheathing or roof purlins are installed. Trusses leaning or bowing can cause nails to miss the top chords when sheathing is applied, and create cumulative stresses on the bracing, which is a frequent cause of dominoing.

When sheathing, make sure nails are driven into the top chord of the trusses.

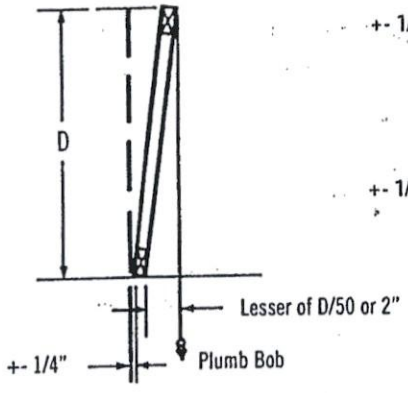

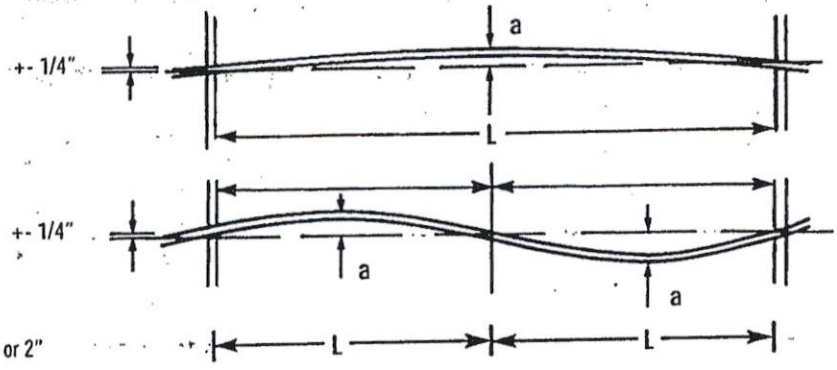

L = 16' to 32', a = 1"
L = 32' & over, a = 2"

6 Bracing

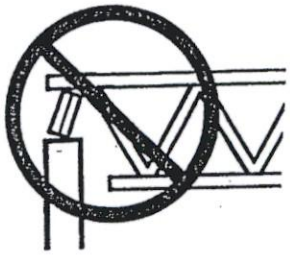

Do not install trusses on temporarily connected supports

Do not walk on unbraced trusses

Do not walk on trusses or gable ends lying flat

Nails in withdrawal (parallel to force)

All anchors, hangers, tie-downs, seats, bearing ledgers, etc., that are part of the supporting structure shall be accurately and properly placed and permanently attached before truss installation begins. No trusses shall ever be installed on anchors or ties that have temporary connections to the supporting structure.

Nailing scabs to the end of the building to brace the first truss is not recommended.
All nailing of bracing should be done so that nails are driven perpendicular to the direction of force, as shown at right.

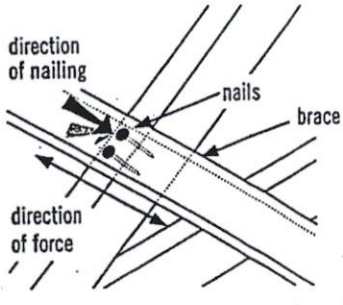

Well nailed (perpendicular to force)

7 Bracing Requirements for 3 Planes of Roof

Temporary erection bracing must be applied to three planes of the roof system to ensure stability: Plane 1) **Top Chord** (sheathing), Plane 2) **Bottom Chord** (ceiling plane), and Plane 3) **Web Member** plane or vertical plane perpendicular to trusses.

1) Top Chord Plane

Most important to the builder or erection contractor is bracing in the plane of the top chord. Truss top chords are susceptible to lateral buckling before they are braced or sheathed.

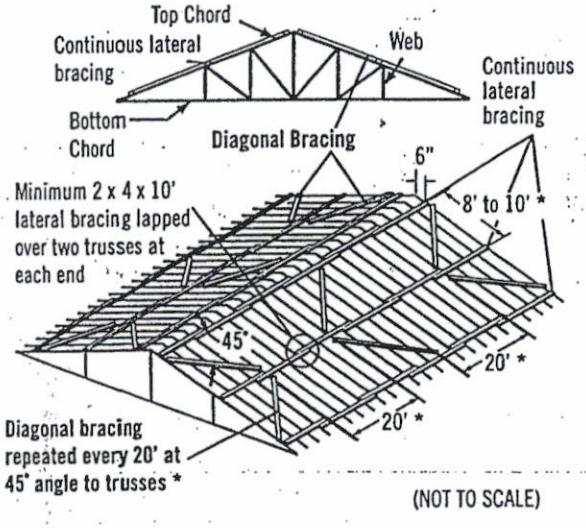

(NOT TO SCALE)

Exact spacing between trusses should be maintained as bracing is installed to avoid the hazardous practice of removing bracing to adjust spacing. This act of "adjusting spacing" can cause trusses to topple if connections are removed at the wrong time.

2) Bottom Chord Plane

In order to hold proper spacing on the bottom chord, temporary bracing is recommended on the top of the bottom chord.

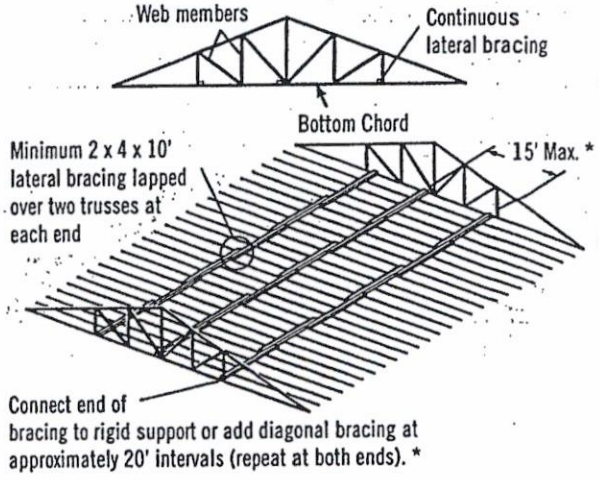

* Long spans, heavy loads or other spacing configurations may require closer spacing between lateral bracing and closer intervals between diagonals. Consult the building designer or HIB and DSB (*Recommended Design Specification for Temporary Bracing of Metal-Plate Connected Wood Trusses*) for details.

Diagonal or cross-bracing is very important!

3) Web Member Plane

"X" bracing, as shown, is critical in preventing trusses from leaning or dominoing. Repeat as shown to create a succession of rigid units.

X-bracing should be installed on vertical web members wherever possible, at or near lateral bracing. Plywood or OSB may be substituted for X-bracing.

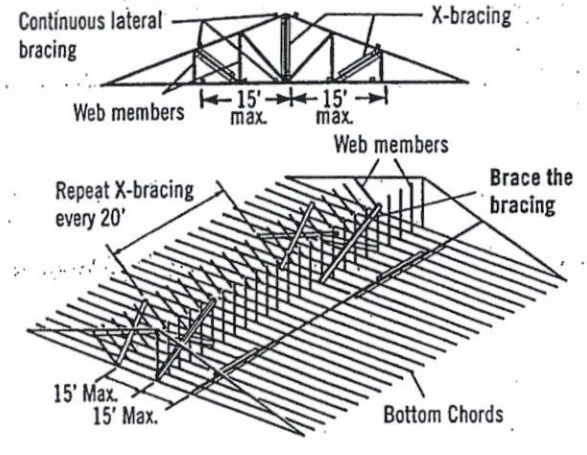

Note: Top chords and some web members are not shown, in order to make drawings more readable.

Do not use short blocks to brace individual trusses without a specific bracing plan detailing their use

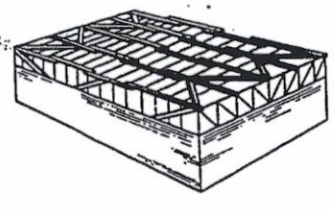

Bracing requirements using the same principles apply to parallel chord trusses

8 Stacking Materials

Do not proceed with building completion until all bracing is securely and properly in place

Never stack materials on unbraced or inadequately braced trusses

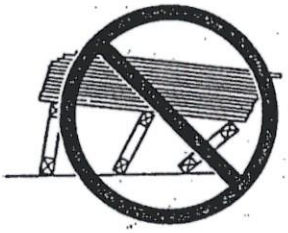

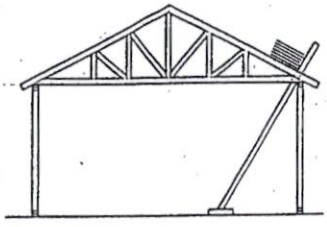

Proper distribution of construction materials is a must during construction.

Never stack materials near a peak

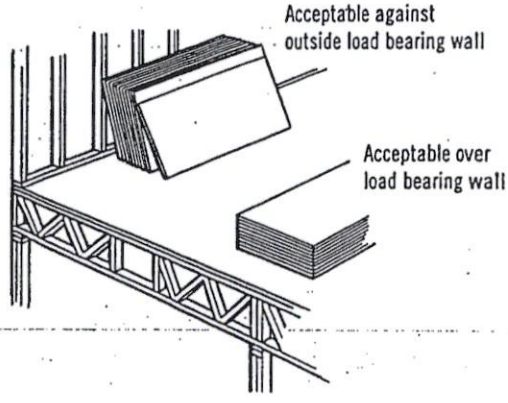

Never stack materials on the cantilever of a truss

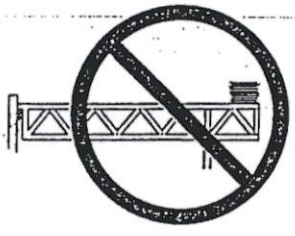

Always stack materials over two or more trusses.

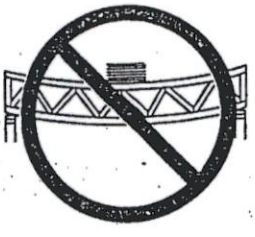

Never overload small groups or single trusses. Position load over as many trusses as possible.

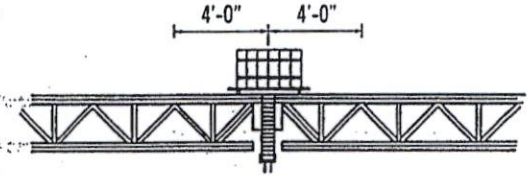

Roofing and mechanical contractors are cautioned to stack materials only along outside supporting members or directly over inside supporting members. Trusses are not designed for dynamic loads (i.e., moving vehicles). Extreme care should be taken when loading and stacking construction materials (rolled roofing, mechanical equipment, etc.) on the roof or floor system.

Never cut any structural member of a truss.

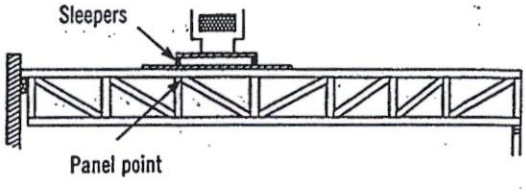

Sleepers for mechanical equipment should be located at panel points (joints) or over main supporting members, and only on trusses that have been designed for such loads.

Caution Notes

Errors in building lines and/or dimensions, or errors by others shall be corrected by the contractor or responsible construction trade subcontractor or supplier **before** erection of trusses begins.

Cutting of nonstructural overhangs is considered a part of normal erection and shall be done by the builder or erection contractor.

Any field modification that involves the cutting, drilling, or relocation of any structural truss member or connector plate shall not be done without the approval of the truss manufacturer or a licensed design professional.

The methods and procedures outlined are intended to ensure that the overall construction techniques employed will put floor and roof trusses **safely** in place in a completed structure. These recommendations for bracing wood trusses originate from the collective experience of leading technical personnel in the wood truss industry, but must, due to the nature of responsibilities involved, be presented only as a **guide** for use by a qualified building designer, builder, or erection contractor. Thus, the Wood Truss Council of America expressly disclaims any responsibility for damages arising from the use, application, or reliance on the recommendations and information contained herein.

[Selected text and figures referenced or reproduced from HIB and DSB by permission of the Truss Plate Institute, Madison, WI.]

THE CANADIAN WOOD TRUSS ASSOCIATION

L'ASSOCIATION CANADIENNE DES FABRICANTS DE FERMES DE BOIS

1400 Blair Place, Suite 210, Ottawa, ON K1J 9B8
Tel.: 613-747-5544 Fax: 613-747-6264

Wood Truss Council of America

One WTCA Center
6300 Enterprise Lane, Madison, WI 53719-1140
Tel.: 608-274-4849 Fax: 608-274-3329
wtca@woodtruss.com www.woodtruss.com

E19072240
E19072246 - E19072250
E19072392 - E19072393
E19112586 - E19112599

All work shall conform to the Ontario Building Code O. Reg. 332/12 as amended

For conventional framing roof / ceilings framing shall conform to OBC.9.23

CITY OF BRAMPTON
BUILDING DIVISION
REVIEWED
DEC 10 2019
BY MARY FRENETTE

ALPA-BARRIE

FIRM BCIN 113884
DESIGNER BCIN 25593

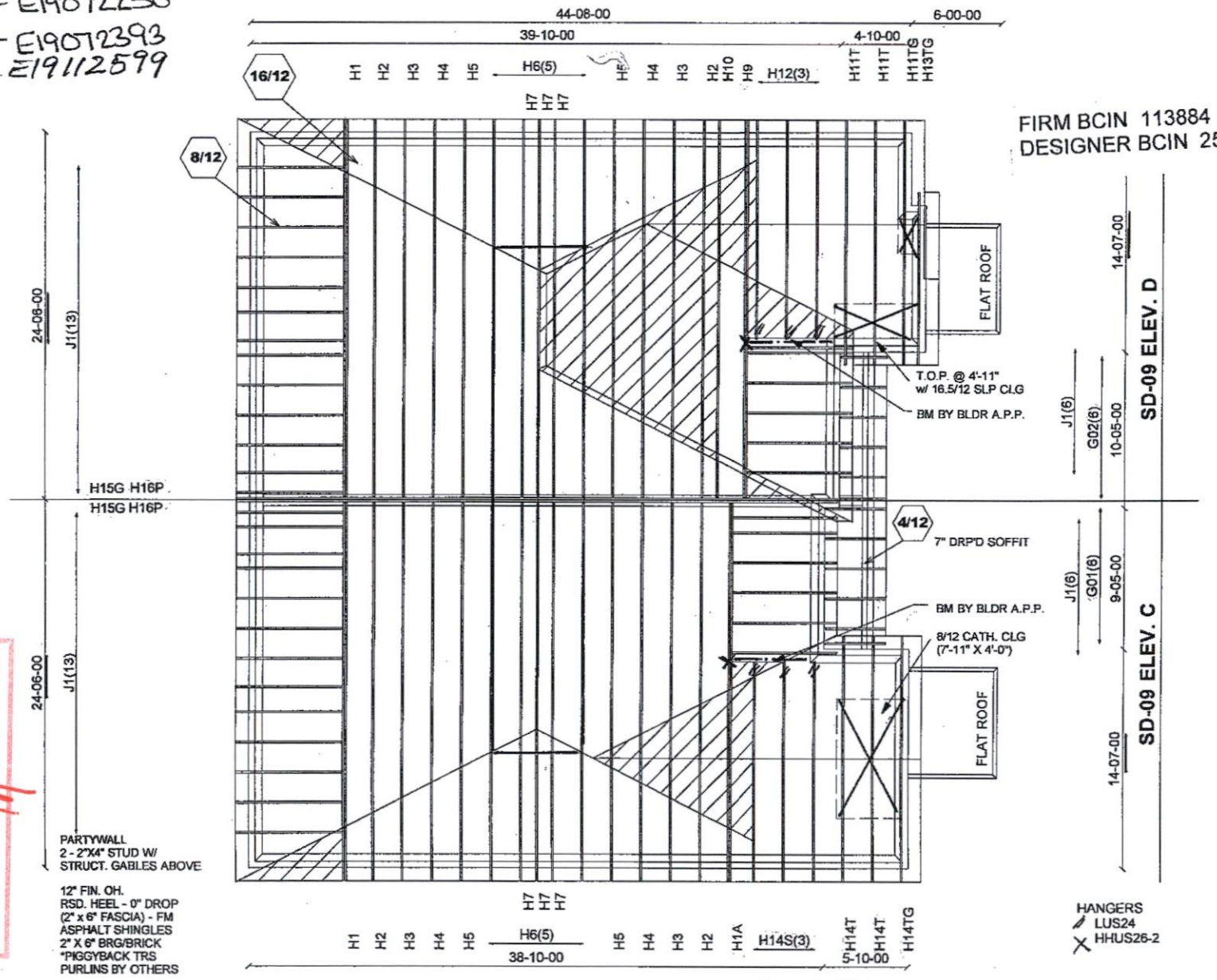

THE GERSHWIN

Mitek V. 8.2.0

ALL CONVENTIONAL FRAMING TO CONFORM WITH PART 9 O.B.C. LATEST EDITION. ROOF RAFTERS THAT CROSS OVER TRUSSES TO BE 2X4 SPF #2 @ 24" O.C WITH A VERT. POST TO THE TRUSS UNDERNEATH AT EACH CROSS POINT. VERT. POSTS LONGER THAN 6' TO HAVE LATERAL BRACING SO THAT THE DISTANCE BETWEEN END POINTS & BETWEEN ROWS OF BRACING DOES NOT EXCEED 6'

CONVENTIONAL FRAMING BY OTHERS

Job Track: 39002	Builder / Location: GOLD PARK HOMES / BRAMPTON	Model / Elevation: SD-09 / C/D	
Layout ID: 313999	Project: MCLAUGHLIN AND MAYFIELD	THESE DRAWINGS CONSTITUTE THE PROPERTY OF ALPA ROOF TRUSSES INC., SHALL NOT BE REPRODUCED, PUBLISHED, OR REDISTRIBUTED IN ANY MANNER OR UTILIZED FOR ANY PURPOSE OTHER THAN THE MANUFACTURE OF TRUSSES BY ALPA ROOF TRUSSES INC AND WILL BE RETRACTED BY ALPA ROOF TRUSSES INC IF UTLILZED FOR ANY OTHER PURPOSE.	
Plan Log: 104423	Date: 10/23/2019 Designer: AMANDA		

EWP DESIGN INC.

(905) 832-2250 FAX (905) 832-0286

RESPONSIBILITIES AND SPECIFICATIONS

RESPONSIBILITIES

1. EWP DESIGN INC. is responsible for the design of trusses as individual components.
2. It is the responsibility of others to ascertain that the design loads utilized on each drawing meet or exceed the actual dead load imposed by the structure, the live load imposed by the intended use and the snow load imposed by local building code or authorities with jurisdictions.
3. All dimensions are to be verified by the owner, contractor, architect or other authorities with jurisdictions before truss fabrication.
4. EWP DESIGN INC. bears no responsibility for the erection of trusses. Persons erecting trusses are cautioned to seek professional advice regarding the temporary and permanent bracing for the system. Bracing shown on EWP DESIGN INC. drawing is specified for the truss as a component only and forms an integral part of the truss design.
5. It is the truss manufacturer's responsibility to ensure that trusses are manufactured in conformance with specifications of EWP DESIGN INC. as outlined below.

SPECIFICATIONS

1. Trusses designed by EWP DESIGN INC. conform to the relevant section of the Ontario Building Code of Canada (Part 9 or Part 4) or to the Canadian code for farm buildings, whichever applies to the building type, as indicated on the EWP DESIGN INC. drawings, and conform to the design procedures established by the Truss Plate Institute of Canada. Unit stresses used for truss designs are as per the edition of CSA-O86 shown on EWP DESIGN INC. drawings.
2. Lumber is to be the size, species and grade as specified on EWP DESIGN INC. drawings.
3. Moisture content of lumber shall not exceed 19% in service unless specified otherwise.
4. Metal connector plates shall be applied to both faces of truss at each joint and shall be positioned as specified.
5. Top chords of trusses are assumed to be continuously braced laterally by roof sheathing or by purlins at intervals not exceeding 12.5 times the thickness of top chord member.
6. Bottom chords shall be laterally braced at intervals not exceeding 3M (10') o.c., where rigid ceiling is not applied directly to the underside of chords.

THESE DRAWINGS CONSTITUTE THE PROPERTY OF EWP DESIGN INC., SHALL NOT BE REPRODUCED, PUBLISHED, OR REDISTRIBUTED IN ANY MANNER OR UTILIZED FOR ANY PURPOSE OTHER THAN THE MANUFACTURE OF TRUSSES BY THE ALPA LUMBER GROUP, AND WILL BE RETRACTED BY EWP DESIGN INC. IF UTILIZED FOR ANY OTHER PURPOSE.

JOB NAME	TRUSS NAME	QUANTITY	PLY	JOB DESC.	DRWG NO.
313999	G01		1	TRUSS DESC. JT-39002	E-19112586

Alpa Roof Truss, Maple

Version 8.300 S Aug 9 2019 MiTek Industries, Inc. Mon Nov 11 15:04:45 2019 Page 1
ID:MF8iirlaTok7DlbpT4B71Xys4PG-LpgcI?OXV56ySer4PSDV647qZ?DjtDd0R2P1QAyKEKW

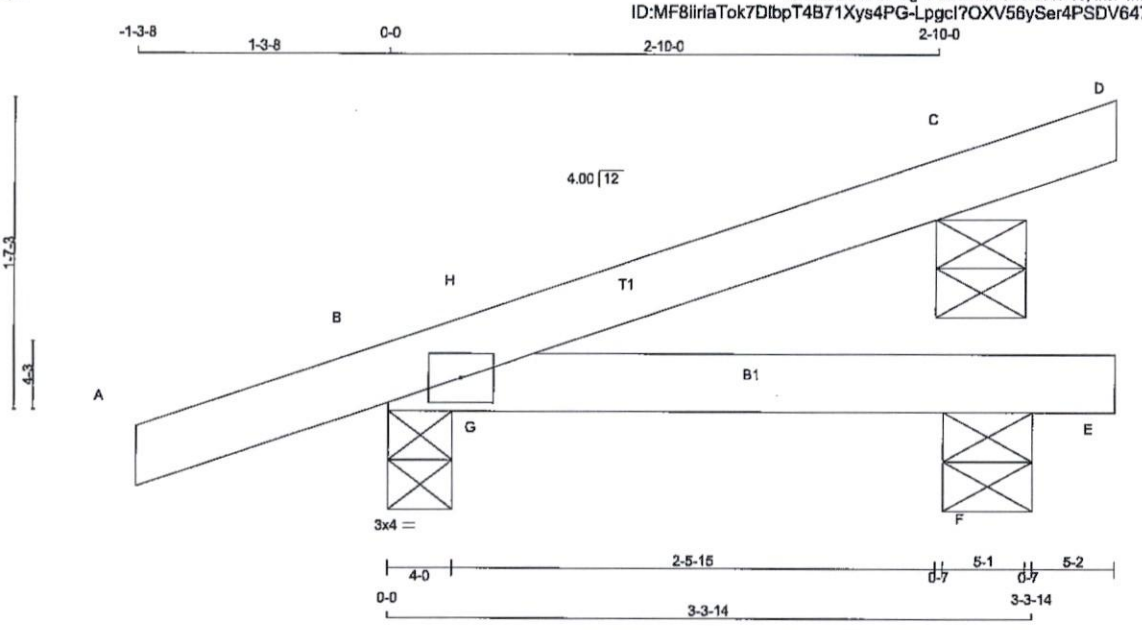

TOTAL WEIGHT = 6 X 10 = 63 lb [M]

LUMBER
N. L. G. A. RULES

CHORDS	SIZE		LUMBER	DESCR.
A - D	2x4	DRY	No.2	SPF
B - E	2x4	DRY	No.2	SPF

DRY: SEASONED LUMBER.

PLATES (table is in inches)

JT	TYPE	PLATES	W	LEN Y	X
B	TMB1-I	MT20	3.0	4.0	

NOTE: Lateral brace(s) shown shall be 2x4 SPF #2

LICENSED PROFESSIONAL ENGINEER
11/11/2019
R. TURENNE
100157040
PROVINCE OF ONTARIO

DIMENSIONS, SUPPORTS AND LOADINGS SPECIFIED BY FABRICATOR TO BE VERIFIED BY BUILDING DESIGNER

BEARINGS

JT	FACTORED GROSS REACTION VERT	HORZ	MAXIMUM FACTORED GROSS REACTION DOWN	HORZ	UPLIFT	INPUT BRG IN-SX	REQRD BRG IN-SX
B	272	0	272	0	0	4-0	1-8
F	59	0	59	0	0	5-8	1-8
C	174	0	174	0	0	5-8	5-8

BEVELED PLATE OR SHIM REQUIRED TO PROVIDE FULL BEARING SURFACE WITH TRUSS CHORD AT JT(S): C

UNFACTORED REACTIONS

JT	1ST LCASE COMBINED	MAX./MIN. COMPONENT REACTIONS SNOW	LIVE	PERM.LIVE	WIND	DEAD	SOIL
B	191	134 / 0	0 / 0	0 / 0	0 / 0	57 / 0	0 / 0
F	44	13 / 0	0 / 0	0 / 0	0 / 0	32 / 0	0 / 0
C	121	93 / 0	0 / 0	0 / 0	0 / 0	28 / 0	0 / 0

BEARING MATERIAL TO BE SPF NO.2 OR BETTER AT JOINT(S) B, F, C

BRACING
TOP CHORD TO BE SHEATHED OR MAX. PURLIN SPACING = 10.00 FT.
MAX. UNBRACED BOTTOM CHORD LENGTH = 10.00 FT OR RIGID CEILING DIRECTLY APPLIED.

ALL PITCH BREAKS AND PERIMETER CORNER JOINTS MUST BE LATERALLY RESTRAINED.

LOADING
TOTAL LOAD CASES: (5)

CHORDS MEMB. FR-TO	MAX. FACTORED FORCE (LBS)	FACTORED VERT. LOAD LC1 (PLF) FROM	TO	MAX CSI (LC)	MAX. UNBRAC LENGTH	WEBS MEMB. FR-TO	MAX. FACTORED FORCE (LBS)	MAX CSI (LC)
A- B	0 / 16	-84.9	-84.9	0.12 (5)	10.00	G- H	-99 / 5	0.00 (1)
B- H	-10 / 0	-84.9	-84.9	0.03 (4)	10.00			
H- C	0 / 2	-84.9	-84.9	0.10 (1)	10.00			
C- D	-10 / 0	-84.9	-84.9	0.03 (1)	10.00			
B- G	0 / 0	-18.5	-18.5	0.08 (1)	10.00			
G- F	0 / 0	-18.5	-18.5	0.08 (1)	10.00			
F- E	0 / 0	-18.5	-18.5	0.01 (4)	10.00			

CANTILEVER ANALYSIS HAS BEEN CONSIDERED IN THIS DESIGN

DESIGN CRITERIA

SPECIFIED LOADS:

TOP CH.	LL	=	23.3	PSF
	DL	=	6.0	PSF
BOT CH.	LL	=	0.0	PSF
	DL	=	7.4	PSF
TOTAL LOAD		=	36.7	PSF

SPACING = 24.0 IN. C/C

THIS TRUSS IS DESIGNED FOR RESIDENTIAL OR SMALL BUILDING REQUIREMENTS OF PART 9, NBCC 2010, NBCC 2015

THIS DESIGN COMPLIES WITH:
- PART 9 OF BCBC 2018 , OBC 2012 , ABC 2019
- CSA 086-09, CSA 086-14
- TPIC 2011, TPIC 2014

(55 % OF 27.2 P.S.F. G.S.L. PLUS 8.4 P.S.F. RAIN LOAD) EQUALS 23.3 P.S.F. SPECIFIED ROOF LIVE LOAD

ALLOWABLE DEFL.(LL)= L/360 (0.19")
CALCULATED VERT. DEFL.(LL) = L/ 999 (0.01")
ALLOWABLE DEFL.(TL)= L/360 (0.19")
CALCULATED VERT. DEFL.(TL) = L/ 999 (0.01")

CANTILEVER DEFLECTION:
ALLOWABLE DEFL.(TL)= L/120 (0.19")
CALCULATED VERT. DEFL.(TL) = L/ 999 (0.00")

CSI: TC=0.12/1.00 (A-B:5) , BC=0.08/1.00 (F-G:1) , WB=0.00/1.00 (G-H:1) , SSI=0.10/1.00 (A-B:5)

DOL LUMBER=1.00 NAIL=1.00 LS BEND=1.10 COMP=1.10 SHEAR=1.10 TENS= 1.10

COMPANION LIVE LOAD FACTOR = 1.00

TRUSS PLATE MANUFACTURER IS NOT RESPONSIBLE FOR QUALITY CONTROL IN THE TRUSS MANUFACTURING PLANT .

NAIL VALUES

PLATE	GRIP(DRY) (PSI) MAX	MIN	SHEAR (PLI) MAX	MIN	SECTION (PLI) MAX	MIN
MT20	618	354	1667	788	1987	1656

PLATE PLACEMENT TOL. = 0.250 inches

PLATE ROTATION TOL. = 5.0 Deg.

JSI GRIP= 0.17 (B) (INPUT = 0.90)
JSI METAL= 0.05 (B) (INPUT = 1.00)

JOB NAME	TRUSS NAME	QUANTITY	PLY	JOB DESC.	DRWG NO.
313999	G02		1	TRUSS DESC. JT-39002	E-19112587

Alpa Roof Truss, Maple

Version 8.300 S Aug 9 2019 MiTek Industries, Inc. Mon Nov 11 15:04:47 2019 Page 1
ID:MF8iiriaTok7DlbpT4B71Xys4PG-HBoMjhPn1iMgix?SWtFzBVCABovNL77JvLu7V2yKEKU

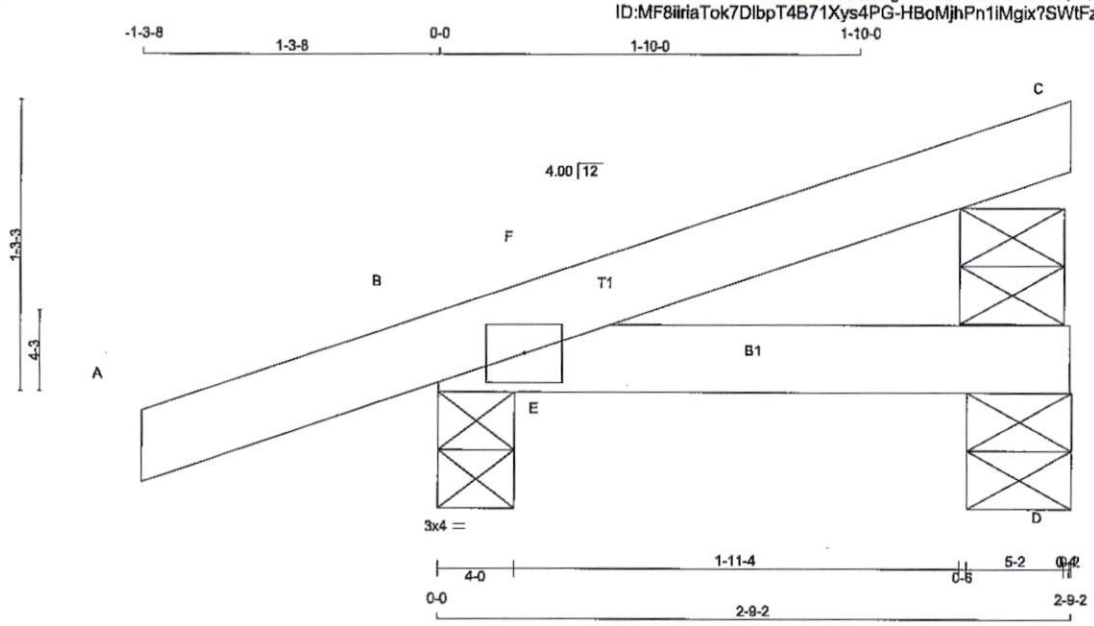

TOTAL WEIGHT = 6 X 8 = 49 lb
[M]

LUMBER
N. L. G. A. RULES

CHORDS	SIZE		LUMBER	DESCR.
A - C	2x4	DRY	No.2	SPF
B - D	2x4	DRY	No.2	SPF

DRY: SEASONED LUMBER.

PLATES (table is in inches)

JT	TYPE	PLATES	W	LEN Y	X
B	TMB1-I	MT20	3.0	4.0	

NOTE: Lateral brace(s) shown shall be 2x4 SPF #2

LICENSED PROFESSIONAL ENGINEER
11/11/2019
R. TURENNE
100157040
PROVINCE OF ONTARIO

DIMENSIONS, SUPPORTS AND LOADINGS SPECIFIED BY FABRICATOR TO BE VERIFIED BY BUILDING DESIGNER

BEARINGS

JT	FACTORED GROSS REACTION VERT	HORZ	MAXIMUM FACTORED GROSS REACTION DOWN	HORZ	UPLIFT	INPUT BRG IN-SX	REQRD BRG IN-SX
C	99	0	99	0	0	5-8	5-8
B	256	0	256	0	0	4-0	1-8
D	43	0	43	0	0	5-8 (5-6)	1-8

VALUE IN PARENTHESIS INDICATES EFFECTIVE BEARING LENGTH

BEVELED PLATE OR SHIM REQUIRED TO PROVIDE FULL BEARING SURFACE WITH TRUSS CHORD AT JT(S): C

UNFACTORED REACTIONS

JT	1ST LCASE COMBINED	MAX./MIN. COMPONENT REACTIONS SNOW	LIVE	PERM.LIVE	WIND	DEAD	SOIL
C	69	52 / 0	0 / 0	0 / 0	0 / 0	17 / 0	0 / 0
B	179	126 / 0	0 / 0	0 / 0	0 / 0	53 / 0	0 / 0
D	32	12 / 0	0 / 0	0 / 0	0 / 0	20 / 0	0 / 0

BEARING MATERIAL TO BE SPF NO.2 OR BETTER AT JOINT(S) C, B, D

BRACING
TOP CHORD TO BE SHEATHED OR MAX. PURLIN SPACING = 10.00 FT.
MAX. UNBRACED BOTTOM CHORD LENGTH = 10.00 FT OR RIGID CEILING DIRECTLY APPLIED.

ALL PITCH BREAKS AND PERIMETER CORNER JOINTS MUST BE LATERALLY RESTRAINED.

LOADING
TOTAL LOAD CASES: (5)

CHORDS

MEMB. FR-TO	MAX. FACTORED FORCE (LBS)	FACTORED VERT. LOAD LC1 (PLF) FROM	TO	MAX CSI (LC)	MAX. UNBRAC LENGTH
A- B	0 / 16	-84.9	-84.9	0.12 (5)	10.00
B- F	-10 / 0	-84.9	-84.9	0.02 (4)	10.00
F- C	0 / 2	-84.9	-84.9	0.08 (1)	10.00
B- E	0 / 0	-18.5	-18.5	0.07 (1)	10.00
E- D	0 / 0	-18.5	-18.5	0.07 (1)	10.00

WEBS

MEMB. FR-TO	MAX. FACTORED FORCE (LBS)	MAX CSI (LC)
E- F	-85 / 3	0.00 (1)

CANTILEVER ANALYSIS HAS BEEN CONSIDERED IN THIS DESIGN

DESIGN CRITERIA

SPECIFIED LOADS:

TOP CH.	LL	=	23.3	PSF
	DL	=	6.0	PSF
BOT CH.	LL	=	0.0	PSF
	DL	=	7.4	PSF
TOTAL LOAD		=	36.7	PSF

SPACING = 24.0 IN. C/C

THIS TRUSS IS DESIGNED FOR RESIDENTIAL OR SMALL BUILDING REQUIREMENTS OF PART 9, NBCC 2010, NBCC 2015

THIS DESIGN COMPLIES WITH:
- PART 9 OF BCBC 2018 , OBC 2012 , ABC 2019
- CSA 086-09, CSA 086-14
- TPIC 2011, TPIC 2014

(55 % OF 27.2 P.S.F. G.S.L. PLUS 8.4 P.S.F. RAIN LOAD) EQUALS 23.3 P.S.F. SPECIFIED ROOF LIVE LOAD

ALLOWABLE DEFL.(LL)= L/360 (0.19")
CALCULATED VERT. DEFL.(LL) = L/ 999 (0.00")
ALLOWABLE DEFL.(TL)= L/360 (0.19")
CALCULATED VERT. DEFL.(TL) = L/ 999 (0.01")

CSI: TC=0.12/1.00 (A-B:5) , BC=0.07/1.00 (D-E:1) , WB=0.00/1.00 (E-F:1) , SSI=0.09/1.00 (A-B:5)

DOL LUMBER=1.00 NAIL=1.00 LS BEND=1.10 COMP=1.10 SHEAR=1.10 TENS= 1.10

COMPANION LIVE LOAD FACTOR = 1.00

TRUSS PLATE MANUFACTURER IS NOT RESPONSIBLE FOR QUALITY CONTROL IN THE TRUSS MANUFACTURING PLANT .

NAIL VALUES

PLATE	GRIP(DRY) (PSI) MAX	MIN	SHEAR (PLI) MAX	MIN	SECTION (PLI) MAX	MIN
MT20	618	354	1667	788	1987	1656

PLATE PLACEMENT TOL. = 0.250 inches

PLATE ROTATION TOL. = 5.0 Deg.

JSI GRIP= 0.16 (B) (INPUT = 0.90)
JSI METAL= 0.04 (B) (INPUT = 1.00)

JOB NAME	TRUSS NAME	QUANTITY	PLY	JOB DESC.	DRWG NO.
313999	H1A		2	TRUSS DESC. JT-39002	E-19112588

Alpa Roof Truss, Maple

Version 8.300 S Aug 9 2019 MiTek Industries, Inc. Mon Nov 11 15:04:48 2019 Page 1

ID:MF8iiriaTok7DlbpT4B71Xys4PG-lOMlx1QQo0UXJ5af4amCkjlDPCB84QPS8?dh1VyKEKT

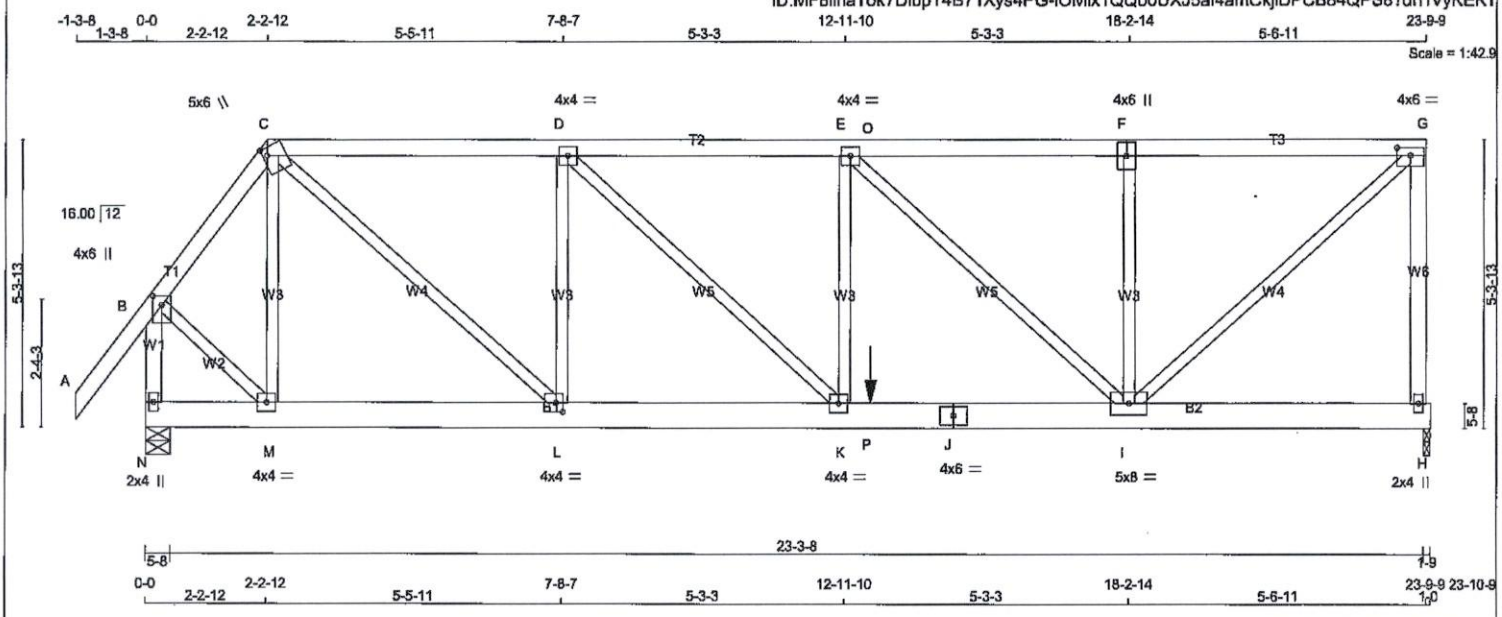

TOTAL WEIGHT = 2 X 121 = 242 lb

[M]

LUMBER

N. L. G. A. RULES

CHORDS	SIZE		LUMBER	DESCR.
A - C	2x4	DRY	No.2	SPF
C - F	2x4	DRY	No.2	SPF
F - G	2x4	DRY	No.2	SPF
H - G	2x4	DRY	No.2	SPF
N - B	2x4	DRY	No.2	SPF
N - J	2x6	DRY	No.2	SPF
J - H	2x6	DRY	No.2	SPF
ALL WEBS EXCEPT	2x3	DRY	No.2	SPF

DRY: SEASONED LUMBER.

DESIGN CONSISTS OF 2 TRUSSES BUILT SEPARATELY THEN FASTENED TOGETHER AS FOLLOWS:

CHORDS	#ROWS	SURFACE SPACING (IN)	LOAD(PLF)
TOP CHORDS : (0.122"X3") SPIRAL NAILS			
A- C	1	12	TOP
C- F	1	12	SIDE(41.1)
F- G	1	12	SIDE(41.1)
G- H	1	12	TOP
N- B	1	12	TOP
BOTTOM CHORDS : (0.122"X3") SPIRAL NAILS			
N- J	2	12	SIDE(10.0)
J- H	2	12	SIDE(10.0)
WEBS : (0.122"X3") SPIRAL NAILS			
2x3	1	6	

NAILS TO BE DRIVEN FROM ONE SIDE ONLY.

GIRDER NAILING ASSUMES NAILED HANGERS ARE FASTENED WITH MIN. 3-0 INCH NAILS.

TOP - COMPONENTS ARE LOADED FROM THE TOP AND MUST BE PLACED ON TOP EDGE OF ALL PLIES FOR THE LOAD TO BE TRANSFERRED TO EACH PLY.

SIDE - PLF SHOWN IS THE EQUIVALENT UDL APPLIED TO ONE SIDE THAT THE CORRESPONDING NAILING PATTERN SHALL BE CAPABLE OF TRANSFERING. REMAINING PLF MUST BE APPLIED ON THE OPPOSITE SIDE OR ON THE TOP.

NOTE: Lateral brace(s) shown shall be 2x4 SPF #2

LICENSED PROFESSIONAL ENGINEER
11/11/2019
R. TURENNE
100157040
PROVINCE OF ONTARIO

DIMENSIONS, SUPPORTS AND LOADINGS SPECIFIED BY FABRICATOR TO BE VERIFIED BY BUILDING DESIGNER

BEARINGS

JT	FACTORED GROSS REACTION VERT	HORZ	MAXIMUM FACTORED GROSS REACTION DOWN	HORZ	UPLIFT	INPUT BRG IN-SX	REQRD BRG IN-SX
H	2664	0	2664	0	0	1-9	1-8
N	2053	0	2053	0	0	5-8	1-8

UNFACTORED REACTIONS

JT	1ST LCASE COMBINED	MAX./MIN. COMPONENT REACTIONS SNOW	LIVE	PERM.LIVE	WIND	DEAD	SOIL
H	1891	1200 / 0	0 / 0	0 / 0	0 / 0	691 / 0	0 / 0
N	1455	937 / 0	0 / 0	0 / 0	0 / 0	518 / 0	0 / 0

BEARING MATERIAL TO BE SPF NO.2 OR BETTER AT JOINT(S) H, N

BRACING

TOP CHORD TO BE SHEATHED OR MAX. PURLIN SPACING = 4.70 FT.
MAX. UNBRACED BOTTOM CHORD LENGTH = 10.00 FT OR RIGID CEILING DIRECTLY APPLIED.

ALL PITCH BREAKS AND PERIMETER CORNER JOINTS MUST BE LATERALLY RESTRAINED.

LOADING

TOTAL LOAD CASES: (4)

CHORDS MEMB. FR-TO	MAX. FACTORED FORCE (LBS)	FACTORED VERT. LOAD (PLF) FROM	TO	LC1 CSI (LC)	MAX UNBRAC LENGTH	WEBS MEMB. FR-TO	MAX. FACTORED FORCE (LBS)	MAX CSI (LC)
A- B	0 / 48	-84.9	-84.9	0.07 (1)	10.00	M- C	-555 / 0	0.11 (1)
B- C	-1448 / 0	-84.9	-84.9	0.05 (1)	6.25	B- M	0 / 1104	0.14 (1)
C- D	-2424 / 0	-84.9	-84.9	0.21 (1)	5.57	C- L	0 / 2115	0.26 (1)
D- E	-3422 / 0	-84.9	-84.9	0.34 (1)	4.70	L- D	-1380 / 0	0.28 (1)
E- O	-2390 / 0	-84.9	-84.9	0.35 (1)	5.38	D- K	0 / 1368	0.17 (1)
O- F	-2390 / 0	-167.1	-167.1	0.35 (1)	5.38	K- E	0 / 254	0.04 (4)
F- G	-2381 / 0	-167.1	-167.1	0.56 (1)	5.01	E- I	-1416 / 0	0.70 (1)
H- G	-2585 / 0	0.0	0.0	0.60 (1)	7.06	I- F	-836 / 0	0.17 (1)
N- B	-2071 / 0	0.0	0.0	0.14 (1)	7.69	I- G	0 / 3185	0.39 (1)
N- M	0 / 0	-18.5	-18.5	0.03 (1)	10.00			
M- L	0 / 848	-18.5	-18.5	0.09 (1)	10.00			
L- K	0 / 2425	-18.5	-18.5	0.23 (1)	10.00			
K- P	0 / 3422	-18.5	-18.5	0.35 (1)	10.00			
P- J	0 / 3422	-36.4	-36.4	0.35 (1)	10.00			
J- I	0 / 3422	-36.4	-36.4	0.35 (1)	10.00			
I- H	0 / 0	-36.4	-36.4	0.08 (4)	10.00			

FACTORED CONCENTRATED LOADS (LBS)

JT	LOC.	LC1	MAX-	MAX+	FACE	DIR.	TYPE	HEEL	CONN.
P	13-5-9	-1103	-1103	—	FRONT	VERT	TOTAL	—	C1

DESIGN CRITERIA

*** SPECIAL LOADS ANALYSIS ***
GEOMETRY AND/OR BASIC LOADS CHANGED BY USER.
LOADS WERE DERIVED FROM USER INPUT
NO FURTHER MODIFICATIONS WERE MADE

SPECIFIED LOADS:

TOP CH.	LL	=	23.3	PSF
	DL	=	6.0	PSF
BOT CH.	LL	=	0.0	PSF
	DL	=	7.4	PSF
TOTAL LOAD		=	36.7	PSF

SPACING = 24.0 IN. C/C

LOADING IN FLAT SECTION BASED ON A SLOPE OF 2.00/12 MINIMUM

GIRDER TYPE: CPrimeHip
LEFT SETBACK = 2-2-12
RIGHT SETBACK = 0-0
END SETBACK = 5-10-8
END WALL WIDTH = 0-0
CORNER FRAMING TYPE: CONVENTIONAL
END JACK TYPE: CONVENTIONAL
APPLIED TO FRONT SIDE
- ADDT'L LOADS BASED ON 55 % OF GSL.
LOADS APPLIED TO FIRST 10-5-0 OF SPAN MEASURED FROM THE RIGHT.

*** NON STANDARD GIRDER ***
ADDT'L USER-DEFINED LOADS APPLIED TO ALL LOAD CASES.

THIS TRUSS IS DESIGNED FOR RESIDENTIAL OR SMALL BUILDING REQUIREMENTS OF PART 9, NBCC 2010, NBCC 2015

THIS DESIGN COMPLIES WITH:
- PART 9 OF BCBC 2018 , OBC 2012 , ABC 2019
- CSA 086-09, CSA 086-14
- TPIC 2011, TPIC 2014

(55 % OF 27.2 P.S.F. G.S.L. PLUS 8.4 P.S.F. RAIN LOAD) EQUALS 23.3 P.S.F. SPECIFIED ROOF LIVE LOAD

ALLOWABLE DEFL.(LL)= L/360 (0.79")
CALCULATED VERT. DEFL.(LL) = L/ 999 (0.06")
ALLOWABLE DEFL.(TL)= L/360 (0.79")
CALCULATED VERT. DEFL.(TL) = L/ 999 (0.12")

CSI: TC=0.60/1.00 (G-H:1) , BC=0.35/1.00 (I-K:1) , WB=0.70/1.00 (E-I:1) , SSI=0.36/1.00 (I-K:1)

DOL LUMBER=1.00 NAIL=1.00 LS BEND=1.00 COMP=1.00 SHEAR=1.00 TENS= 1.00

COMPANION LIVE LOAD FACTOR = 1.00

AUTOSOLVE RIGHT HEEL ONLY

TRUSS PLATE MANUFACTURER IS NOT RESPONSIBLE FOR QUALITY CONTROL IN THE TRUSS MANUFACTURING PLANT .

CONTINUED ON PAGE 2

JOB NAME	TRUSS NAME	QUANTITY	PLY	JOB DESC.		DRWG NO.
313999	H1A		2	TRUSS DESC.	JT-39002	E-19112588(2)

Alpa Roof Truss, Maple

ID:MF8iirlaTok7DlbpT4B71Xys4PG-Daw78MR2ZKcOxF9rel-HRGwHO9cXNptfcMfNEZxyKEKS

PLATES (table is in inches)

JT	TYPE	PLATES	W	LEN	Y	X
B	TMVW+p	MT20	4.0	6.0	2.00	2.00
C	TTWW+m	MT20	5.0	6.0	1.75	1.00
D	TMWW-t	MT20	4.0	4.0		
E	TMWW-t	MT20	4.0	4.0		
F	TSW+l	MT20	4.0	6.0		
G	TMVW-t	MT20	4.0	6.0	1.75	3.00
H	BMV1+p	MT20	2.0	4.0		
I	BMWWW-t	MT20	5.0	8.0		
J	BS-t	MT20	4.0	6.0		
K	BMWW-t	MT20	4.0	4.0		
L	BMWW-t	MT20	4.0	4.0	2.00	1.50
M	BMWW-t	MT20	4.0	4.0		
N	BMV1+p	MT20	2.0	4.0		

NAIL VALUES

PLATE	GRIP(DRY) (PSI)		SHEAR (PLI)		SECTION (PLI)	
	MAX	MIN	MAX	MIN	MAX	MIN
MT20	618	354	1667	788	1987	1656

PLATE PLACEMENT TOL. = 0.250 Inches

PLATE ROTATION TOL. = 5.0 Deg.

JSI GRIP= 0.88 (G) (INPUT = 0.90)
JSI METAL= 0.58 (J) (INPUT = 1.00)

NOTE: Lateral brace(s) shown shall be 2x4 SPF #2

LICENSED PROFESSIONAL ENGINEER
11/11/2019
R. TURENNE
100157040
PROVINCE OF ONTARIO

JOB NAME	TRUSS NAME	QUANTITY	PLY	JOB DESC.	DRWG NO.
313999	H9		2	TRUSS DESC. JT-39002	E-19112589

Alpa Roof Truss, Maple

Version 8.300 S Aug 9 2019 MiTek Industries, Inc. Mon Nov 11 15:04:50 2019 Page 1
ID:MF8iiriaTok7DlbpT4B71Xys4PG-hmUVMiSgKdkFZPk1B?ogp8qZf0oDYOVlbJ6o5NyKEKR

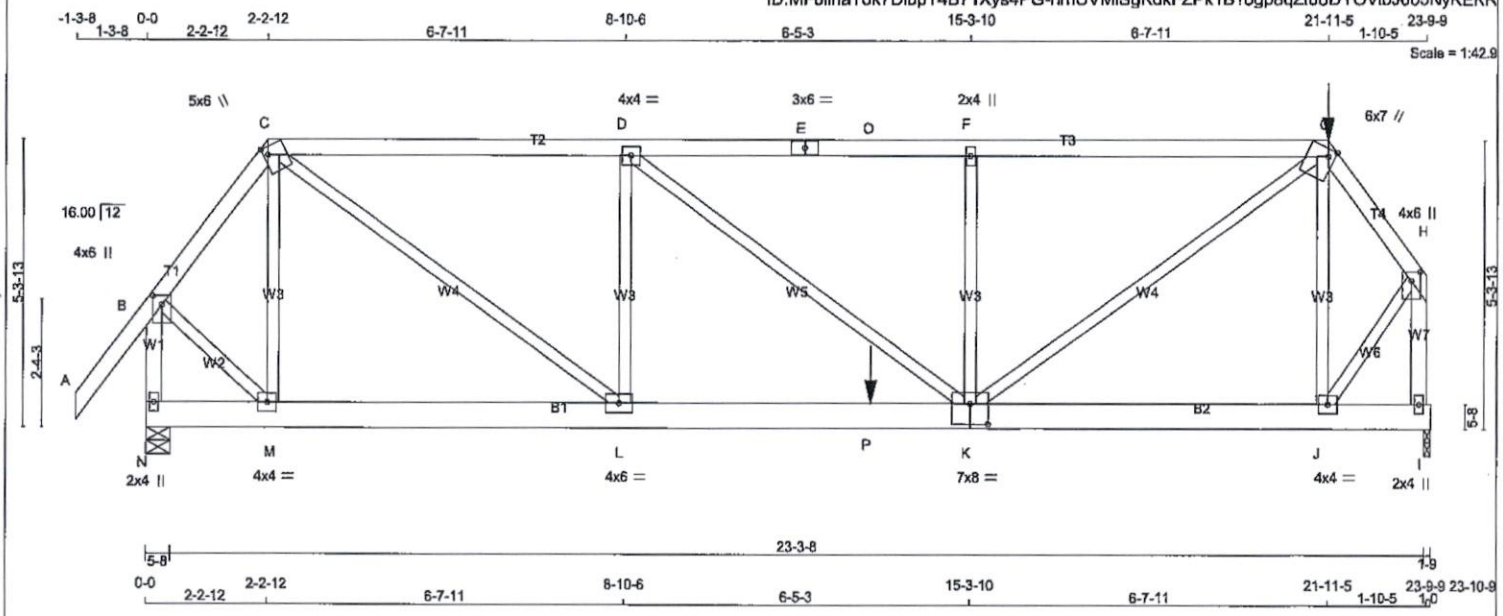

TOTAL WEIGHT = 2 X 119 = 239 lb

[M]

LUMBER

N. L. G. A. RULES

CHORDS	SIZE		LUMBER	DESCR.
A - C	2x4	DRY	No.2	SPF
C - E	2x4	DRY	No.2	SPF
E - G	2x4	DRY	No.2	SPF
G - H	2x4	DRY	No.2	SPF
N - B	2x4	DRY	No.2	SPF
I - H	2x4	DRY	No.2	SPF
N - K	2x6	DRY	No.2	SPF
K - I	2x6	DRY	No.2	SPF
ALL WEBS EXCEPT	2x3	DRY	No.2	SPF

DRY: SEASONED LUMBER.

DESIGN CONSISTS OF 2 TRUSSES BUILT SEPARATELY THEN FASTENED TOGETHER AS FOLLOWS:

CHORDS	#ROWS	SURFACE SPACING (IN)	LOAD(PLF)
TOP CHORDS : (0.122"X3") SPIRAL NAILS			
A- C	1	12	TOP
C- E	1	12	TOP
E- G	1	12	SIDE(41.1)
G- H	1	12	SIDE(61.0)
N- B	1	12	TOP
I- H	1	12	TOP
BOTTOM CHORDS : (0.122"X3") SPIRAL NAILS			
N- K	2	12	SIDE(10.0)
K- I	2	12	SIDE(10.0)
WEBS : (0.122"X3") SPIRAL NAILS			
2x3	1	6	

NAILS TO BE DRIVEN FROM ONE SIDE ONLY.

GIRDER NAILING ASSUMES NAILED HANGERS ARE FASTENED WITH MIN. 3-0 INCH NAILS.

TOP - COMPONENTS ARE LOADED FROM THE TOP AND MUST BE PLACED ON TOP EDGE OF ALL PLIES FOR THE LOAD TO BE TRANSFERRED TO EACH PLY.

NOTE: Lateral brace(s) shown shall be 2x4 SPF #2

LICENSED PROFESSIONAL ENGINEER
11/11/2019
R. TURENNE
100157040
PROVINCE OF ONTARIO

DIMENSIONS, SUPPORTS AND LOADINGS SPECIFIED BY FABRICATOR TO BE VERIFIED BY BUILDING DESIGNER

BEARINGS

JT	FACTORED GROSS REACTION VERT	HORZ	MAXIMUM FACTORED GROSS REACTION DOWN	HORZ	UPLIFT	INPUT BRG IN-SX	REQRD BRG IN-SX
N	2056	0	2056	0	0	5-8	1-8
I	2628	0	2628	0	0	1-9	1-8

UNFACTORED REACTIONS

JT	1ST LCASE COMBINED	MAX./MIN. COMPONENT REACTIONS SNOW	LIVE	PERM.LIVE	WIND	DEAD	SOIL
N	1457	939 / 0	0 / 0	0 / 0	0 / 0	519 / 0	0 / 0
I	1866	1181 / 0	0 / 0	0 / 0	0 / 0	686 / 0	0 / 0

BEARING MATERIAL TO BE SPF NO.2 OR BETTER AT JOINT(S) N, I

BRACING

TOP CHORD TO BE SHEATHED OR MAX. PURLIN SPACING = 4.43 FT.
MAX. UNBRACED BOTTOM CHORD LENGTH = 10.00 FT OR RIGID CEILING DIRECTLY APPLIED.

ALL PITCH BREAKS AND PERIMETER CORNER JOINTS MUST BE LATERALLY RESTRAINED.

LOADING

TOTAL LOAD CASES: (4)

CHORDS

MEMB. FR-TO	MAX. FACTORED FORCE (LBS)	FACTORED VERT. LOAD (PLF) FROM	TO	LC1 MAX CSI (LC)	MAX. UNBRAC LENGTH
A- B	0 / 48	-84.9	-84.9	0.07 (1)	10.00
B- C	-1395 / 0	-84.9	-84.9	0.05 (1)	6.25
C- D	-2819 / 0	-84.9	-84.9	0.32 (1)	5.13
D- E	-3230 / 0	-84.9	-84.9	0.59 (1)	4.44
E- O	-3230 / 0	-84.9	-84.9	0.59 (1)	4.44
O- F	-3230 / 0	-167.1	-167.1	0.59 (1)	4.44
F- G	-3229 / 0	-167.1	-167.1	0.61 (1)	4.43
G- H	-1714 / 0	-84.9	-84.9	0.04 (1)	6.25
N- B	-2004 / 0	0.0	0.0	0.13 (1)	7.78
I- H	-2685 / 0	0.0	0.0	0.21 (1)	6.96
N- M	0 / 0	-18.5	-18.5	0.03 (1)	10.00
M- L	0 / 813	-18.5	-18.5	0.24 (1)	10.00
L- P	0 / 2819	-18.5	-18.5	0.70 (1)	10.00
P- K	0 / 2819	-36.4	-36.4	0.70 (1)	10.00
K- J	0 / 995	-36.4	-36.4	0.14 (4)	10.00
J- I	0 / 0	-36.4	-36.4	0.10 (4)	10.00

WEBS

MEMB. FR-TO	MAX. FACTORED FORCE (LBS)	MAX CSI (LC)
M- C	-705 / 0	0.14 (1)
J- G	-950 / 0	0.19 (1)
B- M	0 / 1064	0.13 (1)
J- H	0 / 1592	0.20 (1)
C- L	0 / 2491	0.31 (1)
L- D	-870 / 0	0.18 (1)
D- K	0 / 518	0.06 (1)
K- F	-1075 / 0	0.22 (1)
K- G	0 / 2776	0.34 (1)

FACTORED CONCENTRATED LOADS (LBS)

JT	LOC.	LC1	MAX-	MAX+	FACE	DIR.	TYPE	HEEL	CONN.
G	21-11-5	-120	-120	—	FRONT	VERT	TOTAL	—	C1
P	13-5-9	-1103	-1103	—	FRONT	VERT	TOTAL	—	C1

DESIGN CRITERIA

*** SPECIAL LOADS ANALYSIS ***
GEOMETRY AND/OR BASIC LOADS CHANGED BY USER.
LOADS WERE DERIVED FROM USER INPUT
NO FURTHER MODIFICATIONS WERE MADE

SPECIFIED LOADS:

TOP CH.	LL	=	23.3	PSF
	DL	=	6.0	PSF
BOT CH.	LL	=	0.0	PSF
	DL	=	7.4	PSF
TOTAL LOAD		=	36.7	PSF

SPACING = 24.0 IN. C/C

LOADING IN FLAT SECTION BASED ON A SLOPE OF 2.00/12 MINIMUM

GIRDER TYPE: CPrimeHip
LEFT SETBACK = 2-2-12
RIGHT SETBACK = 1-11-5
END SETBACK = 5-10-8
END WALL WIDTH = 0-0
CORNER FRAMING TYPE: CONVENTIONAL
END JACK TYPE: CONVENTIONAL
APPLIED TO FRONT SIDE
- ADDT'L LOADS BASED ON 55 % OF GSL.
LOADS APPLIED TO FIRST 10-5-0 OF SPAN MEASURED FROM THE RIGHT.

*** NON STANDARD GIRDER ***
ADDT'L USER-DEFINED LOADS APPLIED TO ALL LOAD CASES.

THIS TRUSS IS DESIGNED FOR RESIDENTIAL OR SMALL BUILDING REQUIREMENTS OF PART 9, NBCC 2010, NBCC 2015

THIS DESIGN COMPLIES WITH:
- PART 9 OF BCBC 2018 , OBC 2012 , ABC 2019
- CSA 086-09, CSA 086-14
- TPIC 2011, TPIC 2014

(55 % OF 27.2 P.S.F. G.S.L. PLUS 8.4 P.S.F. RAIN LOAD) EQUALS 23.3 P.S.F. SPECIFIED ROOF LIVE LOAD

ALLOWABLE DEFL.(LL)= L/360 (0.79")
CALCULATED VERT. DEFL.(LL) = L/ 999 (0.10")
ALLOWABLE DEFL.(TL)= L/360 (0.79")
CALCULATED VERT. DEFL.(TL) = L/ 999 (0.20")

CSI: TC=0.61/1.00 (F-G:1) , BC=0.70/1.00 (K-L:1) , WB=0.34/1.00 (G-K:1) , SSI=0.28/1.00 (F-G:1)

DOL LUMBER=1.00 NAIL=1.00 LS BEND=1.00 COMP=1.00 SHEAR=1.00 TENS= 1.00

COMPANION LIVE LOAD FACTOR = 1.00

AUTOSOLVE RIGHT HEEL ONLY

TRUSS PLATE MANUFACTURER IS NOT RESPONSIBLE FOR QUALITY CONTROL IN THE TRUSS MANUFACTURING PLANT .

CONTINUED ON PAGE 2

JOB NAME	TRUSS NAME	QUANTITY	PLY	JOB DESC.	DRWG NO.
313999	H9		2	TRUSS DESC. JT-39002	E-19112589(2)

Alpa Roof Truss, Maple

ID:MF8iiriaTok7DlbpT4B71Xys4PG-hmUVMiSqKdkFZPk1B?ogp8qZf0oDYOVlbJ6o5NyKEKR

PLATES (table is in inches)

JT	TYPE	PLATES	W	LEN	Y	X
B	TMVW+p	MT20	4.0	6.0	2.00	2.00
C	TTWW+m	MT20	5.0	6.0	1.75	1.00
D	TMWW-t	MT20	4.0	4.0		
E	TS-t	MT20	3.0	6.0		
F	TMW+w	MT20	2.0	4.0		
G	TTWW+m	MT20	6.0	7.0	Edge	1.50
H	TMVW+p	MT20	4.0	6.0	2.00	2.00
I	BMV1+p	MT20	2.0	4.0		
J	BMWW-t	MT20	4.0	4.0		
K	BSWWW-t	MT20	7.0	8.0	4.50	4.00
L	BMWW-t	MT20	4.0	6.0		
M	BMWW-t	MT20	4.0	4.0		
N	BMV1+p	MT20	2.0	4.0		

Edge - INDICATES REFERENCE CORNER OF PLATE TOUCHES EDGE OF CHORD.

NOTE: Lateral brace(s) shown shall be 2x4 SPF #2

LICENSED PROFESSIONAL ENGINEER
11/11/2019
R. TURENNE
100157040
PROVINCE OF ONTARIO

NAIL VALUES

PLATE	GRIP(DRY) (PSI) MAX	MIN	SHEAR (PLI) MAX	MIN	SECTION (PLI) MAX	MIN
MT20	618	354	1667	788	1987	1656

PLATE PLACEMENT TOL. = 0.250 inches

PLATE ROTATION TOL. = 5.0 Deg.

JSI GRIP= 0.85 (J) (INPUT = 0.90)
JSI METAL= 0.30 (K) (INPUT = 1.00)

JOB NAME	TRUSS NAME	QUANTITY	PLY	JOB DESC.	DRWG NO.
313999	H10		1	TRUSS DESC. JT-39002	E-19112590

Alpa Roof Truss, Maple

Version 8.300 S Aug 9 2019 MiTek Industries, Inc. Mon Nov 11 15:04:52 2019 Page 1

ID:MF8iiriaTok7DlbpT4B71Xys4PG-e9cFmOTwsF_zoiuQJQr8uZvrMpYz0Dr22dbuAGyKEKP

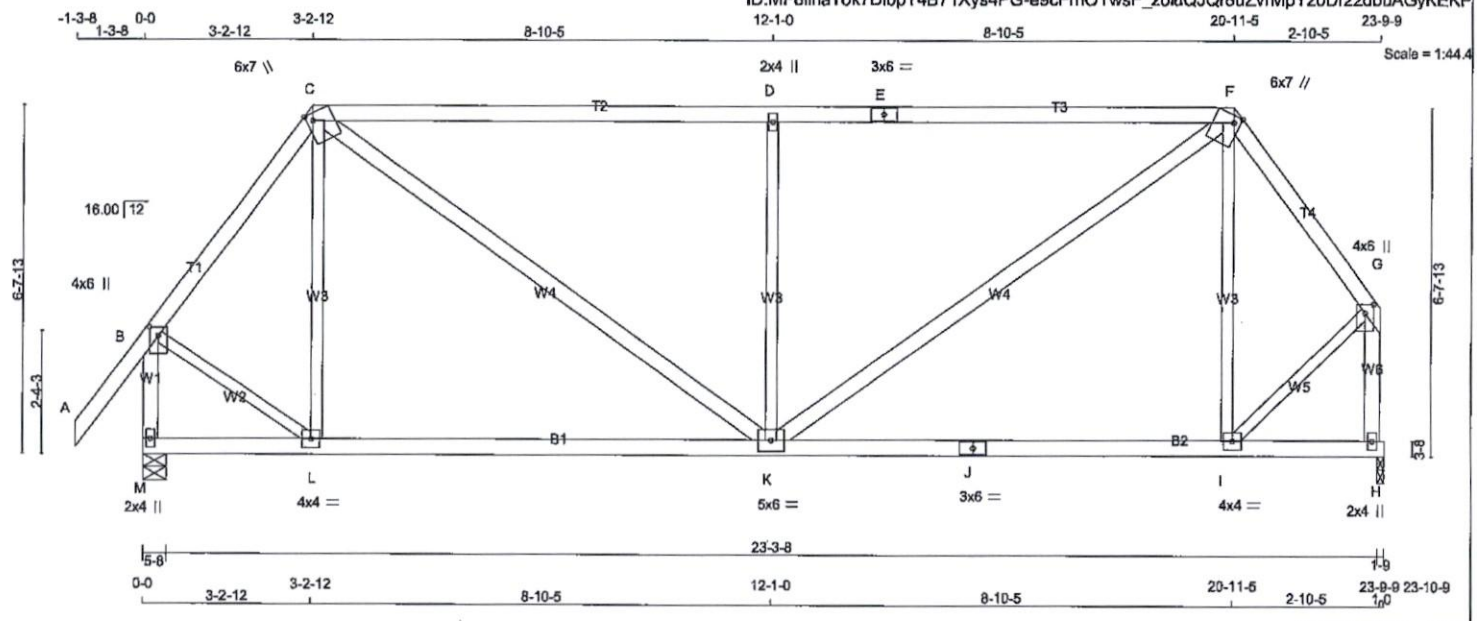

TOTAL WEIGHT = 112 lb

[M]

LUMBER

N. L. G. A. RULES

CHORDS	SIZE		LUMBER	DESCR.
A - C	2x4	DRY	No.2	SPF
C - E	2x4	DRY	2100F 1.8E	SPF
E - F	2x4	DRY	2100F 1.8E	SPF
F - G	2x4	DRY	No.2	SPF
M - B	2x4	DRY	No.2	SPF
H - G	2x4	DRY	No.2	SPF
M - J	2x4	DRY	No.2	SPF
J - H	2x4	DRY	No.2	SPF
ALL WEBS	2x3	DRY	No.2	SPF
EXCEPT				
C - K	2x4	DRY	No.2	SPF
K - F	2x4	DRY	No.2	SPF

DRY: SEASONED LUMBER.

PLATES (table is in inches)

JT	TYPE	PLATES	W	LEN	Y	X
B	TMVW+p	MT20	4.0	6.0	2.00	2.00
C	TTWW+m	MT20	6.0	7.0	Edge	1.50
D	TMW+w	MT20	2.0	4.0		
E	TS-t	MT20	3.0	6.0		
F	TTWW+m	MT20	6.0	7.0	Edge	1.50
G	TMVW+p	MT20	4.0	6.0	2.00	2.00
H	BMV1+p	MT20	2.0	4.0		
I	BMWW-t	MT20	4.0	4.0		
J	BS-t	MT20	3.0	6.0		
K	BMWWW-t	MT20	5.0	6.0		
L	BMWW-t	MT20	4.0	4.0		
M	BMV1+p	MT20	2.0	4.0		

Edge - INDICATES REFERENCE CORNER OF PLATE TOUCHES EDGE OF CHORD.

NOTE: Lateral brace(s) shown shall be 2x4 SPF #2

LICENSED PROFESSIONAL ENGINEER
11/11/2019
R. TURENNE
100157040
PROVINCE OF ONTARIO

DIMENSIONS, SUPPORTS AND LOADINGS SPECIFIED BY FABRICATOR TO BE VERIFIED BY BUILDING DESIGNER

BEARINGS

JT	FACTORED GROSS REACTION VERT	HORZ	MAXIMUM FACTORED GROSS REACTION DOWN	HORZ	UPLIFT	INPUT BRG IN-SX	REQRD BRG IN-SX
M	1349	0	1349	0	0	5-8	2-0
H	1230	0	1230	0	0	1-9	1-8

UNFACTORED REACTIONS

JT	1ST LCASE COMBINED	MAX./MIN. COMPONENT REACTIONS SNOW	LIVE	PERM.LIVE	WIND	DEAD	SOIL
M	956	620 / 0	0 / 0	0 / 0	0 / 0	336 / 0	0 / 0
H	873	554 / 0	0 / 0	0 / 0	0 / 0	319 / 0	0 / 0

BEARING MATERIAL TO BE SPF NO.2 OR BETTER AT JOINT(S) M, H

BRACING

TOP CHORD TO BE SHEATHED OR MAX. PURLIN SPACING = 5.09 FT.
MAX. UNBRACED BOTTOM CHORD LENGTH = 10.00 FT OR RIGID CEILING DIRECTLY APPLIED.

ALL PITCH BREAKS AND PERIMETER CORNER JOINTS MUST BE LATERALLY RESTRAINED.

LOADING

TOTAL LOAD CASES: (4)

CHORDS

MEMB. FR-TO	MAX. FACTORED FORCE (LBS)	FACTORED VERT. LOAD LC1 (PLF) FROM	TO	MAX CSI (LC)	MAX. UNBRAC LENGTH
A- B	0 / 48	-84.9	-84.9	0.12 (1)	10.00
B- C	-944 / 0	-84.9	-84.9	0.17 (1)	6.18
C- D	-1297 / 0	-84.9	-84.9	0.86 (1)	5.09
D- E	-1298 / 0	-84.9	-84.9	0.86 (1)	5.09
E- F	-1298 / 0	-84.9	-84.9	0.86 (1)	5.09
F- G	-857 / 0	-84.9	-84.9	0.13 (1)	6.25
M- B	-1345 / 0	0.0	0.0	0.17 (1)	6.99
H- G	-1233 / 0	0.0	0.0	0.19 (1)	7.23
M- L	0 / 0	-18.5	-18.5	0.20 (4)	10.00
L- K	0 / 559	-18.5	-18.5	0.36 (4)	10.00
K- J	0 / 505	-18.5	-18.5	0.36 (4)	10.00
J- I	0 / 505	-18.5	-18.5	0.36 (4)	10.00
I- H	0 / 0	-18.5	-18.5	0.21 (4)	10.00

WEBS

MEMB. FR-TO	MAX. FACTORED FORCE (LBS)	MAX CSI (LC)
L- C	-196 / 23	0.14 (1)
C- K	0 / 907	0.15 (1)
K- D	-921 / 0	0.67 (1)
K- F	0 / 972	0.16 (1)
I- F	-288 / 0	0.21 (1)
B- L	0 / 652	0.15 (1)
I- G	0 / 663	0.15 (1)

DESIGN CRITERIA

SPECIFIED LOADS:

TOP CH.	LL	=	23.3	PSF
	DL	=	6.0	PSF
BOT CH.	LL	=	0.0	PSF
	DL	=	7.4	PSF
TOTAL LOAD		=	36.7	PSF

SPACING = 24.0 IN. C/C

LOADING IN FLAT SECTION BASED ON A SLOPE OF 2.00/12 MINIMUM

THIS TRUSS IS DESIGNED FOR RESIDENTIAL OR SMALL BUILDING REQUIREMENTS OF PART 9, NBCC 2010, NBCC 2015

THIS DESIGN COMPLIES WITH:
- PART 9 OF BCBC 2018 , OBC 2012 , ABC 2019
- CSA 086-09, CSA 086-14
- TPIC 2011, TPIC 2014

(55 % OF 27.2 P.S.F. G.S.L. PLUS 8.4 P.S.F. RAIN LOAD) EQUALS 23.3 P.S.F. SPECIFIED ROOF LIVE LOAD

ALLOWABLE DEFL.(LL)= L/360 (0.79")
CALCULATED VERT. DEFL.(LL) = L/ 999 (0.03")
ALLOWABLE DEFL.(TL)= L/360 (0.79")
CALCULATED VERT. DEFL.(TL) = L/ 999 (0.12")

CSI: TC=0.86/1.00 (D-F:1) , BC=0.36/1.00 (K-L:4) , WB=0.67/1.00 (D-K:1) , SSI=0.36/1.00 (C-D:1)

DOL LUMBER=1.00 NAIL=1.00 LS BEND=1.10 COMP=1.10 SHEAR=1.10 TENS= 1.10

COMPANION LIVE LOAD FACTOR = 1.00

TRUSS PLATE MANUFACTURER IS NOT RESPONSIBLE FOR QUALITY CONTROL IN THE TRUSS MANUFACTURING PLANT .

NAIL VALUES

PLATE	GRIP(DRY) (PSI) MAX	MIN	SHEAR (PLI) MAX	MIN	SECTION (PLI) MAX	MIN
MT20	618	354	1667	788	1987	1656

PLATE PLACEMENT TOL. = 0.250 inches

PLATE ROTATION TOL. = 5.0 Deg.

JSI GRIP= 0.89 (K) (INPUT = 0.90)
JSI METAL= 0.37 (J) (INPUT = 1.00)

JOB NAME	TRUSS NAME	QUANTITY	PLY	JOB DESC.		DRWG NO.
313999	H11T		1	TRUSS DESC.	JT-39002	E-19112591

Alpa Roof Truss, Maple

Version 8.300 S Aug 9 2019 MiTek Industries, Inc. Mon Nov 11 15:04:53 2019 Page 1
ID:MF8iiriaTok7DlbpT4B71Xys4PG-6L9e_kUYdY6pQsTct7MNRmS8pDwRlm5BHHLSiiyKEKO

Scale = 1:90.9

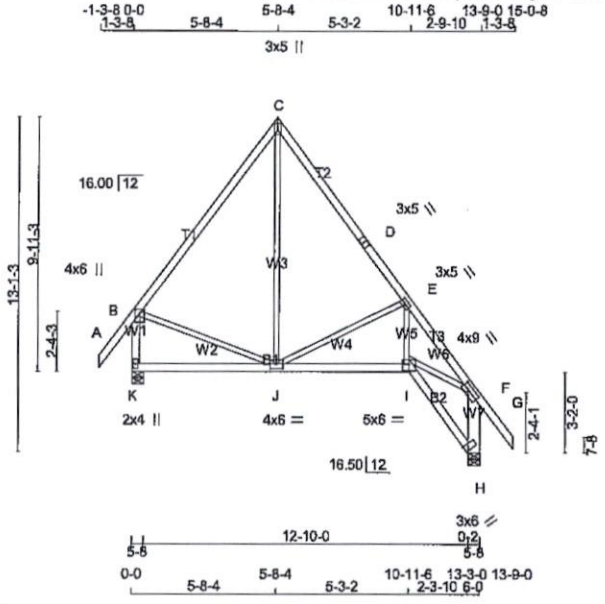

TOTAL WEIGHT = 2 X 77 = 154 lb

[M][F]

LUMBER

N. L. G. A. RULES

CHORDS	SIZE		LUMBER	DESCR.
A - C	2x4	DRY	1650F 1.6E	SPF
C - D	2x4	DRY	No.2	SPF
D - G	2x4	DRY	No.2	SPF
K - B	2x4	DRY	No.2	SPF
H - F	2x6	DRY	No.2	SPF
K - I	2x4	DRY	No.2	SPF
I - H	2x4	DRY	No.2	SPF
ALL WEBS EXCEPT	2x3	DRY	No.2	SPF

DRY: SEASONED LUMBER.

PLATES (table is in inches)

JT	TYPE	PLATES	W	LEN	Y	X
B	TMVW+p	MT20	4.0	6.0	2.00	2.00
C	TTW+p	MT20	3.0	5.0	2.00	Edge
D	TS-t	MT20	3.0	5.0		
E	TMWW-t	MT20	3.0	5.0	1.50	1.50
F	TMVW-t	MT20	4.0	9.0	2.00	3.00
H	BVM1+I	MT20	3.0	6.0	Edge	
I	BBWW-I	MT20	5.0	6.0	3.00	3.00
J	BMWWW-t	MT20	4.0	6.0		
K	BMV1+p	MT20	2.0	4.0		

Edge - INDICATES REFERENCE CORNER OF PLATE TOUCHES EDGE OF CHORD.

NOTE: Lateral brace(s) shown shall be 2x4 SPF #2

LICENSED PROFESSIONAL ENGINEER
11/11/2019
R. TURENNE
100157040
PROVINCE OF ONTARIO

DIMENSIONS, SUPPORTS AND LOADINGS SPECIFIED BY FABRICATOR TO BE VERIFIED BY BUILDING DESIGNER

BEARINGS

JT	FACTORED GROSS REACTION VERT	HORZ	MAXIMUM FACTORED GROSS REACTION DOWN	HORZ	UPLIFT	INPUT BRG IN-SX	REQRD BRG IN-SX
K	830	0	830	0	0	5-8	1-8
H	830	0	830	0	0	5-8 (5-6)	5-6

VALUE IN PARENTHESIS INDICATES EFFECTIVE BEARING LENGTH

BEVELED PLATE OR SHIM REQUIRED TO PROVIDE FULL BEARING SURFACE WITH TRUSS CHORD AT JT(S): H

UNFACTORED REACTIONS

JT	1ST LCASE COMBINED	MAX./MIN. COMPONENT REACTIONS SNOW	LIVE	PERM.LIVE	WIND	DEAD	SOIL
K	587	386 / 0	0 / 0	0 / 0	0 / 0	201 / 0	0 / 0
H	587	386 / 0	0 / 0	0 / 0	0 / 0	201 / 0	0 / 0

BEARING MATERIAL TO BE SPF NO.2 OR BETTER AT JOINT(S) K, H

BRACING

TOP CHORD TO BE SHEATHED OR MAX. PURLIN SPACING = 5.71 FT.
MAX. UNBRACED BOTTOM CHORD LENGTH = 10.00 FT OR RIGID CEILING DIRECTLY APPLIED.

ALL PITCH BREAKS AND PERIMETER CORNER JOINTS MUST BE LATERALLY RESTRAINED.

LOADING

TOTAL LOAD CASES: (4)

CHORDS

MEMB. FR-TO	MAX. FACTORED FORCE (LBS)	FACTORED VERT. LOAD LC1 (PLF) FROM	TO	MAX CSI (LC)	MAX. UNBRAC LENGTH
A- B	0 / 48	-84.9	-84.9	0.10 (1)	10.00
B- C	-425 / 0	-84.9	-84.9	0.30 (1)	6.25
C- D	-456 / 0	-84.9	-84.9	0.28 (1)	6.25
D- E	-456 / 0	-84.9	-84.9	0.28 (1)	6.25
E- F	-1132 / 0	-84.9	-84.9	0.23 (1)	5.71
F- G	0 / 48	-84.9	-84.9	0.12 (1)	10.00
K- B	-789 / 0	0.0	0.0	0.10 (1)	7.81
H- F	-804 / 0	0.0	0.0	0.08 (1)	7.81
K- J	0 / 0	-18.5	-18.5	0.16 (4)	10.00
J- I	0 / 697	-18.5	-18.5	0.22 (4)	10.00
I- H	0 / 0	-18.5	-18.5	0.04 (4)	10.00

WEBS

MEMB. FR-TO	MAX. FACTORED FORCE (LBS)	MAX CSI (LC)
J- C	0 / 259	0.06 (4)
J- E	-497 / 0	0.29 (1)
I- E	0 / 389	0.09 (1)
B- J	0 / 270	0.06 (1)
I- F	0 / 781	0.18 (1)

DESIGN CRITERIA

SPECIFIED LOADS:

TOP CH.	LL =	23.3	PSF
	DL =	6.0	PSF
BOT CH.	LL =	0.0	PSF
	DL =	7.4	PSF
TOTAL LOAD	=	36.7	PSF

SPACING = 24.0 IN. C/C

THIS TRUSS IS DESIGNED FOR RESIDENTIAL OR SMALL BUILDING REQUIREMENTS OF PART 9, NBCC 2010, NBCC 2015

THIS DESIGN COMPLIES WITH:
- PART 9 OF BCBC 2018 , OBC 2012 , ABC 2019
- CSA 086-09, CSA 086-14
- TPIC 2011, TPIC 2014

(55 % OF 27.2 P.S.F. G.S.L. PLUS 8.4 P.S.F. RAIN LOAD) EQUALS 23.3 P.S.F. SPECIFIED ROOF LIVE LOAD

ALLOWABLE DEFL.(LL)= L/360 (0.46")
CALCULATED VERT. DEFL.(LL) = L/ 999 (0.02")
ALLOWABLE DEFL.(TL)= L/360 (0.46")
CALCULATED VERT. DEFL.(TL) = L/ 999 (0.05")

CSI: TC=0.30/1.00 (B-C:1) , BC=0.22/1.00 (I-J:4) , WB=0.29/1.00 (E-J:1) , SSI=0.12/1.00 (C-E:1)

DOL LUMBER=1.00 NAIL=1.00 LS BEND=1.10 COMP=1.10 SHEAR=1.10 TENS= 1.10

COMPANION LIVE LOAD FACTOR = 1.00

AUTOSOLVE LEFT HEEL ONLY

TRUSS PLATE MANUFACTURER IS NOT RESPONSIBLE FOR QUALITY CONTROL IN THE TRUSS MANUFACTURING PLANT .

NAIL VALUES

PLATE	GRIP(DRY) (PSI) MAX	MIN	SHEAR (PLI) MAX	MIN	SECTION (PLI) MAX	MIN
MT20	618	354	1667	788	1987	1656

PLATE PLACEMENT TOL. = 0.250 inches

PLATE ROTATION TOL. = 5.0 Deg.

JSI GRIP= 0.81 (D) (INPUT = 0.90)
JSI METAL= 0.31 (I) (INPUT = 1.00)

JOB NAME	TRUSS NAME	QUANTITY	PLY	JOB DESC.	DRWG NO.
313999	H11TG		1	TRUSS DESC. JT-39002	E-19112592

Alpa Roof Truss, Maple

Version 6.300 S Aug 9 2019 MiTek Industries, Inc. Mon Nov 11 15:04:54 2019 Page 1
ID:MF8iiriaTok7DfbpT4B71Xys4PG-aXj0B4VAOsEg101oQrtcz__JZdGgUDLLWx4?E8yKEKN

-1-3-8 0-0 1-8-4 3-8-4 5-8-4 7-8-4 9-8-4 10-11-6 11-8-4 13-9-0 15-0-8
1-3-8 1-8-4 2-0-0 2-0-0 2-0-0 2-0-0 1-3-2 8-14 2-0-12 1-3-8

Scale = 1:90.9

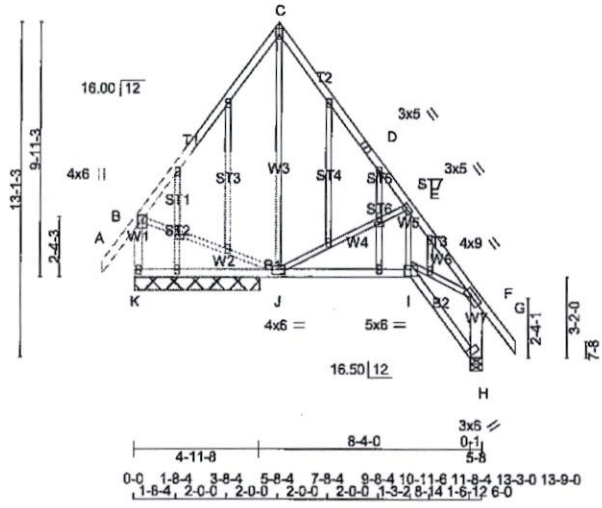

TOTAL WEIGHT = 93 lb

[M][F]

LUMBER

N. L. G. A. RULES

CHORDS	SIZE		LUMBER	DESCR.
A - C	2x4	DRY	1650F 1.5E	SPF
C - D	2x4	DRY	No.2	SPF
D - G	2x4	DRY	No.2	SPF
K - B	2x4	DRY	No.2	SPF
H - F	2x6	DRY	No.2	SPF
K - I	2x4	DRY	No.2	SPF
I - H	2x4	DRY	No.2	SPF
ALL WEBS EXCEPT	2x3	DRY	No.2	SPF
ALL GABLE WEBS	2x3	DRY	No.2	SPF

DRY: SEASONED LUMBER.

GABLE STUDS SPACED AT 2-0-0 OC.

PLATES (table is in inches)

JT	TYPE	PLATES	W	LEN	Y	X
B	TMVW+p	MT20	4.0	6.0	2.00	2.00
C	TTW+p	MT20	3.0	5.0	2.00	Edge
D	TS-t	MT20	3.0	5.0		
E	TMWW-t	MT20	3.0	5.0	1.50	1.50
F	TMVW-t	MT20	4.0	9.0	2.00	3.00
H	BVM1+H	MT20	3.0	6.0	Edge	
I	BBWW-t	MT20	5.0	6.0	3.00	3.00
J	BMWWW-t	MT20	4.0	6.0		
K	BMV1+p	MT20	2.0	4.0		
L, M, N, O, P, Q, R, S, T, U, V, W						
L	NP+w	MT20	2.0	4.0		
N	NP-p	MT20	2.0	4.0	1.00	1.75
U	NP-p	MT20	2.0	4.0	0.75	2.00

Edge - INDICATES REFERENCE CORNER OF PLATE TOUCHES EDGE OF CHORD.

NOTE: Lateral brace(s) shown shall be 2x4 SPF #2

LICENSED PROFESSIONAL ENGINEER
11/11/2019
R. TURENNE
100157040
PROVINCE OF ONTARIO

DIMENSIONS, SUPPORTS AND LOADINGS SPECIFIED BY FABRICATOR TO BE VERIFIED BY BUILDING DESIGNER

BEARINGS

JT	FACTORED GROSS REACTION VERT	HORZ	MAXIMUM FACTORED GROSS REACTION DOWN	HORZ	UPLIFT	INPUT BRG IN-SX	REQRD BRG IN-SX
K	830	0	830	0	0	4-11-8	1-1-5
H	830	0	830	0	0	5-8 (5-7)	5-7

VALUE IN PARENTHESIS INDICATES EFFECTIVE BEARING LENGTH

BEVELED PLATE OR SHIM REQUIRED TO PROVIDE FULL BEARING SURFACE WITH TRUSS CHORD AT JT(S): H

UNFACTORED REACTIONS

JT	1ST LCASE COMBINED	MAX./MIN. COMPONENT REACTIONS SNOW	LIVE	PERM.LIVE	WIND	DEAD	SOIL
K	587	386 / 0	0 / 0	0 / 0	0 / 0	201 / 0	0 / 0
H	587	386 / 0	0 / 0	0 / 0	0 / 0	201 / 0	0 / 0

BEARING MATERIAL TO BE SPF NO.2 OR BETTER AT JOINT(S) K, H

BRACING

TOP CHORD TO BE SHEATHED OR MAX. PURLIN SPACING = 5.71 FT.
MAX. UNBRACED BOTTOM CHORD LENGTH = 10.00 FT OR RIGID CEILING DIRECTLY APPLIED.

ALL PITCH BREAKS AND PERIMETER CORNER JOINTS MUST BE LATERALLY RESTRAINED.

LOADING

TOTAL LOAD CASES: (4)

CHORDS

MEMB. FR-TO	MAX. FACTORED FORCE (LBS)	FACTORED VERT. LOAD (PLF) FROM	TO	LC1 CSI (LC)	MAX	MAX. UNBRAC LENGTH
A- B	0 / 48	-84.9	-84.9	0.10 (1)		10.00
B- C	-425 / 0	-84.9	-84.9	0.30 (1)		6.25
C- D	-456 / 0	-84.9	-84.9	0.28 (1)		6.25
D- E	-456 / 0	-84.9	-84.9	0.28 (1)		6.25
E- F	-1132 / 0	-84.9	-84.9	0.23 (1)		5.71
F- G	0 / 48	-84.9	-84.9	0.12 (1)		10.00
K- B	-789 / 0	0.0	0.0	0.10 (1)		7.81
H- F	-804 / 0	0.0	0.0	0.08 (1)		7.81
K- J	0 / 0	-18.5	-18.5	0.16 (4)		10.00
J- I	0 / 697	-18.5	-18.5	0.22 (4)		10.00
I- H	0 / 0	-18.5	-18.5	0.04 (4)		10.00

WEBS

MEMB. FR-TO	MAX. FACTORED FORCE (LBS)	MAX CSI (LC)
J- C	0 / 259	0.06 (4)
J- E	-497 / 0	0.29 (1)
I- E	0 / 389	0.09 (1)
B- J	0 / 270	0.06 (1)
I- F	0 / 781	0.18 (1)

DESIGN CRITERIA

SPECIFIED LOADS:

TOP CH.	LL	=	23.3	PSF
	DL	=	6.0	PSF
BOT CH.	LL	=	0.0	PSF
	DL	=	7.4	PSF
TOTAL LOAD		=	36.7	PSF

SPACING = 24.0 IN. C/C

THIS TRUSS IS DESIGNED FOR RESIDENTIAL OR SMALL BUILDING REQUIREMENTS OF PART 9, NBCC 2010, NBCC 2015

THIS DESIGN COMPLIES WITH:
- PART 9 OF BCBC 2018 , OBC 2012 , ABC 2019
- CSA 086-09, CSA 086-14
- TPIC 2011, TPIC 2014

(55 % OF 27.2 P.S.F. G.S.L. PLUS 8.4 P.S.F. RAIN LOAD) EQUALS 23.3 P.S.F. SPECIFIED ROOF LIVE LOAD

ALLOWABLE DEFL.(LL)= L/360 (0.46")
CALCULATED VERT. DEFL.(LL) = L/ 999 (0.02")
ALLOWABLE DEFL.(TL)= L/360 (0.46")
CALCULATED VERT. DEFL.(TL) = L/ 999 (0.05")

CSI: TC=0.30/1.00 (B-C:1) , BC=0.22/1.00 (I-J:4) , WB=0.29/1.00 (E-J:1) , SSI=0.12/1.00 (C-E:1)

DOL LUMBER=1.00 NAIL=1.00 LS BEND=1.10 COMP=1.10 SHEAR=1.10 TENS= 1.10

COMPANION LIVE LOAD FACTOR = 1.00

AUTOSOLVE LEFT HEEL ONLY

TRUSS PLATE MANUFACTURER IS NOT RESPONSIBLE FOR QUALITY CONTROL IN THE TRUSS MANUFACTURING PLANT .

NAIL VALUES

PLATE	GRIP(DRY) (PSI) MAX	MIN	SHEAR (PLI) MAX	MIN	SECTION (PLI) MAX	MIN
MT20	618	354	1667	788	1987	1656

PLATE PLACEMENT TOL. = 0.250 Inches

PLATE ROTATION TOL. = 5.0 Deg.

JSI GRIP= 0.81 (D) (INPUT = 0.90)
JSI METAL= 0.31 (I) (INPUT = 1.00)

JOB NAME	TRUSS NAME	QUANTITY	PLY	JOB DESC.	DRWG NO.
313999	H12		1	TRUSS DESC. JT-39002	E-19112593

Alpa Roof Truss, Maple

Version 8.300 S Aug 9 2019 MiTek Industries, Inc. Mon Nov 11 15:04:56 2019 Page 1

ID:MF8iiriaTok7DlbpT4B71Xys4PG-WwrmcmWRvTVOHKBBYGv43P4f3Qy8y8OezFZ6J1yKEKL

Scale = 1:69.1

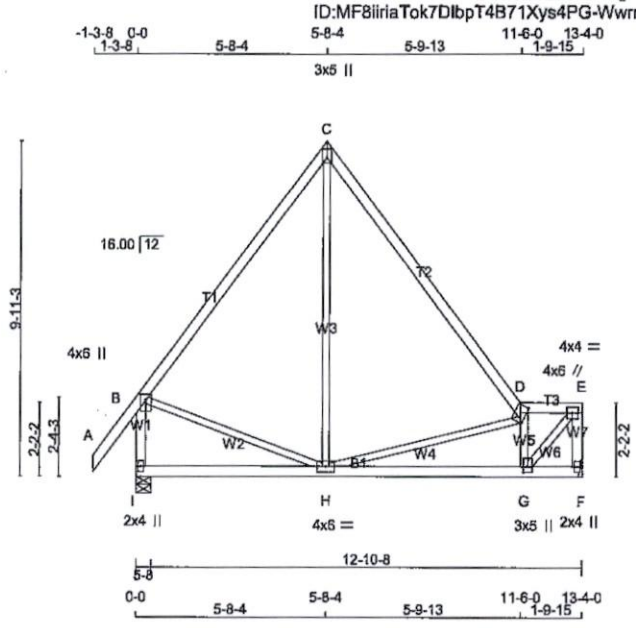

TOTAL WEIGHT = 3 X 66 = 199 lb

[M][F]

LUMBER

N. L. G. A. RULES

CHORDS	SIZE		LUMBER	DESCR.
A - C	2x4	DRY	1650F 1.5E	SPF
C - D	2x4	DRY	2100F 1.8E	SPF
D - E	2x4	DRY	No.2	SPF
F - E	2x4	DRY	No.2	SPF
I - B	2x4	DRY	No.2	SPF
I - F	2x4	DRY	No.2	SPF
ALL WEBS EXCEPT	2x3	DRY	No.2	SPF

DRY: SEASONED LUMBER.

PLATES (table is in inches)

JT	TYPE	PLATES	W	LEN	Y	X
B	TMVW+p	MT20	4.0	6.0	2.00	2.00
C	TTW+p	MT20	3.0	5.0	2.00	Edge
D	TTWW+m	MT20	4.0	6.0	2.75	2.00
E	TMVW-t	MT20	4.0	4.0		
F	BMV1+p	MT20	2.0	4.0		
G	BMWW+t	MT20	3.0	5.0	2.00	1.50
H	BMWWW-t	MT20	4.0	6.0		
I	BMV1+p	MT20	2.0	4.0		

Edge - INDICATES REFERENCE CORNER OF PLATE TOUCHES EDGE OF CHORD.

NOTE: Lateral brace(s) shown shall be 2x4 SPF #2

LICENSED PROFESSIONAL ENGINEER
11/11/2019
R. TURENNE
100157040
PROVINCE OF ONTARIO

DIMENSIONS, SUPPORTS AND LOADINGS SPECIFIED BY FABRICATOR TO BE VERIFIED BY BUILDING DESIGNER

BEARINGS

JT	FACTORED GROSS REACTION VERT	HORZ	MAXIMUM FACTORED GROSS REACTION DOWN	HORZ	UPLIFT	INPUT BRG IN-SX	REQRD BRG IN-SX
F	689	0	689	0	0	MECHANICAL	
I	809	0	809	0	0	5-8	1-8

A SUITABLE HANGER/MECHANICAL CONNECTION IS REQUIRED AT JOINT F. MINIMUM BEARING LENGTH AT JOINT F = 1-8.

UNFACTORED REACTIONS

JT	1ST LCASE COMBINED	MAX./MIN. COMPONENT REACTIONS SNOW	LIVE	PERM.LIVE	WIND	DEAD	SOIL
F	489	310 / 0	0 / 0	0 / 0	0 / 0	179 / 0	0 / 0
I	572	376 / 0	0 / 0	0 / 0	0 / 0	196 / 0	0 / 0

BEARING MATERIAL TO BE SPF NO.2 OR BETTER AT JOINT(S) I

BRACING

TOP CHORD TO BE SHEATHED OR MAX. PURLIN SPACING = 6.25 FT.
MAX. UNBRACED BOTTOM CHORD LENGTH = 10.00 FT OR RIGID CEILING DIRECTLY APPLIED.

ALL PITCH BREAKS AND PERIMETER CORNER JOINTS MUST BE LATERALLY RESTRAINED.

LOADING

TOTAL LOAD CASES: (4)

CHORDS

MEMB. FR-TO	MAX. FACTORED FORCE (LBS)	FACTORED VERT. LOAD LC1 (PLF) FROM	TO	MAX CSI (LC)	MAX. UNBRAC LENGTH
A- B	0 / 48	-84.9	-84.9	0.10 (1)	10.00
B- C	-405 / 0	-84.9	-84.9	0.30 (1)	6.25
C- D	-403 / 0	-84.9	-84.9	0.24 (1)	6.25
D- E	-568 / 0	-84.9	-84.9	0.04 (1)	6.25
F- E	-683 / 0	0.0	0.0	0.08 (1)	7.81
I- B	-768 / 0	0.0	0.0	0.10 (1)	7.81
I- H	0 / 0	-18.5	-18.5	0.16 (4)	10.00
H- G	0 / 599	-18.5	-18.5	0.22 (4)	10.00
G- F	0 / 0	-18.5	-18.5	0.07 (4)	10.00

WEBS

MEMB. FR-TO	MAX. FACTORED FORCE (LBS)	MAX CSI (LC)
H- C	0 / 157	0.05 (4)
H- D	-373 / 0	0.25 (1)
G- D	-549 / 0	0.08 (1)
G- E	0 / 841	0.19 (1)
B- H	0 / 257	0.06 (1)

DESIGN CRITERIA

SPECIFIED LOADS:

TOP CH.	LL	=	23.3	PSF
	DL	=	6.0	PSF
BOT CH.	LL	=	0.0	PSF
	DL	=	7.4	PSF
TOTAL LOAD		=	36.7	PSF

SPACING = 24.0 IN. C/C

LOADING IN ALL FLAT SECTIONS BASED ON A SLOPE OF 2.00/12 MINIMUM

THIS TRUSS IS DESIGNED FOR RESIDENTIAL OR SMALL BUILDING REQUIREMENTS OF PART 9, NBCC 2010, NBCC 2015

THIS DESIGN COMPLIES WITH:
- PART 9 OF BCBC 2018 , OBC 2012 , ABC 2019
- CSA 086-09, CSA 086-14
- TPIC 2011, TPIC 2014

(55 % OF 27.2 P.S.F. G.S.L. PLUS 8.4 P.S.F. RAIN LOAD) EQUALS 23.3 P.S.F. SPECIFIED ROOF LIVE LOAD

ALLOWABLE DEFL.(LL)= L/360 (0.44")
CALCULATED VERT. DEFL.(LL) = L/ 999 (0.01")
ALLOWABLE DEFL.(TL)= L/360 (0.44")
CALCULATED VERT. DEFL.(TL) = L/ 999 (0.04")

CSI: TC=0.30/1.00 (B-C:1) , BC=0.22/1.00 (G-H:4) , WB=0.25/1.00 (D-H:1) , SSI=0.12/1.00 (C-D:1)

DOL LUMBER=1.00 NAIL=1.00 LS BEND=1.10 COMP=1.10 SHEAR=1.10 TENS= 1.10

COMPANION LIVE LOAD FACTOR = 1.00

TRUSS PLATE MANUFACTURER IS NOT RESPONSIBLE FOR QUALITY CONTROL IN THE TRUSS MANUFACTURING PLANT .

NAIL VALUES

PLATE	GRIP(DRY) (PSI) MAX	MIN	SHEAR (PLI) MAX	MIN	SECTION (PLI) MAX	MIN
MT20	618	354	1667	788	1987	1656

PLATE PLACEMENT TOL. = 0.250 Inches

PLATE ROTATION TOL. = 5.0 Deg.

JSI GRIP= 0.87 (E) (INPUT = 0.90)
JSI METAL= 0.35 (G) (INPUT = 1.00)

JOB NAME	TRUSS NAME	QUANTITY	PLY	JOB DESC.		DRWG NO.
313999	H13TG		1	TRUSS DESC.	JT-39002	E-19112594

Alpa Roof Truss, Maple

Version 8.300 S Aug 9 2019 MiTek Industries, Inc. Mon Nov 11 15:04:58 2019 Page 1

ID:MF8iiriaTok7DlbpT4B71Xys4PG-SJzX1RYhR5l6WdLafgxY8q92lEg3Q5AxRZ2DNvyKEKJ

-1-3-8 0-0 2-5-8 2-9-10 4-5-8 6-1-6 6-5-8 8-11-0 10-2-8
1-3-8 2-5-8 4-2 1-7-14 1-7-14 4-2 2-5-8 1-3-8

Scale: 3/16"=1'

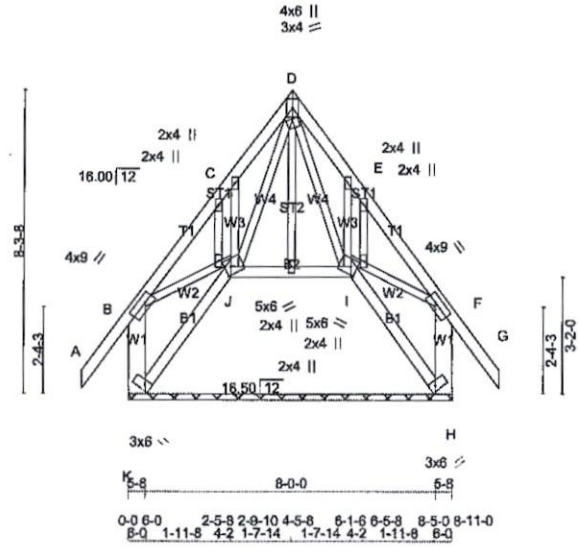

TOTAL WEIGHT = 67 lb

[M]

LUMBER

N. L. G. A. RULES

CHORDS	SIZE		LUMBER	DESCR.
A - D	2x4	DRY	No.2	SPF
D - G	2x4	DRY	No.2	SPF
K - B	2x6	DRY	No.2	SPF
H - F	2x6	DRY	No.2	SPF
K - J	2x4	DRY	No.2	SPF
J - I	2x4	DRY	No.2	SPF
I - H	2x4	DRY	No.2	SPF

ALL WEBS 2x3 DRY No.2 SPF
EXCEPT

ALL GABLE WEBS
2x3 DRY No.2 SPF
DRY: SEASONED LUMBER.

GABLE STUDS SPACED AT 2-0-0 OC.

PLATES (table is in inches)

JT	TYPE	PLATES	W	LEN	Y	X
B	TMVW-t	MT20	4.0	9.0	2.00	3.00
C	TMW+w	MT20	2.0	4.0		
D	TTWW+p	MT20	4.0	6.0		
D	NP+t	MT20	3.0	4.0	2.00	0.25
E	TMW+w	MT20	2.0	4.0		
F	TMVW-t	MT20	4.0	9.0	2.00	3.00
H	BVM1+l	MT20	3.0	6.0	Edge	
I	BBWWW1-m	MT20	5.0	6.0	2.50	2.00
I, J, L, M, N						
I	NP+w	MT20	2.0	4.0		
J	BBWWW1-m	MT20	5.0	6.0	2.50	2.00
K	BVM1+l	MT20	3.0	6.0	Edge	

Edge - INDICATES REFERENCE CORNER OF PLATE TOUCHES EDGE OF CHORD.

NOTE: Lateral brace(s) shown shall be 2x4 SPF #2

LICENSED PROFESSIONAL ENGINEER
11/11/2019
R. TURENNE
100157040
PROVINCE OF ONTARIO

DIMENSIONS, SUPPORTS AND LOADINGS SPECIFIED BY FABRICATOR TO BE VERIFIED BY BUILDING DESIGNER

BEARINGS

JT	FACTORED GROSS REACTION VERT	HORZ	MAXIMUM FACTORED GROSS REACTION DOWN	HORZ	UPLIFT	INPUT BRG IN-SX	REQRD BRG IN-SX
K	243	0	243	0	0	8-11-0 (5-7-6)	3-4
J	337	0	337	0	0	8-11-0 (5-7-6)	3-4
I	337	0	337	0	0	8-11-0 (5-7-6)	3-4
H	243	0	243	0	0	8-11-0 (5-7-6)	3-4

VALUE IN PARENTHESIS INDICATES EFFECTIVE BEARING LENGTH

UNFACTORED REACTIONS

JT	1ST LCASE COMBINED	MAX./MIN. COMPONENT REACTIONS SNOW	LIVE	PERM.LIVE	WIND	DEAD	SOIL
K	171	119 / 0	0 / 0	0 / 0	0 / 0	51 / 0	0 / 0
J	239	154 / 0	0 / 0	0 / 0	0 / 0	85 / 0	0 / 0
I	239	154 / 0	0 / 0	0 / 0	0 / 0	85 / 0	0 / 0
H	171	119 / 0	0 / 0	0 / 0	0 / 0	51 / 0	0 / 0

BEARING MATERIAL TO BE SPF NO.2 OR BETTER AT JOINT(S) K, J, I, H

BRACING

TOP CHORD TO BE SHEATHED OR MAX. PURLIN SPACING = 6.25 FT.
MAX. UNBRACED BOTTOM CHORD LENGTH = 10.00 FT OR RIGID CEILING DIRECTLY APPLIED.

ALL PITCH BREAKS AND PERIMETER CORNER JOINTS MUST BE LATERALLY RESTRAINED.

LOADING

TOTAL LOAD CASES: (4)

CHORDS

MEMB. FR-TO	MAX. FORCE (LBS)	FACTORED VERT. LOAD LC1 (PLF) FROM	TO	MAX CSI (LC)	MAX. UNBRAC LENGTH
A- B	0 / 48	-84.9	-84.9	0.12 (1)	10.00
B- C	0 / 15	-84.9	-84.9	0.09 (1)	10.00
C- D	-30 / 0	-84.9	-84.9	0.08 (1)	6.25
D- E	-30 / 0	-84.9	-84.9	0.08 (1)	6.25
E- F	0 / 15	-84.9	-84.9	0.09 (1)	10.00
F- G	0 / 48	-84.9	-84.9	0.12 (1)	10.00
K- B	-217 / 0	0.0	0.0	0.02 (1)	7.81
H- F	-217 / 0	0.0	0.0	0.02 (1)	7.81
K- J	0 / 0	-18.5	-18.5	0.04 (4)	10.00
J- I	0 / 12	-18.5	-18.5	0.06 (4)	10.00
I- H	0 / 0	-18.5	-18.5	0.04 (4)	10.00

WEBS

MEMB. FR-TO	MAX. FORCE (LBS)	MAX CSI (LC)
D- I	-36 / 0	0.01 (1)
I- E	-246 / 0	0.04 (1)
J- D	-36 / 0	0.01 (1)
J- C	-246 / 0	0.04 (1)
B- J	0 / 2	0.00 (1)
I- F	0 / 2	0.00 (1)

DESIGN CRITERIA

SPECIFIED LOADS:

TOP CH.	LL	=	23.3	PSF
	DL	=	6.0	PSF
BOT CH.	LL	=	0.0	PSF
	DL	=	7.4	PSF
TOTAL LOAD		=	36.7	PSF

SPACING = 24.0 IN. C/C

THIS TRUSS IS DESIGNED FOR RESIDENTIAL OR SMALL BUILDING REQUIREMENTS OF PART 9, NBCC 2010, NBCC 2015

THIS DESIGN COMPLIES WITH:
- PART 9 OF BCBC 2018 , OBC 2012 , ABC 2019
- CSA 086-09, CSA 086-14
- TPIC 2011, TPIC 2014

(55 % OF 27.2 P.S.F. G.S.L. PLUS 8.4 P.S.F. RAIN LOAD) EQUALS 23.3 P.S.F. SPECIFIED ROOF LIVE LOAD

CSI: TC=0.12/1.00 (A-B:1) , BC=0.06/1.00 (I-J:4) , WB=0.04/1.00 (E-I:1) , SSI=0.07/1.00 (E-F:1)

DOL LUMBER=1.00 NAIL=1.00 LS BEND=1.10 COMP=1.10 SHEAR=1.10 TENS= 1.10

COMPANION LIVE LOAD FACTOR = 1.00

AUTOSOLVE HEELS OFF

TRUSS PLATE MANUFACTURER IS NOT RESPONSIBLE FOR QUALITY CONTROL IN THE TRUSS MANUFACTURING PLANT .

NAIL VALUES

PLATE	GRIP(DRY) (PSI) MAX	MIN	SHEAR (PLI) MAX	MIN	SECTION (PLI) MAX	MIN
MT20	618	354	1667	788	1987	1656

PLATE PLACEMENT TOL. = 0.250 inches

PLATE ROTATION TOL. = 5.0 Deg.

JSI GRIP= 0.22 (E) (INPUT = 0.90)
JSI METAL= 0.12 (C) (INPUT = 1.00)

JOB NAME	TRUSS NAME	QUANTITY	PLY	JOB DESC.	DRWG NO.
313999	H14S		1	TRUSS DESC. JT-39002	E-19112595

Alpa Roof Truss, Maple

Version 8.300 S Aug 9 2019 MiTek Industries, Inc. Mon Nov 11 15:04:59 2019 Page 1
ID:MF8iirlaTok7DlbpT4B71Xys4PG-wVXvEnZJCOtz8nwmDOTng1iCOeyB9Ov4fDomwMyKEKI

Scale = 1:75.2

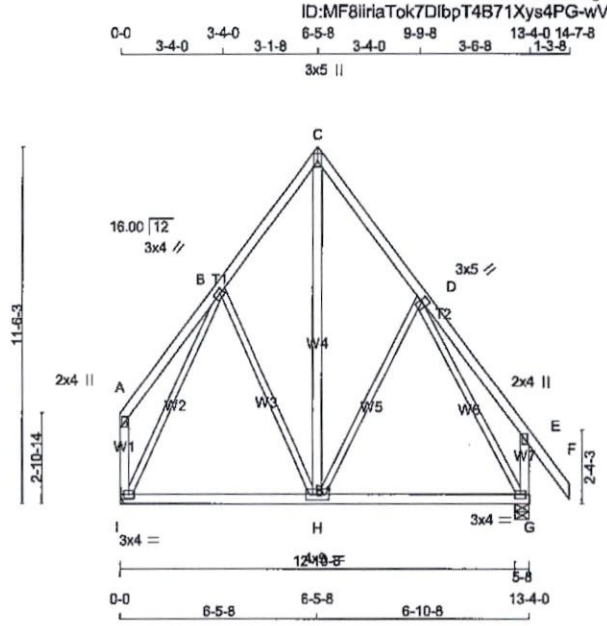

TOTAL WEIGHT = 3 X 84 = 253 lb

[M][F]

LUMBER

N. L. G. A. RULES

CHORDS	SIZE		LUMBER	DESCR.
A - C	2x4	DRY	No.2	SPF
C - F	2x4	DRY	No.2	SPF
I - A	2x4	DRY	No.2	SPF
G - E	2x4	DRY	No.2	SPF
I - G	2x4	DRY	No.2	SPF
ALL WEBS EXCEPT	2x3	DRY	No.2	SPF
H - C	2x4	DRY	No.2	SPF

DRY: SEASONED LUMBER.

PLATES (table is in inches)

JT	TYPE	PLATES	W	LEN	Y	X
A	TMV+p	MT20	2.0	4.0		
B	TMWW-t	MT20	3.0	4.0	1.50	1.50
C	TTW+p	MT20	3.0	6.0	2.00	Edge
D	TMWW+t	MT20	3.0	5.0	2.25	0.75
E	TMV+p	MT20	2.0	4.0		
G	BMVW1-t	MT20	3.0	4.0		
H	BMWWW-t	MT20	4.0	9.0		
I	BMVW1-t	MT20	3.0	4.0		

Edge - INDICATES REFERENCE CORNER OF PLATE TOUCHES EDGE OF CHORD.

NOTE: Lateral brace(s) shown shall be 2x4 SPF #2

LICENSED PROFESSIONAL ENGINEER
11/11/2019
R. TURENNE
100157040
PROVINCE OF ONTARIO

DIMENSIONS, SUPPORTS AND LOADINGS SPECIFIED BY FABRICATOR TO BE VERIFIED BY BUILDING DESIGNER

BEARINGS

JT	FACTORED GROSS REACTION VERT	HORZ	MAXIMUM FACTORED GROSS REACTION DOWN	HORZ	UPLIFT	INPUT BRG IN-SX	REQRD BRG IN-SX
I	689	0	689	0	0	MECHANICAL	
G	809	0	809	0	0	5-8	1-8

A SUITABLE HANGER/MECHANICAL CONNECTION IS REQUIRED AT JOINT I. MINIMUM BEARING LENGTH AT JOINT I = 1-8.

UNFACTORED REACTIONS

JT	1ST LCASE COMBINED	MAX./MIN. COMPONENT REACTIONS SNOW	LIVE	PERM.LIVE	WIND	DEAD	SOIL
I	489	310 / 0	0 / 0	0 / 0	0 / 0	179 / 0	0 / 0
G	572	376 / 0	0 / 0	0 / 0	0 / 0	196 / 0	0 / 0

BEARING MATERIAL TO BE SPF NO.2 OR BETTER AT JOINT(S) G

BRACING

TOP CHORD TO BE SHEATHED OR MAX. PURLIN SPACING = 6.25 FT.
MAX. UNBRACED BOTTOM CHORD LENGTH = 10.00 FT OR RIGID CEILING DIRECTLY APPLIED.

ALL PITCH BREAKS AND PERIMETER CORNER JOINTS MUST BE LATERALLY RESTRAINED.

LOADING

TOTAL LOAD CASES: (4)

CHORDS

MEMB. FR-TO	MAX. FACTORED FORCE (LBS)	FACTORED VERT. LOAD LC1 (PLF) FROM	TO	MAX CSI (LC)	MAX. UNBRAC LENGTH
A- B	0 / 25	-84.9	-84.9	0.14 (1)	10.00
B- C	-384 / 0	-84.9	-84.9	0.11 (1)	6.25
C- D	-385 / 0	-84.9	-84.9	0.13 (1)	6.25
D- E	0 / 28	-84.9	-84.9	0.16 (1)	10.00
E- F	0 / 48	-84.9	-84.9	0.12 (1)	10.00
I- A	-107 / 0	0.0	0.0	0.02 (1)	7.81
G- E	-228 / 0	0.0	0.0	0.03 (1)	7.81
I- H	0 / 255	-18.5	-18.5	0.26 (4)	10.00
H- G	0 / 278	-18.5	-18.5	0.26 (4)	10.00

WEBS

MEMB. FR-TO	MAX. FACTORED FORCE (LBS)	MAX CSI (LC)
B- H	-96 / 0	0.11 (1)
H- C	0 / 354	0.06 (1)
H- D	-131 / 0	0.14 (1)
I- B	-595 / 0	0.65 (1)
D- G	-600 / 0	0.62 (1)

DESIGN CRITERIA

SPECIFIED LOADS:

TOP CH.	LL	=	23.3	PSF
	DL	=	6.0	PSF
BOT CH.	LL	=	0.0	PSF
	DL	=	7.4	PSF
TOTAL LOAD		=	36.7	PSF

SPACING = 24.0 IN. C/C

THIS TRUSS IS DESIGNED FOR RESIDENTIAL OR SMALL BUILDING REQUIREMENTS OF PART 9, NBCC 2010, NBCC 2015

THIS DESIGN COMPLIES WITH:
- PART 9 OF BCBC 2018 , OBC 2012 , ABC 2019
- CSA 086-09, CSA 086-14
- TPIC 2011, TPIC 2014

(55 % OF 27.2 P.S.F. G.S.L. PLUS 8.4 P.S.F. RAIN LOAD) EQUALS 23.3 P.S.F. SPECIFIED ROOF LIVE LOAD

ALLOWABLE DEFL.(LL)= L/360 (0.44")
CALCULATED VERT. DEFL.(LL) = L/ 999 (0.01")
ALLOWABLE DEFL.(TL)= L/360 (0.44")
CALCULATED VERT. DEFL.(TL) = L/ 999 (0.06")

CSI: TC=0.16/1.00 (D-E:1) , BC=0.26/1.00 (G-H:4) , WB=0.65/1.00 (B-I:1) , SSI=0.11/1.00 (G-H:4)

DOL LUMBER=1.00 NAIL=1.00 LS BEND=1.10 COMP=1.10 SHEAR=1.10 TENS= 1.10

COMPANION LIVE LOAD FACTOR = 1.00

TRUSS PLATE MANUFACTURER IS NOT RESPONSIBLE FOR QUALITY CONTROL IN THE TRUSS MANUFACTURING PLANT .

NAIL VALUES

PLATE	GRIP(DRY) (PSI) MAX	MIN	SHEAR (PLI) MAX	MIN	SECTION (PLI) MAX	MIN
MT20	618	354	1667	788	1987	1656

PLATE PLACEMENT TOL. = 0.250 Inches

PLATE ROTATION TOL. = 5.0 Deg.

JSI GRIP= 0.79 (D) (INPUT = 0.90)
JSI METAL= 0.38 (D) (INPUT = 1.00)

JOB NAME	TRUSS NAME	QUANTITY	PLY	JOB DESC.	DRWG NO.
313999	H14T		1	TRUSS DESC. JT-39002	E-19112596

Alpa Roof Truss, Maple

Version 8.300 S Aug 9 2019 MiTek Industries, Inc. Mon Nov 11 15:05:01 2019 Page 1
ID:MF8iIriaTok7DlbpT4B71Xys4PG-Ph5HS7axzi?qlxVyn5_0DFEN72LfuyJDutXJSnyKEKH

Scale = 1:75.6

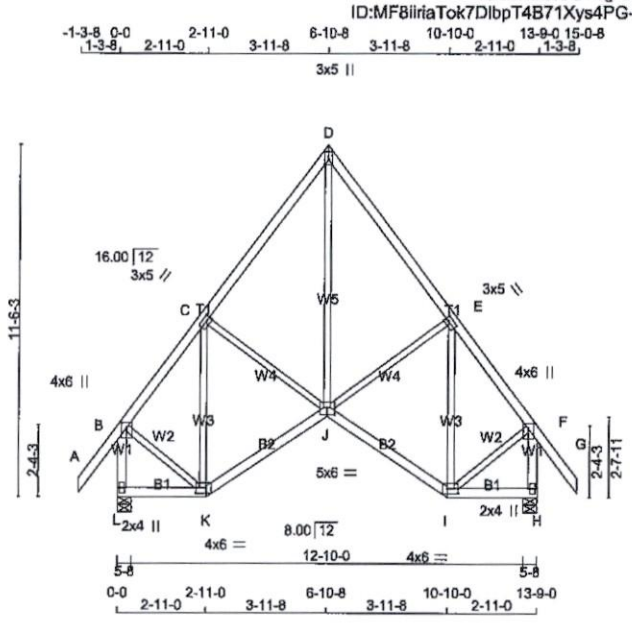

TOTAL WEIGHT = 2 X 83 = 165 lb

LUMBER

N. L. G. A. RULES

CHORDS	SIZE		LUMBER	DESCR.
A - D	2x4	DRY	No.2	SPF
D - G	2x4	DRY	No.2	SPF
L - B	2x4	DRY	No.2	SPF
H - F	2x4	DRY	No.2	SPF
L - K	2x4	DRY	No.2	SPF
K - J	2x4	DRY	No.2	SPF
J - I	2x4	DRY	No.2	SPF
I - H	2x4	DRY	No.2	SPF
ALL WEBS EXCEPT	2x3	DRY	No.2	SPF

DRY: SEASONED LUMBER.

PLATES (table is in inches)

JT	TYPE	PLATES	W	LEN	Y	X
B	TMWW+p	MT20	4.0	6.0	2.00	2.00
C	TMWW-t	MT20	3.0	5.0	1.50	1.50
D	TTW+p	MT20	3.0	5.0	2.00	Edge
E	TMWW-t	MT20	3.0	5.0	1.50	1.50
F	TMWW+p	MT20	4.0	6.0	2.00	2.00
H	BMV1+p	MT20	2.0	4.0		
I	BBWW-t	MT20	4.0	6.0	2.00	4.00
J	BBWWW-p	MT20	5.0	6.0	2.75	3.00
K	BBWW-t	MT20	4.0	6.0	2.00	4.00
L	BMV1+p	MT20	2.0	4.0		

Edge - INDICATES REFERENCE CORNER OF PLATE TOUCHES EDGE OF CHORD.

NOTE: Lateral brace(s) shown shall be 2x4 SPF #2

DIMENSIONS, SUPPORTS AND LOADINGS SPECIFIED BY FABRICATOR TO BE VERIFIED BY BUILDING DESIGNER

BEARINGS

JT	FACTORED GROSS REACTION VERT	HORZ	MAXIMUM FACTORED GROSS REACTION DOWN	HORZ	UPLIFT	INPUT BRG IN-SX	REQRD BRG IN-SX
L	830	0	830	0	0	5-8	1-8
H	830	0	830	0	0	5-8	1-8

UNFACTORED REACTIONS

JT	1ST LCASE COMBINED	MAX./MIN. COMPONENT REACTIONS SNOW	LIVE	PERM.LIVE	WIND	DEAD	SOIL
L	587	386 / 0	0 / 0	0 / 0	0 / 0	201 / 0	0 / 0
H	587	386 / 0	0 / 0	0 / 0	0 / 0	201 / 0	0 / 0

BEARING MATERIAL TO BE SPF NO.2 OR BETTER AT JOINT(S) L, H

BRACING

TOP CHORD TO BE SHEATHED OR MAX. PURLIN SPACING = 6.25 FT.
MAX. UNBRACED BOTTOM CHORD LENGTH = 10.00 FT OR RIGID CEILING DIRECTLY APPLIED.

ALL PITCH BREAKS AND PERIMETER CORNER JOINTS MUST BE LATERALLY RESTRAINED.

LOADING

TOTAL LOAD CASES: (4)

CHORDS

MEMB. FR-TO	MAX. FACTORED FORCE (LBS)	FACTORED VERT. LOAD LC1 FROM (PLF)	TO	MAX CSI (LC)	MAX. UNBRAC LENGTH
A- B	0 / 48	-84.9	-84.9	0.12 (1)	10.00
B- C	-472 / 0	-84.9	-84.9	0.14 (1)	6.25
C- D	-507 / 0	-84.9	-84.9	0.17 (1)	6.25
D- E	-507 / 0	-84.9	-84.9	0.17 (1)	6.25
E- F	-472 / 0	-84.9	-84.9	0.14 (1)	6.25
F- G	0 / 48	-84.9	-84.9	0.12 (1)	10.00
L- B	-803 / 0	0.0	0.0	0.10 (1)	7.81
H- F	-803 / 0	0.0	0.0	0.10 (1)	7.81
L- K	0 / 0	-18.5	-18.5	0.05 (4)	10.00
K- J	0 / 360	-18.5	-18.5	0.12 (4)	10.00
J- I	0 / 360	-18.5	-18.5	0.12 (4)	10.00
I- H	0 / 0	-18.5	-18.5	0.05 (4)	10.00

WEBS

MEMB. FR-TO	MAX. FACTORED FORCE (LBS)	MAX CSI (LC)
J- D	0 / 490	0.11 (1)
J- E	-13 / 0	0.01 (1)
I- E	-341 / 0	0.19 (1)
C- J	-13 / 0	0.01 (1)
K- C	-341 / 0	0.19 (1)
B- K	0 / 367	0.08 (1)
I- F	0 / 367	0.08 (1)

DESIGN CRITERIA

SPECIFIED LOADS:

TOP CH.	LL	=	23.3	PSF
	DL	=	6.0	PSF
BOT CH.	LL	=	0.0	PSF
	DL	=	7.4	PSF
TOTAL LOAD		=	36.7	PSF

SPACING = 24.0 IN. C/C

THIS TRUSS IS DESIGNED FOR RESIDENTIAL OR SMALL BUILDING REQUIREMENTS OF PART 9, NBCC 2010, NBCC 2015

THIS DESIGN COMPLIES WITH:
- PART 9 OF BCBC 2018 , OBC 2012 , ABC 2019
- CSA 086-09, CSA 086-14
- TPIC 2011, TPIC 2014

(55 % OF 27.2 P.S.F. G.S.L. PLUS 8.4 P.S.F. RAIN LOAD) EQUALS 23.3 P.S.F. SPECIFIED ROOF LIVE LOAD

ALLOWABLE DEFL.(LL)= L/360 (0.46")
CALCULATED VERT. DEFL.(LL) = L/ 999 (0.01")
ALLOWABLE DEFL.(TL)= L/360 (0.46")
CALCULATED VERT. DEFL.(TL) = L/ 999 (0.03")

CSI: TC=0.17/1.00 (D-E:1) , BC=0.12/1.00 (I-J:4) , WB=0.19/1.00 (E-I:1) , SSI=0.10/1.00 (D-E:1)

DOL LUMBER=1.00 NAIL=1.00 LS BEND=1.10 COMP=1.10 SHEAR=1.10 TENS= 1.10

COMPANION LIVE LOAD FACTOR = 1.00

TRUSS PLATE MANUFACTURER IS NOT RESPONSIBLE FOR QUALITY CONTROL IN THE TRUSS MANUFACTURING PLANT .

NAIL VALUES

PLATE	GRIP(DRY) (PSI) MAX	MIN	SHEAR (PLI) MAX	MIN	SECTION (PLI) MAX	MIN
MT20	618	354	1667	788	1987	1656

PLATE PLACEMENT TOL. = 0.250 inches

PLATE ROTATION TOL. = 5.0 Deg.

JSI GRIP= 0.75 (D) (INPUT = 0.90)
JSI METAL= 0.21 (F) (INPUT = 1.00)

JOB NAME	TRUSS NAME	QUANTITY	PLY	JOB DESC.	DRWG NO.
313999	H14TG		1	TRUSS DESC. JT-39002	E-19112597

Alpa Roof Truss, Maple

Version 8.300 S Aug 9 2019 MiTek Industries, Inc. Mon Nov 11 15:05:02 2019 Page 1
ID:MF8iiriaTok7DlbpT4B71Xys4PG-L4C1tpbCVJFY?FfLuW0UtgKjHr1YMtjWMB0QWhyKEKF

-1-3-8 0-0 10-8 2-11-0 4-10-8 6-10-8 8-10-8 10-10-0 12-10-8 13-9-0 15-0-8
1-3-8 10-8 2-0-8 1-11-8 2-0-0 2-0-0 1-11-8 2-0-8 10-8 1-3-8

3x5 ||

Scale = 1:78.9

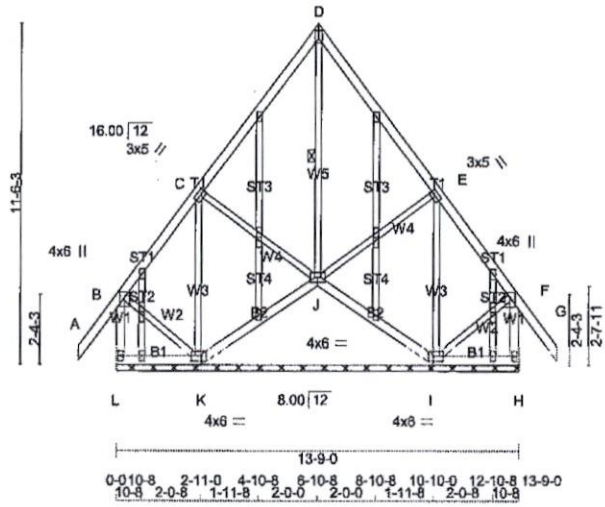

TOTAL WEIGHT = 98 lb

LUMBER

N. L. G. A. RULES

CHORDS	SIZE		LUMBER	DESCR.
A - D	2x4	DRY	No.2	SPF
D - G	2x4	DRY	No.2	SPF
L - B	2x4	DRY	No.2	SPF
H - F	2x4	DRY	No.2	SPF
L - K	2x4	DRY	No.2	SPF
K - J	2x4	DRY	No.2	SPF
J - I	2x4	DRY	No.2	SPF
I - H	2x4	DRY	No.2	SPF
ALL WEBS	2x3	DRY	No.2	SPF

EXCEPT

ALL GABLE WEBS
2x3 DRY No.2 SPF

DRY: SEASONED LUMBER.

GABLE STUDS SPACED AT 2-0-0 OC.

PLATES (table is in inches)

JT	TYPE	PLATES	W	LEN	Y	X
B	TMVW+p	MT20	4.0	6.0	2.00	2.00
C	TMWW-t	MT20	3.0	5.0	1.50	1.50
D	TTW+p	MT20	3.0	5.0	2.00	Edge
E	TMWW-t	MT20	3.0	5.0	1.50	1.50
F	TMVW+p	MT20	4.0	6.0	2.00	2.00
H	BMV1+p	MT20	2.0	4.0		
I	BBWW1-l	MT20	4.0	6.0	2.00	4.00
J	BBWWW1-p	MT20	4.0	6.0		
K	BBWW1-l	MT20	4.0	6.0	2.00	4.00
L	BMV1+p	MT20	2.0	4.0		
M	NP+w	MT20	2.0	4.0	1.00	1.00
M, N, O, P, Q, R, S, T, U, V, W, X						
M	NP+w	MT20	2.0	4.0		
P	NP+w	MT20	2.0	4.0	1.25	1.00
U	NP+w	MT20	2.0	4.0	1.00	1.00
X	NP+w	MT20	2.0	4.0	1.25	1.00

Edge - INDICATES REFERENCE CORNER OF PLATE TOUCHES EDGE OF CHORD.

NOTE: Lateral brace(s) shown shall be 2x4 SPF #2

LICENSED PROFESSIONAL ENGINEER
11/11/2019
R. TURENNE
100157040
PROVINCE OF ONTARIO

DIMENSIONS, SUPPORTS AND LOADINGS SPECIFIED BY FABRICATOR TO BE VERIFIED BY BUILDING DESIGNER

BEARINGS

JT	FACTORED GROSS REACTION VERT	HORZ	MAXIMUM FACTORED GROSS REACTION DOWN	HORZ	UPLIFT	INPUT BRG IN-SX	REQRD BRG IN-SX
L	379	0	379	0	0	13-9-0 (6-10-8)	5-4
K	195	0	195	0	0	13-9-0 (6-10-8)	5-4
J	512	0	512	0	0	13-9-0 (6-10-8)	5-4
I	195	0	195	0	0	13-9-0 (6-10-8)	5-4
H	379	0	379	0	0	13-9-0 (6-10-8)	5-4

VALUE IN PARENTHESIS INDICATES EFFECTIVE BEARING LENGTH

BEVELED PLATE OR SHIM REQUIRED TO PROVIDE FULL BEARING SURFACE WITH TRUSS CHORD AT JT(S): J

UNFACTORED REACTIONS

JT	1ST LCASE COMBINED	MAX./MIN. COMPONENT REACTIONS SNOW	LIVE	PERM.LIVE	WIND	DEAD	SOIL
L	265	193 / 0	0 / 0	0 / 0	0 / 0	71 / 0	0 / 0
K	141	72 / 0	0 / 0	0 / 0	0 / 0	69 / 0	0 / 0
J	361	241 / 0	0 / 0	0 / 0	0 / 0	121 / 0	0 / 0
I	141	72 / 0	0 / 0	0 / 0	0 / 0	69 / 0	0 / 0
H	265	193 / 0	0 / 0	0 / 0	0 / 0	71 / 0	0 / 0

BEARING MATERIAL TO BE SPF NO.2 OR BETTER AT JOINT(S) L, K, J, I, H

BRACING

TOP CHORD TO BE SHEATHED OR MAX. PURLIN SPACING = 6.25 FT.
MAX. UNBRACED BOTTOM CHORD LENGTH = 10.00 FT OR RIGID CEILING DIRECTLY APPLIED.

ALL PITCH BREAKS AND PERIMETER CORNER JOINTS MUST BE LATERALLY RESTRAINED.

1 LATERAL BRACE(S) AT 1/ 2 LENGTH OF D-J.

END VERTICAL(S) MUST BE SHEATHED OR HAVE BRACES AS INDICATED IN THE MAX. UNBRACED LENGTH COLUMN OF THE TABLE BELOW

LOADING

TOTAL LOAD CASES: (4)

CHORDS

MEMB. FR-TO	MAX. FACTORED FORCE (LBS)	FACTORED VERT. LOAD (PLF) FROM	TO	LC1	MAX CSI (LC)	MAX. UNBRAC LENGTH
A- B	0 / 48	-84.9	-84.9	0.12 (1)	10.00	
B- C	-96 / 0	-84.9	-84.9	0.19 (1)	6.25	
C- D	-50 / 0	-84.9	-84.9	0.19 (1)	6.25	
D- E	-50 / 0	-84.9	-84.9	0.19 (1)	6.25	
E- F	-96 / 0	-84.9	-84.9	0.19 (1)	6.25	
F- G	0 / 48	-84.9	-84.9	0.12 (1)	10.00	
L- B	-352 / 0	0.0	0.0	0.04 (1)	7.81	
H- F	-352 / 0	0.0	0.0	0.04 (1)	7.81	
L- K	0 / 0	-18.5	-18.5	0.05 (4)	10.00	
K- J	0 / 93	-18.5	-18.5	0.09 (4)	10.00	
J- I	0 / 93	-18.5	-18.5	0.09 (4)	10.00	
I- H	0 / 0	-18.5	-18.5	0.05 (4)	10.00	

WEBS

MEMB. FR-TO	MAX. FACTORED FORCE (LBS)	MAX CSI (LC)
J- D	-241 / 0	0.12 (1)
J- E	-79 / 0	0.03 (1)
I- E	-237 / 0	0.14 (1)
C- J	-79 / 0	0.03 (1)
K- C	-237 / 0	0.14 (1)
B- K	0 / 98	0.02 (1)
I- F	0 / 98	0.02 (1)

DESIGN CRITERIA

SPECIFIED LOADS:

TOP CH.	LL	=	23.3	PSF
	DL	=	6.0	PSF
BOT CH.	LL	=	0.0	PSF
	DL	=	7.4	PSF
TOTAL LOAD		=	36.7	PSF

SPACING = 24.0 IN. C/C

THIS TRUSS IS DESIGNED FOR RESIDENTIAL OR SMALL BUILDING REQUIREMENTS OF PART 9, NBCC 2010, NBCC 2015

THIS DESIGN COMPLIES WITH:
- PART 9 OF BCBC 2018 , OBC 2012 , ABC 2019
- CSA 086-09, CSA 086-14
- TPIC 2011, TPIC 2014

(55 % OF 27.2 P.S.F. G.S.L. PLUS 8.4 P.S.F. RAIN LOAD) EQUALS 23.3 P.S.F. SPECIFIED ROOF LIVE LOAD

CSI: TC=0.19/1.00 (B-C:1) , BC=0.09/1.00 (I-J:4) , WB=0.14/1.00 (E-I:1) , SSI=0.10/1.00 (D-E:1)

DOL LUMBER=1.00 NAIL=1.00 LS BEND=1.10 COMP=1.10 SHEAR=1.10 TENS= 1.10

COMPANION LIVE LOAD FACTOR = 1.00

TRUSS PLATE MANUFACTURER IS NOT RESPONSIBLE FOR QUALITY CONTROL IN THE TRUSS MANUFACTURING PLANT .

NAIL VALUES

PLATE	GRIP(DRY) (PSI) MAX	MIN	SHEAR (PLI) MAX	MIN	SECTION (PLI) MAX	MIN
MT20	618	354	1667	788	1987	1656

PLATE PLACEMENT TOL. = 0.250 inches

PLATE ROTATION TOL. = 5.0 Deg.

JSI GRIP= 0.37 (J) (INPUT = 0.90)
JSI METAL= 0.17 (J) (INPUT = 1.00)

JOB NAME	TRUSS NAME	QUANTITY	PLY	JOB DESC.	DRWG NO.
313999	H15G		1	TRUSS DESC. JT-39002	E-19112598

Alpa Roof Truss, Maple

Version 8.300 S Aug 9 2019 MiTek Industries, Inc. Mon Nov 11 15:05:05 2019 Page 1
ID:MF8iiriaTok7DlbpT4B71Xys4PG-IfuAVrd4oEd7siNwafaBwlyFg339ZD9y29F47?yKEKC

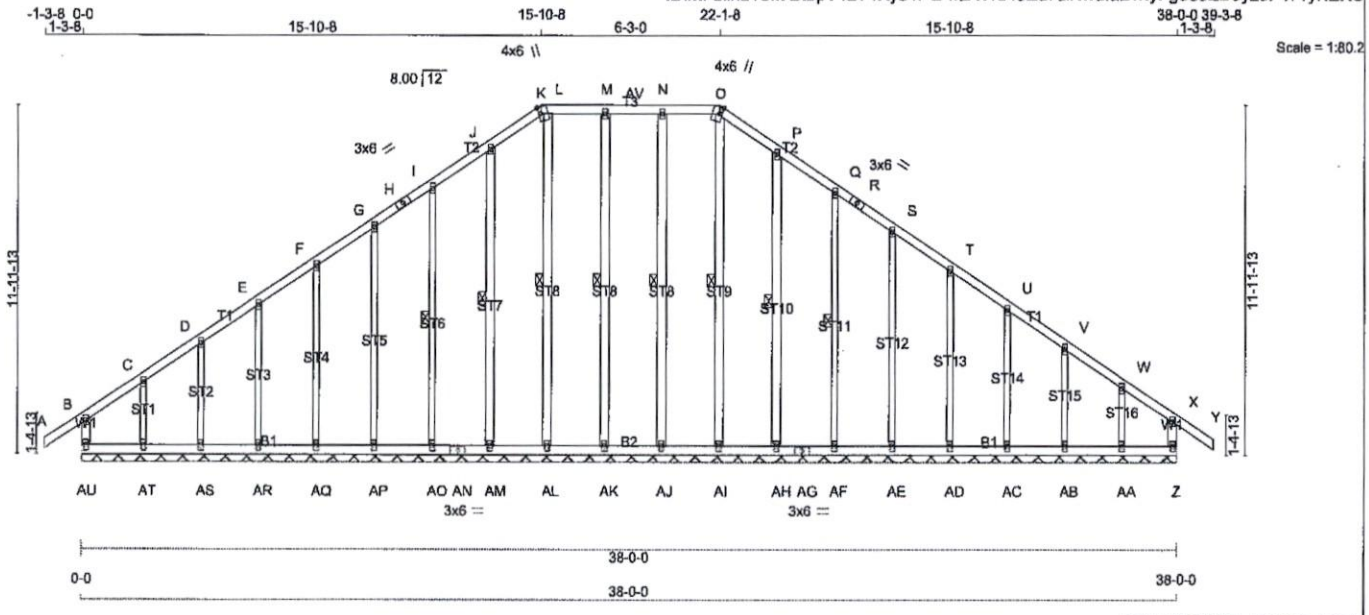

TOTAL WEIGHT = 2 X 229 = 458 lb

[M]

LUMBER

N. L. G. A. RULES

CHORDS	SIZE		LUMBER	DESCR.
AU- B	2x4	DRY	No.2	SPF
A - H	2x4	DRY	No.2	SPF
H - K	2x4	DRY	No.2	SPF
K - O	2x4	DRY	No.2	SPF
O - R	2x4	DRY	No.2	SPF
R - Y	2x4	DRY	No.2	SPF
Z - X	2x4	DRY	No.2	SPF
AU- AN	2x4	DRY	No.2	SPF
AN- AG	2x4	DRY	No.2	SPF
AG- Z	2x4	DRY	No.2	SPF
ALL WEBS	2x3	DRY	No.2	SPF
EXCEPT				
AI - O	2x4	DRY	No.2	SPF
AJ - N	2x4	DRY	No.2	SPF
AK- M	2x4	DRY	No.2	SPF
AL- L	2x4	DRY	No.2	SPF
AM- J	2x4	DRY	No.2	SPF
AH- P	2x4	DRY	No.2	SPF
ALL GABLE WEBS	2x3	DRY	No.2	SPF
EXCEPT				
ST1	2x4	DRY	No.2	SPF
ST2	2x4	DRY	No.2	SPF
ST3	2x4	DRY	No.2	SPF
ST4	2x4	DRY	No.2	SPF
ST5	2x4	DRY	No.2	SPF
ST12	2x4	DRY	No.2	SPF

DRY: SEASONED LUMBER.

GABLE STUDS SPACED AT 2-0-0 OC.

PLATES (table is in inches)

JT	TYPE	PLATES	W	LEN	Y	X
B	TMV+p	MT20	2.0	4.0		
C, D, E, F, G, I, J, M, N, P, Q, S, T, U, V, W						
C	TMW+w	MT20	2.0	4.0		
H	TS-t	MT20	3.0	6.0		
K						
K	TTW+m	MT20	4.0	6.0	Edge 1.00	

NOTE: Lateral brace(s) shown shall be 2x4 SPF #2

LICENSED PROFESSIONAL ENGINEER
11/11/2019
R. TURENNE
100157040
PROVINCE OF ONTARIO

DIMENSIONS, SUPPORTS AND LOADINGS SPECIFIED BY FABRICATOR TO BE VERIFIED BY BUILDING DESIGNER

BEARINGS

THIS TRUSS DESIGNED FOR CONTINUOUS BEARINGS.

THIS TRUSS REQUIRES RIGID SHEATHING ON EXPOSED FACE.

BEARING MATERIAL TO BE SPF NO.2 OR BETTER AT JOINT(S)

BRACING

FOR SECTION K-O, MAX. PURLIN SPACING = 2.00 FT.
FOR OTHER SECTIONS, TOP CHORD TO BE SHEATHED OR MAX. PURLIN SPACING = 6.25 FT.
MAX. UNBRACED BOTTOM CHORD LENGTH = 10.00 FT OR RIGID CEILING DIRECTLY APPLIED.

ALL PITCH BREAKS AND PERIMETER CORNER JOINTS MUST BE LATERALLY RESTRAINED.

1 LATERAL BRACE(S) AT 1/ 2 LENGTH OF O-AI, N-AJ, M-AK, L-AL, J-AM, I-AO, P-AH, Q-AF.

END VERTICAL(S) MUST BE SHEATHED OR HAVE BRACES AS INDICATED IN THE MAX. UNBRACED LENGTH COLUMN OF THE TABLE BELOW

LOADING

TOTAL LOAD CASES: (4)

CHORDS

MEMB. FR-TO	MAX. FACTORED FORCE (LBS)	FACTORED VERT. LOAD LC1 (PLF) FROM	TO	MAX CSI (LC)	MAX. UNBRAC LENGTH
AU- B	-210 / 0	0.0	0.0	0.01 (4)	7.81
A- B	0 / 32	-84.9	-84.9	0.11 (1)	10.00
B- C	-11 / 0	-84.9	-84.9	0.04 (1)	6.25
C- D	-4 / 0	-84.9	-84.9	0.04 (1)	10.00
D- E	-3 / 0	-84.9	-84.9	0.04 (1)	10.00
E- F	-2 / 4	-84.9	-84.9	0.04 (1)	10.00
F- G	-2 / 6	-84.9	-84.9	0.04 (1)	10.00
G- H	-1 / 8	-84.9	-84.9	0.04 (1)	10.00
H- I	-1 / 8	-84.9	-84.9	0.04 (1)	10.00
I- J	0 / 12	-84.9	-84.9	0.05 (1)	10.00
J- K	-2 / 5	-84.9	-84.9	0.04 (1)	10.00
K- L	0 / 15	-92.4	-92.4	0.04 (1)	2.00
L- M	0 / 10	-92.4	-92.4	0.04 (1)	2.00
M-AV	0 / 10	-92.4	-92.4	0.04 (1)	2.00
AV- N	0 / 10	-92.4	-92.4	0.04 (1)	2.00
N- O	0 / 10	-92.4	-92.4	0.04 (1)	2.00
O- P	0 / 11	-84.9	-84.9	0.04 (1)	10.00
P- Q	0 / 12	-84.9	-84.9	0.04 (1)	10.00
Q- R	-1 / 8	-84.9	-84.9	0.04 (1)	10.00
R- S	-1 / 8	-84.9	-84.9	0.04 (1)	10.00
S- T	-2 / 6	-84.9	-84.9	0.04 (1)	10.00
T- U	-2 / 4	-84.9	-84.9	0.04 (1)	10.00
U- V	-3 / 0	-84.9	-84.9	0.04 (1)	10.00
V- W	-3 / 0	-84.9	-84.9	0.04 (1)	10.00
W- X	-26 / 0	-84.9	-84.9	0.09 (1)	6.25
X- Y	0 / 32	-84.9	-84.9	0.11 (1)	10.00
Z- X	-227 / 0	0.0	0.0	0.03 (1)	7.81
AU-AT	0 / 9	-18.5	-18.5	0.02 (4)	10.00
AT-AS	0 / 3	-18.5	-18.5	0.02 (4)	10.00
AS-AR	0 / 2	-18.5	-18.5	0.02 (4)	10.00
AR-AQ	-3 / 2	-18.5	-18.5	0.02 (4)	10.00
AQ-AP	-5 / 1	-18.5	-18.5	0.01 (4)	10.00
AP-AO	-7 / 1	-18.5	-18.5	0.01 (4)	10.00
AO-AN	-8 / 0	-18.5	-18.5	0.01 (4)	10.00
AN-AM	-8 / 0	-18.5	-18.5	0.01 (4)	10.00
AM-AL	-10 / 0	-18.5	-18.5	0.01 (4)	10.00
AL-AK	-10 / 0	-18.5	-18.5	0.01 (4)	10.00
AK-AJ	-10 / 0	-18.5	-18.5	0.01 (4)	10.00
AJ-AI	-10 / 0	-18.5	-18.5	0.01 (4)	10.00
AI-AH	-10 / 0	-18.5	-18.5	0.01 (4)	10.00

WEBS

MEMB. FR-TO	MAX. FACTORED FORCE (LBS)	MAX CSI (LC)
AI- O	-186 / 0	0.15 (1)
AJ- N	-186 / 0	0.15 (1)
AK- M	-186 / 0	0.14 (1)
AL- L	-188 / 0	0.15 (1)
AM- J	-176 / 0	0.11 (1)
AO- I	-165 / 0	0.10 (1)
AP- G	-170 / 0	0.22 (1)
AQ- F	-168 / 0	0.13 (1)
AR- E	-168 / 0	0.08 (1)
AS- D	-167 / 0	0.04 (1)
AT- C	-167 / 0	0.03 (1)
AH- P	-176 / 0	0.10 (1)
AF- Q	-165 / 0	0.09 (1)
AE- S	-170 / 0	0.21 (1)
AD- T	-168 / 0	0.12 (1)
AC- U	-166 / 0	0.07 (1)
AB- V	-177 / 0	0.04 (1)
AA- W	-121 / 0	0.02 (1)

DESIGN CRITERIA

SPECIFIED LOADS:

TOP CH.	LL	=	23.3	PSF
	DL	=	6.0	PSF
BOT CH.	LL	=	0.0	PSF
	DL	=	7.4	PSF
TOTAL LOAD		=	36.7	PSF

SPACING = 24.0 IN. C/C

LOADING IN FLAT SECTION BASED ON PIGGYBACK TRUSS WITH SLOPES OF 6.00/12 AND -6.00/12 AND RESPECTIVE WALL HEIGHTS OF 0-0 AND 0-0 AND AN ADDITIONAL DEAD LOAD OF 3.0 P.S.F.

THIS TRUSS IS DESIGNED FOR RESIDENTIAL OR SMALL BUILDING REQUIREMENTS OF PART 9, NBCC 2010, NBCC 2015

THIS DESIGN COMPLIES WITH:
- PART 9 OF BCBC 2018 , OBC 2012 , ABC 2019
- CSA 086-09, CSA 086-14
- TPIC 2011, TPIC 2014

DESIGN ASSUMPTIONS
-OVERHANG NOT TO BE ALTERED OR CUT OFF.

(65 % OF 27.2 P.S.F. G.S.L. PLUS 8.4 P.S.F. RAIN LOAD) EQUALS 23.3 P.S.F. SPECIFIED ROOF LIVE LOAD

CSI: TC=0.11/1.00 (A-B:1) , BC=0.03/1.00 (Z-AA:1) , WB=0.22/1.00 (G-AP:1) , SSI=0.08/1.00 (A-B:1)

DOL LUMBER=1.00 NAIL=1.00 LS BEND=1.10 COMP=1.10 SHEAR=1.10 TENS= 1.10

COMPANION LIVE LOAD FACTOR = 1.00

TRUSS PLATE MANUFACTURER IS NOT RESPONSIBLE FOR QUALITY CONTROL IN THE TRUSS MANUFACTURING PLANT .

NAIL VALUES

PLATE	GRIP(DRY) (PSI) MAX	MIN	SHEAR (PLI) MAX	MIN	SECTION (PLI) MAX	MIN
MT20	618	354	1667	788	1987	1656

PLATE PLACEMENT TOL. = 0.250 inches

PLATE ROTATION TOL. = 5.0 Deg.

JSI GRIP= 0.56 (K) (INPUT = 0.90)
JSI METAL= 0.12 (X) (INPUT = 1.00)

CONTINUED ON PAGE 2

JOB NAME	TRUSS NAME	QUANTITY	PLY	JOB DESC.	DRWG NO.
313999	H16P		1	TRUSS DESC. JT-39002	E-19112599

Alpa Roof Truss, Maple

Version 8.300 S Aug 9 2019 MiTek Industries, Inc. Mon Nov 11 15:05:06 2019 Page 1
ID:MF8iiriaTok7DlbpT4B71Xys4PG-DrSYiAeiZYlzUsy67M5QTWUROSPJljb6Gp_efSyKEKB

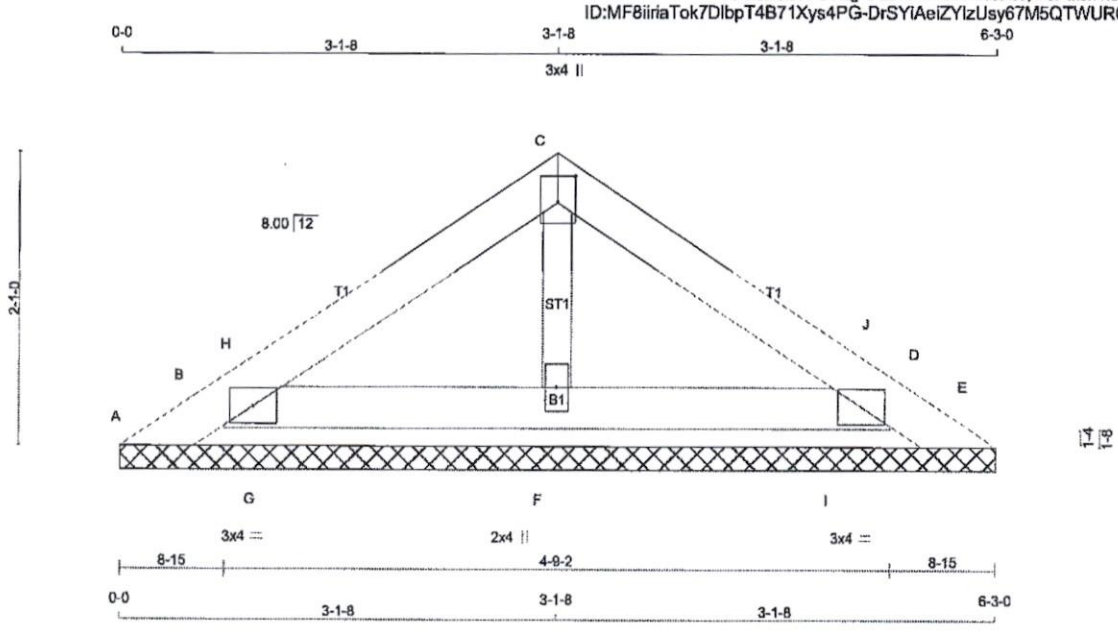

TOTAL WEIGHT = 2 X 15 = 30 lb

LUMBER
N. L. G. A. RULES

CHORDS	SIZE		LUMBER	DESCR.
A - C	2x4	DRY	No.2	SPF
C - E	2x4	DRY	No.2	SPF
B - D	2x4	DRY	No.2	SPF
ALL WEBS	2x3	DRY	No.2	SPF
ALL GABLE WEBS	2x3	DRY	No.2	SPF

DRY: SEASONED LUMBER.

GABLE STUDS SPACED AT 2-0-0 OC.

PLATES (table is in inches)

JT	TYPE	PLATES	W	LEN	Y	X
B	TMB1-I	MT20	3.0	4.0		
C	TTW+p	MT20	3.0	4.0	2.25	1.50
D	TMB1-I	MT20	3.0	4.0		
F	BMW1+w	MT20	2.0	4.0		

NOTE: Lateral brace(s) shown shall be 2x4 SPF #2

DIMENSIONS, SUPPORTS AND LOADINGS SPECIFIED BY FABRICATOR TO BE VERIFIED BY BUILDING DESIGNER

BEARINGS

THIS TRUSS DESIGNED FOR CONTINUOUS BEARINGS.

THIS TRUSS REQUIRES RIGID SHEATHING ON EXPOSED FACE.

BEVELED PLATE OR SHIM REQUIRED TO PROVIDE FULL BEARING SURFACE WITH TRUSS CHORD AT JT(S): F

PROVIDE ANCHORAGE AT BEARING JOINT A FOR 150 LBS FACTORED UPLIFT
PROVIDE ANCHORAGE AT BEARING JOINT E FOR 150 LBS FACTORED UPLIFT
BEARING MATERIAL TO BE SPF NO.2 OR BETTER AT JOINT(S)

BRACING

TOP CHORD TO BE SHEATHED OR MAX. PURLIN SPACING = 6.25 FT.
MAX. UNBRACED BOTTOM CHORD LENGTH = 10.00 FT OR RIGID CEILING DIRECTLY APPLIED.

ALL PITCH BREAKS AND PERIMETER CORNER JOINTS MUST BE LATERALLY RESTRAINED.

LOADING

TOTAL LOAD CASES: (4)

CHORDS

MEMB. FR-TO	MAX. FACTORED FORCE (LBS)	FACTORED VERT. LOAD LC1 (PLF) FROM	TO	MAX CSI (LC)	MAX. UNBRAC LENGTH
A- B	0 / 27	-103.4	-103.4	0.05 (1)	10.00
B- H	-71 / 0	-84.9	-84.9	0.05 (1)	6.25
H- C	-48 / 0	-84.9	-84.9	0.05 (1)	6.25
C- J	-48 / 0	-84.9	-84.9	0.05 (1)	6.25
J- D	-71 / 0	-84.9	-84.9	0.05 (1)	6.25
D- E	0 / 27	-103.4	-103.4	0.05 (1)	10.00
B- G	0 / 35	-18.5	-18.5	0.03 (1)	10.00
G- F	0 / 35	-18.5	-18.5	0.04 (1)	10.00
F- I	0 / 35	-18.5	-18.5	0.04 (1)	10.00
I- D	0 / 35	-18.5	-18.5	0.03 (1)	10.00

WEBS

MEMB. FR-TO	MAX. FACTORED FORCE (LBS)	MAX CSI (LC)
F- C	-108 / 0	0.02 (1)
G- H	-66 / 10	0.00 (1)
I- J	-66 / 10	0.00 (1)

DESIGN CRITERIA

SPECIFIED LOADS:

TOP CH.	LL =	23.3	PSF
	DL =	6.0	PSF
BOT CH.	LL =	0.0	PSF
	DL =	7.4	PSF
TOTAL LOAD	=	36.7	PSF

SPACING = 24.0 IN. C/C

THIS TRUSS IS DESIGNED FOR RESIDENTIAL OR SMALL BUILDING REQUIREMENTS OF PART 9, NBCC 2010, NBCC 2015

THIS DESIGN COMPLIES WITH:
- PART 9 OF BCBC 2018 , OBC 2012 , ABC 2019
- CSA 086-09, CSA 086-14
- TPIC 2011, TPIC 2014

(55 % OF 27.2 P.S.F. G.S.L. PLUS 8.4 P.S.F. RAIN LOAD) EQUALS 23.3 P.S.F. SPECIFIED ROOF LIVE LOAD

CSI: TC=0.05/1.00 (A-B:1) , BC=0.04/1.00 (F-I:1) , WB=0.02/1.00 (C-F:1) , SSI=0.06/1.00 (C-H:1)

DOL LUMBER=1.00 NAIL=1.00 LS BEND=1.10 COMP=1.10 SHEAR=1.10 TENS= 1.10

COMPANION LIVE LOAD FACTOR = 1.00

TRUSS PLATE MANUFACTURER IS NOT RESPONSIBLE FOR QUALITY CONTROL IN THE TRUSS MANUFACTURING PLANT .

NAIL VALUES

PLATE	GRIP(DRY) (PSI) MAX	MIN	SHEAR (PLI) MAX	MIN	SECTION (PLI) MAX	MIN
MT20	618	354	1667	788	1987	1656

PLATE PLACEMENT TOL. = 0.250 inches

PLATE ROTATION TOL. = 5.0 Deg.

JSI GRIP= 0.19 (D) (INPUT = 0.90)
JSI METAL= 0.04 (D) (INPUT = 1.00)

JOB NAME	TRUSS NAME	QUANTITY	PLY	JOB DESC.		DRWG NO.
310385	J1		1	TRUSS DESC.	JT-39002	E-19072240

Alpa Roof Truss, Maple

Version 8.300 S May 10 2019 MiTek Industries, Inc. Wed Jul 10 10:24:38 2019 Page 1
ID:MF8iIriaTok7DlbpT4B71Xys4PG-?PM6jlcxWAL?KwbuelI7hpk67VBo4mqNngkWoHtyzW1N
Scale = 1:31.2

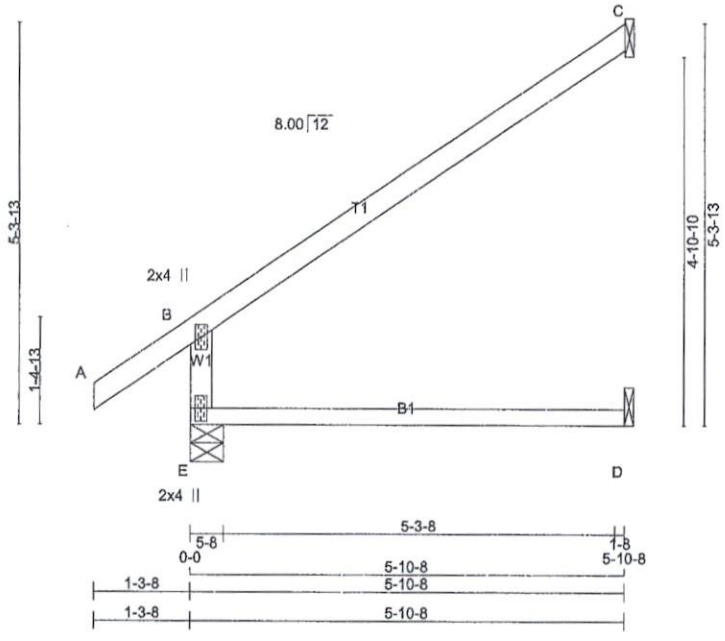

TOTAL WEIGHT = 24 X 16 = 384 lb

[M]

LUMBER
N. L. G. A. RULES

CHORDS	SIZE		LUMBER	DESCR.
E - B	2x4	DRY	No.2	SPF
A - C	2x4	DRY	No.2	SPF
E - D	2x3	DRY	No.2	SPF

DRY: SEASONED LUMBER.

PLATES (table is in inches)

JT	TYPE	PLATES	W	LEN	Y	X
B	TMV+p	MT20	2.0	4.0		
E	BMV1+p	MT20	2.0	4.0		

NOTES- (1)

NOTE: Lateral brace(s) shown shall be 2x4 SPF #2

LICENSED PROFESSIONAL ENGINEER
07/10/2019
R. TURENNE
100157040
PROVINCE OF ONTARIO

DIMENSIONS, SUPPORTS AND LOADINGS SPECIFIED BY FABRICATOR TO BE VERIFIED BY BUILDING DESIGNER

BEARINGS

JT	FACTORED GROSS REACTION VERT	HORZ	MAXIMUM FACTORED GROSS REACTION DOWN	HORZ	UPLIFT	INPUT BRG IN-SX	REQRD BRG IN-SX
E	494	0	494	0	0	5-8	1-8
C	187	0	187	0	0	1-8	1-8
D	43	0	48	0	0	1-8	1-8

SEE MITEK STANDARD DETAIL B97791H FOR CONNECTION TO JOINT(S) C , D

UNFACTORED REACTIONS

JT	1ST LCASE COMBINED	MAX./MIN. COMPONENT REACTIONS SNOW	LIVE	PERM.LIVE	WIND	DEAD	SOIL
E	348	235 / 0	0 / 0	0 / 0	0 / 0	113 / 0	0 / 0
C	129	103 / 0	0 / 0	0 / 0	0 / 0	26 / 0	0 / 0
D	34	0 / 0	0 / 0	0 / 0	0 / 0	34 / 0	0 / 0

BEARING MATERIAL TO BE SPF NO.2 OR BETTER AT JOINT(S) E

BRACING
TOP CHORD TO BE SHEATHED OR MAX. PURLIN SPACING = 6.25 FT.
MAX. UNBRACED BOTTOM CHORD LENGTH = 10.00 FT OR RIGID CEILING DIRECTLY APPLIED.

ALL PITCH BREAKS AND PERIMETER CORNER JOINTS MUST BE LATERALLY RESTRAINED.

LOADING
TOTAL LOAD CASES: (4)

CHORDS

MEMB. FR-TO	MAX. FACTORED FORCE (LBS)	FACTORED VERT. LOAD (PLF) FROM	TO	LC1	MAX CSI (LC)	MAX. UNBRAC LENGTH
E- B	-428 / 0	0.0	0.0	0.16 (4)		7.81
A- B	0 / 32	-84.9	-84.9	0.11 (1)		10.00
B- C	-35 / 0	-84.9	-84.9	0.50 (1)		6.25
E- D	0 / 0	-18.5	-18.5	0.30 (4)		10.00

WEBS

MEMB. FR-TO	MAX. FACTORED FORCE (LBS)	MAX CSI (LC)

DESIGN CRITERIA

SPECIFIED LOADS:

TOP CH.	LL =	23.3	PSF
	DL =	6.0	PSF
BOT CH.	LL =	0.0	PSF
	DL =	7.4	PSF
TOTAL LOAD	=	36.7	PSF

SPACING = 24.0 IN. C/C

THIS TRUSS IS DESIGNED FOR RESIDENTIAL OR SMALL BUILDING REQUIREMENTS OF PART 9, NBCC 2010, NBCC 2015

THIS DESIGN COMPLIES WITH:
- PART 9 OF BCBC 2018 , OBC 2012
- CSA 086-09, CSA 086-14
- TPIC 2011, TPIC 2014

DESIGN ASSUMPTIONS
-OVERHANG NOT TO BE ALTERED OR CUT OFF.

(55 % OF 27.2 P.S.F. G.S.L. PLUS 8.4 P.S.F. RAIN LOAD) EQUALS 23.3 P.S.F. SPECIFIED ROOF LIVE LOAD

ALLOWABLE DEFL.(LL)= L/360 (0.20")
CALCULATED VERT. DEFL.(LL) = L/ 999 (0.00")
ALLOWABLE DEFL.(TL)= L/360 (0.20")
CALCULATED VERT. DEFL.(TL) = L/ 932 (0.08")

CSI: TC=0.50/1.00 (B-C:1) , BC=0.30/1.00 (D-E:4) , WB=0.00/1.00 (n/a:0) , SSI=0.20/1.00 (B-C:1)

DOL LUMBER=1.00 NAIL=1.00 LS BEND=1.10 COMP=1.10 SHEAR=1.10 TENS= 1.10

COMPANION LIVE LOAD FACTOR = 1.00

TRUSS PLATE MANUFACTURER IS NOT RESPONSIBLE FOR QUALITY CONTROL IN THE TRUSS MANUFACTURING PLANT .

NAIL VALUES

PLATE	GRIP(DRY) (PSI) MAX	MIN	SHEAR (PLI) MAX	MIN	SECTION (PLI) MAX	MIN
MT20	618	354	1667	788	1987	1656

PLATE PLACEMENT TOL. = 0.250 Inches

PLATE ROTATION TOL. = 5.0 Deg.

JSI GRIP= 0.28 (B) (INPUT = 0.90)
JSI METAL= 0.22 (B) (INPUT = 1.00)

JOB NAME	TRUSS NAME	QUANTITY	PLY	JOB DESC.	DRWG NO.
310386	H1	1	2	TRUSS DESC. JT-39002	E-19072246

Alpa Roof Truss, Maple

Version 8.300 S May 10 2019 MiTek Industries, Inc. Wed Jul 10 13:36:37 2019 Page 1
ID:MF8IiriaTok7DlbpT4B71Xys4PG-DTtmIV0PnNdam8hlxSHxAshc9aCaBOTHTMMq4jyzTDO
Scale = 1:42.8

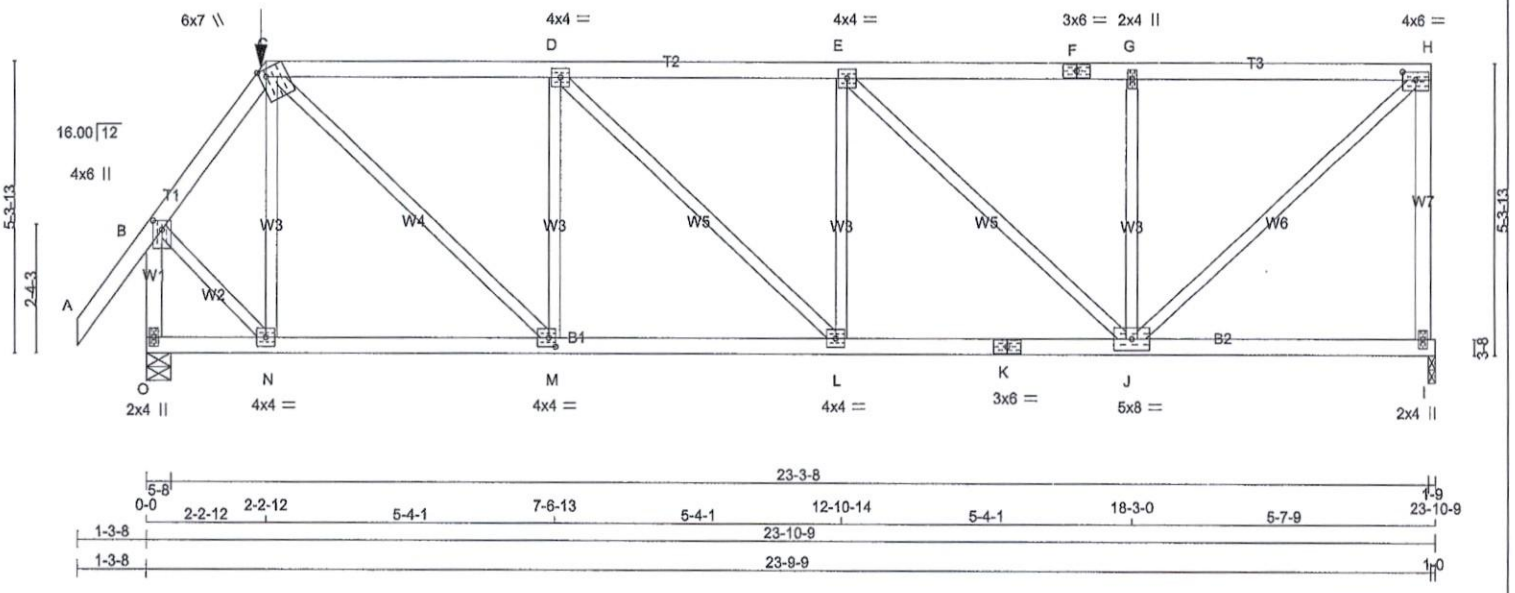

TOTAL WEIGHT = 4 X 107 = 428 lb
[M]

LUMBER
N. L. G. A. RULES

CHORDS	SIZE		LUMBER	DESCR.
A - C	2x4	DRY	No.2	SPF
C - F	2x4	DRY	No.2	SPF
F - H	2x4	DRY	No.2	SPF
I - H	2x4	DRY	No.2	SPF
O - B	2x4	DRY	No.2	SPF
O - K	2x4	DRY	No.2	SPF
K - I	2x4	DRY	No.2	SPF
ALL WEBS EXCEPT	2x3	DRY	No.2	SPF

DRY: SEASONED LUMBER.

DESIGN CONSISTS OF 2 TRUSSES BUILT SEPARATELY THEN FASTENED TOGETHER AS FOLLOWS:

CHORDS	#ROWS	SURFACE SPACING (IN)	LOAD(PLF)
TOP CHORDS : (0.122"X3") SPIRAL NAILS			
A- C	1	12	SIDE(61.0)
C- F	1	12	SIDE(41.1)
F- H	1	12	SIDE(41.1)
H- I	1	12	TOP
O- B	1	12	TOP
BOTTOM CHORDS : (0.122"X3") SPIRAL NAILS			
O- K	1	12	SIDE(10.0)
K- I	1	12	SIDE(10.0)
WEBS : (0.122"X3") SPIRAL NAILS			
2x3	1	6	

NAILS TO BE DRIVEN FROM ONE SIDE ONLY.

GIRDER NAILING ASSUMES NAILED HANGERS ARE FASTENED WITH MIN. 3-0 INCH NAILS.

TOP - COMPONENTS ARE LOADED FROM THE TOP AND MUST BE PLACED ON TOP EDGE OF ALL PLIES FOR THE LOAD TO BE TRANSFERRED TO EACH PLY.

NOTE: Lateral brace(s) shown shall be 2x4 SPF #2

LICENSED PROFESSIONAL ENGINEER
07/10/2019
R. TURENNE
100157040
PROVINCE OF ONTARIO

DIMENSIONS, SUPPORTS AND LOADINGS SPECIFIED BY FABRICATOR TO BE VERIFIED BY BUILDING DESIGNER

BEARINGS

JT	FACTORED GROSS REACTION VERT	HORZ	MAXIMUM FACTORED GROSS REACTION DOWN	HORZ	UPLIFT	INPUT BRG IN-SX	REQRD BRG IN-SX
I	2426	0	2426	0	0	1-9	1-8
O	2491	0	2491	0	0	5-8	1-14

UNFACTORED REACTIONS

JT	1ST LCASE COMBINED	MAX./MIN. COMPONENT REACTIONS SNOW	LIVE	PERM.LIVE	WIND	DEAD	SOIL
I	1722	1093 / 0	0 / 0	0 / 0	0 / 0	628 / 0	0 / 0
O	1767	1129 / 0	0 / 0	0 / 0	0 / 0	638 / 0	0 / 0

BEARING MATERIAL TO BE SPF NO.2 OR BETTER AT JOINT(S) I, O

BRACING
TOP CHORD TO BE SHEATHED OR MAX. PURLIN SPACING = 4.84 FT.
MAX. UNBRACED BOTTOM CHORD LENGTH = 10.00 FT OR RIGID CEILING DIRECTLY APPLIED.

ALL PITCH BREAKS AND PERIMETER CORNER JOINTS MUST BE LATERALLY RESTRAINED.

LOADING
TOTAL LOAD CASES: (4)

CHORDS

MEMB. FR-TO	MAX. FACTORED FORCE (LBS)	FACTORED VERT. LOAD LC1 (PLF) FROM	TO	MAX CSI (LC)	MAX. UNBRAC LENGTH
A- B	0 / 48	-84.9	-84.9	0.07 (1)	10.00
B- C	-1738 / 0	-84.9	-84.9	0.05 (1)	6.25
C- D	-2612 / 0	-167.1	-167.1	0.43 (1)	5.08
D- E	-2932 / 0	-167.1	-167.1	0.44 (1)	4.84
E- F	-2176 / 0	-167.1	-167.1	0.43 (1)	5.43
F- G	-2176 / 0	-167.1	-167.1	0.43 (1)	5.43
G- H	-2176 / 0	-167.1	-167.1	0.43 (1)	5.43
I- H	-2342 / 0	0.0	0.0	0.59 (1)	7.34
O- B	-2480 / 0	0.0	0.0	0.17 (1)	7.17
O- N	0 / 0	-36.4	-36.4	0.08 (4)	10.00
N- M	0 / 1017	-36.4	-36.4	0.16 (4)	10.00
M- L	0 / 2612	-36.4	-36.4	0.29 (1)	10.00
L- K	0 / 2932	-36.4	-36.4	0.33 (1)	10.00
K- J	0 / 2932	-36.4	-36.4	0.33 (1)	10.00
J- I	0 / 0	-36.4	-36.4	0.14 (4)	10.00

WEBS

MEMB. FR-TO	MAX. FACTORED FORCE (LBS)	MAX CSI (LC)
N- C	-699 / 0	0.15 (1)
C- M	0 / 2180	0.27 (1)
M- D	-1292 / 0	0.28 (1)
D- L	0 / 439	0.05 (1)
L- E	-114 / 94	0.02 (1)
E- J	-1039 / 0	0.55 (1)
J- G	-1038 / 0	0.23 (1)
J- H	0 / 2936	0.36 (1)
B- N	0 / 1348	0.17 (1)

FACTORED CONCENTRATED LOADS (LBS)

JT	LOC.	LC1	MAX-	MAX+	FACE	DIR.	TYPE	HEEL	CONN.
C	2-2-12	-138	-138	---	FRONT	VERT	TOTAL	---	C1

CONNECTION REQUIREMENTS

1) C1: A SUITABLE HANGER/MECHANICAL CONNECTION IS REQUIRED.

DESIGN CRITERIA

SPECIFIED LOADS:

TOP CH.	LL =	23.3	PSF
	DL =	6.0	PSF
BOT CH.	LL =	0.0	PSF
	DL =	7.4	PSF
TOTAL LOAD	=	36.7	PSF

SPACING = 24.0 IN. C/C

LOADING IN FLAT SECTION BASED ON A SLOPE OF 2.00/12 MINIMUM

GIRDER TYPE: CPrimeHip
LEFT SETBACK = 2-2-12
RIGHT SETBACK = 0-0
END SETBACK = 5-10-8
END WALL WIDTH = 0-0
CORNER FRAMING TYPE: CONVENTIONAL
END JACK TYPE: CONVENTIONAL
APPLIED TO FRONT SIDE
- ADDT'L LOADS BASED ON 55 % OF GSL.

THIS TRUSS IS DESIGNED FOR RESIDENTIAL OR SMALL BUILDING REQUIREMENTS OF PART 9, NBCC 2010, NBCC 2015

THIS DESIGN COMPLIES WITH:
- PART 9 OF BCBC 2018 , OBC 2012
- CSA 086-09, CSA 086-14
- TPIC 2011, TPIC 2014

(55 % OF 27.2 P.S.F. G.S.L. PLUS 8.4 P.S.F. RAIN LOAD) EQUALS 23.3 P.S.F. SPECIFIED ROOF LIVE LOAD

ALLOWABLE DEFL.(LL)= L/360 (0.79")
CALCULATED VERT. DEFL.(LL) = L/ 999 (0.05")
ALLOWABLE DEFL.(TL)= L/360 (0.79")
CALCULATED VERT. DEFL.(TL) = L/ 999 (0.10")

CSI: TC=0.59/1.00 (H-I:1) , BC=0.33/1.00 (J-L:1) , WB=0.55/1.00 (E-J:1) , SSI=0.24/1.00 (G-H:1)

DOL LUMBER=1.00 NAIL=1.00 LS BEND=1.00 COMP=1.00 SHEAR=1.00 TENS= 1.00

COMPANION LIVE LOAD FACTOR = 1.00

TRUSS PLATE MANUFACTURER IS NOT RESPONSIBLE FOR QUALITY CONTROL IN THE TRUSS MANUFACTURING PLANT .

NAIL VALUES

PLATE	GRIP(DRY) (PSI) MAX	MIN	SHEAR (PLI) MAX	MIN	SECTION (PLI) MAX	MIN
MT20	618	354	1667	788	1987	1656

PLATE PLACEMENT TOL. = 0.250 Inches

PLATE ROTATION TOL. = 5.0 Deg.

JSI GRIP= 0.84 (M) (INPUT = 0.90)
JSI METAL= 0.47 (K) (INPUT = 1.00)

CONTINUED ON PAGE 2

JOB NAME	TRUSS NAME	QUANTITY	PLY	JOB DESC.	DRWG NO.
310386	H1	1	2	TRUSS DESC. JT-39002	E-19072246(2)

Alpa Roof Truss, Maple

Version 8.300 S May 10 2019 MiTek Industries, Inc. Wed Jul 10 13:36:38 2019 Page 2
ID:MF8IirlaTok7DlbpT4B71Xys4PG-hfR8Wr11YhIROIGxV9pAj4EnuzXpwrjQl05Nc9yzTDN

PLATES (table is in inches)

JT	TYPE	PLATES	W	LEN	Y	X
B	TMVW+p	MT20	4.0	6.0	2.00	2.00
C	TTWW+m	MT20	6.0	7.0	Edge	1.50
D	TMWW-t	MT20	4.0	4.0		
E	TMWW-t	MT20	4.0	4.0		
F	TS-t	MT20	3.0	6.0		
G	TMW+w	MT20	2.0	4.0		
H	TMVW-t	MT20	4.0	6.0	1.75	3.00
I	BMV1+p	MT20	2.0	4.0		
J	BMWWW-t	MT20	5.0	8.0		
K	BS-t	MT20	3.0	6.0		
L	BMWW-t	MT20	4.0	4.0		
M	BMWW-t	MT20	4.0	4.0	2.00	1.50
N	BMWW-t	MT20	4.0	4.0		
O	BMV1+p	MT20	2.0	4.0		

Edge - INDICATES REFERENCE CORNER OF PLATE TOUCHES EDGE OF CHORD.

NOTES- (1)

NOTE: Lateral brace(s) shown shall be 2x4 SPF #2

LICENSED PROFESSIONAL ENGINEER
07/10/2019
R. TURENNE
100157040
PROVINCE OF ONTARIO

JOB NAME	TRUSS NAME	QUANTITY	PLY	JOB DESC.	DRWG NO.
310386	H2	1	1	TRUSS DESC. JT-39002	E-19072247

Alpa Roof Truss, Maple

Version 8.300 S May 10 2019 MiTek Industries, Inc. Wed Jul 10 13:36:40 2019 Page 1
ID:MF8IrlaTok7DlbpT4B71Xys4PG-e2ZuxW2I4I?9dbQKcareoVJ7onETOmPj9KaUh2yzTDL
Scale = 1:42.6

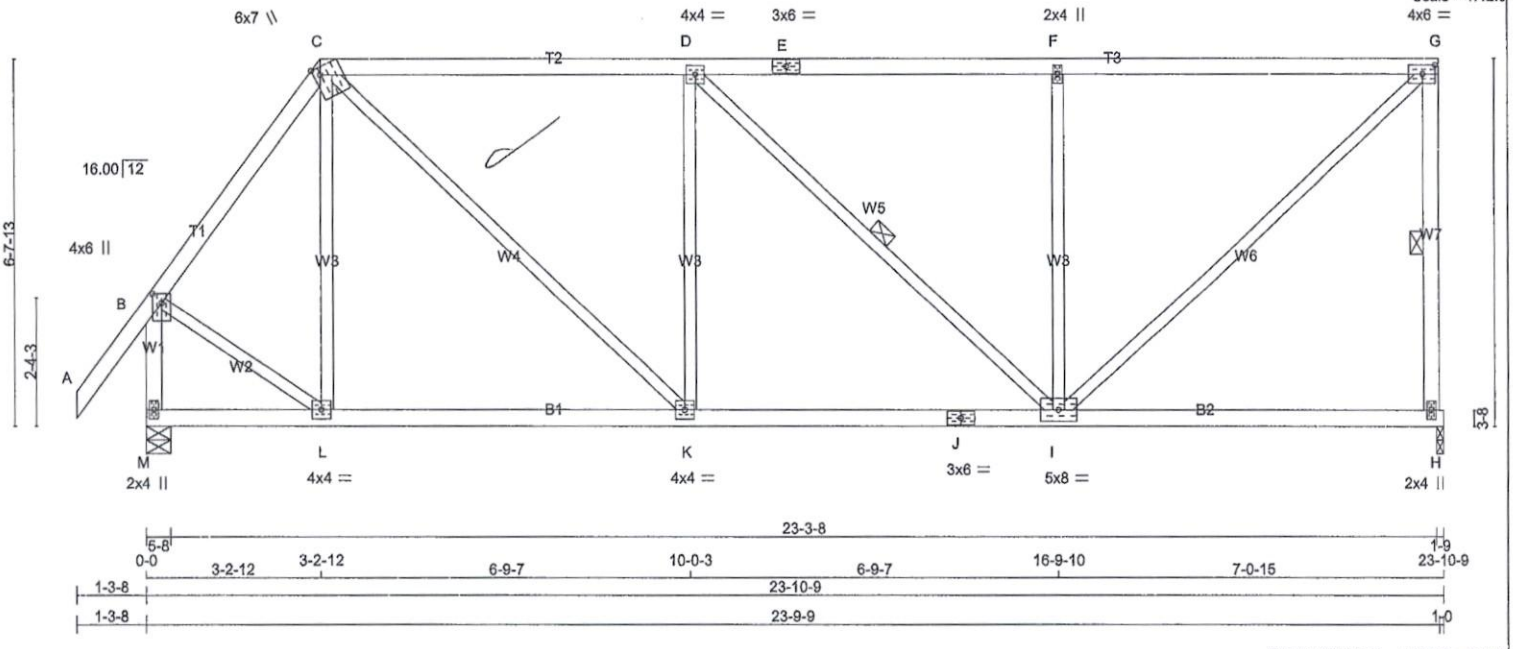

TOTAL WEIGHT = 4 X 108 = 434 lb

[M]

LUMBER
N. L. G. A. RULES

CHORDS	SIZE		LUMBER	DESCR.
A - C	2x4	DRY	No.2	SPF
C - E	2x4	DRY	No.2	SPF
E - G	2x4	DRY	No.2	SPF
H - G	2x4	DRY	No.2	SPF
M - B	2x4	DRY	No.2	SPF
M - J	2x4	DRY	No.2	SPF
J - H	2x4	DRY	No.2	SPF
ALL WEBS EXCEPT	2x3	DRY	No.2	SPF

DRY: SEASONED LUMBER.

PLATES (table is in inches)

JT	TYPE	PLATES	W	LEN	Y	X
B	TMVW+p	MT20	4.0	6.0	2.00	2.00
C	TTWW+m	MT20	6.0	7.0	Edge	1.50
D	TMWW-t	MT20	4.0	4.0		
E	TS-t	MT20	3.0	6.0		
F	TMW+w	MT20	2.0	4.0		
G	TMVW-t	MT20	4.0	6.0	2.00	2.75
H	BMV1+p	MT20	2.0	4.0		
I	BMWWW-t	MT20	5.0	8.0		
J	BS-t	MT20	3.0	6.0		
K	BMWW-t	MT20	4.0	4.0		
L	BMWW-t	MT20	4.0	4.0		
M	BMV1+p	MT20	2.0	4.0		

Edge - INDICATES REFERENCE CORNER OF PLATE TOUCHES EDGE OF CHORD.

NOTES- (1)

NOTE: Lateral brace(s) shown shall be 2x4 SPF #2

LICENSED PROFESSIONAL ENGINEER
07/10/2019
R. TURENNE
100157040
PROVINCE OF ONTARIO

DIMENSIONS, SUPPORTS AND LOADINGS SPECIFIED BY FABRICATOR TO BE VERIFIED BY BUILDING DESIGNER

BEARINGS

JT	FACTORED GROSS REACTION VERT	HORZ	MAXIMUM FACTORED GROSS REACTION DOWN	HORZ	UPLIFT	INPUT BRG IN-SX	REQRD BRG IN-SX
H	1230	0	1230	0	0	1-9	1-8
M	1349	0	1349	0	0	5-8	2-0

UNFACTORED REACTIONS

JT	1ST LCASE COMBINED	MAX./MIN. COMPONENT REACTIONS SNOW	LIVE	PERM.LIVE	WIND	DEAD	SOIL
H	873	554 / 0	0 / 0	0 / 0	0 / 0	319 / 0	0 / 0
M	956	620 / 0	0 / 0	0 / 0	0 / 0	336 / 0	0 / 0

BEARING MATERIAL TO BE SPF NO.2 OR BETTER AT JOINT(S) H, M

BRACING
TOP CHORD TO BE SHEATHED OR MAX. PURLIN SPACING = 4.99 FT.
MAX. UNBRACED BOTTOM CHORD LENGTH = 10.00 FT OR RIGID CEILING DIRECTLY APPLIED.

ALL PITCH BREAKS AND PERIMETER CORNER JOINTS MUST BE LATERALLY RESTRAINED.

1 LATERAL BRACE(S) AT 1/ 2 LENGTH OF G-H, D-I.

END VERTICAL(S) MUST BE SHEATHED OR HAVE BRACES AS INDICATED IN THE MAX. UNBRACED LENGTH COLUMN OF THE TABLE BELOW

LOADING
TOTAL LOAD CASES: (4)

CHORDS

MEMB. FR-TO	MAX. FACTORED FORCE (LBS)	FACTORED VERT. LOAD (PLF) FROM	TO	LC1	MAX CSI (LC)	MAX. UNBRAC LENGTH
A- B	0 / 48	-84.9	-84.9	0.12 (1)	10.00	
B- C	-935 / 0	-84.9	-84.9	0.17 (1)	6.20	
C- D	-1191 / 0	-84.9	-84.9	0.61 (1)	4.99	
D- E	-1031 / 0	-84.9	-84.9	0.62 (1)	5.22	
E- F	-1031 / 0	-84.9	-84.9	0.62 (1)	5.22	
F- G	-1031 / 0	-84.9	-84.9	0.63 (1)	5.22	
H- G	-1177 / 0	0.0	0.0	0.24 (1)	5.88	
M- B	-1336 / 0	0.0	0.0	0.17 (1)	7.00	
M- L	0 / 0	-18.5	-18.5	0.13 (4)	10.00	
L- K	0 / 554	-18.5	-18.5	0.21 (4)	10.00	
K- J	0 / 1191	-18.5	-18.5	0.32 (4)	10.00	
J- I	0 / 1191	-18.5	-18.5	0.32 (4)	10.00	
I- H	0 / 0	-18.5	-18.5	0.21 (4)	10.00	

WEBS

MEMB. FR-TO	MAX. FACTORED FORCE (LBS)	MAX CSI (LC)
L- C	-219 / 0	0.16 (1)
C- K	0 / 871	0.20 (1)
K- D	-471 / 0	0.34 (1)
D- I	-219 / 0	0.13 (1)
I- F	-645 / 0	0.47 (1)
I- G	0 / 1393	0.31 (1)
B- L	0 / 646	0.15 (1)

DESIGN CRITERIA

SPECIFIED LOADS:

TOP CH.	LL	=	23.3	PSF
	DL	=	6.0	PSF
BOT CH.	LL	=	0.0	PSF
	DL	=	7.4	PSF
TOTAL LOAD		=	36.7	PSF

SPACING = 24.0 IN. C/C

LOADING IN FLAT SECTION BASED ON A SLOPE OF 2.00/12 MINIMUM

THIS TRUSS IS DESIGNED FOR RESIDENTIAL OR SMALL BUILDING REQUIREMENTS OF PART 9, NBCC 2010, NBCC 2015

THIS DESIGN COMPLIES WITH:
- PART 9 OF BCBC 2018 , OBC 2012
- CSA 086-09, CSA 086-14
- TPIC 2011, TPIC 2014

(55 % OF 27.2 P.S.F. G.S.L. PLUS 8.4 P.S.F. RAIN LOAD) EQUALS 23.3 P.S.F. SPECIFIED ROOF LIVE LOAD

ALLOWABLE DEFL.(LL)= L/360 (0.79")
CALCULATED VERT. DEFL.(LL) = L/ 999 (0.04")
ALLOWABLE DEFL.(TL)= L/360 (0.79")
CALCULATED VERT. DEFL.(TL) = L/ 999 (0.10")

CSI: TC=0.63/1.00 (F-G:1) , BC=0.32/1.00 (I-K:4) , WB=0.47/1.00 (F-I:1) , SSI=0.28/1.00 (F-G:1)

DOL LUMBER=1.00 NAIL=1.00 LS BEND=1.10 COMP=1.10 SHEAR=1.10 TENS= 1.10

COMPANION LIVE LOAD FACTOR = 1.00

TRUSS PLATE MANUFACTURER IS NOT RESPONSIBLE FOR QUALITY CONTROL IN THE TRUSS MANUFACTURING PLANT .

NAIL VALUES

PLATE	GRIP(DRY) (PSI) MAX	MIN	SHEAR (PLI) MAX	MIN	SECTION (PLI) MAX	MIN
MT20	618	354	1667	788	1987	1656

PLATE PLACEMENT TOL. = 0.250 Inches

PLATE ROTATION TOL. = 5.0 Deg.

JSI GRIP= 0.89 (G) (INPUT = 0.90)
JSI METAL= 0.36 (B) (INPUT = 1.00)

JOB NAME	TRUSS NAME	QUANTITY	PLY	JOB DESC.		DRWG NO.
310386	H3	4	1	TRUSS DESC.	JT-39002	E-19072248

Alpa Roof Truss, Maple

Version 8.300 S May 10 2019 MiTek Industries, Inc. Wed Jul 10 13:36:41 2019 Page 1
ID:MF8iirlaTok7DlbpT4B71Xys4PG-6E7G8s3wrc70Fl?WAlMtKisJrBaH79OsO_K1DUyzTDK
Scale = 1:51.4

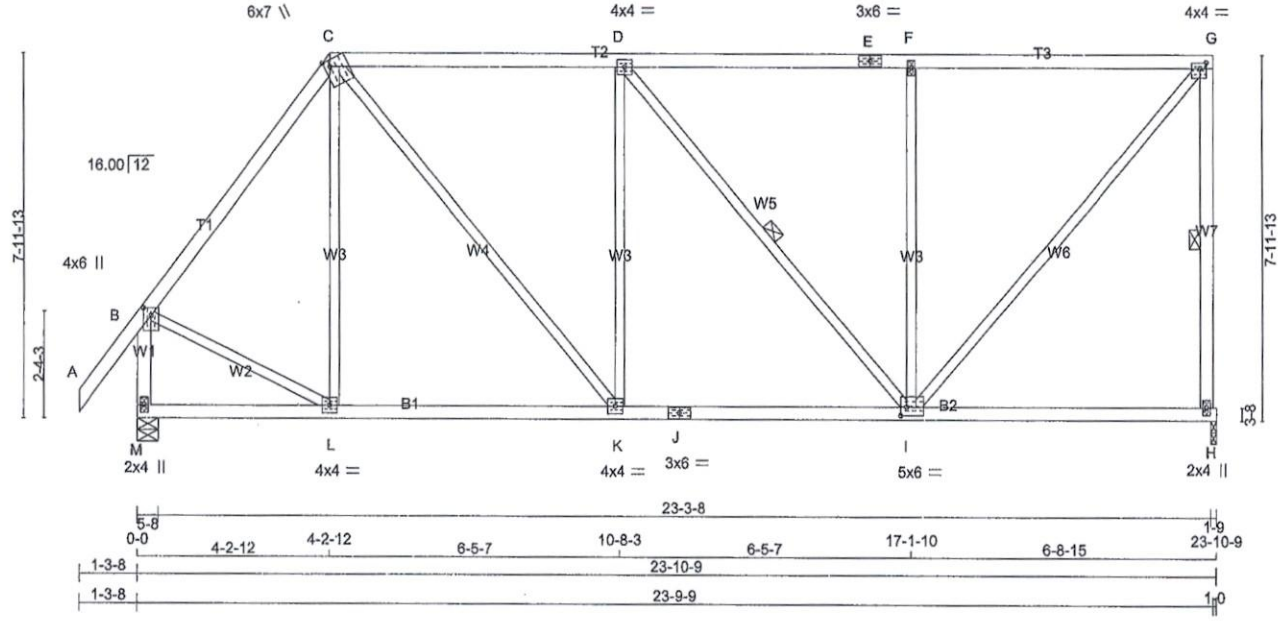

TOTAL WEIGHT = 4 X 116 = 466 lb

[M]

LUMBER

N. L. G. A. RULES

CHORDS	SIZE		LUMBER	DESCR.
A - C	2x4	DRY	No.2	SPF
C - E	2x4	DRY	No.2	SPF
E - G	2x4	DRY	No.2	SPF
H - G	2x4	DRY	No.2	SPF
M - B	2x4	DRY	No.2	SPF
M - J	2x4	DRY	No.2	SPF
J - H	2x4	DRY	No.2	SPF
ALL WEBS EXCEPT	2x3	DRY	No.2	SPF

DRY: SEASONED LUMBER.

PLATES (table is in inches)

JT	TYPE	PLATES	W	LEN	Y	X
B	TMVW+p	MT20	4.0	6.0	2.00	2.00
C	TTWW+m	MT20	6.0	7.0	Edge	1.50
D	TMWW-t	MT20	4.0	4.0		
E	TS-t	MT20	3.0	6.0		
F	TMW+w	MT20	2.0	4.0		
G	TMVW-t	MT20	4.0	4.0	1.50	1.75
H	BMV1+p	MT20	2.0	4.0		
I	BMWWW-t	MT20	5.0	6.0	2.25	1.50
J	BS-t	MT20	3.0	6.0		
K	BMWW-t	MT20	4.0	4.0		
L	BMWW-t	MT20	4.0	4.0		
M	BMV1+p	MT20	2.0	4.0		

Edge - INDICATES REFERENCE CORNER OF PLATE TOUCHES EDGE OF CHORD.

NOTES- (1)

NOTE: Lateral brace(s) shown shall be 2x4 SPF #2

LICENSED PROFESSIONAL ENGINEER
07/10/2019
R. TURENNE
100157040
PROVINCE OF ONTARIO

DIMENSIONS, SUPPORTS AND LOADINGS SPECIFIED BY FABRICATOR TO BE VERIFIED BY BUILDING DESIGNER

BEARINGS

JT	FACTORED GROSS REACTION VERT	HORZ	MAXIMUM FACTORED GROSS REACTION DOWN	HORZ	UPLIFT	INPUT BRG IN-SX	REQRD BRG IN-SX
H	1230	0	1230	0	0	1-9	1-8
M	1349	0	1349	0	0	5-8	2-0

UNFACTORED REACTIONS

JT	1ST LCASE COMBINED	MAX./MIN. COMPONENT REACTIONS SNOW	LIVE	PERM.LIVE	WIND	DEAD	SOIL
H	873	554 / 0	0 / 0	0 / 0	0 / 0	319 / 0	0 / 0
M	956	620 / 0	0 / 0	0 / 0	0 / 0	336 / 0	0 / 0

BEARING MATERIAL TO BE SPF NO.2 OR BETTER AT JOINT(S) H, M

BRACING

TOP CHORD TO BE SHEATHED OR MAX. PURLIN SPACING = 5.48 FT.
MAX. UNBRACED BOTTOM CHORD LENGTH = 10.00 FT OR RIGID CEILING DIRECTLY APPLIED.

ALL PITCH BREAKS AND PERIMETER CORNER JOINTS MUST BE LATERALLY RESTRAINED.

1 LATERAL BRACE(S) AT 1/ 2 LENGTH OF G-H, D-I.

END VERTICAL(S) MUST BE SHEATHED OR HAVE BRACES AS INDICATED IN THE MAX. UNBRACED LENGTH COLUMN OF THE TABLE BELOW

LOADING

TOTAL LOAD CASES: (4)

CHORDS

MEMB. FR-TO	MAX. FACTORED FORCE (LBS)	FACTORED VERT. LOAD LC1 (PLF) FROM	TO	MAX CSI (LC)	MAX. UNBRAC LENGTH
A- B	0 / 48	-84.9	-84.9	0.12 (1)	10.00
B- C	-954 / 0	-84.9	-84.9	0.30 (1)	5.98
C- D	-993 / 0	-84.9	-84.9	0.53 (1)	5.48
D- E	-824 / 0	-84.9	-84.9	0.54 (1)	5.83
E- F	-824 / 0	-84.9	-84.9	0.54 (1)	5.83
F- G	-824 / 0	-84.9	-84.9	0.54 (1)	5.83
H- G	-1180 / 0	0.0	0.0	0.34 (1)	5.88
M- B	-1322 / 0	0.0	0.0	0.17 (1)	7.03
M- L	0 / 0	-18.5	-18.5	0.13 (4)	10.00
L- K	0 / 567	-18.5	-18.5	0.19 (4)	10.00
K- J	0 / 993	-18.5	-18.5	0.28 (4)	10.00
J- I	0 / 993	-18.5	-18.5	0.28 (4)	10.00
I- H	0 / 0	-18.5	-18.5	0.19 (4)	10.00

WEBS

MEMB. FR-TO	MAX. FACTORED FORCE (LBS)	MAX CSI (LC)
L- C	-146 / 28	0.18 (1)
C- K	0 / 660	0.15 (1)
K- D	-389 / 0	0.47 (1)
D- I	-264 / 0	0.19 (1)
I- F	-613 / 0	0.74 (1)
I- G	0 / 1258	0.28 (1)
B- L	0 / 625	0.14 (1)

DESIGN CRITERIA

SPECIFIED LOADS:

TOP CH.	LL	=	23.3	PSF
	DL	=	6.0	PSF
BOT CH.	LL	=	0.0	PSF
	DL	=	7.4	PSF
TOTAL LOAD		=	36.7	PSF

SPACING = 24.0 IN. C/C

LOADING IN FLAT SECTION BASED ON A SLOPE OF 2.00/12 MINIMUM

THIS TRUSS IS DESIGNED FOR RESIDENTIAL OR SMALL BUILDING REQUIREMENTS OF PART 9, NBCC 2010, NBCC 2015

THIS DESIGN COMPLIES WITH:
- PART 9 OF BCBC 2018 , OBC 2012
- CSA 086-09, CSA 086-14
- TPIC 2011, TPIC 2014

(55 % OF 27.2 P.S.F. G.S.L. PLUS 8.4 P.S.F. RAIN LOAD) EQUALS 23.3 P.S.F. SPECIFIED ROOF LIVE LOAD

ALLOWABLE DEFL.(LL)= L/360 (0.79")
CALCULATED VERT. DEFL.(LL) = L/ 999 (0.04")
ALLOWABLE DEFL.(TL)= L/360 (0.79")
CALCULATED VERT. DEFL.(TL) = L/ 999 (0.08")

CSI: TC=0.54/1.00 (F-G:1) , BC=0.28/1.00 (I-K:4) , WB=0.74/1.00 (F-I:1) , SSI=0.26/1.00 (F-G:1)

DOL LUMBER=1.00 NAIL=1.00 LS BEND=1.10 COMP=1.10 SHEAR=1.10 TENS= 1.10

COMPANION LIVE LOAD FACTOR = 1.00

TRUSS PLATE MANUFACTURER IS NOT RESPONSIBLE FOR QUALITY CONTROL IN THE TRUSS MANUFACTURING PLANT .

NAIL VALUES

PLATE	GRIP(DRY) (PSI) MAX	MIN	SHEAR (PLI) MAX	MIN	SECTION (PLI) MAX	MIN
MT20	618	354	1667	788	1987	1656

PLATE PLACEMENT TOL. = 0.250 Inches

PLATE ROTATION TOL. = 5.0 Deg.

JSI GRIP= 0.88 (I) (INPUT = 0.90)
JSI METAL= 0.37 (B) (INPUT = 1.00)

JOB NAME	TRUSS NAME	QUANTITY	PLY	JOB DESC.	DRWG NO.
310386	H4	4	1	TRUSS DESC. JT-39002	E-19072249

Alpa Roof Truss, Maple

Version 8.300 S May 10 2019 MiTek Industries, Inc. Wed Jul 10 13:36:42 2019 Page 1
ID:MF8IiriaTok7DIbpT4B71Xys4PG-aRhfLC4YcwFtsvaik?t6twOVNbx_si30ce3biwyzTDJ

Scale = 1:52.7

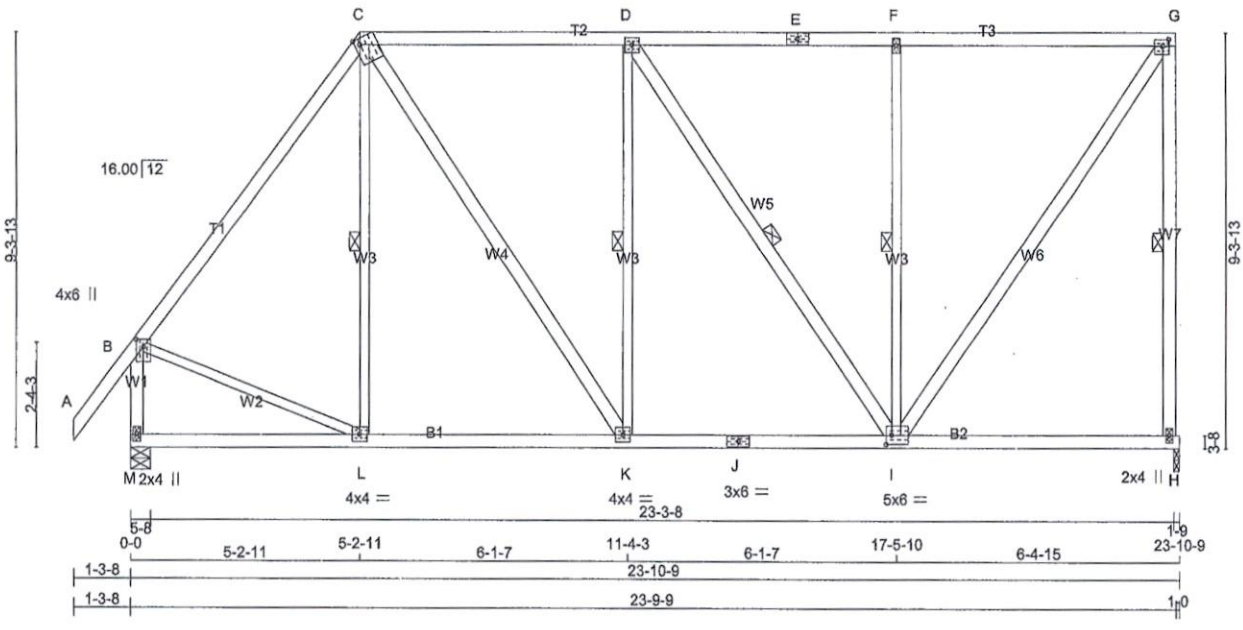

TOTAL WEIGHT = 4 X 135 = 541 lb

[M]

LUMBER

N. L. G. A. RULES

CHORDS	SIZE		LUMBER	DESCR.
A - C	2x4	DRY	No.2	SPF
C - E	2x4	DRY	No.2	SPF
E - G	2x4	DRY	No.2	SPF
H - G	2x4	DRY	No.2	SPF
M - B	2x4	DRY	No.2	SPF
M - J	2x4	DRY	No.2	SPF
J - H	2x4	DRY	No.2	SPF
ALL WEBS	2x3	DRY	No.2	SPF
EXCEPT				
C - K	2x4	DRY	No.2	SPF
D - I	2x4	DRY	No.2	SPF
I - G	2x4	DRY	No.2	SPF

DRY: SEASONED LUMBER.

PLATES (table Is In Inches)

JT	TYPE	PLATES	W	LEN	Y	X
B	TMVW+p	MT20	4.0	6.0	2.00	2.00
C	TTWW+m	MT20	6.0	7.0	Edge	1.50
D	TMWW-t	MT20	4.0	4.0		
E	TS-t	MT20	3.0	6.0		
F	TMW+w	MT20	2.0	4.0		
G	TMVW-t	MT20	4.0	4.0	1.75	1.75
H	BMV1+p	MT20	2.0	4.0		
I	BMWWW-t	MT20	5.0	6.0	2.50	1.50
J	BS-t	MT20	3.0	6.0		
K	BMWW-t	MT20	4.0	4.0		
L	BMWW-t	MT20	4.0	4.0		
M	BMV1+p	MT20	2.0	4.0		

Edge - INDICATES REFERENCE CORNER OF PLATE TOUCHES EDGE OF CHORD.

NOTES- (1)

NOTE: Lateral brace(s) shown shall be 2x4 SPF #2

LICENSED PROFESSIONAL ENGINEER
07/10/2019
R. TURENNE
100157040
PROVINCE OF ONTARIO

DIMENSIONS, SUPPORTS AND LOADINGS SPECIFIED BY FABRICATOR TO BE VERIFIED BY BUILDING DESIGNER

BEARINGS

JT	FACTORED GROSS REACTION VERT	HORZ	MAXIMUM FACTORED GROSS REACTION DOWN	HORZ	UPLIFT	INPUT BRG IN-SX	REQRD BRG IN-SX
H	1230	0	1230	0	0	1-9	1-8
M	1349	0	1349	0	0	5-8	2-0

UNFACTORED REACTIONS

JT	1ST LCASE COMBINED	MAX./MIN. COMPONENT REACTIONS SNOW	LIVE	PERM.LIVE	WIND	DEAD	SOIL
H	873	554 / 0	0 / 0	0 / 0	0 / 0	319 / 0	0 / 0
M	956	620 / 0	0 / 0	0 / 0	0 / 0	336 / 0	0 / 0

BEARING MATERIAL TO BE SPF NO.2 OR BETTER AT JOINT(S) H, M

BRACING

TOP CHORD TO BE SHEATHED OR MAX. PURLIN SPACING = 5.74 FT.
MAX. UNBRACED BOTTOM CHORD LENGTH = 10.00 FT OR RIGID CEILING DIRECTLY APPLIED.

ALL PITCH BREAKS AND PERIMETER CORNER JOINTS MUST BE LATERALLY RESTRAINED.

1 LATERAL BRACE(S) AT 1/ 2 LENGTH OF G-H, C-L, D-K, D-I, F-I.

END VERTICAL(S) MUST BE SHEATHED OR HAVE BRACES AS INDICATED IN THE MAX. UNBRACED LENGTH COLUMN OF THE TABLE BELOW

LOADING

TOTAL LOAD CASES: (4)

CHORDS

MEMB. FR-TO	MAX. FACTORED FORCE (LBS)	FACTORED VERT. LOAD LC1 (PLF) FROM	TO	MAX CSI (LC)	MAX. UNBRAC LENGTH
A- B	0 / 48	-84.9	-84.9	0.12 (1)	10.00
B- C	-949 / 0	-84.9	-84.9	0.49 (1)	5.74
C- D	-848 / 0	-84.9	-84.9	0.46 (1)	5.93
D- E	-677 / 0	-84.9	-84.9	0.47 (1)	6.25
E- F	-677 / 0	-84.9	-84.9	0.47 (1)	6.25
F- G	-677 / 0	-84.9	-84.9	0.48 (1)	6.25
H- G	-1182 / 0	0.0	0.0	0.48 (1)	5.87
M- B	-1311 / 0	0.0	0.0	0.17 (1)	7.06
M- L	0 / 0	-18.5	-18.5	0.14 (4)	10.00
L- K	0 / 566	-18.5	-18.5	0.19 (4)	10.00
K- J	0 / 849	-18.5	-18.5	0.25 (4)	10.00
J- I	0 / 849	-18.5	-18.5	0.25 (4)	10.00
I- H	0 / 0	-18.5	-18.5	0.18 (4)	10.00

WEBS

MEMB. FR-TO	MAX. FACTORED FORCE (LBS)	MAX CSI (LC)
L- C	-91 / 55	0.05 (1)
C- K	0 / 502	0.08 (1)
K- D	-308 / 0	0.18 (1)
D- I	-307 / 0	0.20 (1)
I- F	-582 / 0	0.33 (1)
I- G	0 / 1179	0.19 (1)
B- L	0 / 604	0.14 (1)

DESIGN CRITERIA

SPECIFIED LOADS:

TOP CH.	LL	=	23.3	PSF
	DL	=	6.0	PSF
BOT CH.	LL	=	0.0	PSF
	DL	=	7.4	PSF
TOTAL LOAD		=	36.7	PSF

SPACING = 24.0 IN. C/C

LOADING IN FLAT SECTION BASED ON A SLOPE OF 2.00/12 MINIMUM

THIS TRUSS IS DESIGNED FOR RESIDENTIAL OR SMALL BUILDING REQUIREMENTS OF PART 9, NBCC 2010, NBCC 2015

THIS DESIGN COMPLIES WITH:
- PART 9 OF BCBC 2018 , OBC 2012
- CSA 086-09, CSA 086-14
- TPIC 2011, TPIC 2014

(55 % OF 27.2 P.S.F. G.S.L. PLUS 8.4 P.S.F. RAIN LOAD) EQUALS 23.3 P.S.F. SPECIFIED ROOF LIVE LOAD

ALLOWABLE DEFL.(LL)= L/360 (0.79")
CALCULATED VERT. DEFL.(LL) = L/ 999 (0.03")
ALLOWABLE DEFL.(TL)= L/360 (0.79")
CALCULATFD VERT. DEFL.(TL) = L/ 999 (0.06")

CSI: TC=0.49/1.00 (B-C:1) , BC=0.25/1.00 (I-K:4) , WB=0.33/1.00 (F-I:1) , SSI=0.25/1.00 (F-G:1)

DOL LUMBER=1.00 NAIL=1.00 LS BEND=1.10 COMP=1.10 SHEAR=1.10 TENS= 1.10

COMPANION LIVE LOAD FACTOR = 1.00

TRUSS PLATE MANUFACTURER IS NOT RESPONSIBLE FOR QUALITY CONTROL IN THE TRUSS MANUFACTURING PLANT .

NAIL VALUES

PLATE	GRIP(DRY) (PSI) MAX	MIN	SHEAR (PLI) MAX	MIN	SECTION (PLI) MAX	MIN
MT20	618	354	1667	788	1987	1656

PLATE PLACEMENT TOL. = 0.250 Inches

PLATE ROTATION TOL. = 5.0 Deg.

JSI GRIP= 0.90 (I) (INPUT = 0.90)
JSI METAL= 0.38 (B) (INPUT = 1.00)

JOB NAME	TRUSS NAME	QUANTITY	PLY	JOB DESC.		DRWG NO.
310386	H5	4	1	TRUSS DESC.	JT-39002	E-19072250

Alpa Roof Truss, Maple

Version 8.300 S May 10 2019 MiTek Industries, Inc. Wed Jul 10 13:37:13 2019 Page 1
ID:MF8iIriaTok7DIbpT4B71Xys4PG-AO2NspS_IR9T4gSg20xNdSBmQ4TTddsalz4kKdyzTCq

Scale = 1:60.1

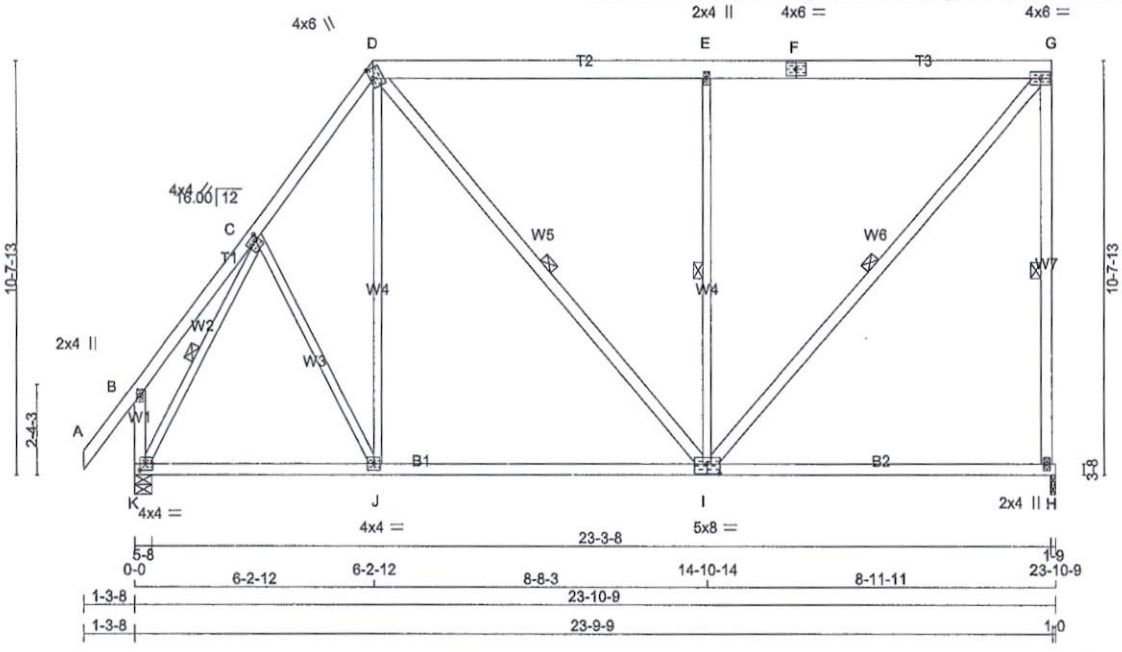

TOTAL WEIGHT = 4 X 143 = 574 lb

[M]

LUMBER

N. L. G. A. RULES

CHORDS	SIZE		LUMBER	DESCR.
A - D	2x4	DRY	No.2	SPF
D - F	2x6	DRY	No.2	SPF
F - G	2x6	DRY	No.2	SPF
H - G	2x4	DRY	No.2	SPF
K - B	2x4	DRY	No.2	SPF
K - I	2x4	DRY	No.2	SPF
I - H	2x4	DRY	No.2	SPF
ALL WEBS EXCEPT	2x3	DRY	No.2	SPF
D - I	2x4	DRY	No.2	SPF
I - G	2x4	DRY	No.2	SPF

DRY: SEASONED LUMBER.

PLATES (table is in inches)

JT	TYPE	PLATES	W	LEN	Y	X
B	TMV+p	MT20	2.0	4.0		
C	TMWW-t	MT20	4.0	4.0	1.50	1.00
D	TTWW+m	MT20	4.0	6.0	3.00	1.00
E	TMW+w	MT20	2.0	4.0		
F	TS-t	MT20	4.0	6.0		
G	TMVW-t	MT20	4.0	6.0		
H	BMV1+p	MT20	2.0	4.0		
I	BSWWW-I	MT20	5.0	8.0	3.00	4.00
J	BMWW-t	MT20	4.0	4.0		
K	BMVW1-t	MT20	4.0	4.0	2.00	1.75

NOTES- (1)

NOTE: Lateral brace(s) shown shall be 2x4 SPF #2

LICENSED PROFESSIONAL ENGINEER
07/10/2019
R. TURENNE
100157040
PROVINCE OF ONTARIO

DIMENSIONS, SUPPORTS AND LOADINGS SPECIFIED BY FABRICATOR TO BE VERIFIED BY BUILDING DESIGNER

BEARINGS

JT	FACTORED GROSS REACTION VERT	HORZ	MAXIMUM FACTORED GROSS REACTION DOWN	HORZ	UPLIFT	INPUT BRG IN-SX	REQRD BRG IN-SX
H	1230	0	1230	0	0	1-9	1-8
K	1349	0	1349	0	0	5-8	1-8

UNFACTORED REACTIONS

JT	1ST LCASE COMBINED	MAX./MIN. COMPONENT REACTIONS SNOW	LIVE	PERM.LIVE	WIND	DEAD	SOIL
H	873	554 / 0	0 / 0	0 / 0	0 / 0	319 / 0	0 / 0
K	956	620 / 0	0 / 0	0 / 0	0 / 0	336 / 0	0 / 0

BEARING MATERIAL TO BE SPF NO.2 OR BETTER AT JOINT(S) H, K

BRACING

TOP CHORD TO BE SHEATHED OR MAX. PURLIN SPACING = 6.18 FT.
MAX. UNBRACED BOTTOM CHORD LENGTH = 10.00 FT OR RIGID CEILING DIRECTLY APPLIED.

ALL PITCH BREAKS AND PERIMETER CORNER JOINTS MUST BE LATERALLY RESTRAINED.

1 LATERAL BRACE(S) AT 1/ 2 LENGTH OF G-H, D-I, E-I, G-I, C-K.

END VERTICAL(S) MUST BE SHEATHED OR HAVE BRACES AS INDICATED IN THE MAX. UNBRACED LENGTH COLUMN OF THE TABLE BELOW

LOADING

TOTAL LOAD CASES: (4)

CHORDS

MEMB. FR-TO	MAX. FACTORED FORCE (LBS)	FACTORED VERT. LOAD LC1 (PLF) FROM	TO	MAX CSI (LC)	MAX. UNBRAC LENGTH
A- B	0 / 48	-84.9	-84.9	0.12 (1)	10.00
B- C	0 / 23	-84.9	-84.9	0.13 (1)	10.00
C- D	-962 / 0	-84.9	-84.9	0.14 (1)	6.18
D- E	-743 / 0	-84.9	-84.9	0.55 (1)	6.25
E- F	-743 / 0	-84.9	-84.9	0.55 (1)	6.25
F- G	-743 / 0	-84.9	-84.9	0.55 (1)	6.25
H- G	-1148 / 0	0.0	0.0	0.63 (1)	5.94
K- B	-219 / 0	0.0	0.0	0.03 (1)	7.81
K- J	0 / 553	-18.5	-18.5	0.36 (4)	10.00
J- I	0 / 564	-18.5	-18.5	0.37 (4)	10.00
I- H	0 / 0	-18.5	-18.5	0.43 (4)	10.00

WEBS

MEMB. FR-TO	MAX. FACTORED FORCE (LBS)	MAX CSI (LC)
C- J	0 / 41	0.01 (4)
J- D	0 / 160	0.06 (4)
D- I	0 / 277	0.04 (1)
I- E	-924 / 0	0.71 (1)
I- G	0 / 1136	0.18 (1)
K- C	-1224 / 0	0.38 (1)

DESIGN CRITERIA

SPECIFIED LOADS:

TOP CH.	LL	=	23.3	PSF
	DL	=	6.0	PSF
BOT CH.	LL	=	0.0	PSF
	DL	=	7.4	PSF
TOTAL LOAD		=	36.7	PSF

SPACING = 24.0 IN. C/C

LOADING IN FLAT SECTION BASED ON A SLOPE OF 2.00/12 MINIMUM

THIS TRUSS IS DESIGNED FOR RESIDENTIAL OR SMALL BUILDING REQUIREMENTS OF PART 9, NBCC 2010, NBCC 2015

THIS DESIGN COMPLIES WITH:
- PART 9 OF BCBC 2018 , OBC 2012
- CSA 086-09, CSA 086-14
- TPIC 2011, TPIC 2014

(55 % OF 27.2 P.S.F. G.S.L. PLUS 8.4 P.S.F. RAIN LOAD) EQUALS 23.3 P.S.F. SPECIFIED ROOF LIVE LOAD

ALLOWABLE DEFL.(LL)= L/360 (0.79")
CALCULATED VERT. DEFL.(LL) = L/ 999 (0.03")
ALLOWABLE DEFL.(TL)= L/360 (0.79")
CALCULATED VERT. DEFL.(TL) = L/ 930 (0.31")

CSI: TC=0.63/1.00 (G-H:1) , BC=0.43/1.00 (H-I:4) , WB=0.71/1.00 (E-I:1) , SSI=0.28/1.00 (E-G:1)

DOL LUMBER=1.00 NAIL=1.00 LS BEND=1.10 COMP=1.10 SHEAR=1.10 TENS= 1.10

COMPANION LIVE LOAD FACTOR = 1.00

TRUSS PLATE MANUFACTURER IS NOT RESPONSIBLE FOR QUALITY CONTROL IN THE TRUSS MANUFACTURING PLANT .

NAIL VALUES

PLATE	GRIP(DRY) (PSI) MAX	MIN	SHEAR (PLI) MAX	MIN	SECTION (PLI) MAX	MIN
MT20	618	354	1667	788	1987	1656

PLATE PLACEMENT TOL. = 0.250 Inches

PLATE ROTATION TOL. = 5.0 Deg.

JSI GRIP= 0.87 (K) (INPUT = 0.90)
JSI METAL= 0.45 (C) (INPUT = 1.00)

JOB NAME	TRUSS NAME	QUANTITY	PLY	JOB DESC.	DRWG NO.
310397	H6		1	TRUSS DESC. JT-39002	E-19072392

Alpa Roof Truss, Maple

Version 8.300 S May 10 2019 MiTek Industries, Inc. Thu Jul 11 13:23:41 2019 Page 1
ID:kx9I86OLlWqKxBYZIGBjHpysKNA-B7cAvJELCMLX9jT?v0R4SE_2p7Yo2PUNgmlgKpyz8JW
Scale = 1:67.2

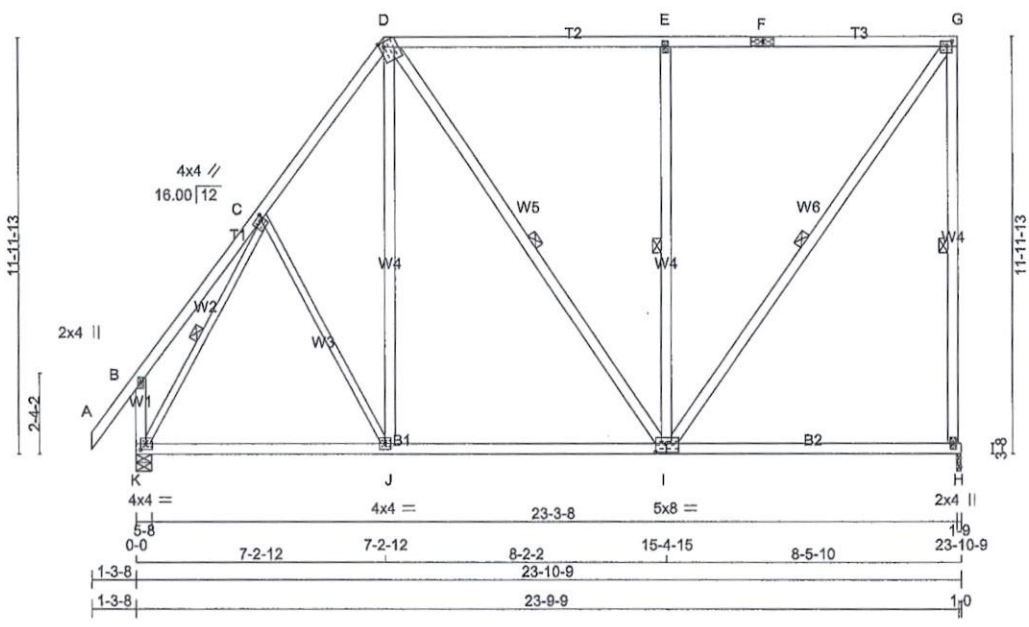

TOTAL WEIGHT = 13 X 148 = 1918 lb

LUMBER
N. L. G. A. RULES

CHORDS	SIZE		LUMBER	DESCR.
A - D	2x4	DRY	No.2	SPF
D - F	2x4	DRY	1650F 1.5E	SPF
F - G	2x4	DRY	1650F 1.5E	SPF
H - G	2x4	DRY	No.2	SPF
K - B	2x4	DRY	No.2	SPF
K - I	2x4	DRY	No.2	SPF
I - H	2x4	DRY	No.2	SPF
ALL WEBS EXCEPT	2x4	DRY	No.2	SPF
C - J	2x3	DRY	No.2	SPF
K - C	2x3	DRY	No.2	SPF

DRY: SEASONED LUMBER.

PLATES (table is in inches)

JT	TYPE	PLATES	W	LEN	Y	X
B	TMV+p	MT20	2.0	4.0		
C	TMWW-t	MT20	4.0	4.0	1.50	1.00
D	TTWW+m	MT20	6.0	7.0	Edge	1.50
E	TMW+w	MT20	2.0	4.0		
F	TS-t	MT20	3.0	8.0		
G	TMVW-t	MT20	4.0	4.0	1.75	1.75
H	BMV1+p	MT20	2.0	4.0		
I	BSWWW-i	MT20	5.0	8.0	3.00	3.75
J	BMWW-t	MT20	4.0	4.0		
K	BMVW1-t	MT20	4.0	4.0	2.00	1.75

Edge - INDICATES REFERENCE CORNER OF PLATE TOUCHES EDGE OF CHORD.

NOTES- (1)

NOTE: Lateral brace(s) shown shall be 2x4 SPF #2

LICENSED PROFESSIONAL ENGINEER
07/11/2019
R. TURENNE
100157040
PROVINCE OF ONTARIO

DIMENSIONS, SUPPORTS AND LOADINGS SPECIFIED BY FABRICATOR TO BE VERIFIED BY BUILDING DESIGNER

BEARINGS

JT	FACTORED GROSS REACTION VERT	HORZ	MAXIMUM FACTORED GROSS REACTION DOWN	HORZ	UPLIFT	INPUT BRG IN-SX	REQRD BRG IN-SX
H	1311	0	1311	0	0	1-9	1-8
K	1393	0	1393	0	0	5-8	1-8

UNFACTORED REACTIONS

JT	1ST LCASE COMBINED	MAX./MIN. COMPONENT REACTIONS SNOW	LIVE	PERM.LIVE	WIND	DEAD	SOIL
H	938	554 / 0	0 / 0	0 / 0	0 / 0	384 / 0	0 / 0
K	990	620 / 0	0 / 0	0 / 0	0 / 0	370 / 0	0 / 0

BEARING MATERIAL TO BE SPF NO.2 OR BETTER AT JOINT(S) H, K

BRACING
FOR SECTION D-G, MAX. PURLIN SPACING = 2.00 FT.
FOR OTHER SECTIONS, TOP CHORD TO BE SHEATHED OR MAX. PURLIN SPACING = 6.13 FT.
MAX. UNBRACED BOTTOM CHORD LENGTH = 10.00 FT OR RIGID CEILING DIRECTLY APPLIED.

ALL PITCH BREAKS AND PERIMETER CORNER JOINTS MUST BE LATERALLY RESTRAINED.

1 LATERAL BRACE(S) AT 1/ 2 LENGTH OF G-H, D-I, E-I, G-I, C-K.

END VERTICAL(S) MUST BE SHEATHED OR HAVE BRACES AS INDICATED IN THE MAX. UNBRACED LENGTH COLUMN OF THE TABLE BELOW

LOADING
TOTAL LOAD CASES: (4)

CHORDS

MEMB. FR-TO	MAX. FACTORED FORCE (LBS)	FACTORED VERT. LOAD LC1 (PLF) FROM	TO	MAX CSI (LC)	MAX. UNBRAC LENGTH
A- B	0 / 48	-84.9	-84.9	0.12 (1)	10.00
B- C	0 / 29	-84.9	-84.9	0.18 (1)	10.00
C- D	-981 / 0	-84.9	-84.9	0.15 (1)	6.13
D- E	-673 / 0	-92.4	-92.4	0.71 (1)	2.00
E- F	-674 / 0	-92.4	-92.4	0.72 (1)	2.00
F- G	-674 / 0	-92.4	-92.4	0.72 (1)	2.00
H- G	-1233 / 0	0.0	0.0	0.97 (1)	5.78
K- B	-234 / 0	0.0	0.0	0.03 (1)	7.81
K- J	0 / 588	-18.5	-18.5	0.37 (4)	10.00
J- I	0 / 571	-18.5	-18.5	0.38 (4)	10.00
I- H	0 / 0	-18.5	-18.5	0.38 (4)	10.00

WEBS

MEMB. FR-TO	MAX. FACTORED FORCE (LBS)	MAX CSI (LC)
C- J	-39 / 30	0.05 (1)
J- D	0 / 211	0.04 (4)
D- I	0 / 179	0.03 (1)
I- E	-950 / 0	0.75 (1)
I- G	0 / 1156	0.19 (1)
K- C	-1254 / 0	0.49 (1)

[M][F]

DESIGN CRITERIA

SPECIFIED LOADS:

TOP CH.	LL =	23.3	PSF
	DL =	6.0	PSF
BOT CH.	LL =	0.0	PSF
	DL =	7.4	PSF
TOTAL LOAD	=	36.7	PSF

SPACING = 24.0 IN. C/C

LOADING IN FLAT SECTION BASED ON PIGGYBACK TRUSS WITH SLOPES OF 6.00/12 AND -6.00/12 AND RESPECTIVE WALL HEIGHTS OF 0-0 AND 0-0 AND AN ADDITIONAL DEAD LOAD OF 3.0 P.S.F.

THIS TRUSS IS DESIGNED FOR RESIDENTIAL OR SMALL BUILDING REQUIREMENTS OF PART 9, NBCC 2010, NBCC 2015

THIS DESIGN COMPLIES WITH:
- PART 9 OF BCBC 2018 , OBC 2012
- CSA 086-09, CSA 086-14
- TPIC 2011, TPIC 2014

(55 % OF 27.2 P.S.F. G.S.L. PLUS 8.4 P.S.F. RAIN LOAD) EQUALS 23.3 P.S.F. SPECIFIED ROOF LIVE LOAD

ALLOWABLE DEFL.(LL)= L/360 (0.79")
CALCULATED VERT. DEFL.(LL) = L/ 999 (0.03")
ALLOWABLE DEFL.(TL)= L/360 (0.79")
CALCULATED VERT. DEFL.(TL) = L/ 999 (0.25")

CSI: TC=0.97/1.00 (G-H:1) , BC=0.38/1.00 (H-I:4) , WB=0.75/1.00 (E-I:1) , SSI=0.38/1.00 (E-G:1)

DOL LUMBER=1.00 NAIL=1.00 LS BEND=1.10 COMP=1.10 SHEAR=1.10 TENS= 1.10

COMPANION LIVE LOAD FACTOR = 1.00

TRUSS PLATE MANUFACTURER IS NOT RESPONSIBLE FOR QUALITY CONTROL IN THE TRUSS MANUFACTURING PLANT .

NAIL VALUES

PLATE	GRIP(DRY) (PSI) MAX	MIN	SHEAR (PLI) MAX	MIN	SECTION (PLI) MAX	MIN
MT20	618	354	1667	788	1987	1656

PLATE PLACEMENT TOL. = 0.250 Inches

PLATE ROTATION TOL. = 5.0 Deg.

JSI GRIP= 0.90 (I) (INPUT = 0.90)
JSI METAL= 0.47 (C) (INPUT = 1.00)

JOB NAME	TRUSS NAME	QUANTITY	PLY	JOB DESC.		DRWG NO.
310397	H7		1	TRUSS DESC.	JT-39002	E-19072393

Alpa Roof Truss, Maple

Version 8.300 S May 10 2019 MiTek Industries, Inc. Thu Jul 11 13:23:42 2019 Page 1
ID:kx9I86OLIWqKxBYZIGBjHpysKNA-fJAY6fFzzgTOns1BSkyJ?RWF0Xupn0aXvQUDsGyz8JV
Scale = 1:29.9

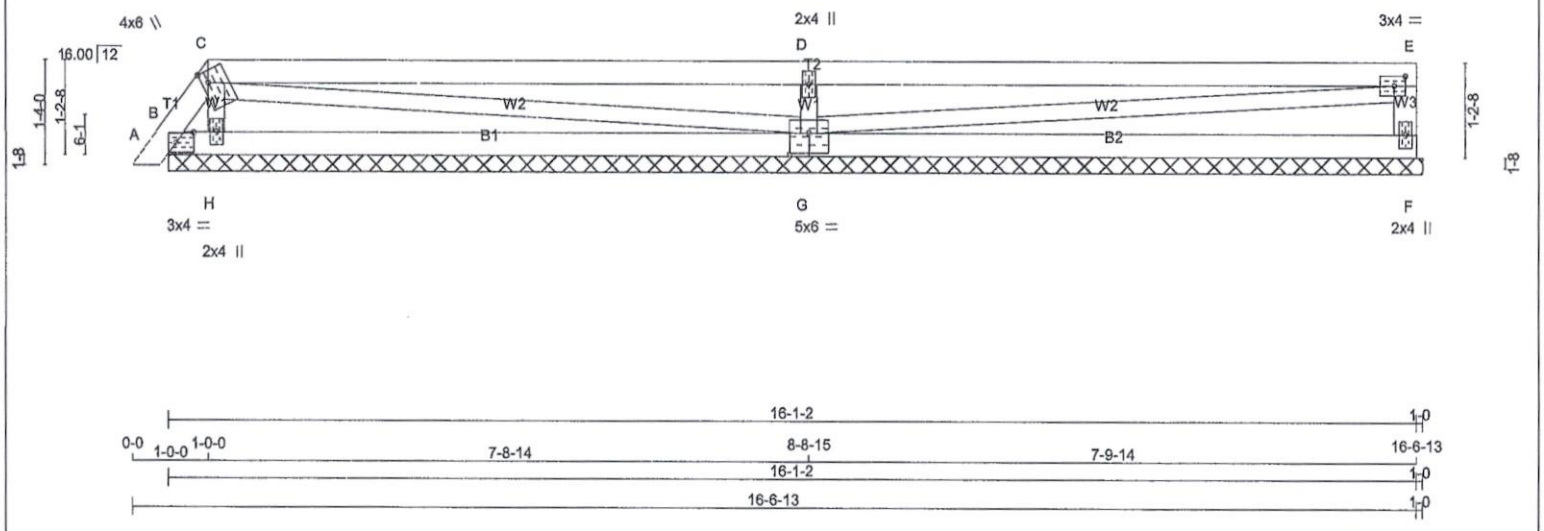

TOTAL WEIGHT = 4 X 52 = 207 lb [M]

LUMBER
N. L. G. A. RULES

CHORDS	SIZE		LUMBER	DESCR.
A - C	2x4	DRY	No.2	SPF
C - E	2x4	DRY	No.2	SPF
F - E	2x4	DRY	No.2	SPF
B - G	2x4	DRY	No.2	SPF
G - F	2x4	DRY	No.2	SPF
ALL WEBS	2x3	DRY	No.2	SPF

DRY: SEASONED LUMBER.

PLATES (table is in inches)

JT	TYPE	PLATES	W	LEN	Y	X
B	TMB1-I	MT20	3.0	4.0	1.50	2.75
C	TTWW+m	MT20	4.0	6.0	1.75	1.00
D	TMW+w	MT20	2.0	4.0		
E	TMVW-t	MT20	3.0	4.0	1.50	1.75
F	BMV1+p	MT20	2.0	4.0		
G	BSWWW1-I	MT20	5.0	6.0	3.00	3.00
H	BMW1+w	MT20	2.0	4.0		

NOTES- (1)

NOTE: Lateral brace(s) shown shall be 2x4 SPF #2

DIMENSIONS, SUPPORTS AND LOADINGS SPECIFIED BY FABRICATOR TO BE VERIFIED BY BUILDING DESIGNER

BEARINGS

JT	FACTORED GROSS REACTION VERT	HORZ	MAXIMUM FACTORED GROSS REACTION DOWN	HORZ	UPLIFT	INPUT BRG IN-SX	REQRD BRG IN-SX
F	323	0	323	0	0	16-2-2 (16-1-2)	9-1
B	-76	0	0	0	-192	16-2-2 (16-1-2)	9-1
H	494	0	494	0	0	16-2-2 (16-1-2)	9-1
G	953	0	953	0	0	16-2-2 (16-1-2)	9-1

VALUE IN PARENTHESIS INDICATES EFFECTIVE BEARING LENGTH

PROVIDE ANCHORAGE AT BEARING JOINT B FOR 192 LBS FACTORED UPLIFT

UNFACTORED REACTIONS

JT	1ST LCASE COMBINED	MAX./MIN. COMPONENT REACTIONS SNOW	LIVE	PERM.LIVE	WIND	DEAD	SOIL
F	231	137 / 0	0 / 0	0 / 0	0 / 0	93 / 0	0 / 0
B	-74	64 / 0	0 / 0	0 / 0	0 / 0	0 / -137	0 / 0
H	373	111 / 0	0 / 0	0 / 0	0 / 0	261 / 0	0 / 0
G	672	454 / 0	0 / 0	0 / 0	0 / 0	218 / 0	0 / 0

BEARING MATERIAL TO BE SPF NO.2 OR BETTER AT JOINT(S) F, B, H, G

BRACING
TOP CHORD TO BE SHEATHED OR MAX. PURLIN SPACING = 6.25 FT.
MAX. UNBRACED BOTTOM CHORD LENGTH = 10.00 FT OR RIGID CEILING DIRECTLY APPLIED.

ALL PITCH BREAKS AND PERIMETER CORNER JOINTS MUST BE LATERALLY RESTRAINED.

LOADING
TOTAL LOAD CASES: (4)

CHORDS

MEMB. FR-TO	MAX. FACTORED FORCE (LBS)	FACTORED VERT. LOAD LC1 (PLF) FROM	TO	MAX CSI (LC)	MAX. UNBRAC LENGTH
A- B	0 / 11	-84.9	-84.9	0.01 (1)	10.00
B- C	-74 / 0	-84.9	-84.9	0.00 (1)	6.25
C- D	-2 / 0	-84.9	-84.9	0.87 (1)	10.00
D- E	-3 / 0	-84.9	-84.9	0.87 (1)	10.00
F- E	-250 / 0	0.0	0.0	0.03 (1)	7.81
B- H	0 / 39	-18.5	-18.5	0.29 (4)	10.00
H- G	0 / 14	-18.5	-18.5	0.29 (4)	10.00
G- F	0 / 0	-18.5	-18.5	0.33 (4)	10.00

WEBS

MEMB. FR-TO	MAX. FACTORED FORCE (LBS)	MAX CSI (LC)
H- C	-205 / 0	0.03 (1)
C- G	-11 / 0	0.01 (1)
G- D	-826 / 0	0.12 (1)
G- E	0 / 3	0.00 (1)

DESIGN CRITERIA

SPECIFIED LOADS:

TOP CH.	LL	=	23.3	PSF
	DL	=	6.0	PSF
BOT CH.	LL	=	0.0	PSF
	DL	=	7.4	PSF
TOTAL LOAD		=	36.7	PSF

SPACING = 24.0 IN. C/C

LOADING IN FLAT SECTION BASED ON A SLOPE OF 2.00/12 MINIMUM

THIS TRUSS IS DESIGNED FOR RESIDENTIAL OR SMALL BUILDING REQUIREMENTS OF PART 9, NBCC 2010, NBCC 2015

THIS DESIGN COMPLIES WITH:
- PART 9 OF BCBC 2018 , OBC 2012
- CSA 086-09, CSA 086-14
- TPIC 2011, TPIC 2014

(55 % OF 27.2 P.S.F. G.S.L. PLUS 8.4 P.S.F. RAIN LOAD) EQUALS 23.3 P.S.F. SPECIFIED ROOF LIVE LOAD

CSI: TC=0.87/1.00 (D-E:1) , BC=0.33/1.00 (F-G:4) , WB=0.12/1.00 (D-G:1) , SSI=0.32/1.00 (D-E:1)

DOL LUMBER=1.00 NAIL=1.00 LS BEND=1.10 COMP=1.10 SHEAR=1.10 TENS= 1.10

COMPANION LIVE LOAD FACTOR = 1.00

TRUSS PLATE MANUFACTURER IS NOT RESPONSIBLE FOR QUALITY CONTROL IN THE TRUSS MANUFACTURING PLANT .

NAIL VALUES

PLATE	GRIP(DRY) (PSI) MAX	MIN	SHEAR (PLI) MAX	MIN	SECTION (PLI) MAX	MIN
MT20	618	354	1667	788	1987	1656

PLATE PLACEMENT TOL. = 0.250 Inches

PLATE ROTATION TOL. = 5.0 Deg.

JSI GRIP= 0.78 (C) (INPUT = 0.90)
JSI METAL= 0.41 (G) (INPUT = 1.00)

May 27, 2019

Re: Expiration Date for Technical Bulletins Extended to 12/31/2019

Please be advised that the expiration date of the Technical Bulletins listed below has been extended until December 31, 2019.

T-SPECCP17	T-SPECH17	T-SPECDSHGUS17R
T-SPECHGUS17-R	T-SPECHHUS17-R	T-SPECHUS17
T-SPECLF17	T-SPECLT17	T-SPECLU17
T-SPECCLUL17	T-SPECLUS17	T-SPECSUR17
T-SPECTBE17	T-SPECTC17	T-SPECTHGB17
T-SPECTHGBHV17	T-SPECTHGQ17	T-SPECTHGW17
T-SPECLSULSSU17	T-SPECHTHGQ17	T-SPECSTHGQ17

Should you have any questions or concerns regarding the above, please contact me at your convenience.

Sincerely,

Brent Bunting, P.Eng.
Simpson Strong-Tie Canada, Ltd.

LICENSED PROFESSIONAL ENGINEER
5/28/2019
B. D. BUNTING
PROVINCE OF ONTARIO

LUS – Double Shear Joist Hangers

SIMPSON Strong-Tie®

All LUS hangers have double shear nailing. This patented innovation distributes the load through two points on each joist nail for greater strength. It also allows the use of fewer nails, faster installation and the use of common nails for all connections.

Material: 18 gauge

Finish: G90 galvanized

Design:

- Factored resistances are in accordance with CSA O86-14.
- Uplift resistances have been increased 15%. No further increase is permitted.
- Wood shear is not considered in the factored resistances given. The specifier must ensure that the joist and header capacities are capable of withstanding these loads.

Installation:

- Use all specified fasteners.
- Nails: 16d = 0.162" dia. x 3½" long common wire, 10d = 0.148" x 3" long common wire.
- Double shear nails must be driven at an angle through the joist or truss into the header to achieve the table loads.
- Not designed for welded or nailer applications.

Options:

- These hangers cannot be modified

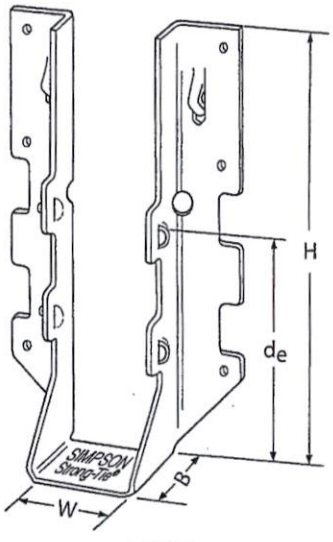

LUS28

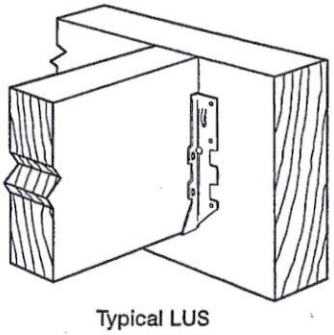

Typical LUS Installation

Model No.	Ga.	Dimensions (in.)				Fasteners		Factored Resistance (lb.)			
								D.Fir-L		S-P-F	
		W	H	B	d_e[1]	Face	Joist	Uplift (K_D=1.15)	Normal (K_D=1.00)	Uplift (K_D=1.15)	Normal (K_D=1.00)
LUS24	18	1 9/16	3 1/8	1 3/4	1 15/16	(4) 10d	(2) 10d	710	1630	645	1155
LUS24-2	18	3 1/8	3 1/8	2	1 13/16	(4) 16d	(2) 16d	835	2020	590	1435
LUS26	18	1 9/16	4 3/4	1 3/4	3 5/8	(4) 10d	(4) 10d	1420	2170	1290	1630
LUS26-2	18	3 1/8	4 7/8	2	4	(4) 16d	(4) 16d	1720	2595	1545	1920
LUS26-3	18	4 5/8	4 3/16	2	3 1/4	(4) 16d	(4) 16d	1720	2595	1545	2340
LUS28	18	1 9/16	6 5/8	1 3/4	3 3/4	(6) 10d	(6) 10d	1420	2520	1290	1790
LUS28-2	18	3 1/8	7	2	4	(6) 16d	(4) 16d	1720	3325	1545	2575
LUS28-3	18	4 5/8	6 1/4	2	3 1/4	(6) 16d	(4) 16d	1720	3325	1545	2375
LUS210	18	1 9/16	7 13/16	1 3/4	3 7/8	(8) 10d	(4) 10d	1420	2785	1290	2210
LUS210-2	18	3 1/8	9	2	6	(8) 16d	(6) 16d	2580	4500	2320	3195
LUS210-3	18	4 5/8	8 3/16	2	5 1/4	(8) 16d	(6) 16d	2580	3345	2320	2375

1. d_e is the distance from the seat of the hanger to the highest joist nail.

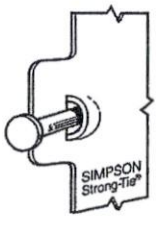

Dome Double Shear Nailing prevents tabs breaking off (available on some models).

U.S. Patent 5,603,580

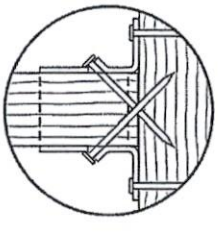

Double Shear Nailing Top View.

LICENSED PROFESSIONAL ENGINEER
4/5/2017
B. D. BUNTING
PROVINCE OF ONTARIO

LIMIT STATES DESIGN

This technical bulletin is effective until June 30, 2019, and reflects information available as of March 1, 2017. This information is updated periodically and should not be relied upon after June 30, 2019. Contact Simpson Strong-Tie for current information and limited warranty or see strongtie.com.

© 2017 Simpson Strong-Tie Company Inc.

(800) 999-5099
strongtie.com

HHUS – Double Shear Joist Hangers

SIMPSON Strong-Tie®

All HHUS hangers have double shear nailing. This patented innovation distributes the load through two points on each joist nail for greater strength. It also allows the use of fewer nails, faster installation and the use of common nails for all connections. Do not bend or remove tabs.

Material: 14 gauge

Finish: G90 galvanized

Design:

- Factored resistances are in accordance with CSA O86-14.
- Uplift resistances have been increased 15%. No further increase is permitted.
- Wood shear is not considered in the factored resistances given. The specifier must ensure that the joist and header capacities are capable of withstanding these loads.

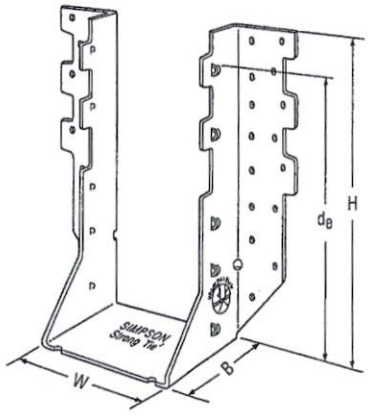

HHUS410

Installation:

- Use all specified fasteners
- Nails: 16d = 0.162" dia. x 3½" long common wire
- Double shear nails must be driven at an angle through the joist or truss into the header to achieve the table loads
- Not designed for welded or nailer applications

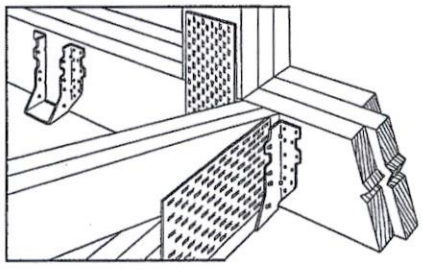

Typical HHUS Installation (Truss Designer to provide fastener quantity for connecting multiple members together)

Options:

- See current catalogue for options

Model No.	Ga.	Dimensions (in.)				Fasteners		Factored Resistance (lb.)			
								D.Fir-L		S-P-F	
		W	H	B	d_e[1]	Face	Joist	Uplift (K_D=1.15)	Normal (K_D=1.00)	Uplift (K_D=1.15)	Normal (K_D=1.00)
HHUS26-2	14	3 5/16	5 13/16	3	3 15/16	(14) 16d	(6) 16d	2850	7335	2065	5205
HHUS28-2	14	3 5/16	7 7/32	3	6 5/32	(22) 16d	(8) 16d	3765	8940	2675	6345
HHUS210-2	14	3 5/16	9 3/32	3	8	(30) 16d	(10) 16d	4745	9660	4310	7000
HHUS210-3	14	4 11/16	9	3	7 15/16	(30) 16d	(10) 16d	4745	10545	4310	7485
HHUS210-4	14	6 1/8	8 29/32	3	7 27/32	(30) 16d	(10) 16d	4745	10545	4310	7485
HHUS46	14	3 5/8	5 13/32	3	3 15/16	(14) 16d	(6) 16d	2540	7335	2065	5205
HHUS48	14	3 5/8	7 1/8	3	6 1/8	(22) 16d	(8) 16d	3765	8945	2267	6345
HHUS410	14	3 5/8	9	3	8	(30) 16d	(10) 16d	4745	9855	4310	7000
HHUS5.50/10	14	5 1/2	9	3	8	(30) 16d	(10) 16d	4745	10545	4310	7485
HHUS7.25/10	14	7 1/4	9	3 5/16	7 29/32	(30) 16d	(10) 16d	4745	10770	4310	7650

1. d_e is the distance from the seat of the hanger to the highest joist nail.

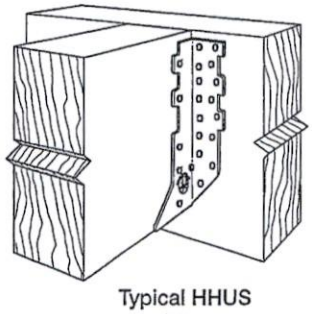

Typical HHUS Installation

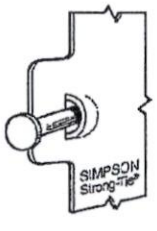

Dome Double Shear Nailing prevents tabs breaking off (available on some models).

U.S. Patent 5,603,580

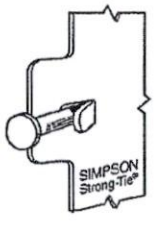

Double Shear Nailing Side View. Do not bend tab back.

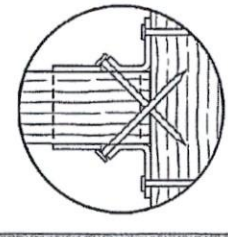

Double Shear Nailing Top View.

LIMIT STATES DESIGN

This technical bulletin is effective until June 30, 2019, and reflects information available as of March 1, 2017. This information is updated periodically and should not be relied upon after June 30, 2019. Contact Simpson Strong-Tie for current information and limited warranty or see strongtie.com.

© 2017 Simpson Strong-Tie Company Inc.

(800) 999-5099
strongtie.com

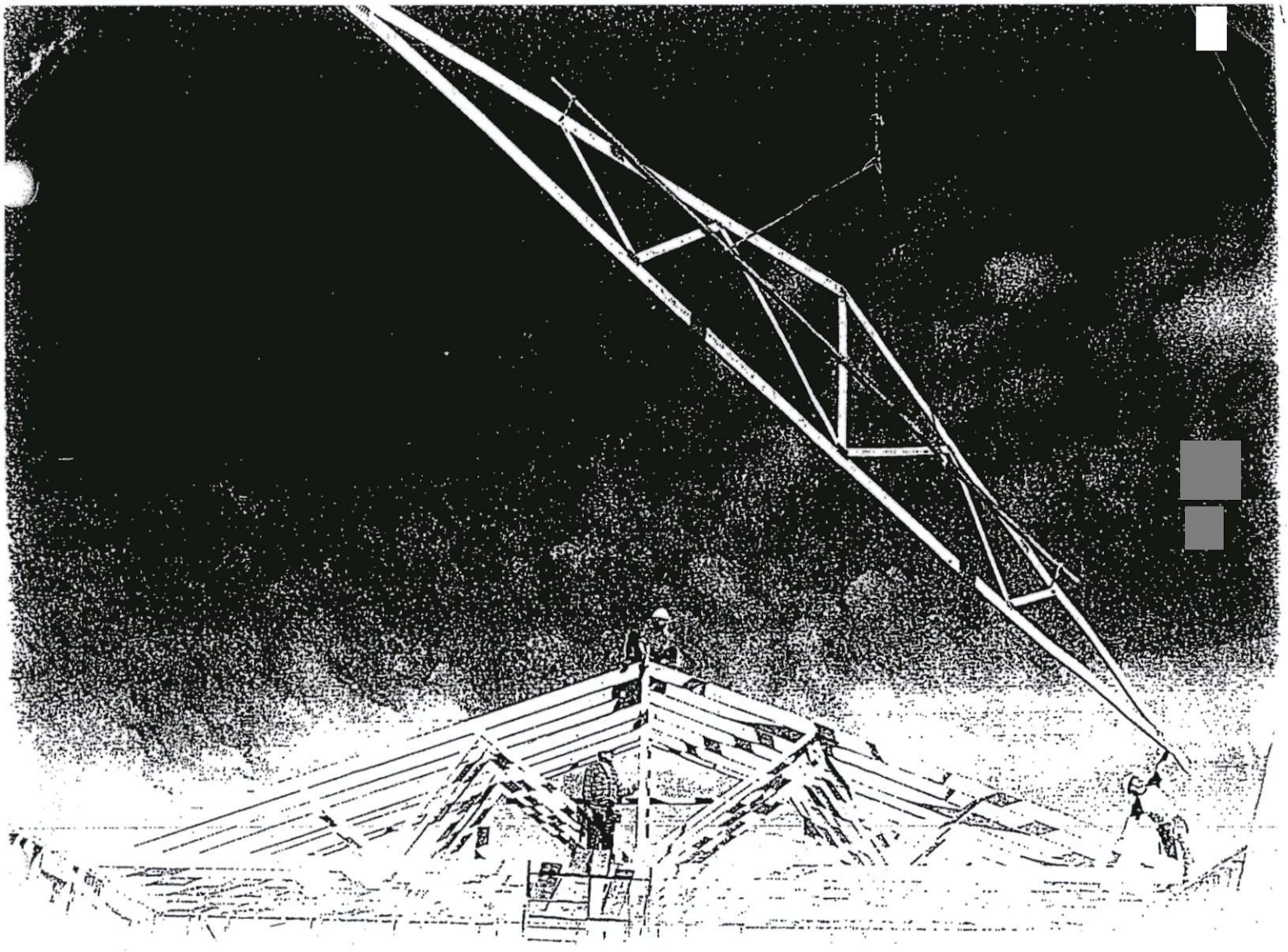

Wood Truss Installation

A Guide to proper handling, erecting and bracing metal plate connected wood trusses

Table of Content

Warning.....4

1 Unloading & Lifting.....5

2 Job Site Handling.....5

3 Hoisting.....6

4 Beginning the Erection Process.....7

5 Erection Tolerance.....8

6 Bracing.....8

7 Bracing Requirements for 3 Planes of Roof.....9

8 Stacking Materials.....10

Caution Notes.....11

Warning

General

Familiarity with the **Construction Design Documents**, the **Truss Design Drawings**, and **Truss Placement Plans** (if required by the **Construction Design Documents**) is required to properly erect, brace, and connect the trusses to the building system.

All of the care and quality involved in the design and manufacture of wood trusses can be jeopardized if the trusses are not properly handled, erected, and braced.

The consequences of improper handling, erecting, and bracing may be a collapse of the structure, which at best is a substantial loss of time and materials, and at worst is a loss of life. The majority of truss accidents occur during truss installation and not as a result of improper design or manufacture.

Prior to truss erection, the builder/erector shall meet with the erection crew for a safety and planning meeting, making sure each crew member understands his or her roles and responsibilities during the erection process.

Temporary Erection Bracing

Trusses are not marked in any way to identify the frequency, or location of temporary erection bracing.

All temporary bracing shall comply with the latest edition of *Commentary and Recommendations for Handling, Installing & Bracing Metal Plate Connected Wood Trusses* (HIB), published by the Truss Plate Institute, and/or as specified in the **Construction Design Documents** prepared by the building designer.

Permanent Truss Bracing

Permanent bracing for the roof or floor trusses is the responsibility of the building designer and should be shown on the **Construction Design Documents**. Permanent bracing locations for individual compression members of a wood truss are shown on the **Truss Design Drawings**, and shall be installed by the building or erection contractor. This bracing is needed for the proper performance of individual trusses within the roof or floor system. The design and connection of the bracing to the truss and then to the overall building system is the responsibility of the building designer, and is in addition to the permanent bracing plan, which is also specified by the building designer.

Special Design Requirements

Special design requirements, such as wind bracing, portal bracing, seismic bracing, diaphragms, shear walls, or other load transfer elements and their connections to wood trusses must be considered separately by the building designer, who shall determine size, location, and method of connections for all bracing as needed to resist these forces.

1 Unloading & Lifting

Never handle trusses flat

Beginning with the unloading process, and throughout all phases of construction, care must be taken to avoid **lateral bending** of trusses, which can cause damage to the lumber and metal connector plates at the joints.

Avoid lateral bending

- **Use special care in windy weather.**
- **If using a crane within 10 feet of an electric line, contact the local power company.**
- **If using a crane within 5 miles of an airport, contact the airport 30 days prior to erection to learn about any safety regulations that must be followed.**

2 Job Site Handling

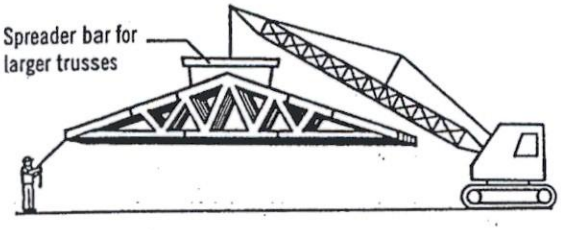

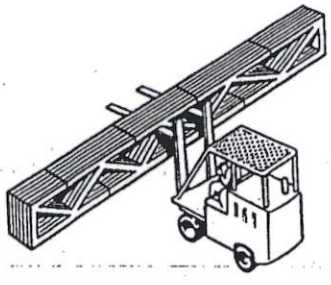

All trusses should be picked up at the top chords in a vertical position only

Proper banding and smooth ground allow for unloading of trusses without damage. This should be done as close to the building site as possible to minimize handling. **Do not** break banding until installation begins. Hand erection of trusses is allowed, provided excessive lateral bending is prevented.

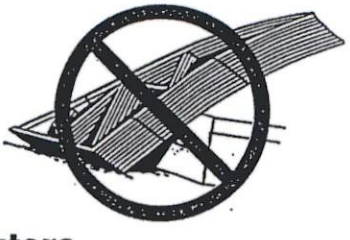

Do not store unbraced bundles upright

If trusses are stored vertically they shall be braced in a manner that will prevent tipping or topping. Generally cuting of the banding is done just prior to installation.

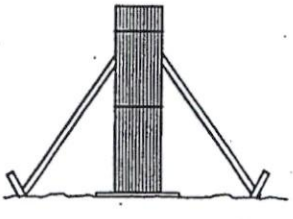

Do not store on uneven ground

If trusses are stored horizontally, blocking should be used on eight to ten foot centers, or as required, to minimize lateral bending and moisture gain.

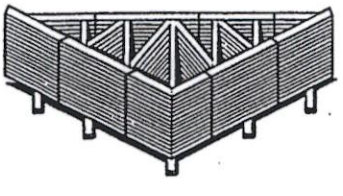

Care should be exercised when removing banding to avoid damaging trusses.

During long term storage, trusses shall be protected from the environment in a manner that provides for adequate ventilation of the trusses. If tarpaulins or other material is used, the ends shall be left open for ventilation. Plastic is not recommended, since it can trap moisture.

3 Hoisting

All trusses that are erected one at a time shall be held safely in position by the erection equipment until such time as all necessary bracing has been installed and the ends of the trusses are securely fastened to the building.

Avoid lateral bending

L ≤ 30'

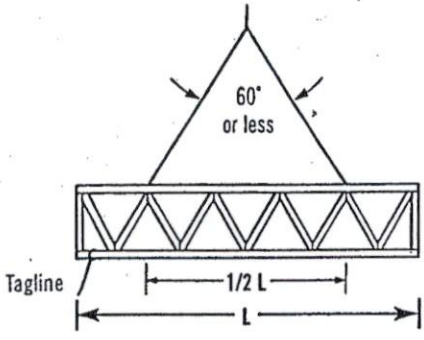

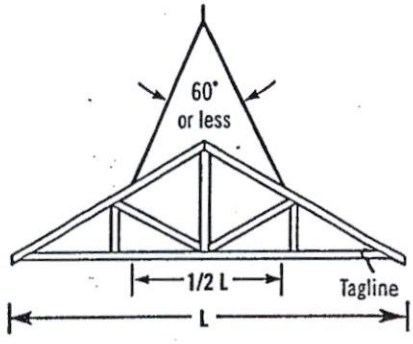

Truss sling is acceptable where these criteria are met.

30' < L ≤ 60'

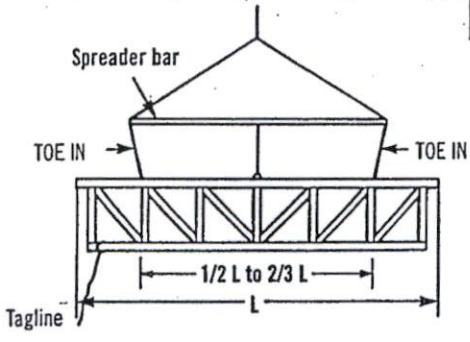

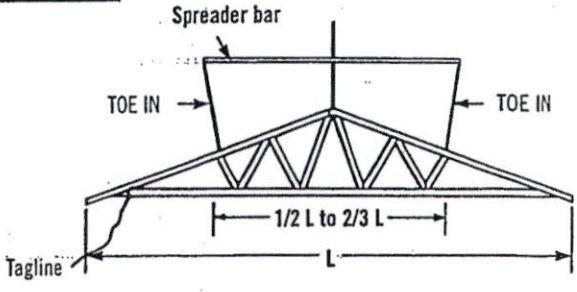

Use spreader bar in all other cases. It should be noted that the lines from the ends of the spreader bar **"TOE IN"**; if these lines should **"TOE OUT"** the truss may fold in half.

L > 60'

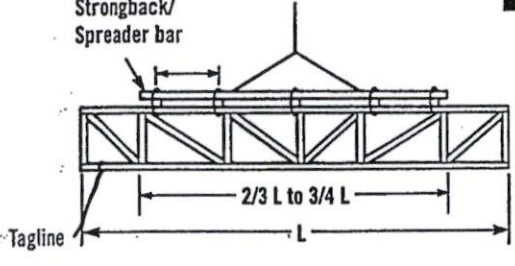

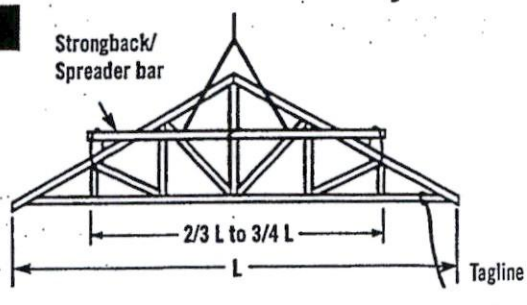

For lifting trusses with spans in excess of 60 feet, it is recommended that a strongback/spreader bar be used as illustrated. The strongback/spreader bar should be attached to the top chord and web members at intervals of approximately 10 feet. Further, the strongback/spreader bar should be at or above the mid-height of the truss to prevent overturning. The strongback/spreader bar can be of any material with sufficient strength to safely carry the weight of the truss and sufficient rigidity to adequately resist bending of the truss.

4 Beginning the Erection Process

It is important for the builder or erection contractor to provide substantial bracing for the first truss erected. The two or more trusses making up the rest of the first set are tied to and rely upon the first truss for stability. Likewise, after this first set of trusses is adequately cross-braced, the remaining trusses installed rely upon this first set for stability. Thus, the performance of the truss bracing system depends to a great extent on how well the first group of trusses is braced.

Ground Brace – Exterior

One satisfactory method ties the first unit of trusses off to a series of braces that are attached to a stake driven into the ground and securely anchored. The ground brace itself should be supported as shown below or it is apt to buckle. Additional ground braces in the opposite direction, inside the building, are also recommended.

Ground Brace – Interior

Another satisfactory method where height of building or ground conditions prohibit bracing from the exterior is to tie the first truss rigidly in place from the interior at the floor level, provided the floor is substantially completed and capable of supporting the ground bracing forces. Securely fasten the first truss to the middle of the building. Brace the bracing similar to exterior ground bracing shown at left. Set trusses from the middle toward the end of the building. Properly cross-brace the first set of trusses before removing floor braces and setting remaining trusses.

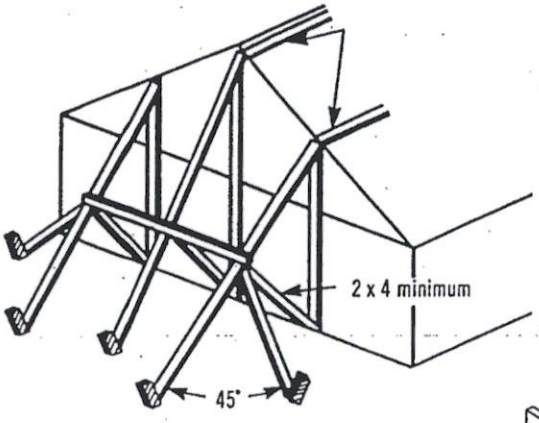

Note: Locate ground braces for first truss directly in line with all rows of top chord continuous lateral bracing (either temporary or permanent).

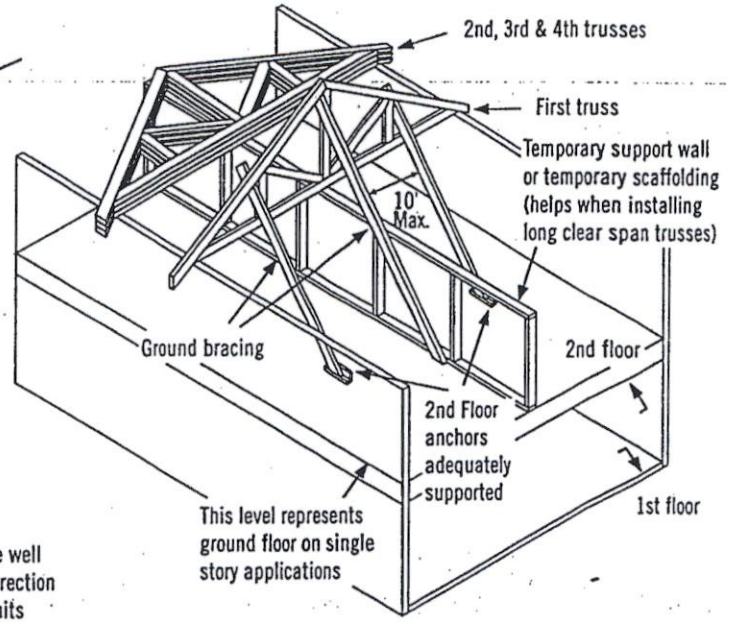

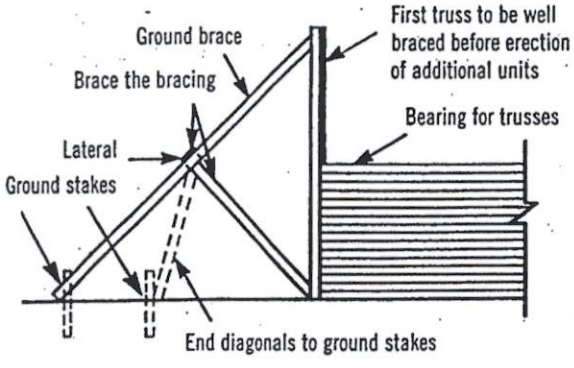

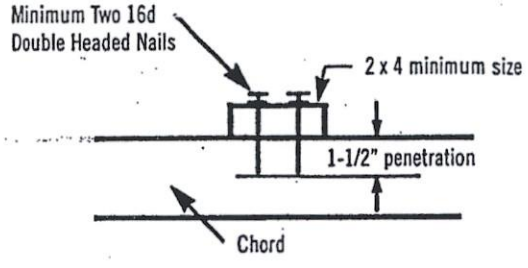

Inadequate size of bracing material or inadequate fastening is a major cause of erection dominoing.

5 Erection Tolerance

Complying with erection tolerances is critical to achieving an acceptable roof or floor line, and to accomplishing effective bracing. Setting trusses within tolerance the first time will prevent the need for the hazardous practice of respacing or adjusting trusses when roof sheathing or roof purlins are installed. Trusses leaning or bowing can cause nails to miss the top chords when sheathing is applied, and create cumulative stresses on the bracing, which is a frequent cause of dominoing.

When sheathing, make sure nails are driven into the top chord of the trusses.

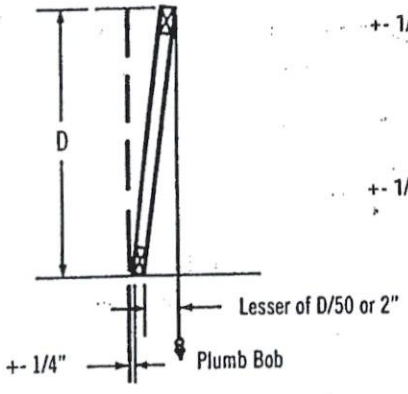

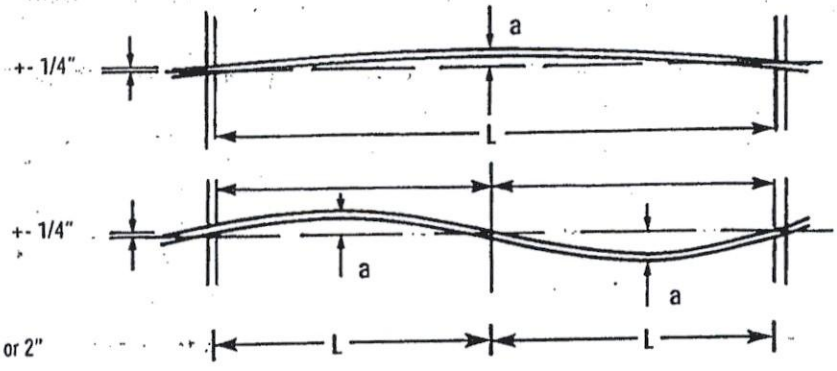

L = 16' to 32', a = 1"
L = 32' & over, a = 2"

6 Bracing

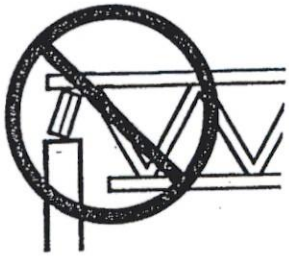

Do not install trusses on temporarily connected supports

Do not walk on unbraced trusses

Do not walk on trusses or gable ends lying flat

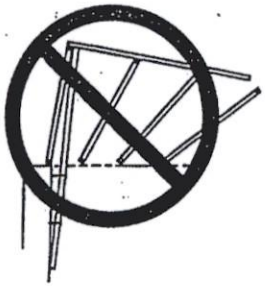

Nails in withdrawal (parallel to force)

All anchors, hangers, tie-downs, seats, bearing ledgers, etc., that are part of the supporting structure shall be accurately and properly placed and permanently attached before truss installation begins. No trusses shall ever be installed on anchors or ties that have temporary connections to the supporting structure.

Nailing scabs to the end of the building to brace the first truss is not recommended.
All nailing of bracing should be done so that nails are driven perpendicular to the direction of force, as shown at right.

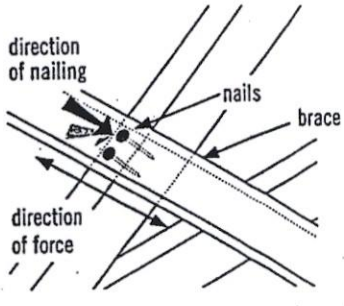

Well nailed (perpendicular to force)

7 Bracing Requirements for 3 Planes of Roof

Temporary erection bracing must be applied to three planes of the roof system to ensure stability: Plane 1) **Top Chord** (sheathing), Plane 2) **Bottom Chord** (ceiling plane), and Plane 3) **Web Member** plane or vertical plane perpendicular to trusses.

1) Top Chord Plane

Most important to the builder or erection contractor is bracing in the plane of the top chord. Truss top chords are susceptible to lateral buckling before they are braced or sheathed.

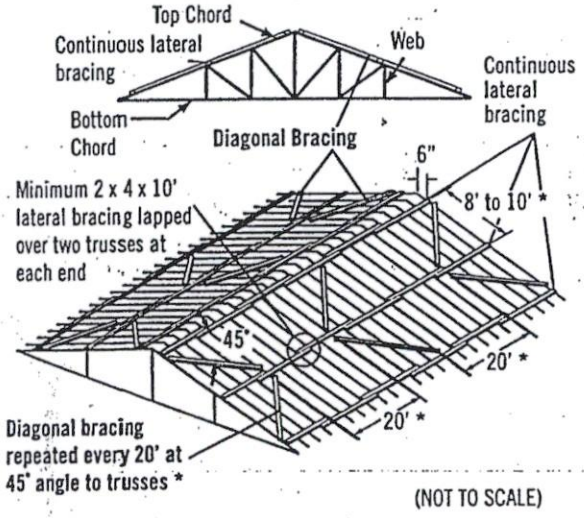

(NOT TO SCALE)

Exact spacing between trusses should be maintained as bracing is installed to avoid the hazardous practice of removing bracing to adjust spacing. This act of "adjusting spacing" can cause trusses to topple if connections are removed at the wrong time.

2) Bottom Chord Plane

In order to hold proper spacing on the bottom chord, temporary bracing is recommended on the top of the bottom chord.

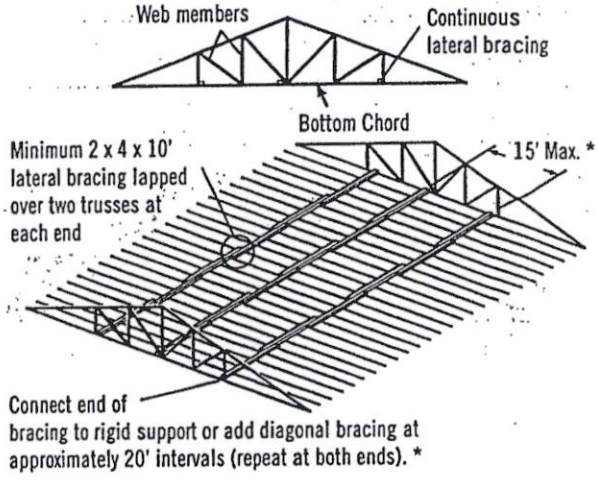

* Long spans, heavy loads or other spacing configurations may require closer spacing between lateral bracing and closer intervals between diagonals. Consult the building designer or HIB and DSB (*Recommended Design Specification for Temporary Bracing of Metal-Plate Connected Wood Trusses*) for details.

Diagonal or cross-bracing is very important!

3) Web Member Plane

"X" bracing, as shown, is critical in preventing trusses from leaning or dominoing. Repeat as shown to create a succession of rigid units.

X-bracing should be installed on vertical web members wherever possible, at or near lateral bracing. Plywood or OSB may be substituted for X-bracing.

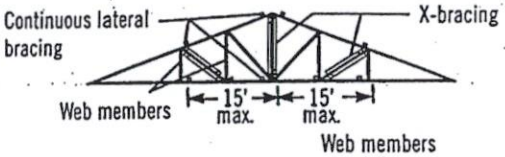

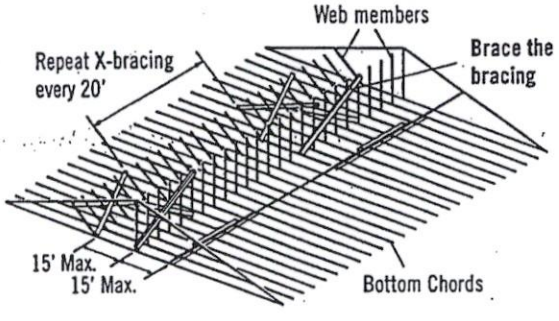

Note: Top chords and some web members are not shown, in order to make drawings more readable.

Do not use short blocks to brace individual trusses without a specific bracing plan detailing their use

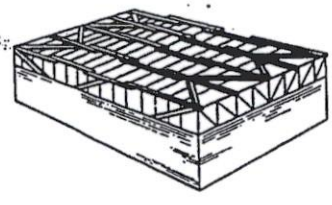

Bracing requirements using the same principles apply to parallel chord trusses

8 Stacking Materials

Do not proceed with building completion until all bracing is securely and properly in place

Never stack materials on unbraced or inadequately braced trusses

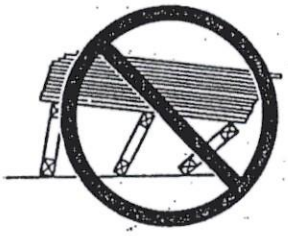

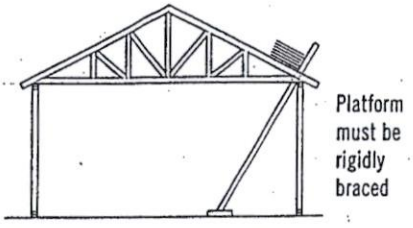

Proper distribution of construction materials is a must during construction.

Never stack materials near a peak

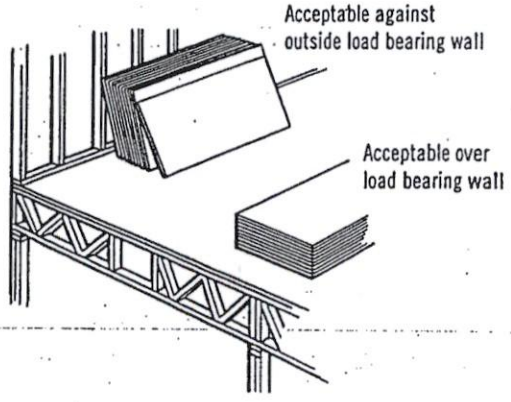

Never stack materials on the cantilever of a truss

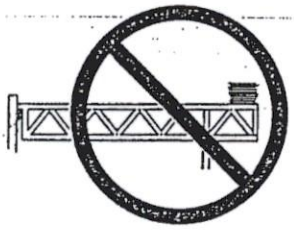

Always stack materials over two or more trusses.

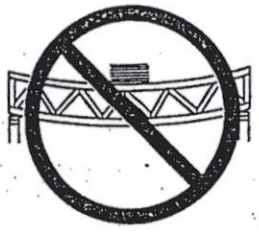

Never overload small groups or single trusses. Position load over as many trusses as possible.

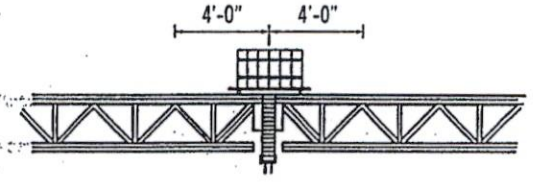

Roofing and mechanical contractors are cautioned to stack materials only along outside supporting members or directly over inside supporting members. Trusses are not designed for dynamic loads (i.e., moving vehicles). Extreme care should be taken when loading and stacking construction materials (rolled roofing, mechanical equipment, etc.) on the roof or floor system.

Never cut any structural member of a truss.

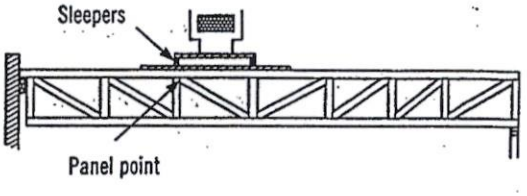

Sleepers for mechanical equipment should be located at panel points (joints) or over main supporting members, and only on trusses that have been designed for such loads.

Caution Notes

Errors in building lines and/or dimensions, or errors by others shall be corrected by the contractor or responsible construction trade subcontractor or supplier **before** erection of trusses begins.

Cutting of nonstructural overhangs is considered a part of normal erection and shall be done by the builder or erection contractor.

Any field modification that involves the cutting, drilling, or relocation of any structural truss member or connector plate shall not be done without the approval of the truss manufacturer or a licensed design professional.

The methods and procedures outlined are intended to ensure that the overall construction techniques employed will put floor and roof trusses **safely** in place in a completed structure. These recommendations for bracing wood trusses originate from the collective experience of leading technical personnel in the wood truss industry, but must, due to the nature of responsibilities involved, be presented only as a **guide** for use by a qualified building designer, builder, or erection contractor. Thus, the Wood Truss Council of America expressly disclaims any responsibility for damages arising from the use, application, or reliance on the recommendations and information contained herein.

[Selected text and figures referenced or reproduced from HIB and DSB by permission of the Truss Plate Institute, Madison, WI.]

THE CANADIAN WOOD TRUSS ASSOCIATION

L'ASSOCIATION CANADIENNE DES FABRICANTS DE FERMES DE BOIS

1400 Blair Place, Suite 210, Ottawa, ON K1J 9B8
Tel.: 613-747-5544 Fax: 613-747-6264

Wood Truss Council of America

One WTCA Center
6300 Enterprise Lane, Madison, WI 53719-1140
Tel.: 608-274-4849 Fax: 608-274-3329
wtca@woodtruss.com www.woodtruss.com

ALPA-BARRIE

FIRM BCIN 113884
DESIGNER BCIN 25593

E19072240 ; E19112509
E19072247 - E19072250
E19072392 - E19072393
E19112586 - E19112604

All work shall conform to the Ontario Building Code O. Reg. 332/12 as amended

For conventional framing roof / ceilings framing shall conform to OBC.9.23

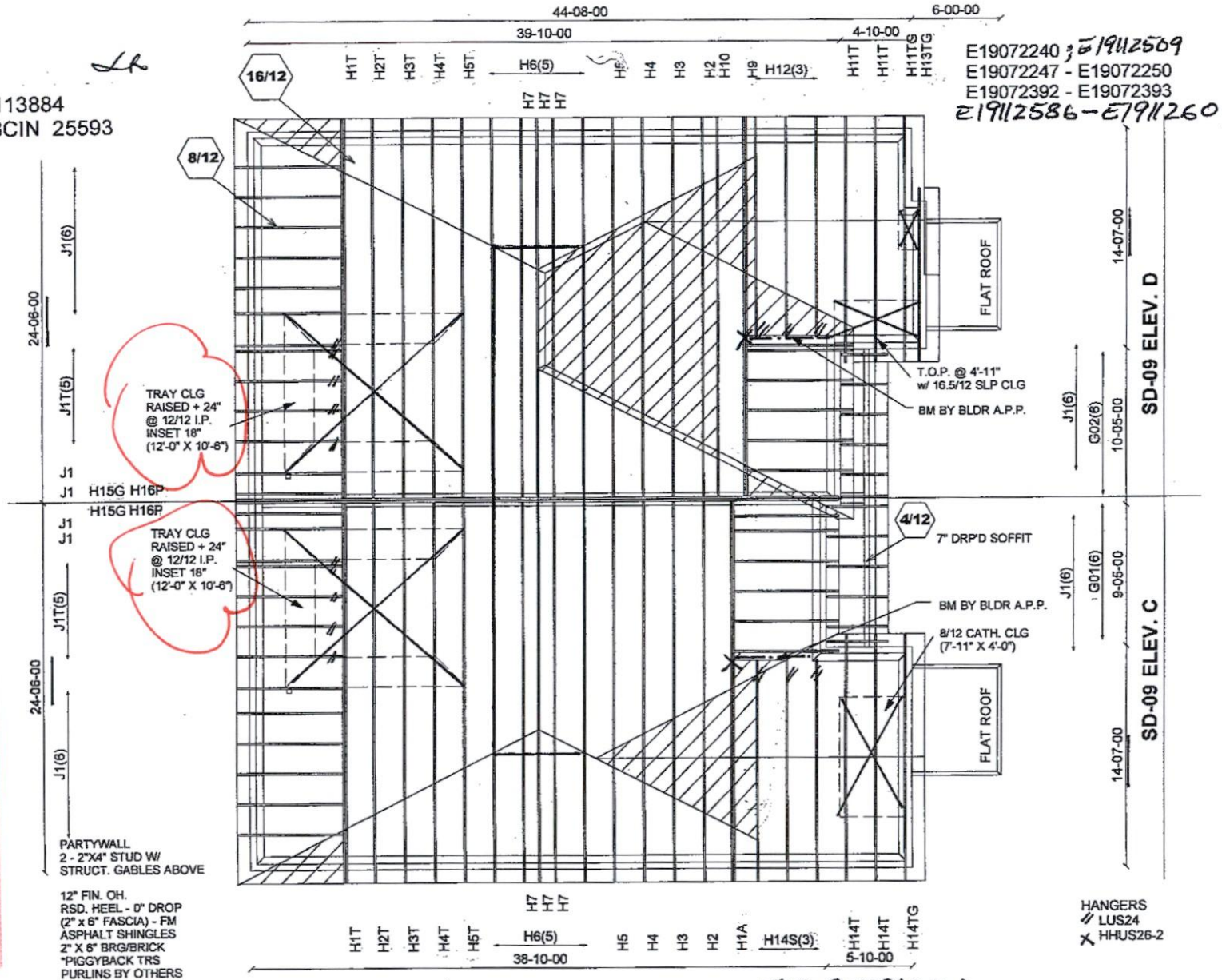

THE GERSHWIN

CITY OF BRAMPTON
BUILDING DIVISION
REVIEWED
DEC 10 2019
BY
MARY FRENETTE

ALL CONVENTIONAL FRAMING TO CONFORM WITH PART 9 O.B.C. LATEST EDITION. ROOF RAFTERS THAT CROSS OVER TRUSSES TO BE 2X4 SPF #2 @ 24" O.C WITH A VERT. POST TO THE TRUSS UNDERNEATH AT EACH CROSS POINT. VERT. POSTS LONGER THAN 6' TO HAVE LATERAL BRACING SO THAT THE DISTANCE BETWEEN END POINTS & BETWEEN ROWS OF BRACING DOES NOT EXCEED 6'

CONVENTIONAL FRAMING BY OTHERS

Mitek V. 8.2.0

Job Track: 39002	Builder / Location: GOLD PARK HOMES / BRAMPTON	Model / Elevation: SD-09 REV1 / C/D OPT TRAY	
Layout ID: 314238	Project: MCLAUGHLIN AND MAYFIELD/ENCORE 2	THESE DRAWINGS CONSTITUTE THE PROPERTY OF ALPA ROOF TRUSSES INC., SHALL NOT BE REPRODUCED, PUBLISHED, OR REDISTRIBUTED IN ANY MANNER OR UTILIZED FOR ANY PURPOSE OTHER THAN THE MANUFACTURE OF TRUSSES BY ALPA ROOF TRUSSES INC AND WILL BE RETRACTED BY ALPA ROOF TRUSSES INC IF UTLILZED FOR ANY OTHER PURPOSE.	
Plan Log: 104619	Date: 2019-10-31 Designer: AMANDA		

EWP DESIGN INC.

(905) 832-2250 FAX (905) 832-0286

RESPONSIBILITIES AND SPECIFICATIONS

RESPONSIBILITIES

1. EWP DESIGN INC. is responsible for the design of trusses as individual components.
2. It is the responsibility of others to ascertain that the design loads utilized on each drawing meet or exceed the actual dead load imposed by the structure, the live load imposed by the intended use and the snow load imposed by local building code or authorities with jurisdictions.
3. All dimensions are to be verified by the owner, contractor, architect or other authorities with jurisdictions before truss fabrication.
4. EWP DESIGN INC. bears no responsibility for the erection of trusses. Persons erecting trusses are cautioned to seek professional advice regarding the temporary and permanent bracing for the system. Bracing shown on EWP DESIGN INC. drawing is specified for the truss as a component only and forms an integral part of the truss design.
5. It is the truss manufacturer's responsibility to ensure that trusses are manufactured in conformance with specifications of EWP DESIGN INC. as outlined below.

SPECIFICATIONS

1. Trusses designed by EWP DESIGN INC. conform to the relevant section of the Ontario Building Code of Canada (Part 9 or Part 4) or to the Canadian code for farm buildings, whichever applies to the building type, as indicated on the EWP DESIGN INC. drawings, and conform to the design procedures established by the Truss Plate Institute of Canada. Unit stresses used for truss designs are as per the edition of CSA-O86 shown on EWP DESIGN INC. drawings.
2. Lumber is to be the size, species and grade as specified on EWP DESIGN INC. drawings.
3. Moisture content of lumber shall not exceed 19% in service unless specified otherwise.
4. Metal connector plates shall be applied to both faces of truss at each joint and shall be positioned as specified.
5. Top chords of trusses are assumed to be continuously braced laterally by roof sheathing or by purlins at intervals not exceeding 12.5 times the thickness of top chord member.
6. Bottom chords shall be laterally braced at intervals not exceeding 3M (10') o.c., where rigid ceiling is not applied directly to the underside of chords.

THESE DRAWINGS CONSTITUTE THE PROPERTY OF EWP DESIGN INC., SHALL NOT BE REPRODUCED, PUBLISHED, OR REDISTRIBUTED IN ANY MANNER OR UTILIZED FOR ANY PURPOSE OTHER THAN THE MANUFACTURE OF TRUSSES BY THE ALPA LUMBER GROUP, AND WILL BE RETRACTED BY EWP DESIGN INC. IF UTILIZED FOR ANY OTHER PURPOSE.

JOB NAME	TRUSS NAME	QUANTITY	PLY	JOB DESC.	DRWG NO.
313999	G01		1	TRUSS DESC. JT-39002	E-19112586

Alpa Roof Truss, Maple

Version 8.300 S Aug 9 2019 MiTek Industries, Inc. Mon Nov 11 15:04:45 2019 Page 1
ID:MF8IirIaTok7DlbpT4B71Xys4PG-Lpgcl?OXV56ySer4PSDV647qZ?DjtDd0R2P1QAyKEKW

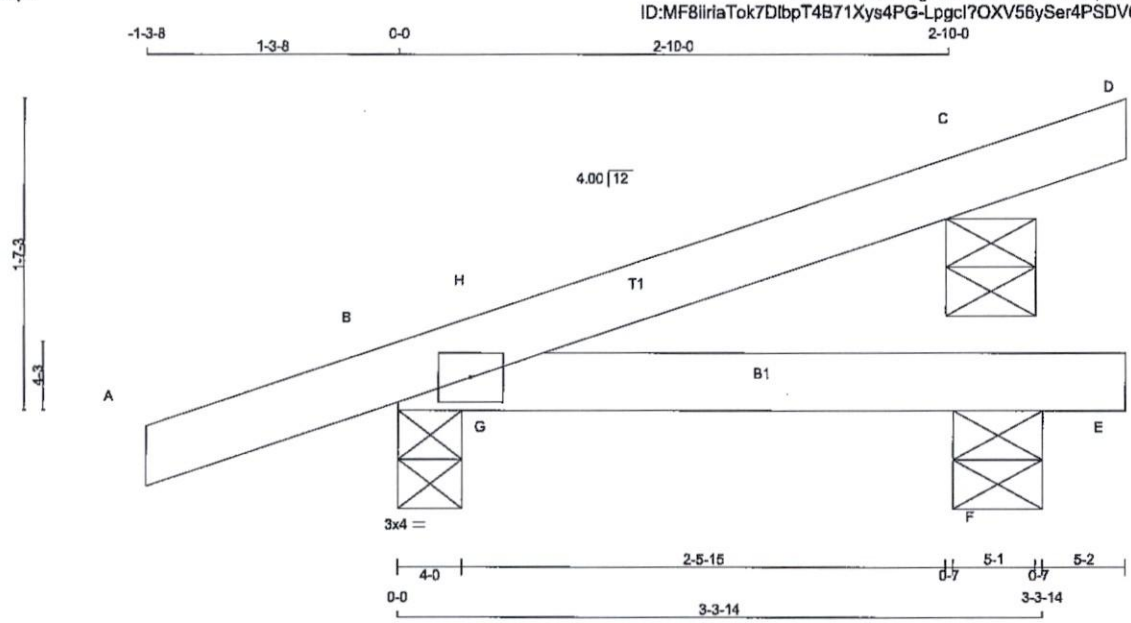

TOTAL WEIGHT = 6 X 10 = 63 lb

LUMBER
N. L. G. A. RULES

CHORDS	SIZE		LUMBER	DESCR.
A - D	2x4	DRY	No.2	SPF
B - E	2x4	DRY	No.2	SPF

DRY: SEASONED LUMBER.

PLATES (table is in inches)

JT	TYPE	PLATES	W	LEN Y	X
B	TMB1-I	MT20	3.0	4.0	

NOTE: Lateral brace(s) shown shall be 2x4 SPF #2

LICENSED PROFESSIONAL ENGINEER
11/11/2019
B. TURENNE
100157040
PROVINCE OF ONTARIO

DIMENSIONS, SUPPORTS AND LOADINGS SPECIFIED BY FABRICATOR TO BE VERIFIED BY BUILDING DESIGNER

BEARINGS

JT	FACTORED GROSS REACTION VERT	HORZ	MAXIMUM FACTORED GROSS REACTION DOWN	HORZ	UPLIFT	INPUT BRG IN-SX	REQRD BRG IN-SX
B	272	0	272	0	0	4-0	1-8
F	59	0	59	0	0	5-8	1-8
C	174	0	174	0	0	5-8	5-8

BEVELED PLATE OR SHIM REQUIRED TO PROVIDE FULL BEARING SURFACE WITH TRUSS CHORD AT JT(S): C

UNFACTORED REACTIONS

JT	1ST LCASE COMBINED	MAX./MIN. COMPONENT REACTIONS SNOW	LIVE	PERM.LIVE	WIND	DEAD	SOIL
B	191	134 / 0	0 / 0	0 / 0	0 / 0	57 / 0	0 / 0
F	44	13 / 0	0 / 0	0 / 0	0 / 0	32 / 0	0 / 0
C	121	93 / 0	0 / 0	0 / 0	0 / 0	28 / 0	0 / 0

BEARING MATERIAL TO BE SPF NO.2 OR BETTER AT JOINT(S) B, F, C

BRACING
TOP CHORD TO BE SHEATHED OR MAX. PURLIN SPACING = 10.00 FT.
MAX. UNBRACED BOTTOM CHORD LENGTH = 10.00 FT OR RIGID CEILING DIRECTLY APPLIED.

ALL PITCH BREAKS AND PERIMETER CORNER JOINTS MUST BE LATERALLY RESTRAINED.

LOADING
TOTAL LOAD CASES: (5)

CHORDS

MEMB. FR-TO	MAX. FORCE (LBS)	FACTORED VERT. LOAD LC1 (PLF) FROM	TO	MAX CSI (LC)	MAX. UNBRAC LENGTH
A- B	0 / 16	-84.9	-84.9	0.12 (5)	10.00
B- H	-10 / 0	-84.9	-84.9	0.03 (4)	10.00
H- C	0 / 2	-84.9	-84.9	0.10 (1)	10.00
C- D	-10 / 0	-84.9	-84.9	0.03 (1)	10.00
B- G	0 / 0	-18.5	-18.5	0.08 (1)	10.00
G- F	0 / 0	-18.5	-18.5	0.08 (1)	10.00
F- E	0 / 0	-18.5	-18.5	0.01 (4)	10.00

WEBS

MEMB. FR-TO	MAX. FORCE (LBS)	MAX CSI (LC)
G- H	-99 / 5	0.00 (1)

CANTILEVER ANALYSIS HAS BEEN CONSIDERED IN THIS DESIGN

DESIGN CRITERIA

SPECIFIED LOADS:

TOP CH.	LL =	23.3	PSF
	DL =	6.0	PSF
BOT CH.	LL =	0.0	PSF
	DL =	7.4	PSF
TOTAL LOAD	=	36.7	PSF

SPACING = 24.0 IN. C/C

THIS TRUSS IS DESIGNED FOR RESIDENTIAL OR SMALL BUILDING REQUIREMENTS OF PART 9, NBCC 2010, NBCC 2015

THIS DESIGN COMPLIES WITH:
- PART 9 OF BCBC 2018 , OBC 2012 , ABC 2019
- CSA 086-09, CSA 086-14
- TPIC 2011, TPIC 2014

(55 % OF 27.2 P.S.F. G.S.L. PLUS 8.4 P.S.F. RAIN LOAD) EQUALS 23.3 P.S.F. SPECIFIED ROOF LIVE LOAD

ALLOWABLE DEFL.(LL)= L/360 (0.19")
CALCULATED VERT. DEFL.(LL) = L/ 999 (0.01")
ALLOWABLE DEFL.(TL)= L/360 (0.19")
CALCULATED VERT. DEFL.(TL) = L/ 999 (0.01")

CANTILEVER DEFLECTION:
ALLOWABLE DEFL.(TL)= L/120 (0.19")
CALCULATED VERT. DEFL.(TL) = L/ 999 (0.00")

CSI: TC=0.12/1.00 (A-B:5) , BC=0.08/1.00 (F-G:1) , WB=0.00/1.00 (G-H:1) , SSI=0.10/1.00 (A-B:5)

DOL LUMBER=1.00 NAIL=1.00 LS BEND=1.10 COMP=1.10 SHEAR=1.10 TENS= 1.10

COMPANION LIVE LOAD FACTOR = 1.00

TRUSS PLATE MANUFACTURER IS NOT RESPONSIBLE FOR QUALITY CONTROL IN THE TRUSS MANUFACTURING PLANT .

NAIL VALUES

PLATE	GRIP(DRY) (PSI) MAX	MIN	SHEAR (PLI) MAX	MIN	SECTION (PLI) MAX	MIN
MT20	618	354	1667	788	1987	1656

PLATE PLACEMENT TOL. = 0.250 inches

PLATE ROTATION TOL. = 5.0 Deg.

JSI GRIP= 0.17 (B) (INPUT = 0.90)
JSI METAL= 0.05 (B) (INPUT = 1.00)

JOB NAME	TRUSS NAME	QUANTITY	PLY	JOB DESC.		DRWG NO.
313999	G02		1	TRUSS DESC.	JT-39002	E-19112587

Alpa Roof Truss, Maple

Version 8.300 S Aug 9 2019 MiTek Industries, Inc. Mon Nov 11 15:04:47 2019 Page 1
ID:MF8iiriaTok7DlbpT4B71Xys4PG-HBoMjhPn1iMgix?SWtFzBVCABovNL77JvLu7V2yKEKU

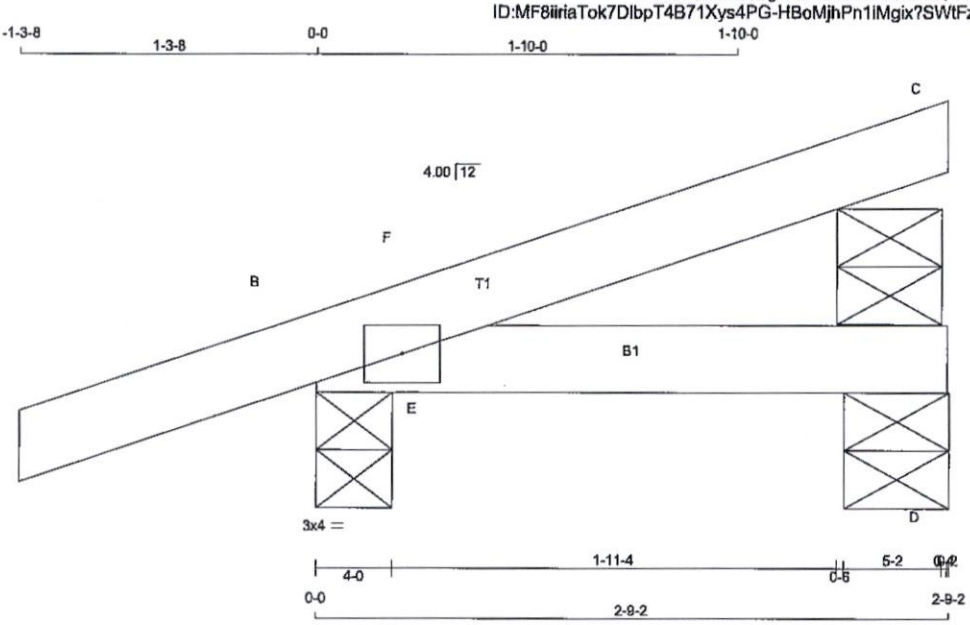

TOTAL WEIGHT = 6 X 8 = 49 lb [M]

LUMBER
N. L. G. A. RULES

CHORDS	SIZE		LUMBER	DESCR.
A - C	2x4	DRY	No.2	SPF
B - D	2x4	DRY	No.2	SPF

DRY: SEASONED LUMBER.

PLATES (table is in inches)

JT	TYPE	PLATES	W	LEN	Y	X
B	TMB1-I	MT20	3.0	4.0		

NOTE: Lateral brace(s) shown shall be 2x4 SPF #2

LICENSED PROFESSIONAL ENGINEER
11/11/2019
R. TURENNE
100157040
PROVINCE OF ONTARIO

DIMENSIONS, SUPPORTS AND LOADINGS SPECIFIED BY FABRICATOR TO BE VERIFIED BY BUILDING DESIGNER

BEARINGS

JT	FACTORED GROSS REACTION VERT	HORZ	MAXIMUM FACTORED GROSS REACTION DOWN	HORZ	UPLIFT	INPUT BRG IN-SX	REQRD BRG IN-SX
C	99	0	99	0	0	5-8	5-8
B	256	0	256	0	0	4-0	1-8
D	43	0	43	0	0	5-8 (5-6)	1-8

VALUE IN PARENTHESIS INDICATES EFFECTIVE BEARING LENGTH

BEVELED PLATE OR SHIM REQUIRED TO PROVIDE FULL BEARING SURFACE WITH TRUSS CHORD AT JT(S): C

UNFACTORED REACTIONS

JT	1ST LCASE COMBINED	MAX./MIN. COMPONENT REACTIONS SNOW	LIVE	PERM.LIVE	WIND	DEAD	SOIL
C	69	52 / 0	0 / 0	0 / 0	0 / 0	17 / 0	0 / 0
B	179	126 / 0	0 / 0	0 / 0	0 / 0	53 / 0	0 / 0
D	32	12 / 0	0 / 0	0 / 0	0 / 0	20 / 0	0 / 0

BEARING MATERIAL TO BE SPF NO.2 OR BETTER AT JOINT(S) C, B, D

BRACING
TOP CHORD TO BE SHEATHED OR MAX. PURLIN SPACING = 10.00 FT.
MAX. UNBRACED BOTTOM CHORD LENGTH = 10.00 FT OR RIGID CEILING DIRECTLY APPLIED.

ALL PITCH BREAKS AND PERIMETER CORNER JOINTS MUST BE LATERALLY RESTRAINED.

LOADING
TOTAL LOAD CASES: (5)

CHORDS

MEMB. FR-TO	MAX. FACTORED FORCE (LBS)	FACTORED VERT. LOAD LC1 (PLF) FROM	TO	MAX CSI (LC)	MAX. UNBRAC LENGTH
A- B	0 / 16	-84.9	-84.9	0.12 (5)	10.00
B- F	-10 / 0	-84.9	-84.9	0.02 (4)	10.00
F- C	0 / 2	-84.9	-84.9	0.08 (1)	10.00
B- E	0 / 0	-18.5	-18.5	0.07 (1)	10.00
E- D	0 / 0	-18.5	-18.5	0.07 (1)	10.00

WEBS

MEMB. FR-TO	MAX. FACTORED FORCE (LBS)	MAX CSI (LC)
E- F	-85 / 3	0.00 (1)

CANTILEVER ANALYSIS HAS BEEN CONSIDERED IN THIS DESIGN

DESIGN CRITERIA

SPECIFIED LOADS:

TOP CH.	LL	=	23.3	PSF
	DL	=	6.0	PSF
BOT CH.	LL	=	0.0	PSF
	DL	=	7.4	PSF
TOTAL LOAD		=	36.7	PSF

SPACING = 24.0 IN. C/C

THIS TRUSS IS DESIGNED FOR RESIDENTIAL OR SMALL BUILDING REQUIREMENTS OF PART 9, NBCC 2010, NBCC 2015

THIS DESIGN COMPLIES WITH:
- PART 9 OF BCBC 2018 , OBC 2012 , ABC 2019
- CSA 086-09, CSA 086-14
- TPIC 2011, TPIC 2014

(55 % OF 27.2 P.S.F. G.S.L. PLUS 8.4 P.S.F. RAIN LOAD) EQUALS 23.3 P.S.F. SPECIFIED ROOF LIVE LOAD

ALLOWABLE DEFL.(LL)= L/360 (0.19")
CALCULATED VERT. DEFL.(LL) = L/ 999 (0.00")
ALLOWABLE DEFL.(TL)= L/360 (0.19")
CALCULATED VERT. DEFL.(TL) = L/ 999 (0.01")

CSI: TC=0.12/1.00 (A-B:5) , BC=0.07/1.00 (D-E:1) , WB=0.00/1.00 (E-F:1) , SSI=0.09/1.00 (A-B:5)

DOL LUMBER=1.00 NAIL=1.00 LS BEND=1.10 COMP=1.10 SHEAR=1.10 TENS= 1.10

COMPANION LIVE LOAD FACTOR = 1.00

TRUSS PLATE MANUFACTURER IS NOT RESPONSIBLE FOR QUALITY CONTROL IN THE TRUSS MANUFACTURING PLANT .

NAIL VALUES

PLATE	GRIP(DRY) (PSI) MAX	MIN	SHEAR (PLI) MAX	MIN	SECTION (PLI) MAX	MIN
MT20	618	354	1667	788	1987	1656

PLATE PLACEMENT TOL. = 0.250 inches

PLATE ROTATION TOL. = 5.0 Deg.

JSI GRIP= 0.16 (B) (INPUT = 0.90)
JSI METAL= 0.04 (B) (INPUT = 1.00)

JOB NAME	TRUSS NAME	QUANTITY	PLY	JOB DESC.	DRWG NO.
313999	H1A		2	TRUSS DESC. JT-39002	E-19112588

Alpa Roof Truss, Maple

Version 8.300 S Aug 9 2019 MiTek Industries, Inc. Mon Nov 11 15:04:48 2019 Page 1

ID:MF8iirlaTok7DlbpT4B71Xys4PG-lOMlx1QQo0UXJ5af4amCkjIDPCB84QPS8?dh1VyKEKT

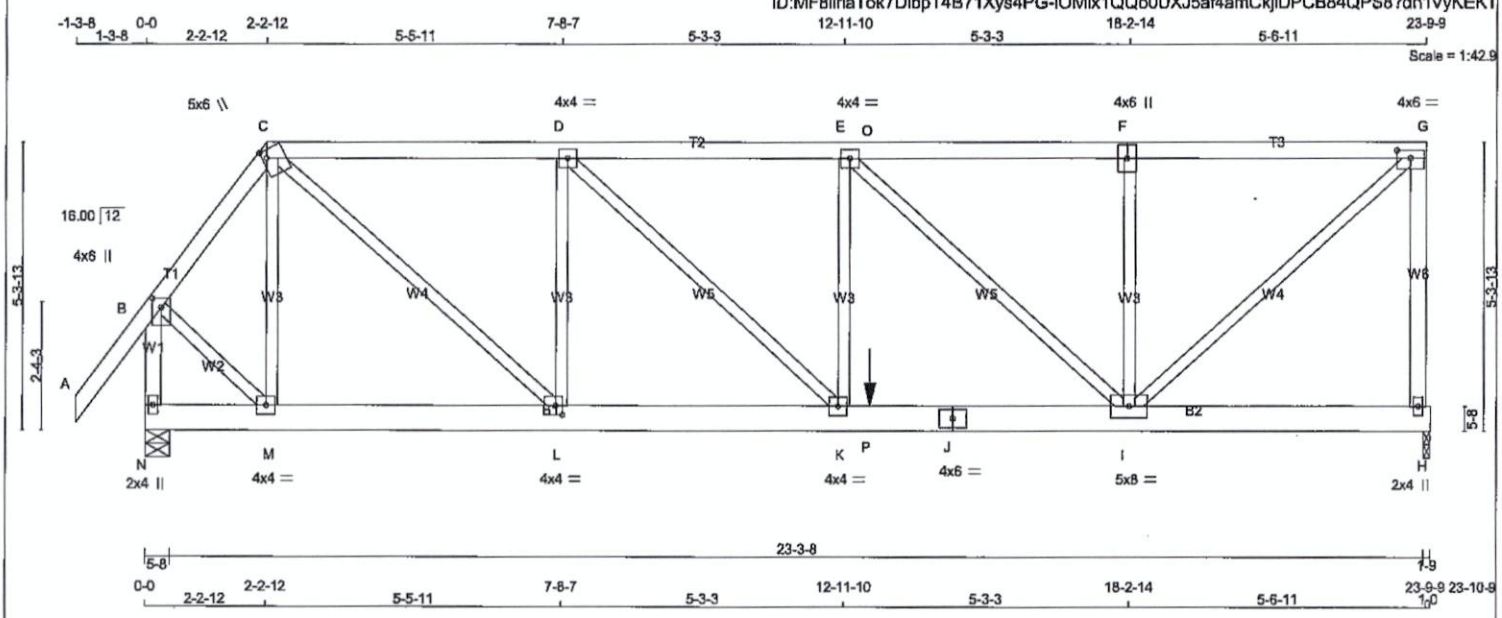

TOTAL WEIGHT = 2 X 121 = 242 lb

[M]

LUMBER

N. L. G. A. RULES

CHORDS	SIZE		LUMBER	DESCR.
A - C	2x4	DRY	No.2	SPF
C - F	2x4	DRY	No.2	SPF
F - G	2x4	DRY	No.2	SPF
H - G	2x4	DRY	No.2	SPF
N - B	2x4	DRY	No.2	SPF
N - J	2x6	DRY	No.2	SPF
J - H	2x6	DRY	No.2	SPF
ALL WEBS EXCEPT	2x3	DRY	No.2	SPF

DRY: SEASONED LUMBER.

DESIGN CONSISTS OF 2 TRUSSES BUILT SEPARATELY THEN FASTENED TOGETHER AS FOLLOWS:

CHORDS	#ROWS	SURFACE SPACING (IN)	LOAD(PLF)
TOP CHORDS : (0.122"X3") SPIRAL NAILS			
A- C	1	12	TOP
C- F	1	12	SIDE(41.1)
F- G	1	12	SIDE(41.1)
G- H	1	12	TOP
N- B	1	12	TOP
BOTTOM CHORDS : (0.122"X3") SPIRAL NAILS			
N- J	2	12	SIDE(10.0)
J- H	2	12	SIDE(10.0)
WEBS : (0.122"X3") SPIRAL NAILS			
2x3	1	6	

NAILS TO BE DRIVEN FROM ONE SIDE ONLY.

GIRDER NAILING ASSUMES NAILED HANGERS ARE FASTENED WITH MIN. 3-0 INCH NAILS.

TOP - COMPONENTS ARE LOADED FROM THE TOP AND MUST BE PLACED ON TOP EDGE OF ALL PLIES FOR THE LOAD TO BE TRANSFERRED TO EACH PLY.

SIDE - PLF SHOWN IS THE EQUIVALENT UDL APPLIED TO ONE SIDE THAT THE CORRESPONDING NAILING PATTERN SHALL BE CAPABLE OF TRANSFERING. REMAINING PLF MUST BE APPLIED ON THE OPPOSITE SIDE OR ON THE TOP.

NOTE: Lateral brace(s) shown shall be 2x4 SPF #2

LICENSED PROFESSIONAL ENGINEER
11/11/2019
R. TURENNE
100157040
PROVINCE OF ONTARIO

DIMENSIONS, SUPPORTS AND LOADINGS SPECIFIED BY FABRICATOR TO BE VERIFIED BY BUILDING DESIGNER

BEARINGS

JT	FACTORED GROSS REACTION VERT	HORZ	MAXIMUM FACTORED GROSS REACTION DOWN	HORZ	UPLIFT	INPUT BRG IN-SX	REQRD BRG IN-SX
H	2664	0	2664	0	0	1-9	1-8
N	2053	0	2053	0	0	5-8	1-8

UNFACTORED REACTIONS

JT	1ST LCASE COMBINED	MAX./MIN. COMPONENT REACTIONS SNOW	LIVE	PERM.LIVE	WIND	DEAD	SOIL
H	1891	1200 / 0	0 / 0	0 / 0	0 / 0	691 / 0	0 / 0
N	1455	937 / 0	0 / 0	0 / 0	0 / 0	518 / 0	0 / 0

BEARING MATERIAL TO BE SPF NO.2 OR BETTER AT JOINT(S) H, N

BRACING

TOP CHORD TO BE SHEATHED OR MAX. PURLIN SPACING = 4.70 FT.
MAX. UNBRACED BOTTOM CHORD LENGTH = 10.00 FT OR RIGID CEILING DIRECTLY APPLIED.

ALL PITCH BREAKS AND PERIMETER CORNER JOINTS MUST BE LATERALLY RESTRAINED.

LOADING

TOTAL LOAD CASES: (4)

CHORDS

MEMB. FR-TO	MAX. FACTORED FORCE (LBS)	FACTORED VERT. LOAD (PLF) FROM	TO	LC1 MAX CSI (LC)	MAX. UNBRAC LENGTH
A- B	0 / 48	-84.9	-84.9	0.07 (1)	10.00
B- C	-1448 / 0	-84.9	-84.9	0.05 (1)	6.25
C- D	-2424 / 0	-84.9	-84.9	0.21 (1)	5.57
D- E	-3422 / 0	-84.9	-84.9	0.34 (1)	4.70
E- O	-2390 / 0	-84.9	-84.9	0.35 (1)	5.38
O- F	-2390 / 0	-167.1	-167.1	0.35 (1)	5.38
F- G	-2381 / 0	-167.1	-167.1	0.56 (1)	5.01
H- G	-2585 / 0	0.0	0.0	0.60 (1)	7.06
N- B	-2071 / 0	0.0	0.0	0.14 (1)	7.69
N- M	0 / 0	-18.5	-18.5	0.03 (1)	10.00
M- L	0 / 848	-18.5	-18.5	0.09 (1)	10.00
L- K	0 / 2425	-18.5	-18.5	0.23 (1)	10.00
K- P	0 / 3422	-18.5	-18.5	0.35 (1)	10.00
P- J	0 / 3422	-36.4	-36.4	0.35 (1)	10.00
J- I	0 / 3422	-36.4	-36.4	0.35 (1)	10.00
I- H	0 / 0	-36.4	-36.4	0.08 (4)	10.00

WEBS

MEMB. FR-TO	MAX. FACTORED FORCE (LBS)	MAX CSI (LC)
M- C	-555 / 0	0.11 (1)
B- M	0 / 1104	0.14 (1)
C- L	0 / 2115	0.26 (1)
L- D	-1380 / 0	0.28 (1)
D- K	0 / 1368	0.17 (1)
K- E	0 / 254	0.04 (4)
E- I	-1416 / 0	0.70 (1)
I- F	-836 / 0	0.17 (1)
I- G	0 / 3185	0.39 (1)

FACTORED CONCENTRATED LOADS (LBS)

JT	LOC.	LC1	MAX-	MAX+	FACE	DIR.	TYPE	HEEL	CONN.
P	13-5-9	-1103	-1103	—	FRONT	VERT	TOTAL	—	C1

DESIGN CRITERIA

*** SPECIAL LOADS ANALYSIS ***
GEOMETRY AND/OR BASIC LOADS CHANGED BY USER.
LOADS WERE DERIVED FROM USER INPUT
NO FURTHER MODIFICATIONS WERE MADE

SPECIFIED LOADS:

TOP CH.	LL	=	23.3	PSF
	DL	=	6.0	PSF
BOT CH.	LL	=	0.0	PSF
	DL	=	7.4	PSF
TOTAL LOAD		=	36.7	PSF

SPACING = 24.0 IN. C/C

LOADING IN FLAT SECTION BASED ON A SLOPE OF 2.00/12 MINIMUM

GIRDER TYPE: CPrimeHip
LEFT SETBACK = 2-2-12
RIGHT SETBACK = 0-0
END SETBACK = 5-10-8
END WALL WIDTH = 0-0
CORNER FRAMING TYPE: CONVENTIONAL
END JACK TYPE: CONVENTIONAL
APPLIED TO FRONT SIDE
- ADDT'L LOADS BASED ON 55 % OF GSL.
LOADS APPLIED TO FIRST 10-5-0 OF SPAN MEASURED FROM THE RIGHT.

*** NON STANDARD GIRDER ***
ADDT'L USER-DEFINED LOADS APPLIED TO ALL LOAD CASES.

THIS TRUSS IS DESIGNED FOR RESIDENTIAL OR SMALL BUILDING REQUIREMENTS OF PART 9, NBCC 2010, NBCC 2015

THIS DESIGN COMPLIES WITH:
- PART 9 OF BCBC 2018 , OBC 2012 , ABC 2019
- CSA 086-09, CSA 086-14
- TPIC 2011, TPIC 2014

(55 % OF 27.2 P.S.F. G.S.L. PLUS 8.4 P.S.F. RAIN LOAD) EQUALS 23.3 P.S.F. SPECIFIED ROOF LIVE LOAD

ALLOWABLE DEFL.(LL)= L/360 (0.79")
CALCULATED VERT. DEFL.(LL) = L/ 999 (0.06")
ALLOWABLE DEFL.(TL)= L/360 (0.79")
CALCULATED VERT. DEFL.(TL) = L/ 999 (0.12")

CSI: TC=0.60/1.00 (G-H:1) , BC=0.35/1.00 (I-K:1) , WB=0.70/1.00 (E-I:1) , SSI=0.36/1.00 (I-K:1)

DOL LUMBER=1.00 NAIL=1.00 LS BEND=1.00 COMP=1.00 SHEAR=1.00 TENS= 1.00

COMPANION LIVE LOAD FACTOR = 1.00

AUTOSOLVE RIGHT HEEL ONLY

TRUSS PLATE MANUFACTURER IS NOT RESPONSIBLE FOR QUALITY CONTROL IN THE TRUSS MANUFACTURING PLANT .

CONTINUED ON PAGE 2

JOB NAME	TRUSS NAME	QUANTITY	PLY	JOB DESC.	DRWG NO.
313999	H1A		2	TRUSS DESC. JT-39002	E-19112588(2)

Alpa Roof Truss, Maple

ID:MF8iIrIaTok7DlbpT4B71Xys4PG-Daw78MR2ZKcOxF9reIHHRGwHO9cXNptfcMfNEZxyKEKS

PLATES (table is in inches)

JT	TYPE	PLATES	W	LEN	Y	X
B	TMVW+p	MT20	4.0	6.0	2.00	2.00
C	TTWW+m	MT20	5.0	6.0	1.75	1.00
D	TMWW-t	MT20	4.0	4.0		
E	TMWW-t	MT20	4.0	4.0		
F	TSW+l	MT20	4.0	6.0		
G	TMVW-t	MT20	4.0	6.0	1.75	3.00
H	BMV1+p	MT20	2.0	4.0		
I	BMWWW-t	MT20	5.0	8.0		
J	BS-t	MT20	4.0	6.0		
K	BMWW-t	MT20	4.0	4.0		
L	BMWW-t	MT20	4.0	4.0	2.00	1.50
M	BMWW-t	MT20	4.0	4.0		
N	BMV1+p	MT20	2.0	4.0		

NAIL VALUES

PLATE	GRIP(DRY) (PSI) MAX	MIN	SHEAR (PLI) MAX	MIN	SECTION (PLI) MAX	MIN
MT20	618	354	1667	788	1987	1656

PLATE PLACEMENT TOL. = 0.250 Inches

PLATE ROTATION TOL. = 5.0 Deg.

JSI GRIP= 0.88 (G) (INPUT = 0.90)
JSI METAL= 0.58 (J) (INPUT = 1.00)

NOTE: Lateral brace(s) shown shall be 2x4 SPF #2

LICENSED PROFESSIONAL ENGINEER
11/11/2019
R. TURENNE
100157040
PROVINCE OF ONTARIO

JOB NAME	TRUSS NAME	QUANTITY	PLY	JOB DESC.	DRWG NO.
313999	H9		2	TRUSS DESC. JT-39002	E-19112589

Alpa Roof Truss, Maple

Version 8.300 S Aug 9 2019 MiTek Industries, Inc. Mon Nov 11 15:04:50 2019 Page 1
ID:MF8iIriaTok7DlbpT4B71Xys4PG-hmUVMiSgKdkFZPk1B?ogp8qZf0oDYOVlbJ6o5NyKEKR

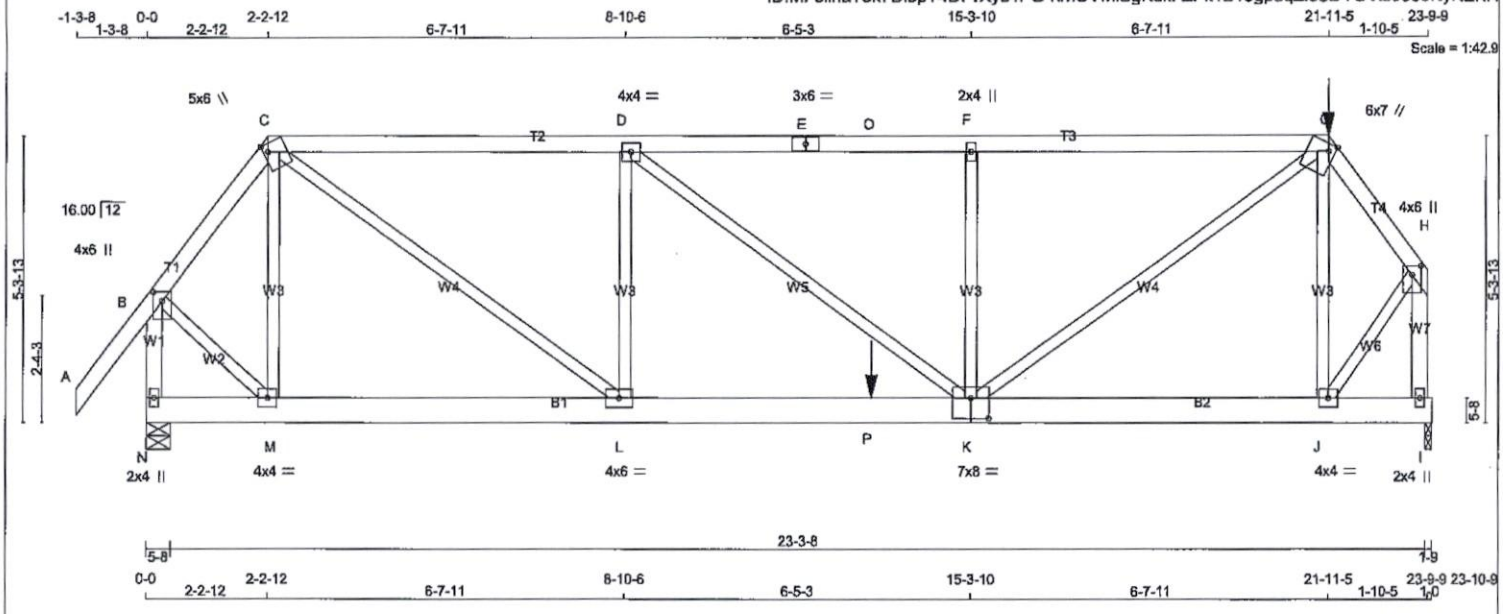

TOTAL WEIGHT = 2 X 119 = 239 lb (M)

LUMBER

N. L. G. A. RULES

CHORDS	SIZE		LUMBER	DESCR.
A - C	2x4	DRY	No.2	SPF
C - E	2x4	DRY	No.2	SPF
E - G	2x4	DRY	No.2	SPF
G - H	2x4	DRY	No.2	SPF
N - B	2x4	DRY	No.2	SPF
I - H	2x4	DRY	No.2	SPF
N - K	2x6	DRY	No.2	SPF
K - I	2x6	DRY	No.2	SPF
ALL WEBS EXCEPT	2x3	DRY	No.2	SPF

DRY: SEASONED LUMBER.

DESIGN CONSISTS OF 2 TRUSSES BUILT SEPARATELY THEN FASTENED TOGETHER AS FOLLOWS:

CHORDS	#ROWS	SURFACE SPACING (IN)	LOAD(PLF)
TOP CHORDS : (0.122"X3") SPIRAL NAILS			
A- C	1	12	TOP
C- E	1	12	TOP
E- G	1	12	SIDE(41.1)
G- H	1	12	SIDE(61.0)
N- B	1	12	TOP
I- H	1	12	TOP
BOTTOM CHORDS : (0.122"X3") SPIRAL NAILS			
N- K	2	12	SIDE(10.0)
K- I	2	12	SIDE(10.0)
WEBS : (0.122"X3") SPIRAL NAILS			
2x3	1	6	

NAILS TO BE DRIVEN FROM ONE SIDE ONLY.

GIRDER NAILING ASSUMES NAILED HANGERS ARE FASTENED WITH MIN. 3-0 INCH NAILS.

TOP - COMPONENTS ARE LOADED FROM THE TOP AND MUST BE PLACED ON TOP EDGE OF ALL PLIES FOR THE LOAD TO BE TRANSFERRED TO EACH PLY.

NOTE: Lateral brace(s) shown shall be 2x4 SPF #2

LICENSED PROFESSIONAL ENGINEER
11/11/2019
R. TURENNE
100157040
PROVINCE OF ONTARIO

DIMENSIONS, SUPPORTS AND LOADINGS SPECIFIED BY FABRICATOR TO BE VERIFIED BY BUILDING DESIGNER

BEARINGS

JT	FACTORED GROSS REACTION VERT	HORZ	MAXIMUM FACTORED GROSS REACTION DOWN	HORZ	UPLIFT	INPUT BRG IN-SX	REQRD BRG IN-SX
N	2056	0	2056	0	0	5-8	1-8
I	2628	0	2628	0	0	1-9	1-8

UNFACTORED REACTIONS

JT	1ST LCASE COMBINED	MAX./MIN. COMPONENT REACTIONS SNOW	LIVE	PERM.LIVE	WIND	DEAD	SOIL
N	1457	939 / 0	0 / 0	0 / 0	0 / 0	519 / 0	0 / 0
I	1866	1181 / 0	0 / 0	0 / 0	0 / 0	686 / 0	0 / 0

BEARING MATERIAL TO BE SPF NO.2 OR BETTER AT JOINT(S) N, I

BRACING

TOP CHORD TO BE SHEATHED OR MAX. PURLIN SPACING = 4.43 FT.
MAX. UNBRACED BOTTOM CHORD LENGTH = 10.00 FT OR RIGID CEILING DIRECTLY APPLIED.

ALL PITCH BREAKS AND PERIMETER CORNER JOINTS MUST BE LATERALLY RESTRAINED.

LOADING

TOTAL LOAD CASES: (4)

CHORDS MEMB. FR-TO	MAX. FACTORED FORCE (LBS)	FACTORED VERT. LOAD (PLF) FROM	TO	LC1 CSI (LC)	MAX UNBRAC LENGTH	WEBS MEMB. FR-TO	MAX. FACTORED FORCE (LBS)	MAX CSI (LC)
A- B	0 / 48	-84.9	-84.9	0.07 (1)	10.00	M- C	-705 / 0	0.14 (1)
B- C	-1395 / 0	-84.9	-84.9	0.05 (1)	6.25	J- G	-950 / 0	0.19 (1)
C- D	-2819 / 0	-84.9	-84.9	0.32 (1)	5.13	B- M	0 / 1064	0.13 (1)
D- E	-3230 / 0	-84.9	-84.9	0.59 (1)	4.44	J- H	0 / 1592	0.20 (1)
E- O	-3230 / 0	-84.9	-84.9	0.59 (1)	4.44	C- L	0 / 2491	0.31 (1)
O- F	-3230 / 0	-167.1	-167.1	0.59 (1)	4.44	L- D	-870 / 0	0.18 (1)
F- G	-3229 / 0	-167.1	-167.1	0.61 (1)	4.43	D- K	0 / 518	0.06 (1)
G- H	-1714 / 0	-84.9	-84.9	0.04 (1)	6.25	K- F	-1075 / 0	0.22 (1)
N- B	-2004 / 0	0.0	0.0	0.13 (1)	7.78	K- G	0 / 2776	0.34 (1)
I- H	-2685 / 0	0.0	0.0	0.21 (1)	6.96			
N- M	0 / 0	-18.5	-18.5	0.03 (1)	10.00			
M- L	0 / 813	-18.5	-18.5	0.24 (1)	10.00			
L- P	0 / 2819	-18.5	-18.5	0.70 (1)	10.00			
P- K	0 / 2819	-36.4	-36.4	0.70 (1)	10.00			
K- J	0 / 995	-36.4	-36.4	0.14 (4)	10.00			
J- I	0 / 0	-36.4	-36.4	0.10 (4)	10.00			

FACTORED CONCENTRATED LOADS (LBS)

JT	LOC.	LC1	MAX-	MAX+	FACE	DIR.	TYPE	HEEL	CONN.
G	21-11-5	-120	-120	—	FRONT	VERT	TOTAL	—	C1
P	13-5-9	-1103	-1103	—	FRONT	VERT	TOTAL	—	C1

DESIGN CRITERIA

*** SPECIAL LOADS ANALYSIS ***
GEOMETRY AND/OR BASIC LOADS CHANGED BY USER.
LOADS WERE DERIVED FROM USER INPUT
NO FURTHER MODIFICATIONS WERE MADE

SPECIFIED LOADS:

TOP CH.	LL	=	23.3	PSF
	DL	=	6.0	PSF
BOT CH.	LL	=	0.0	PSF
	DL	=	7.4	PSF
TOTAL LOAD		=	36.7	PSF

SPACING = 24.0 IN. C/C

LOADING IN FLAT SECTION BASED ON A SLOPE OF 2.00/12 MINIMUM

GIRDER TYPE: CPrimeHip
LEFT SETBACK = 2-2-12
RIGHT SETBACK = 1-11-5
END SETBACK = 5-10-8
END WALL WIDTH = 0-0
CORNER FRAMING TYPE: CONVENTIONAL
END JACK TYPE: CONVENTIONAL
APPLIED TO FRONT SIDE
- ADDT'L LOADS BASED ON 56 % OF GSL.
LOADS APPLIED TO FIRST 10-5-0 OF SPAN MEASURED FROM THE RIGHT.

*** NON STANDARD GIRDER ***
ADDT'L USER-DEFINED LOADS APPLIED TO ALL LOAD CASES.

THIS TRUSS IS DESIGNED FOR RESIDENTIAL OR SMALL BUILDING REQUIREMENTS OF PART 9, NBCC 2010, NBCC 2015

THIS DESIGN COMPLIES WITH:
- PART 9 OF BCBC 2018 , OBC 2012 , ABC 2019
- CSA 086-09, CSA 086-14
- TPIC 2011, TPIC 2014

(55 % OF 27.2 P.S.F. G.S.L. PLUS 8.4 P.S.F. RAIN LOAD) EQUALS 23.3 P.S.F. SPECIFIED ROOF LIVE LOAD

ALLOWABLE DEFL.(LL)= L/360 (0.79")
CALCULATED VERT. DEFL.(LL) = L/ 999 (0.10")
ALLOWABLE DEFL.(TL)= L/360 (0.79")
CALCULATED VERT. DEFL.(TL) = L/ 999 (0.20")

CSI: TC=0.61/1.00 (F-G:1) , BC=0.70/1.00 (K-L:1) , WB=0.34/1.00 (G-K:1) , SSI=0.28/1.00 (F-G:1)

DOL LUMBER=1.00 NAIL=1.00 LS BEND=1.00 COMP=1.00 SHEAR=1.00 TENS= 1.00

COMPANION LIVE LOAD FACTOR = 1.00

AUTOSOLVE RIGHT HEEL ONLY

TRUSS PLATE MANUFACTURER IS NOT RESPONSIBLE FOR QUALITY CONTROL IN THE TRUSS MANUFACTURING PLANT .

CONTINUED ON PAGE 2

JOB NAME	TRUSS NAME	QUANTITY	PLY	JOB DESC.	DRWG NO.
313999	H9		2	TRUSS DESC. JT-39002	E-19112589(2)

Alpa Roof Truss, Maple

Version 8.300 S Aug 9 2019 MiTek Industries, Inc. Mon Nov 11 15:04:50 2019 Page 2
ID:MF8iiriaTok7DlbpT4B71Xys4PG-hmUVMiSgKdkFZPk1B?ogp8qZf0oDYOVfbJ6o5NyKEKR

PLATES (table is in inches)

JT	TYPE	PLATES	W	LEN	Y	X
B	TMVW+p	MT20	4.0	6.0	2.00	2.00
C	TTWW+m	MT20	5.0	6.0	1.75	1.00
D	TMWW-t	MT20	4.0	4.0		
E	TS-t	MT20	3.0	6.0		
F	TMW+w	MT20	2.0	4.0		
G	TTWW+m	MT20	6.0	7.0	Edge	1.50
H	TMVW+p	MT20	4.0	6.0	2.00	2.00
I	BMV1+p	MT20	2.0	4.0		
J	BMWW-t	MT20	4.0	4.0		
K	BSWWW-l	MT20	7.0	8.0	4.50	4.00
L	BMWW-t	MT20	4.0	6.0		
M	BMWW-t	MT20	4.0	4.0		
N	BMV1+p	MT20	2.0	4.0		

Edge - INDICATES REFERENCE CORNER OF PLATE TOUCHES EDGE OF CHORD.

NAIL VALUES

PLATE	GRIP(DRY) (PSI) MAX	MIN	SHEAR (PLI) MAX	MIN	SECTION (PLI) MAX	MIN
MT20	618	354	1667	788	1987	1656

PLATE PLACEMENT TOL. = 0.250 inches

PLATE ROTATION TOL. = 5.0 Deg.

JSI GRIP= 0.85 (J) (INPUT = 0.90)
JSI METAL= 0.30 (K) (INPUT = 1.00)

NOTE: Lateral brace(s) shown shall be 2x4 SPF #2

LICENSED PROFESSIONAL ENGINEER
11/11/2019
R. TURENNE
100157040
PROVINCE OF ONTARIO

JOB NAME	TRUSS NAME	QUANTITY	PLY	JOB DESC.	DRWG NO.
313999	H10		1	TRUSS DESC. JT-39002	E-19112590

Alpa Roof Truss, Maple

Version 8.300 S Aug 9 2019 MiTek Industries, Inc. Mon Nov 11 15:04:52 2019 Page 1

ID:MF8iiriaTok7DlbpT4B71Xys4PG-e9cFmOTwsF_zoiuQJQr8uZvrMpYz0Dr22dbuAGyKEKP

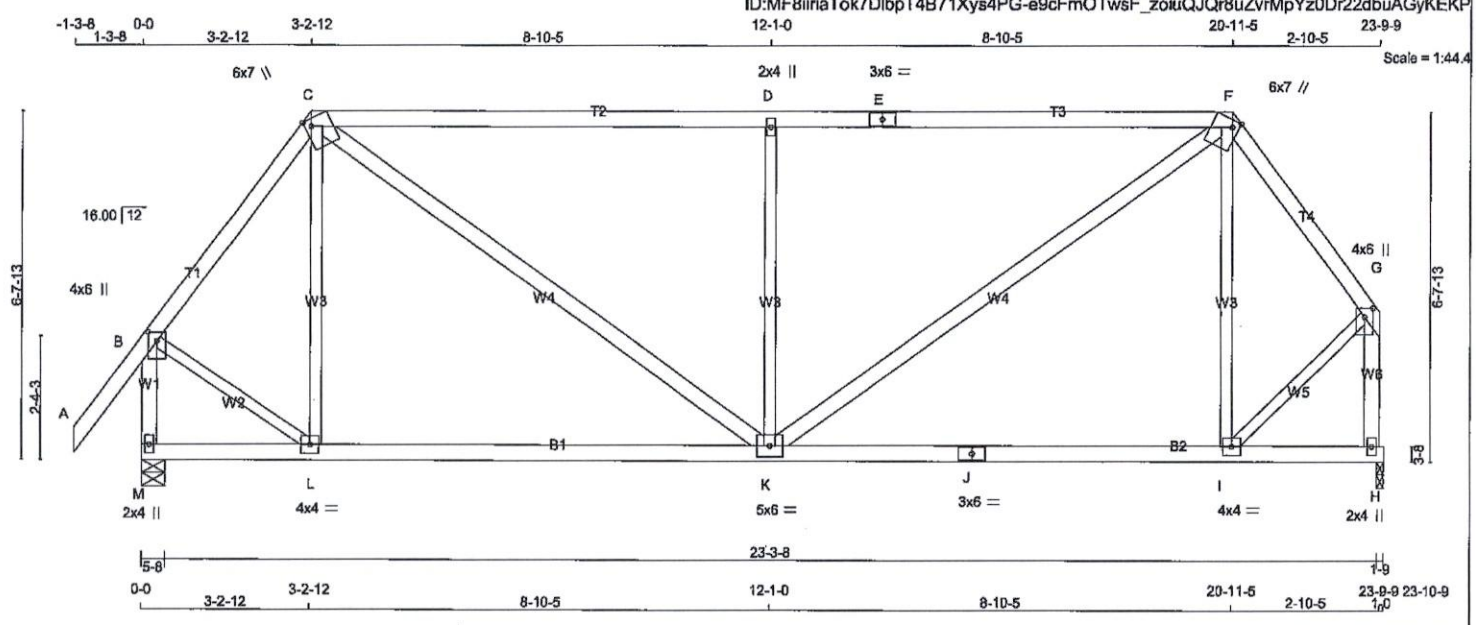

TOTAL WEIGHT = 112 lb

[M]

LUMBER

N. L. G. A. RULES

CHORDS	SIZE		LUMBER	DESCR.
A - C	2x4	DRY	No.2	SPF
C - E	2x4	DRY	2100F 1.8E	SPF
E - F	2x4	DRY	2100F 1.8E	SPF
F - G	2x4	DRY	No.2	SPF
M - B	2x4	DRY	No.2	SPF
H - G	2x4	DRY	No.2	SPF
M - J	2x4	DRY	No.2	SPF
J - H	2x4	DRY	No.2	SPF
ALL WEBS EXCEPT	2x3	DRY	No.2	SPF
C - K	2x4	DRY	No.2	SPF
K - F	2x4	DRY	No.2	SPF

DRY: SEASONED LUMBER.

PLATES (table is in inches)

JT	TYPE	PLATES	W	LEN	Y	X
B	TMVW+p	MT20	4.0	6.0	2.00	2.00
C	TTWW+m	MT20	6.0	7.0	Edge	1.50
D	TMW+w	MT20	2.0	4.0		
E	TS-t	MT20	3.0	6.0		
F	TTWW+m	MT20	6.0	7.0	Edge	1.50
G	TMVW+p	MT20	4.0	6.0	2.00	2.00
H	BMV1+p	MT20	2.0	4.0		
I	BMWW-t	MT20	4.0	4.0		
J	BS-t	MT20	3.0	6.0		
K	BMWWW-t	MT20	5.0	6.0		
L	BMWW-t	MT20	4.0	4.0		
M	BMV1+p	MT20	2.0	4.0		

Edge - INDICATES REFERENCE CORNER OF PLATE TOUCHES EDGE OF CHORD.

NOTE: Lateral brace(s) shown shall be 2x4 SPF #2

LICENSED PROFESSIONAL ENGINEER
11/11/2019
R. TURENNE
100157040
PROVINCE OF ONTARIO

DIMENSIONS, SUPPORTS AND LOADINGS SPECIFIED BY FABRICATOR TO BE VERIFIED BY BUILDING DESIGNER

BEARINGS

JT	FACTORED GROSS REACTION VERT	HORZ	MAXIMUM FACTORED GROSS REACTION DOWN	HORZ	UPLIFT	INPUT BRG IN-SX	REQRD BRG IN-SX
M	1349	0	1349	0	0	5-8	2-0
H	1230	0	1230	0	0	1-9	1-8

UNFACTORED REACTIONS

JT	1ST LCASE COMBINED	MAX./MIN. COMPONENT REACTIONS SNOW	LIVE	PERM.LIVE	WIND	DEAD	SOIL
M	956	620 / 0	0 / 0	0 / 0	0 / 0	336 / 0	0 / 0
H	873	554 / 0	0 / 0	0 / 0	0 / 0	319 / 0	0 / 0

BEARING MATERIAL TO BE SPF NO.2 OR BETTER AT JOINT(S) M, H

BRACING

TOP CHORD TO BE SHEATHED OR MAX. PURLIN SPACING = 5.09 FT.
MAX. UNBRACED BOTTOM CHORD LENGTH = 10.00 FT OR RIGID CEILING DIRECTLY APPLIED.

ALL PITCH BREAKS AND PERIMETER CORNER JOINTS MUST BE LATERALLY RESTRAINED.

LOADING

TOTAL LOAD CASES: (4)

CHORDS

MEMB. FR-TO	MAX. FACTORED FORCE (LBS)	FACTORED VERT. LOAD (PLF) FROM	TO	LC1 CSI (LC)	MAX UNBRAC LENGTH
A- B	0 / 48	-84.9	-84.9	0.12 (1)	10.00
B- C	-944 / 0	-84.9	-84.9	0.17 (1)	6.18
C- D	-1297 / 0	-84.9	-84.9	0.86 (1)	5.09
D- E	-1298 / 0	-84.9	-84.9	0.86 (1)	5.09
E- F	-1298 / 0	-84.9	-84.9	0.86 (1)	5.09
F- G	-857 / 0	-84.9	-84.9	0.13 (1)	6.25
M- B	-1345 / 0	0.0	0.0	0.17 (1)	6.99
H- G	-1233 / 0	0.0	0.0	0.19 (1)	7.23
M- L	0 / 0	-18.5	-18.5	0.20 (4)	10.00
L- K	0 / 559	-18.5	-18.5	0.36 (4)	10.00
K- J	0 / 505	-18.5	-18.5	0.36 (4)	10.00
J- I	0 / 505	-18.5	-18.5	0.36 (4)	10.00
I- H	0 / 0	-18.5	-18.5	0.21 (4)	10.00

WEBS

MEMB. FR-TO	MAX. FACTORED FORCE (LBS)	MAX CSI (LC)
L- C	-196 / 23	0.14 (1)
C- K	0 / 907	0.15 (1)
K- D	-921 / 0	0.67 (1)
K- F	0 / 972	0.16 (1)
I- F	-288 / 0	0.21 (1)
B- L	0 / 652	0.15 (1)
I- G	0 / 663	0.15 (1)

DESIGN CRITERIA

SPECIFIED LOADS:

TOP CH.	LL	=	23.3	PSF
	DL	=	6.0	PSF
BOT CH.	LL	=	0.0	PSF
	DL	=	7.4	PSF
TOTAL LOAD		=	36.7	PSF

SPACING = 24.0 IN. C/C

LOADING IN FLAT SECTION BASED ON A SLOPE OF 2.00/12 MINIMUM

THIS TRUSS IS DESIGNED FOR RESIDENTIAL OR SMALL BUILDING REQUIREMENTS OF PART 9, NBCC 2010, NBCC 2015

THIS DESIGN COMPLIES WITH:
- PART 9 OF BCBC 2018 , OBC 2012 , ABC 2019
- CSA 086-09, CSA 086-14
- TPIC 2011, TPIC 2014

(55 % OF 27.2 P.S.F. G.S.L. PLUS 8.4 P.S.F. RAIN LOAD) EQUALS 23.3 P.S.F. SPECIFIED ROOF LIVE LOAD

ALLOWABLE DEFL.(LL)= L/360 (0.79")
CALCULATED VERT. DEFL.(LL) = L/ 999 (0.03")
ALLOWABLE DEFL.(TL)= L/360 (0.79")
CALCULATED VERT. DEFL.(TL) = L/ 999 (0.12")

CSI: TC=0.86/1.00 (D-F:1) , BC=0.36/1.00 (K-L:4) , WB=0.67/1.00 (D-K:1) , SSI=0.36/1.00 (C-D:1)

DOL LUMBER=1.00 NAIL=1.00 LS BEND=1.10 COMP=1.10 SHEAR=1.10 TENS= 1.10

COMPANION LIVE LOAD FACTOR = 1.00

TRUSS PLATE MANUFACTURER IS NOT RESPONSIBLE FOR QUALITY CONTROL IN THE TRUSS MANUFACTURING PLANT .

NAIL VALUES

PLATE	GRIP(DRY) (PSI) MAX	MIN	SHEAR (PLI) MAX	MIN	SECTION (PLI) MAX	MIN
MT20	618	354	1667	788	1987	1656

PLATE PLACEMENT TOL. = 0.250 inches

PLATE ROTATION TOL. = 5.0 Deg.

JSI GRIP= 0.89 (K) (INPUT = 0.90)
JSI METAL= 0.37 (J) (INPUT = 1.00)

JOB NAME	TRUSS NAME	QUANTITY	PLY	JOB DESC.	DRWG NO.
313999	H11T		1	TRUSS DESC. JT-39002	E-19112591

Alpa Roof Truss, Maple

Version 8.300 S Aug 9 2019 MiTek Industries, Inc. Mon Nov 11 15:04:53 2019 Page 1
ID:MF8iiriaTok7DlbpT4B71Xys4PG-6L9e_kUYdY6pQsTct7MNRmS8pDwRlm5BHHLSilyKEKO

Scale = 1:90.9

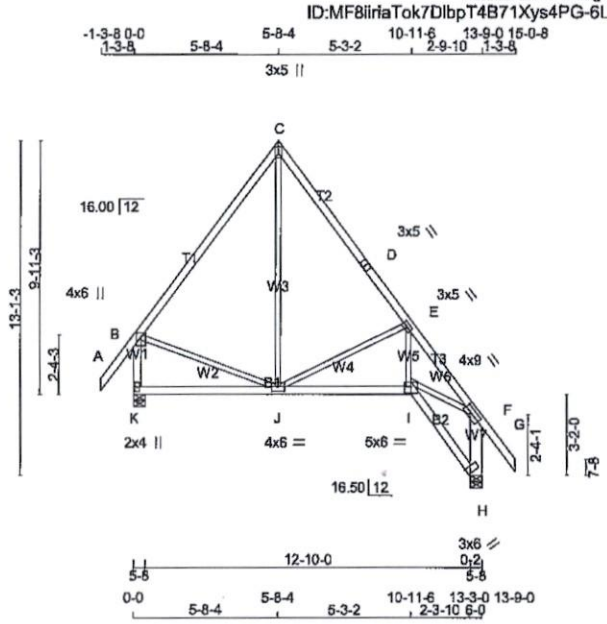

TOTAL WEIGHT = 2 X 77 = 154 lb

[M][F]

LUMBER

N. L. G. A. RULES

CHORDS	SIZE		LUMBER	DESCR.
A - C	2x4	DRY	1650F 1.5E	SPF
C - D	2x4	DRY	No.2	SPF
D - G	2x4	DRY	No.2	SPF
K - B	2x4	DRY	No.2	SPF
H - F	2x6	DRY	No.2	SPF
K - I	2x4	DRY	No.2	SPF
I - H	2x4	DRY	No.2	SPF
ALL WEBS EXCEPT	2x3	DRY	No.2	SPF

DRY: SEASONED LUMBER.

PLATES (table is in inches)

JT	TYPE	PLATES	W	LEN	Y	X
B	TMVW+p	MT20	4.0	6.0	2.00	2.00
C	TTW+p	MT20	3.0	5.0	2.00	Edge
D	TS-t	MT20	3.0	5.0		
E	TMWW-t	MT20	3.0	5.0	1.50	1.50
F	TMVW-t	MT20	4.0	9.0	2.00	3.00
H	BVM1+l	MT20	3.0	6.0	Edge	
I	BBWW-l	MT20	5.0	6.0	3.00	3.00
J	BMWWW-t	MT20	4.0	6.0		
K	BMV1+p	MT20	2.0	4.0		

Edge - INDICATES REFERENCE CORNER OF PLATE TOUCHES EDGE OF CHORD.

NOTE: Lateral brace(s) shown shall be 2x4 SPF #2

LICENSED PROFESSIONAL ENGINEER
11/11/2019
R. TURENNE
100157040
PROVINCE OF ONTARIO

DIMENSIONS, SUPPORTS AND LOADINGS SPECIFIED BY FABRICATOR TO BE VERIFIED BY BUILDING DESIGNER

BEARINGS

JT	FACTORED GROSS REACTION VERT	HORZ	MAXIMUM FACTORED GROSS REACTION DOWN	HORZ	UPLIFT	INPUT BRG IN-SX	REQRD BRG IN-SX
K	830	0	830	0	0	5-8	1-8
H	830	0	830	0	0	5-8 (5-6)	5-6

VALUE IN PARENTHESIS INDICATES EFFECTIVE BEARING LENGTH

BEVELED PLATE OR SHIM REQUIRED TO PROVIDE FULL BEARING SURFACE WITH TRUSS CHORD AT JT(S): H

UNFACTORED REACTIONS

JT	1ST LCASE COMBINED	MAX./MIN. COMPONENT REACTIONS SNOW	LIVE	PERM.LIVE	WIND	DEAD	SOIL
K	587	386 / 0	0 / 0	0 / 0	0 / 0	201 / 0	0 / 0
H	587	386 / 0	0 / 0	0 / 0	0 / 0	201 / 0	0 / 0

BEARING MATERIAL TO BE SPF NO.2 OR BETTER AT JOINT(S) K, H

BRACING

TOP CHORD TO BE SHEATHED OR MAX. PURLIN SPACING = 5.71 FT.
MAX. UNBRACED BOTTOM CHORD LENGTH = 10.00 FT OR RIGID CEILING DIRECTLY APPLIED.

ALL PITCH BREAKS AND PERIMETER CORNER JOINTS MUST BE LATERALLY RESTRAINED.

LOADING

TOTAL LOAD CASES: (4)

CHORDS

MEMB. FR-TO	MAX. FACTORED FORCE (LBS)	FACTORED VERT. LOAD LC1 (PLF) FROM	TO	MAX CSI (LC)	MAX. UNBRAC LENGTH
A- B	0 / 48	-84.9	-84.9	0.10 (1)	10.00
B- C	-425 / 0	-84.9	-84.9	0.30 (1)	6.25
C- D	-456 / 0	-84.9	-84.9	0.28 (1)	6.25
D- E	-456 / 0	-84.9	-84.9	0.28 (1)	6.25
E- F	-1132 / 0	-84.9	-84.9	0.23 (1)	5.71
F- G	0 / 48	-84.9	-84.9	0.12 (1)	10.00
K- B	-789 / 0	0.0	0.0	0.10 (1)	7.81
H- F	-804 / 0	0.0	0.0	0.08 (1)	7.81
K- J	0 / 0	-18.5	-18.5	0.16 (4)	10.00
J- I	0 / 697	-18.5	-18.5	0.22 (4)	10.00
I- H	0 / 0	-18.5	-18.5	0.04 (4)	10.00

WEBS

MEMB. FR-TO	MAX. FACTORED FORCE (LBS)	MAX CSI (LC)
J- C	0 / 259	0.06 (4)
J- E	-497 / 0	0.29 (1)
I- E	0 / 389	0.09 (1)
B- J	0 / 270	0.06 (1)
I- F	0 / 781	0.18 (1)

DESIGN CRITERIA

SPECIFIED LOADS:

TOP CH.	LL	=	23.3	PSF
	DL	=	6.0	PSF
BOT CH.	LL	=	0.0	PSF
	DL	=	7.4	PSF
TOTAL LOAD		=	36.7	PSF

SPACING = 24.0 IN. C/C

THIS TRUSS IS DESIGNED FOR RESIDENTIAL OR SMALL BUILDING REQUIREMENTS OF PART 9, NBCC 2010, NBCC 2015

THIS DESIGN COMPLIES WITH:
- PART 9 OF BCBC 2018 , OBC 2012 , ABC 2019
- CSA 086-09, CSA 086-14
- TPIC 2011, TPIC 2014

(55 % OF 27.2 P.S.F. G.S.L. PLUS 8.4 P.S.F. RAIN LOAD) EQUALS 23.3 P.S.F. SPECIFIED ROOF LIVE LOAD

ALLOWABLE DEFL.(LL)= L/360 (0.46")
CALCULATED VERT. DEFL.(LL) = L/ 999 (0.02")
ALLOWABLE DEFL.(TL)= L/360 (0.46")
CALCULATED VERT. DEFL.(TL) = L/ 999 (0.05")

CSI: TC=0.30/1.00 (B-C:1) , BC=0.22/1.00 (I-J:4) , WB=0.29/1.00 (E-J:1) , SSI=0.12/1.00 (C-E:1)

DOL LUMBER=1.00 NAIL=1.00 LS BEND=1.10 COMP=1.10 SHEAR=1.10 TENS= 1.10

COMPANION LIVE LOAD FACTOR = 1.00

AUTOSOLVE LEFT HEEL ONLY

TRUSS PLATE MANUFACTURER IS NOT RESPONSIBLE FOR QUALITY CONTROL IN THE TRUSS MANUFACTURING PLANT .

NAIL VALUES

PLATE	GRIP(DRY) (PSI) MAX	MIN	SHEAR (PLI) MAX	MIN	SECTION (PLI) MAX	MIN
MT20	618	354	1667	788	1987	1656

PLATE PLACEMENT TOL. = 0.250 inches

PLATE ROTATION TOL. = 5.0 Deg.

JSI GRIP= 0.81 (D) (INPUT = 0.90)
JSI METAL= 0.31 (I) (INPUT = 1.00)

JOB NAME	TRUSS NAME	QUANTITY	PLY	JOB DESC.	DRWG NO.
313999	H11TG		1	TRUSS DESC. JT-39002	E-19112592

Alpa Roof Truss, Maple

Version 8.300 S Aug 9 2019 MiTek Industries, Inc. Mon Nov 11 15:04:54 2019 Page 1
ID:MF8iiriaTok7DlbpT4B71Xys4PG-aXj0B4VAOsEg101oQrtcz__JZdGgUDLLWx4?E8yKEKN

-1-3-8 0-0 1-8-4 3-8-4 5-8-4 7-8-4 9-8-4 10-11-6 11-8-4 13-9-0 15-0-8
1-3-8 1-8-4 2-0-0 2-0-0 2-0-0 2-0-0 1-3-2 8-14 2-0-12 1-3-8

3x5 ||

Scale = 1:90.9

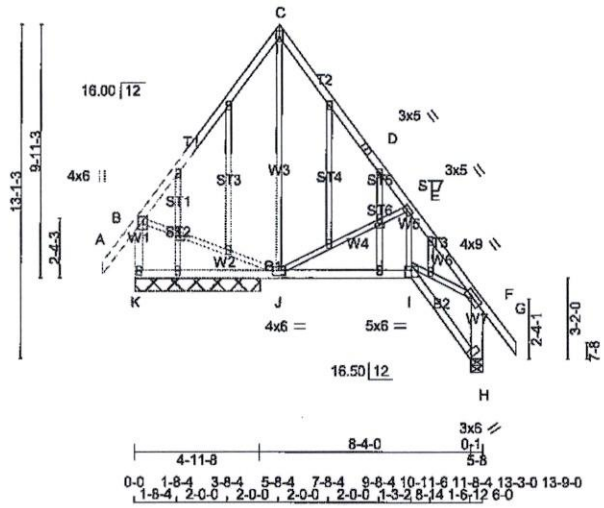

TOTAL WEIGHT = 93 lb

[M][F]

LUMBER

N. L. G. A. RULES

CHORDS	SIZE		LUMBER	DESCR.
A - C	2x4	DRY	1650F 1.5E	SPF
C - D	2x4	DRY	No.2	SPF
D - G	2x4	DRY	No.2	SPF
K - B	2x4	DRY	No.2	SPF
H - F	2x6	DRY	No.2	SPF
K - I	2x4	DRY	No.2	SPF
I - H	2x4	DRY	No.2	SPF
ALL WEBS	2x3	DRY	No.2	SPF
EXCEPT				
ALL GABLE WEBS	2x3	DRY	No.2	SPF

DRY: SEASONED LUMBER.

GABLE STUDS SPACED AT 2-0-0 OC.

PLATES (table is in inches)

JT	TYPE	PLATES	W	LEN	Y	X
B	TMVW+p	MT20	4.0	6.0	2.00	2.00
C	TTW+p	MT20	3.0	5.0	2.00	Edge
D	TS-t	MT20	3.0	5.0		
E	TMWW-t	MT20	3.0	5.0	1.50	1.50
F	TMVW-t	MT20	4.0	9.0	2.00	3.00
H	BVM1+l	MT20	3.0	6.0	Edge	
I	BBWW-l	MT20	5.0	6.0	3.00	3.00
J	BMWWW-t	MT20	4.0	6.0		
K	BMV1+p	MT20	2.0	4.0		
L, M, N, O, P, Q, R, S, T, U, V, W						
L	NP+w	MT20	2.0	4.0		
N	NP-p	MT20	2.0	4.0	1.00	1.75
U	NP-p	MT20	2.0	4.0	0.75	2.00

Edge - INDICATES REFERENCE CORNER OF PLATE TOUCHES EDGE OF CHORD.

NOTE: Lateral brace(s) shown shall be 2x4 SPF #2

LICENSED PROFESSIONAL ENGINEER
11/11/2019
R. TURENNE
100157040
PROVINCE OF ONTARIO

DIMENSIONS, SUPPORTS AND LOADINGS SPECIFIED BY FABRICATOR TO BE VERIFIED BY BUILDING DESIGNER

BEARINGS

JT	FACTORED GROSS REACTION VERT	HORZ	MAXIMUM FACTORED GROSS REACTION DOWN	HORZ	UPLIFT	INPUT BRG IN-SX	REQRD BRG IN-SX
K	830	0	830	0	0	4-11-8	1-1-5
H	830	0	830	0	0	5-8 (5-7)	5-7

VALUE IN PARENTHESIS INDICATES EFFECTIVE BEARING LENGTH

BEVELED PLATE OR SHIM REQUIRED TO PROVIDE FULL BEARING SURFACE WITH TRUSS CHORD AT JT(S): H

UNFACTORED REACTIONS

JT	1ST LCASE COMBINED	MAX./MIN. COMPONENT REACTIONS SNOW	LIVE	PERM.LIVE	WIND	DEAD	SOIL
K	587	386 / 0	0 / 0	0 / 0	0 / 0	201 / 0	0 / 0
H	587	386 / 0	0 / 0	0 / 0	0 / 0	201 / 0	0 / 0

BEARING MATERIAL TO BE SPF NO.2 OR BETTER AT JOINT(S) K, H

BRACING

TOP CHORD TO BE SHEATHED OR MAX. PURLIN SPACING = 5.71 FT.
MAX. UNBRACED BOTTOM CHORD LENGTH = 10.00 FT OR RIGID CEILING DIRECTLY APPLIED.

ALL PITCH BREAKS AND PERIMETER CORNER JOINTS MUST BE LATERALLY RESTRAINED.

LOADING

TOTAL LOAD CASES: (4)

CHORDS

MEMB. FR-TO	MAX. FACTORED FORCE (LBS)	FACTORED VERT. LOAD LC1 (PLF) FROM	TO	MAX CSI (LC)	MAX. UNBRAC LENGTH
A- B	0 / 48	-84.9	-84.9	0.10 (1)	10.00
B- C	-425 / 0	-84.9	-84.9	0.30 (1)	6.25
C- D	-456 / 0	-84.9	-84.9	0.28 (1)	6.25
D- E	-456 / 0	-84.9	-84.9	0.28 (1)	6.25
E- F	-1132 / 0	-84.9	-84.9	0.23 (1)	5.71
F- G	0 / 48	-84.9	-84.9	0.12 (1)	10.00
K- B	-789 / 0	0.0	0.0	0.10 (1)	7.81
H- F	-804 / 0	0.0	0.0	0.08 (1)	7.81
K- J	0 / 0	-18.5	-18.5	0.16 (4)	10.00
J- I	0 / 697	-18.5	-18.5	0.22 (4)	10.00
I- H	0 / 0	-18.5	-18.5	0.04 (4)	10.00

WEBS

MEMB. FR-TO	MAX. FACTORED FORCE (LBS)	MAX CSI (LC)
J- C	0 / 259	0.06 (4)
J- E	-497 / 0	0.29 (1)
I- E	0 / 389	0.09 (1)
B- J	0 / 270	0.06 (1)
I- F	0 / 781	0.18 (1)

DESIGN CRITERIA

SPECIFIED LOADS:

TOP CH.	LL	=	23.3	PSF
	DL	=	6.0	PSF
BOT CH.	LL	=	0.0	PSF
	DL	=	7.4	PSF
TOTAL LOAD		=	36.7	PSF

SPACING = 24.0 IN. C/C

THIS TRUSS IS DESIGNED FOR RESIDENTIAL OR SMALL BUILDING REQUIREMENTS OF PART 9, NBCC 2010, NBCC 2015

THIS DESIGN COMPLIES WITH:
- PART 9 OF BCBC 2018 , OBC 2012 , ABC 2019
- CSA 086-09, CSA 086-14
- TPIC 2011, TPIC 2014

(55 % OF 27.2 P.S.F. G.S.L. PLUS 8.4 P.S.F. RAIN LOAD) EQUALS 23.3 P.S.F. SPECIFIED ROOF LIVE LOAD

ALLOWABLE DEFL.(LL)= L/360 (0.46")
CALCULATED VERT. DEFL.(LL) = L/ 999 (0.02")
ALLOWABLE DEFL.(TL)= L/360 (0.46")
CALCULATED VERT. DEFL.(TL) = L/ 999 (0.05")

CSI: TC=0.30/1.00 (B-C:1) , BC=0.22/1.00 (I-J:4) , WB=0.29/1.00 (E-J:1) , SSI=0.12/1.00 (C-E:1)

DOL LUMBER=1.00 NAIL=1.00 LS BEND=1.10 COMP=1.10 SHEAR=1.10 TENS= 1.10

COMPANION LIVE LOAD FACTOR = 1.00

AUTOSOLVE LEFT HEEL ONLY

TRUSS PLATE MANUFACTURER IS NOT RESPONSIBLE FOR QUALITY CONTROL IN THE TRUSS MANUFACTURING PLANT .

NAIL VALUES

PLATE	GRIP(DRY) (PSI) MAX	MIN	SHEAR (PLI) MAX	MIN	SECTION (PLI) MAX	MIN
MT20	618	354	1667	788	1987	1656

PLATE PLACEMENT TOL. = 0.250 Inches

PLATE ROTATION TOL. = 5.0 Deg.

JSI GRIP= 0.81 (D) (INPUT = 0.90)
JSI METAL= 0.31 (I) (INPUT = 1.00)

JOB NAME	TRUSS NAME	QUANTITY	PLY	JOB DESC.	DRWG NO.
313999	H12		1	TRUSS DESC. JT-39002	E-19112593

Alpa Roof Truss, Maple

Version 8.300 S Aug 9 2019 MiTek Industries, Inc. Mon Nov 11 15:04:56 2019 Page 1
ID:MF8iiriaTok7DlbpT4B71Xys4PG-WwrmcmWRvTVOHKBBYGv43P4f3Qy8y8OezFZ6J1yKEKL

Scale = 1:69.1

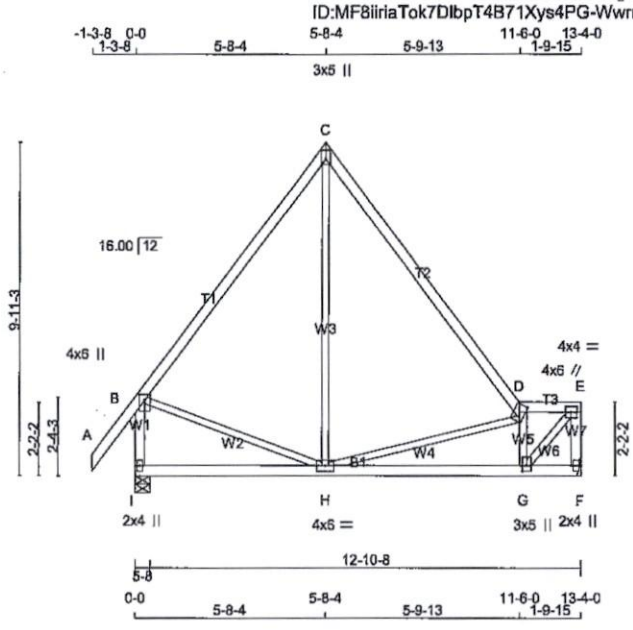

TOTAL WEIGHT = 3 X 66 = 199 lb

[M][F]

LUMBER

N. L. G. A. RULES

CHORDS	SIZE		LUMBER	DESCR.
A - C	2x4	DRY	1650F 1.5E	SPF
C - D	2x4	DRY	2100F 1.8E	SPF
D - E	2x4	DRY	No.2	SPF
F - E	2x4	DRY	No.2	SPF
I - B	2x4	DRY	No.2	SPF
I - F	2x4	DRY	No.2	SPF
ALL WEBS EXCEPT	2x3	DRY	No.2	SPF

DRY: SEASONED LUMBER.

PLATES (table is in inches)

JT	TYPE	PLATES	W	LEN	Y	X
B	TMVW+p	MT20	4.0	6.0	2.00	2.00
C	TTW+p	MT20	3.0	5.0	2.00	Edge
D	TTWW+m	MT20	4.0	6.0	2.75	2.00
E	TMVW-t	MT20	4.0	4.0		
F	BMV1+p	MT20	2.0	4.0		
G	BMWW+t	MT20	3.0	5.0	2.00	1.50
H	BMWWW-t	MT20	4.0	6.0		
I	BMV1+p	MT20	2.0	4.0		

Edge - INDICATES REFERENCE CORNER OF PLATE TOUCHES EDGE OF CHORD.

NOTE: Lateral brace(s) shown shall be 2x4 SPF #2

LICENSED PROFESSIONAL ENGINEER
11/11/2019
R. TURENNE
100157040
PROVINCE OF ONTARIO

DIMENSIONS, SUPPORTS AND LOADINGS SPECIFIED BY FABRICATOR TO BE VERIFIED BY BUILDING DESIGNER

BEARINGS

JT	FACTORED GROSS REACTION VERT	HORZ	MAXIMUM FACTORED GROSS REACTION DOWN	HORZ	UPLIFT	INPUT BRG IN-SX	REQRD BRG IN-SX
F	689	0	689	0	0	MECHANICAL	
I	809	0	809	0	0	5-8	1-8

A SUITABLE HANGER/MECHANICAL CONNECTION IS REQUIRED AT JOINT F. MINIMUM BEARING LENGTH AT JOINT F = 1-8.

UNFACTORED REACTIONS

JT	1ST LCASE COMBINED	MAX./MIN. COMPONENT REACTIONS SNOW	LIVE	PERM.LIVE	WIND	DEAD	SOIL
F	489	310 / 0	0 / 0	0 / 0	0 / 0	179 / 0	0 / 0
I	572	376 / 0	0 / 0	0 / 0	0 / 0	196 / 0	0 / 0

BEARING MATERIAL TO BE SPF NO.2 OR BETTER AT JOINT(S) I

BRACING

TOP CHORD TO BE SHEATHED OR MAX. PURLIN SPACING = 6.25 FT.
MAX. UNBRACED BOTTOM CHORD LENGTH = 10.00 FT OR RIGID CEILING DIRECTLY APPLIED.

ALL PITCH BREAKS AND PERIMETER CORNER JOINTS MUST BE LATERALLY RESTRAINED.

LOADING

TOTAL LOAD CASES: (4)

CHORDS

MEMB. FR-TO	MAX. FORCE (LBS)	FACTORED VERT. LOAD LC1 (PLF) FROM	TO	MAX CSI (LC)	MAX. UNBRAC LENGTH
A- B	0 / 48	-84.9	-84.9	0.10 (1)	10.00
B- C	-405 / 0	-84.9	-84.9	0.30 (1)	6.25
C- D	-403 / 0	-84.9	-84.9	0.24 (1)	6.25
D- E	-568 / 0	-84.9	-84.9	0.04 (1)	6.25
F- E	-683 / 0	0.0	0.0	0.08 (1)	7.81
I- B	-768 / 0	0.0	0.0	0.10 (1)	7.81
I- H	0 / 0	-18.5	-18.5	0.16 (4)	10.00
H- G	0 / 599	-18.5	-18.5	0.22 (4)	10.00
G- F	0 / 0	-18.5	-18.5	0.07 (4)	10.00

WEBS

MEMB. FR-TO	MAX. FORCE (LBS)	MAX CSI (LC)
H- C	0 / 157	0.05 (4)
H- D	-373 / 0	0.25 (1)
G- D	-549 / 0	0.08 (1)
G- E	0 / 841	0.19 (1)
B- H	0 / 257	0.06 (1)

DESIGN CRITERIA

SPECIFIED LOADS:

TOP CH.	LL	=	23.3	PSF
	DL	=	6.0	PSF
BOT CH.	LL	=	0.0	PSF
	DL	=	7.4	PSF
TOTAL LOAD		=	36.7	PSF

SPACING = 24.0 IN. C/C

LOADING IN ALL FLAT SECTIONS BASED ON A SLOPE OF 2.00/12 MINIMUM

THIS TRUSS IS DESIGNED FOR RESIDENTIAL OR SMALL BUILDING REQUIREMENTS OF PART 9, NBCC 2010, NBCC 2015

THIS DESIGN COMPLIES WITH:
- PART 9 OF BCBC 2018 , OBC 2012 , ABC 2019
- CSA 086-09, CSA 086-14
- TPIC 2011, TPIC 2014

(55 % OF 27.2 P.S.F. G.S.L. PLUS 8.4 P.S.F. RAIN LOAD) EQUALS 23.3 P.S.F. SPECIFIED ROOF LIVE LOAD

ALLOWABLE DEFL.(LL)= L/360 (0.44")
CALCULATED VERT. DEFL.(LL) = L/ 999 (0.01")
ALLOWABLE DEFL.(TL)= L/360 (0.44")
CALCULATED VERT. DEFL.(TL) = L/ 999 (0.04")

CSI: TC=0.30/1.00 (B-C:1) , BC=0.22/1.00 (G-H:4) , WB=0.25/1.00 (D-H:1) , SSI=0.12/1.00 (C-D:1)

DOL LUMBER=1.00 NAIL=1.00 LS BEND=1.10 COMP=1.10 SHEAR=1.10 TENS= 1.10

COMPANION LIVE LOAD FACTOR = 1.00

TRUSS PLATE MANUFACTURER IS NOT RESPONSIBLE FOR QUALITY CONTROL IN THE TRUSS MANUFACTURING PLANT .

NAIL VALUES

PLATE	GRIP(DRY) (PSI) MAX	MIN	SHEAR (PLI) MAX	MIN	SECTION (PLI) MAX	MIN
MT20	618	354	1667	788	1987	1656

PLATE PLACEMENT TOL. = 0.250 Inches

PLATE ROTATION TOL. = 5.0 Deg.

JSI GRIP= 0.87 (E) (INPUT = 0.90)
JSI METAL= 0.35 (G) (INPUT = 1.00)

JOB NAME	TRUSS NAME	QUANTITY	PLY	JOB DESC.	DRWG NO.
313999	H13TG		1	TRUSS DESC. JT-39002	E-19112594

Alpa Roof Truss, Maple

Version 8.300 S Aug 9 2019 MiTek Industries, Inc. Mon Nov 11 15:04:58 2019 Page 1

ID:MF8iiriaTok7DlbpT4B71Xys4PG-SJzX1RYhR5I6WdLafgxY8q92IEg3Q5AxRZ2DNvyKEKJ

-1-3-8 0-0 2-5-8 2-9-10 4-5-8 6-1-6 6-5-8 8-11-0 10-2-8
1-3-8 2-5-8 4-2 1-7-14 1-7-14 4-2 2-5-8 1-3-8

Scale: 3/16"=1'

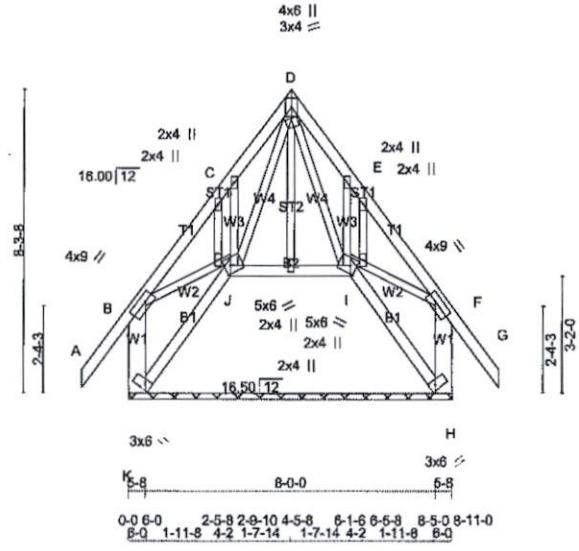

TOTAL WEIGHT = 67 lb

[M]

LUMBER

N. L. G. A. RULES

CHORDS	SIZE		LUMBER	DESCR.
A - D	2x4	DRY	No.2	SPF
D - G	2x4	DRY	No.2	SPF
K - B	2x6	DRY	No.2	SPF
H - F	2x6	DRY	No.2	SPF
K - J	2x4	DRY	No.2	SPF
J - I	2x4	DRY	No.2	SPF
I - H	2x4	DRY	No.2	SPF

ALL WEBS 2x3 DRY No.2 SPF
EXCEPT

ALL GABLE WEBS
2x3 DRY No.2 SPF

DRY: SEASONED LUMBER.

GABLE STUDS SPACED AT 2-0-0 OC.

PLATES (table is in inches)

JT	TYPE	PLATES	W	LEN	Y	X
B	TMVW-t	MT20	4.0	9.0	2.00	3.00
C	TMW+w	MT20	2.0	4.0		
D	TTWW+p	MT20	4.0	6.0		
D	NP+t	MT20	3.0	4.0	2.00	0.25
E	TMW+w	MT20	2.0	4.0		
F	TMVW-t	MT20	4.0	9.0	2.00	3.00
H	BVM1+l	MT20	3.0	6.0	Edge	
I	BBWWW1-m	MT20	5.0	6.0	2.50	2.00
I, J, L, M, N						
I	NP+w	MT20	2.0	4.0		
J	BBWWW1-m	MT20	5.0	6.0	2.50	2.00
K	BVM1+l	MT20	3.0	6.0	Edge	

Edge - INDICATES REFERENCE CORNER OF PLATE TOUCHES EDGE OF CHORD.

NOTE: Lateral brace(s) shown shall be 2x4 SPF #2

DIMENSIONS, SUPPORTS AND LOADINGS SPECIFIED BY FABRICATOR TO BE VERIFIED BY BUILDING DESIGNER

BEARINGS

JT	FACTORED GROSS REACTION VERT	HORZ	MAXIMUM FACTORED GROSS REACTION DOWN	HORZ	UPLIFT	INPUT BRG IN-SX	REQRD BRG IN-SX
K	243	0	243	0	0	8-11-0 (5-7-6)	3-4
J	337	0	337	0	0	8-11-0 (5-7-6)	3-4
I	337	0	337	0	0	8-11-0 (5-7-6)	3-4
H	243	0	243	0	0	8-11-0 (5-7-6)	3-4

VALUE IN PARENTHESIS INDICATES EFFECTIVE BEARING LENGTH

UNFACTORED REACTIONS

JT	1ST LCASE COMBINED	MAX./MIN. COMPONENT REACTIONS SNOW	LIVE	PERM.LIVE	WIND	DEAD	SOIL
K	171	119 / 0	0 / 0	0 / 0	0 / 0	51 / 0	0 / 0
J	239	154 / 0	0 / 0	0 / 0	0 / 0	85 / 0	0 / 0
I	239	154 / 0	0 / 0	0 / 0	0 / 0	85 / 0	0 / 0
H	171	119 / 0	0 / 0	0 / 0	0 / 0	51 / 0	0 / 0

BEARING MATERIAL TO BE SPF NO.2 OR BETTER AT JOINT(S) K, J, I, H

BRACING

TOP CHORD TO BE SHEATHED OR MAX. PURLIN SPACING = 6.25 FT.
MAX. UNBRACED BOTTOM CHORD LENGTH = 10.00 FT OR RIGID CEILING DIRECTLY APPLIED.

ALL PITCH BREAKS AND PERIMETER CORNER JOINTS MUST BE LATERALLY RESTRAINED.

LOADING

TOTAL LOAD CASES: (4)

CHORDS

MEMB. FR-TO	MAX. FACTORED FORCE (LBS)	FACTORED VERT. LOAD LC1 (PLF) FROM	TO	MAX CSI (LC)	MAX. UNBRAC LENGTH
A- B	0 / 48	-84.9	-84.9	0.12 (1)	10.00
B- C	0 / 15	-84.9	-84.9	0.09 (1)	10.00
C- D	-30 / 0	-84.9	-84.9	0.08 (1)	6.25
D- E	-30 / 0	-84.9	-84.9	0.08 (1)	6.25
E- F	0 / 15	-84.9	-84.9	0.09 (1)	10.00
F- G	0 / 48	-84.9	-84.9	0.12 (1)	10.00
K- B	-217 / 0	0.0	0.0	0.02 (1)	7.81
H- F	-217 / 0	0.0	0.0	0.02 (1)	7.81
K- J	0 / 0	-18.5	-18.5	0.04 (4)	10.00
J- I	0 / 12	-18.5	-18.5	0.06 (4)	10.00
I- H	0 / 0	-18.5	-18.5	0.04 (4)	10.00

WEBS

MEMB. FR-TO	MAX. FACTORED FORCE (LBS)	MAX CSI (LC)
D- I	-36 / 0	0.01 (1)
I- E	-246 / 0	0.04 (1)
J- D	-36 / 0	0.01 (1)
J- C	-246 / 0	0.04 (1)
B- J	0 / 2	0.00 (1)
I- F	0 / 2	0.00 (1)

DESIGN CRITERIA

SPECIFIED LOADS:

TOP CH.	LL	=	23.3	PSF
	DL	=	6.0	PSF
BOT CH.	LL	=	0.0	PSF
	DL	=	7.4	PSF
TOTAL LOAD		=	36.7	PSF

SPACING = 24.0 IN. C/C

THIS TRUSS IS DESIGNED FOR RESIDENTIAL OR SMALL BUILDING REQUIREMENTS OF PART 9, NBCC 2010, NBCC 2015

THIS DESIGN COMPLIES WITH:
- PART 9 OF BCBC 2018 , OBC 2012 , ABC 2019
- CSA 086-09, CSA 086-14
- TPIC 2011, TPIC 2014

(55 % OF 27.2 P.S.F. G.S.L. PLUS 8.4 P.S.F. RAIN LOAD) EQUALS 23.3 P.S.F. SPECIFIED ROOF LIVE LOAD

CSI: TC=0.12/1.00 (A-B:1) , BC=0.06/1.00 (I-J:4) , WB=0.04/1.00 (E-I:1) , SSI=0.07/1.00 (E-F:1)

DOL LUMBER=1.00 NAIL=1.00 LS BEND=1.10 COMP=1.10 SHEAR=1.10 TENS= 1.10

COMPANION LIVE LOAD FACTOR = 1.00

AUTOSOLVE HEELS OFF

TRUSS PLATE MANUFACTURER IS NOT RESPONSIBLE FOR QUALITY CONTROL IN THE TRUSS MANUFACTURING PLANT .

NAIL VALUES

PLATE	GRIP(DRY) (PSI) MAX	MIN	SHEAR (PLI) MAX	MIN	SECTION (PLI) MAX	MIN
MT20	618	354	1667	788	1987	1656

PLATE PLACEMENT TOL. = 0.250 inches

PLATE ROTATION TOL. = 5.0 Deg.

JSI GRIP= 0.22 (E) (INPUT = 0.90)
JSI METAL= 0.12 (C) (INPUT = 1.00)

JOB NAME	TRUSS NAME	QUANTITY	PLY	JOB DESC.	DRWG NO.
313999	H14S		1	TRUSS DESC. JT-39002	E-19112595

Alpa Roof Truss, Maple

Version 8.300 S Aug 9 2019 MiTek Industries, Inc. Mon Nov 11 15:04:59 2019 Page 1
ID:MF8iIrIaTok7DIbpT4B71Xys4PG-wVXvEnZJCOtz8nwmDOTng1iCOeyB9Ov4fDomwMyKEKI

Scale = 1:75.2

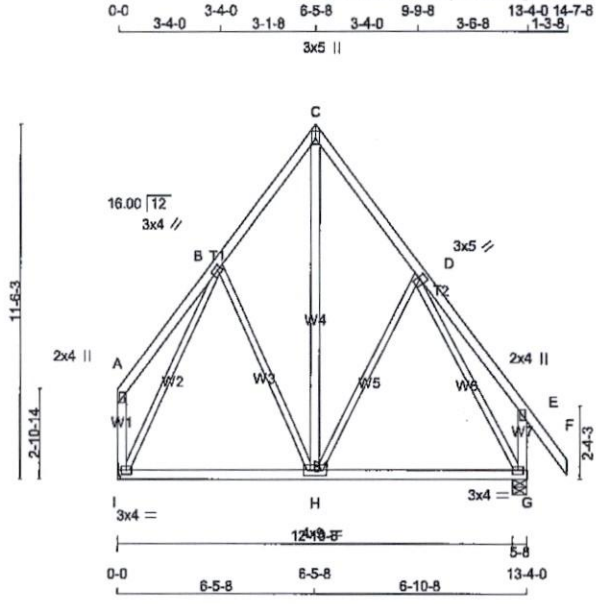

TOTAL WEIGHT = 3 X 84 = 253 lb

[M][F]

LUMBER

N. L. G. A. RULES

CHORDS	SIZE		LUMBER	DESCR.
A - C	2x4	DRY	No.2	SPF
C - F	2x4	DRY	No.2	SPF
I - A	2x4	DRY	No.2	SPF
G - E	2x4	DRY	No.2	SPF
I - G	2x4	DRY	No.2	SPF
ALL WEBS	2x3	DRY	No.2	SPF
EXCEPT				
H - C	2x4	DRY	No.2	SPF

DRY: SEASONED LUMBER.

PLATES (table is in inches)

JT	TYPE	PLATES	W	LEN	Y	X
A	TMV+p	MT20	2.0	4.0		
B	TMWW-t	MT20	3.0	4.0	1.50	1.50
C	TTW+p	MT20	3.0	5.0	2.00	Edge
D	TMWW+t	MT20	3.0	5.0	2.25	0.75
E	TMV+p	MT20	2.0	4.0		
G	BMVW1-t	MT20	3.0	4.0		
H	BMWWW-t	MT20	4.0	9.0		
I	BMVW1-t	MT20	3.0	4.0		

Edge - INDICATES REFERENCE CORNER OF PLATE TOUCHES EDGE OF CHORD.

NOTE: Lateral brace(s) shown shall be 2x4 SPF #2

LICENSED PROFESSIONAL ENGINEER
11/11/2019
R. TURENNE
100157040
PROVINCE OF ONTARIO

DIMENSIONS, SUPPORTS AND LOADINGS SPECIFIED BY FABRICATOR TO BE VERIFIED BY BUILDING DESIGNER

BEARINGS

JT	FACTORED GROSS REACTION VERT	HORZ	MAXIMUM FACTORED GROSS REACTION DOWN	HORZ	UPLIFT	INPUT BRG IN-SX	REQRD BRG IN-SX
I	689	0	689	0	0	MECHANICAL	
G	809	0	809	0	0	5-8	1-8

A SUITABLE HANGER/MECHANICAL CONNECTION IS REQUIRED AT JOINT I. MINIMUM BEARING LENGTH AT JOINT I = 1-8.

UNFACTORED REACTIONS

JT	1ST LCASE COMBINED	MAX./MIN. COMPONENT REACTIONS SNOW	LIVE	PERM.LIVE	WIND	DEAD	SOIL
I	489	310 / 0	0 / 0	0 / 0	0 / 0	179 / 0	0 / 0
G	572	376 / 0	0 / 0	0 / 0	0 / 0	196 / 0	0 / 0

BEARING MATERIAL TO BE SPF NO.2 OR BETTER AT JOINT(S) G

BRACING

TOP CHORD TO BE SHEATHED OR MAX. PURLIN SPACING = 6.25 FT.
MAX. UNBRACED BOTTOM CHORD LENGTH = 10.00 FT OR RIGID CEILING DIRECTLY APPLIED.

ALL PITCH BREAKS AND PERIMETER CORNER JOINTS MUST BE LATERALLY RESTRAINED.

LOADING

TOTAL LOAD CASES: (4)

CHORDS

MEMB. FR-TO	MAX. FACTORED FORCE (LBS)	FACTORED VERT. LOAD LC1 (PLF) FROM	TO	MAX CSI (LC)	MAX. UNBRAC LENGTH
A- B	0 / 25	-84.9	-84.9	0.14 (1)	10.00
B- C	-384 / 0	-84.9	-84.9	0.11 (1)	6.25
C- D	-385 / 0	-84.9	-84.9	0.13 (1)	6.25
D- E	0 / 28	-84.9	-84.9	0.16 (1)	10.00
E- F	0 / 48	-84.9	-84.9	0.12 (1)	10.00
I- A	-107 / 0	0.0	0.0	0.02 (1)	7.81
G- E	-228 / 0	0.0	0.0	0.03 (1)	7.81
I- H	0 / 255	-18.5	-18.5	0.26 (4)	10.00
H- G	0 / 278	-18.5	-18.5	0.26 (4)	10.00

WEBS

MEMB. FR-TO	MAX. FACTORED FORCE (LBS)	MAX CSI (LC)
B- H	-96 / 0	0.11 (1)
H- C	0 / 354	0.06 (1)
H- D	-131 / 0	0.14 (1)
I- B	-595 / 0	0.65 (1)
D- G	-600 / 0	0.62 (1)

DESIGN CRITERIA

SPECIFIED LOADS:

TOP CH.	LL =	23.3	PSF
	DL =	6.0	PSF
BOT CH.	LL =	0.0	PSF
	DL =	7.4	PSF
TOTAL LOAD	=	36.7	PSF

SPACING = 24.0 IN. C/C

THIS TRUSS IS DESIGNED FOR RESIDENTIAL OR SMALL BUILDING REQUIREMENTS OF PART 9, NBCC 2010, NBCC 2015

THIS DESIGN COMPLIES WITH:
- PART 9 OF BCBC 2018 , DBC 2012 , ABC 2019
- CSA 086-09, CSA 086-14
- TPIC 2011, TPIC 2014

(55 % OF 27.2 P.S.F. G.S.L. PLUS 8.4 P.S.F. RAIN LOAD) EQUALS 23.3 P.S.F. SPECIFIED ROOF LIVE LOAD

ALLOWABLE DEFL.(LL)= L/360 (0.44")
CALCULATED VERT. DEFL.(LL) = L/ 999 (0.01")
ALLOWABLE DEFL.(TL)= L/360 (0.44")
CALCULATED VERT. DEFL.(TL) = L/ 999 (0.06")

CSI: TC=0.16/1.00 (D-E:1) , BC=0.26/1.00 (G-H:4) , WB=0.65/1.00 (B-I:1) , SSI=0.11/1.00 (G-H:4)

DOL LUMBER=1.00 NAIL=1.00 LS BEND=1.10 COMP=1.10 SHEAR=1.10 TENS= 1.10

COMPANION LIVE LOAD FACTOR = 1.00

TRUSS PLATE MANUFACTURER IS NOT RESPONSIBLE FOR QUALITY CONTROL IN THE TRUSS MANUFACTURING PLANT .

NAIL VALUES

PLATE	GRIP(DRY) (PSI) MAX	MIN	SHEAR (PLI) MAX	MIN	SECTION (PLI) MAX	MIN
MT20	618	354	1667	788	1987	1656

PLATE PLACEMENT TOL. = 0.250 Inches

PLATE ROTATION TOL. = 5.0 Deg.

JSI GRIP= 0.79 (D) (INPUT = 0.90)
JSI METAL= 0.38 (D) (INPUT = 1.00)

JOB NAME	TRUSS NAME	QUANTITY	PLY	JOB DESC.	DRWG NO.
313999	H14T		1	TRUSS DESC. JT-39002	E-19112596

Alpa Roof Truss, Maple

Version 8.300 S Aug 9 2019 MiTek Industries, Inc. Mon Nov 11 15:05:01 2019 Page 1
ID:MF8IiriaTok7DlbpT4B71Xys4PG-Ph5HS7axzi?qlxVyn5_0DFEN72LfuyJDutXJSnyKEKH

Scale = 1:75.6

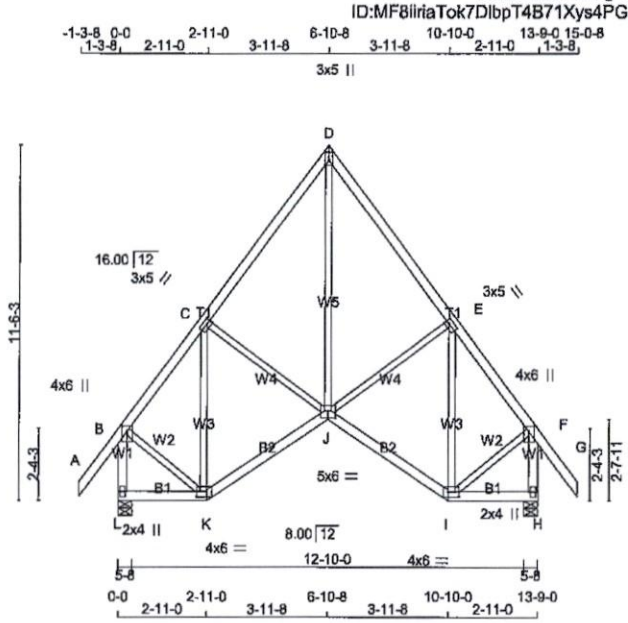

TOTAL WEIGHT = 2 X 83 = 165 lb

[M][F]

LUMBER

N. L. G. A. RULES

CHORDS	SIZE		LUMBER	DESCR.
A - D	2x4	DRY	No.2	SPF
D - G	2x4	DRY	No.2	SPF
L - B	2x4	DRY	No.2	SPF
H - F	2x4	DRY	No.2	SPF
L - K	2x4	DRY	No.2	SPF
K - J	2x4	DRY	No.2	SPF
J - I	2x4	DRY	No.2	SPF
I - H	2x4	DRY	No.2	SPF
ALL WEBS EXCEPT	2x3	DRY	No.2	SPF

DRY: SEASONED LUMBER.

PLATES (table is in inches)

JT	TYPE	PLATES	W	LEN	Y	X
B	TMVW+p	MT20	4.0	6.0	2.00	2.00
C	TMWW-t	MT20	3.0	5.0	1.50	1.50
D	TTW+p	MT20	3.0	5.0	2.00	Edge
E	TMWW-t	MT20	3.0	5.0	1.50	1.50
F	TMVW+p	MT20	4.0	6.0	2.00	2.00
H	BMV1+p	MT20	2.0	4.0		
I	BBWW-t	MT20	4.0	6.0	2.00	4.00
J	BBWWW-p	MT20	5.0	6.0	2.75	3.00
K	BBWW-t	MT20	4.0	6.0	2.00	4.00
L	BMV1+p	MT20	2.0	4.0		

Edge - INDICATES REFERENCE CORNER OF PLATE TOUCHES EDGE OF CHORD.

NOTE: Lateral brace(s) shown shall be 2x4 SPF #2

LICENSED PROFESSIONAL ENGINEER
11/11/2019
R. TURENNE
100157040
PROVINCE OF ONTARIO

DIMENSIONS, SUPPORTS AND LOADINGS SPECIFIED BY FABRICATOR TO BE VERIFIED BY BUILDING DESIGNER

BEARINGS

JT	FACTORED GROSS REACTION VERT	HORZ	MAXIMUM FACTORED GROSS REACTION DOWN	HORZ	UPLIFT	INPUT BRG IN-SX	REQRD BRG IN-SX
L	830	0	830	0	0	5-8	1-8
H	830	0	830	0	0	5-8	1-8

UNFACTORED REACTIONS

JT	1ST LCASE COMBINED	MAX./MIN. COMPONENT REACTIONS SNOW	LIVE	PERM.LIVE	WIND	DEAD	SOIL
L	587	386 / 0	0 / 0	0 / 0	0 / 0	201 / 0	0 / 0
H	587	386 / 0	0 / 0	0 / 0	0 / 0	201 / 0	0 / 0

BEARING MATERIAL TO BE SPF NO.2 OR BETTER AT JOINT(S) L, H

BRACING

TOP CHORD TO BE SHEATHED OR MAX. PURLIN SPACING = 6.25 FT.
MAX. UNBRACED BOTTOM CHORD LENGTH = 10.00 FT OR RIGID CEILING DIRECTLY APPLIED.

ALL PITCH BREAKS AND PERIMETER CORNER JOINTS MUST BE LATERALLY RESTRAINED.

LOADING

TOTAL LOAD CASES: (4)

CHORDS

MEMB. FR-TO	MAX. FACTORED FORCE (LBS)	FACTORED VERT. LOAD LC1 (PLF) FROM	TO	MAX CSI (LC)	MAX. UNBRAC LENGTH
A- B	0 / 48	-84.9	-84.9	0.12 (1)	10.00
B- C	-472 / 0	-84.9	-84.9	0.14 (1)	6.25
C- D	-507 / 0	-84.9	-84.9	0.17 (1)	6.25
D- E	-507 / 0	-84.9	-84.9	0.17 (1)	6.25
E- F	-472 / 0	-84.9	-84.9	0.14 (1)	6.25
F- G	0 / 48	-84.9	-84.9	0.12 (1)	10.00
L- B	-803 / 0	0.0	0.0	0.10 (1)	7.81
H- F	-803 / 0	0.0	0.0	0.10 (1)	7.81
L- K	0 / 0	-18.5	-18.5	0.05 (4)	10.00
K- J	0 / 360	-18.5	-18.5	0.12 (4)	10.00
J- I	0 / 360	-18.5	-18.5	0.12 (4)	10.00
I- H	0 / 0	-18.5	-18.5	0.05 (4)	10.00

WEBS

MEMB. FR-TO	MAX. FACTORED FORCE (LBS)	MAX CSI (LC)
J- D	0 / 490	0.11 (1)
I- E	-13 / 0	0.01 (1)
C- J	-341 / 0	0.19 (1)
K- C	-13 / 0	0.01 (1)
B- K	-341 / 0	0.19 (1)
I- F	0 / 367	0.08 (1)
	0 / 367	0.08 (1)

DESIGN CRITERIA

SPECIFIED LOADS:

TOP CH.	LL	=	23.3	PSF
	DL	=	6.0	PSF
BOT CH.	LL	=	0.0	PSF
	DL	=	7.4	PSF
TOTAL LOAD		=	36.7	PSF

SPACING = 24.0 IN. C/C

THIS TRUSS IS DESIGNED FOR RESIDENTIAL OR SMALL BUILDING REQUIREMENTS OF PART 9, NBCC 2010, NBCC 2015

THIS DESIGN COMPLIES WITH:
- PART 9 OF BCBC 2018 , OBC 2012 , ABC 2019
- CSA 086-09, CSA 086-14
- TPIC 2011, TPIC 2014

(55 % OF 27.2 P.S.F. G.S.L. PLUS 8.4 P.S.F. RAIN LOAD) EQUALS 23.3 P.S.F. SPECIFIED ROOF LIVE LOAD

ALLOWABLE DEFL.(LL)= L/360 (0.46")
CALCULATED VERT. DEFL.(LL) = L/ 999 (0.01")
ALLOWABLE DEFL.(TL)= L/360 (0.46")
CALCULATED VERT. DEFL.(TL) = L/ 999 (0.03")

CSI: TC=0.17/1.00 (D-E:1) , BC=0.12/1.00 (I-J:4) , WB=0.19/1.00 (E-I:1) , SSI=0.10/1.00 (D-E:1)

DOL LUMBER=1.00 NAIL=1.00 LS BEND=1.10 COMP=1.10 SHEAR=1.10 TENS= 1.10

COMPANION LIVE LOAD FACTOR = 1.00

TRUSS PLATE MANUFACTURER IS NOT RESPONSIBLE FOR QUALITY CONTROL IN THE TRUSS MANUFACTURING PLANT .

NAIL VALUES

PLATE	GRIP(DRY) (PSI) MAX	MIN	SHEAR (PLI) MAX	MIN	SECTION (PLI) MAX	MIN
MT20	618	354	1667	788	1987	1656

PLATE PLACEMENT TOL. = 0.250 inches

PLATE ROTATION TOL. = 5.0 Deg.

JSI GRIP= 0.75 (D) (INPUT = 0.90)
JSI METAL= 0.21 (F) (INPUT = 1.00)

JOB NAME	TRUSS NAME	QUANTITY	PLY	JOB DESC.	DRWG NO.
313999	H14TG		1	TRUSS DESC. JT-39002	E-19112597

Alpa Roof Truss, Maple

ID:MF8iiriaTok7DlbpT4B71Xys4PG-L4C1tpbCVJFY?FfLuW0UIgKjHr1YMtjWMB0QWhyKEKF

-1-3-8 0-0-10-8 2-11-0 4-10-8 6-10-8 8-10-8 10-10-0 12-10-8 13-9-0 15-0-8
1-3-8 10-8 2-0-8 1-11-8 2-0-0 2-0-0 1-11-8 2-0-8 10-8 1-3-8

Scale = 1:78.9

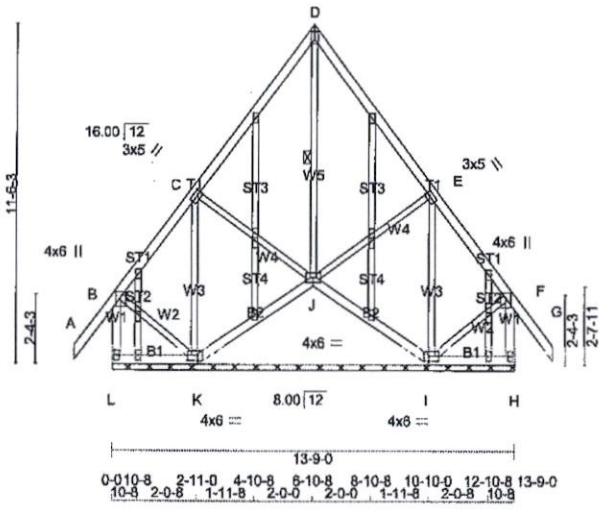

TOTAL WEIGHT = 98 lb [M]

LUMBER

N. L. G. A. RULES

CHORDS	SIZE		LUMBER	DESCR.
A - D	2x4	DRY	No.2	SPF
D - G	2x4	DRY	No.2	SPF
L - B	2x4	DRY	No.2	SPF
H - F	2x4	DRY	No.2	SPF
L - K	2x4	DRY	No.2	SPF
K - J	2x4	DRY	No.2	SPF
J - I	2x4	DRY	No.2	SPF
I - H	2x4	DRY	No.2	SPF
ALL WEBS EXCEPT	2x3	DRY	No.2	SPF
ALL GABLE WEBS	2x3	DRY	No.2	SPF

DRY: SEASONED LUMBER.

GABLE STUDS SPACED AT 2-0-0 OC.

PLATES (table is in inches)

JT	TYPE	PLATES	W	LEN	Y	X
B	TMVW+p	MT20	4.0	6.0	2.00	2.00
C	TMWW-t	MT20	3.0	5.0	1.50	1.50
D	TTW+p	MT20	3.0	5.0	2.00	Edge
E	TMWW-t	MT20	3.0	5.0	1.50	1.50
F	TMVW+p	MT20	4.0	6.0	2.00	2.00
H	BMV1+p	MT20	2.0	4.0		
I	BBWW1-I	MT20	4.0	6.0	2.00	4.00
J	BBWWW1-p	MT20	4.0	6.0		
K	BBWW1-I	MT20	4.0	6.0	2.00	4.00
L	BMV1+p	MT20	2.0	4.0		
M	NP+w	MT20	2.0	4.0	1.00	1.00
M, N, O, P, Q, R, S, T, U, V, W, X						
M	NP+w	MT20	2.0	4.0		
P	NP+w	MT20	2.0	4.0	1.25	1.00
U	NP+w	MT20	2.0	4.0	1.00	1.00
X	NP+w	MT20	2.0	4.0	1.25	1.00

Edge - INDICATES REFERENCE CORNER OF PLATE TOUCHES EDGE OF CHORD.

NOTE: Lateral brace(s) shown shall be 2x4 SPF #2

LICENSED PROFESSIONAL ENGINEER
11/11/2019
R. TURENNE
100157040
PROVINCE OF ONTARIO

DIMENSIONS, SUPPORTS AND LOADINGS SPECIFIED BY FABRICATOR TO BE VERIFIED BY BUILDING DESIGNER

BEARINGS

JT	FACTORED GROSS REACTION VERT	HORZ	MAXIMUM FACTORED GROSS REACTION DOWN	HORZ	UPLIFT	INPUT BRG IN-SX	REQRD BRG IN-SX
L	379	0	379	0	0	13-9-0 (6-10-8)	5-4
K	195	0	195	0	0	13-9-0 (6-10-8)	5-4
J	512	0	512	0	0	13-9-0 (6-10-8)	5-4
I	195	0	195	0	0	13-9-0 (6-10-8)	5-4
H	379	0	379	0	0	13-9-0 (6-10-8)	5-4

VALUE IN PARENTHESIS INDICATES EFFECTIVE BEARING LENGTH

BEVELED PLATE OR SHIM REQUIRED TO PROVIDE FULL BEARING SURFACE WITH TRUSS CHORD AT JT(S): J

UNFACTORED REACTIONS

JT	1ST LCASE COMBINED	MAX./MIN. COMPONENT REACTIONS SNOW	LIVE	PERM.LIVE	WIND	DEAD	SOIL
L	265	193 / 0	0 / 0	0 / 0	0 / 0	71 / 0	0 / 0
K	141	72 / 0	0 / 0	0 / 0	0 / 0	69 / 0	0 / 0
J	361	241 / 0	0 / 0	0 / 0	0 / 0	121 / 0	0 / 0
I	141	72 / 0	0 / 0	0 / 0	0 / 0	69 / 0	0 / 0
H	265	193 / 0	0 / 0	0 / 0	0 / 0	71 / 0	0 / 0

BEARING MATERIAL TO BE SPF NO.2 OR BETTER AT JOINT(S) L, K, J, I, H

BRACING

TOP CHORD TO BE SHEATHED OR MAX. PURLIN SPACING = 6.25 FT.
MAX. UNBRACED BOTTOM CHORD LENGTH = 10.00 FT OR RIGID CEILING DIRECTLY APPLIED.

ALL PITCH BREAKS AND PERIMETER CORNER JOINTS MUST BE LATERALLY RESTRAINED.

1 LATERAL BRACE(S) AT 1/ 2 LENGTH OF D-J.

END VERTICAL(S) MUST BE SHEATHED OR HAVE BRACES AS INDICATED IN THE MAX. UNBRACED LENGTH COLUMN OF THE TABLE BELOW

LOADING

TOTAL LOAD CASES: (4)

CHORDS

MEMB. FR-TO	MAX. FACTORED FORCE (LBS)	FACTORED VERT. LOAD LC1 (PLF) FROM	TO	MAX CSI (LC)	MAX. UNBRAC LENGTH
A- B	0 / 48	-84.9	-84.9	0.12 (1)	10.00
B- C	-96 / 0	-84.9	-84.9	0.19 (1)	6.25
C- D	-50 / 0	-84.9	-84.9	0.19 (1)	6.25
D- E	-50 / 0	-84.9	-84.9	0.19 (1)	6.25
E- F	-96 / 0	-84.9	-84.9	0.19 (1)	6.25
F- G	0 / 48	-84.9	-84.9	0.12 (1)	10.00
L- B	-352 / 0	0.0	0.0	0.04 (1)	7.81
H- F	-352 / 0	0.0	0.0	0.04 (1)	7.81
L- K	0 / 0	-18.5	-18.5	0.05 (4)	10.00
K- J	0 / 93	-18.5	-18.5	0.09 (4)	10.00
J- I	0 / 93	-18.5	-18.5	0.09 (4)	10.00
I- H	0 / 0	-18.5	-18.5	0.05 (4)	10.00

WEBS

MEMB. FR-TO	MAX. FACTORED FORCE (LBS)	MAX CSI (LC)
J- D	-241 / 0	0.12 (1)
J- E	-79 / 0	0.03 (1)
I- E	-237 / 0	0.14 (1)
C- J	-79 / 0	0.03 (1)
K- C	-237 / 0	0.14 (1)
B- K	0 / 98	0.02 (1)
I- F	0 / 98	0.02 (1)

DESIGN CRITERIA

SPECIFIED LOADS:

TOP CH.	LL	=	23.3	PSF
	DL	=	6.0	PSF
BOT CH.	LL	=	0.0	PSF
	DL	=	7.4	PSF
TOTAL LOAD		=	36.7	PSF

SPACING = 24.0 IN. C/C

THIS TRUSS IS DESIGNED FOR RESIDENTIAL OR SMALL BUILDING REQUIREMENTS OF PART 9, NBCC 2010, NBCC 2015

THIS DESIGN COMPLIES WITH:
- PART 9 OF BCBC 2018 , OBC 2012 , ABC 2019
- CSA 086-09, CSA 086-14
- TPIC 2011, TPIC 2014

(55 % OF 27.2 P.S.F. G.S.L. PLUS 8.4 P.S.F. RAIN LOAD) EQUALS 23.3 P.S.F. SPECIFIED ROOF LIVE LOAD

CSI: TC=0.19/1.00 (B-C:1) , BC=0.09/1.00 (I-J:4) , WB=0.14/1.00 (E-I:1) , SSI=0.10/1.00 (D-E:1)

DOL LUMBER=1.00 NAIL=1.00 LS BEND=1.10 COMP=1.10 SHEAR=1.10 TENS= 1.10

COMPANION LIVE LOAD FACTOR = 1.00

TRUSS PLATE MANUFACTURER IS NOT RESPONSIBLE FOR QUALITY CONTROL IN THE TRUSS MANUFACTURING PLANT .

NAIL VALUES

PLATE	GRIP(DRY) (PSI) MAX	MIN	SHEAR (PLI) MAX	MIN	SECTION (PLI) MAX	MIN
MT20	618	354	1667	788	1987	1656

PLATE PLACEMENT TOL. = 0.250 inches

PLATE ROTATION TOL. = 5.0 Deg.

JSI GRIP= 0.37 (J) (INPUT = 0.90)
JSI METAL= 0.17 (J) (INPUT = 1.00)

JOB NAME	TRUSS NAME	QUANTITY	PLY	JOB DESC.	DRWG NO.
313999	H15G		1	TRUSS DESC. JT-39002	E-19112598

Alpa Roof Truss, Maple

Version 8.300 S Aug 9 2019 MiTek Industries, Inc. Mon Nov 11 15:05:05 2019 Page 1
ID:MF8iiriaTok7DlbpT4B71Xys4PG-IfuAVrd4oEd7siNwafaBwIyFg339ZD9y29F47?yKEKC

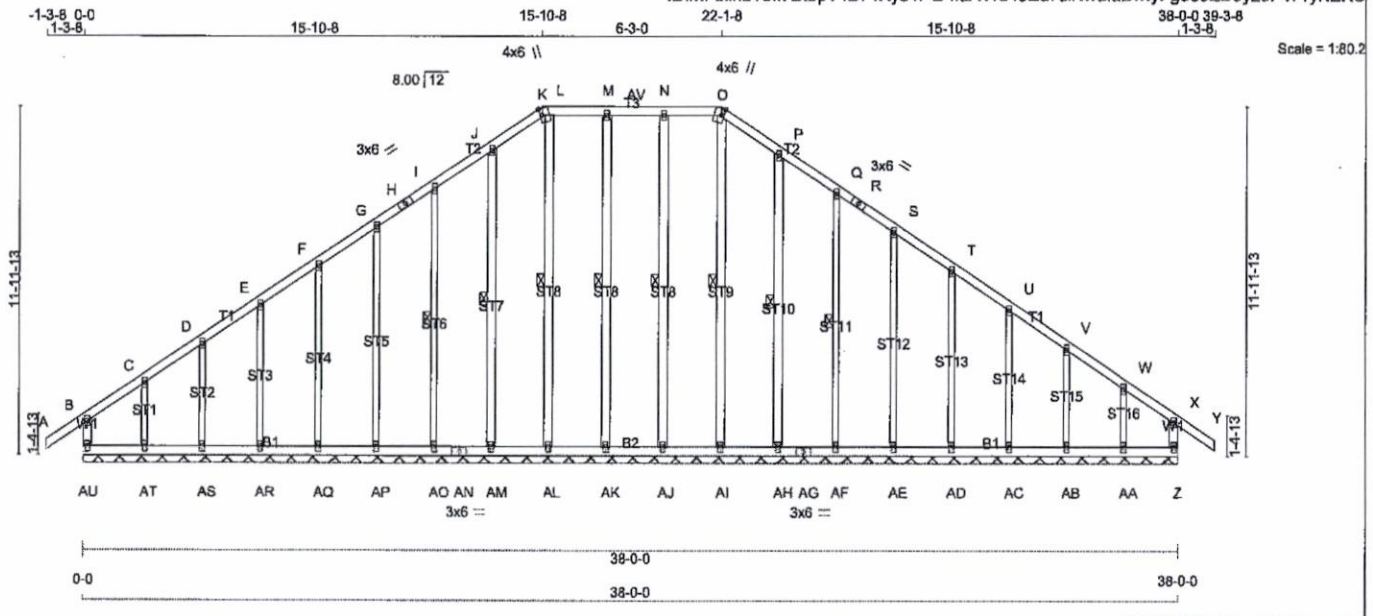

TOTAL WEIGHT = 2 X 229 = 458 lb

[M]

LUMBER

N. L. G. A. RULES

CHORDS	SIZE		LUMBER	DESCR.
AU- B	2x4	DRY	No.2	SPF
A - H	2x4	DRY	No.2	SPF
H - K	2x4	DRY	No.2	SPF
K - O	2x4	DRY	No.2	SPF
O - R	2x4	DRY	No.2	SPF
R - Y	2x4	DRY	No.2	SPF
Z - X	2x4	DRY	No.2	SPF
AU- AN	2x4	DRY	No.2	SPF
AN- AG	2x4	DRY	No.2	SPF
AG- Z	2x4	DRY	No.2	SPF
ALL WEBS	2x3	DRY	No.2	SPF
EXCEPT				
AI - O	2x4	DRY	No.2	SPF
AJ - N	2x4	DRY	No.2	SPF
AK- M	2x4	DRY	No.2	SPF
AL- L	2x4	DRY	No.2	SPF
AM- J	2x4	DRY	No.2	SPF
AH- P	2x4	DRY	No.2	SPF
ALL GABLE WEBS	2x3	DRY	No.2	SPF
EXCEPT				
ST1	2x4	DRY	No.2	SPF
ST2	2x4	DRY	No.2	SPF
ST3	2x4	DRY	No.2	SPF
ST4	2x4	DRY	No.2	SPF
ST5	2x4	DRY	No.2	SPF
ST12	2x4	DRY	No.2	SPF

DRY: SEASONED LUMBER.

GABLE STUDS SPACED AT 2-0-0 OC.

PLATES (table is in inches)

JT	TYPE	PLATES	W	LEN	Y	X
B	TMV+p	MT20	2.0	4.0		
C, D, E, F, G, I, J, M, N, P, Q, S, T, U, V, W						
C	TMW+w	MT20	2.0	4.0		
H	TS-t	MT20	3.0	6.0		
K						
K	TTW+m	MT20	4.0	6.0	Edge 1.00	

NOTE: Lateral brace(s) shown shall be 2x4 SPF #2

LICENSED PROFESSIONAL ENGINEER
11/11/2019
R. TURENNE
100157040
PROVINCE OF ONTARIO

DIMENSIONS, SUPPORTS AND LOADINGS SPECIFIED BY FABRICATOR TO BE VERIFIED BY BUILDING DESIGNER

BEARINGS

THIS TRUSS DESIGNED FOR CONTINUOUS BEARINGS.

THIS TRUSS REQUIRES RIGID SHEATHING ON EXPOSED FACE.

BEARING MATERIAL TO BE SPF NO.2 OR BETTER AT JOINT(S)

BRACING

FOR SECTION K-O, MAX. PURLIN SPACING = 2.00 FT.
FOR OTHER SECTIONS, TOP CHORD TO BE SHEATHED OR MAX. PURLIN SPACING = 6.25 FT.
MAX. UNBRACED BOTTOM CHORD LENGTH = 10.00 FT OR RIGID CEILING DIRECTLY APPLIED.

ALL PITCH BREAKS AND PERIMETER CORNER JOINTS MUST BE LATERALLY RESTRAINED.

1 LATERAL BRACE(S) AT 1/ 2 LENGTH OF O-AI, N-AJ, M-AK, L-AL, J-AM, I-AO, P-AH, Q-AF.

END VERTICAL(S) MUST BE SHEATHED OR HAVE BRACES AS INDICATED IN THE MAX. UNBRACED LENGTH COLUMN OF THE TABLE BELOW

LOADING

TOTAL LOAD CASES: (4)

CHORDS

MEMB. FR-TO	MAX. FACTORED FORCE (LBS)	FACTORED VERT. LOAD LC1 (PLF) FROM	TO	MAX CSI (LC)	MAX. UNBRAC LENGTH
AU- B	-210 / 0	0.0	0.0	0.01 (4)	7.81
A- B	0 / 32	-84.9	-84.9	0.11 (1)	10.00
B- C	-11 / 0	-84.9	-84.9	0.04 (1)	6.25
C- D	-4 / 0	-84.9	-84.9	0.04 (1)	10.00
D- E	-3 / 0	-84.9	-84.9	0.04 (1)	10.00
E- F	-2 / 4	-84.9	-84.9	0.04 (1)	10.00
F- G	-2 / 6	-84.9	-84.9	0.04 (1)	10.00
G- H	-1 / 8	-84.9	-84.9	0.04 (1)	10.00
H- I	-1 / 8	-84.9	-84.9	0.04 (1)	10.00
I- J	0 / 12	-84.9	-84.9	0.05 (1)	10.00
J- K	-2 / 5	-84.9	-84.9	0.04 (1)	10.00
K- L	0 / 15	-92.4	-92.4	0.04 (1)	2.00
L- M	0 / 10	-92.4	-92.4	0.04 (1)	2.00
M-AV	0 / 10	-92.4	-92.4	0.04 (1)	2.00
AV- N	0 / 10	-92.4	-92.4	0.04 (1)	2.00
N- O	0 / 10	-92.4	-92.4	0.04 (1)	2.00
O- P	0 / 11	-84.9	-84.9	0.04 (1)	10.00
P- Q	0 / 12	-84.9	-84.9	0.04 (1)	10.00
Q- R	-1 / 8	-84.9	-84.9	0.04 (1)	10.00
R- S	-1 / 8	-84.9	-84.9	0.04 (1)	10.00
S- T	-2 / 6	-84.9	-84.9	0.04 (1)	10.00
T- U	-2 / 4	-84.9	-84.9	0.04 (1)	10.00
U- V	-3 / 0	-84.9	-84.9	0.04 (1)	10.00
V- W	-3 / 0	-84.9	-84.9	0.04 (1)	10.00
W- X	-26 / 0	-84.9	-84.9	0.09 (1)	6.25
X- Y	0 / 32	-84.9	-84.9	0.11 (1)	10.00
Z- X	-227 / 0	0.0	0.0	0.03 (1)	7.81
AU-AT	0 / 9	-18.5	-18.5	0.02 (4)	10.00
AT-AS	0 / 3	-18.5	-18.5	0.02 (4)	10.00
AS-AR	0 / 2	-18.5	-18.5	0.02 (4)	10.00
AR-AQ	-3 / 2	-18.5	-18.5	0.02 (4)	10.00
AQ-AP	-5 / 1	-18.5	-18.5	0.01 (4)	10.00
AP-AO	-7 / 1	-18.5	-18.5	0.01 (4)	10.00
AO-AN	-8 / 0	-18.5	-18.5	0.01 (4)	10.00
AN-AM	-8 / 0	-18.5	-18.5	0.01 (4)	10.00
AM-AL	-10 / 0	-18.5	-18.5	0.01 (4)	10.00
AL-AK	-10 / 0	-18.5	-18.5	0.01 (4)	10.00
AK-AJ	-10 / 0	-18.5	-18.5	0.01 (4)	10.00
AJ-AI	-10 / 0	-18.5	-18.5	0.01 (4)	10.00
AI-AH	-10 / 0	-18.5	-18.5	0.01 (4)	10.00

WEBS

MEMB. FR-TO	MAX. FACTORED FORCE (LBS)	MAX CSI (LC)
AI- O	-186 / 0	0.15 (1)
AJ- N	-186 / 0	0.15 (1)
AK- M	-186 / 0	0.14 (1)
AL- L	-188 / 0	0.15 (1)
AM- J	-176 / 0	0.11 (1)
AO- I	-165 / 0	0.10 (1)
AP- G	-170 / 0	0.22 (1)
AQ- F	-168 / 0	0.13 (1)
AR- E	-168 / 0	0.08 (1)
AS- D	-167 / 0	0.04 (1)
AT- C	-167 / 0	0.03 (1)
AH- P	-176 / 0	0.10 (1)
AF- Q	-165 / 0	0.09 (1)
AE- S	-170 / 0	0.21 (1)
AD- T	-168 / 0	0.12 (1)
AC- U	-166 / 0	0.07 (1)
AB- V	-177 / 0	0.04 (1)
AA- W	-121 / 0	0.02 (1)

DESIGN CRITERIA

SPECIFIED LOADS:

TOP CH.	LL	=	23.3	PSF
	DL	=	6.0	PSF
BOT CH.	LL	=	0.0	PSF
	DL	=	7.4	PSF
TOTAL LOAD		=	36.7	PSF

SPACING = 24.0 IN. C/C

LOADING IN FLAT SECTION BASED ON PIGGYBACK TRUSS WITH SLOPES OF 6.00/12 AND -6.00/12 AND RESPECTIVE WALL HEIGHTS OF 0-0 AND 0-0 AND AN ADDITIONAL DEAD LOAD OF 3.0 P.S.F.

THIS TRUSS IS DESIGNED FOR RESIDENTIAL OR SMALL BUILDING REQUIREMENTS OF PART 9, NBCC 2010, NBCC 2015

THIS DESIGN COMPLIES WITH:
- PART 9 OF BCBC 2018 , OBC 2012 , ABC 2019
- CSA 086-09, CSA 086-14
- TPIC 2011, TPIC 2014

DESIGN ASSUMPTIONS
-OVERHANG NOT TO BE ALTERED OR CUT OFF.

(55 % OF 27.2 P.S.F. G.S.L. PLUS 8.4 P.S.F. RAIN LOAD) EQUALS 23.3 P.S.F. SPECIFIED ROOF LIVE LOAD

CSI: TC=0.11/1.00 (A-B:1) , BC=0.03/1.00 (Z-AA:1) , WB=0.22/1.00 (G-AP:1) , SSI=0.08/1.00 (A-B:1)

DOL LUMBER=1.00 NAIL=1.00 LS BEND=1.10 COMP=1.10 SHEAR=1.10 TENS= 1.10

COMPANION LIVE LOAD FACTOR = 1.00

TRUSS PLATE MANUFACTURER IS NOT RESPONSIBLE FOR QUALITY CONTROL IN THE TRUSS MANUFACTURING PLANT .

NAIL VALUES

PLATE	GRIP(DRY) (PSI) MAX	MIN	SHEAR (PLI) MAX	MIN	SECTION (PLI) MAX	MIN
MT20	618	354	1667	788	1987	1656

PLATE PLACEMENT TOL. = 0.250 inches

PLATE ROTATION TOL. = 5.0 Deg.

JSI GRIP= 0.56 (K) (INPUT = 0.90)
JSI METAL= 0.12 (X) (INPUT = 1.00)

CONTINUED ON PAGE 2

JOB NAME	TRUSS NAME	QUANTITY	PLY	JOB DESC.	DRWG NO.
313999	H16P		1	TRUSS DESC. JT-39002	E-19112599

Alpa Roof Truss, Maple

Version 8.300 S Aug 9 2019 MiTek Industries, Inc. Mon Nov 11 15:05:06 2019 Page 1
ID:MF8iiriaTok7DlbpT4B71Xys4PG-DrSYlAeiZYlzUsy67M5QTWUROSPJljb6Gp_efSyKEKB

Scale = 1:16.5

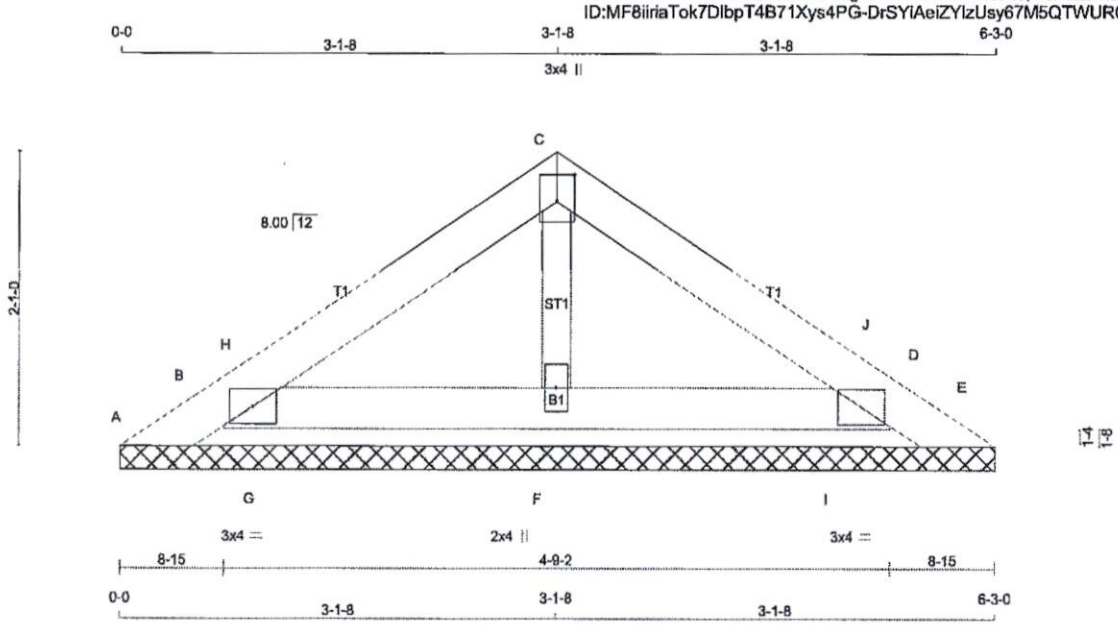

TOTAL WEIGHT = 2 X 15 = 30 lb [M]

LUMBER
N. L. G. A. RULES

CHORDS	SIZE		LUMBER	DESCR.
A - C	2x4	DRY	No.2	SPF
C - E	2x4	DRY	No.2	SPF
B - D	2x4	DRY	No.2	SPF
ALL WEBS	2x3	DRY	No.2	SPF
ALL GABLE WEBS	2x3	DRY	No.2	SPF

DRY: SEASONED LUMBER.

GABLE STUDS SPACED AT 2-0-0 OC.

PLATES (table is in inches)

JT	TYPE	PLATES	W	LEN	Y	X
B	TMB1-I	MT20	3.0	4.0		
C	TTW+p	MT20	3.0	4.0	2.25	1.50
D	TMB1-I	MT20	3.0	4.0		
F	BMW1+w	MT20	2.0	4.0		

NOTE: Lateral brace(s) shown shall be 2x4 SPF #2

LICENSED PROFESSIONAL ENGINEER
11/11/2019
R. TURENNE
100157040
PROVINCE OF ONTARIO

DIMENSIONS, SUPPORTS AND LOADINGS SPECIFIED BY FABRICATOR TO BE VERIFIED BY BUILDING DESIGNER

BEARINGS

THIS TRUSS DESIGNED FOR CONTINUOUS BEARINGS.

THIS TRUSS REQUIRES RIGID SHEATHING ON EXPOSED FACE.

BEVELED PLATE OR SHIM REQUIRED TO PROVIDE FULL BEARING SURFACE WITH TRUSS CHORD AT JT(S): F

PROVIDE ANCHORAGE AT BEARING JOINT A FOR 150 LBS FACTORED UPLIFT
PROVIDE ANCHORAGE AT BEARING JOINT E FOR 150 LBS FACTORED UPLIFT
BEARING MATERIAL TO BE SPF NO.2 OR BETTER AT JOINT(S)

BRACING
TOP CHORD TO BE SHEATHED OR MAX. PURLIN SPACING = 6.25 FT.
MAX. UNBRACED BOTTOM CHORD LENGTH = 10.00 FT OR RIGID CEILING DIRECTLY APPLIED.

ALL PITCH BREAKS AND PERIMETER CORNER JOINTS MUST BE LATERALLY RESTRAINED.

LOADING
TOTAL LOAD CASES: (4)

CHORDS

MEMB. FR-TO	MAX. FORCE (LBS)	FACTORED VERT. LOAD LC1 (PLF) FROM	TO	MAX CSI (LC)	MAX. UNBRAC LENGTH
A- B	0 / 27	-103.4	-103.4	0.05 (1)	10.00
B- H	-71 / 0	-84.9	-84.9	0.05 (1)	6.25
H- C	-48 / 0	-84.9	-84.9	0.05 (1)	6.25
C- J	-48 / 0	-84.9	-84.9	0.05 (1)	6.25
J- D	-71 / 0	-84.9	-84.9	0.05 (1)	6.25
D- E	0 / 27	-103.4	-103.4	0.05 (1)	10.00
B- G	0 / 35	-18.5	-18.5	0.03 (1)	10.00
G- F	0 / 35	-18.5	-18.5	0.04 (1)	10.00
F- I	0 / 35	-18.5	-18.5	0.04 (1)	10.00
I- D	0 / 35	-18.5	-18.5	0.03 (1)	10.00

WEBS

MEMB. FR-TO	MAX. FORCE (LBS)	MAX CSI (LC)
F- C	-108 / 0	0.02 (1)
G- H	-66 / 10	0.00 (1)
I- J	-66 / 10	0.00 (1)

DESIGN CRITERIA

SPECIFIED LOADS:

TOP CH.	LL =	23.3	PSF
	DL =	6.0	PSF
BOT CH.	LL =	0.0	PSF
	DL =	7.4	PSF
TOTAL LOAD	=	36.7	PSF

SPACING = 24.0 IN. C/C

THIS TRUSS IS DESIGNED FOR RESIDENTIAL OR SMALL BUILDING REQUIREMENTS OF PART 9, NBCC 2010, NBCC 2015

THIS DESIGN COMPLIES WITH:
- PART 9 OF BCBC 2018 , OBC 2012 , ABC 2019
- CSA 086-09, CSA 086-14
- TPIC 2011, TPIC 2014

(55 % OF 27.2 P.S.F. G.S.L. PLUS 8.4 P.S.F. RAIN LOAD) EQUALS 23.3 P.S.F. SPECIFIED ROOF LIVE LOAD

CSI: TC=0.05/1.00 (A-B:1) , BC=0.04/1.00 (F-I:1) , WB=0.02/1.00 (C-F:1) , SSI=0.06/1.00 (C-H:1)

DOL LUMBER=1.00 NAIL=1.00 LS BEND=1.10 COMP=1.10 SHEAR=1.10 TENS= 1.10

COMPANION LIVE LOAD FACTOR = 1.00

TRUSS PLATE MANUFACTURER IS NOT RESPONSIBLE FOR QUALITY CONTROL IN THE TRUSS MANUFACTURING PLANT .

NAIL VALUES

PLATE	GRIP(DRY) (PSI) MAX	MIN	SHEAR (PLI) MAX	MIN	SECTION (PLI) MAX	MIN
MT20	618	354	1667	788	1987	1656

PLATE PLACEMENT TOL. = 0.250 inches

PLATE ROTATION TOL. = 5.0 Deg.

JSI GRIP= 0.19 (D) (INPUT = 0.90)
JSI METAL= 0.04 (D) (INPUT = 1.00)

JOB NAME	TRUSS NAME	QUANTITY	PLY	JOB DESC.	DRWG NO.
314238	H1T		2	TRUSS DESC. JT-39002	E-19112600

Alpa Roof Truss, Maple

Version 8.300 S Aug 9 2019 MiTek Industries, Inc. Mon Nov 11 16:17:19 2019 Page 1

ID:MF8iiriaTok7DlbpT4B71Xys4PG-sRmc6n4e7sgAplitTsKXaFSn069D1E4ueR6QEoyKDGU

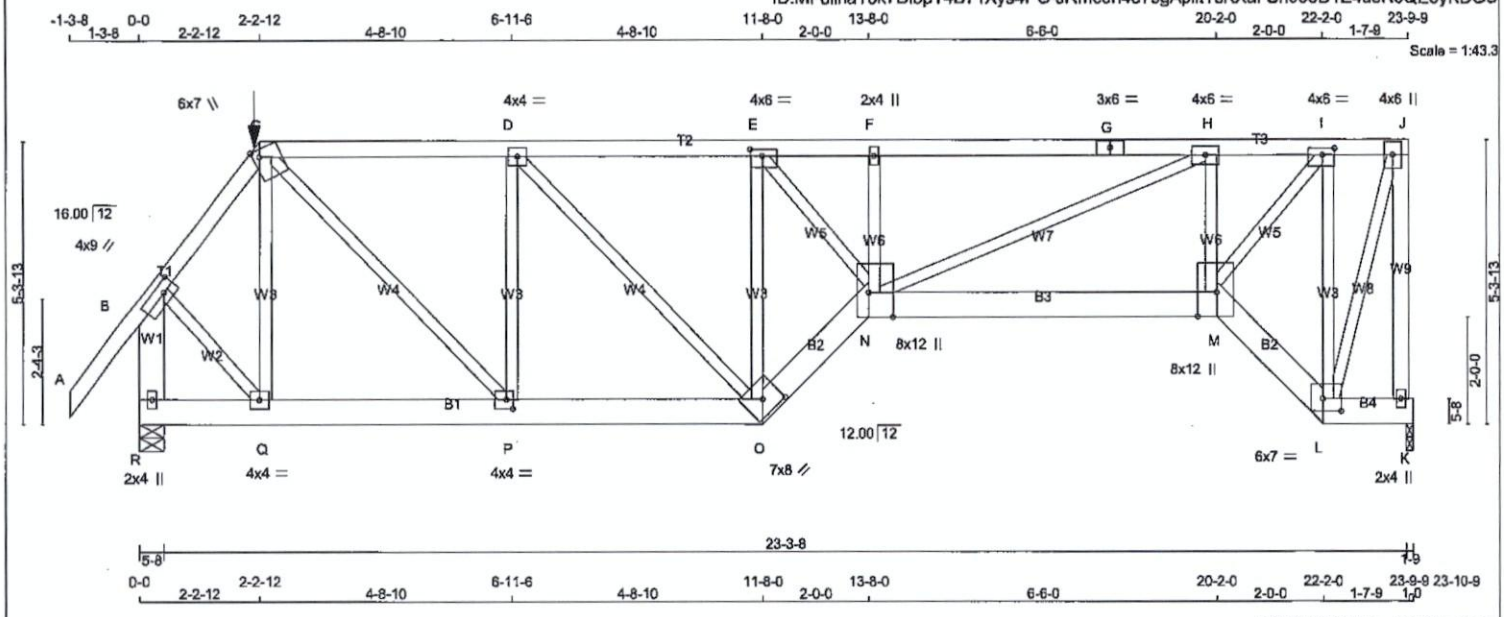

TOTAL WEIGHT = 4 X 134 = 535 lb

[M]

LUMBER

N. L. G. A. RULES

CHORDS	SIZE		LUMBER	DESCR.
A - C	2x4	DRY	No.2	SPF
C - G	2x4	DRY	No.2	SPF
G - J	2x4	DRY	No.2	SPF
K - J	2x4	DRY	No.2	SPF
R - B	2x6	DRY	No.2	SPF
R - O	2x6	DRY	No.2	SPF
O - N	2x6	DRY	No.2	SPF
N - M	2x6	DRY	No.2	SPF
M - L	2x6	DRY	No.2	SPF
L - K	2x6	DRY	No.2	SPF
ALL WEBS EXCEPT	2x3	DRY	No.2	SPF

DRY: SEASONED LUMBER.

DESIGN CONSISTS OF 2 TRUSSES BUILT SEPARATELY THEN FASTENED TOGETHER AS FOLLOWS:

CHORDS	#ROWS	SURFACE SPACING (IN)	LOAD(PLF)
TOP CHORDS : (0.122"X3") SPIRAL NAILS			
A- C	1	12	SIDE(61.0)
C- G	1	12	SIDE(41.1)
G- J	1	12	SIDE(41.1)
J- K	1	12	TOP
R- B	2	12	TOP
BOTTOM CHORDS : (0.122"X3") SPIRAL NAILS			
R- O	2	12	SIDE(10.0)
O- N	2	12	SIDE(7.1)
N- M	2	12	SIDE(50.1)
M- L	2	12	SIDE(7.1)
L- K	2	12	SIDE(10.0)
WEBS : (0.122"X3") SPIRAL NAILS			
2x3	1	6	

NAILS TO BE DRIVEN FROM ONE SIDE ONLY.

GIRDER NAILING ASSUMES NAILED HANGERS ARE FASTENED WITH MIN. 3-0 INCH NAILS.

TOP - COMPONENTS ARE LOADED FROM THE TOP AND MUST BE PLACED ON TOP EDGE OF ALL PLIES FOR THE LOAD TO BE TRANSFERRED TO EACH PLY.

NOTE: Lateral brace(s) shown shall be 2x4 SPF #2

LICENSED PROFESSIONAL ENGINEER
11/11/2019
R. TURENNE
100157040
PROVINCE OF ONTARIO

DIMENSIONS, SUPPORTS AND LOADINGS SPECIFIED BY FABRICATOR TO BE VERIFIED BY BUILDING DESIGNER

BEARINGS

JT	FACTORED GROSS REACTION VERT	HORZ	MAXIMUM FACTORED GROSS REACTION DOWN	HORZ	UPLIFT	INPUT BRG IN-SX	REQRD BRG IN-SX
K	2438	0	2438	0	0	1-9	1-8
R	2496	0	2496	0	0	5-8	1-8

UNFACTORED REACTIONS

JT	1ST LCASE COMBINED	MAX./MIN. COMPONENT REACTIONS SNOW	LIVE	PERM.LIVE	WIND	DEAD	SOIL
K	1730	1100 / 0	0 / 0	0 / 0	0 / 0	630 / 0	0 / 0
R	1771	1132 / 0	0 / 0	0 / 0	0 / 0	638 / 0	0 / 0

BEARING MATERIAL TO BE SPF NO.2 OR BETTER AT JOINT(S) K, R

BRACING

TOP CHORD TO BE SHEATHED OR MAX. PURLIN SPACING = 4.04 FT.
MAX. UNBRACED BOTTOM CHORD LENGTH = 10.00 FT OR RIGID CEILING DIRECTLY APPLIED.

ALL PITCH BREAKS AND PERIMETER CORNER JOINTS MUST BE LATERALLY RESTRAINED.

LOADING

TOTAL LOAD CASES: (4)

CHORDS

MEMB. FR-TO	MAX. FACTORED FORCE (LBS)	FACTORED VERT. LOAD (PLF) FROM	TO	LC1 MAX CSI (LC)	MAX. UNBRAC LENGTH
A- B	0 / 48	-84.9	-84.9	0.07 (1)	10.00
B- C	-1780 / 0	-84.9	-84.9	0.05 (1)	6.25
C- D	-2516 / 0	-167.1	-167.1	0.35 (1)	5.27
D- E	-3000 / 0	-167.1	-167.1	0.36 (1)	4.90
E- F	-4942 / 0	-167.1	-167.1	0.19 (1)	4.19
F- G	-4957 / 0	-84.9	-84.9	0.40 (1)	4.04
G- H	-4957 / 0	-84.9	-84.9	0.40 (1)	4.04
H- I	-2679 / 0	-167.1	-167.1	0.24 (1)	5.29
I- J	-733 / 0	-167.1	-167.1	0.10 (1)	6.25
K- J	-2408 / 0	0.0	0.0	0.56 (1)	7.26
R- B	-2497 / 0	0.0	0.0	0.11 (1)	7.81
R- Q	0 / 0	-36.4	-36.4	0.04 (1)	10.00
Q- P	0 / 1043	-36.4	-36.4	0.10 (1)	10.00
P- O	0 / 2517	-36.4	-36.4	0.20 (1)	10.00
O- N	0 / 4144	-36.4	-36.4	0.28 (1)	10.00
N- M	0 / 2738	-118.6	-118.6	0.41 (1)	10.00
M- L	0 / 952	-36.4	-36.4	0.07 (1)	10.00
L- K	0 / 0	-36.4	-36.4	0.01 (4)	10.00

WEBS

MEMB. FR-TO	MAX. FACTORED FORCE (LBS)	MAX CSI (LC)
Q- C	-663 / 0	0.13 (1)
C- P	0 / 2123	0.26 (1)
P- D	-1400 / 0	0.28 (1)
D- O	0 / 697	0.09 (1)
O- E	-3288 / 0	0.67 (1)
E- N	0 / 3422	0.42 (1)
N- F	-420 / 0	0.04 (1)
N- H	0 / 2435	0.30 (1)
M- H	-1665 / 0	0.17 (1)
M- I	0 / 3411	0.42 (1)
L- I	-2810 / 0	0.57 (1)
L- J	0 / 2321	0.29 (1)
B- Q	0 / 1357	0.17 (1)

FACTORED CONCENTRATED LOADS (LBS)

JT	LOC.	LC1	MAX-	MAX+	FACE	DIR.	TYPE	HEEL	CONN.
C	2-2-12	-138	-138	—	FRONT	VERT	TOTAL	—	C1

CONNECTION REQUIREMENTS

1) **C1:** A SUITABLE HANGER/MECHANICAL CONNECTION IS REQUIRED.

DESIGN CRITERIA

SPECIFIED LOADS:

TOP CH.	LL =	23.3	PSF
	DL =	6.0	PSF
BOT CH.	LL =	0.0	PSF
	DL =	7.4	PSF
TOTAL LOAD	=	36.7	PSF

SPACING = 24.0 IN. C/C

LOADING IN FLAT SECTION BASED ON A SLOPE OF 2.00/12 MINIMUM

GIRDER TYPE: CPrimeHip
LEFT SETBACK = 2-2-12
RIGHT SETBACK = 0-0
END SETBACK = 5-10-8
END WALL WIDTH = 0-0
CORNER FRAMING TYPE: CONVENTIONAL
END JACK TYPE: CONVENTIONAL
APPLIED TO FRONT SIDE
- ADDT'L LOADS BASED ON 55 % OF GSL.
LOADS APPLIED TO FIRST 13-8-0 OF SPAN MEASURED FROM THE LEFT.

GIRDER TYPE: CStdGirder
START DISTANCE = 13-8-0
START SPAN CARRIED = 5-10-8
END DISTANCE = 20-2-0
END SPAN CARRIED = 5-10-8
END WALL WIDTH = 0-0
APPLIED TO FRONT SIDE OF BOTTOM CHORD.
- ADDT'L LOADS BASED ON 55 % OF GSL.

GIRDER TYPE: CPrimeHip
LEFT SETBACK = 2-2-12
RIGHT SETBACK = 0-0
END SETBACK = 5-10-8
END WALL WIDTH = 0-0
CORNER FRAMING TYPE: CONVENTIONAL
END JACK TYPE: CONVENTIONAL
APPLIED TO FRONT SIDE
- ADDT'L LOADS BASED ON 55 % OF GSL.
LOADS APPLIED TO FIRST 3-8-9 OF SPAN MEASURED FROM THE RIGHT.

THIS TRUSS IS DESIGNED FOR RESIDENTIAL OR SMALL BUILDING REQUIREMENTS OF PART 9, NBCC 2010, NBCC 2015

THIS DESIGN COMPLIES WITH:
- PART 9 OF BCBC 2018 , OBC 2012 , ABC 2019
- CSA 086-09, CSA 086-14
- TPIC 2011, TPIC 2014

(55 % OF 27.2 P.S.F. G.S.L. PLUS 8.4 P.S.F. RAIN LOAD) EQUALS 23.3 P.S.F. SPECIFIED ROOF LIVE LOAD

ALLOWABLE DEFL.(LL)= L/360 (0.79")
CALCULATED VERT. DEFL.(LL) = L/ 999 (0.12")
ALLOWABLE DEFL.(TL)= L/360 (0.79")
CALCULATED VERT. DEFL.(TL) = L/ 999 (0.24")

CSI: TC=0.56/1.00 (J-K:1) , BC=0.41/1.00 (M-N:1) , WB=0.67/1.00 (E-O:1) , SSI=0.21/1.00 (C-D:1)

CONTINUED ON PAGE 2

PLATES (table is in inches)

JT	TYPE	PLATES	W	LEN	Y	X
B	TMVW-t	MT20	4.0	9.0	2.00	3.00
C	TTWW+m	MT20	6.0	7.0	Edge	1.50
D	TMWW-t	MT20	4.0	4.0		
E	TMWW-t	MT20	4.0	6.0	1.50	2.75
F	TMW+w	MT20	2.0	4.0		
G	TS-t	MT20	3.0	6.0		
H	TMWW-t	MT20	4.0	6.0		
I	TMWW-t	MT20	4.0	6.0	1.50	2.75
J	TMVW+p	MT20	4.0	6.0		
K	BMV1+p	MT20	2.0	4.0		
L	BBWW-l	MT20	6.0	7.0	2.75	4.25
M	BBWW+p	MT20	8.0	12.0	Edge	4.25
N	BBWWW+p	MT20	8.0	12.0	Edge	5.50
O	BBWW-h	MT20	7.0	8.0	3.25	4.00
P	BMWW-t	MT20	4.0	4.0	2.00	1.50
Q	BMWW-t	MT20	4.0	4.0		
R	BMV1+p	MT20	2.0	4.0		

Edge - INDICATES REFERENCE CORNER OF PLATE TOUCHES EDGE OF CHORD.

NOTE: Lateral brace(s) shown shall be 2x4 SPF #2

LICENSED PROFESSIONAL ENGINEER
11/11/2019
R. TURENNE
100157940
PROVINCE OF ONTARIO

DOL LUMBER=1.00 NAIL=1.00 LS BEND=1.00
COMP=1.00 SHEAR=1.00 TENS= 1.00

COMPANION LIVE LOAD FACTOR = 1.00

AUTOSOLVE RIGHT HEEL ONLY

TRUSS PLATE MANUFACTURER IS NOT RESPONSIBLE FOR QUALITY CONTROL IN THE TRUSS MANUFACTURING PLANT.

NAIL VALUES

PLATE	GRIP(DRY) (PSI)		SHEAR (PLI)		SECTION (PLI)	
	MAX	MIN	MAX	MIN	MAX	MIN
MT20	618	354	1667	788	1987	1656

PLATE PLACEMENT TOL. = 0.250 inches

PLATE ROTATION TOL. = 5.0 Deg.

JSI GRIP= 0.90 (I) (INPUT = 0.90)
JSI METAL= 0.36 (L) (INPUT = 1.00)

JOB NAME	TRUSS NAME	QUANTITY	PLY	JOB DESC.	DRWG NO.
314238	H2T		1	TRUSS DESC. JT-39002	E-19112601

Alpa Roof Truss, Maple

Version 8.300 S Aug 9 2019 MiTek Industries, Inc. Mon Nov 11 16:18:33 2019 Page 1
ID:MF8iiriaTok7DlbpT4B71Xys4PG-hhEae4_3ib_gh7M5oPftasWN1yReNevnfy1KrWyKDFK

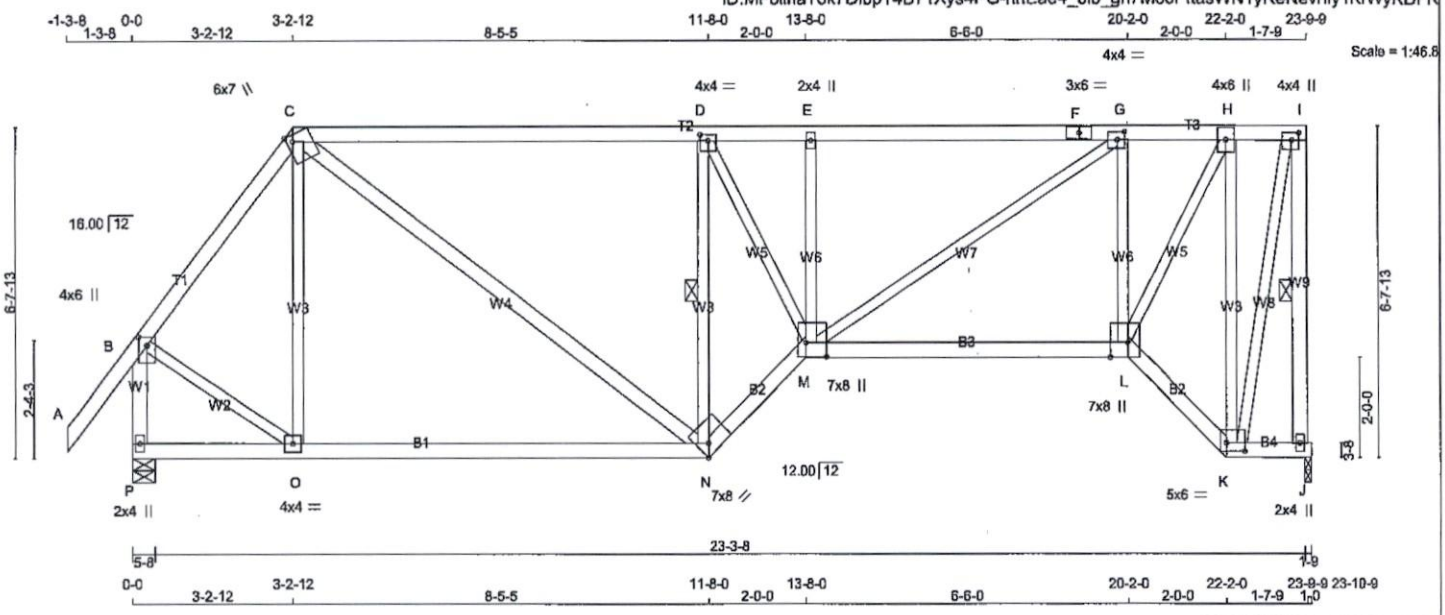

TOTAL WEIGHT = 2 X 125 = 251 lb

[M]

LUMBER

N. L. G. A. RULES

CHORDS	SIZE		LUMBER	DESCR.
A - C	2x4	DRY	No.2	SPF
C - F	2x4	DRY	1650F 1.5E	SPF
F - I	2x4	DRY	1650F 1.5E	SPF
J - I	2x4	DRY	No.2	SPF
P - B	2x4	DRY	No.2	SPF
P - N	2x4	DRY	No.2	SPF
N - M	2x4	DRY	No.2	SPF
M - L	2x4	DRY	No.2	SPF
L - K	2x4	DRY	No.2	SPF
K - J	2x4	DRY	No.2	SPF
ALL WEBS EXCEPT	2x3	DRY	No.2	SPF
C - N	2x4	DRY	No.2	SPF

DRY: SEASONED LUMBER.

PLATES (table is in inches)

JT	TYPE	PLATES	W	LEN	Y	X
B	TMVW+p	MT20	4.0	6.0	2.00	2.00
C	TTWW+m	MT20	6.0	7.0	Edge	1.50
D	TMWW-t	MT20	4.0	4.0	1.50	2.00
E	TMW+w	MT20	2.0	4.0		
F	TS-t	MT20	3.0	6.0		
G	TMWW-t	MT20	4.0	4.0	2.00	1.75
H	TMWW+t	MT20	4.0	6.0		
I	TMVW+p	MT20	4.0	4.0	1.75	1.75
J	BMV1+p	MT20	2.0	4.0		
K	BBWW-t	MT20	5.0	6.0	2.00	4.50
L	BBWW+p	MT20	7.0	8.0	Edge	4.25
M	BBWWW+p	MT20	7.0	8.0	3.25	5.00
N	BBWW-h	MT20	7.0	8.0	Edge	2.50
O	BMWW-t	MT20	4.0	4.0		
P	BMV1+p	MT20	2.0	4.0		

Edge - INDICATES REFERENCE CORNER OF PLATE TOUCHES EDGE OF CHORD.

NOTE: Lateral brace(s) shown shall be 2x4 SPF #2

LICENSED PROFESSIONAL ENGINEER
11/11/2019
R. TURENNE
100157040
PROVINCE OF ONTARIO

DIMENSIONS, SUPPORTS AND LOADINGS SPECIFIED BY FABRICATOR TO BE VERIFIED BY BUILDING DESIGNER

BEARINGS

JT	FACTORED GROSS REACTION VERT	HORZ	MAXIMUM FACTORED GROSS REACTION DOWN	HORZ	UPLIFT	INPUT BRG IN-SX	REQRD BRG IN-SX
J	1230	0	1230	0	0	1-9	1-8
P	1349	0	1349	0	0	5-8	2-0

UNFACTORED REACTIONS

JT	1ST LCASE COMBINED	MAX./MIN. COMPONENT REACTIONS SNOW	LIVE	PERM.LIVE	WIND	DEAD	SOIL
J	873	554 / 0	0 / 0	0 / 0	0 / 0	319 / 0	0 / 0
P	956	620 / 0	0 / 0	0 / 0	0 / 0	336 / 0	0 / 0

BEARING MATERIAL TO BE SPF NO.2 OR BETTER AT JOINT(S) J, P

BRACING

TOP CHORD TO BE SHEATHED OR MAX. PURLIN SPACING = 4.53 FT.
MAX. UNBRACED BOTTOM CHORD LENGTH = 10.00 FT OR RIGID CEILING DIRECTLY APPLIED.

ALL PITCH BREAKS AND PERIMETER CORNER JOINTS MUST BE LATERALLY RESTRAINED.

1 LATERAL BRACE(S) AT 1/ 2 LENGTH OF I-J, D-N.

END VERTICAL(S) MUST BE SHEATHED OR HAVE BRACES AS INDICATED IN THE MAX. UNBRACED LENGTH COLUMN OF THE TABLE BELOW

LOADING

TOTAL LOAD CASES: (4)

CHORDS

MEMB. FR-TO	MAX. FACTORED FORCE (LBS)	FACTORED VERT. LOAD LC1 (PLF) FROM	TO	MAX CSI (LC)	MAX. UNBRAC LENGTH
A- B	0 / 48	-84.9	-84.9	0.12 (1)	10.00
B- C	-952 / 0	-84.9	-84.9	0.17 (1)	6.16
C- D	-1252 / 0	-84.9	-84.9	0.77 (1)	5.11
D- E	-1684 / 0	-84.9	-84.9	0.67 (1)	4.53
E- F	-1687 / 0	-84.9	-84.9	0.37 (1)	5.27
F- G	-1687 / 0	-84.9	-84.9	0.37 (1)	5.27
G- H	-931 / 0	-84.9	-84.9	0.32 (1)	6.25
H- I	-279 / 0	-84.9	-84.9	0.12 (1)	6.25
J- I	-1215 / 0	0.0	0.0	0.25 (1)	5.81
P- B	-1355 / 0	0.0	0.0	0.17 (1)	6.97
P- O	0 / 0	-18.5	-18.5	0.28 (4)	10.00
O- N	0 / 564	-18.5	-18.5	0.34 (4)	10.00
N- M	0 / 1732	-18.5	-18.5	0.29 (1)	10.00
M- L	0 / 956	-18.5	-18.5	0.31 (4)	10.00
L- K	0 / 364	-18.5	-18.5	0.07 (1)	10.00
K- J	0 / 0	-18.5	-18.5	0.01 (4)	10.00

WEBS

MEMB. FR-TO	MAX. FACTORED FORCE (LBS)	MAX CSI (LC)
D- C	-177 / 48	0.13 (1)
C- N	0 / 858	0.14 (1)
N- D	-1654 / 0	0.47 (1)
D- M	0 / 1050	0.24 (1)
M- E	-135 / 0	0.04 (1)
M- G	0 / 883	0.20 (1)
L- G	-1050 / 0	0.33 (1)
L- H	0 / 1541	0.35 (1)
K- H	-1306 / 0	0.96 (1)
K- I	0 / 1117	0.25 (1)
B- O	0 / 658	0.15 (1)

DESIGN CRITERIA

SPECIFIED LOADS:

TOP CH.	LL	=	23.3	PSF
	DL	=	6.0	PSF
BOT CH.	LL	=	0.0	PSF
	DL	=	7.4	PSF
TOTAL LOAD		=	36.7	PSF

SPACING = 24.0 IN. C/C

LOADING IN FLAT SECTION BASED ON A SLOPE OF 2.00/12 MINIMUM

THIS TRUSS IS DESIGNED FOR RESIDENTIAL OR SMALL BUILDING REQUIREMENTS OF PART 9, NBCC 2010, NBCC 2015

THIS DESIGN COMPLIES WITH:
- PART 9 OF BCBC 2018 , OBC 2012 , ABC 2019
- CSA 086-09, CSA 086-14
- TPIC 2011, TPIC 2014

(55 % OF 27.2 P.S.F. G.S.L. PLUS 8.4 P.S.F. RAIN LOAD) EQUALS 23.3 P.S.F. SPECIFIED ROOF LIVE LOAD

ALLOWABLE DEFL.(LL)= L/360 (0.79")
CALCULATED VERT. DEFL.(LL) = L/ 999 (0.09")
ALLOWABLE DEFL.(TL)= L/360 (0.79")
CALCULATED VERT. DEFL.(TL) = L/ 999 (0.22")

CSI: TC=0.77/1.00 (C-D:1) , BC=0.34/1.00 (N-O:4) , WB=0.96/1.00 (H-K:1) , SSI=0.33/1.00 (C-D:1)

DOL LUMBER=1.00 NAIL=1.00 LS BEND=1.10 COMP=1.10 SHEAR=1.10 TENS= 1.10

COMPANION LIVE LOAD FACTOR = 1.00

TRUSS PLATE MANUFACTURER IS NOT RESPONSIBLE FOR QUALITY CONTROL IN THE TRUSS MANUFACTURING PLANT .

NAIL VALUES

PLATE	GRIP(DRY) (PSI) MAX	MIN	SHEAR (PLI) MAX	MIN	SECTION (PLI) MAX	MIN
MT20	618	354	1667	788	1987	1656

PLATE PLACEMENT TOL. = 0.250 inches

PLATE ROTATION TOL. = 5.0 Deg.

JSI GRIP= 0.89 (H) (INPUT = 0.90)
JSI METAL= 0.36 (B) (INPUT = 1.00)

JOB NAME	TRUSS NAME	QUANTITY	PLY	JOB DESC.	DRWG NO.
314238	H3T		1	TRUSS DESC. JT-39002	E-19112602

Alpa Roof Truss, Maple

Version 8.300 S Aug 9 2019 MiTek Industries, Inc. Mon Nov 11 16:22:31 2019 Page 1

ID:MF8iiriaTok7DlbpT4B71Xys4PG-jTdYbTsMfjzvEiZrkOwhD2N4Vug18MhpO_hwBjyKDBc

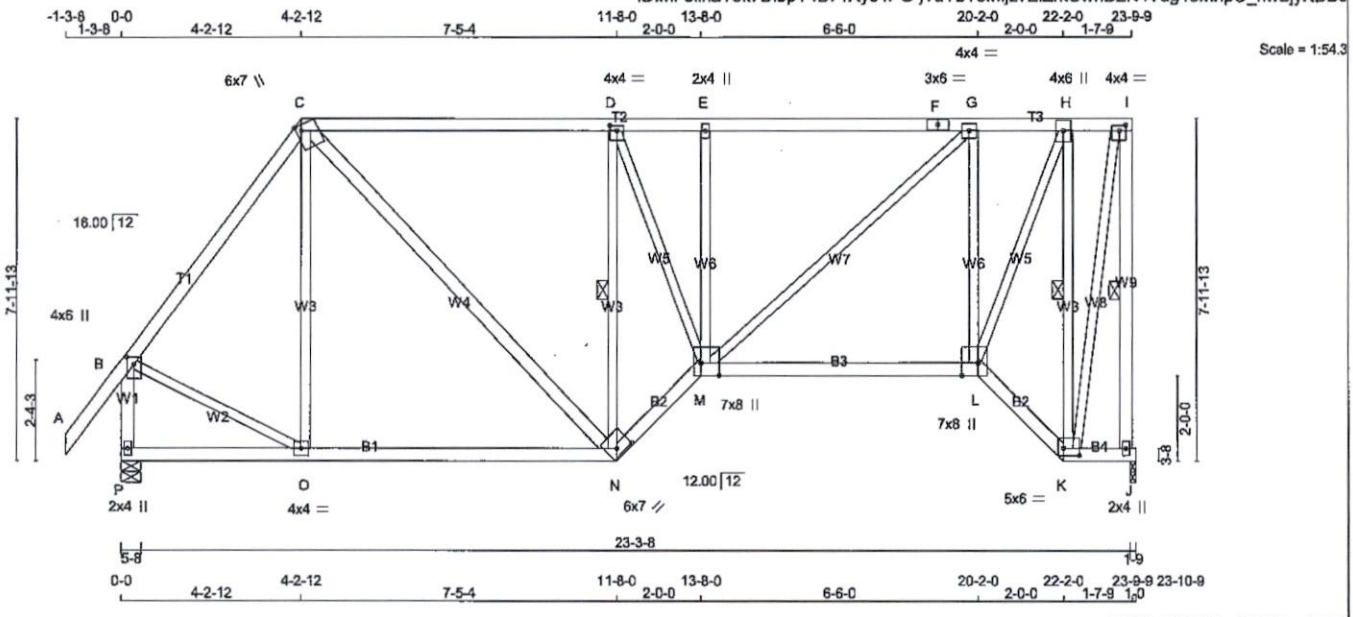

LUMBER

N. L. G. A. RULES

CHORDS	SIZE		LUMBER	DESCR.
A - C	2x4	DRY	No.2	SPF
C - F	2x4	DRY	No.2	SPF
F - I	2x4	DRY	No.2	SPF
J - I	2x4	DRY	No.2	SPF
P - B	2x4	DRY	No.2	SPF
P - N	2x4	DRY	No.2	SPF
N - M	2x4	DRY	No.2	SPF
M - L	2x4	DRY	No.2	SPF
L - K	2x4	DRY	No.2	SPF
K - J	2x4	DRY	No.2	SPF
ALL WEBS EXCEPT	2x3	DRY	No.2	SPF
C - N	2x4	DRY	No.2	SPF

DRY: SEASONED LUMBER.

PLATES (table is in inches)

JT	TYPE	PLATES	W	LEN	Y	X
B	TMVW+p	MT20	4.0	6.0	2.00	2.00
C	TTWW+m	MT20	6.0	7.0	Edge	1.50
D	TMWW-t	MT20	4.0	4.0	1.50	2.00
E	TMW+w	MT20	2.0	4.0		
F	TS-t	MT20	3.0	6.0		
G	TMWW-t	MT20	4.0	4.0		
H	TMWW+t	MT20	4.0	6.0		
I	TMVW-t	MT20	4.0	4.0	1.50	1.75
J	BMV1+p	MT20	2.0	4.0		
K	BBWW-l	MT20	5.0	6.0	2.00	4.50
L	BBWW+p	MT20	7.0	8.0	Edge	4.50
M	BBWWW+p	MT20	7.0	8.0	3.50	5.00
N	BBWW-h	MT20	6.0	7.0	2.00	4.25
O	BMWW-t	MT20	4.0	4.0		
P	BMV1+p	MT20	2.0	4.0		

Edge - INDICATES REFERENCE CORNER OF PLATE TOUCHES EDGE OF EDGE.

NOTE: Lateral brace(s) shown shall be 2x4 SPF #2

DIMENSIONS, SUPPORTS AND LOADINGS SPECIFIED BY FABRICATOR TO BE VERIFIED BY BUILDING DESIGNER

BEARINGS

JT	FACTORED GROSS REACTION VERT	HORZ	MAXIMUM FACTORED GROSS REACTION DOWN	HORZ	UPLIFT	INPUT BRG IN-SX	REQRD BRG IN-SX
J	1230	0	1230	0	0	1-9	1-8
P	1349	0	1349	0	0	5-8	2-0

UNFACTORED REACTIONS

JT	1ST LCASE COMBINED	MAX./MIN. COMPONENT REACTIONS SNOW	LIVE	PERM.LIVE	WIND	DEAD	SOIL
J	873	554 / 0	0 / 0	0 / 0	0 / 0	319 / 0	0 / 0
P	956	620 / 0	0 / 0	0 / 0	0 / 0	336 / 0	0 / 0

BEARING MATERIAL TO BE SPF NO.2 OR BETTER AT JOINT(S) J, P

BRACING

TOP CHORD TO BE SHEATHED OR MAX. PURLIN SPACING = 4.67 FT.
MAX. UNBRACED BOTTOM CHORD LENGTH = 10.00 FT OR RIGID CEILING DIRECTLY APPLIED.

ALL PITCH BREAKS AND PERIMETER CORNER JOINTS MUST BE LATERALLY RESTRAINED.

1 LATERAL BRACE(S) AT 1/ 2 LENGTH OF I-J, D-N, H-K.

END VERTICAL(S) MUST BE SHEATHED OR HAVE BRACES AS INDICATED IN THE MAX. UNBRACED LENGTH COLUMN OF THE TABLE BELOW

LOADING

TOTAL LOAD CASES: (4)

CHORDS

MEMB. FR-TO	MAX. FACTORED FORCE (LBS)	FACTORED VERT. LOAD LC1 (PLF) FROM	TO	MAX CSI (LC)	MAX. UNBRAC LENGTH
A- B	0 / 48	-84.9	-84.9	0.12 (1)	10.00
B- C	-962 / 0	-84.9	-84.9	0.30 (1)	5.96
C- D	-1015 / 0	-84.9	-84.9	0.67 (1)	5.16
D- E	-1291 / 0	-84.9	-84.9	0.60 (1)	4.67
E- F	-1295 / 0	-84.9	-84.9	0.43 (1)	5.15
F- G	-1295 / 0	-84.9	-84.9	0.43 (1)	5.15
G- H	-710 / 0	-84.9	-84.9	0.36 (1)	6.25
H- I	-231 / 0	-84.9	-84.9	0.14 (1)	6.25
J- I	-1215 / 0	0.0	0.0	0.35 (1)	5.81
P- B	-1330 / 0	0.0	0.0	0.17 (1)	7.02
P- O	0 / 0	-18.5	-18.5	0.22 (4)	10.00
O- N	0 / 572	-18.5	-18.5	0.27 (4)	10.00
N- M	0 / 1409	-18.5	-18.5	0.24 (1)	10.00
M- L	0 / 729	-18.5	-18.5	0.29 (4)	10.00
L- K	0 / 302	-18.5	-18.5	0.06 (1)	10.00
K- J	0 / 0	-18.5	-18.5	0.01 (4)	10.00

WEBS

MEMB. FR-TO	MAX. FACTORED FORCE (LBS)	MAX CSI (LC)
O- C	-121 / 60	0.15 (1)
C- N	0 / 633	0.10 (1)
N- D	-1373 / 0	0.55 (1)
D- M	0 / 846	0.19 (1)
M- E	-219 / 0	0.12 (1)
M- G	0 / 756	0.17 (1)
L- G	-1043 / 0	0.58 (1)
L- H	0 / 1424	0.32 (1)
K- H	-1265 / 0	0.51 (1)
K- I	0 / 1109	0.25 (1)
B- O	0 / 630	0.14 (1)

DESIGN CRITERIA

SPECIFIED LOADS:

TOP CH.	LL	=	23.3	PSF
	DL	=	6.0	PSF
BOT CH.	LL	=	0.0	PSF
	DL	=	7.4	PSF
TOTAL LOAD		=	36.7	PSF

SPACING = 24.0 IN. C/C

LOADING IN FLAT SECTION BASED ON A SLOPE OF 2.00/12 MINIMUM

THIS TRUSS IS DESIGNED FOR RESIDENTIAL OR SMALL BUILDING REQUIREMENTS OF PART 9, NBCC 2010, NBCC 2015

THIS DESIGN COMPLIES WITH:
- PART 9 OF BCBC 2018 , OBC 2012 , ABC 2019
- CSA 086-09, CSA 086-14
- TPIC 2011, TPIC 2014

(55 % OF 27.2 P.S.F. G.S.L. PLUS 8.4 P.S.F. RAIN LOAD) EQUALS 23.3 P.S.F. SPECIFIED ROOF LIVE LOAD

ALLOWABLE DEFL.(LL)= L/360 (0.79")
CALCULATED VERT. DEFL.(LL) = L/ 999 (0.08")
ALLOWABLE DEFL.(TL)= L/360 (0.79")
CALCULATED VERT. DEFL.(TL) = L/ 999 (0.20")

CSI: TC=0.67/1.00 (C-D:1) , BC=0.29/1.00 (L-M:4) , WB=0.58/1.00 (G-L:1) , SSI=0.29/1.00 (C-D:1)

DOL LUMBER=1.00 NAIL=1.00 LS BEND=1.10 COMP=1.10 SHEAR=1.10 TENS= 1.10

COMPANION LIVE LOAD FACTOR = 1.00

TRUSS PLATE MANUFACTURER IS NOT RESPONSIBLE FOR QUALITY CONTROL IN THE TRUSS MANUFACTURING PLANT .

NAIL VALUES

PLATE	GRIP(DRY) (PSI) MAX	MIN	SHEAR (PLI) MAX	MIN	SECTION (PLI) MAX	MIN
MT20	618	354	1667	788	1987	1656

PLATE PLACEMENT TOL. = 0.250 inches

PLATE ROTATION TOL. = 5.0 Deg.

JSI GRIP= 0.88 (I) (INPUT = 0.90)
JSI METAL= 0.37 (B) (INPUT = 1.00)

JOB NAME	TRUSS NAME	QUANTITY	PLY	JOB DESC.	DRWG NO.
314238	H4T		1	TRUSS DESC. JT-39002	E-19112603

Alpa Roof Truss, Maple

Version 8.300 S Aug 9 2019 MiTek Industries, Inc. Mon Nov 11 16:22:21 2019 Page 1
ID:MF8iriaTok7DlbpT4B71Xys4PG-0Y0mV2k40fjK29ow9IlLpxyPlsGtoqHL5QGOqlyKDBm

Scale = 1:62.0

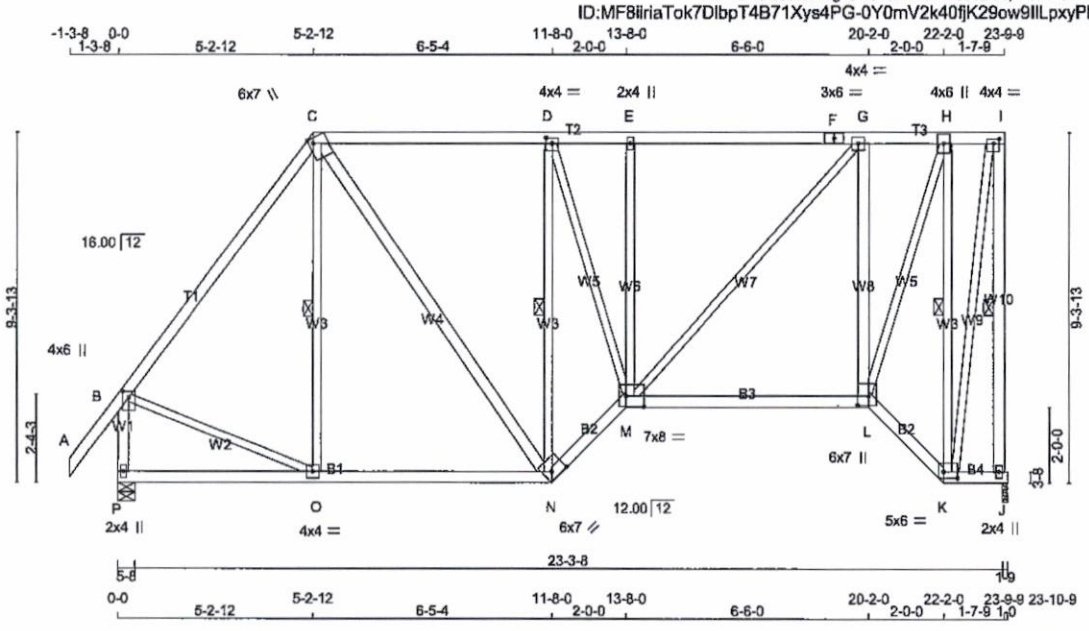

TOTAL WEIGHT = 2 X 153 = 306 lb
[M]

LUMBER
N. L. G. A. RULES

CHORDS	SIZE		LUMBER	DESCR.
A - C	2x4	DRY	No.2	SPF
C - F	2x4	DRY	No.2	SPF
F - I	2x4	DRY	No.2	SPF
J - I	2x4	DRY	No.2	SPF
P - B	2x4	DRY	No.2	SPF
P - N	2x4	DRY	No.2	SPF
N - M	2x4	DRY	No.2	SPF
M - L	2x4	DRY	No.2	SPF
L - K	2x4	DRY	No.2	SPF
K - J	2x4	DRY	No.2	SPF
ALL WEBS EXCEPT	2x3	DRY	No.2	SPF
C - N	2x4	DRY	No.2	SPF
L - G	2x4	DRY	No.2	SPF

DRY: SEASONED LUMBER.

PLATES (table is in inches)

JT	TYPE	PLATES	W	LEN	Y	X
B	TMVW+p	MT20	4.0	6.0	2.00	2.00
C	TTWW+m	MT20	6.0	7.0	Edge	1.50
D	TMWW-t	MT20	4.0	4.0	1.75	2.00
E	TMW+w	MT20	2.0	4.0		
F	TS-t	MT20	3.0	6.0		
G	TMWW-t	MT20	4.0	4.0		
H	TMWW+t	MT20	4.0	6.0		
I	TMVW-t	MT20	4.0	4.0	1.50	1.75
J	BMV1+p	MT20	2.0	4.0		
K	BBWW-l	MT20	5.0	6.0	2.00	4.50
L	BBWW+p	MT20	6.0	7.0	2.75	3.50
M	BBWWW-p	MT20	7.0	8.0	3.25	5.75
N	BBWW-h	MT20	6.0	7.0	2.25	4.50
O	BMWW-t	MT20	4.0	4.0		
P	BMV1+p	MT20	2.0	4.0		

Edge - INDICATES REFERENCE CORNER OF PLATE TOUCHES EDGE OF CHORD.

NOTE: Lateral brace(s) shown shall be 2x4 SPF #2

LICENSED PROFESSIONAL ENGINEER
11/11/2019
R. TURENNE
100157040
PROVINCE OF ONTARIO

DIMENSIONS, SUPPORTS AND LOADINGS SPECIFIED BY FABRICATOR TO BE VERIFIED BY BUILDING DESIGNER

BEARINGS

JT	FACTORED GROSS REACTION VERT	HORZ	MAXIMUM FACTORED GROSS REACTION DOWN	HORZ	UPLIFT	INPUT BRG IN-SX	REQRD BRG IN-SX
J	1230	0	1230	0	0	1-9	1-8
P	1349	0	1349	0	0	5-8	2-0

UNFACTORED REACTIONS

JT	1ST LCASE COMBINED	MAX./MIN. COMPONENT REACTIONS SNOW	LIVE	PERM.LIVE	WIND	DEAD	SOIL
J	873	554 / 0	0 / 0	0 / 0	0 / 0	319 / 0	0 / 0
P	956	620 / 0	0 / 0	0 / 0	0 / 0	336 / 0	0 / 0

BEARING MATERIAL TO BE SPF NO.2 OR BETTER AT JOINT(S) J, P

BRACING
TOP CHORD TO BE SHEATHED OR MAX. PURLIN SPACING = 5.49 FT.
MAX. UNBRACED BOTTOM CHORD LENGTH = 10.00 FT OR RIGID CEILING DIRECTLY APPLIED.

ALL PITCH BREAKS AND PERIMETER CORNER JOINTS MUST BE LATERALLY RESTRAINED.

1 LATERAL BRACE(S) AT 1/ 2 LENGTH OF I-J, C-O, D-N, H-K.

END VERTICAL(S) MUST BE SHEATHED OR HAVE BRACES AS INDICATED IN THE MAX. UNBRACED LENGTH COLUMN OF THE TABLE BELOW

LOADING
TOTAL LOAD CASES: (4)

CHORDS

MEMB. FR-TO	MAX. FORCE (LBS)	FACTORED VERT. LOAD (PLF) FROM	TO	LC1 MAX CSI (LC)	MAX. UNBRAC LENGTH
A- B	0 / 48	-84.9	-84.9	0.12 (1)	10.00
B- C	-953 / 0	-84.9	-84.9	0.49 (1)	5.73
C- D	-850 / 0	-84.9	-84.9	0.45 (1)	5.95
D- E	-1046 / 0	-84.9	-84.9	0.43 (1)	5.49
E- F	-1050 / 0	-84.9	-84.9	0.39 (1)	5.62
F- G	-1050 / 0	-84.9	-84.9	0.39 (1)	5.62
G- H	-572 / 0	-84.9	-84.9	0.35 (1)	6.25
H- I	-196 / 0	-84.9	-84.9	0.15 (1)	6.25
J- I	-1215 / 0	0.0	0.0	0.50 (1)	5.81
P- B	-1315 / 0	0.0	0.0	0.17 (1)	7.05
P- O	0 / 0	-18.5	-18.5	0.18 (4)	10.00
O- N	0 / 568	-18.5	-18.5	0.24 (4)	10.00
N- M	0 / 1183	-18.5	-18.5	0.20 (1)	10.00
M- L	0 / 593	-18.5	-18.5	0.28 (4)	10.00
L- K	0 / 257	-18.5	-18.5	0.05 (1)	10.00
K- J	0 / 0	-18.5	-18.5	0.01 (4)	10.00

WEBS

MEMB. FR-TO	MAX. FORCE (LBS)	MAX CSI (LC)
O- C	-77 / 72	0.04 (1)
C- N	0 / 483	0.08 (1)
N- D	-1161 / 0	0.66 (1)
D- M	0 / 726	0.16 (1)
M- E	-283 / 0	0.27 (1)
M- G	0 / 680	0.15 (1)
L- G	-1038 / 0	0.70 (1)
L- H	0 / 1355	0.30 (1)
K- H	-1227 / 0	0.70 (1)
K- I	0 / 1097	0.25 (1)
B- O	0 / 606	0.14 (1)

DESIGN CRITERIA

SPECIFIED LOADS:

TOP CH.	LL	=	23.3	PSF
	DL	=	6.0	PSF
BOT CH.	LL	=	0.0	PSF
	DL	=	7.4	PSF
TOTAL LOAD		=	36.7	PSF

SPACING = 24.0 IN. C/C

LOADING IN FLAT SECTION BASED ON A SLOPE OF 2.00/12 MINIMUM

THIS TRUSS IS DESIGNED FOR RESIDENTIAL OR SMALL BUILDING REQUIREMENTS OF PART 9, NBCC 2010, NBCC 2015

THIS DESIGN COMPLIES WITH:
- PART 9 OF BCBC 2018 , OBC 2012 , ABC 2019
- CSA 086-09, CSA 086-14
- TPIC 2011, TPIC 2014

(55 % OF 27.2 P.S.F. G.S.L. PLUS 8.4 P.S.F. RAIN LOAD) EQUALS 23.3 P.S.F. SPECIFIED ROOF LIVE LOAD

ALLOWABLE DEFL.(LL)= L/360 (0.79")
CALCULATED VERT. DEFL.(LL) = L/ 999 (0.07")
ALLOWABLE DEFL.(TL)= L/360 (0.79")
CALCULATED VERT. DEFL.(TL) = L/ 999 (0.19")

CSI: TC=0.50/1.00 (I-J:1) , BC=0.28/1.00 (L-M:4) , WB=0.70/1.00 (G-L:1) , SSI=0.25/1.00 (C-D:1)

DOL LUMBER=1.00 NAIL=1.00 LS BEND=1.10 COMP=1.10 SHEAR=1.10 TENS= 1.10

COMPANION LIVE LOAD FACTOR = 1.00

TRUSS PLATE MANUFACTURER IS NOT RESPONSIBLE FOR QUALITY CONTROL IN THE TRUSS MANUFACTURING PLANT .

NAIL VALUES

PLATE	GRIP(DRY) (PSI) MAX	MIN	SHEAR (PLI) MAX	MIN	SECTION (PLI) MAX	MIN
MT20	618	354	1667	788	1987	1656

PLATE PLACEMENT TOL. = 0.250 Inches

PLATE ROTATION TOL. = 5.0 Deg.

JSI GRIP= 0.86 (H) (INPUT = 0.90)
JSI METAL= 0.38 (B) (INPUT = 1.00)

JOB NAME	TRUSS NAME	QUANTITY	PLY	JOB DESC.	DRWG NO.
314238	H5T		1	TRUSS DESC. JT-39002	E-19112604

Alpa Roof Truss, Maple

Version 8.300 S Aug 9 2019 MiTek Industries, Inc. Mon Nov 11 16:24:32 2019 Page 1
ID:MF8iIriaTok7DlbpT4B71Xys4PG-gtQl_rKF9vDkGIJ5Klb3dZtlbfzf_3ldDlVpxCyKD9j

Scale = 1:68.3

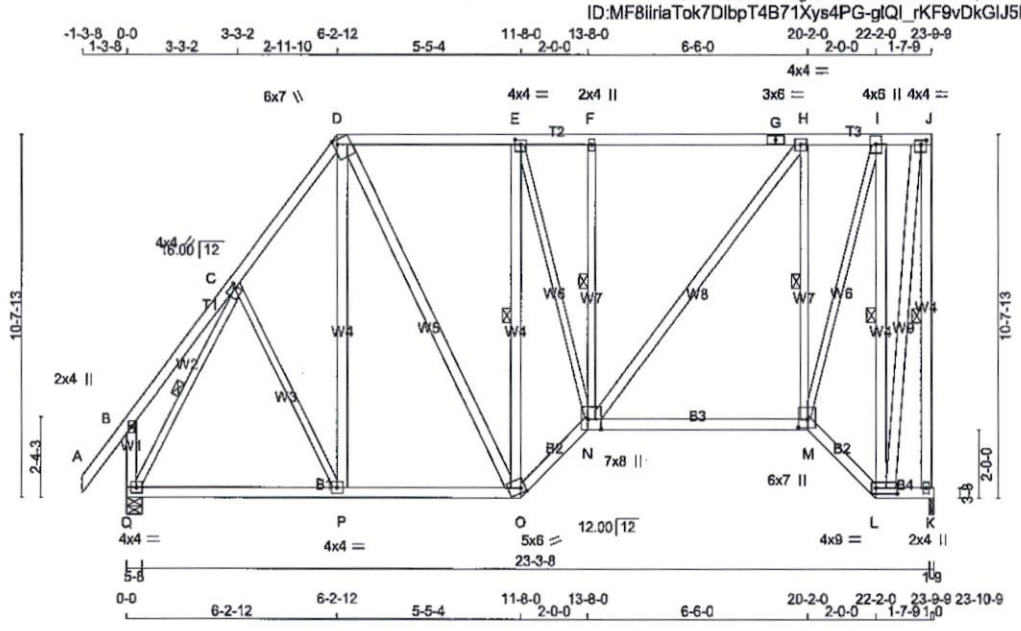

TOTAL WEIGHT = 2 X 186 = 372 lb [M]

LUMBER

N. L. G. A. RULES

CHORDS	SIZE		LUMBER	DESCR.
A - D	2x4	DRY	No.2	SPF
D - G	2x4	DRY	No.2	SPF
G - J	2x4	DRY	No.2	SPF
K - J	2x4	DRY	No.2	SPF
Q - B	2x4	DRY	No.2	SPF
Q - O	2x4	DRY	No.2	SPF
O - N	2x4	DRY	No.2	SPF
N - M	2x4	DRY	No.2	SPF
M - L	2x4	DRY	No.2	SPF
L - K	2x4	DRY	No.2	SPF
ALL WEBS EXCEPT	2x4	DRY	No.2	SPF
E - N	2x3	DRY	No.2	SPF
N - F	2x3	DRY	No.2	SPF
M - H	2x3	DRY	No.2	SPF
M - I	2x3	DRY	No.2	SPF
Q - C	2x3	DRY	No.2	SPF
C - P	2x3	DRY	No.2	SPF

DRY: SEASONED LUMBER.

PLATES (table is in inches)

JT	TYPE	PLATES	W	LEN	Y	X
B	TMV+p	MT20	2.0	4.0		
C	TMWW-t	MT20	4.0	4.0	1.50	1.00
D	TTWW+m	MT20	6.0	7.0	Edge	1.50
E	TMWW-t	MT20	4.0	4.0	1.75	2.00
F	TMW+w	MT20	2.0	4.0		
G	TS-t	MT20	3.0	6.0		
H	TMWW-t	MT20	4.0	4.0		
I	TMWW+t	MT20	4.0	6.0		
J	TMVW-t	MT20	4.0	4.0	1.50	1.75
K	BMV1+p	MT20	2.0	4.0		
L	BBWW-t	MT20	4.0	9.0	2.00	7.50
M	BBWW+p	MT20	6.0	7.0	2.75	3.25
N	BBWWW+p	MT20	7.0	8.0	Edge	4.75
O	BBWW-m	MT20	5.0	6.0	1.75	1.75
P	BMWW-t	MT20	4.0	4.0		
Q	BMVW1-t	MT20	4.0	4.0		

NOTE: Lateral brace(s) shown shall be 2x4 SPF #2

LICENSED PROFESSIONAL ENGINEER
11/11/2019
R. TURENNE
100157040
PROVINCE OF ONTARIO

DIMENSIONS, SUPPORTS AND LOADINGS SPECIFIED BY FABRICATOR TO BE VERIFIED BY BUILDING DESIGNER

BEARINGS

JT	FACTORED GROSS REACTION VERT	HORZ	MAXIMUM FACTORED GROSS REACTION DOWN	HORZ	UPLIFT	INPUT BRG IN-SX	REQRD BRG IN-SX
K	1230	0	1230	0	0	1-9	1-8
Q	1349	0	1349	0	0	5-8	1-8

UNFACTORED REACTIONS

JT	1ST LCASE COMBINED	MAX/MIN. COMPONENT REACTIONS SNOW	LIVE	PERM.LIVE	WIND	DEAD	SOIL
K	873	554 / 0	0 / 0	0 / 0	0 / 0	319 / 0	0 / 0
Q	956	620 / 0	0 / 0	0 / 0	0 / 0	336 / 0	0 / 0

BEARING MATERIAL TO BE SPF NO.2 OR BETTER AT JOINT(S) K, Q

BRACING

TOP CHORD TO BE SHEATHED OR MAX. PURLIN SPACING = 6.04 FT.
MAX. UNBRACED BOTTOM CHORD LENGTH = 10.00 FT OR RIGID CEILING DIRECTLY APPLIED.

ALL PITCH BREAKS AND PERIMETER CORNER JOINTS MUST BE LATERALLY RESTRAINED.

1 LATERAL BRACE(S) AT 1/ 2 LENGTH OF J-K, E-O, F-N, H-M, I-L, C-Q.

END VERTICAL(S) MUST BE SHEATHED OR HAVE BRACES AS INDICATED IN THE MAX. UNBRACED LENGTH COLUMN OF THE TABLE BELOW

LOADING

TOTAL LOAD CASES: (4)

CHORDS

MEMB. FR-TO	MAX. FORCE (LBS)	FACTORED VERT. LOAD (PLF) FROM	TO	LC1	MAX CSI (LC)	MAX. UNBRAC LENGTH
A- B	0 / 48	-84.9	-84.9	0.12 (1)	10.00	
B- C	0 / 23	-84.9	-84.9	0.13 (1)	10.00	
C- D	-955 / 0	-84.9	-84.9	0.14 (1)	6.19	
D- E	-730 / 0	-84.9	-84.9	0.30 (1)	6.25	
E- F	-881 / 0	-84.9	-84.9	0.28 (1)	6.15	
F- G	-885 / 0	-84.9	-84.9	0.36 (1)	6.04	
G- H	-885 / 0	-84.9	-84.9	0.36 (1)	6.04	
H- I	-480 / 0	-84.9	-84.9	0.32 (1)	6.25	
I- J	-174 / 0	-84.9	-84.9	0.10 (1)	6.25	
K- J	-1215 / 0	0.0	0.0	0.69 (1)	5.81	
Q- B	-221 / 0	0.0	0.0	0.03 (1)	7.81	
Q- P	0 / 549	-18.5	-18.5	0.23 (4)	10.00	
P- O	0 / 556	-18.5	-18.5	0.24 (4)	10.00	
O- N	0 / 1014	-18.5	-18.5	0.18 (1)	10.00	
N- M	0 / 492	-18.5	-18.5	0.27 (4)	10.00	
M- L	0 / 222	-18.5	-18.5	0.05 (1)	10.00	
L- K	0 / 0	-18.5	-18.5	0.01 (4)	10.00	

WEBS

MEMB. FR-TO	MAX. FORCE (LBS)	MAX CSI (LC)
P- D	0 / 120	0.03 (4)
D- O	0 / 373	0.06 (1)
O- E	-990 / 0	0.57 (1)
E- N	0 / 657	0.15 (1)
N- F	-352 / 0	0.17 (1)
N- H	0 / 645	0.10 (1)
M- H	-1017 / 0	0.49 (1)
M- I	0 / 1293	0.29 (1)
L- I	-1229 / 0	0.70 (1)
L- J	0 / 1119	0.18 (1)
Q- C	-1212 / 0	0.39 (1)
C- P	0 / 36	0.01 (4)

DESIGN CRITERIA

SPECIFIED LOADS:

TOP CH.	LL	=	23.3	PSF
	DL	=	6.0	PSF
BOT CH.	LL	=	0.0	PSF
	DL	=	7.4	PSF
TOTAL LOAD		=	36.7	PSF

SPACING = 24.0 IN. C/C

LOADING IN FLAT SECTION BASED ON A SLOPE OF 2.00/12 MINIMUM

THIS TRUSS IS DESIGNED FOR RESIDENTIAL OR SMALL BUILDING REQUIREMENTS OF PART 9, NBCC 2010, NBCC 2015

THIS DESIGN COMPLIES WITH:
- PART 9 OF BCBC 2018 , OBC 2012 , ABC 2019
- CSA 086-09, CSA 086-14
- TPIC 2011, TPIC 2014

(55 % OF 27.2 P.S.F. G.S.L. PLUS 8.4 P.S.F. RAIN LOAD) EQUALS 23.3 P.S.F. SPECIFIED ROOF LIVE LOAD

ALLOWABLE DEFL.(LL)= L/360 (0.79")
CALCULATED VERT. DEFL.(LL) = L/ 999 (0.06")
ALLOWABLE DEFL.(TL)= L/360 (0.79")
CALCULATED VERT. DEFL.(TL) = L/ 999 (0.18")

CSI: TC=0.69/1.00 (J-K:1) , BC=0.27/1.00 (M-N:4) , WB=0.70/1.00 (I-L:1) , SSI=0.21/1.00 (F-H:1)

DOL LUMBER=1.00 NAIL=1.00 LS BEND=1.10 COMP=1.10 SHEAR=1.10 TENS= 1.10

COMPANION LIVE LOAD FACTOR = 1.00

AUTOSOLVE RIGHT HEEL ONLY

TRUSS PLATE MANUFACTURER IS NOT RESPONSIBLE FOR QUALITY CONTROL IN THE TRUSS MANUFACTURING PLANT .

NAIL VALUES

PLATE	GRIP(DRY) (PSI) MAX	MIN	SHEAR (PLI) MAX	MIN	SECTION (PLI) MAX	MIN
MT20	618	354	1667	788	1987	1656

PLATE PLACEMENT TOL. = 0.250 Inches

PLATE ROTATION TOL. = 5.0 Deg.

JSI GRIP= 0.90 (Q) (INPUT = 0.90)
JSI METAL= 0.45 (C) (INPUT = 1.00)

CONTINUED ON PAGE 2

JOB NAME	TRUSS NAME	QUANTITY	PLY	JOB DESC.		DRWG NO.
310385	J1		1	TRUSS DESC.	JT-39002	E-19072240

Alpa Roof Truss, Maple

Version 8.300 S May 10 2019 MiTek Industries, Inc. Wed Jul 10 10:24:38 2019 Page 1
ID:MF8ilriaTok7DlbpT4B71Xys4PG-?PM6jlcxWAL?KwbuelI7hpk67VBo4mqNngkWoHtyzW1N
Scale = 1:31.2

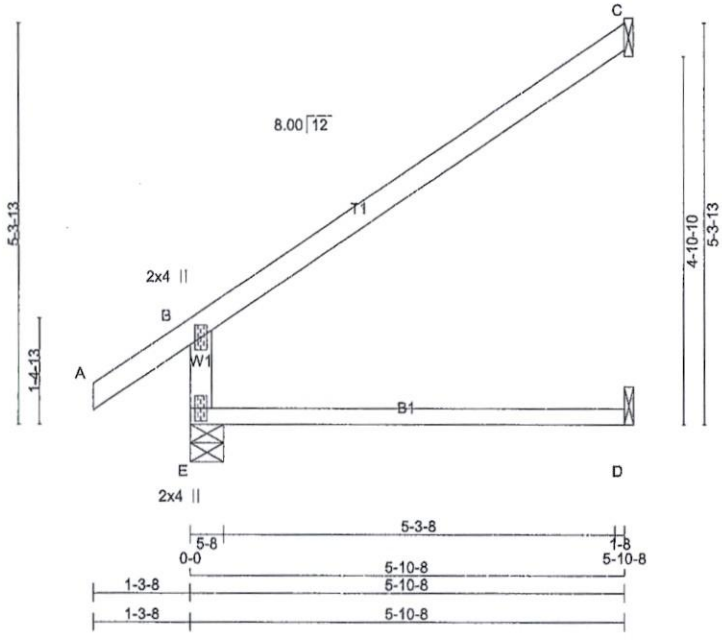

TOTAL WEIGHT = 24 X 16 = 384 lb

LUMBER
N. L. G. A. RULES

CHORDS	SIZE		LUMBER	DESCR.
E - B	2x4	DRY	No.2	SPF
A - C	2x4	DRY	No.2	SPF
E - D	2x3	DRY	No.2	SPF

DRY: SEASONED LUMBER.

PLATES (table is in inches)

JT	TYPE	PLATES	W	LEN	Y	X
B	TMV+p	MT20	2.0	4.0		
E	BMV1+p	MT20	2.0	4.0		

NOTES- (1)

NOTE: Lateral brace(s) shown shall be 2x4 SPF #2

LICENSED PROFESSIONAL ENGINEER
07/10/2019
R. TURENNE
100157040
PROVINCE OF ONTARIO

DIMENSIONS, SUPPORTS AND LOADINGS SPECIFIED BY FABRICATOR TO BE VERIFIED BY BUILDING DESIGNER

BEARINGS

JT	FACTORED GROSS REACTION VERT	HORZ	MAXIMUM FACTORED GROSS REACTION DOWN	HORZ	UPLIFT	INPUT BRG IN-SX	REQRD BRG IN-SX
E	494	0	494	0	0	5-8	1-8
C	187	0	187	0	0	1-8	1-8
D	43	0	48	0	0	1-8	1-8

SEE MITEK STANDARD DETAIL B97791H FOR CONNECTION TO JOINT(S) C , D

UNFACTORED REACTIONS

JT	1ST LCASE COMBINED	MAX./MIN. COMPONENT REACTIONS SNOW	LIVE	PERM.LIVE	WIND	DEAD	SOIL
E	348	235 / 0	0 / 0	0 / 0	0 / 0	113 / 0	0 / 0
C	129	103 / 0	0 / 0	0 / 0	0 / 0	26 / 0	0 / 0
D	34	0 / 0	0 / 0	0 / 0	0 / 0	34 / 0	0 / 0

BEARING MATERIAL TO BE SPF NO.2 OR BETTER AT JOINT(S) E

BRACING
TOP CHORD TO BE SHEATHED OR MAX. PURLIN SPACING = 6.25 FT.
MAX. UNBRACED BOTTOM CHORD LENGTH = 10.00 FT OR RIGID CEILING DIRECTLY APPLIED.

ALL PITCH BREAKS AND PERIMETER CORNER JOINTS MUST BE LATERALLY RESTRAINED.

LOADING
TOTAL LOAD CASES: (4)

CHORDS

MEMB. FR-TO	MAX. FACTORED FORCE (LBS)	FACTORED VERT. LOAD (PLF) FROM	TO	LC1 MAX CSI (LC)	MAX. UNBRAC LENGTH
E- B	-428 / 0	0.0	0.0	0.16 (4)	7.81
A- B	0 / 32	-84.9	-84.9	0.11 (1)	10.00
B- C	-35 / 0	-84.9	-84.9	0.50 (1)	6.25
E- D	0 / 0	-18.5	-18.5	0.30 (4)	10.00

WEBS

MEMB. FR-TO	MAX. FACTORED FORCE (LBS)	MAX CSI (LC)

DESIGN CRITERIA

SPECIFIED LOADS:

TOP CH.	LL =	23.3	PSF
	DL =	6.0	PSF
BOT CH.	LL =	0.0	PSF
	DL =	7.4	PSF
TOTAL LOAD	=	36.7	PSF

SPACING = 24.0 IN. C/C

THIS TRUSS IS DESIGNED FOR RESIDENTIAL OR SMALL BUILDING REQUIREMENTS OF PART 9, NBCC 2010, NBCC 2015

THIS DESIGN COMPLIES WITH:
- PART 9 OF BCBC 2018 , OBC 2012
- CSA 086-09, CSA 086-14
- TPIC 2011, TPIC 2014

DESIGN ASSUMPTIONS
-OVERHANG NOT TO BE ALTERED OR CUT OFF.

(55 % OF 27.2 P.S.F. G.S.L. PLUS 8.4 P.S.F. RAIN LOAD) EQUALS 23.3 P.S.F. SPECIFIED ROOF LIVE LOAD

ALLOWABLE DEFL.(LL)= L/360 (0.20")
CALCULATED VERT. DEFL.(LL) = L/ 999 (0.00")
ALLOWABLE DEFL.(TL)= L/360 (0.20")
CALCULATED VERT. DEFL.(TL) = L/ 932 (0.08")

CSI: TC=0.50/1.00 (B-C:1) , BC=0.30/1.00 (D-E:4) , WB=0.00/1.00 (n/a:0) , SSI=0.20/1.00 (B-C:1)

DOL LUMBER=1.00 NAIL=1.00 LS BEND=1.10 COMP=1.10 SHEAR=1.10 TENS= 1.10

COMPANION LIVE LOAD FACTOR = 1.00

TRUSS PLATE MANUFACTURER IS NOT RESPONSIBLE FOR QUALITY CONTROL IN THE TRUSS MANUFACTURING PLANT .

NAIL VALUES

PLATE	GRIP(DRY) (PSI) MAX	MIN	SHEAR (PLI) MAX	MIN	SECTION (PLI) MAX	MIN
MT20	618	354	1667	788	1987	1656

PLATE PLACEMENT TOL. = 0.250 Inches

PLATE ROTATION TOL. = 5.0 Deg.

JSI GRIP= 0.28 (B) (INPUT = 0.90)
JSI METAL= 0.22 (B) (INPUT = 1.00)

JOB NAME	TRUSS NAME	QUANTITY	PLY	JOB DESC.	DRWG NO.
310386	H1	1	2	TRUSS DESC. JT-39002	E-19072246

Alpa Roof Truss, Maple

ID:MF8IlriaTok7DlbpT4B71Xys4PG-DTtmIV0PnNdam8hlxSHxAshc9aCaBOTHTMMq4JyzTDO

Scale = 1:42.8

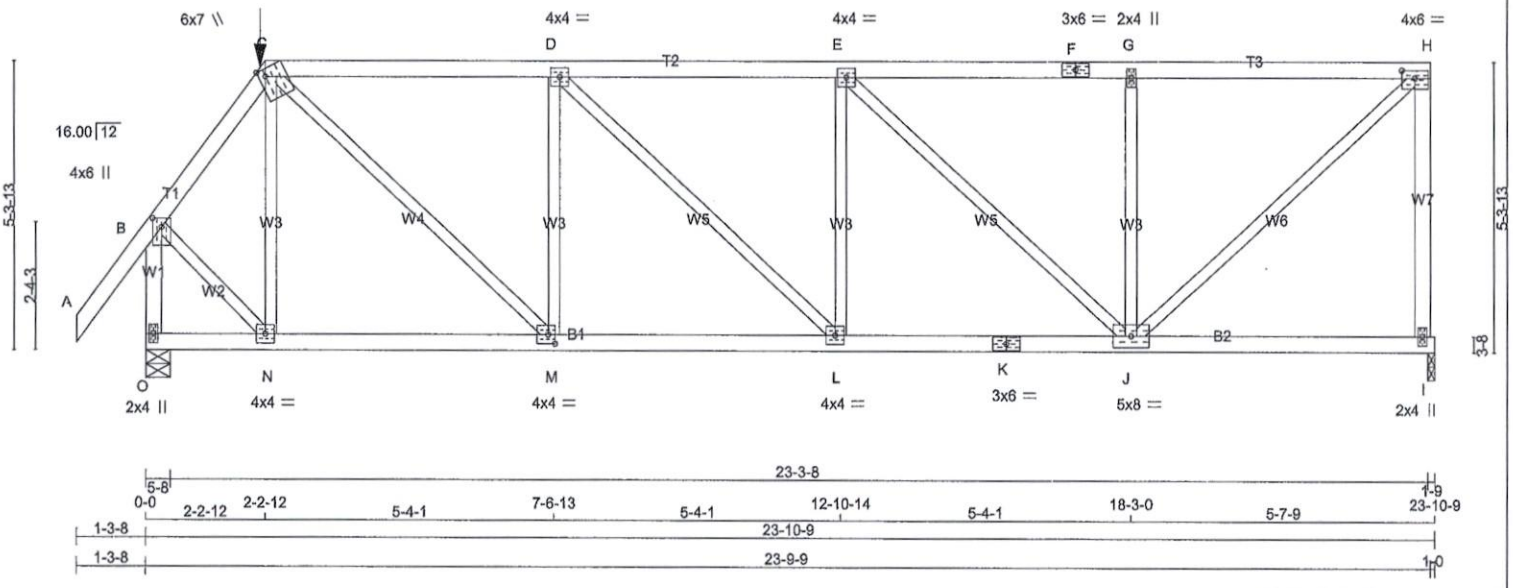

TOTAL WEIGHT = 4 X 107 = 428 lb

[M]

LUMBER

N. L. G. A. RULES

CHORDS	SIZE		LUMBER	DESCR.
A - C	2x4	DRY	No.2	SPF
C - F	2x4	DRY	No.2	SPF
F - H	2x4	DRY	No.2	SPF
I - H	2x4	DRY	No.2	SPF
O - B	2x4	DRY	No.2	SPF
O - K	2x4	DRY	No.2	SPF
K - I	2x4	DRY	No.2	SPF
ALL WEBS EXCEPT	2x3	DRY	No.2	SPF

DRY: SEASONED LUMBER.

DESIGN CONSISTS OF 2 TRUSSES BUILT SEPARATELY THEN FASTENED TOGETHER AS FOLLOWS:

CHORDS	#ROWS	SURFACE SPACING (IN)	LOAD(PLF)
TOP CHORDS : (0.122"X3") SPIRAL NAILS			
A- C	1	12	SIDE(61.0)
C- F	1	12	SIDE(41.1)
F- H	1	12	SIDE(41.1)
H- I	1	12	TOP
O- B	1	12	TOP
BOTTOM CHORDS : (0.122"X3") SPIRAL NAILS			
O- K	1	12	SIDE(10.0)
K- I	1	12	SIDE(10.0)
WEBS : (0.122"X3") SPIRAL NAILS			
2x3	1	6	

NAILS TO BE DRIVEN FROM ONE SIDE ONLY.

GIRDER NAILING ASSUMES NAILED HANGERS ARE FASTENED WITH MIN. 3-0 INCH NAILS.

TOP - COMPONENTS ARE LOADED FROM THE TOP AND MUST BE PLACED ON TOP EDGE OF ALL PLIES FOR THE LOAD TO BE TRANSFERRED TO EACH PLY.

NOTE: Lateral brace(s) shown shall be 2x4 SPF #2

LICENSED PROFESSIONAL ENGINEER
07/10/2019
R. TURENNE
100157040
PROVINCE OF ONTARIO

DIMENSIONS, SUPPORTS AND LOADINGS SPECIFIED BY FABRICATOR TO BE VERIFIED BY BUILDING DESIGNER

BEARINGS

JT	FACTORED GROSS REACTION VERT	HORZ	MAXIMUM FACTORED GROSS REACTION DOWN	HORZ	UPLIFT	INPUT BRG IN-SX	REQRD BRG IN-SX
I	2426	0	2426	0	0	1-9	1-8
O	2491	0	2491	0	0	5-8	1-14

UNFACTORED REACTIONS

JT	1ST LCASE COMBINED	MAX./MIN. COMPONENT REACTIONS SNOW	LIVE	PERM.LIVE	WIND	DEAD	SOIL
I	1722	1093 / 0	0 / 0	0 / 0	0 / 0	628 / 0	0 / 0
O	1767	1129 / 0	0 / 0	0 / 0	0 / 0	638 / 0	0 / 0

BEARING MATERIAL TO BE SPF NO.2 OR BETTER AT JOINT(S) I, O

BRACING

TOP CHORD TO BE SHEATHED OR MAX. PURLIN SPACING = 4.84 FT.
MAX. UNBRACED BOTTOM CHORD LENGTH = 10.00 FT OR RIGID CEILING DIRECTLY APPLIED.

ALL PITCH BREAKS AND PERIMETER CORNER JOINTS MUST BE LATERALLY RESTRAINED.

LOADING

TOTAL LOAD CASES: (4)

CHORDS

MEMB. FR-TO	MAX. FACTORED FORCE (LBS)	FACTORED VERT. LOAD LC1 (PLF) FROM	TO	MAX CSI (LC)	MAX. UNBRAC LENGTH
A- B	0 / 48	-84.9	-84.9	0.07 (1)	10.00
B- C	-1738 / 0	-84.9	-84.9	0.05 (1)	6.25
C- D	-2612 / 0	-167.1	-167.1	0.43 (1)	5.08
D- E	-2932 / 0	-167.1	-167.1	0.44 (1)	4.84
E- F	-2176 / 0	-167.1	-167.1	0.43 (1)	5.43
F- G	-2176 / 0	-167.1	-167.1	0.43 (1)	5.43
G- H	-2176 / 0	-167.1	-167.1	0.43 (1)	5.43
I- H	-2342 / 0	0.0	0.0	0.59 (1)	7.34
O- B	-2480 / 0	0.0	0.0	0.17 (1)	7.17
O- N	0 / 0	-36.4	-36.4	0.08 (4)	10.00
N- M	0 / 1017	-36.4	-36.4	0.16 (4)	10.00
M- L	0 / 2612	-36.4	-36.4	0.29 (1)	10.00
L- K	0 / 2932	-36.4	-36.4	0.33 (1)	10.00
K- J	0 / 2932	-36.4	-36.4	0.33 (1)	10.00
J- I	0 / 0	-36.4	-36.4	0.14 (4)	10.00

WEBS

MEMB. FR-TO	MAX. FACTORED FORCE (LBS)	MAX CSI (LC)
N- C	-699 / 0	0.15 (1)
C- M	0 / 2180	0.27 (1)
M- D	-1292 / 0	0.28 (1)
D- L	0 / 439	0.05 (1)
L- E	-114 / 94	0.02 (1)
E- J	-1039 / 0	0.55 (1)
J- G	-1038 / 0	0.23 (1)
J- H	0 / 2936	0.36 (1)
B- N	0 / 1348	0.17 (1)

FACTORED CONCENTRATED LOADS (LBS)

JT	LOC.	LC1	MAX-	MAX+	FACE	DIR.	TYPE	HEEL	CONN.
C	2-2-12	-138	-138	---	FRONT	VERT	TOTAL	---	C1

CONNECTION REQUIREMENTS

1) C1: A SUITABLE HANGER/MECHANICAL CONNECTION IS REQUIRED.

DESIGN CRITERIA

SPECIFIED LOADS:

TOP CH.	LL =	23.3	PSF
	DL =	6.0	PSF
BOT CH.	LL =	0.0	PSF
	DL =	7.4	PSF
TOTAL LOAD	=	36.7	PSF

SPACING = 24.0 IN. C/C

LOADING IN FLAT SECTION BASED ON A SLOPE OF 2.00/12 MINIMUM

GIRDER TYPE: CPrimeHip
LEFT SETBACK = 2-2-12
RIGHT SETBACK = 0-0
END SETBACK = 5-10-8
END WALL WIDTH = 0-0
CORNER FRAMING TYPE: CONVENTIONAL
END JACK TYPE: CONVENTIONAL
APPLIED TO FRONT SIDE
- ADDT'L LOADS BASED ON 55 % OF GSL.

THIS TRUSS IS DESIGNED FOR RESIDENTIAL OR SMALL BUILDING REQUIREMENTS OF PART 9, NBCC 2010, NBCC 2015

THIS DESIGN COMPLIES WITH:
- PART 9 OF BCBC 2018 , OBC 2012
- CSA 086-09, CSA 086-14
- TPIC 2011, TPIC 2014

(55 % OF 27.2 P.S.F. G.S.L. PLUS 8.4 P.S.F. RAIN LOAD) EQUALS 23.3 P.S.F. SPECIFIED ROOF LIVE LOAD

ALLOWABLE DEFL.(LL)= L/360 (0.79")
CALCULATED VERT. DEFL.(LL) = L/ 999 (0.05")
ALLOWABLE DEFL.(TL)= L/360 (0.79")
CALCULATED VERT. DEFL.(TL) = L/ 999 (0.10")

CSI: TC=0.59/1.00 (H-I:1) , BC=0.33/1.00 (J-L:1) , WB=0.55/1.00 (E-J:1) , SSI=0.24/1.00 (G-H:1)

DOL LUMBER=1.00 NAIL=1.00 LS BEND=1.00 COMP=1.00 SHEAR=1.00 TENS= 1.00

COMPANION LIVE LOAD FACTOR = 1.00

TRUSS PLATE MANUFACTURER IS NOT RESPONSIBLE FOR QUALITY CONTROL IN THE TRUSS MANUFACTURING PLANT .

NAIL VALUES

PLATE	GRIP(DRY) (PSI) MAX	MIN	SHEAR (PLI) MAX	MIN	SECTION (PLI) MAX	MIN
MT20	618	354	1667	788	1987	1656

PLATE PLACEMENT TOL. = 0.250 Inches

PLATE ROTATION TOL. = 5.0 Deg.

JSI GRIP= 0.84 (M) (INPUT = 0.90)
JSI METAL= 0.47 (K) (INPUT = 1.00)

CONTINUED ON PAGE 2

JOB NAME	TRUSS NAME	QUANTITY	PLY	JOB DESC.	DRWG NO.
310386	H1	1	2	TRUSS DESC. JT-39002	E-19072246(2)

Alpa Roof Truss, Maple

Version 8.300 S May 10 2019 MiTek Industries, Inc. Wed Jul 10 13:36:38 2019 Page 2
ID:MF8iIrIaTok7DIbpT4B71Xys4PG-hfR8Wr11YhIROIGxV9pAj4EnuzXpwrjQI05Nc9yzTDN

PLATES (table is in inches)

JT	TYPE	PLATES	W	LEN	Y	X
B	TMVW+p	MT20	4.0	6.0	2.00	2.00
C	TTWW+m	MT20	6.0	7.0	Edge	1.50
D	TMWW-t	MT20	4.0	4.0		
E	TMWW-t	MT20	4.0	4.0		
F	TS-t	MT20	3.0	6.0		
G	TMW+w	MT20	2.0	4.0		
H	TMVW-t	MT20	4.0	6.0	1.75	3.00
I	BMV1+p	MT20	2.0	4.0		
J	BMWWW-t	MT20	5.0	8.0		
K	BS-t	MT20	3.0	6.0		
L	BMWW-t	MT20	4.0	4.0		
M	BMWW-t	MT20	4.0	4.0	2.00	1.50
N	BMWW-t	MT20	4.0	4.0		
O	BMV1+p	MT20	2.0	4.0		

Edge - INDICATES REFERENCE CORNER OF PLATE TOUCHES EDGE OF CHORD.

NOTES- (1)

NOTE: Lateral brace(s) shown shall be 2x4 SPF #2

LICENSED PROFESSIONAL ENGINEER
07/10/2019
R. TURENNE
100157040
PROVINCE OF ONTARIO

JOB NAME	TRUSS NAME	QUANTITY	PLY	JOB DESC.	DRWG NO.
310386	H2	1	1	TRUSS DESC. JT-39002	E-19072247

Alpa Roof Truss, Maple

Version 8.300 S May 10 2019 MiTek Industries, Inc. Wed Jul 10 13:36:40 2019 Page 1
ID:MF8iIriaTok7DlbpT4B71Xys4PG-e2ZuxW2I4I?9dbQKcareoVJ7onETOmPj9KaUh2yzTDL
Scale = 1:42.6

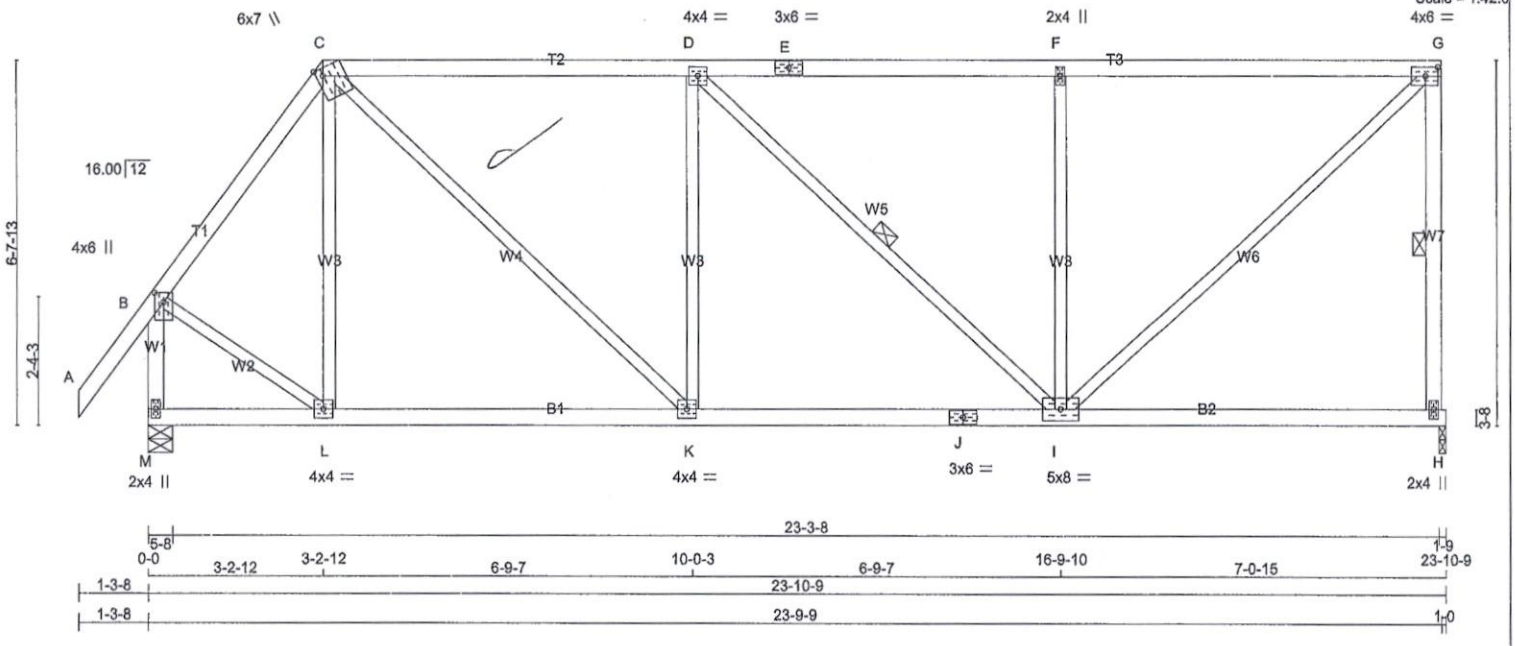

TOTAL WEIGHT = 4 X 108 = 434 lb
[M]

LUMBER
N. L. G. A. RULES

CHORDS	SIZE		LUMBER	DESCR.
A - C	2x4	DRY	No.2	SPF
C - E	2x4	DRY	No.2	SPF
E - G	2x4	DRY	No.2	SPF
H - G	2x4	DRY	No.2	SPF
M - B	2x4	DRY	No.2	SPF
M - J	2x4	DRY	No.2	SPF
J - H	2x4	DRY	No.2	SPF
ALL WEBS EXCEPT	2x3	DRY	No.2	SPF

DRY: SEASONED LUMBER.

PLATES (table is In Inches)

JT	TYPE	PLATES	W	LEN	Y	X
B	TMVW+p	MT20	4.0	6.0	2.00	2.00
C	TTWW+m	MT20	6.0	7.0	Edge	1.50
D	TMWW-t	MT20	4.0	4.0		
E	TS-t	MT20	3.0	6.0		
F	TMW+w	MT20	2.0	4.0		
G	TMVW-t	MT20	4.0	6.0	2.00	2.75
H	BMV1+p	MT20	2.0	4.0		
I	BMWWW-t	MT20	5.0	8.0		
J	BS-t	MT20	3.0	6.0		
K	BMWW-t	MT20	4.0	4.0		
L	BMWW-t	MT20	4.0	4.0		
M	BMV1+p	MT20	2.0	4.0		

Edge - INDICATES REFERENCE CORNER OF PLATE TOUCHES EDGE OF CHORD.

NOTES- (1)

NOTE: Lateral brace(s) shown shall be 2x4 SPF #2

LICENSED PROFESSIONAL ENGINEER
07/10/2019
R. TURENNE
100157040
PROVINCE OF ONTARIO

DIMENSIONS, SUPPORTS AND LOADINGS SPECIFIED BY FABRICATOR TO BE VERIFIED BY BUILDING DESIGNER

BEARINGS

JT	FACTORED GROSS REACTION VERT	HORZ	MAXIMUM FACTORED GROSS REACTION DOWN	HORZ	UPLIFT	INPUT BRG IN-SX	REQRD BRG IN-SX
H	1230	0	1230	0	0	1-9	1-8
M	1349	0	1349	0	0	5-8	2-0

UNFACTORED REACTIONS

JT	1ST LCASE COMBINED	SNOW	LIVE	PERM.LIVE	WIND	DEAD	SOIL
		MAX./MIN. COMPONENT REACTIONS					
H	873	554 / 0	0 / 0	0 / 0	0 / 0	319 / 0	0 / 0
M	956	620 / 0	0 / 0	0 / 0	0 / 0	336 / 0	0 / 0

BEARING MATERIAL TO BE SPF NO.2 OR BETTER AT JOINT(S) H, M

BRACING
TOP CHORD TO BE SHEATHED OR MAX. PURLIN SPACING = 4.99 FT.
MAX. UNBRACED BOTTOM CHORD LENGTH = 10.00 FT OR RIGID CEILING DIRECTLY APPLIED.

ALL PITCH BREAKS AND PERIMETER CORNER JOINTS MUST BE LATERALLY RESTRAINED.

1 LATERAL BRACE(S) AT 1/ 2 LENGTH OF G-H, D-I.

END VERTICAL(S) MUST BE SHEATHED OR HAVE BRACES AS INDICATED IN THE MAX. UNBRACED LENGTH COLUMN OF THE TABLE BELOW

LOADING
TOTAL LOAD CASES: (4)

CHORDS

MEMB. FR-TO	MAX. FACTORED FORCE (LBS)	FACTORED VERT. LOAD (PLF) FROM	TO	LC1	MAX CSI (LC)	MAX. UNBRAC LENGTH
A- B	0 / 48	-84.9	-84.9	0.12 (1)	10.00	
B- C	-935 / 0	-84.9	-84.9	0.17 (1)	6.20	
C- D	-1191 / 0	-84.9	-84.9	0.61 (1)	4.99	
D- E	-1031 / 0	-84.9	-84.9	0.62 (1)	5.22	
E- F	-1031 / 0	-84.9	-84.9	0.62 (1)	5.22	
F- G	-1031 / 0	-84.9	-84.9	0.63 (1)	5.22	
H- G	-1177 / 0	0.0	0.0	0.24 (1)	5.88	
M- B	-1336 / 0	0.0	0.0	0.17 (1)	7.00	
M- L	0 / 0	-18.5	-18.5	0.13 (4)	10.00	
L- K	0 / 554	-18.5	-18.5	0.21 (4)	10.00	
K- J	0 / 1191	-18.5	-18.5	0.32 (4)	10.00	
J- I	0 / 1191	-18.5	-18.5	0.32 (4)	10.00	
I- H	0 / 0	-18.5	-18.5	0.21 (4)	10.00	

WEBS

MEMB. FR-TO	MAX. FACTORED FORCE (LBS)	MAX CSI (LC)
L- C	-219 / 0	0.16 (1)
C- K	0 / 871	0.20 (1)
K- D	-471 / 0	0.34 (1)
D- I	-219 / 0	0.13 (1)
I- F	-645 / 0	0.47 (1)
I- G	0 / 1393	0.31 (1)
B- L	0 / 646	0.15 (1)

DESIGN CRITERIA

SPECIFIED LOADS:

TOP CH.	LL	=	23.3	PSF
	DL	=	6.0	PSF
BOT CH.	LL	=	0.0	PSF
	DL	=	7.4	PSF
TOTAL LOAD		=	36.7	PSF

SPACING = 24.0 IN. C/C

LOADING IN FLAT SECTION BASED ON A SLOPE OF 2.00/12 MINIMUM

THIS TRUSS IS DESIGNED FOR RESIDENTIAL OR SMALL BUILDING REQUIREMENTS OF PART 9, NBCC 2010, NBCC 2015

THIS DESIGN COMPLIES WITH:
- PART 9 OF BCBC 2018 , OBC 2012
- CSA 086-09, CSA 086-14
- TPIC 2011, TPIC 2014

(55 % OF 27.2 P.S.F. G.S.L. PLUS 8.4 P.S.F. RAIN LOAD) EQUALS 23.3 P.S.F. SPECIFIED ROOF LIVE LOAD

ALLOWABLE DEFL.(LL)= L/360 (0.79")
CALCULATED VERT. DEFL.(LL) = L/ 999 (0.04")
ALLOWABLE DEFL.(TL)= L/360 (0.79")
CALCULATED VERT. DEFL.(TL) = L/ 999 (0.10")

CSI: TC=0.63/1.00 (F-G:1) , BC=0.32/1.00 (I-K:4) , WB=0.47/1.00 (F-I:1) , SSI=0.28/1.00 (F-G:1)

DOL LUMBER=1.00 NAIL=1.00 LS BEND=1.10 COMP=1.10 SHEAR=1.10 TENS= 1.10

COMPANION LIVE LOAD FACTOR = 1.00

TRUSS PLATE MANUFACTURER IS NOT RESPONSIBLE FOR QUALITY CONTROL IN THE TRUSS MANUFACTURING PLANT .

NAIL VALUES

PLATE	GRIP(DRY) (PSI) MAX	MIN	SHEAR (PLI) MAX	MIN	SECTION (PLI) MAX	MIN
MT20	618	354	1667	788	1987	1656

PLATE PLACEMENT TOL. = 0.250 Inches

PLATE ROTATION TOL. = 5.0 Deg.

JSI GRIP= 0.89 (G) (INPUT = 0.90)
JSI METAL= 0.36 (B) (INPUT = 1.00)

JOB NAME	TRUSS NAME	QUANTITY	PLY	JOB DESC.		DRWG NO.
310386	H3	4	1	TRUSS DESC.	JT-39002	E-19072248

Alpa Roof Truss, Maple

Version 8.300 S May 10 2019 MiTek Industries, Inc. Wed Jul 10 13:36:41 2019 Page 1
ID:MF8lirlaTok7DlbpT4B71Xys4PG-6E7G8s3wrc70Fl?WAlMtKlsJrBaH79OsO_K1DUyzTDK
Scale = 1:51.4

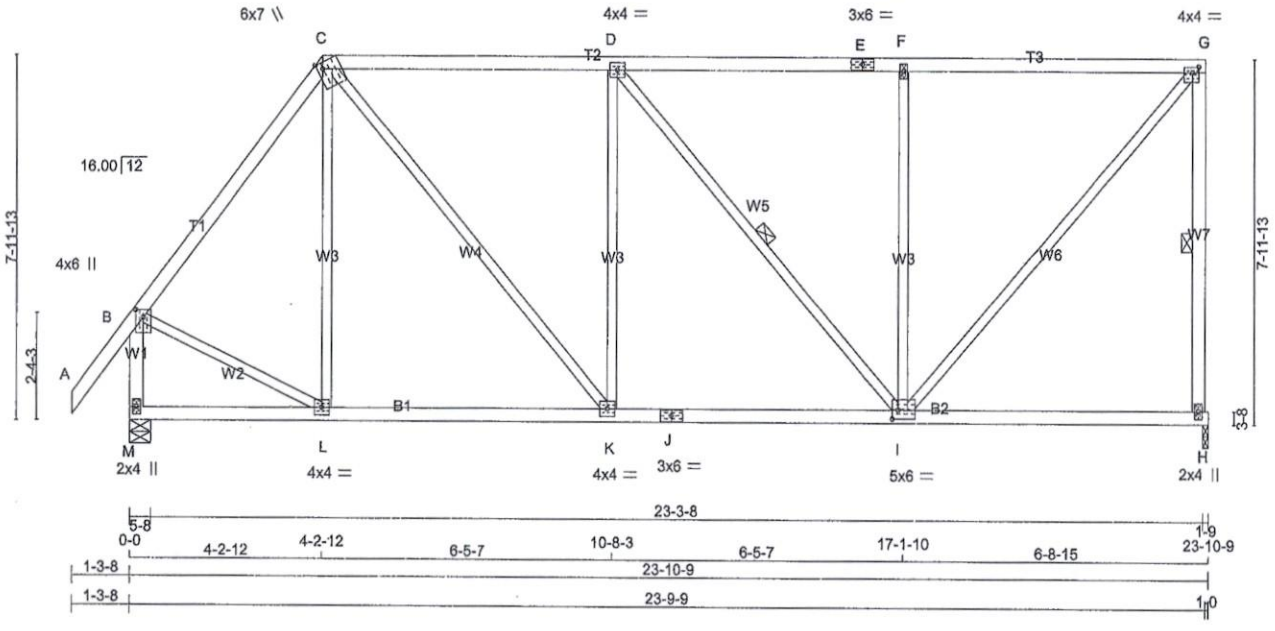

TOTAL WEIGHT = 4 X 116 = 466 lb
[M]

LUMBER
N. L. G. A. RULES

CHORDS	SIZE		LUMBER	DESCR.
A - C	2x4	DRY	No.2	SPF
C - E	2x4	DRY	No.2	SPF
E - G	2x4	DRY	No.2	SPF
H - G	2x4	DRY	No.2	SPF
M - B	2x4	DRY	No.2	SPF
M - J	2x4	DRY	No.2	SPF
J - H	2x4	DRY	No.2	SPF
ALL WEBS EXCEPT	2x3	DRY	No.2	SPF

DRY: SEASONED LUMBER.

PLATES (table is in inches)

JT	TYPE	PLATES	W	LEN	Y	X
B	TMVW+p	MT20	4.0	6.0	2.00	2.00
C	TTWW+m	MT20	6.0	7.0	Edge	1.50
D	TMWW-t	MT20	4.0	4.0		
E	TS-t	MT20	3.0	6.0		
F	TMW+w	MT20	2.0	4.0		
G	TMVW-t	MT20	4.0	4.0	1.50	1.75
H	BMV1+p	MT20	2.0	4.0		
I	BMWWW-t	MT20	5.0	6.0	2.25	1.50
J	BS-t	MT20	3.0	6.0		
K	BMWW-t	MT20	4.0	4.0		
L	BMWW-t	MT20	4.0	4.0		
M	BMV1+p	MT20	2.0	4.0		

Edge - INDICATES REFERENCE CORNER OF PLATE TOUCHES EDGE OF CHORD.

NOTES- (1)

NOTE: Lateral brace(s) shown shall be 2x4 SPF #2

LICENSED PROFESSIONAL ENGINEER
07/10/2019
R. TURENNE
100157040
PROVINCE OF ONTARIO

DIMENSIONS, SUPPORTS AND LOADINGS SPECIFIED BY FABRICATOR TO BE VERIFIED BY BUILDING DESIGNER

BEARINGS

JT	FACTORED GROSS REACTION VERT	HORZ	MAXIMUM FACTORED GROSS REACTION DOWN	HORZ	UPLIFT	INPUT BRG IN-SX	REQRD BRG IN-SX
H	1230	0	1230	0	0	1-9	1-8
M	1349	0	1349	0	0	5-8	2-0

UNFACTORED REACTIONS

JT	1ST LCASE COMBINED	SNOW	LIVE	PERM.LIVE	WIND	DEAD	SOIL
		MAX./MIN. COMPONENT REACTIONS					
H	873	554 / 0	0 / 0	0 / 0	0 / 0	319 / 0	0 / 0
M	956	620 / 0	0 / 0	0 / 0	0 / 0	336 / 0	0 / 0

BEARING MATERIAL TO BE SPF NO.2 OR BETTER AT JOINT(S) H, M

BRACING
TOP CHORD TO BE SHEATHED OR MAX. PURLIN SPACING = 5.48 FT.
MAX. UNBRACED BOTTOM CHORD LENGTH = 10.00 FT OR RIGID CEILING DIRECTLY APPLIED.

ALL PITCH BREAKS AND PERIMETER CORNER JOINTS MUST BE LATERALLY RESTRAINED.

1 LATERAL BRACE(S) AT 1/ 2 LENGTH OF G-H, D-I.

END VERTICAL(S) MUST BE SHEATHED OR HAVE BRACES AS INDICATED IN THE MAX. UNBRACED LENGTH COLUMN OF THE TABLE BELOW

LOADING
TOTAL LOAD CASES: (4)

CHORDS

MEMB. FR-TO	MAX. FACTORED FORCE (LBS)	FACTORED VERT. LOAD LC1 (PLF) FROM	TO	MAX CSI (LC)	MAX. UNBRAC LENGTH
A- B	0 / 48	-84.9	-84.9	0.12 (1)	10.00
B- C	-954 / 0	-84.9	-84.9	0.30 (1)	5.98
C- D	-993 / 0	-84.9	-84.9	0.53 (1)	5.48
D- E	-824 / 0	-84.9	-84.9	0.54 (1)	5.83
E- F	-824 / 0	-84.9	-84.9	0.54 (1)	5.83
F- G	-824 / 0	-84.9	-84.9	0.54 (1)	5.83
H- G	-1180 / 0	0.0	0.0	0.34 (1)	5.88
M- B	-1322 / 0	0.0	0.0	0.17 (1)	7.03
M- L	0 / 0	-18.5	-18.5	0.13 (4)	10.00
L- K	0 / 567	-18.5	-18.5	0.19 (4)	10.00
K- J	0 / 993	-18.5	-18.5	0.28 (4)	10.00
J- I	0 / 993	-18.5	-18.5	0.28 (4)	10.00
I- H	0 / 0	-18.5	-18.5	0.19 (4)	10.00

WEBS

MEMB. FR-TO	MAX. FACTORED FORCE (LBS)	MAX CSI (LC)
L- C	-146 / 28	0.18 (1)
C- K	0 / 660	0.15 (1)
K- D	-389 / 0	0.47 (1)
D- I	-264 / 0	0.19 (1)
I- F	-613 / 0	0.74 (1)
I- G	0 / 1258	0.28 (1)
B- L	0 / 625	0.14 (1)

DESIGN CRITERIA

SPECIFIED LOADS:

TOP CH.	LL	=	23.3	PSF
	DL	=	6.0	PSF
BOT CH.	LL	=	0.0	PSF
	DL	=	7.4	PSF
TOTAL LOAD		=	36.7	PSF

SPACING = 24.0 IN. C/C

LOADING IN FLAT SECTION BASED ON A SLOPE OF 2.00/12 MINIMUM

THIS TRUSS IS DESIGNED FOR RESIDENTIAL OR SMALL BUILDING REQUIREMENTS OF PART 9, NBCC 2010, NBCC 2015

THIS DESIGN COMPLIES WITH:
- PART 9 OF BCBC 2018 , OBC 2012
- CSA 086-09, CSA 086-14
- TPIC 2011, TPIC 2014

(55 % OF 27.2 P.S.F. G.S.L. PLUS 8.4 P.S.F. RAIN LOAD) EQUALS 23.3 P.S.F. SPECIFIED ROOF LIVE LOAD

ALLOWABLE DEFL.(LL)= L/360 (0.79")
CALCULATED VERT. DEFL.(LL) = L/ 999 (0.04")
ALLOWABLE DEFL.(TL)= L/360 (0.79")
CALCULATED VERT. DEFL.(TL) = L/ 999 (0.08")

CSI: TC=0.54/1.00 (F-G:1) , BC=0.28/1.00 (I-K:4) , WB=0.74/1.00 (F-I:1) , SSI=0.26/1.00 (F-G:1)

DOL LUMBER=1.00 NAIL=1.00 LS BEND=1.10 COMP=1.10 SHEAR=1.10 TENS= 1.10

COMPANION LIVE LOAD FACTOR = 1.00

TRUSS PLATE MANUFACTURER IS NOT RESPONSIBLE FOR QUALITY CONTROL IN THE TRUSS MANUFACTURING PLANT .

NAIL VALUES

PLATE	GRIP(DRY) (PSI) MAX	MIN	SHEAR (PLI) MAX	MIN	SECTION (PLI) MAX	MIN
MT20	618	354	1667	788	1987	1656

PLATE PLACEMENT TOL. = 0.250 Inches

PLATE ROTATION TOL. = 5.0 Deg.

JSI GRIP= 0.88 (I) (INPUT = 0.90)
JSI METAL= 0.37 (B) (INPUT = 1.00)

JOB NAME	TRUSS NAME	QUANTITY	PLY	JOB DESC.	DRWG NO.
310386	H4		1	TRUSS DESC. JT-39002	E-19072249

Alpa Roof Truss, Maple

Version 8.300 S May 10 2019 MiTek Industries, Inc. Wed Jul 10 13:36:42 2019 Page 1
ID:MF8IirlaTok7DlbpT4B71Xys4PG-aRhfLC4YcwFtsvaik?t6twOVNbx_si30ce3blwyzTDJ
Scale = 1:52.7

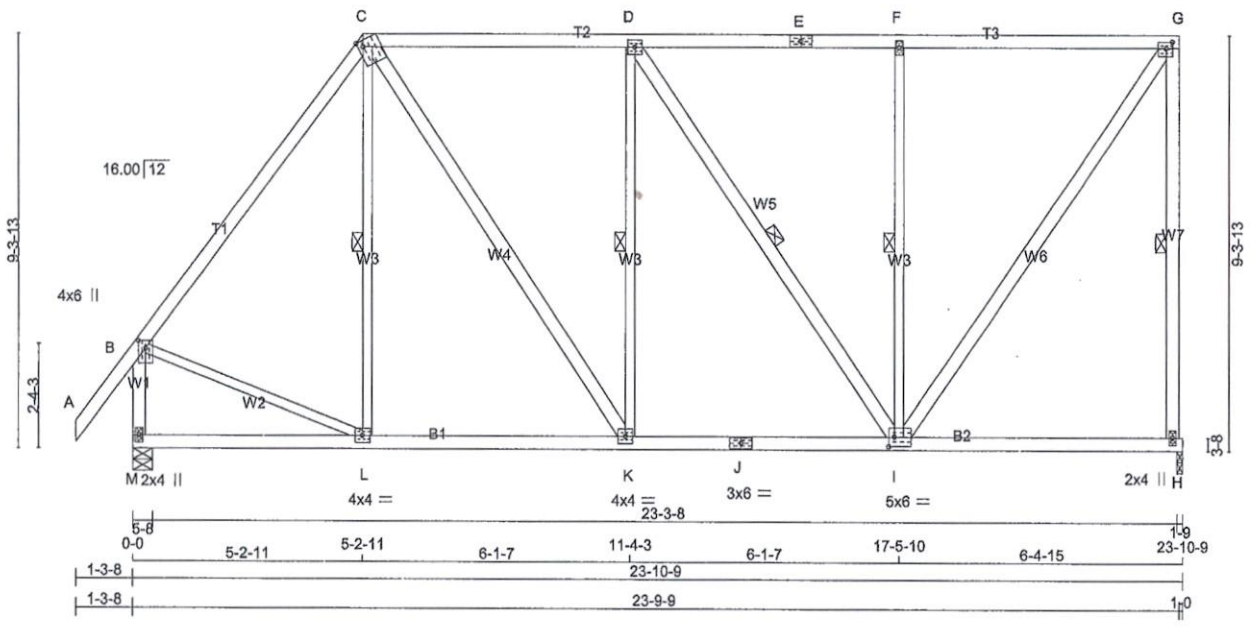

TOTAL WEIGHT = 4 X 135 = 541 lb
[M]

LUMBER
N. L. G. A. RULES

CHORDS	SIZE		LUMBER	DESCR.
A - C	2x4	DRY	No.2	SPF
C - E	2x4	DRY	No.2	SPF
E - G	2x4	DRY	No.2	SPF
H - G	2x4	DRY	No.2	SPF
M - B	2x4	DRY	No.2	SPF
M - J	2x4	DRY	No.2	SPF
J - H	2x4	DRY	No.2	SPF
ALL WEBS	2x3	DRY	No.2	SPF
EXCEPT				
C - K	2x4	DRY	No.2	SPF
D - I	2x4	DRY	No.2	SPF
I - G	2x4	DRY	No.2	SPF

DRY: SEASONED LUMBER.

PLATES (table is in inches)

JT	TYPE	PLATES	W	LEN	Y	X
B	TMVW+p	MT20	4.0	6.0	2.00	2.00
C	TTWW+m	MT20	6.0	7.0	Edge	1.50
D	TMWW-t	MT20	4.0	4.0		
E	TS-t	MT20	3.0	6.0		
F	TMW+w	MT20	2.0	4.0		
G	TMVW-t	MT20	4.0	4.0	1.75	1.75
H	BMV1+p	MT20	2.0	4.0		
I	BMWWW-t	MT20	5.0	6.0	2.50	1.50
J	BS-t	MT20	3.0	6.0		
K	BMWW-t	MT20	4.0	4.0		
L	BMWW-t	MT20	4.0	4.0		
M	BMV1+p	MT20	2.0	4.0		

Edge - INDICATES REFERENCE CORNER OF PLATE TOUCHES EDGE OF CHORD.

NOTES- (1)

NOTE: Lateral brace(s) shown shall be 2x4 SPF #2

LICENSED PROFESSIONAL ENGINEER
07/10/2019
R. TURENNE
100157040
PROVINCE OF ONTARIO

DIMENSIONS, SUPPORTS AND LOADINGS SPECIFIED BY FABRICATOR TO BE VERIFIED BY BUILDING DESIGNER

BEARINGS

JT	FACTORED GROSS REACTION VERT	HORZ	MAXIMUM FACTORED GROSS REACTION DOWN	HORZ	UPLIFT	INPUT BRG IN-SX	REQRD BRG IN-SX
H	1230	0	1230	0	0	1-9	1-8
M	1349	0	1349	0	0	5-8	2-0

UNFACTORED REACTIONS

JT	1ST LCASE COMBINED	MAX./MIN. COMPONENT REACTIONS SNOW	LIVE	PERM.LIVE	WIND	DEAD	SOIL
H	873	554 / 0	0 / 0	0 / 0	0 / 0	319 / 0	0 / 0
M	956	620 / 0	0 / 0	0 / 0	0 / 0	336 / 0	0 / 0

BEARING MATERIAL TO BE SPF NO.2 OR BETTER AT JOINT(S) H, M

BRACING
TOP CHORD TO BE SHEATHED OR MAX. PURLIN SPACING = 5.74 FT.
MAX. UNBRACED BOTTOM CHORD LENGTH = 10.00 FT OR RIGID CEILING DIRECTLY APPLIED.

ALL PITCH BREAKS AND PERIMETER CORNER JOINTS MUST BE LATERALLY RESTRAINED.

1 LATERAL BRACE(S) AT 1/ 2 LENGTH OF G-H, C-L, D-K, D-I, F-I.

END VERTICAL(S) MUST BE SHEATHED OR HAVE BRACES AS INDICATED IN THE MAX. UNBRACED LENGTH COLUMN OF THE TABLE BELOW

LOADING
TOTAL LOAD CASES: (4)

CHORDS

MEMB. FR-TO	MAX. FACTORED FORCE (LBS)	FACTORED VERT. LOAD LC1 (PLF) FROM	TO	MAX CSI (LC)	MAX. UNBRAC LENGTH
A- B	0 / 48	-84.9	-84.9	0.12 (1)	10.00
B- C	-949 / 0	-84.9	-84.9	0.49 (1)	5.74
C- D	-848 / 0	-84.9	-84.9	0.46 (1)	5.93
D- E	-677 / 0	-84.9	-84.9	0.47 (1)	6.25
E- F	-677 / 0	-84.9	-84.9	0.47 (1)	6.25
F- G	-677 / 0	-84.9	-84.9	0.48 (1)	6.25
H- G	-1182 / 0	0.0	0.0	0.48 (1)	5.87
M- B	-1311 / 0	0.0	0.0	0.17 (1)	7.06
M- L	0 / 0	-18.5	-18.5	0.14 (4)	10.00
L- K	0 / 566	-18.5	-18.5	0.19 (4)	10.00
K- J	0 / 849	-18.5	-18.5	0.25 (4)	10.00
J- I	0 / 849	-18.5	-18.5	0.25 (4)	10.00
I- H	0 / 0	-18.5	-18.5	0.18 (4)	10.00

WEBS

MEMB. FR-TO	MAX. FACTORED FORCE (LBS)	MAX CSI (LC)
L- C	-91 / 55	0.05 (1)
C- K	0 / 502	0.08 (1)
K- D	-308 / 0	0.18 (1)
D- I	-307 / 0	0.20 (1)
I- F	-582 / 0	0.33 (1)
I- G	0 / 1179	0.19 (1)
B- L	0 / 604	0.14 (1)

DESIGN CRITERIA

SPECIFIED LOADS:

TOP CH.	LL	=	23.3	PSF
	DL	=	6.0	PSF
BOT CH.	LL	=	0.0	PSF
	DL	=	7.4	PSF
TOTAL LOAD		=	36.7	PSF

SPACING = 24.0 IN. C/C

LOADING IN FLAT SECTION BASED ON A SLOPE OF 2.00/12 MINIMUM

THIS TRUSS IS DESIGNED FOR RESIDENTIAL OR SMALL BUILDING REQUIREMENTS OF PART 9, NBCC 2010, NBCC 2015

THIS DESIGN COMPLIES WITH:
- PART 9 OF BCBC 2018 , OBC 2012
- CSA 086-09, CSA 086-14
- TPIC 2011, TPIC 2014

(55 % OF 27.2 P.S.F. G.S.L. PLUS 8.4 P.S.F. RAIN LOAD) EQUALS 23.3 P.S.F. SPECIFIED ROOF LIVE LOAD

ALLOWABLE DEFL.(LL)= L/360 (0.79")
CALCULATED VERT. DEFL.(LL) = L/ 999 (0.03")
ALLOWABLE DEFL.(TL)= L/360 (0.79")
CALCULATFD VERT. DEFL.(TL) = L/ 999 (0.06")

CSI: TC=0.49/1.00 (B-C:1) , BC=0.25/1.00 (I-K:4) , WB=0.33/1.00 (F-I:1) , SSI=0.25/1.00 (F-G:1)

DOL LUMBER=1.00 NAIL=1.00 LS BEND=1.10 COMP=1.10 SHEAR=1.10 TENS= 1.10

COMPANION LIVE LOAD FACTOR = 1.00

TRUSS PLATE MANUFACTURER IS NOT RESPONSIBLE FOR QUALITY CONTROL IN THE TRUSS MANUFACTURING PLANT .

NAIL VALUES

PLATE	GRIP(DRY) (PSI) MAX	MIN	SHEAR (PLI) MAX	MIN	SECTION (PLI) MAX	MIN
MT20	618	354	1667	788	1987	1656

PLATE PLACEMENT TOL. = 0.250 Inches

PLATE ROTATION TOL. = 5.0 Deg.

JSI GRIP= 0.90 (I) (INPUT = 0.90)
JSI METAL= 0.38 (B) (INPUT = 1.00)

JOB NAME	TRUSS NAME	QUANTITY	PLY	JOB DESC.	DRWG NO.
310386	H5	4	1	TRUSS DESC. JT-39002	E-19072250

Alpa Roof Truss, Maple

Version 8.300 S May 10 2019 MiTek Industries, Inc. Wed Jul 10 13:37:13 2019 Page 1
ID:MF8iIriaTok7DlbpT4B71Xys4PG-AO2NspS_IR9T4gSg20xNdSBmQ4TTddsalz4kKdyzTCq
Scale = 1:60.1

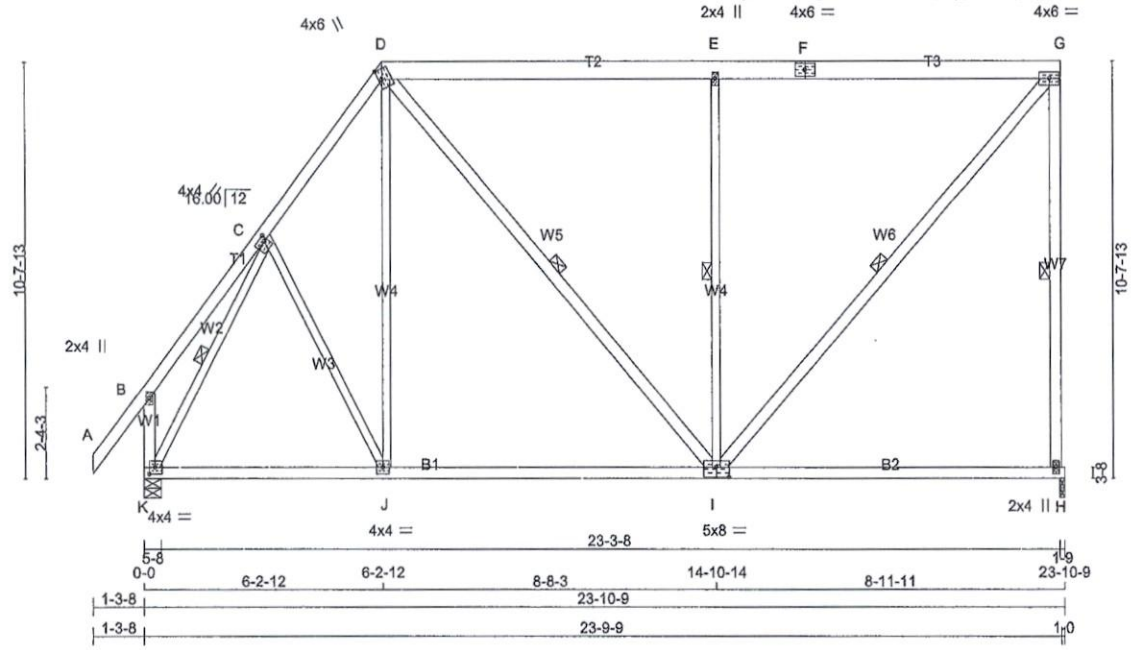

TOTAL WEIGHT = 4 X 143 = 574 lb

[M]

LUMBER

N. L. G. A. RULES

CHORDS	SIZE		LUMBER	DESCR.
A - D	2x4	DRY	No.2	SPF
D - F	2x6	DRY	No.2	SPF
F - G	2x6	DRY	No.2	SPF
H - G	2x4	DRY	No.2	SPF
K - B	2x4	DRY	No.2	SPF
K - I	2x4	DRY	No.2	SPF
I - H	2x4	DRY	No.2	SPF
ALL WEBS	2x3	DRY	No.2	SPF
EXCEPT				
D - I	2x4	DRY	No.2	SPF
I - G	2x4	DRY	No.2	SPF

DRY: SEASONED LUMBER.

PLATES (table is in inches)

JT	TYPE	PLATES	W	LEN	Y	X
B	TMV+p	MT20	2.0	4.0		
C	TMWW-t	MT20	4.0	4.0	1.50	1.00
D	TTWW+m	MT20	4.0	6.0	3.00	1.00
E	TMW+w	MT20	2.0	4.0		
F	TS-t	MT20	4.0	6.0		
G	TMVW-t	MT20	4.0	6.0		
H	BMV1+p	MT20	2.0	4.0		
I	BSWWW-I	MT20	5.0	8.0	3.00	4.00
J	BMWW-t	MT20	4.0	4.0		
K	BMVW1-t	MT20	4.0	4.0	2.00	1.75

NOTES- (1)

NOTE: Lateral brace(s) shown shall be 2x4 SPF #2

LICENSED PROFESSIONAL ENGINEER
07/10/2019
R. TURENNE
100157040
PROVINCE OF ONTARIO

DIMENSIONS, SUPPORTS AND LOADINGS SPECIFIED BY FABRICATOR TO BE VERIFIED BY BUILDING DESIGNER

BEARINGS

JT	FACTORED GROSS REACTION VERT	HORZ	MAXIMUM FACTORED GROSS REACTION DOWN	HORZ	UPLIFT	INPUT BRG IN-SX	REQRD BRG IN-SX
H	1230	0	1230	0	0	1-9	1-8
K	1349	0	1349	0	0	5-8	1-8

UNFACTORED REACTIONS

JT	1ST LCASE COMBINED	MAX./MIN. COMPONENT REACTIONS SNOW	LIVE	PERM.LIVE	WIND	DEAD	SOIL
H	873	554 / 0	0 / 0	0 / 0	0 / 0	319 / 0	0 / 0
K	956	620 / 0	0 / 0	0 / 0	0 / 0	336 / 0	0 / 0

BEARING MATERIAL TO BE SPF NO.2 OR BETTER AT JOINT(S) H, K

BRACING

TOP CHORD TO BE SHEATHED OR MAX. PURLIN SPACING = 6.18 FT.
MAX. UNBRACED BOTTOM CHORD LENGTH = 10.00 FT OR RIGID CEILING DIRECTLY APPLIED.

ALL PITCH BREAKS AND PERIMETER CORNER JOINTS MUST BE LATERALLY RESTRAINED.

1 LATERAL BRACE(S) AT 1/ 2 LENGTH OF G-H, D-I, E-I, G-I, C-K.

END VERTICAL(S) MUST BE SHEATHED OR HAVE BRACES AS INDICATED IN THE MAX. UNBRACED LENGTH COLUMN OF THE TABLE BELOW

LOADING

TOTAL LOAD CASES: (4)

CHORDS

MEMB. FR-TO	MAX. FACTORED FORCE (LBS)	FACTORED VERT. LOAD LC1 (PLF) FROM	TO	MAX CSI (LC)	MAX. UNBRAC LENGTH
A- B	0 / 48	-84.9	-84.9	0.12 (1)	10.00
B- C	0 / 23	-84.9	-84.9	0.13 (1)	10.00
C- D	-962 / 0	-84.9	-84.9	0.14 (1)	6.18
D- E	-743 / 0	-84.9	-84.9	0.55 (1)	6.25
E- F	-743 / 0	-84.9	-84.9	0.55 (1)	6.25
F- G	-743 / 0	-84.9	-84.9	0.55 (1)	6.25
H- G	-1148 / 0	0.0	0.0	0.63 (1)	5.94
K- B	-219 / 0	0.0	0.0	0.03 (1)	7.81
K- J	0 / 553	-18.5	-18.5	0.36 (4)	10.00
J- I	0 / 564	-18.5	-18.5	0.37 (4)	10.00
I- H	0 / 0	-18.5	-18.5	0.43 (4)	10.00

WEBS

MEMB. FR-TO	MAX. FACTORED FORCE (LBS)	MAX CSI (LC)
C- J	0 / 41	0.01 (4)
J- D	0 / 160	0.06 (4)
D- I	0 / 277	0.04 (1)
I- E	-924 / 0	0.71 (1)
I- G	0 / 1136	0.18 (1)
K- C	-1224 / 0	0.38 (1)

DESIGN CRITERIA

SPECIFIED LOADS:

TOP	CH.	LL	=	23.3	PSF
		DL	=	6.0	PSF
BOT	CH.	LL	=	0.0	PSF
		DL	=	7.4	PSF
TOTAL	LOAD		=	36.7	PSF

SPACING = 24.0 IN. C/C

LOADING IN FLAT SECTION BASED ON A SLOPE OF 2.00/12 MINIMUM

THIS TRUSS IS DESIGNED FOR RESIDENTIAL OR SMALL BUILDING REQUIREMENTS OF PART 9, NBCC 2010, NBCC 2015

THIS DESIGN COMPLIES WITH:
- PART 9 OF BCBC 2018 , OBC 2012
- CSA 086-09, CSA 086-14
- TPIC 2011, TPIC 2014

(55 % OF 27.2 P.S.F. G.S.L. PLUS 8.4 P.S.F. RAIN LOAD) EQUALS 23.3 P.S.F. SPECIFIED ROOF LIVE LOAD

ALLOWABLE DEFL.(LL)= L/360 (0.79")
CALCULATED VERT. DEFL.(LL) = L/ 999 (0.03")
ALLOWABLE DEFL.(TL)= L/360 (0.79")
CALCULATED VERT. DEFL.(TL) = L/ 930 (0.31")

CSI: TC=0.63/1.00 (G-H:1) , BC=0.43/1.00 (H-I:4) , WB=0.71/1.00 (E-I:1) , SSI=0.28/1.00 (E-G:1)

DOL LUMBER=1.00 NAIL=1.00 LS BEND=1.10 COMP=1.10 SHEAR=1.10 TENS= 1.10

COMPANION LIVE LOAD FACTOR = 1.00

TRUSS PLATE MANUFACTURER IS NOT RESPONSIBLE FOR QUALITY CONTROL IN THE TRUSS MANUFACTURING PLANT .

NAIL VALUES

PLATE	GRIP(DRY) (PSI) MAX	MIN	SHEAR (PLI) MAX	MIN	SECTION (PLI) MAX	MIN
MT20	618	354	1667	788	1987	1656

PLATE PLACEMENT TOL. = 0.250 Inches

PLATE ROTATION TOL. = 5.0 Deg.

JSI GRIP= 0.87 (K) (INPUT = 0.90)
JSI METAL= 0.45 (C) (INPUT = 1.00)

JOB NAME	TRUSS NAME	QUANTITY	PLY	JOB DESC.	DRWG NO.
310397	H6		1	TRUSS DESC. JT-39002	E-19072392

Alpa Roof Truss, Maple

Version 8.300 S May 10 2019 MiTek Industries, Inc. Thu Jul 11 13:23:41 2019 Page 1
ID:kx9I86OLlWqKxBYZIGBjHpysKNA-B7cAvJELCMLX9jT?v0R4SE_2p7Yo2PUNgmlgKpyz8JW

Scale = 1:67.2

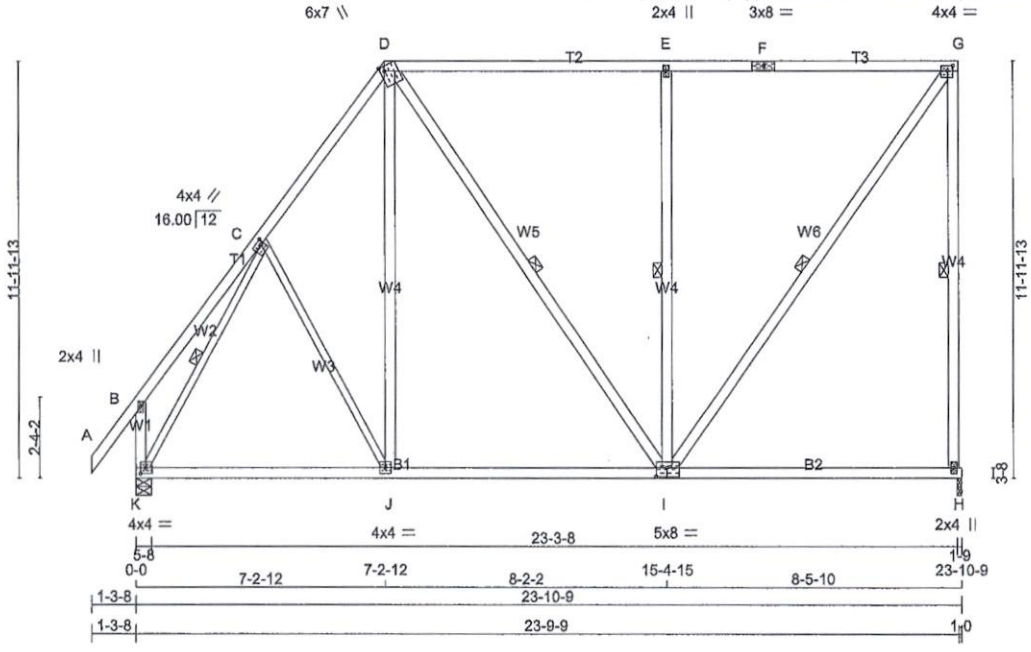

TOTAL WEIGHT = 13 X 148 = 1918 lb

[M][F]

LUMBER

N. L. G. A. RULES

CHORDS	SIZE	DRY	LUMBER	DESCR.
A - D	2x4	DRY	No.2	SPF
D - F	2x4	DRY	1650F 1.5E	SPF
F - G	2x4	DRY	1650F 1.5E	SPF
H - G	2x4	DRY	No.2	SPF
K - B	2x4	DRY	No.2	SPF
K - I	2x4	DRY	No.2	SPF
I - H	2x4	DRY	No.2	SPF
ALL WEBS	2x4	DRY	No.2	SPF
EXCEPT				
C - J	2x3	DRY	No.2	SPF
K - C	2x3	DRY	No.2	SPF

DRY: SEASONED LUMBER.

PLATES (table Is In Inches)

JT	TYPE	PLATES	W	LEN	Y	X
B	TMV+p	MT20	2.0	4.0		
C	TMWW-t	MT20	4.0	4.0	1.50	1.00
D	TTWW+m	MT20	6.0	7.0	Edge	1.50
E	TMW+w	MT20	2.0	4.0		
F	TS-t	MT20	3.0	8.0		
G	TMVW-t	MT20	4.0	4.0	1.75	1.75
H	BMV1+p	MT20	2.0	4.0		
I	BSWWW-i	MT20	5.0	8.0	3.00	3.75
J	BMWW-t	MT20	4.0	4.0		
K	BMVW1-t	MT20	4.0	4.0	2.00	1.75

Edge - INDICATES REFERENCE CORNER OF PLATE TOUCHES EDGE OF CHORD.

NOTES- (1)

NOTE: Lateral brace(s) shown shall be 2x4 SPF #2

LICENSED PROFESSIONAL ENGINEER
07/11/2019
R. TURENNE
100157040
PROVINCE OF ONTARIO

DIMENSIONS, SUPPORTS AND LOADINGS SPECIFIED BY FABRICATOR TO BE VERIFIED BY BUILDING DESIGNER

BEARINGS

JT	FACTORED GROSS REACTION VERT	HORZ	MAXIMUM FACTORED GROSS REACTION DOWN	HORZ	UPLIFT	INPUT BRG IN-SX	REQRD BRG IN-SX
H	1311	0	1311	0	0	1-9	1-8
K	1393	0	1393	0	0	5-8	1-8

UNFACTORED REACTIONS

JT	1ST LCASE COMBINED	MAX./MIN. COMPONENT REACTIONS SNOW	LIVE	PERM.LIVE	WIND	DEAD	SOIL
H	938	554 / 0	0 / 0	0 / 0	0 / 0	384 / 0	0 / 0
K	990	620 / 0	0 / 0	0 / 0	0 / 0	370 / 0	0 / 0

BEARING MATERIAL TO BE SPF NO.2 OR BETTER AT JOINT(S) H, K

BRACING

FOR SECTION D-G, MAX. PURLIN SPACING = 2.00 FT.
FOR OTHER SECTIONS, TOP CHORD TO BE SHEATHED OR MAX. PURLIN SPACING = 6.13 FT.
MAX. UNBRACED BOTTOM CHORD LENGTH = 10.00 FT OR RIGID CEILING DIRECTLY APPLIED.

ALL PITCH BREAKS AND PERIMETER CORNER JOINTS MUST BE LATERALLY RESTRAINED.

1 LATERAL BRACE(S) AT 1/ 2 LENGTH OF G-H, D-I, E-I, G-I, C-K.

END VERTICAL(S) MUST BE SHEATHED OR HAVE BRACES AS INDICATED IN THE MAX. UNBRACED LENGTH COLUMN OF THE TABLE BELOW

LOADING

TOTAL LOAD CASES: (4)

CHORDS

MEMB. FR-TO	MAX. FACTORED FORCE (LBS)	FACTORED VERT. LOAD (PLF) FROM	TO	LC1 MAX CSI (LC)	MAX. UNBRAC LENGTH
A- B	0 / 48	-84.9	-84.9	0.12 (1)	10.00
B- C	0 / 29	-84.9	-84.9	0.18 (1)	10.00
C- D	-981 / 0	-84.9	-84.9	0.15 (1)	6.13
D- E	-673 / 0	-92.4	-92.4	0.71 (1)	2.00
E- F	-674 / 0	-92.4	-92.4	0.72 (1)	2.00
F- G	-674 / 0	-92.4	-92.4	0.72 (1)	2.00
H- G	-1233 / 0	0.0	0.0	0.97 (1)	5.78
K- B	-234 / 0	0.0	0.0	0.03 (1)	7.81
K- J	0 / 588	-18.5	-18.5	0.37 (4)	10.00
J- I	0 / 571	-18.5	-18.5	0.38 (4)	10.00
I- H	0 / 0	-18.5	-18.5	0.38 (4)	10.00

WEBS

MEMB. FR-TO	MAX. FACTORED FORCE (LBS)	MAX CSI (LC)
C- J	-39 / 30	0.05 (1)
J- D	0 / 211	0.04 (4)
D- I	0 / 179	0.03 (1)
I- E	-950 / 0	0.75 (1)
I- G	0 / 1156	0.19 (1)
K- C	-1254 / 0	0.49 (1)

DESIGN CRITERIA

SPECIFIED LOADS:

TOP CH.	LL =	23.3	PSF
	DL =	6.0	PSF
BOT CH.	LL =	0.0	PSF
	DL =	7.4	PSF
TOTAL LOAD	=	36.7	PSF

SPACING = 24.0 IN. C/C

LOADING IN FLAT SECTION BASED ON PIGGYBACK TRUSS WITH SLOPES OF 6.00/12 AND -6.00/12 AND RESPECTIVE WALL HEIGHTS OF 0-0 AND 0-0 AND AN ADDITIONAL DEAD LOAD OF 3.0 P.S.F.

THIS TRUSS IS DESIGNED FOR RESIDENTIAL OR SMALL BUILDING REQUIREMENTS OF PART 9, NBCC 2010, NBCC 2015

THIS DESIGN COMPLIES WITH:
- PART 9 OF BCBC 2018 , OBC 2012
- CSA 086-09, CSA 086-14
- TPIC 2011, TPIC 2014

(55 % OF 27.2 P.S.F. G.S.L. PLUS 8.4 P.S.F. RAIN LOAD) EQUALS 23.3 P.S.F. SPECIFIED ROOF LIVE LOAD

ALLOWABLE DEFL.(LL)= L/360 (0.79")
CALCULATED VERT. DEFL.(LL) = L/ 999 (0.03")
ALLOWABLE DEFL.(TL)= L/360 (0.79")
CALCULATED VERT. DEFL.(TL) = L/ 999 (0.25")

CSI: TC=0.97/1.00 (G-H:1) , BC=0.38/1.00 (H-I:4) , WB=0.75/1.00 (E-I:1) , SSI=0.38/1.00 (E-G:1)

DOL LUMBER=1.00 NAIL=1.00 LS BEND=1.10 COMP=1.10 SHEAR=1.10 TENS= 1.10

COMPANION LIVE LOAD FACTOR = 1.00

TRUSS PLATE MANUFACTURER IS NOT RESPONSIBLE FOR QUALITY CONTROL IN THE TRUSS MANUFACTURING PLANT .

NAIL VALUES

PLATE	GRIP(DRY) (PSI) MAX	MIN	SHEAR (PLI) MAX	MIN	SECTION (PLI) MAX	MIN
MT20	618	354	1667	788	1987	1656

PLATE PLACEMENT TOL. = 0.250 Inches

PLATE ROTATION TOL. = 5.0 Deg.

JSI GRIP= 0.90 (I) (INPUT = 0.90)
JSI METAL= 0.47 (C) (INPUT = 1.00)

JOB NAME	TRUSS NAME	QUANTITY	PLY	JOB DESC.		DRWG NO.
310397	H7		1	TRUSS DESC.	JT-39002	E-19072393

Alpa Roof Truss, Maple

Version 8.300 S May 10 2019 MiTek Industries, Inc. Thu Jul 11 13:23:42 2019 Page 1
ID:kx9I86OLIWqKxBYZIGBjHpysKNA-fJAY6fFzzgTOns1BSkyJ?RWF0Xupn0aXvQUDsGyz8JV
Scale = 1:29.9

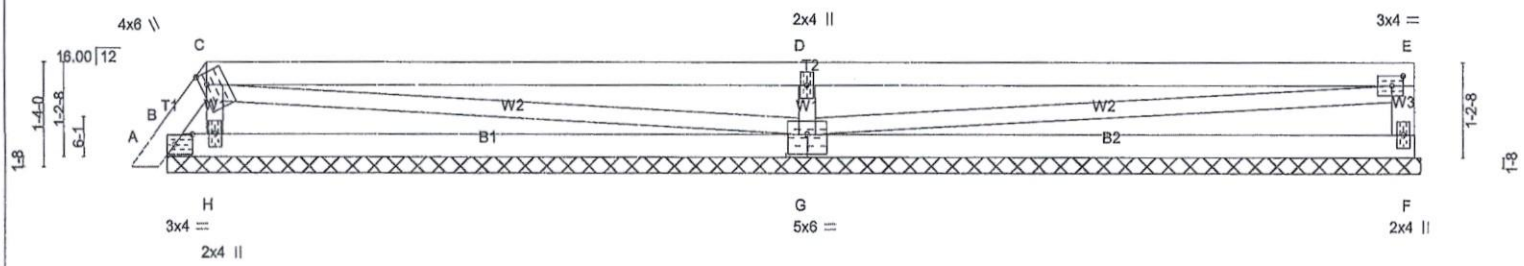

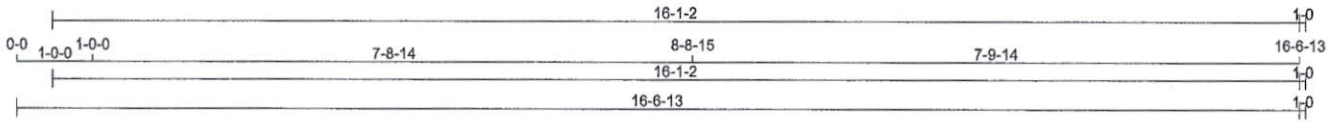

TOTAL WEIGHT = 4 X 52 = 207 lb (M)

LUMBER
N. L. G. A. RULES

CHORDS	SIZE		LUMBER	DESCR.
A - C	2x4	DRY	No.2	SPF
C - E	2x4	DRY	No.2	SPF
F - E	2x4	DRY	No.2	SPF
B - G	2x4	DRY	No.2	SPF
G - F	2x4	DRY	No.2	SPF
ALL WEBS	2x3	DRY	No.2	SPF

DRY: SEASONED LUMBER.

PLATES (table is in inches)

JT	TYPE	PLATES	W	LEN	Y	X
B	TMB1-I	MT20	3.0	4.0	1.50	2.75
C	TTWW+m	MT20	4.0	6.0	1.75	1.00
D	TMW+w	MT20	2.0	4.0		
E	TMVW-t	MT20	3.0	4.0	1.50	1.75
F	BMV1+p	MT20	2.0	4.0		
G	BSWWW1-I	MT20	5.0	6.0	3.00	3.00
H	BMW1+w	MT20	2.0	4.0		

NOTES- (1)

NOTE: Lateral brace(s) shown shall be 2x4 SPF #2

LICENSED PROFESSIONAL ENGINEER
07/11/2019
R. TURENNE
100157040
PROVINCE OF ONTARIO

DIMENSIONS, SUPPORTS AND LOADINGS SPECIFIED BY FABRICATOR TO BE VERIFIED BY BUILDING DESIGNER

BEARINGS

JT	FACTORED GROSS REACTION VERT	HORZ	MAXIMUM FACTORED GROSS REACTION DOWN	HORZ	UPLIFT	INPUT BRG IN-SX	REQRD BRG IN-SX
F	323	0	323	0	0	16-2-2 (16-1-2)	9-1
B	-76	0	0	0	-192	16-2-2 (16-1-2)	9-1
H	494	0	494	0	0	16-2-2 (16-1-2)	9-1
G	953	0	953	0	0	16-2-2 (16-1-2)	9-1

VALUE IN PARENTHESIS INDICATES EFFECTIVE BEARING LENGTH

PROVIDE ANCHORAGE AT BEARING JOINT B FOR 192 LBS FACTORED UPLIFT

UNFACTORED REACTIONS

JT	1ST LCASE COMBINED	MAX./MIN. COMPONENT REACTIONS SNOW	LIVE	PERM.LIVE	WIND	DEAD	SOIL
F	231	137 / 0	0 / 0	0 / 0	0 / 0	93 / 0	0 / 0
B	-74	64 / 0	0 / 0	0 / 0	0 / 0	0 / -137	0 / 0
H	373	111 / 0	0 / 0	0 / 0	0 / 0	261 / 0	0 / 0
G	672	454 / 0	0 / 0	0 / 0	0 / 0	218 / 0	0 / 0

BEARING MATERIAL TO BE SPF NO.2 OR BETTER AT JOINT(S) F, B, H, G

BRACING
TOP CHORD TO BE SHEATHED OR MAX. PURLIN SPACING = 6.25 FT.
MAX. UNBRACED BOTTOM CHORD LENGTH = 10.00 FT OR RIGID CEILING DIRECTLY APPLIED.

ALL PITCH BREAKS AND PERIMETER CORNER JOINTS MUST BE LATERALLY RESTRAINED.

LOADING
TOTAL LOAD CASES: (4)

CHORDS

MEMB. FR-TO	MAX. FACTORED FORCE (LBS)	FACTORED VERT. LOAD LC1 (PLF) FROM	TO	MAX CSI (LC)	MAX. UNBRAC LENGTH
A- B	0 / 11	-84.9	-84.9	0.01 (1)	10.00
B- C	-74 / 0	-84.9	-84.9	0.00 (1)	6.25
C- D	-2 / 0	-84.9	-84.9	0.87 (1)	10.00
D- E	-3 / 0	-84.9	-84.9	0.87 (1)	10.00
F- E	-250 / 0	0.0	0.0	0.03 (1)	7.81
B- H	0 / 39	-18.5	-18.5	0.29 (4)	10.00
H- G	0 / 14	-18.5	-18.5	0.29 (4)	10.00
G- F	0 / 0	-18.5	-18.5	0.33 (4)	10.00

WEBS

MEMB. FR-TO	MAX. FACTORED FORCE (LBS)	MAX CSI (LC)
H- C	-205 / 0	0.03 (1)
C- G	-11 / 0	0.01 (1)
G- D	-826 / 0	0.12 (1)
G- E	0 / 3	0.00 (1)

DESIGN CRITERIA

SPECIFIED LOADS:

TOP CH.	LL	=	23.3	PSF
	DL	=	6.0	PSF
BOT CH.	LL	=	0.0	PSF
	DL	=	7.4	PSF
TOTAL LOAD		=	36.7	PSF

SPACING = 24.0 IN. C/C

LOADING IN FLAT SECTION BASED ON A SLOPE OF 2.00/12 MINIMUM

THIS TRUSS IS DESIGNED FOR RESIDENTIAL OR SMALL BUILDING REQUIREMENTS OF PART 9, NBCC 2010, NBCC 2015

THIS DESIGN COMPLIES WITH:
- PART 9 OF BCBC 2018 , OBC 2012
- CSA 086-09, CSA 086-14
- TPIC 2011, TPIC 2014

(55 % OF 27.2 P.S.F. G.S.L. PLUS 8.4 P.S.F. RAIN LOAD) EQUALS 23.3 P.S.F. SPECIFIED ROOF LIVE LOAD

CSI: TC=0.87/1.00 (D-E:1) , BC=0.33/1.00 (F-G:4) , WB=0.12/1.00 (D-G:1) , SSI=0.32/1.00 (D-E:1)

DOL LUMBER=1.00 NAIL=1.00 LS BEND=1.10 COMP=1.10 SHEAR=1.10 TENS= 1.10

COMPANION LIVE LOAD FACTOR = 1.00

TRUSS PLATE MANUFACTURER IS NOT RESPONSIBLE FOR QUALITY CONTROL IN THE TRUSS MANUFACTURING PLANT .

NAIL VALUES

PLATE	GRIP(DRY) (PSI) MAX	MIN	SHEAR (PLI) MAX	MIN	SECTION (PLI) MAX	MIN
MT20	618	354	1667	788	1987	1656

PLATE PLACEMENT TOL. = 0.250 Inches

PLATE ROTATION TOL. = 5.0 Deg.

JSI GRIP= 0.78 (C) (INPUT = 0.90)
JSI METAL= 0.41 (G) (INPUT = 1.00)

JOB NAME	TRUSS NAME	QUANTITY	PLY	JOB DESC.	DRWG NO.
314233	J01T		1	TRUSS DESC. JT-39002	E-19112509

Alpa Roof Truss, Maple

Version 8.300 S Aug 9 2019 MiTek Industries, Inc. Fri Nov 8 12:09:33 2019 Page 1

ID:VRLqmclDiflZCj2mk6F92VyQuye-PedLg6Kg34EyrhyaL6P1sHTzGSwDvwrmGAw1?4yLGAm

Scale = 1:33.7

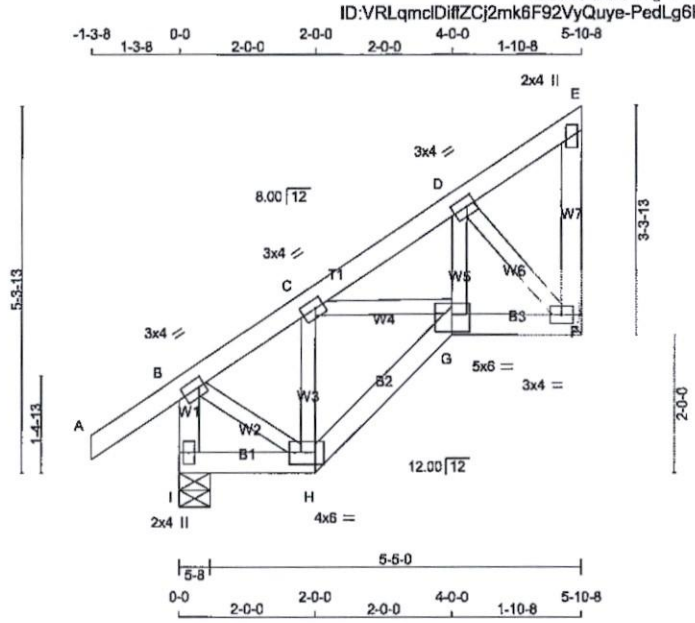

TOTAL WEIGHT = 7 X 30 = 209 lb [M]

LUMBER

N. L. G. A. RULES

CHORDS	SIZE		LUMBER	DESCR.
I - B	2x4	DRY	No.2	SPF
A - E	2x4	DRY	No.2	SPF
F - E	2x4	DRY	No.2	SPF
I - H	2x4	DRY	No.2	SPF
H - G	2x4	DRY	No.2	SPF
G - F	2x4	DRY	No.2	SPF
ALL WEBS	2x3	DRY	No.2	SPF

DRY: SEASONED LUMBER.

PLATES (table is in inches)

JT	TYPE	PLATES	W	LEN	Y	X
B	TMVW-t	MT20	3.0	4.0	1.50	1.00
C	TMWW-t	MT20	3.0	4.0	1.50	1.50
D	TMWW-t	MT20	3.0	4.0	1.50	1.50
E	TMV+p	MT20	2.0	4.0		
F	BMVW1-t	MT20	3.0	4.0		
G	BBWW-l	MT20	5.0	6.0	3.00	3.00
H	BBWW-l	MT20	4.0	6.0	2.00	4.50
I	BMV1+p	MT20	2.0	4.0		

NOTE: Lateral brace(s) shown shall be 2x4 SPF #2

LICENSED PROFESSIONAL ENGINEER
11/08/2019
R. TURENNE
100157040
PROVINCE OF ONTARIO

DIMENSIONS, SUPPORTS AND LOADINGS SPECIFIED BY FABRICATOR TO BE VERIFIED BY BUILDING DESIGNER

BEARINGS

JT	FACTORED GROSS REACTION VERT	HORZ	MAXIMUM FACTORED GROSS REACTION DOWN	HORZ	UPLIFT	INPUT BRG IN-SX	REQRD BRG IN-SX
I	434	0	434	0	0	5-8	1-8
F	290	0	290	0	0	MECHANICAL	

A SUITABLE HANGER/MECHANICAL CONNECTION IS REQUIRED AT JOINT F. MINIMUM BEARING LENGTH AT JOINT F = 1-8.

UNFACTORED REACTIONS

JT	1ST LCASE COMBINED	MAX./MIN. COMPONENT REACTIONS SNOW	LIVE	PERM.LIVE	WIND	DEAD	SOIL
I	305	208 / 0	0 / 0	0 / 0	0 / 0	97 / 0	0 / 0
F	206	129 / 0	0 / 0	0 / 0	0 / 0	77 / 0	0 / 0

BEARING MATERIAL TO BE SPF NO.2 OR BETTER AT JOINT(S) I

BRACING

TOP CHORD TO BE SHEATHED OR MAX. PURLIN SPACING = 6.25 FT.
MAX. UNBRACED BOTTOM CHORD LENGTH = 10.00 FT OR RIGID CEILING DIRECTLY APPLIED.

ALL PITCH BREAKS AND PERIMETER CORNER JOINTS MUST BE LATERALLY RESTRAINED.

LOADING

TOTAL LOAD CASES: (4)

CHORDS

MEMB. FR-TO	MAX. FACTORED FORCE (LBS)	FACTORED VERT. LOAD (PLF) FROM	TO	LC1 CSI (LC)	MAX	MAX. UNBRAC LENGTH
I- B	-415 / 0	0.0	0.0	0.04 (1)		7.81
A- B	0 / 32	-84.9	-84.9	0.11 (1)		10.00
B- C	-204 / 0	-84.9	-84.9	0.11 (1)		6.25
C- D	-264 / 0	-84.9	-84.9	0.05 (1)		6.25
D- E	-11 / 0	-84.9	-84.9	0.05 (1)		6.25
F- E	-56 / 0	0.0	0.0	0.01 (1)		7.81
I- H	0 / 0	-18.5	-18.5	0.02 (4)		10.00
H- G	0 / 204	-18.5	-18.5	0.05 (1)		10.00
G- F	0 / 215	-18.5	-18.5	0.05 (1)		10.00

WEBS

MEMB. FR-TO	MAX. FACTORED FORCE (LBS)	MAX CSI (LC)
B- H	0 / 173	0.04 (1)
H- C	-188 / 0	0.03 (1)
C- G	0 / 81	0.02 (1)
G- D	0 / 172	0.04 (1)
D- F	-308 / 0	0.05 (1)

DESIGN CRITERIA

SPECIFIED LOADS:

TOP CH.	LL =	23.3	PSF
	DL =	6.0	PSF
BOT CH.	LL =	0.0	PSF
	DL =	7.4	PSF
TOTAL LOAD	=	36.7	PSF

SPACING = 24.0 IN. C/C

THIS TRUSS IS DESIGNED FOR RESIDENTIAL OR SMALL BUILDING REQUIREMENTS OF PART 9, NBCC 2010, NBCC 2015

THIS DESIGN COMPLIES WITH:
- PART 9 OF BCBC 2018 , OBC 2012 , ABC 2019
- CSA 086-09, CSA 086-14
- TPIC 2011, TPIC 2014

DESIGN ASSUMPTIONS
-OVERHANG NOT TO BE ALTERED OR CUT OFF.

(55 % OF 27.2 P.S.F. G.S.L. PLUS 8.4 P.S.F. RAIN LOAD) EQUALS 23.3 P.S.F. SPECIFIED ROOF LIVE LOAD

ALLOWABLE DEFL.(LL)= L/360 (0.20")
CALCULATED VERT. DEFL.(LL) = L/ 999 (0.00")
ALLOWABLE DEFL.(TL)= L/360 (0.20")
CALCULATED VERT. DEFL.(TL) = L/ 999 (0.01")

CSI: TC=0.11/1.00 (A-B:1) , BC=0.05/1.00 (F-G:1) , WB=0.05/1.00 (D-F:1) , SSI=0.08/1.00 (A-B:1)

DOL LUMBER=1.00 NAIL=1.00 LS BEND=1.10 COMP=1.10 SHEAR=1.10 TENS= 1.10

COMPANION LIVE LOAD FACTOR = 1.00

TRUSS PLATE MANUFACTURER IS NOT RESPONSIBLE FOR QUALITY CONTROL IN THE TRUSS MANUFACTURING PLANT .

NAIL VALUES

PLATE	GRIP(DRY) (PSI) MAX	MIN	SHEAR (PLI) MAX	MIN	SECTION (PLI) MAX	MIN
MT20	618	354	1667	788	1987	1656

PLATE PLACEMENT TOL. = 0.250 inches

PLATE ROTATION TOL. = 5.0 Deg.

JSI GRIP= 0.56 (B) (INPUT = 0.90)
JSI METAL= 0.12 (B) (INPUT = 1.00)

May 27, 2019

Re: Expiration Date for Technical Bulletins Extended to 12/31/2019

Please be advised that the expiration date of the Technical Bulletins listed below has been extended until December 31, 2019.

T-SPECCP17	T-SPECH17	T-SPECDSHGUS17R
T-SPECHGUS17-R	T-SPECHHUS17-R	T-SPECHUS17
T-SPECLF17	T-SPECLT17	T-SPECLU17
T-SPECCLUL17	T-SPECLUS17	T-SPECSUR17
T-SPECTBE17	T-SPECTC17	T-SPECTHGB17
T-SPECTHGBHV17	T-SPECTHGQ17	T-SPECTHGW17
T-SPECLSULSSU17	T-SPECHTHGQ17	T-SPECSTHGQ17

Should you have any questions or concerns regarding the above, please contact me at your convenience.

Sincerely,

Brent Bunting, P.Eng.
Simpson Strong-Tie Canada, Ltd.

LICENSED PROFESSIONAL ENGINEER
5/28/2019
B. D. BUNTING
PROVINCE OF ONTARIO

LUS – Double Shear Joist Hangers

SIMPSON Strong-Tie®

All LUS hangers have double shear nailing. This patented innovation distributes the load through two points on each joist nail for greater strength. It also allows the use of fewer nails, faster installation and the use of common nails for all connections.

Material: 18 gauge

Finish: G90 galvanized

Design:

- Factored resistances are in accordance with CSA O86-14.
- Uplift resistances have been increased 15%. No further increase is permitted.
- Wood shear is not considered in the factored resistances given. The specifier must ensure that the joist and header capacities are capable of withstanding these loads.

Installation:

- Use all specified fasteners.
- Nails: 16d = 0.162" dia. x 3½" long common wire, 10d = 0.148" x 3" long common wire.
- Double shear nails must be driven at an angle through the joist or truss into the header to achieve the table loads.
- Not designed for welded or nailer applications.

Options:

- These hangers cannot be modified

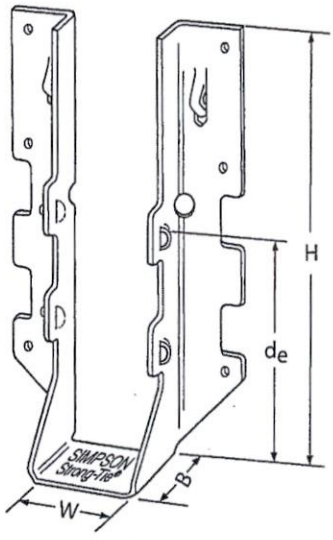

LUS28

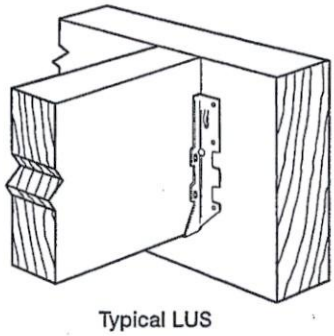

Typical LUS Installation

Model No.	Ga.	Dimensions (in.)				Fasteners		Factored Resistance (lb.)			
								D.Fir-L		S-P-F	
		W	H	B	d_e[1]	Face	Joist	Uplift (K_D=1.15)	Normal (K_D=1.00)	Uplift (K_D=1.15)	Normal (K_D=1.00)
LUS24	18	1 9/16	3 1/8	1 3/4	1 15/16	(4) 10d	(2) 10d	710	1630	645	1155
LUS24-2	18	3 1/8	3 1/8	2	1 13/16	(4) 16d	(2) 16d	835	2020	590	1435
LUS26	18	1 9/16	4 3/4	1 3/4	3 5/8	(4) 10d	(4) 10d	1420	2170	1290	1630
LUS26-2	18	3 1/8	4 7/8	2	4	(4) 16d	(4) 16d	1720	2595	1545	1920
LUS26-3	18	4 5/8	4 3/16	2	3 1/4	(4) 16d	(4) 16d	1720	2595	1545	2340
LUS28	18	1 9/16	6 5/8	1 3/4	3 3/4	(6) 10d	(6) 10d	1420	2520	1290	1790
LUS28-2	18	3 1/8	7	2	4	(6) 16d	(4) 16d	1720	3325	1545	2575
LUS28-3	18	4 5/8	6 1/4	2	3 1/4	(6) 16d	(4) 16d	1720	3325	1545	2375
LUS210	18	1 9/16	7 13/16	1 3/4	3 7/8	(8) 10d	(4) 10d	1420	2785	1290	2210
LUS210-2	18	3 1/8	9	2	6	(8) 16d	(6) 16d	2580	4500	2320	3195
LUS210-3	18	4 5/8	8 3/16	2	5 1/4	(8) 16d	(6) 16d	2580	3345	2320	2375

1. d_e is the distance from the seat of the hanger to the highest joist nail.

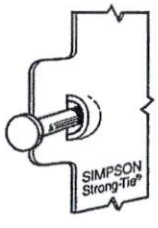

Dome Double Shear Nailing prevents tabs breaking off (available on some models).

U.S. Patent 5,603,580

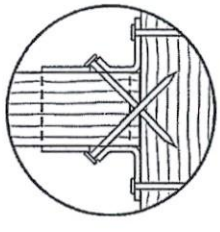

Double Shear Nailing Top View.

LICENSED PROFESSIONAL ENGINEER
4/5/2017
B. D. BUNTING
PROVINCE OF ONTARIO

LIMIT STATES DESIGN

This technical bulletin is effective until June 30, 2019, and reflects information available as of March 1, 2017. This information is updated periodically and should not be relied upon after June 30, 2019. Contact Simpson Strong-Tie for current information and limited warranty or see strongtie.com.

© 2017 Simpson Strong-Tie Company Inc.

(800) 999-5099
strongtie.com

HHUS – Double Shear Joist Hangers

SIMPSON Strong-Tie®

All HHUS hangers have double shear nailing. This patented innovation distributes the load through two points on each joist nail for greater strength. It also allows the use of fewer nails, faster installation and the use of common nails for all connections. Do not bend or remove tabs.

Material: 14 gauge

Finish: G90 galvanized

Design:

- Factored resistances are in accordance with CSA O86-14.
- Uplift resistances have been increased 15%. No further increase is permitted.
- Wood shear is not considered in the factored resistances given. The specifier must ensure that the joist and header capacities are capable of withstanding these loads.

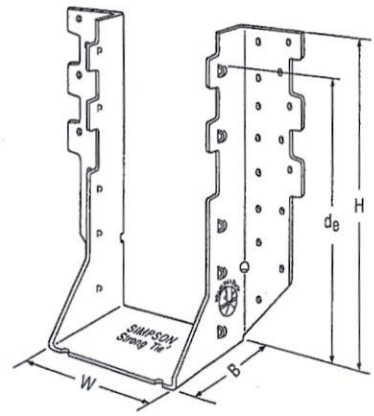

HHUS410

Installation:

- Use all specified fasteners
- Nails: 16d = 0.162" dia. x 3½" long common wire
- Double shear nails must be driven at an angle through the joist or truss into the header to achieve the table loads
- Not designed for welded or nailer applications

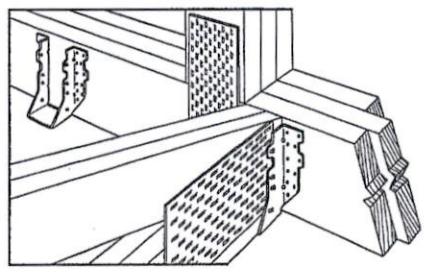

Typical HHUS Installation (Truss Designer to provide fastener quantity for connecting multiple members together)

Options:

- See current catalogue for options

Model No.	Ga.	Dimensions (in.)				Fasteners		Factored Resistance (lb.)			
								D.Fir-L		S-P-F	
		W	H	B	d_e[1]	Face	Joist	Uplift (K_D=1.15)	Normal (K_D=1.00)	Uplift (K_D=1.15)	Normal (K_D=1.00)
HHUS26-2	14	3 5/16	5 13/16	3	3 15/16	(14) 16d	(6) 16d	2850	7335	2065	5205
HHUS28-2	14	3 5/16	7 7/32	3	6 5/32	(22) 16d	(8) 16d	3765	8940	2675	6345
HHUS210-2	14	3 5/16	9 3/32	3	8	(30) 16d	(10) 16d	4745	9660	4310	7000
HHUS210-3	14	4 11/16	9	3	7 15/16	(30) 16d	(10) 16d	4745	10545	4310	7485
HHUS210-4	14	6 1/8	8 29/32	3	7 27/32	(30) 16d	(10) 16d	4745	10545	4310	7485
HHUS46	14	3 5/8	5 13/32	3	3 15/16	(14) 16d	(6) 16d	2540	7335	2065	5205
HHUS48	14	3 5/8	7 1/8	3	6 1/8	(22) 16d	(8) 16d	3765	8945	2267	6345
HHUS410	14	3 5/8	9	3	8	(30) 16d	(10) 16d	4745	9855	4310	7000
HHUS5.50/10	14	5 1/2	9	3	8	(30) 16d	(10) 16d	4745	10545	4310	7485
HHUS7.25/10	14	7 1/4	9	3 5/16	7 29/32	(30) 16d	(10) 16d	4745	10770	4310	7650

1. d_e is the distance from the seat of the hanger to the highest joist nail.

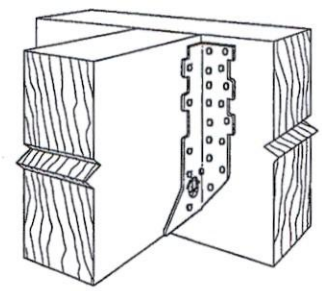

Typical HHUS Installation

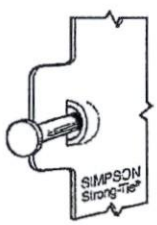

Dome Double Shear Nailing prevents tabs breaking off (available on some models).

U.S. Patent 5,603,580

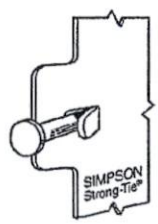

Double Shear Nailing Side View. Do not bend tab back.

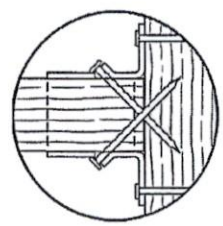

Double Shear Nailing Top View.

LIMIT STATES DESIGN

This technical bulletin is effective until June 30, 2019, and reflects information available as of March 1, 2017. This information is updated periodically and should not be relied upon after June 30, 2019. Contact Simpson Strong-Tie for current information and limited warranty or see strongtie.com.

© 2017 Simpson Strong-Tie Company Inc.

T-SPECHHUS17 3/17 exp. 6/19

(800) 999-5099
strongtie.com

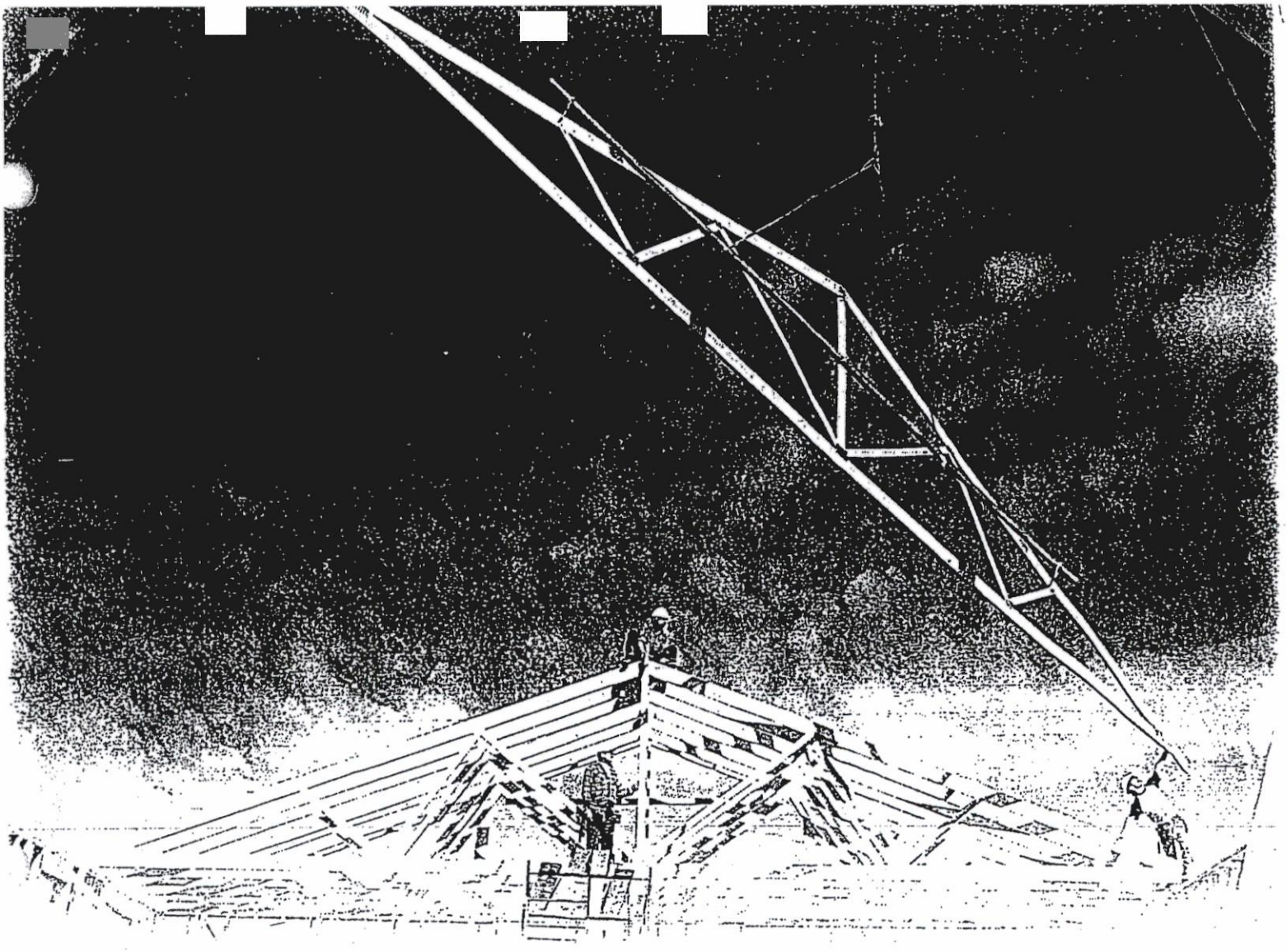

Wood Truss Installation

A Guide to proper handling, erecting and bracing metal plate connected wood trusses

Table of Content

Warning.....4

1 Unloading & Lifting.....5

2 Job Site Handling.....5

3 Hoisting.....6

4 Beginning the Erection Process.....7

5 Erection Tolerance.....8

6 Bracing.....8

7 Bracing Requirements for 3 Planes of Roof.....9

8 Stacking Materials.....10

Caution Notes.....11

Warning

General

Familiarity with the **Construction Design Documents**, the **Truss Design Drawings**, and **Truss Placement Plans** (if required by the **Construction Design Documents**) is required to properly erect, brace, and connect the trusses to the building system.

All of the care and quality involved in the design and manufacture of wood trusses can be jeopardized if the trusses are not properly handled, erected, and braced.

The consequences of improper handling, erecting, and bracing may be a collapse of the structure, which at best is a substantial loss of time and materials, and at worst is a loss of life. The majority of truss accidents occur during truss installation and not as a result of improper design or manufacture.

Prior to truss erection, the builder/erector shall meet with the erection crew for a safety and planning meeting, making sure each crew member understands his or her roles and responsibilities during the erection process.

Temporary Erection Bracing

Trusses are not marked in any way to identify the frequency, or location of temporary erection bracing.

All temporary bracing shall comply with the latest edition of *Commentary and Recommendations for Handling, Installing & Bracing Metal Plate Connected Wood Trusses* (HIB), published by the Truss Plate Institute, and/or as specified in the **Construction Design Documents** prepared by the building designer.

Permanent Truss Bracing

Permanent bracing for the roof or floor trusses is the responsibility of the building designer and should be shown on the **Construction Design Documents**. Permanent bracing locations for individual compression members of a wood truss are shown on the **Truss Design Drawings**, and shall be installed by the building or erection contractor. This bracing is needed for the proper performance of individual trusses within the roof or floor system. The design and connection of the bracing to the truss and then to the overall building system is the responsibility of the building designer, and is in addition to the permanent bracing plan, which is also specified by the building designer.

Special Design Requirements

Special design requirements, such as wind bracing, portal bracing, seismic bracing, diaphragms, shear walls, or other load transfer elements and their connections to wood trusses must be considered separately by the building designer, who shall determine size, location, and method of connections for all bracing as needed to resist these forces.

1 Unloading & Lifting

Never handle trusses flat

Beginning with the unloading process, and throughout all phases of construction, care must be taken to avoid lateral bending of trusses, which can cause damage to the lumber and metal connector plates at the joints.

Avoid lateral bending

- **Use special care in windy weather.**
- **If using a crane within 10 feet of an electric line, contact the local power company.**
- **If using a crane within 5 miles of an airport, contact the airport 30 days prior to erection to learn about any safety regulations that must be followed.**

2 Job Site Handling

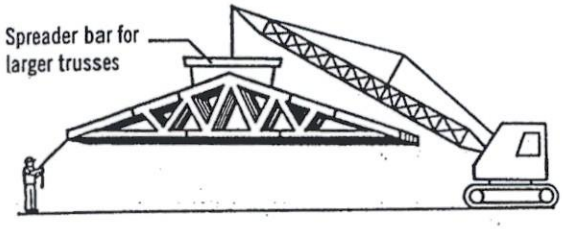

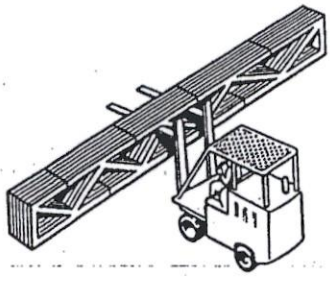

All trusses should be picked up at the top chords in a vertical position only

Proper banding and smooth ground allow for unloading of trusses without damage. This should be done as close to the building site as possible to minimize handling. Do not break banding until installation begins. Hand erection of trusses is allowed, provided excessive lateral bending is prevented.

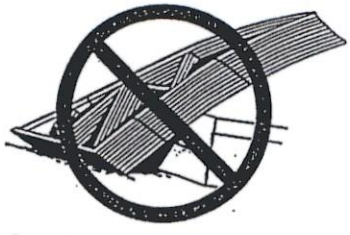

Do not store unbraced bundles upright

If trusses are stored vertically they shall be braced in a manner that will prevent tipping or topping. Generally cuting of the banding is done just prior to installation.

Do not store on uneven ground

If trusses are stored horizontally, blocking should be used on eight to ten foot centers, or as required, to minimize lateral bending and moisture gain.

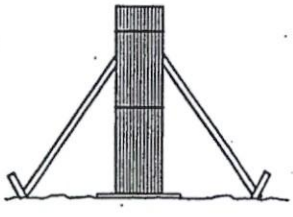

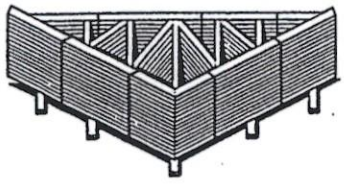

Care should be exercised when removing banding to avoid damaging trusses.

During long term storage, trusses shall be protected from the environment in a manner that provides for adequate ventilation of the trusses. If tarpaulins or other material is used, the ends shall be left open for ventilation. Plastic is not recommended, since it can trap moisture.

3 Hoisting

All trusses that are erected one at a time shall be held safely in position by the erection equipment until such time as all necessary bracing has been installed and the ends of the trusses are securely fastened to the building.

Avoid lateral bending

L ≤ 30'

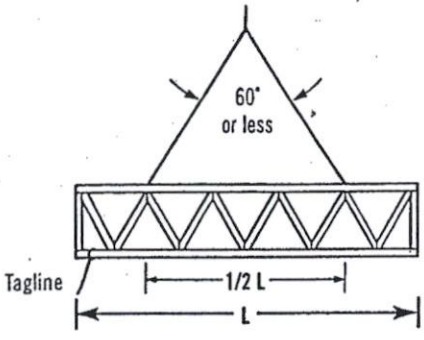

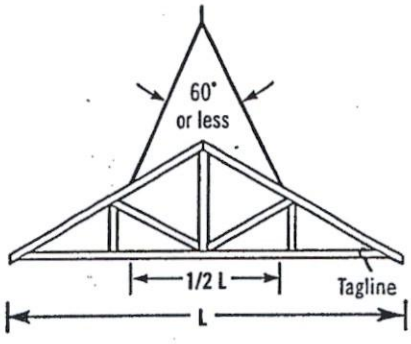

Truss sling is acceptable where these criteria are met.

30' < L ≤ 60'

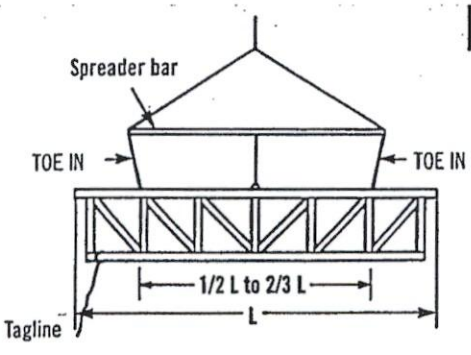

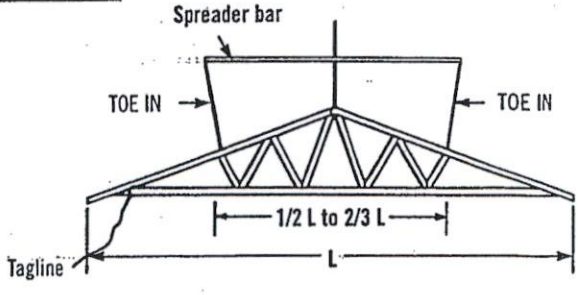

Use spreader bar in all other cases. It should be noted that the lines from the ends of the spreader bar **"TOE IN"**; if these lines should **"TOE OUT"** the truss may fold in half.

L > 60'

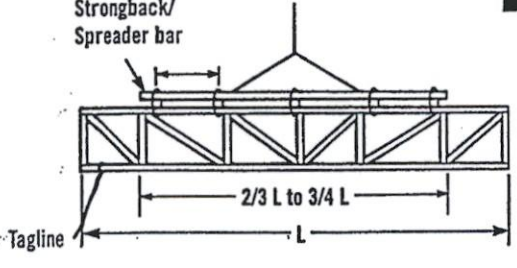

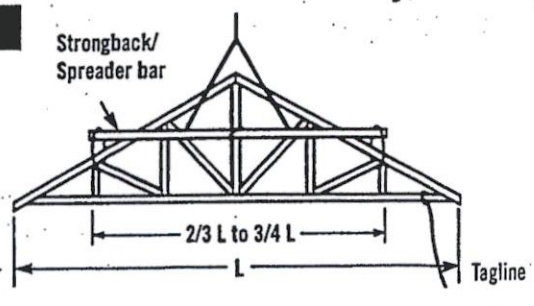

For lifting trusses with spans in excess of 60 feet, it is recommended that a strongback/spreader bar be used as illustrated. The strongback/spreader bar should be attached to the top chord and web members at intervals of approximately 10 feet. Further, the strongback/spreader bar should be at or above the mid-height of the truss to prevent overturning. The strongback/spreader bar can be of any material with sufficient strength to safely carry the weight of the truss and sufficient rigidity to adequately resist bending of the truss.

4 Beginning the Erection Process

It is important for the builder or erection contractor to provide substantial bracing for the first truss erected. The two or more trusses making up the rest of the first set are tied to and rely upon the first truss for stability. Likewise, after this first set of trusses is adequately cross-braced, the remaining trusses installed rely upon this first set for stability. Thus, the performance of the truss bracing system depends to a great extent on how well the first group of trusses is braced.

Ground Brace – Exterior

One satisfactory method ties the first unit of trusses off to a series of braces that are attached to a stake driven into the ground and securely anchored. The ground brace itself should be supported as shown below or it is apt to buckle. Additional ground braces in the opposite direction, inside the building, are also recommended.

Ground Brace – Interior

Another satisfactory method where height of building or ground conditions prohibit bracing from the exterior is to tie the first truss rigidly in place from the interior at the floor level, provided the floor is substantially completed and capable of supporting the ground bracing forces. Securely fasten the first truss to the middle of the building. Brace the bracing similar to exterior ground bracing shown at left. Set trusses from the middle toward the end of the building. Properly cross-brace the first set of trusses before removing floor braces and setting remaining trusses.

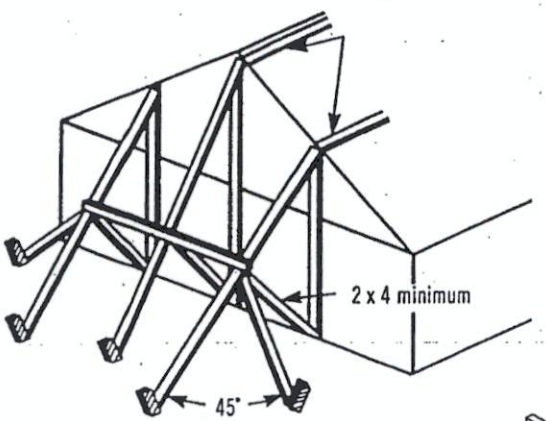

Note: Locate ground braces for first truss directly in line with all rows of top chord continuous lateral bracing (either temporary or permanent).

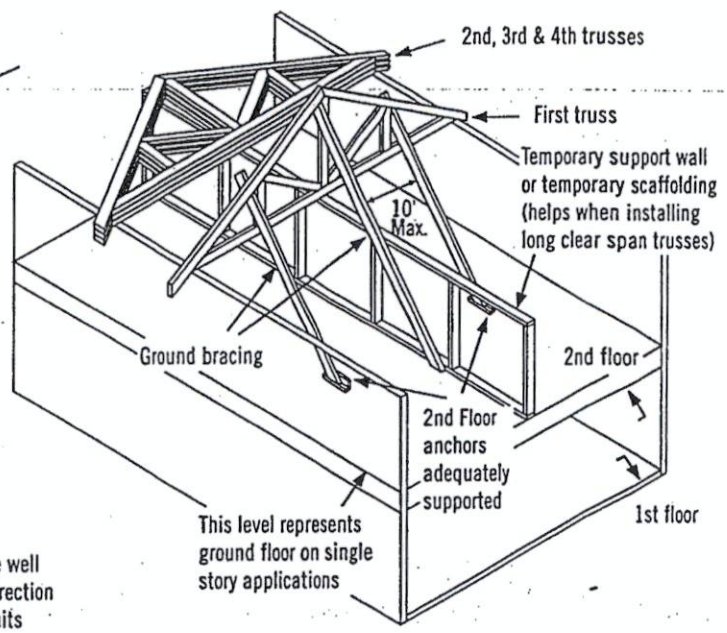

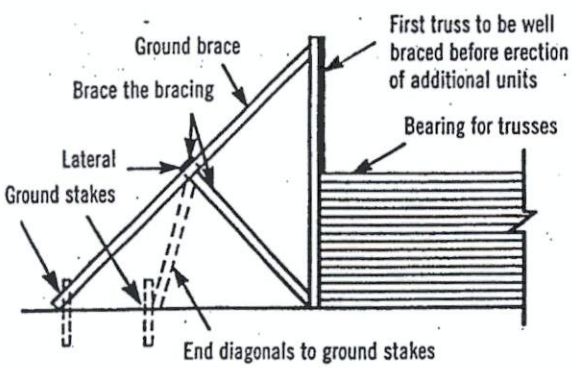

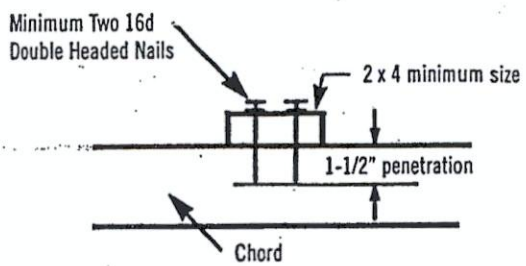

Inadequate size of bracing material or inadequate fastening is a major cause of erection dominoing.

5 Erection Tolerance

Complying with erection tolerances is critical to achieving an acceptable roof or floor line, and to accomplishing effective bracing. Setting trusses within tolerance the first time will prevent the need for the hazardous practice of respacing or adjusting trusses when roof sheathing or roof purlins are installed. Trusses leaning or bowing can cause nails to miss the top chords when sheathing is applied, and create cumulative stresses on the bracing, which is a frequent cause of dominoing.

When sheathing, make sure nails are driven into the top chord of the trusses.

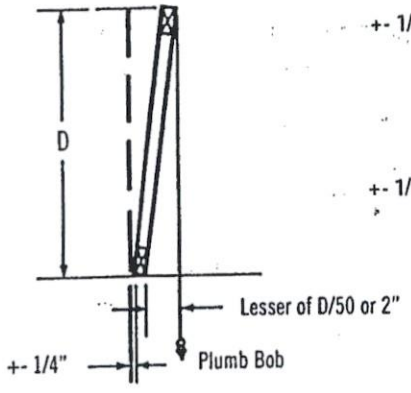

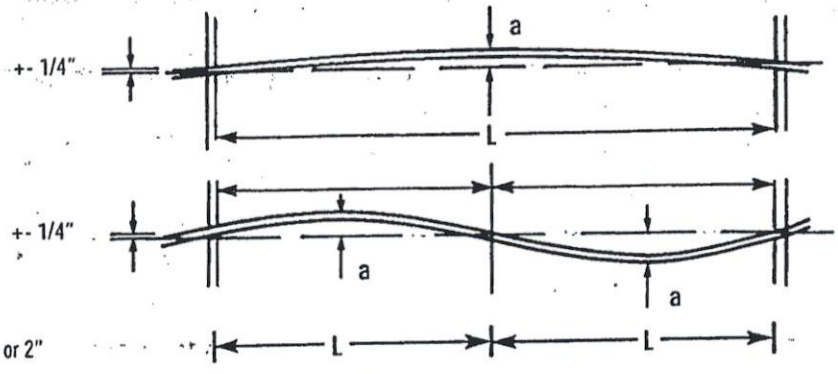

L = 16' to 32', a = 1"
L = 32' & over, a = 2"

6 Bracing

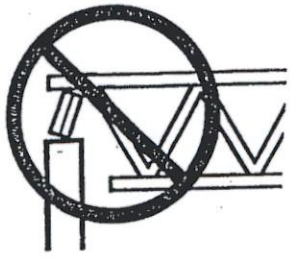

Do not install trusses on temporarily connected supports

Do not walk on unbraced trusses

Do not walk on trusses or gable ends lying flat

Nails in withdrawal (parallel to force)

All anchors, hangers, tie-downs, seats, bearing ledgers, etc., that are part of the supporting structure shall be accurately and properly placed and permanently attached before truss installation begins. No trusses shall ever be installed on anchors or ties that have temporary connections to the supporting structure.

Nailing scabs to the end of the building to brace the first truss is not recommended.
All nailing of bracing should be done so that nails are driven perpendicular to the direction of force, as shown at right.

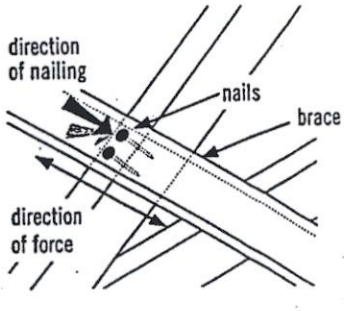

Well nailed (perpendicular to force)

7 Bracing Requirements for 3 Planes of Roof

Temporary erection bracing must be applied to three planes of the roof system to ensure stability: Plane 1) **Top Chord** (sheathing), Plane 2) **Bottom Chord** (ceiling plane), and Plane 3) **Web Member** plane or vertical plane perpendicular to trusses.

1) Top Chord Plane

Most important to the builder or erection contractor is bracing in the plane of the top chord. Truss top chords are susceptible to lateral buckling before they are braced or sheathed.

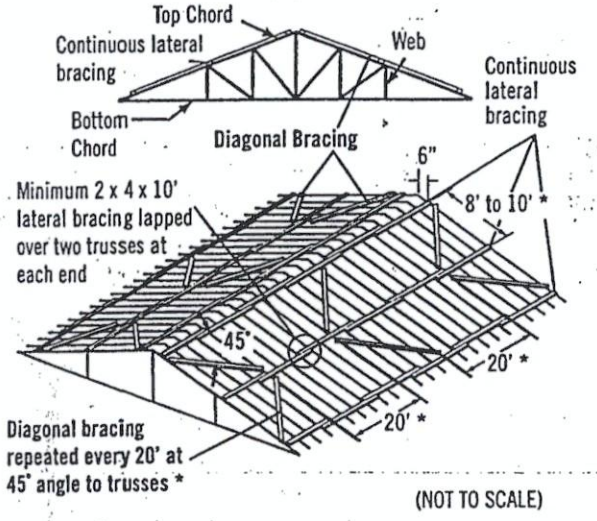

(NOT TO SCALE)

Exact spacing between trusses should be maintained as bracing is installed to avoid the hazardous practice of removing bracing to adjust spacing. This act of "adjusting spacing" can cause trusses to topple if connections are removed at the wrong time.

2) Bottom Chord Plane

In order to hold proper spacing on the bottom chord, temporary bracing is recommended on the top of the bottom chord.

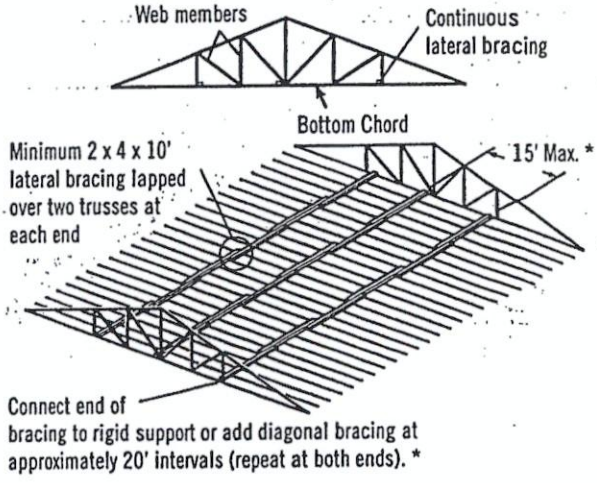

*. Long spans, heavy loads or other spacing configurations may require closer spacing between lateral bracing and closer intervals between diagonals. Consult the building designer or HIB and DSB (*Recommended Design Specification for Temporary Bracing of Metal-Plate Connected Wood Trusses*) for details.

Diagonal or cross-bracing is very important!

3) Web Member Plane

"X" bracing, as shown, is critical in preventing trusses from leaning or dominoing. Repeat as shown to create a succession of rigid units.

X-bracing should be installed on vertical web members wherever possible, at or near lateral bracing. Plywood or OSB may be substituted for X-bracing.

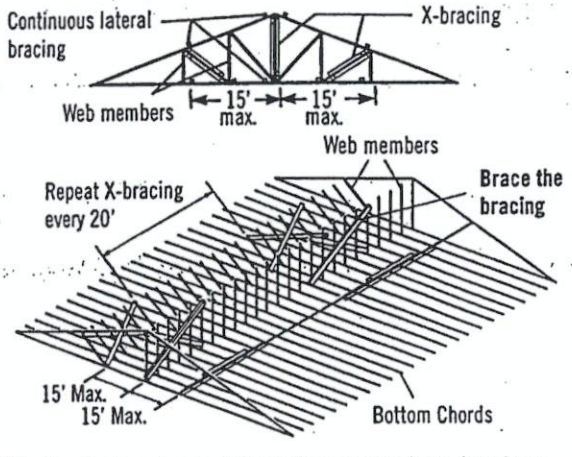

Note: Top chords and some web members are not shown, in order to make drawings more readable.

Do not use short blocks to brace individual trusses without a specific bracing plan detailing their use

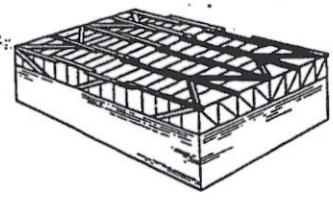

Bracing requirements using the same principles apply to parallel chord trusses

8 Stacking Materials

Do not proceed with building completion until all bracing is securely and properly in place

Never stack materials on unbraced or inadequately braced trusses

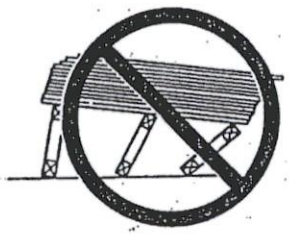

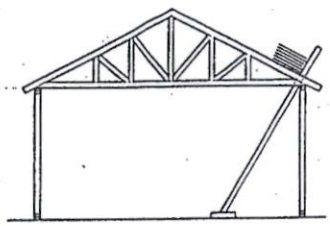

Proper distribution of construction materials is a must during construction.

Never stack materials near a peak

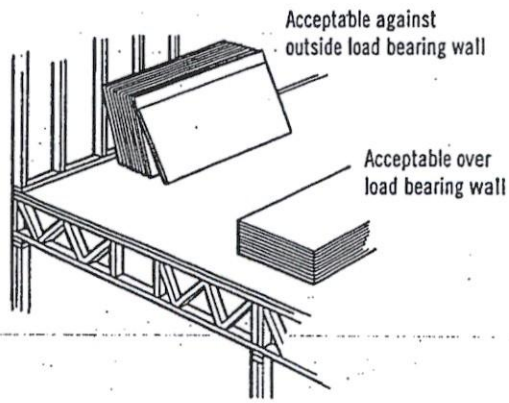

Never stack materials on the cantilever of a truss

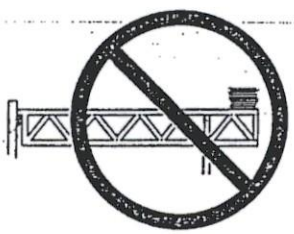

Always stack materials over two or more trusses.

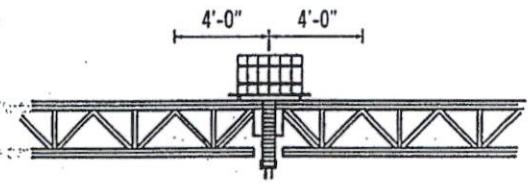

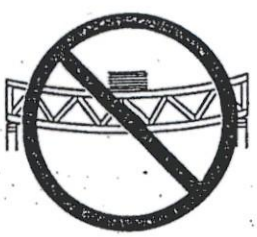

Never overload small groups or single trusses. Position load over as many trusses as possible.

Roofing and mechanical contractors are cautioned to stack materials only along outside supporting members or directly over inside supporting members. Trusses are not designed for dynamic loads (i.e., moving vehicles). Extreme care should be taken when loading and stacking construction materials (rolled roofing, mechanical equipment, etc.) on the roof or floor system.

Never cut any structural member of a truss.

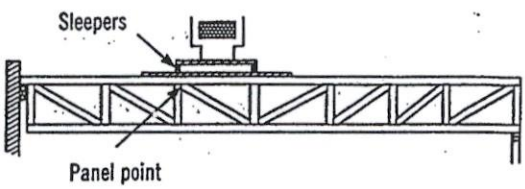

Sleepers for mechanical equipment should be located at panel points (joints) or over main supporting members, and only on trusses that have been designed for such loads.

Caution Notes

Errors in building lines and/or dimensions, or errors by others shall be corrected by the contractor or responsible construction trade subcontractor or supplier **before** erection of trusses begins.

Cutting of nonstructural overhangs is considered a part of normal erection and shall be done by the builder or erection contractor.

Any field modification that involves the cutting, drilling, or relocation of any structural truss member or connector plate shall not be done without the approval of the truss manufacturer or a licensed design professional.

The methods and procedures outlined are intended to ensure that the overall construction techniques employed will put floor and roof trusses **safely** in place in a completed structure. These recommendations for bracing wood trusses originate from the collective experience of leading technical personnel in the wood truss industry, but must, due to the nature of responsibilities involved, be presented only as a **guide** for use by a qualified building designer, builder, or erection contractor. Thus, the Wood Truss Council of America expressly disclaims any responsibility for damages arising from the use, application, or reliance on the recommendations and information contained herein.

[Selected text and figures referenced or reproduced from HIB and DSB by permission of the Truss Plate Institute, Madison, WI.]

THE CANADIAN WOOD TRUSS ASSOCIATION

L'ASSOCIATION CANADIENNE DES FABRICANTS DE FERMES DE BOIS

1400 Blair Place, Suite 210, Ottawa, ON K1J 9B8
Tel.: 613-747-5544 Fax: 613-747-6264

Wood Truss Council of America

One WTCA Center
6300 Enterprise Lane, Madison, WI 53719-1140
Tel.: 608-274-4849 Fax: 608-274-3329
wtca@woodtruss.com www.woodtruss.com