BRAMPTON Flower City
brampton.ca

Planning and Development Services
Building Division
8850 McLaughlin Road, Unit 1
Brampton, ON L6Y 5T1

CITY OF BRAMPTON – BUILDING DIVISION

ROOF TRUSSES

APPLICATION NO.:	19-567619 000 00 CM	FOLDER TYP.:	**CM**
DESCRIPTION OF PROJECT:	PLAN M2039	SUB TYP.:	**Single Family Detached**
BUILDERS NAME:	**GOLD PARK HOMES**		
PLAN NUMBER:		MODEL NAME:	**2017/38-10**

CERTIFIED MODEL DOCUMENTS					
PAGES:	**DESCRIPTION OF DOCUMENTS**				
B	**ROOF TRUSS LAYOUTS & COMPONENTS:**				
	ELEVATION	DESCRIPTION:	COMMENTS		
2		.....			
3		.....			
		.....			
		.....			
		.....			
		.....			
ENTERED BY:	....			**DATE:**	yyyy/mm/dd

For conventional framing roof / ceilings framing shall conform to OBC.9.23

All work shall conform to the Ontario Building Code O. Reg. 332/12 as amended

ALPA-BARRIE

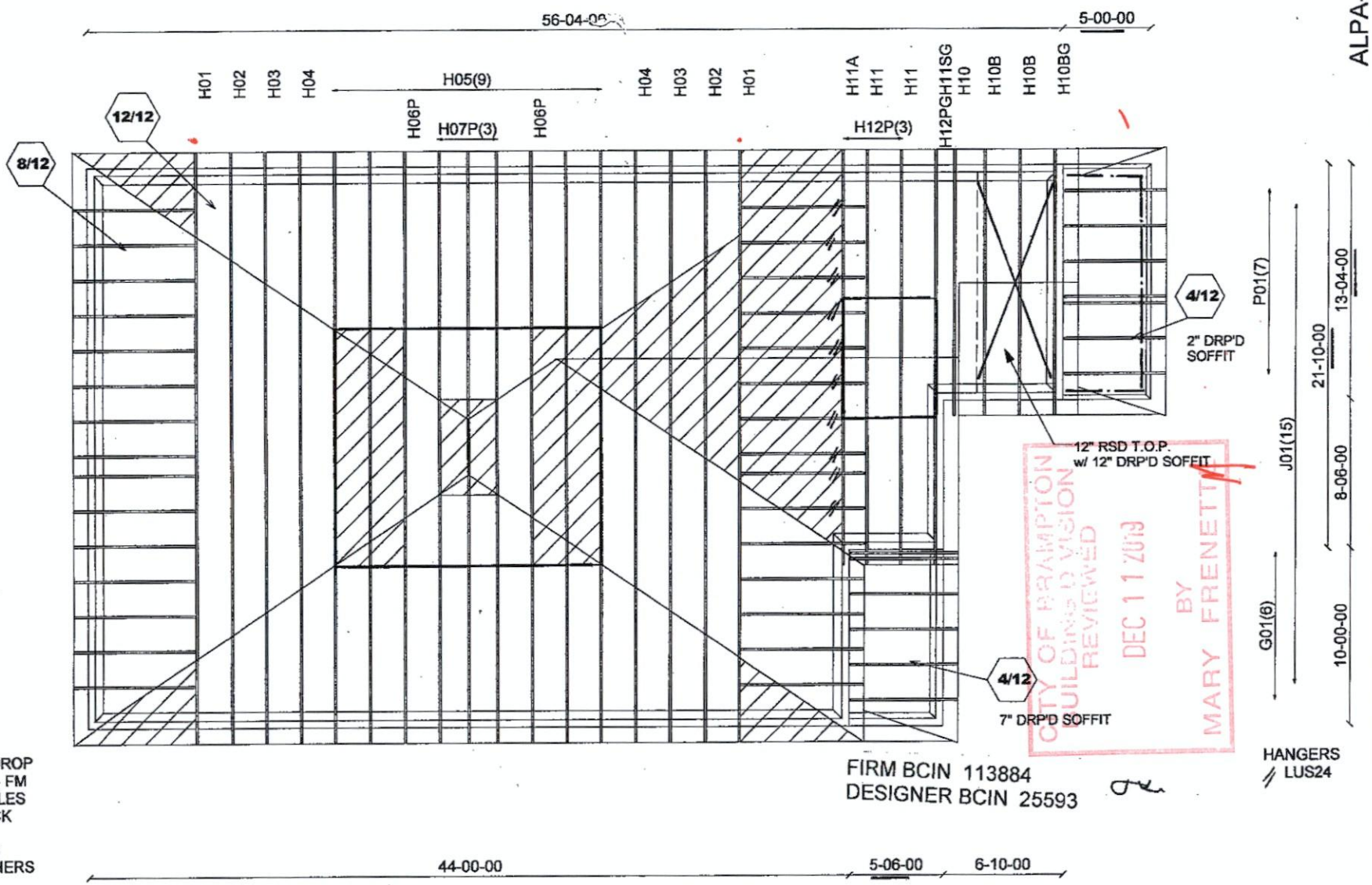

12" FIN. OH.
RSD. HEEL - 0" DROP
(2" x 6" FASCIA) - FM
ASPHALT SHINGLES
2" X 6" BRG/BRICK

PIGGYBACK TRS
PURLINS BY OTHERS

FIRM BCIN 113884
DESIGNER BCIN 25593

HANGERS
// LUS24

CITY OF BRAMPTON
BUILDING DIVISION
REVIEWED
DEC 11 2019
BY
MARY FRENETTE

THE COPLAND

Mitek V. 8.2.0

ALL CONVENTIONAL FRAMING TO CONFORM WITH PART 9 O.B.C. LATEST EDITION. ROOF RAFTERS THAT CROSS OVER TRUSSES TO BE 2X4 SPF #2 @ 24" O.C WITH A VERT. POST TO THE TRUSS UNDERNEATH AT EACH CROSS POINT. VERT. POSTS LONGER THAN 6' TO HAVE LATERAL BRACING SO THAT THE DISTANCE BETWEEN END POINTS & BETWEEN ROWS OF BRACING DOES NOT EXCEED 6'

CONVENTIONAL FRAMING BY OTHERS

E19112486 – E19112503

Job Track: 39002	Builder / Location: GOLD PARK HOMES / BRAMPTON	Model / Elevation: 38-10 / A	
Layout ID: 313989	Project: MCLAUGHLIN AND MAYFIELD	THESE DRAWINGS CONSTITUTE THE PROPERTY OF ALPA ROOF TRUSSES INC., SHALL NOT BE REPRODUCED, PUBLISHED, OR REDISTRIBUTED IN ANY MANNER OR UTILIZED FOR ANY PURPOSE OTHER THAN THE MANUFACTURE OF TRUSSES BY ALPA ROOF TRUSSES INC AND WILL BE RETRACTED BY ALPA ROOF TRUSSES INC IF UTILIZED FOR ANY OTHER PURPOSE.	
Plan Log: 104423	Date: 10/22/2019 Designer: AMANDA		

EWP DESIGN INC.

(905) 832-2250 FAX (905) 832-0286

RESPONSIBILITIES AND SPECIFICATIONS

RESPONSIBILITIES

1. EWP DESIGN INC. is responsible for the design of trusses as individual components.
2. It is the responsibility of others to ascertain that the design loads utilized on each drawing meet or exceed the actual dead load imposed by the structure, the live load imposed by the intended use and the snow load imposed by local building code or authorities with jurisdictions.
3. All dimensions are to be verified by the owner, contractor, architect or other authorities with jurisdictions before truss fabrication.
4. EWP DESIGN INC. bears no responsibility for the erection of trusses. Persons erecting trusses are cautioned to seek professional advice regarding the temporary and permanent bracing for the system. Bracing shown on EWP DESIGN INC. drawing is specified for the truss as a component only and forms an integral part of the truss design.
5. It is the truss manufacturer's responsibility to ensure that trusses are manufactured in conformance with specifications of EWP DESIGN INC. as outlined below.

SPECIFICATIONS

1. Trusses designed by EWP DESIGN INC. conform to the relevant section of the Ontario Building Code of Canada (Part 9 or Part 4) or to the Canadian code for farm buildings, whichever applies to the building type, as indicated on the EWP DESIGN INC. drawings, and conform to the design procedures established by the Truss Plate Institute of Canada. Unit stresses used for truss designs are as per the edition of CSA-O86 shown on EWP DESIGN INC. drawings.
2. Lumber is to be the size, species and grade as specified on EWP DESIGN INC. drawings.
3. Moisture content of lumber shall not exceed 19% in service unless specified otherwise.
4. Metal connector plates shall be applied to both faces of truss at each joint and shall be positioned as specified.
5. Top chords of trusses are assumed to be continuously braced laterally by roof sheathing or by purlins at intervals not exceeding 12.5 times the thickness of top chord member.
6. Bottom chords shall be laterally braced at intervals not exceeding 3M (10') o.c., where rigid ceiling is not applied directly to the underside of chords.

THESE DRAWINGS CONSTITUTE THE PROPERTY OF EWP DESIGN INC., SHALL NOT BE REPRODUCED, PUBLISHED, OR REDISTRIBUTED IN ANY MANNER OR UTILIZED FOR ANY PURPOSE OTHER THAN THE MANUFACTURE OF TRUSSES BY THE ALPA LUMBER GROUP, AND WILL BE RETRACTED BY EWP DESIGN INC. IF UTILIZED FOR ANY OTHER PURPOSE.

February 1, 2019

JOB NAME	TRUSS NAME	QUANTITY	PLY	JOB DESC.	DRWG NO.
313989	G01	1	1	TRUSS DESC. JT-39002	E-19112486

Alpa Roof Truss, Maple

Version 8.300 S Aug 9 2019 MiTek Industries, Inc. Fri Nov 8 11:48:31 2019 Page 1
ID:VRLqmcIDifIZCj2mk6F92VyQuye-MsNGob33GKE0RkU1Q3m5j8CFxk9SD9C03qCGlEyLGUU

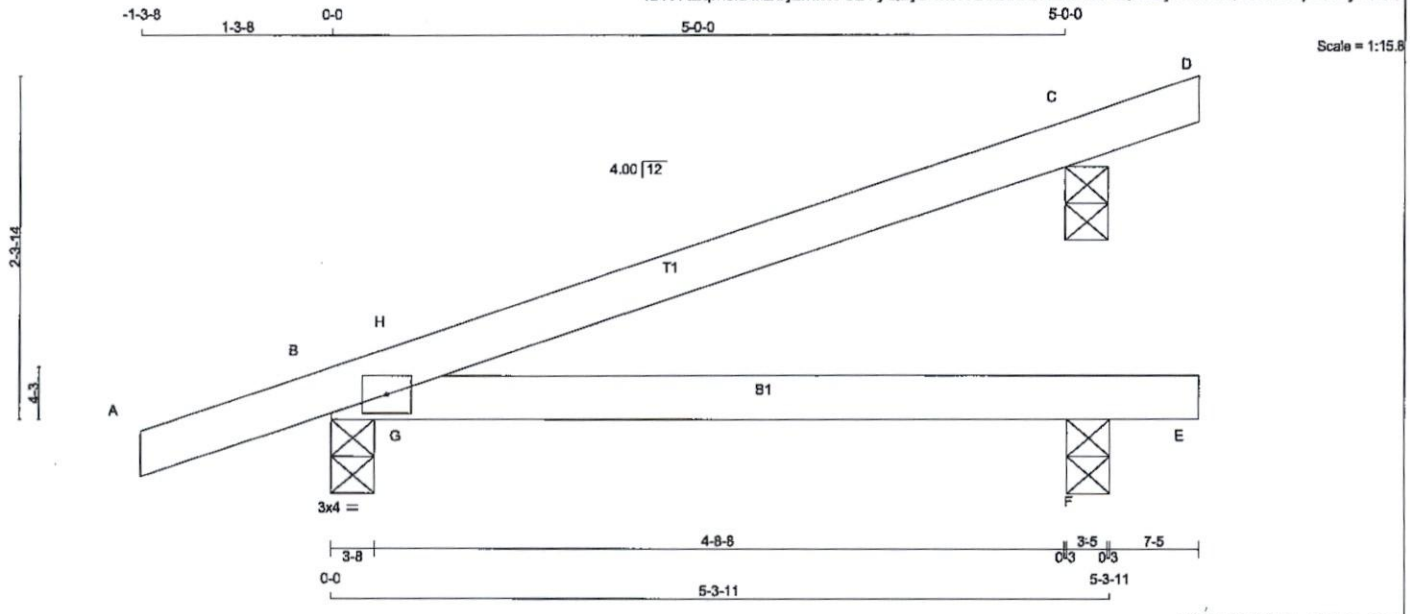

TOTAL WEIGHT = 6 X 16 = 93 lb [M]

LUMBER
N. L. G. A. RULES

CHORDS	SIZE		LUMBER	DESCR.
A - D	2x4	DRY	No.2	SPF
B - E	2x4	DRY	No.2	SPF

DRY: SEASONED LUMBER.

PLATES (table is in inches)

JT	TYPE	PLATES	W	LEN	Y	X
B	TMB1-I	MT20	3.0	4.0		

NOTE: Lateral brace(s) shown shall be 2x4 SPF #2

LICENSED PROFESSIONAL ENGINEER
11/08/2019
R. TURENNE
100157040
PROVINCE OF ONTARIO

DIMENSIONS, SUPPORTS AND LOADINGS SPECIFIED BY FABRICATOR TO BE VERIFIED BY BUILDING DESIGNER

BEARINGS

JT	FACTORED GROSS REACTION VERT	HORZ	MAXIMUM FACTORED GROSS REACTION DOWN	HORZ	UPLIFT	INPUT BRG IN-SX	REQRD BRG IN-SX
B	380	0	380	0	0	3-8	1-8
F	89	0	89	0	0	3-8	1-8
C	260	0	260	0	0	3-8	3-8

BEVELED PLATE OR SHIM REQUIRED TO PROVIDE FULL BEARING SURFACE WITH TRUSS CHORD AT JT(S): C

UNFACTORED REACTIONS

JT	1ST LCASE COMBINED	MAX./MIN. COMPONENT REACTIONS SNOW	LIVE	PERM.LIVE	WIND	DEAD	SOIL
B	267	182 / 0	0 / 0	0 / 0	0 / 0	85 / 0	0 / 0
F	67	19 / 0	0 / 0	0 / 0	0 / 0	48 / 0	0 / 0
C	181	139 / 0	0 / 0	0 / 0	0 / 0	42 / 0	0 / 0

BEARING MATERIAL TO BE SPF NO.2 OR BETTER AT JOINT(S) B, F, C

BRACING
TOP CHORD TO BE SHEATHED OR MAX. PURLIN SPACING = 6.25 FT.
MAX. UNBRACED BOTTOM CHORD LENGTH = 10.00 FT OR RIGID CEILING DIRECTLY APPLIED.

ALL PITCH BREAKS AND PERIMETER CORNER JOINTS MUST BE LATERALLY RESTRAINED.

LOADING
TOTAL LOAD CASES: (4)

CHORDS

MEMB. FR-TO	MAX. FACTORED FORCE (LBS)	FACTORED VERT. LOAD LC1 (PLF) FROM	TO	MAX CSI (LC)	MAX. UNBRAC LENGTH
A- B	0 / 16	-84.9	-84.9	0.11 (1)	10.00
B- H	-19 / 10	-84.9	-84.9	0.06 (4)	6.25
H- C	-1 / 2	-84.9	-84.9	0.29 (1)	10.00
C- D	-11 / 0	-84.9	-84.9	0.04 (1)	6.25
B- G	0 / 0	-18.5	-18.5	0.20 (1)	10.00
G- F	0 / 0	-18.5	-18.5	0.21 (1)	10.00
F- E	0 / 0	-18.5	-18.5	0.01 (4)	10.00

WEBS

MEMB. FR-TO	MAX. FACTORED FORCE (LBS)	MAX CSI (LC)
G- H	-249 / 11	0.00 (1)

DESIGN CRITERIA

SPECIFIED LOADS:

TOP CH.	LL	=	23.3	PSF
	DL	=	6.0	PSF
BOT CH.	LL	=	0.0	PSF
	DL	=	7.4	PSF
TOTAL LOAD		=	36.7	PSF

SPACING = 24.0 IN. C/C

THIS TRUSS IS DESIGNED FOR RESIDENTIAL OR SMALL BUILDING REQUIREMENTS OF PART 9, NBCC 2010, NBCC 2015

THIS DESIGN COMPLIES WITH:
- PART 9 OF BCBC 2018 , OBC 2012 , ABC 2019
- CSA 086-09, CSA 086-14
- TPIC 2011, TPIC 2014

DESIGN ASSUMPTIONS
- PERCENTAGE OF GROUND SNOW LOAD IS USER-DEFINED.

(65 % OF 27.2 P.S.F. G.S.L. PLUS 8.4 P.S.F. RAIN LOAD) EQUALS 23.3 P.S.F. SPECIFIED ROOF LIVE LOAD

ALLOWABLE DEFL.(LL)= L/360 (0.19")
CALCULATED VERT. DEFL.(LL) = L/ 999 (0.04")
ALLOWABLE DEFL.(TL)= L/360 (0.19")
CALCULATED VERT. DEFL.(TL) = L/ 768 (0.08")

CANTILEVER DEFLECTION:
ALLOWABLE DEFL.(TL)= L/120 (0.19")
CALCULATED VERT. DEFL.(TL) = L/ 999 (0.00")

CSI: TC=0.29/1.00 (C-H:1) , BC=0.21/1.00 (F-G:1) , WB=0.00/1.00 (G-H:1) , SSI=0.21/1.00 (B-G:1)

DOL LUMBER=1.00 NAIL=1.00 LS BEND=1.10 COMP=1.10 SHEAR=1.10 TENS= 1.10

COMPANION LIVE LOAD FACTOR = 1.00

TRUSS PLATE MANUFACTURER IS NOT RESPONSIBLE FOR QUALITY CONTROL IN THE TRUSS MANUFACTURING PLANT .

NAIL VALUES

PLATE	GRIP(DRY) (PSI) MAX	MIN	SHEAR (PLI) MAX	MIN	SECTION (PLI) MAX	MIN
MT20	618	354	1667	788	1987	1656

PLATE PLACEMENT TOL. = 0.250 inches

PLATE ROTATION TOL. = 5.0 Deg.

JSI GRIP= 0.25 (B) (INPUT = 0.90)
JSI METAL= 0.07 (B) (INPUT = 1.00)

JOB NAME	TRUSS NAME	QUANTITY	PLY	JOB DESC.	DRWG NO.
313989	H01		1	TRUSS DESC. JT-39002	E-19112487

Alpa Roof Truss, Maple

Version 8.300 S Aug 9 2019 MiTek Industries, Inc. Fri Nov 8 11:48:34 2019 Page 1
ID:VRLqmcIDifiZCj2mk6F92VyQuye-nR3ORc5xYFcalCDc5CJoKnpgSx9oQL4SmoRwJZyLGUR

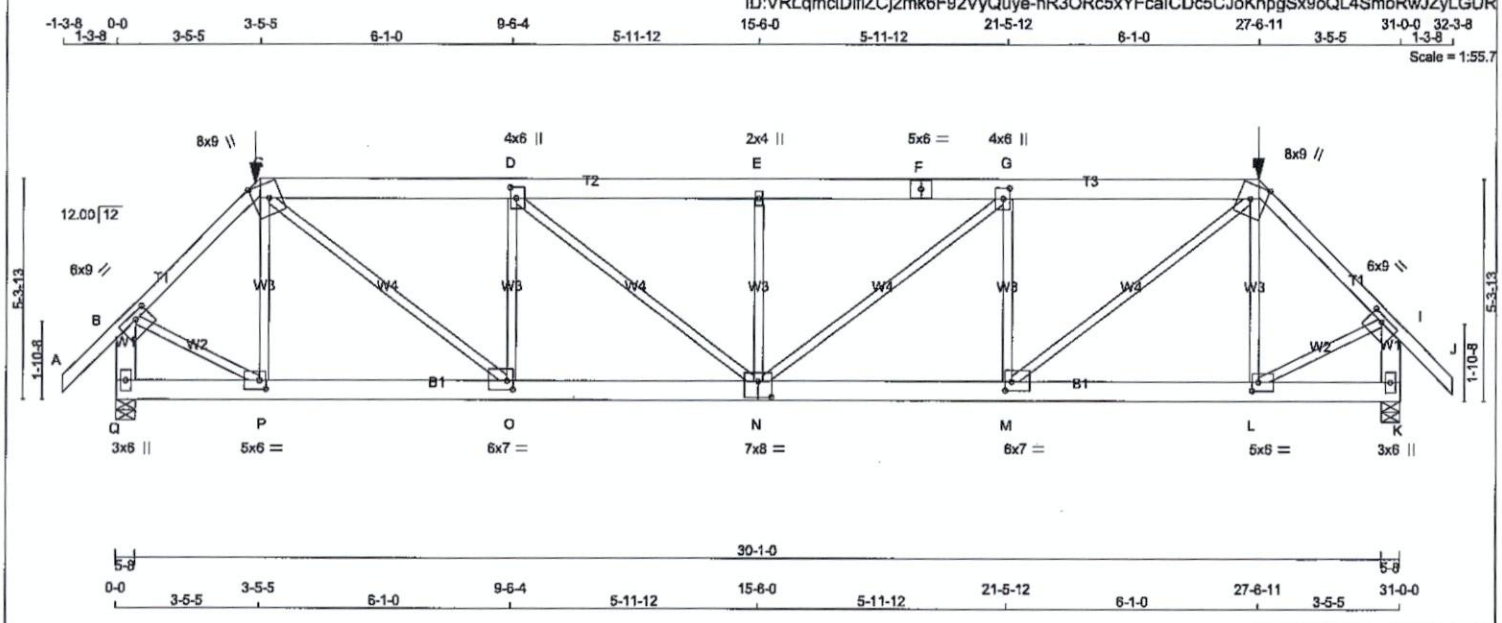

TOTAL WEIGHT = 2 X 167 = 334 lb [M]

LUMBER
N. L. G. A. RULES

CHORDS	SIZE		LUMBER	DESCR.
A - C	2x4	DRY	No.2	SPF
C - F	2x6	DRY	No.2	SPF
F - H	2x6	DRY	No.2	SPF
H - J	2x4	DRY	No.2	SPF
Q - B	2x6	DRY	No.2	SPF
K - I	2x6	DRY	No.2	SPF
Q - N	2x6	DRY	2100F 1.8E	SPF
N - K	2x6	DRY	2100F 1.8E	SPF
ALL WEBS EXCEPT	2x3	DRY	No.2	SPF

DRY: SEASONED LUMBER.

PLATES (table is in inches)

JT	TYPE	PLATES	W	LEN	Y	X
B	TMVW-t	MT20	6.0	9.0	1.75	4.00
C	TTWW+m	MT20	8.0	9.0	Edge	4.50
D	TMWW+t	MT20	4.0	6.0	3.00	1.75
E	TMW+w	MT20	2.0	4.0		
F	TS-t	MT20	5.0	6.0		
G	TMWW+t	MT20	4.0	6.0	3.00	1.75
H	TTWW+m	MT20	8.0	9.0	Edge	4.50
I	TMVW-t	MT20	6.0	9.0	1.75	4.00
K	BMV1+p	MT20	3.0	6.0		
L	BMWW-t	MT20	5.0	6.0	2.50	1.75
M	BMWW-t	MT20	6.0	7.0	2.50	1.75
N	BSWWW-t	MT20	7.0	8.0	4.50	4.00
O	BMWW-t	MT20	6.0	7.0	2.50	1.75
P	BMWW-t	MT20	5.0	6.0	2.50	1.75
Q	BMV1+p	MT20	3.0	6.0		

Edge - INDICATES REFERENCE CORNER OF PLATE TOUCHES EDGE OF CHORD.

NOTE: Lateral brace(s) shown shall be 2x4 SPF #2

LICENSED PROFESSIONAL ENGINEER
11/08/2019
R. TURENNE
100157040
PROVINCE OF ONTARIO

DIMENSIONS, SUPPORTS AND LOADINGS SPECIFIED BY FABRICATOR TO BE VERIFIED BY BUILDING DESIGNER

BEARINGS

JT	FACTORED GROSS REACTION VERT	HORZ	MAXIMUM FACTORED GROSS REACTION DOWN	HORZ	UPLIFT	INPUT BRG IN-SX	REQRD BRG IN-SX
Q	3203	0	3203	0	0	5-8	3-0
K	3203	0	3203	0	0	5-8	3-0

UNFACTORED REACTIONS

JT	1ST LCASE COMBINED	MAX./MIN. COMPONENT REACTIONS SNOW	LIVE	PERM.LIVE	WIND	DEAD	SOIL
Q	2272	1448 / 0	0 / 0	0 / 0	0 / 0	825 / 0	0 / 0
K	2272	1448 / 0	0 / 0	0 / 0	0 / 0	825 / 0	0 / 0

BEARING MATERIAL TO BE SPF NO.2 OR BETTER AT JOINT(S) Q, K
BEARING SIZE FACTOR = 1.15 AT JNT(S) Q, K (BASED ON SUPPORT DEPTH = 1-8)

BRACING
TOP CHORD TO BE SHEATHED OR MAX. PURLIN SPACING = 3.18 FT.
MAX. UNBRACED BOTTOM CHORD LENGTH = 10.00 FT OR RIGID CEILING DIRECTLY APPLIED.

ALL PITCH BREAKS AND PERIMETER CORNER JOINTS MUST BE LATERALLY RESTRAINED.

LOADING
TOTAL LOAD CASES: (4)

CHORDS

MEMB. FR-TO	MAX. FACTORED FORCE (LBS)	FACTORED VERT. LOAD LC1 (PLF) FROM	TO	MAX CSI (LC)	MAX. UNBRAC LENGTH
A- B	0 / 42	-84.9	-84.9	0.13 (1)	10.00
B- C	-2931 / 0	-84.9	-84.9	0.35 (1)	3.75
C- D	-4458 / 0	-167.1	-167.1	0.61 (1)	3.47
D- E	-5153 / 0	-167.1	-167.1	0.66 (1)	3.18
E- F	-5153 / 0	-167.1	-167.1	0.66 (1)	3.18
F- G	-5153 / 0	-167.1	-167.1	0.66 (1)	3.18
G- H	-4458 / 0	-167.1	-167.1	0.61 (1)	3.47
H- I	-2931 / 0	-84.9	-84.9	0.35 (1)	3.75
I- J	0 / 42	-84.9	-84.9	0.13 (1)	10.00
Q- B	-3176 / 0	0.0	0.0	0.25 (1)	5.89
K- I	-3176 / 0	0.0	0.0	0.25 (1)	5.89
Q- P	0 / 0	-36.4	-36.4	0.06 (4)	10.00
P- O	0 / 2063	-36.4	-36.4	0.16 (1)	10.00
O- N	0 / 4458	-36.4	-36.4	0.29 (1)	10.00
N- M	0 / 4458	-36.4	-36.4	0.29 (1)	10.00
M- L	0 / 2063	-36.4	-36.4	0.16 (1)	10.00
L- K	0 / 0	-36.4	-36.4	0.06 (4)	10.00

WEBS

MEMB. FR-TO	MAX. FACTORED FORCE (LBS)	MAX CSI (LC)
P- C	-613 / 0	0.23 (1)
C- O	0 / 3069	0.76 (1)
O- D	-1715 / 0	0.65 (1)
D- N	0 / 896	0.22 (1)
N- E	-921 / 0	0.35 (1)
N- G	0 / 896	0.22 (1)
M- G	-1715 / 0	0.65 (1)
M- H	0 / 3069	0.76 (1)
L- H	-613 / 0	0.23 (1)
B- P	0 / 2240	0.55 (1)
L- I	0 / 2240	0.55 (1)

FACTORED CONCENTRATED LOADS (LBS)

JT	LOC.	LC1	MAX-	MAX+	FACE	DIR.	TYPE	HEEL	CONN.
C	3-5-5	-213	-213	—	FRONT	VERT	TOTAL	—	C1
H	27-6-11	-213	-213	—	FRONT	VERT	TOTAL	—	C1

DESIGN CRITERIA

SPECIFIED LOADS:

TOP CH.	LL	=	23.3	PSF
	DL	=	6.0	PSF
BOT CH.	LL	=	0.0	PSF
	DL	=	7.4	PSF
TOTAL LOAD		=	36.7	PSF

SPACING = 24.0 IN. C/C

LOADING IN FLAT SECTION BASED ON A SLOPE OF 2.00/12 MINIMUM

GIRDER TYPE: CPrimeHip
SIDE SETBACK = 3-5-5
END SETBACK = 5-10-8
END WALL WIDTH = 0-0
CORNER FRAMING TYPE: CONVENTIONAL
END JACK TYPE: CONVENTIONAL
APPLIED TO FRONT SIDE
- ADDT'L LOADS BASED ON 55 % OF GSL.

THIS TRUSS IS DESIGNED FOR RESIDENTIAL OR SMALL BUILDING REQUIREMENTS OF PART 9, NBCC 2010, NBCC 2015

THIS DESIGN COMPLIES WITH:
- PART 9 OF BCBC 2018 , OBC 2012 , ABC 2019
- CSA 086-09, CSA 086-14
- TPIC 2011, TPIC 2014

(55 % OF 27.2 P.S.F. G.S.L. PLUS 8.4 P.S.F. RAIN LOAD) EQUALS 23.3 P.S.F. SPECIFIED ROOF LIVE LOAD

ALLOWABLE DEFL.(LL)= L/360 (1.03")
CALCULATED VERT. DEFL.(LL) = L/ 999 (0.18")
ALLOWABLE DEFL.(TL)= L/360 (1.03")
CALCULATED VERT. DEFL.(TL) = L/ 999 (0.33")

CSI: TC=0.66/1.00 (D-E:1) , BC=0.29/1.00 (N-O:1) , WB=0.76/1.00 (C-O:1) , SSI=0.40/1.00 (C-D:1)

DOL LUMBER=1.00 NAIL=1.00 LS BEND=1.00 COMP=1.00 SHEAR=1.00 TENS= 1.00

COMPANION LIVE LOAD FACTOR = 1.00

AUTOSOLVE HEELS OFF

TRUSS PLATE MANUFACTURER IS NOT RESPONSIBLE FOR QUALITY CONTROL IN THE TRUSS MANUFACTURING PLANT .

NAIL VALUES

PLATE	GRIP(DRY) (PSI) MAX	MIN	SHEAR (PLI) MAX	MIN	SECTION (PLI) MAX	MIN
MT20	618	354	1667	788	1987	1656

PLATE PLACEMENT TOL. = 0.250 inches

PLATE ROTATION TOL. = 5.0 Deg.

JSI GRIP= 0.73 (P) (INPUT = 0.90)
JSI METAL= 0.69 (N) (INPUT = 1.00)

JOB NAME	TRUSS NAME	QUANTITY	PLY	JOB DESC.	DRWG NO.
313989	H02		1	TRUSS DESC. JT-39002	E-19112488

Alpa Roof Truss, Maple

Version 8.300 S Aug 9 2019 MiTek Industries, Inc. Fri Nov 8 11:48:36 2019 Page 1

ID:VRLqmclDifIZCj2mk6F92VyQuye-jqA9rl7B4stlXVM?CcLGQCv1mlpUuJylD6w1NRyLGUP

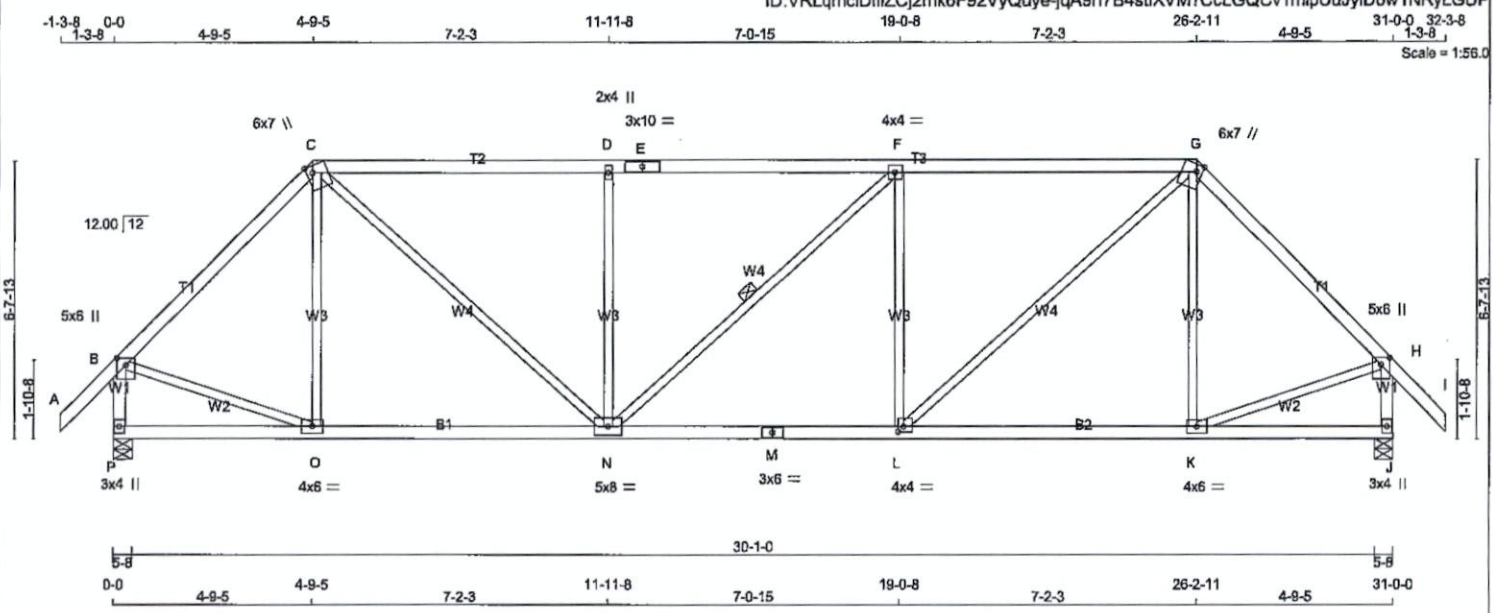

TOTAL WEIGHT = 2 X 133 = 266 lb

[M]

LUMBER

N. L. G. A. RULES

CHORDS	SIZE		LUMBER	DESCR.
A - C	2x4	DRY	No.2	SPF
C - E	2x4	DRY	1650F 1.5E	SPF
E - G	2x4	DRY	1650F 1.5E	SPF
G - I	2x4	DRY	No.2	SPF
P - B	2x4	DRY	No.2	SPF
J - H	2x4	DRY	No.2	SPF
P - M	2x4	DRY	No.2	SPF
M - J	2x4	DRY	No.2	SPF
ALL WEBS EXCEPT	2x3	DRY	No.2	SPF

DRY: SEASONED LUMBER.

PLATES (table is in inches)

JT	TYPE	PLATES	W	LEN	Y	X
B	TMVW+p	MT20	5.0	6.0	2.00	2.50
C	TTWW+m	MT20	6.0	7.0	Edge	1.75
D	TMW+w	MT20	2.0	4.0		
E	TS-t	MT20	3.0	10.0		
F	TMWW-t	MT20	4.0	4.0		
G	TTWW+m	MT20	6.0	7.0	Edge	1.75
H	TMVW+p	MT20	5.0	6.0	2.00	2.50
J	BMV1+p	MT20	3.0	4.0		
K	BMWW-t	MT20	4.0	6.0		
L	BMWW-t	MT20	4.0	4.0	1.50	1.50
M	BS-t	MT20	3.0	6.0		
N	BMWWW-t	MT20	5.0	8.0		
O	BMWW-t	MT20	4.0	6.0		
P	BMV1+p	MT20	3.0	4.0		

Edge - INDICATES REFERENCE CORNER OF PLATE TOUCHES EDGE OF CHORD.

NOTE: Lateral brace(s) shown shall be 2x4 SPF #2

LICENSED PROFESSIONAL ENGINEER
11/08/2019
R. TURENNE
100157040
PROVINCE OF ONTARIO

DIMENSIONS, SUPPORTS AND LOADINGS SPECIFIED BY FABRICATOR TO BE VERIFIED BY BUILDING DESIGNER

BEARINGS

JT	FACTORED GROSS REACTION VERT	HORZ	MAXIMUM FACTORED GROSS REACTION DOWN	HORZ	UPLIFT	INPUT BRG IN-SX	REQRD BRG IN-SX
P	1720	0	1720	0	0	5-8	2-9
J	1720	0	1720	0	0	5-8	2-9

UNFACTORED REACTIONS

JT	1ST LCASE COMBINED	MAX./MIN. COMPONENT REACTIONS SNOW	LIVE	PERM.LIVE	WIND	DEAD	SOIL
P	1219	787 / 0	0 / 0	0 / 0	0 / 0	432 / 0	0 / 0
J	1219	787 / 0	0 / 0	0 / 0	0 / 0	432 / 0	0 / 0

BEARING MATERIAL TO BE SPF NO.2 OR BETTER AT JOINT(S) P, J

BRACING

TOP CHORD TO BE SHEATHED OR MAX. PURLIN SPACING = 4.69 FT.
MAX. UNBRACED BOTTOM CHORD LENGTH = 10.00 FT OR RIGID CEILING DIRECTLY APPLIED.

ALL PITCH BREAKS AND PERIMETER CORNER JOINTS MUST BE LATERALLY RESTRAINED.

1 LATERAL BRACE(S) AT 1/ 2 LENGTH OF F-N.

END VERTICAL(S) MUST BE SHEATHED OR HAVE BRACES AS INDICATED IN THE MAX. UNBRACED LENGTH COLUMN OF THE TABLE BELOW

LOADING

TOTAL LOAD CASES: (4)

CHORDS MEMB. FR-TO	MAX. FACTORED FORCE (LBS)	FACTORED VERT. LOAD (PLF) FROM	TO	LC1	MAX CSI (LC)	MAX. UNBRAC LENGTH	WEBS MEMB. FR-TO	MAX. FACTORED FORCE (LBS)	MAX CSI (LC)
A- B	0 / 42	-84.9	-84.9		0.12 (1)	10.00	O- C	-199 / 18	0.15 (1)
B- C	-1472 / 0	-84.9	-84.9		0.42 (1)	4.93	C- N	0 / 1190	0.27 (1)
C- D	-1927 / 0	-84.9	-84.9		0.60 (1)	4.70	N- D	-655 / 0	0.48 (1)
D- E	-1927 / 0	-84.9	-84.9		0.60 (1)	4.69	N- F	-1 / 0	0.00 (1)
E- F	-1927 / 0	-84.9	-84.9		0.60 (1)	4.69	L- F	-656 / 0	0.48 (1)
F- G	-1928 / 0	-84.9	-84.9		0.61 (1)	4.69	L- G	0 / 1191	0.27 (1)
G- H	-1472 / 0	-84.9	-84.9		0.42 (1)	4.93	K- G	-200 / 18	0.15 (1)
H- I	0 / 42	-84.9	-84.9		0.12 (1)	10.00	B- O	0 / 1087	0.24 (1)
P- B	-1689 / 0	0.0	0.0		0.19 (1)	6.39	K- H	0 / 1087	0.24 (1)
J- H	-1689 / 0	0.0	0.0		0.19 (1)	6.39			
P- O	0 / 0	-18.5	-18.5		0.16 (4)	10.00			
O- N	0 / 1035	-18.5	-18.5		0.27 (4)	10.00			
N- M	0 / 1928	-18.5	-18.5		0.41 (1)	10.00			
M- L	0 / 1928	-18.5	-18.5		0.41 (1)	10.00			
L- K	0 / 1034	-18.5	-18.5		0.27 (4)	10.00			
K- J	0 / 0	-18.5	-18.5		0.16 (4)	10.00			

DESIGN CRITERIA

SPECIFIED LOADS:

TOP CH.	LL	=	23.3	PSF
	DL	=	6.0	PSF
BOT CH.	LL	=	0.0	PSF
	DL	=	7.4	PSF
TOTAL LOAD		=	36.7	PSF

SPACING = 24.0 IN. C/C

LOADING IN FLAT SECTION BASED ON A SLOPE OF 2.00/12 MINIMUM

THIS TRUSS IS DESIGNED FOR RESIDENTIAL OR SMALL BUILDING REQUIREMENTS OF PART 9, NBCC 2010, NBCC 2015

THIS DESIGN COMPLIES WITH:
- PART 9 OF BCBC 2018 , OBC 2012 , ABC 2019
- CSA 086-09, CSA 086-14
- TPIC 2011, TPIC 2014

(55 % OF 27.2 P.S.F. G.S.L. PLUS 8.4 P.S.F. RAIN LOAD) EQUALS 23.3 P.S.F. SPECIFIED ROOF LIVE LOAD

ALLOWABLE DEFL.(LL)= L/360 (1.03")
CALCULATED VERT. DEFL.(LL) = L/ 999 (0.08")
ALLOWABLE DEFL.(TL)= L/360 (1.03")
CALCULATED VERT. DEFL.(TL) = L/ 999 (0.17")

CSI: TC=0.61/1.00 (F-G:1) , BC=0.41/1.00 (L-N:1) , WB=0.48/1.00 (F-L:1) , SSI=0.28/1.00 (F-G:1)

DOL LUMBER=1.00 NAIL=1.00 LS BEND=1.10 COMP=1.10 SHEAR=1.10 TENS= 1.10

COMPANION LIVE LOAD FACTOR = 1.00

TRUSS PLATE MANUFACTURER IS NOT RESPONSIBLE FOR QUALITY CONTROL IN THE TRUSS MANUFACTURING PLANT .

NAIL VALUES

PLATE	GRIP(DRY) (PSI) MAX	MIN	SHEAR (PLI) MAX	MIN	SECTION (PLI) MAX	MIN
MT20	618	354	1667	788	1987	1656

PLATE PLACEMENT TOL. = 0.250 inches

PLATE ROTATION TOL. = 5.0 Deg.

JSI GRIP= 0.71 (P) (INPUT = 0.90)
JSI METAL= 0.66 (M) (INPUT = 1.00)

JOB NAME	TRUSS NAME	QUANTITY	PLY	JOB DESC.	DRWG NO.
313989	H03	1	1	TRUSS DESC. JT-39002	E-19112489

Alpa Roof Truss, Maple

Version 8.300 S Aug 9 2019 MiTek Industries, Inc. Fri Nov 8 11:48:37 2019 Page 1
ID:VRLqmclDifiZC|2mk6F92VyQuye-B0kX3e7prA?99fxBmKsVyPRDN8A_dj6uSmgbwtyLGUO

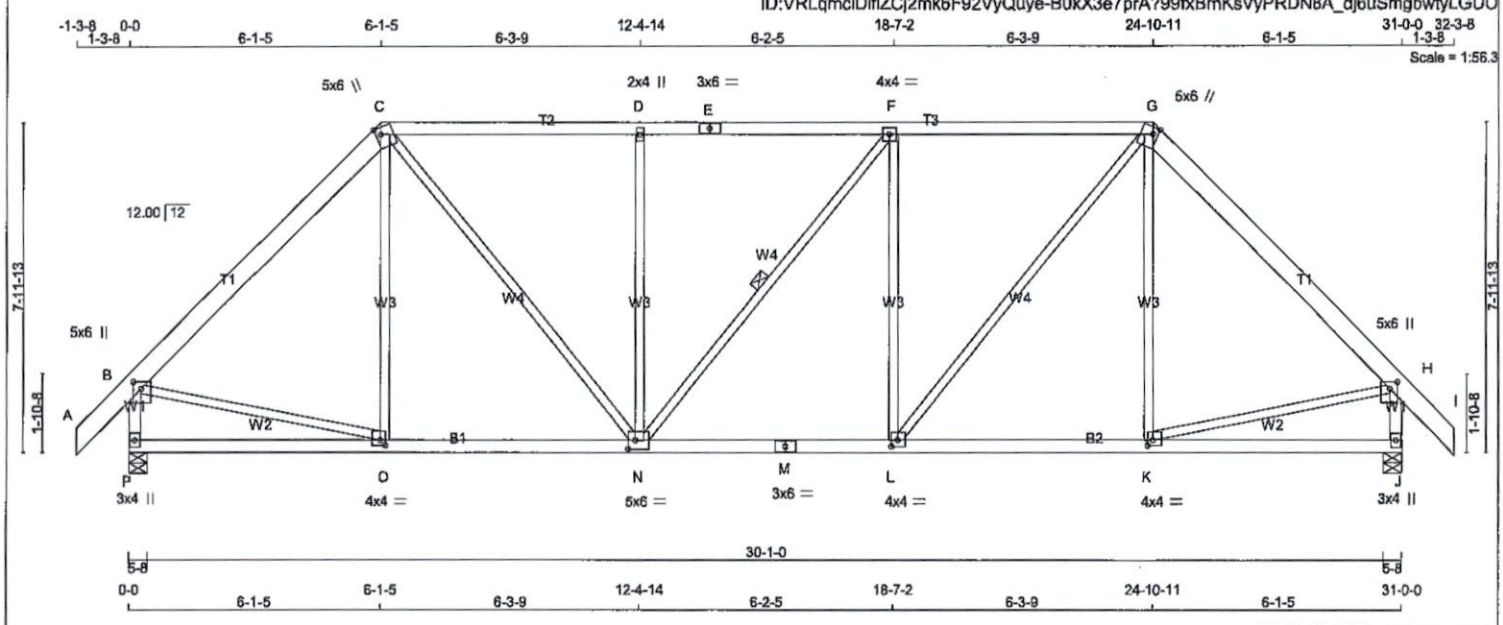

TOTAL WEIGHT = 2 X 156 = 312 lb [M]

LUMBER

N. L. G. A. RULES

CHORDS	SIZE		LUMBER	DESCR.
A - C	2x6	DRY	No.2	SPF
C - E	2x4	DRY	No.2	SPF
E - G	2x4	DRY	No.2	SPF
G - I	2x6	DRY	No.2	SPF
P - B	2x4	DRY	No.2	SPF
J - H	2x4	DRY	No.2	SPF
P - M	2x4	DRY	No.2	SPF
M - J	2x4	DRY	No.2	SPF
ALL WEBS EXCEPT	2x3	DRY	No.2	SPF

DRY: SEASONED LUMBER.

PLATES (table is in inches)

JT	TYPE	PLATES	W	LEN	Y	X
B	TMVW+p	MT20	5.0	6.0	2.00	2.25
C	TTWW+m	MT20	5.0	6.0	2.00	1.50
D	TMW+w	MT20	2.0	4.0		
E	TS-t	MT20	3.0	6.0		
F	TMWW-t	MT20	4.0	4.0		
G	TTWW+m	MT20	5.0	6.0	2.00	1.50
H	TMVW+p	MT20	5.0	6.0	2.00	2.25
J	BMV1+p	MT20	3.0	4.0		
K	BMWW-t	MT20	4.0	4.0	1.50	1.50
L	BMWW-t	MT20	4.0	4.0	1.75	1.75
M	BS-t	MT20	3.0	6.0		
N	BMWWW-t	MT20	5.0	6.0	2.50	2.00
O	BMWW-t	MT20	4.0	4.0	1.50	1.50
P	BMV1+p	MT20	3.0	4.0		

NOTE: Lateral brace(s) shown shall be 2x4 SPF #2

LICENSED PROFESSIONAL ENGINEER
11/08/2019
R. TURENNE
100157040
PROVINCE OF ONTARIO

DIMENSIONS, SUPPORTS AND LOADINGS SPECIFIED BY FABRICATOR TO BE VERIFIED BY BUILDING DESIGNER

BEARINGS

JT	FACTORED GROSS REACTION VERT	HORZ	MAXIMUM FACTORED GROSS REACTION DOWN	HORZ	UPLIFT	INPUT BRG IN-SX	REQRD BRG IN-SX
P	1725	0	1725	0	0	5-8	2-9
J	1725	0	1725	0	0	5-8	2-9

UNFACTORED REACTIONS

JT	1ST LCASE COMBINED	MAX./MIN. COMPONENT REACTIONS SNOW	LIVE	PERM.LIVE	WIND	DEAD	SOIL
P	1222	790 / 0	0 / 0	0 / 0	0 / 0	433 / 0	0 / 0
J	1222	790 / 0	0 / 0	0 / 0	0 / 0	433 / 0	0 / 0

BEARING MATERIAL TO BE SPF NO.2 OR BETTER AT JOINT(S) P, J

BRACING

TOP CHORD TO BE SHEATHED OR MAX. PURLIN SPACING = 4.56 FT.
MAX. UNBRACED BOTTOM CHORD LENGTH = 10.00 FT OR RIGID CEILING DIRECTLY APPLIED.

ALL PITCH BREAKS AND PERIMETER CORNER JOINTS MUST BE LATERALLY RESTRAINED.

1 LATERAL BRACE(S) AT 1/ 2 LENGTH OF F-N.

END VERTICAL(S) MUST BE SHEATHED OR HAVE BRACES AS INDICATED IN THE MAX. UNBRACED LENGTH COLUMN OF THE TABLE BELOW

LOADING

TOTAL LOAD CASES: (4)

CHORDS

MEMB. FR-TO	MAX. FACTORED FORCE (LBS)	FACTORED VERT. LOAD (PLF) FROM	TO	LC1	MAX CSI (LC)	MAX. UNBRAC LENGTH
A- B	0 / 44	-84.9	-84.9	0.07	(1)	10.00
B- C	-1490 / 0	-84.9	-84.9	0.30	(1)	6.01
C- D	-1597 / 0	-84.9	-84.9	0.55	(1)	4.57
D- E	-1597 / 0	-84.9	-84.9	0.55	(1)	4.56
E- F	-1597 / 0	-84.9	-84.9	0.55	(1)	4.56
F- G	-1598 / 0	-84.9	-84.9	0.55	(1)	4.56
G- H	-1490 / 0	-84.9	-84.9	0.30	(1)	6.01
H- I	0 / 44	-84.9	-84.9	0.07	(1)	10.00
P- B	-1680 / 0	0.0	0.0	0.18	(1)	6.41
J- H	-1680 / 0	0.0	0.0	0.18	(1)	6.41
P- O	0 / 0	-18.5	-18.5	0.17	(4)	10.00
O- N	0 / 1044	-18.5	-18.5	0.27	(1)	10.00
N- M	0 / 1599	-18.5	-18.5	0.33	(1)	10.00
M- L	0 / 1599	-18.5	-18.5	0.33	(1)	10.00
L- K	0 / 1044	-18.5	-18.5	0.27	(4)	10.00
K- J	0 / 0	-18.5	-18.5	0.17	(4)	10.00

WEBS

MEMB. FR-TO	MAX. FACTORED FORCE (LBS)	MAX CSI (LC)
O- C	-105 / 58	0.13 (1)
C- N	0 / 867	0.20 (1)
N- D	-557 / 0	0.68 (1)
N- F	-2 / 0	0.00 (1)
L- F	-558 / 0	0.68 (1)
L- G	0 / 869	0.20 (1)
K- G	-106 / 58	0.13 (1)
B- O	0 / 1072	0.24 (1)
K- H	0 / 1072	0.24 (1)

DESIGN CRITERIA

SPECIFIED LOADS:

TOP CH.	LL	=	23.3	PSF
	DL	=	6.0	PSF
BOT CH.	LL	=	0.0	PSF
	DL	=	7.4	PSF
TOTAL LOAD		=	36.7	PSF

SPACING = 24.0 IN. C/C

LOADING IN FLAT SECTION BASED ON A SLOPE OF 2.00/12 MINIMUM

THIS TRUSS IS DESIGNED FOR RESIDENTIAL OR SMALL BUILDING REQUIREMENTS OF PART 9, NBCC 2010, NBCC 2015

THIS DESIGN COMPLIES WITH:
- PART 9 OF BCBC 2018 , OBC 2012 , ABC 2019
- CSA 086-09, CSA 086-14
- TPIC 2011, TPIC 2014

(55 % OF 27.2 P.S.F. G.S.L. PLUS 8.4 P.S.F. RAIN LOAD) EQUALS 23.3 P.S.F. SPECIFIED ROOF LIVE LOAD

ALLOWABLE DEFL.(LL)= L/360 (1.03")
CALCULATED VERT. DEFL.(LL) = L/ 999 (0.06")
ALLOWABLE DEFL.(TL)= L/360 (1.03")
CALCULATED VERT. DEFL.(TL) = L/ 999 (0.13")

CSI: TC=0.55/1.00 (F-G:1) , BC=0.33/1.00 (L-N:1) , WB=0.68/1.00 (F-L:1) , SSI=0.25/1.00 (F-G:1)

DOL LUMBER=1.00 NAIL=1.00 LS BEND=1.10 COMP=1.10 SHEAR=1.10 TENS= 1.10

COMPANION LIVE LOAD FACTOR = 1.00

TRUSS PLATE MANUFACTURER IS NOT RESPONSIBLE FOR QUALITY CONTROL IN THE TRUSS MANUFACTURING PLANT .

NAIL VALUES

PLATE	GRIP(DRY) (PSI) MAX	MIN	SHEAR (PLI) MAX	MIN	SECTION (PLI) MAX	MIN
MT20	618	354	1667	788	1987	1656

PLATE PLACEMENT TOL. = 0.250 inches

PLATE ROTATION TOL. = 5.0 Deg.

JSI GRIP= 0.71 (B) (INPUT = 0.90)
JSI METAL= 0.55 (M) (INPUT = 1.00)

JOB NAME	TRUSS NAME	QUANTITY	PLY	JOB DESC.	DRWG NO.
313989	H04	1	1	TRUSS DESC. JT-39002	E-19112490

Alpa Roof Truss, Maple

Version 8.300 S Aug 9 2019 MiTek Industries, Inc. Fri Nov 8 11:48:39 2019 Page 1

ID:VRLqmcIDiflZCj2mk6F92VyQuye-7OsHUK94NnFtOz5aulvz1qXXWyr25aBBv49h_myLGUM

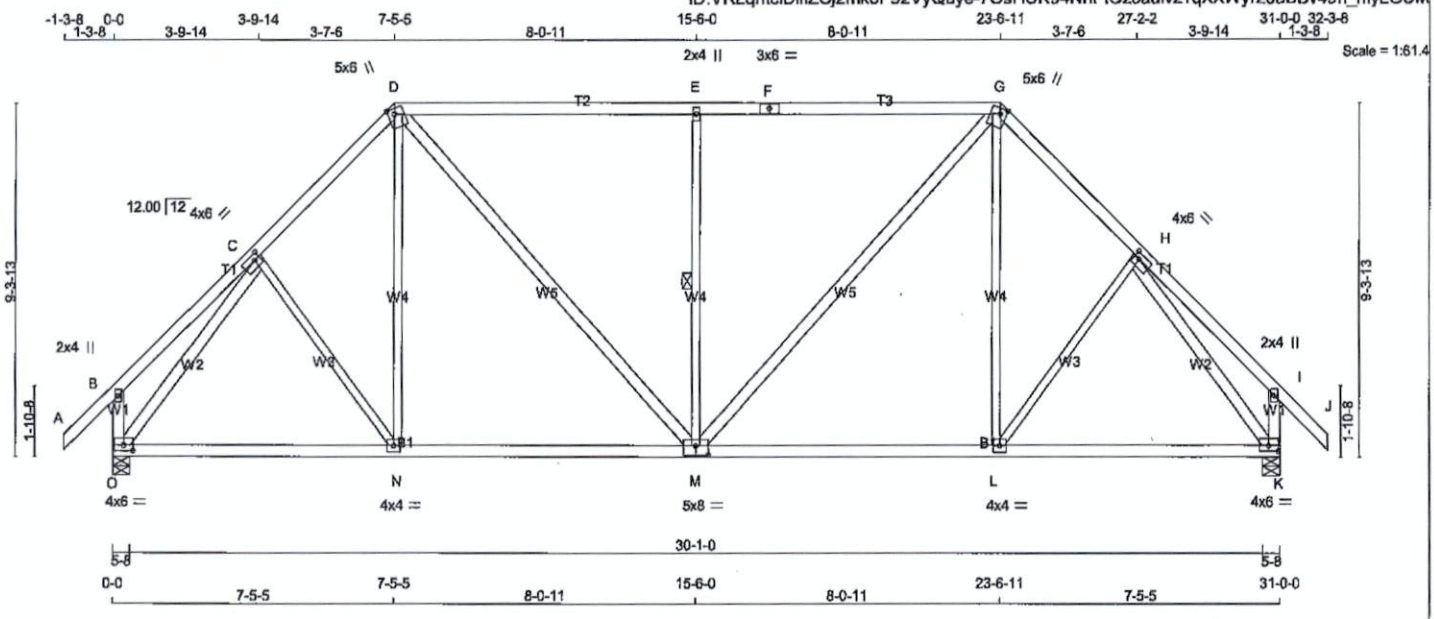

TOTAL WEIGHT = 2 X 158 = 315 lb

[M]

LUMBER

N. L. G. A. RULES

CHORDS	SIZE		LUMBER	DESCR.
A - D	2x4	DRY	No.2	SPF
D - F	2x4	DRY	2100F 1.8E	SPF
F - G	2x4	DRY	2100F 1.8E	SPF
G - J	2x4	DRY	No.2	SPF
O - B	2x4	DRY	No.2	SPF
K - I	2x4	DRY	No.2	SPF
O - M	2x4	DRY	No.2	SPF
M - K	2x4	DRY	No.2	SPF
ALL WEBS EXCEPT	2x4	DRY	No.2	SPF
C - N	2x3	DRY	No.2	SPF
N - D	2x3	DRY	No.2	SPF
M - E	2x3	DRY	No.2	SPF
L - G	2x3	DRY	No.2	SPF
L - H	2x3	DRY	No.2	SPF

DRY: SEASONED LUMBER.

PLATES (table is in inches)

JT	TYPE	PLATES	W	LEN	Y	X
B	TMV+p	MT20	2.0	4.0		
C	TMWW-t	MT20	4.0	6.0	1.75	1.75
D	TTWW+m	MT20	5.0	6.0	1.75	2.00
E	TMW+w	MT20	2.0	4.0		
F	TS-t	MT20	3.0	6.0		
G	TTWW+m	MT20	5.0	6.0	1.75	2.00
H	TMWW-t	MT20	4.0	6.0	1.75	1.75
I	TMV+p	MT20	2.0	4.0		
K	BMVW1-t	MT20	4.0	6.0	1.75	3.00
L	BMWW-t	MT20	4.0	4.0		
M	BSWWW-l	MT20	5.0	8.0	3.00	4.00
N	BMWW-t	MT20	4.0	4.0		
O	BMVW1-t	MT20	4.0	6.0	1.75	3.00

NOTE: Lateral brace(s) shown shall be 2x4 SPF #2

DIMENSIONS, SUPPORTS AND LOADINGS SPECIFIED BY FABRICATOR TO BE VERIFIED BY BUILDING DESIGNER

BEARINGS

JT	FACTORED GROSS REACTION VERT	HORZ	MAXIMUM FACTORED GROSS REACTION DOWN	HORZ	UPLIFT	INPUT BRG IN-SX	REQRD BRG IN-SX
O	1720	0	1720	0	0	5-8	1-14
K	1720	0	1720	0	0	5-8	1-14

UNFACTORED REACTIONS

JT	1ST LCASE COMBINED	MAX./MIN. COMPONENT REACTIONS SNOW	LIVE	PERM.LIVE	WIND	DEAD	SOIL
O	1219	787 / 0	0 / 0	0 / 0	0 / 0	432 / 0	0 / 0
K	1219	787 / 0	0 / 0	0 / 0	0 / 0	432 / 0	0 / 0

BEARING MATERIAL TO BE SPF NO.2 OR BETTER AT JOINT(S) O, K

BRACING

TOP CHORD TO BE SHEATHED OR MAX. PURLIN SPACING = 5.16 FT.
MAX. UNBRACED BOTTOM CHORD LENGTH = 10.00 FT OR RIGID CEILING DIRECTLY APPLIED.

ALL PITCH BREAKS AND PERIMETER CORNER JOINTS MUST BE LATERALLY RESTRAINED.

1 LATERAL BRACE(S) AT 1/ 2 LENGTH OF E-M.

END VERTICAL(S) MUST BE SHEATHED OR HAVE BRACES AS INDICATED IN THE MAX. UNBRACED LENGTH COLUMN OF THE TABLE BELOW

LOADING

TOTAL LOAD CASES: (4)

CHORDS MEMB. FR-TO	MAX. FACTORED FORCE (LBS)	FACTORED VERT. LOAD (PLF) FROM	TO	LC1	MAX CSI (LC)	MAX. UNBRAC LENGTH	WEBS MEMB. FR-TO	MAX. FACTORED FORCE (LBS)	MAX CSI (LC)
A- B	0 / 42	-84.9	-84.9	0.12 (1)	10.00		C- N	0 / 49	0.02 (4)
B- C	0 / 26	-84.9	-84.9	0.18 (1)	10.00		N- D	0 / 164	0.06 (4)
C- D	-1475 / 0	-84.9	-84.9	0.23 (1)	5.16		D- M	0 / 640	0.10 (1)
D- E	-1450 / 0	-84.9	-84.9	0.70 (1)	5.31		M- E	-840 / 0	0.48 (1)
E- F	-1451 / 0	-84.9	-84.9	0.70 (1)	5.31		M- G	0 / 640	0.10 (1)
F- G	-1451 / 0	-84.9	-84.9	0.70 (1)	5.31		L- G	0 / 164	0.06 (4)
G- H	-1475 / 0	-84.9	-84.9	0.23 (1)	5.16		L- H	0 / 49	0.02 (4)
H- I	0 / 26	-84.9	-84.9	0.18 (1)	10.00		O- C	-1752 / 0	0.90 (1)
I- J	0 / 42	-84.9	-84.9	0.12 (1)	10.00		H- K	-1752 / 0	0.90 (1)
O- B	-238 / 0	0.0	0.0	0.03 (1)	7.81				
K- I	-238 / 0	0.0	0.0	0.03 (1)	7.81				
O- N	0 / 1011	-18.5	-18.5	0.41 (4)	10.00				
N- M	0 / 1023	-18.5	-18.5	0.42 (4)	10.00				
M- L	0 / 1023	-18.5	-18.5	0.42 (4)	10.00				
L- K	0 / 1011	-18.5	-18.5	0.41 (4)	10.00				

DESIGN CRITERIA

SPECIFIED LOADS:

TOP CH.	LL	=	23.3	PSF
	DL	=	6.0	PSF
BOT CH.	LL	=	0.0	PSF
	DL	=	7.4	PSF
TOTAL LOAD		=	36.7	PSF

SPACING = 24.0 IN. C/C

LOADING IN FLAT SECTION BASED ON A SLOPE OF 2.00/12 MINIMUM

THIS TRUSS IS DESIGNED FOR RESIDENTIAL OR SMALL BUILDING REQUIREMENTS OF PART 9, NBCC 2010, NBCC 2015

THIS DESIGN COMPLIES WITH:
- PART 9 OF BCBC 2018 , OBC 2012 , ABC 2019
- CSA 086-09, CSA 086-14
- TPIC 2011, TPIC 2014

(55 % OF 27.2 P.S.F. G.S.L. PLUS 8.4 P.S.F. RAIN LOAD) EQUALS 23.3 P.S.F. SPECIFIED ROOF LIVE LOAD

ALLOWABLE DEFL.(LL)= L/360 (1.03")
CALCULATED VERT. DEFL.(LL) = L/ 999 (0.06")
ALLOWABLE DEFL.(TL)= L/360 (1.03")
CALCULATED VERT. DEFL.(TL) = L/ 999 (0.16")

CSI: TC=0.70/1.00 (E-G:1) , BC=0.42/1.00 (L-M:4) , WB=0.90/1.00 (H-K:1) , SSI=0.33/1.00 (D-E:1)

DOL LUMBER=1.00 NAIL=1.00 LS BEND=1.10 COMP=1.10 SHEAR=1.10 TENS= 1.10

COMPANION LIVE LOAD FACTOR = 1.00

AUTOSOLVE HEELS OFF

TRUSS PLATE MANUFACTURER IS NOT RESPONSIBLE FOR QUALITY CONTROL IN THE TRUSS MANUFACTURING PLANT .

NAIL VALUES

PLATE	GRIP(DRY) (PSI) MAX	MIN	SHEAR (PLI) MAX	MIN	SECTION (PLI) MAX	MIN
MT20	618	354	1667	788	1987	1656

PLATE PLACEMENT TOL. = 0.250 inches

PLATE ROTATION TOL. = 5.0 Deg.

JSI GRIP= 0.71 (O) (INPUT = 0.90)
JSI METAL= 0.43 (H) (INPUT = 1.00)

JOB NAME	TRUSS NAME	QUANTITY	PLY	JOB DESC.	DRWG NO.
313989	H05		1	TRUSS DESC. JT-39002	E-19112491

Alpa Roof Truss, Maple

Version 8.300 S Aug 9 2019 MiTek Industries, Inc. Fri Nov 8 11:48:40 2019 Page 1

ID:VRLqmclDiflZCj2mk6F92VyQuye-bbQfhfAi85Nk07gmRSQCa23jKMAoq7HL8kuFWCyLGUL

Scale = 1:68.2

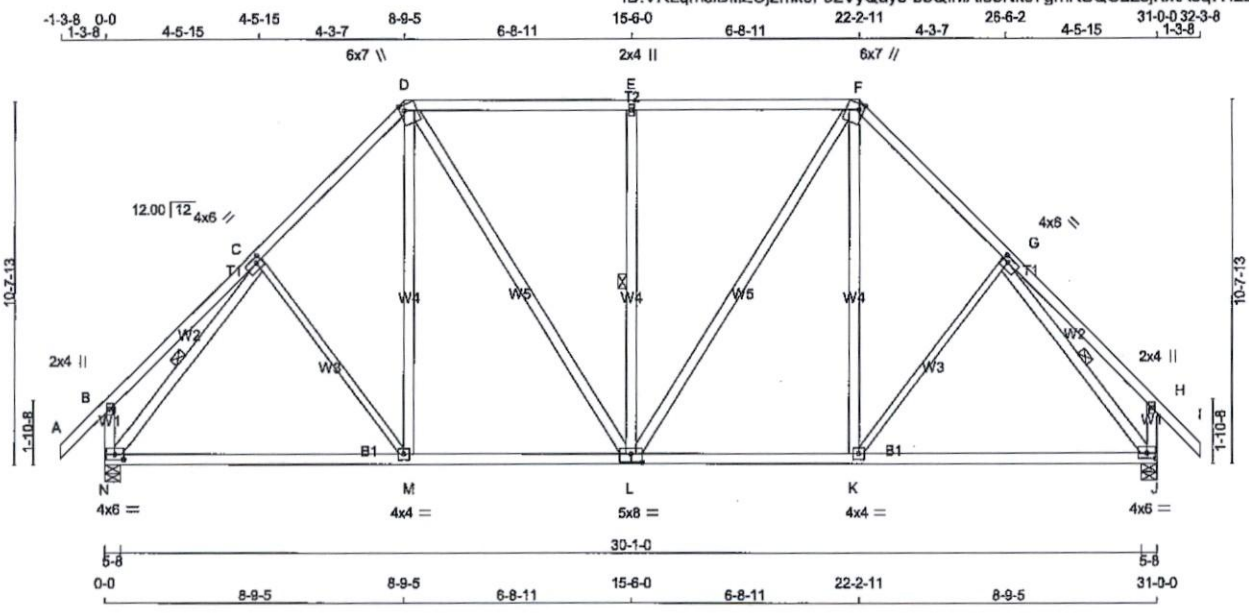

TOTAL WEIGHT = 9 X 176 = 1585 lb

[M][F]

LUMBER

N. L. G. A. RULES

CHORDS	SIZE		LUMBER	DESCR.
A - D	2x4	DRY	No.2	SPF
D - F	2x4	DRY	No.2	SPF
F - I	2x4	DRY	No.2	SPF
N - B	2x4	DRY	No.2	SPF
J - H	2x4	DRY	No.2	SPF
N - L	2x4	DRY	No.2	SPF
L - J	2x4	DRY	No.2	SPF
ALL WEBS	2x4	DRY	No.2	SPF
EXCEPT				
C - M	2x3	DRY	No.2	SPF
K - G	2x3	DRY	No.2	SPF

DRY: SEASONED LUMBER.

PLATES (table is in inches)

JT	TYPE	PLATES	W	LEN	Y	X
B	TMV+p	MT20	2.0	4.0		
C	TMWW-t	MT20	4.0	6.0	1.75	2.00
D	TTWW+m	MT20	6.0	7.0	Edge	1.75
E	TMW+w	MT20	2.0	4.0		
F	TTWW+m	MT20	6.0	7.0	Edge	1.75
G	TMWW-t	MT20	4.0	6.0	1.75	2.00
H	TMV+p	MT20	2.0	4.0		
J	BMVW1-t	MT20	4.0	6.0	1.75	3.00
K	BMWW-t	MT20	4.0	4.0		
L	BSWWW-t	MT20	5.0	8.0	3.00	4.00
M	BMWW-t	MT20	4.0	4.0		
N	BMVW1-t	MT20	4.0	6.0	1.75	3.00

Edge - INDICATES REFERENCE CORNER OF PLATE TOUCHES EDGE OF CHORD.

NOTE: Lateral brace(s) shown shall be 2x4 SPF #2

LICENSED PROFESSIONAL ENGINEER
11/08/2019
R. TURENNE
100157040
PROVINCE OF ONTARIO

DIMENSIONS, SUPPORTS AND LOADINGS SPECIFIED BY FABRICATOR TO BE VERIFIED BY BUILDING DESIGNER

BEARINGS

JT	FACTORED GROSS REACTION VERT	HORZ	MAXIMUM FACTORED GROSS REACTION DOWN	HORZ	UPLIFT	INPUT BRG IN-SX	REQRD BRG IN-SX
N	1771	0	1771	0	0	5-8	1-15
J	1771	0	1771	0	0	5-8	1-15

UNFACTORED REACTIONS

JT	1ST LCASE COMBINED	MAX./MIN. COMPONENT REACTIONS SNOW	LIVE	PERM.LIVE	WIND	DEAD	SOIL
N	1259	787 / 0	0 / 0	0 / 0	0 / 0	472 / 0	0 / 0
J	1259	787 / 0	0 / 0	0 / 0	0 / 0	472 / 0	0 / 0

BEARING MATERIAL TO BE SPF NO.2 OR BETTER AT JOINT(S) N, J

BRACING

FOR SECTION D-F, MAX. PURLIN SPACING = 2.00 FT.
FOR OTHER SECTIONS, TOP CHORD TO BE SHEATHED OR MAX. PURLIN SPACING = 5.14 FT.
MAX. UNBRACED BOTTOM CHORD LENGTH = 10.00 FT OR RIGID CEILING DIRECTLY APPLIED.

ALL PITCH BREAKS AND PERIMETER CORNER JOINTS MUST BE LATERALLY RESTRAINED.

1 LATERAL BRACE(S) AT 1/ 2 LENGTH OF E-L, C-N, G-J.

END VERTICAL(S) MUST BE SHEATHED OR HAVE BRACES AS INDICATED IN THE MAX. UNBRACED LENGTH COLUMN OF THE TABLE BELOW

LOADING

TOTAL LOAD CASES: (4)

CHORDS

MEMB. FR-TO	MAX. FACTORED FORCE (LBS)	FACTORED VERT. LOAD LC1 (PLF) FROM	TO	MAX CSI (LC)	MAX. UNBRAC LENGTH
A- B	0 / 42	-84.9	-84.9	0.12 (1)	10.00
B- C	0 / 31	-84.9	-84.9	0.27 (1)	10.00
C- D	-1493 / 0	-84.9	-84.9	0.24 (1)	5.14
D- E	-1307 / 0	-92.4	-92.4	0.57 (1)	2.00
E- F	-1307 / 0	-92.4	-92.4	0.57 (1)	2.00
F- G	-1493 / 0	-84.9	-84.9	0.24 (1)	5.14
G- H	0 / 31	-84.9	-84.9	0.27 (1)	10.00
H- I	0 / 42	-84.9	-84.9	0.12 (1)	10.00
N- B	-258 / 0	0.0	0.0	0.03 (1)	7.81
J- H	-258 / 0	0.0	0.0	0.03 (1)	7.81
N- M	0 / 1070	-18.5	-18.5	0.44 (4)	10.00
M- L	0 / 1034	-18.5	-18.5	0.45 (4)	10.00
L- K	0 / 1034	-18.5	-18.5	0.45 (4)	10.00
K- J	0 / 1070	-18.5	-18.5	0.44 (4)	10.00

WEBS

MEMB. FR-TO	MAX. FACTORED FORCE (LBS)	MAX CSI (LC)
C- M	-65 / 33	0.07 (1)
M- D	0 / 232	0.04 (4)
D- L	0 / 501	0.08 (1)
L- E	-762 / 0	0.43 (1)
L- F	0 / 501	0.08 (1)
K- F	0 / 232	0.04 (4)
K- G	-65 / 33	0.07 (1)
N- C	-1799 / 0	0.46 (1)
G- J	-1799 / 0	0.46 (1)

DESIGN CRITERIA

SPECIFIED LOADS:

TOP CH.	LL =	23.3	PSF
	DL =	6.0	PSF
BOT CH.	LL =	0.0	PSF
	DL =	7.4	PSF
TOTAL LOAD	=	36.7	PSF

SPACING = 24.0 IN. C/C

LOADING IN FLAT SECTION BASED ON PIGGYBACK TRUSS WITH SLOPES OF 6.00/12 AND -6.00/12 AND RESPECTIVE WALL HEIGHTS OF 0-0 AND 0-0 AND AN ADDITIONAL DEAD LOAD OF 3.0 P.S.F.

THIS TRUSS IS DESIGNED FOR RESIDENTIAL OR SMALL BUILDING REQUIREMENTS OF PART 9, NBCC 2010, NBCC 2015

THIS DESIGN COMPLIES WITH:
- PART 9 OF BCBC 2018 , OBC 2012 , ABC 2019
- CSA 086-09, CSA 086-14
- TPIC 2011, TPIC 2014

(55 % OF 27.2 P.S.F. G.S.L. PLUS 8.4 P.S.F. RAIN LOAD) EQUALS 23.3 P.S.F. SPECIFIED ROOF LIVE LOAD

ALLOWABLE DEFL.(LL)= L/360 (1.03")
CALCULATED VERT. DEFL.(LL) = L/ 999 (0.04")
ALLOWABLE DEFL.(TL)= L/360 (1.03")
CALCULATED VERT. DEFL.(TL) = L/ 999 (0.19")

CSI: TC=0.57/1.00 (D-E:1) , BC=0.45/1.00 (K-L:4) , WB=0.46/1.00 (C-N:1) , SSI=0.30/1.00 (E-F:1)

DOL LUMBER=1.00 NAIL=1.00 LS BEND=1.10 COMP=1.10 SHEAR=1.10 TENS= 1.10

COMPANION LIVE LOAD FACTOR = 1.00

AUTOSOLVE HEELS OFF

TRUSS PLATE MANUFACTURER IS NOT RESPONSIBLE FOR QUALITY CONTROL IN THE TRUSS MANUFACTURING PLANT .

NAIL VALUES

PLATE	GRIP(DRY) (PSI) MAX	MIN	SHEAR (PLI) MAX	MIN	SECTION (PLI) MAX	MIN
MT20	618	354	1667	788	1987	1656

PLATE PLACEMENT TOL. = 0.250 inches

PLATE ROTATION TOL. = 5.0 Deg.

JSI GRIP= 0.73 (J) (INPUT = 0.90)
JSI METAL= 0.45 (C) (INPUT = 1.00)

JOB NAME	TRUSS NAME	QUANTITY	PLY	JOB DESC.	DRWG NO.
313989	H06P		1	TRUSS DESC. JT-39002	E-19112492

Alpa Roof Truss, Maple

Version 8.300 S Aug 9 2019 MiTek Industries, Inc. Fri Nov 8 11:48:42 2019 Page 1
ID:VRLqmclDiflZCj2mk6F92VyQuye-YzXQ6LBygidSFQq9ZtSgfT9879vvI5Yeb2NMb5yLGUJ

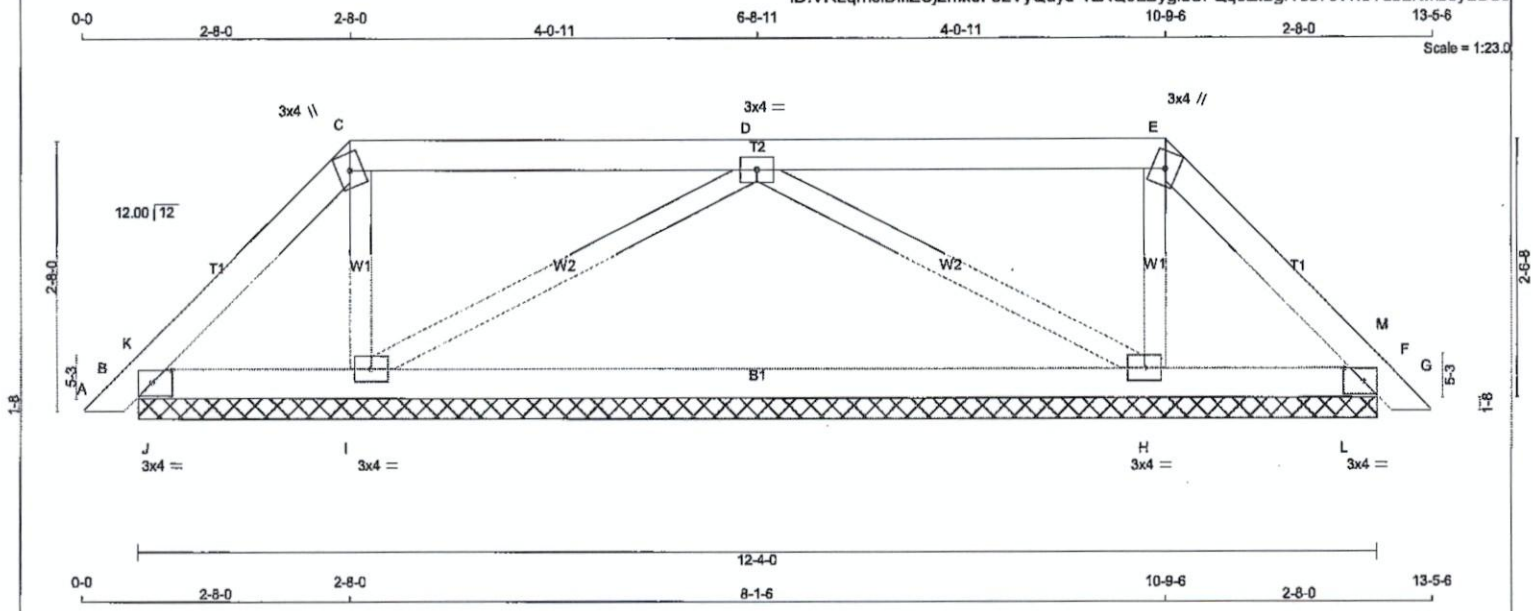

TOTAL WEIGHT = 2 X 42 = 84 lb

[M]

LUMBER

N. L. G. A. RULES

CHORDS	SIZE		LUMBER	DESCR.
A - C	2x4	DRY	No.2	SPF
C - E	2x4	DRY	No.2	SPF
E - G	2x4	DRY	No.2	SPF
B - F	2x4	DRY	No.2	SPF
ALL WEBS	2x3	DRY	No.2	SPF

DRY: SEASONED LUMBER.

PLATES (table is in inches)

JT	TYPE	PLATES	W	LEN	Y	X
B	TMB1-I	MT20	3.0	4.0	1.50	2.25
C	TTW+m	MT20	3.0	4.0		
D	TMWW-t	MT20	3.0	4.0		
E	TTW+m	MT20	3.0	4.0		
F	TMB1-I	MT20	3.0	4.0	1.50	2.25
H	BMWW1-t	MT20	3.0	4.0		
I	BMWW1-t	MT20	3.0	4.0		

NOTE: Lateral brace(s) shown shall be 2x4 SPF #2

LICENSED PROFESSIONAL ENGINEER
11/08/2019
R. TURENNE
100157040
PROVINCE OF ONTARIO

DIMENSIONS, SUPPORTS AND LOADINGS SPECIFIED BY FABRICATOR TO BE VERIFIED BY BUILDING DESIGNER

BEARINGS

JT	FACTORED GROSS REACTION VERT	HORZ	MAXIMUM FACTORED GROSS REACTION DOWN	HORZ	UPLIFT	INPUT BRG IN-SX	REQRD BRG IN-SX
B	76	0	76	0	-8	12-4-0	1-3-14
F	76	0	76	0	-8	12-4-0	1-3-14
I	599	0	599	0	0	12-4-0	1-3-14
H	599	0	599	0	0	12-4-0	1-3-14

PROVIDE ANCHORAGE AT BEARING JOINT B FOR 150 LBS FACTORED UPLIFT
PROVIDE ANCHORAGE AT BEARING JOINT F FOR 150 LBS FACTORED UPLIFT

UNFACTORED REACTIONS

JT	1ST LCASE COMBINED	MAX./MIN. COMPONENT REACTIONS SNOW	LIVE	PERM.LIVE	WIND	DEAD	SOIL
B	50	55 / 0	0 / 0	0 / 0	0 / 0	0 / -6	0 / 0
F	50	55 / 0	0 / 0	0 / 0	0 / 0	0 / -6	0 / 0
I	429	253 / 0	0 / 0	0 / 0	0 / 0	176 / 0	0 / 0
H	429	253 / 0	0 / 0	0 / 0	0 / 0	176 / 0	0 / 0

BEARING MATERIAL TO BE SPF NO.2 OR BETTER AT JOINT(S) B, F, I, H

BRACING

TOP CHORD TO BE SHEATHED OR MAX. PURLIN SPACING = 10.00 FT.
MAX. UNBRACED BOTTOM CHORD LENGTH = 6.25 FT OR RIGID CEILING DIRECTLY APPLIED.

ALL PITCH BREAKS AND PERIMETER CORNER JOINTS MUST BE LATERALLY RESTRAINED.

LOADING

TOTAL LOAD CASES: (4)

CHORDS

MEMB. FR-TO	MAX. FACTORED FORCE (LBS)	FACTORED VERT. LOAD LC1 (PLF) FROM	TO	MAX CSI (LC)	MAX. UNBRAC LENGTH
A- B	0 / 12	-84.9	-84.9	0.01 (1)	10.00
B- K	0 / 158	-84.9	-84.9	0.06 (1)	10.00
K- C	0 / 36	-84.9	-84.9	0.04 (1)	10.00
C- D	0 / 43	-84.9	-84.9	0.23 (1)	10.00
D- E	0 / 43	-84.9	-84.9	0.23 (1)	10.00
E- M	0 / 36	-84.9	-84.9	0.04 (1)	10.00
M- F	0 / 158	-84.9	-84.9	0.06 (1)	10.00
F- G	0 / 12	-84.9	-84.9	0.01 (1)	10.00
B- J	-32 / 0	-18.5	-18.5	0.06 (1)	6.25
J- I	-32 / 0	-18.5	-18.5	0.20 (4)	6.25
I- H	0 / 332	-18.5	-18.5	0.21 (4)	10.00
H- L	-32 / 0	-18.5	-18.5	0.20 (4)	6.25
L- F	-32 / 0	-18.5	-18.5	0.06 (1)	6.25

WEBS

MEMB. FR-TO	MAX. FACTORED FORCE (LBS)	MAX CSI (LC)
I- C	-231 / 0	0.04 (1)
I- D	-431 / 0	0.15 (1)
D- H	-431 / 0	0.15 (1)
H- E	-231 / 0	0.04 (1)
J- K	-242 / 0	0.00 (1)
L- M	-242 / 0	0.00 (1)

DESIGN CRITERIA

SPECIFIED LOADS:

TOP CH.	LL	=	23.3	PSF
	DL	=	6.0	PSF
BOT CH.	LL	=	0.0	PSF
	DL	=	7.4	PSF
TOTAL LOAD		=	36.7	PSF

SPACING = 24.0 IN. C/C

LOADING IN FLAT SECTION BASED ON A SLOPE OF 2.00/12 MINIMUM

THIS TRUSS IS DESIGNED FOR RESIDENTIAL OR SMALL BUILDING REQUIREMENTS OF PART 9, NBCC 2010, NBCC 2015

THIS DESIGN COMPLIES WITH:
- PART 9 OF BCBC 2018 , OBC 2012 , ABC 2019
- CSA 086-09, CSA 086-14
- TPIC 2011, TPIC 2014

(55 % OF 27.2 P.S.F. G.S.L. PLUS 8.4 P.S.F. RAIN LOAD) EQUALS 23.3 P.S.F. SPECIFIED ROOF LIVE LOAD

CSI: TC=0.23/1.00 (D-E:1) , BC=0.21/1.00 (H-I:4) , WB=0.15/1.00 (D-H:1) , SSI=0.17/1.00 (C-D:1)

DOL LUMBER=1.00 NAIL=1.00 LS BEND=1.10 COMP=1.10 SHEAR=1.10 TENS= 1.10

COMPANION LIVE LOAD FACTOR = 1.00

TRUSS PLATE MANUFACTURER IS NOT RESPONSIBLE FOR QUALITY CONTROL IN THE TRUSS MANUFACTURING PLANT .

NAIL VALUES

PLATE	GRIP(DRY) (PSI) MAX	MIN	SHEAR (PLI) MAX	MIN	SECTION (PLI) MAX	MIN
MT20	618	354	1667	788	1987	1656

PLATE PLACEMENT TOL. = 0.250 inches

PLATE ROTATION TOL. = 5.0 Deg.

JSI GRIP= 0.58 (H) (INPUT = 0.90)
JSI METAL= 0.14 (H) (INPUT = 1.00)

JOB NAME	TRUSS NAME	QUANTITY	PLY	JOB DESC.	DRWG NO.
313989	H07P		1	TRUSS DESC. JT-39002	E-19112493

Alpa Roof Truss, Maple

Version 8.300 S Aug 9 2019 MiTek Industries, Inc. Fri Nov 8 11:48:43 2019 Page 1
ID:VRLqmclDiflZCj2mk6F92VyQuye-0A5oJhCaR0lJtaPL7bzvCghGmZHe1aGnql7v7XyLGUI

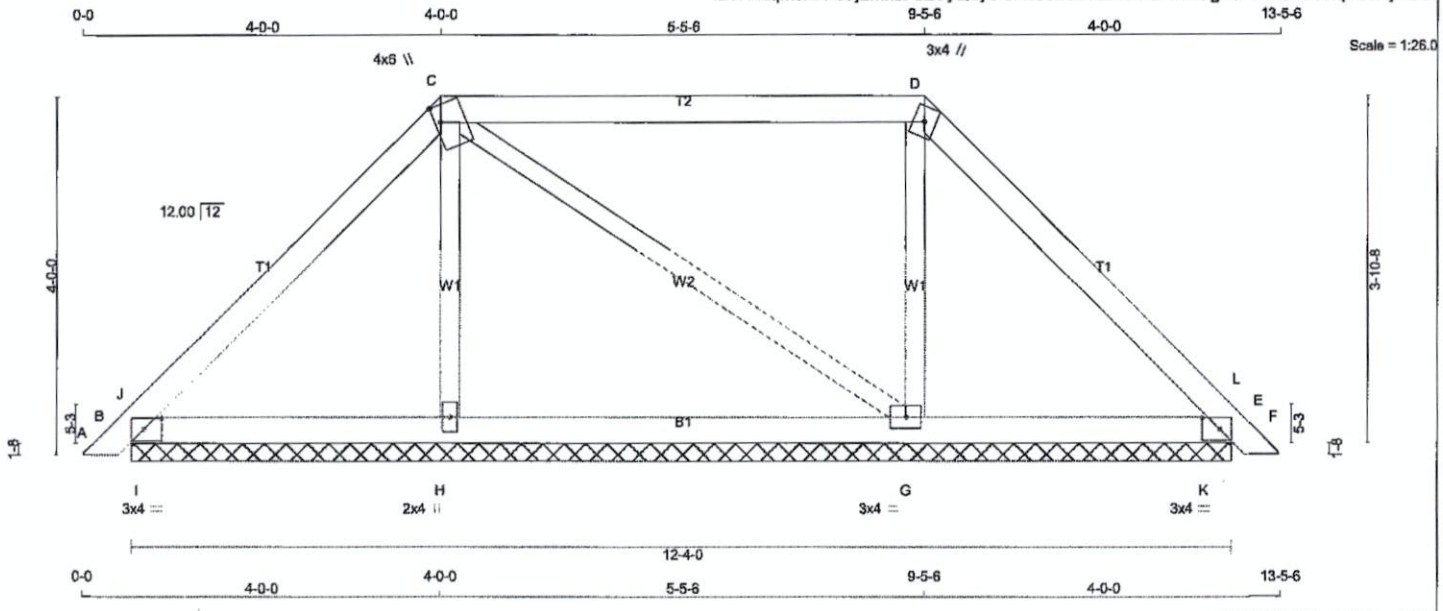

TOTAL WEIGHT = 3 X 43 = 130 lb

LUMBER

N. L. G. A. RULES

CHORDS	SIZE		LUMBER	DESCR.
A - C	2x4	DRY	No.2	SPF
C - D	2x4	DRY	No.2	SPF
D - F	2x4	DRY	No.2	SPF
B - E	2x4	DRY	No.2	SPF
ALL WEBS	2x3	DRY	No.2	SPF

DRY: SEASONED LUMBER.

PLATES (table is in inches)

JT	TYPE	PLATES	W	LEN	Y	X
B	TMB1-I	MT20	3.0	4.0	1.50	2.25
C	TTWW+m	MT20	4.0	6.0	2.25	0.75
D	TTW+m	MT20	3.0	4.0		
E	TMB1-I	MT20	3.0	4.0	1.50	2.50
G	BMWW1-t	MT20	3.0	4.0		
H	BMW1+w	MT20	2.0	4.0		

NOTE: Lateral brace(s) shown shall be 2x4 SPF #2

LICENSED PROFESSIONAL ENGINEER
11/08/2019
R. TURENNE
100157040
PROVINCE OF ONTARIO

DIMENSIONS, SUPPORTS AND LOADINGS SPECIFIED BY FABRICATOR TO BE VERIFIED BY BUILDING DESIGNER

BEARINGS

JT	FACTORED GROSS REACTION VERT	HORZ	MAXIMUM FACTORED GROSS REACTION DOWN	HORZ	UPLIFT	INPUT BRG IN-SX	REQRD BRG IN-SX
B	333	0	333	0	0	12-4-0	1-6-1
E	307	0	307	0	0	12-4-0	1-6-1
H	324	0	324	0	0	12-4-0	1-6-1
G	385	0	385	0	0	12-4-0	1-6-1

UNFACTORED REACTIONS

JT	1ST LCASE COMBINED	MAX./MIN. COMPONENT REACTIONS SNOW	LIVE	PERM.LIVE	WIND	DEAD	SOIL
B	233	169 / 0	0 / 0	0 / 0	0 / 0	64 / 0	0 / 0
E	215	155 / 0	0 / 0	0 / 0	0 / 0	60 / 0	0 / 0
H	233	129 / 0	0 / 0	0 / 0	0 / 0	104 / 0	0 / 0
G	276	163 / 0	0 / 0	0 / 0	0 / 0	113 / 0	0 / 0

BEARING MATERIAL TO BE SPF NO.2 OR BETTER AT JOINT(S) B, E, H, G

BRACING

TOP CHORD TO BE SHEATHED OR MAX. PURLIN SPACING = 6.25 FT.
MAX. UNBRACED BOTTOM CHORD LENGTH = 10.00 FT OR RIGID CEILING DIRECTLY APPLIED.

ALL PITCH BREAKS AND PERIMETER CORNER JOINTS MUST BE LATERALLY RESTRAINED.

LOADING

TOTAL LOAD CASES: (4)

CHORDS MEMB. FR-TO	MAX. FACTORED FORCE (LBS)	FACTORED VERT. LOAD LC1 (PLF) FROM	TO	MAX CSI (LC)	MAX. UNBRAC LENGTH
A- B	0 / 12	-84.9	-84.9	0.01 (1)	10.00
B- J	-24 / 0	-84.9	-84.9	0.07 (1)	6.25
J- C	-190 / 0	-84.9	-84.9	0.12 (1)	6.25
C- D	-93 / 0	-84.9	-84.9	0.43 (1)	6.25
D- L	-154 / 0	-84.9	-84.9	0.12 (1)	6.25
L- E	-17 / 23	-84.9	-84.9	0.07 (1)	6.25
E- F	0 / 12	-84.9	-84.9	0.01 (1)	10.00
B- I	0 / 126	-18.5	-18.5	0.12 (1)	10.00
I- H	0 / 126	-18.5	-18.5	0.12 (1)	10.00
H- G	0 / 120	-18.5	-18.5	0.10 (4)	10.00
G- K	0 / 101	-18.5	-18.5	0.12 (1)	10.00
K- E	0 / 101	-18.5	-18.5	0.12 (1)	10.00

WEBS MEMB. FR-TO	MAX. FACTORED FORCE (LBS)	MAX CSI (LC)
H- C	-209 / 0	0.05 (1)
C- G	-32 / 0	0.02 (1)
G- D	-252 / 0	0.06 (1)
I- J	-366 / 0	0.00 (1)
K- L	-363 / 0	0.00 (1)

DESIGN CRITERIA

SPECIFIED LOADS:

TOP CH.	LL	=	23.3	PSF
	DL	=	6.0	PSF
BOT CH.	LL	=	0.0	PSF
	DL	=	7.4	PSF
TOTAL LOAD		=	36.7	PSF

SPACING = 24.0 IN. C/C

LOADING IN FLAT SECTION BASED ON A SLOPE OF 2.00/12 MINIMUM

THIS TRUSS IS DESIGNED FOR RESIDENTIAL OR SMALL BUILDING REQUIREMENTS OF PART 9, NBCC 2010, NBCC 2015

THIS DESIGN COMPLIES WITH:
- PART 9 OF BCBC 2018 , OBC 2012 , ABC 2019
- CSA 086-09, CSA 086-14
- TPIC 2011, TPIC 2014

(55 % OF 27.2 P.S.F. G.S.L. PLUS 8.4 P.S.F. RAIN LOAD) EQUALS 23.3 P.S.F. SPECIFIED ROOF LIVE LOAD

CSI: TC=0.43/1.00 (C-D:1) , BC=0.12/1.00 (H-I:1) , WB=0.06/1.00 (D-G:1) , SSI=0.28/1.00 (E-K:1)

DOL LUMBER=1.00 NAIL=1.00 LS BEND=1.10 COMP=1.10 SHEAR=1.10 TENS= 1.10

COMPANION LIVE LOAD FACTOR = 1.00

TRUSS PLATE MANUFACTURER IS NOT RESPONSIBLE FOR QUALITY CONTROL IN THE TRUSS MANUFACTURING PLANT .

NAIL VALUES

PLATE	GRIP(DRY) (PSI) MAX	MIN	SHEAR (PLI) MAX	MIN	SECTION (PLI) MAX	MIN
MT20	618	354	1667	788	1987	1656

PLATE PLACEMENT TOL. = 0.250 inches

PLATE ROTATION TOL. = 5.0 Deg.

JSI GRIP= 0.53 (D) (INPUT = 0.90)
JSI METAL= 0.08 (B) (INPUT = 1.00)

JOB NAME	TRUSS NAME	QUANTITY	PLY	JOB DESC.	DRWG NO.
313989	H10		1	TRUSS DESC. JT-39002	E-19112494

Alpa Roof Truss, Maple

Version 8.300 S Aug 9 2019 MiTek Industries, Inc. Fri Nov 8 11:48:45 2019 Page 1
ID:VRLqmcIDiffZCj2mk6F92VyQuye-yYDYkNErzd?06uYkE?0NH5nfjNxhVUg4H0c0CQyLGUG

Scale = 1:54.6

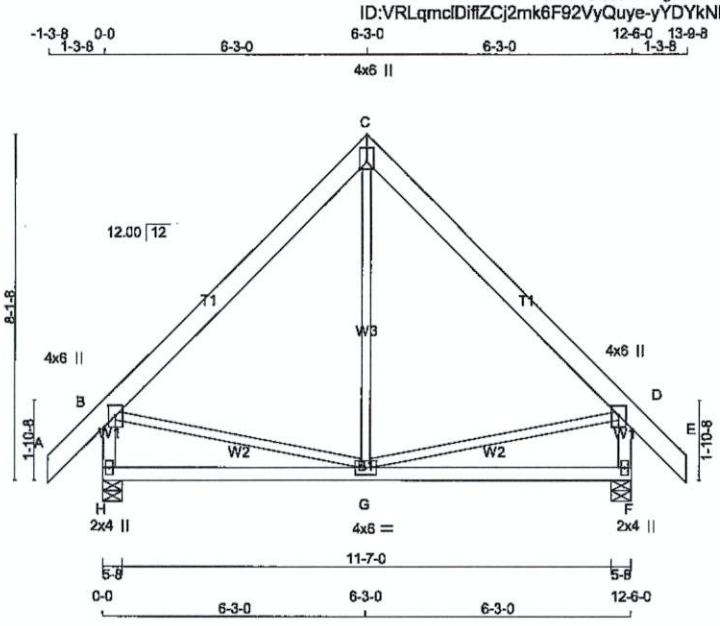

TOTAL WEIGHT = 73 lb
[M][F]

LUMBER
N. L. G. A. RULES

CHORDS	SIZE		LUMBER	DESCR.
A - C	2x6	DRY	No.2	SPF
C - E	2x6	DRY	No.2	SPF
H - B	2x4	DRY	No.2	SPF
F - D	2x4	DRY	No.2	SPF
H - F	2x4	DRY	No.2	SPF
ALL WEBS EXCEPT	2x3	DRY	No.2	SPF

DRY: SEASONED LUMBER.

PLATES (table is in inches)

JT	TYPE	PLATES	W	LEN	Y	X
B	TMVW+p	MT20	4.0	6.0	2.75	2.00
C	TTW+p	MT20	4.0	6.0	Edge	
D	TMVW+p	MT20	4.0	6.0	2.75	2.00
F	BMV1+p	MT20	2.0	4.0		
G	BMWWW-t	MT20	4.0	6.0		
H	BMV1+p	MT20	2.0	4.0		

Edge - INDICATES REFERENCE CORNER OF PLATE TOUCHES EDGE OF CHORD.

NOTE: Lateral brace(s) shown shall be 2x4 SPF #2

LICENSED PROFESSIONAL ENGINEER
11/08/2019
R. TURENNE
100157040
PROVINCE OF ONTARIO

DIMENSIONS, SUPPORTS AND LOADINGS SPECIFIED BY FABRICATOR TO BE VERIFIED BY BUILDING DESIGNER

BEARINGS

JT	FACTORED GROSS REACTION VERT	HORZ	MAXIMUM FACTORED GROSS REACTION DOWN	HORZ	UPLIFT	INPUT BRG IN-SX	REQRD BRG IN-SX
H	769	0	769	0	0	5-8	1-8
F	769	0	769	0	0	5-8	1-8

UNFACTORED REACTIONS

JT	1ST LCASE COMBINED	MAX./MIN. COMPONENT REACTIONS SNOW	LIVE	PERM.LIVE	WIND	DEAD	SOIL
H	544	359 / 0	0 / 0	0 / 0	0 / 0	185 / 0	0 / 0
F	544	359 / 0	0 / 0	0 / 0	0 / 0	185 / 0	0 / 0

BEARING MATERIAL TO BE SPF NO.2 OR BETTER AT JOINT(S) H, F

BRACING
TOP CHORD TO BE SHEATHED OR MAX. PURLIN SPACING = 6.25 FT.
MAX. UNBRACED BOTTOM CHORD LENGTH = 10.00 FT OR RIGID CEILING DIRECTLY APPLIED.

ALL PITCH BREAKS AND PERIMETER CORNER JOINTS MUST BE LATERALLY RESTRAINED.

LOADING
TOTAL LOAD CASES: (4)

CHORDS

MEMB. FR-TO	MAX. FACTORED FORCE (LBS)	FACTORED VERT. LOAD (PLF) FROM	TO	LC1 MAX CSI (LC)	MAX. UNBRAC LENGTH
A- B	0 / 44	-84.9	-84.9	0.07 (1)	10.00
B- C	-389 / 0	-84.9	-84.9	0.21 (1)	6.25
C- D	-389 / 0	-84.9	-84.9	0.21 (1)	6.25
D- E	0 / 44	-84.9	-84.9	0.07 (1)	10.00
H- B	-726 / 0	0.0	0.0	0.08 (1)	7.81
F- D	-726 / 0	0.0	0.0	0.08 (1)	7.81
H- G	0 / 0	-18.5	-18.5	0.21 (4)	10.00
G- F	0 / 0	-18.5	-18.5	0.21 (4)	10.00

WEBS

MEMB. FR-TO	MAX. FACTORED FORCE (LBS)	MAX CSI (LC)
G- C	0 / 112	0.04 (4)
B- G	0 / 282	0.06 (1)
G- D	0 / 282	0.06 (1)

DESIGN CRITERIA

SPECIFIED LOADS:

TOP CH.	LL	=	23.3	PSF
	DL	=	6.0	PSF
BOT CH.	LL	=	0.0	PSF
	DL	=	7.4	PSF
TOTAL LOAD		=	36.7	PSF

SPACING = 24.0 IN. C/C

THIS TRUSS IS DESIGNED FOR RESIDENTIAL OR SMALL BUILDING REQUIREMENTS OF PART 9, NBCC 2010, NBCC 2015

THIS DESIGN COMPLIES WITH:
- PART 9 OF BCBC 2018 , OBC 2012 , ABC 2019
- CSA 086-09, CSA 086-14
- TPIC 2011, TPIC 2014

(55 % OF 27.2 P.S.F. G.S.L. PLUS 8.4 P.S.F. RAIN LOAD) EQUALS 23.3 P.S.F. SPECIFIED ROOF LIVE LOAD

ALLOWABLE DEFL.(LL)= L/360 (0.42")
CALCULATED VERT. DEFL.(LL) = L/ 999 (0.00")
ALLOWABLE DEFL.(TL)= L/360 (0.42")
CALCULATED VERT. DEFL.(TL) = L/ 999 (0.03")

CSI: TC=0.21/1.00 (C-D:1) , BC=0.21/1.00 (G-H:4) , WB=0.06/1.00 (D-G:1) , SSI=0.11/1.00 (C-D:1)

DOL LUMBER=1.00 NAIL=1.00 LS BEND=1.10 COMP=1.10 SHEAR=1.10 TENS= 1.10

COMPANION LIVE LOAD FACTOR = 1.00

TRUSS PLATE MANUFACTURER IS NOT RESPONSIBLE FOR QUALITY CONTROL IN THE TRUSS MANUFACTURING PLANT .

NAIL VALUES

PLATE	GRIP(DRY) (PSI) MAX	MIN	SHEAR (PLI) MAX	MIN	SECTION (PLI) MAX	MIN
MT20	618	354	1667	788	1987	1656

PLATE PLACEMENT TOL. = 0.250 inches

PLATE ROTATION TOL. = 5.0 Deg.

JSI GRIP= 0.51 (B) (INPUT = 0.90)
JSI METAL= 0.25 (B) (INPUT = 1.00)

JOB NAME	TRUSS NAME	QUANTITY	PLY	JOB DESC.	DRWG NO.
313989	H10B		1	TRUSS DESC. JT-39002	E-19112495

Alpa Roof Truss, Maple

Version 8.300 S Aug 9 2019 MiTek Industries, Inc. Fri Nov 8 11:48:46 2019 Page 1

ID:VRLqmcIDiflZCj2mk6F92VyQuye-QInwyjETkx7tk27wojXcqJJqPnHoEx7DWgLZksyLGUF

Scale = 1:49.1

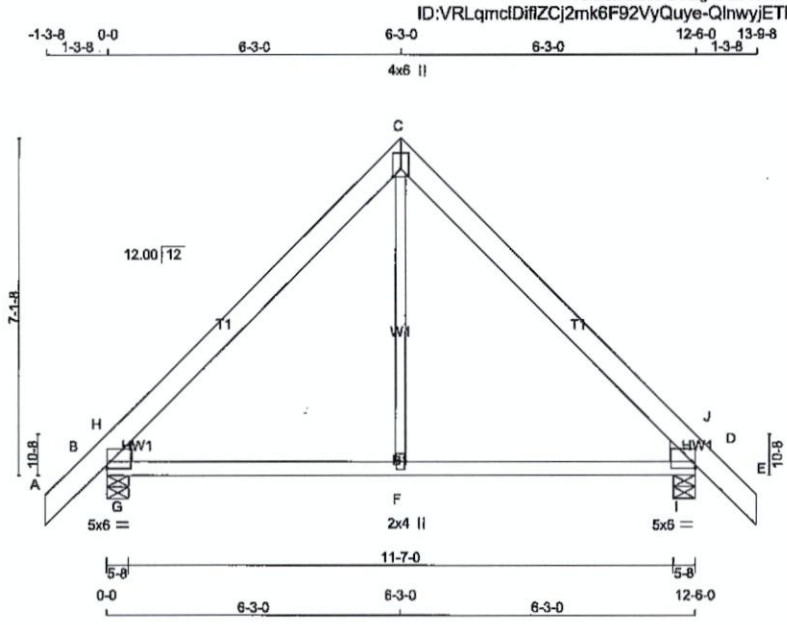

TOTAL WEIGHT = 2 X 61 = 122 lb

[M][F]

LUMBER

N. L. G. A. RULES

CHORDS	SIZE		LUMBER	DESCR.
A - C	2x6	DRY	No.2	SPF
C - E	2x6	DRY	No.2	SPF
B - D	2x4	DRY	No.2	SPF
ALL WEBS	2x3	DRY	No.2	SPF

DRY: SEASONED LUMBER.

PLATES (table is in inches)

JT	TYPE	PLATES	W	LEN	Y	X
B	TMBH1-I	MT20	5.0	6.0	1.75	Edge
C	TTW+p	MT20	4.0	6.0	Edge	
D	TMBH1-I	MT20	5.0	6.0	1.75	Edge
F	BMW+w	MT20	2.0	4.0		

Edge - INDICATES REFERENCE CORNER OF PLATE TOUCHES EDGE OF CHORD.

NOTE: Lateral brace(s) shown shall be 2x4 SPF #2

LICENSED PROFESSIONAL ENGINEER
11/08/2019
R. TURENNE
100157040
PROVINCE OF ONTARIO

DIMENSIONS, SUPPORTS AND LOADINGS SPECIFIED BY FABRICATOR TO BE VERIFIED BY BUILDING DESIGNER

BEARINGS

JT	FACTORED GROSS REACTION VERT	HORZ	MAXIMUM FACTORED GROSS REACTION DOWN	HORZ	UPLIFT	INPUT BRG IN-SX	REQRD BRG IN-SX	HEEL WEDGE
B	769	0	769	0	0	5-8	1-8	2x6 L
D	769	0	769	0	0	5-8	1-8	2x6 R

UNFACTORED REACTIONS

JT	1ST LCASE COMBINED	MAX./MIN. COMPONENT REACTIONS SNOW	LIVE	PERM.LIVE	WIND	DEAD	SOIL
B	544	359 / 0	0 / 0	0 / 0	0 / 0	185 / 0	0 / 0
D	544	359 / 0	0 / 0	0 / 0	0 / 0	185 / 0	0 / 0

BEARING MATERIAL TO BE SPF NO.2 OR BETTER AT JOINT(S) B, D

BRACING

TOP CHORD TO BE SHEATHED OR MAX. PURLIN SPACING = 6.25 FT.
MAX. UNBRACED BOTTOM CHORD LENGTH = 10.00 FT OR RIGID CEILING DIRECTLY APPLIED.

ALL PITCH BREAKS AND PERIMETER CORNER JOINTS MUST BE LATERALLY RESTRAINED.

LOADING

TOTAL LOAD CASES: (4)

CHORDS

MEMB. FR-TO	MAX. FACTORED FORCE (LBS)	FACTORED VERT. LOAD (PLF) FROM	TO	LC1	MAX CSI (LC)	MAX. UNBRAC LENGTH
A- B	0 / 36	-84.9	-84.9	0.06 (1)	10.00	
B- H	-474 / 0	-84.9	-84.9	0.06 (1)	6.25	
H- C	-468 / 0	-84.9	-84.9	0.21 (1)	6.25	
C- J	-468 / 0	-84.9	-84.9	0.21 (1)	6.25	
J- D	-474 / 0	-84.9	-84.9	0.06 (1)	6.25	
D- E	0 / 36	-84.9	-84.9	0.06 (1)	10.00	
B- G	0 / 322	-18.5	-18.5	0.14 (1)	10.00	
G- F	0 / 322	-18.5	-18.5	0.22 (1)	10.00	
F- I	0 / 322	-18.5	-18.5	0.22 (1)	10.00	
I- D	0 / 322	-18.5	-18.5	0.14 (1)	10.00	

WEBS

MEMB. FR-TO	MAX. FACTORED FORCE (LBS)	MAX CSI (LC)
F- C	0 / 174	0.05 (4)
G- H	-224 / 133	0.00 (1)
I- J	-224 / 133	0.00 (1)

DESIGN CRITERIA

SPECIFIED LOADS:

TOP CH.	LL =	23.3	PSF
	DL =	6.0	PSF
BOT CH.	LL =	0.0	PSF
	DL =	7.4	PSF
TOTAL LOAD	=	36.7	PSF

SPACING = 24.0 IN. C/C

THIS TRUSS IS DESIGNED FOR RESIDENTIAL OR SMALL BUILDING REQUIREMENTS OF PART 9, NBCC 2010, NBCC 2015

THIS DESIGN COMPLIES WITH:
- PART 9 OF BCBC 2018 , OBC 2012 , ABC 2019
- CSA 086-09, CSA 086-14
- TPIC 2011, TPIC 2014

(55 % OF 27.2 P.S.F. G.S.L. PLUS 8.4 P.S.F. RAIN LOAD) EQUALS 23.3 P.S.F. SPECIFIED ROOF LIVE LOAD

ALLOWABLE DEFL.(LL)= L/360 (0.42")
CALCULATED VERT. DEFL.(LL) = L/ 999 (0.02")
ALLOWABLE DEFL.(TL)= L/360 (0.42")
CALCULATED VERT. DEFL.(TL) = L/ 999 (0.04")

CSI: TC=0.21/1.00 (C-H:1) , BC=0.22/1.00 (F-G:1) , WB=0.05/1.00 (C-F:4) , SSI=0.20/1.00 (D-I:1)

DOL LUMBER=1.00 NAIL=1.00 LS BEND=1.10 COMP=1.10 SHEAR=1.10 TENS= 1.10

COMPANION LIVE LOAD FACTOR = 1.00

TRUSS PLATE MANUFACTURER IS NOT RESPONSIBLE FOR QUALITY CONTROL IN THE TRUSS MANUFACTURING PLANT .

NAIL VALUES

PLATE	GRIP(DRY) (PSI) MAX	MIN	SHEAR (PLI) MAX	MIN	SECTION (PLI) MAX	MIN
MT20	618	354	1667	788	1987	1656

PLATE PLACEMENT TOL. = 0.250 inches

PLATE ROTATION TOL. = 5.0 Deg.

JSI GRIP= 0.68 (D) (INPUT = 0.90)
JSI METAL= 0.14 (D) (INPUT = 1.00)

JOB NAME	TRUSS NAME	QUANTITY	PLY	JOB DESC.	DRWG NO.
313989	H10BG		1	TRUSS DESC. JT-39002	E-19112496

Alpa Roof Truss, Maple

Version 8.300 S Aug 9 2019 MiTek Industries, Inc. Fri Nov 8 11:48:47 2019 Page 1
ID:VRLqmcIDiflZC|2mk6F92VyQuye-uxLJ93F5VEFkMCi6MQ2rMWs1cAf6zNgNlK56GlyLGUE

Scale = 1:45.5

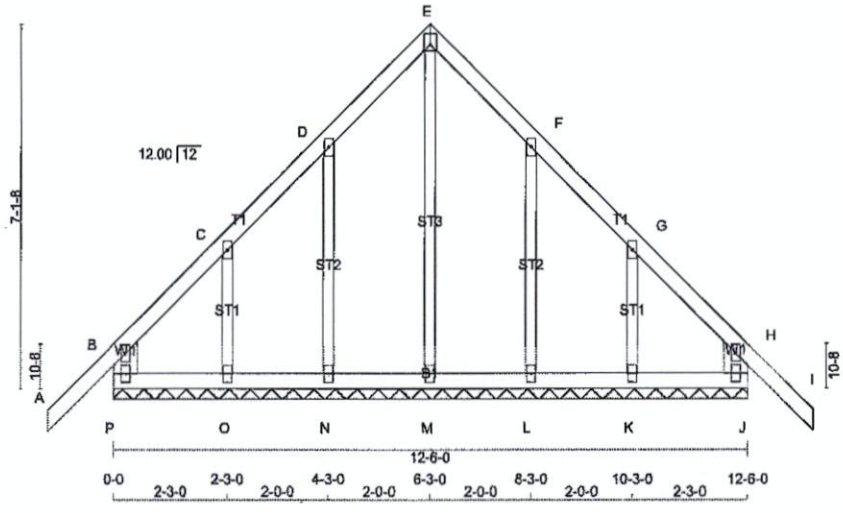

TOTAL WEIGHT = 58 lb

[M]

LUMBER

N. L. G. A. RULES

CHORDS	SIZE		LUMBER	DESCR.
A - E	2x4	DRY	No.2	SPF
E - I	2x4	DRY	No.2	SPF
P - B	2x6	DRY	No.2	SPF
J - H	2x6	DRY	No.2	SPF
P - J	2x4	DRY	No.2	SPF
ALL WEBS	2x3	DRY	No.2	SPF
ALL GABLE WEBS	2x3	DRY	No.2	SPF

DRY: SEASONED LUMBER.

GABLE STUDS SPACED AT 2-0-0 OC.

PLATES (table is in inches)

JT	TYPE	PLATES	W	LEN	Y	X
B	TMV+p	MT20	2.0	4.0		
C, D, F, G						
C	TMW+w	MT20	2.0	4.0		
E	TTW+p	MT20	3.0	4.0	Edge	
H	TMV+p	MT20	2.0	4.0		
J	BMV1+p	MT20	2.0	4.0		
K, L, M, N, O						
K	BMW1+w	MT20	2.0	4.0		
P	BMV1+p	MT20	2.0	4.0		

Edge - INDICATES REFERENCE CORNER OF PLATE TOUCHES EDGE OF CHORD.

NOTE: Lateral brace(s) shown shall be 2x4 SPF #2

LICENSED PROFESSIONAL ENGINEER
11/08/2019
R TURENNE
100157040
PROVINCE OF ONTARIO

DIMENSIONS, SUPPORTS AND LOADINGS SPECIFIED BY FABRICATOR TO BE VERIFIED BY BUILDING DESIGNER

BEARINGS

THIS TRUSS DESIGNED FOR CONTINUOUS BEARINGS.

THIS TRUSS REQUIRES RIGID SHEATHING ON EXPOSED FACE.

BEARING MATERIAL TO BE SPF NO.2 OR BETTER AT JOINT(S)

BRACING

TOP CHORD TO BE SHEATHED OR MAX. PURLIN SPACING = 6.25 FT.
MAX. UNBRACED BOTTOM CHORD LENGTH = 10.00 FT OR RIGID CEILING DIRECTLY APPLIED.

ALL PITCH BREAKS AND PERIMETER CORNER JOINTS MUST BE LATERALLY RESTRAINED.

LOADING

TOTAL LOAD CASES: (4)

CHORDS

MEMB. FR-TO	MAX. FACTORED FORCE (LBS)	FACTORED VERT. LOAD LC1 (PLF) FROM	TO	MAX CSI (LC)	MAX. UNBRAC LENGTH
A- B	0 / 42	-84.9	-84.9	0.12 (1)	10.00
B- C	-66 / 0	-84.9	-84.9	0.05 (1)	6.25
C- D	-55 / 0	-84.9	-84.9	0.04 (1)	6.25
D- E	-48 / 0	-84.9	-84.9	0.05 (1)	6.25
E- F	-48 / 0	-84.9	-84.9	0.05 (1)	6.25
F- G	-55 / 0	-84.9	-84.9	0.04 (1)	6.25
G- H	-66 / 0	-84.9	-84.9	0.05 (1)	6.25
H- I	0 / 42	-84.9	-84.9	0.12 (1)	10.00
P- B	-257 / 0	0.0	0.0	0.01 (1)	7.81
J- H	-257 / 0	0.0	0.0	0.01 (1)	7.81
P- O	0 / 45	-18.5	-18.5	0.02 (4)	10.00
O- N	0 / 39	-18.5	-18.5	0.02 (4)	10.00
N- M	0 / 35	-18.5	-18.5	0.02 (4)	10.00
M- L	0 / 35	-18.5	-18.5	0.02 (4)	10.00
L- K	0 / 39	-18.5	-18.5	0.02 (4)	10.00
K- J	0 / 45	-18.5	-18.5	0.02 (4)	10.00

WEBS

MEMB. FR-TO	MAX. FACTORED FORCE (LBS)	MAX CSI (LC)
M- E	-113 / 0	0.10 (1)
N- D	-167 / 0	0.06 (1)
O- C	-168 / 0	0.03 (1)
L- F	-167 / 0	0.06 (1)
K- G	-168 / 0	0.03 (1)

DESIGN CRITERIA

SPECIFIED LOADS:

TOP CH.	LL	=	23.3	PSF
	DL	=	6.0	PSF
BOT CH.	LL	=	0.0	PSF
	DL	=	7.4	PSF
TOTAL LOAD		=	36.7	PSF

SPACING = 24.0 IN. C/C

THIS TRUSS IS DESIGNED FOR RESIDENTIAL OR SMALL BUILDING REQUIREMENTS OF PART 9, NBCC 2010, NBCC 2015

THIS DESIGN COMPLIES WITH:
- PART 9 OF BCBC 2018 , OBC 2012 , ABC 2019
- CSA 086-09, CSA 086-14
- TPIC 2011, TPIC 2014

DESIGN ASSUMPTIONS
-OVERHANG NOT TO BE ALTERED OR CUT OFF.

(55 % OF 27.2 P.S.F. G.S.L. PLUS 8.4 P.S.F. RAIN LOAD) EQUALS 23.3 P.S.F. SPECIFIED ROOF LIVE LOAD

CSI: TC=0.12/1.00 (H-I:1) , BC=0.02/1.00 (J-K:4) , WB=0.10/1.00 (E-M:1) , SSI=0.07/1.00 (H-I:1)

DOL LUMBER=1.00 NAIL=1.00 LS BEND=1.10 COMP=1.10 SHEAR=1.10 TENS= 1.10

COMPANION LIVE LOAD FACTOR = 1.00

AUTOSOLVE HEELS OFF

TRUSS PLATE MANUFACTURER IS NOT RESPONSIBLE FOR QUALITY CONTROL IN THE TRUSS MANUFACTURING PLANT .

NAIL VALUES

PLATE	GRIP(DRY) (PSI) MAX	MIN	SHEAR (PLI) MAX	MIN	SECTION (PLI) MAX	MIN
MT20	618	354	1667	788	1987	1656

PLATE PLACEMENT TOL. = 0.250 inches

PLATE ROTATION TOL. = 5.0 Deg.

JSI GRIP= 0.24 (B) (INPUT = 0.90)
JSI METAL= 0.16 (B) (INPUT = 1.00)

JOB NAME	TRUSS NAME	QUANTITY	PLY	JOB DESC.	DRWG NO.
313989	H11	1	1	TRUSS DESC. JT-39002	E-19112497

Alpa Roof Truss, Maple

Version 8.300 S Aug 9 2019 MiTek Industries, Inc. Fri Nov 8 11:48:49 2019 Page 1
ID:VRLqmcIDiflZCj2mk6F92VyQuye-rKT3akHL0sVSbVsVTr4JRxxJR_HhR7wfCeaDLByLGUC

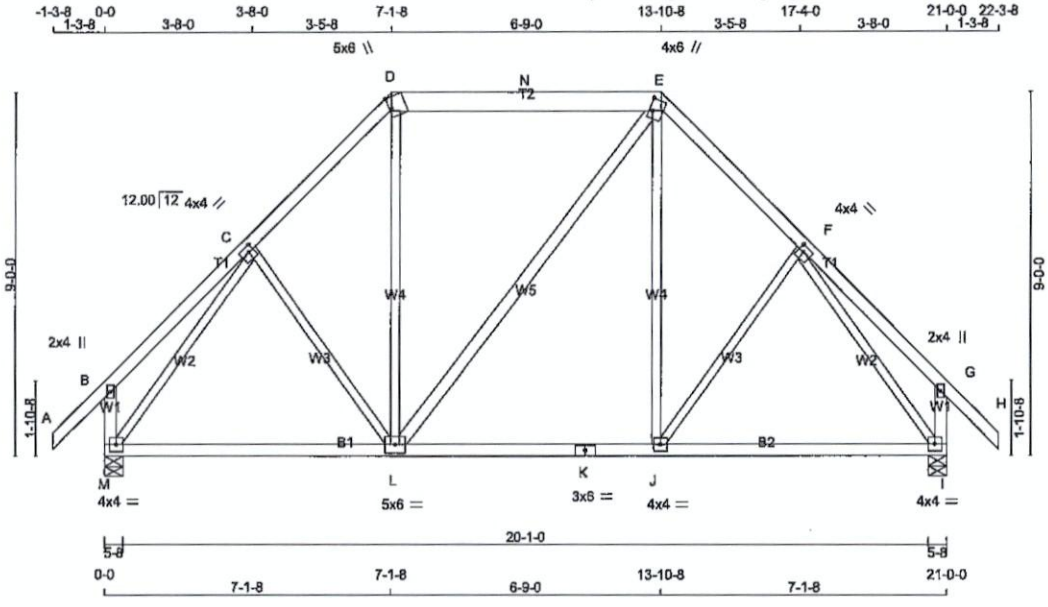

TOTAL WEIGHT = 2 X 112 = 223 lb

[M][F]

LUMBER

N. L. G. A. RULES

CHORDS	SIZE		LUMBER	DESCR.
A - D	2x4	DRY	No.2	SPF
D - E	2x6	DRY	No.2	SPF
E - H	2x4	DRY	No.2	SPF
M - B	2x4	DRY	No.2	SPF
I - G	2x4	DRY	No.2	SPF
M - K	2x4	DRY	No.2	SPF
K - I	2x4	DRY	No.2	SPF
ALL WEBS	2x3	DRY	No.2	SPF
EXCEPT				
L - E	2x4	DRY	No.2	SPF

DRY: SEASONED LUMBER.

PLATES (table is in inches)

JT	TYPE	PLATES	W	LEN	Y	X
B	TMV+p	MT20	2.0	4.0		
C	TMWW-t	MT20	4.0	4.0	1.75	1.50
D	TTW+m	MT20	5.0	6.0	Edge	0.50
E	TTWW+m	MT20	4.0	6.0	3.75	1.00
F	TMWW-t	MT20	4.0	4.0	1.75	1.50
G	TMV+p	MT20	2.0	4.0		
I	BMVW1-t	MT20	4.0	4.0		
J	BMWW-t	MT20	4.0	4.0		
K	BS-t	MT20	3.0	6.0		
L	BMWWW-t	MT20	5.0	6.0		
M	BMVW1-t	MT20	4.0	4.0		

Edge - INDICATES REFERENCE CORNER OF PLATE TOUCHES EDGE OF CHORD.

NOTE: Lateral brace(s) shown shall be 2x4 SPF #2

LICENSED PROFESSIONAL ENGINEER
11/08/2019
R. TURENNE
100157040
PROVINCE OF ONTARIO

DIMENSIONS, SUPPORTS AND LOADINGS SPECIFIED BY FABRICATOR TO BE VERIFIED BY BUILDING DESIGNER

BEARINGS

JT	FACTORED GROSS REACTION VERT	HORZ	MAXIMUM FACTORED GROSS REACTION DOWN	HORZ	UPLIFT	INPUT BRG IN-SX	REQRD BRG IN-SX
M	1229	0	1229	0	0	5-8	1-8
I	1229	0	1229	0	0	5-8	1-8

UNFACTORED REACTIONS

JT	1ST LCASE COMBINED	MAX./MIN. COMPONENT REACTIONS SNOW	LIVE	PERM.LIVE	WIND	DEAD	SOIL
M	872	554 / 0	0 / 0	0 / 0	0 / 0	318 / 0	0 / 0
I	872	554 / 0	0 / 0	0 / 0	0 / 0	318 / 0	0 / 0

BEARING MATERIAL TO BE SPF NO.2 OR BETTER AT JOINT(S) M, I

BRACING

FOR SECTION D-E, MAX. PURLIN SPACING = 2.00 FT.
FOR OTHER SECTIONS, TOP CHORD TO BE SHEATHED OR MAX. PURLIN SPACING = 6.25 FT.
MAX. UNBRACED BOTTOM CHORD LENGTH = 10.00 FT OR RIGID CEILING DIRECTLY APPLIED.

ALL PITCH BREAKS AND PERIMETER CORNER JOINTS MUST BE LATERALLY RESTRAINED.

LOADING

TOTAL LOAD CASES: (4)

CHORDS

MEMB. FR-TO	MAX. FACTORED FORCE (LBS)	FACTORED VERT. LOAD LC1 (PLF) FROM	TO	MAX CSI (LC)	MAX. UNBRAC LENGTH
A- B	0 / 42	-84.9	-84.9	0.12 (1)	10.00
B- C	0 / 25	-84.9	-84.9	0.17 (1)	10.00
C- D	-901 / 0	-84.9	-84.9	0.14 (1)	6.25
D- N	-623 / 0	-92.4	-92.4	0.35 (1)	2.00
N- E	-623 / 0	-92.4	-92.4	0.35 (1)	2.00
E- F	-900 / 0	-84.9	-84.9	0.14 (1)	6.25
F- G	0 / 25	-84.9	-84.9	0.17 (1)	10.00
G- H	0 / 42	-84.9	-84.9	0.12 (1)	10.00
M- B	-233 / 0	0.0	0.0	0.03 (1)	7.81
I- G	-233 / 0	0.0	0.0	0.03 (1)	7.81
M- L	0 / 657	-18.5	-18.5	0.27 (4)	10.00
L- K	0 / 623	-18.5	-18.5	0.27 (4)	10.00
K- J	0 / 623	-18.5	-18.5	0.27 (4)	10.00
J- I	0 / 657	-18.5	-18.5	0.26 (4)	10.00

WEBS

MEMB. FR-TO	MAX. FACTORED FORCE (LBS)	MAX CSI (LC)
C- L	-61 / 22	0.04 (1)
L- D	0 / 188	0.05 (4)
L- E	0 / 0	0.00 (1)
J- E	0 / 188	0.05 (4)
J- F	-61 / 22	0.04 (1)
M- C	-1148 / 0	0.75 (1)
F- I	-1147 / 0	0.75 (1)

DESIGN CRITERIA

SPECIFIED LOADS:

TOP	CH.	LL	=	23.3	PSF
		DL	=	6.0	PSF
BOT	CH.	LL	=	0.0	PSF
		DL	=	7.4	PSF
TOTAL	LOAD		=	36.7	PSF

SPACING = 24.0 IN. C/C

LOADING IN FLAT SECTION BASED ON PIGGYBACK TRUSS WITH SLOPES OF 6.00/12 AND -6.00/12 AND RESPECTIVE WALL HEIGHTS OF 0-0 AND 0-0 AND AN ADDITIONAL DEAD LOAD OF 3.0 P.S.F.

THIS TRUSS IS DESIGNED FOR RESIDENTIAL OR SMALL BUILDING REQUIREMENTS OF PART 9, NBCC 2010, NBCC 2015

THIS DESIGN COMPLIES WITH:
- PART 9 OF BCBC 2018 , OBC 2012 , ABC 2019
- CSA 086-09, CSA 086-14
- TPIC 2011, TPIC 2014

(55 % OF 27.2 P.S.F. G.S.L. PLUS 8.4 P.S.F. RAIN LOAD) EQUALS 23.3 P.S.F. SPECIFIED ROOF LIVE LOAD

ALLOWABLE DEFL.(LL)= L/360 (0.70")
CALCULATED VERT. DEFL.(LL) = L/ 999 (0.02")
ALLOWABLE DEFL.(TL)= L/360 (0.70")
CALCULATED VERT. DEFL.(TL) = L/ 999 (0.09")

CSI: TC=0.35/1.00 (D-E:1) , BC=0.27/1.00 (J-L:4) , WB=0.75/1.00 (C-M:1) , SSI=0.19/1.00 (D-E:1)

DOL LUMBER=1.00 NAIL=1.00 LS BEND=1.10 COMP=1.10 SHEAR=1.10 TENS= 1.10

COMPANION LIVE LOAD FACTOR = 1.00

TRUSS PLATE MANUFACTURER IS NOT RESPONSIBLE FOR QUALITY CONTROL IN THE TRUSS MANUFACTURING PLANT .

NAIL VALUES

PLATE	GRIP(DRY) (PSI) MAX	MIN	SHEAR (PLI) MAX	MIN	SECTION (PLI) MAX	MIN
MT20	618	354	1667	788	1987	1656

PLATE PLACEMENT TOL. = 0.250 inches

PLATE ROTATION TOL. = 5.0 Deg.

JSI GRIP= 0.89 (E) (INPUT = 0.90)
JSI METAL= 0.43 (C) (INPUT = 1.00)

JOB NAME	TRUSS NAME	QUANTITY	PLY	JOB DESC.	DRWG NO.
313989	H11A		1	TRUSS DESC. JT-39002	E-19112498

Alpa Roof Truss, Maple

Version 8.300 S Aug 9 2019 MiTek Industries, Inc. Fri Nov 8 11:48:50 2019 Page 1
ID:VRLqmcIDiflZCj2mk6F92VyQuye-JW0Rn4lzn9dJDfRh1ZbY_9UTLOZAAXFpRHJntdyLGUB

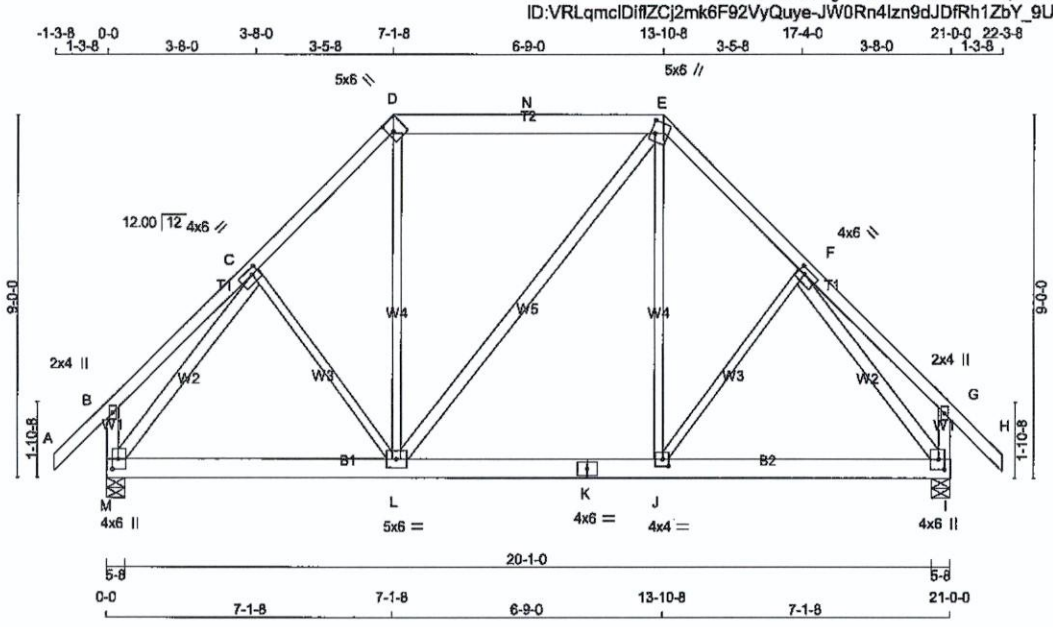

TOTAL WEIGHT = 128 lb

LUMBER

N. L. G. A. RULES

CHORDS	SIZE		LUMBER	DESCR.
A - D	2x4	DRY	No.2	SPF
D - E	2x6	DRY	No.2	SPF
E - H	2x4	DRY	No.2	SPF
M - B	2x4	DRY	No.2	SPF
I - G	2x4	DRY	No.2	SPF
M - K	2x6	DRY	No.2	SPF
K - I	2x6	DRY	No.2	SPF
ALL WEBS	2x4	DRY	No.2	SPF
EXCEPT				
C - L	2x3	DRY	No.2	SPF
L - D	2x3	DRY	No.2	SPF
J - E	2x3	DRY	No.2	SPF
J - F	2x3	DRY	No.2	SPF

DRY: SEASONED LUMBER.

PLATES (table is in inches)

JT	TYPE	PLATES	W	LEN	Y	X
B	TMV+p	MT20	2.0	4.0		
C	TMWW-t	MT20	4.0	6.0	1.75	2.00
D	TTW+h	MT20	5.0	6.0	3.25	1.50
E	TTWW+m	MT20	5.0	6.0	3.75	1.25
F	TMWW-t	MT20	4.0	6.0	1.75	2.00
G	TMV+p	MT20	2.0	4.0		
I	BMVW1+p	MT20	4.0	6.0	3.00	1.75
J	BMWW-t	MT20	4.0	4.0	2.00	1.75
K	BS-t	MT20	4.0	6.0		
L	BMWWW-t	MT20	5.0	6.0		
M	BMVW1+p	MT20	4.0	6.0	3.00	1.75

NOTE: Lateral brace(s) shown shall be 2x4 SPF #2

LICENSED PROFESSIONAL ENGINEER
11/08/2019
R. TURENNE
100157040
PROVINCE OF ONTARIO

DIMENSIONS, SUPPORTS AND LOADINGS SPECIFIED BY FABRICATOR TO BE VERIFIED BY BUILDING DESIGNER

BEARINGS

JT	FACTORED GROSS REACTION VERT	HORZ	MAXIMUM FACTORED GROSS REACTION DOWN	HORZ	UPLIFT	INPUT BRG IN-SX	REQRD BRG IN-SX
M	2280	0	2280	0	0	5-8	2-8
I	2280	0	2280	0	0	5-8	2-8

UNFACTORED REACTIONS

JT	1ST LCASE COMBINED	MAX./MIN. COMPONENT REACTIONS SNOW	LIVE	PERM.LIVE	WIND	DEAD	SOIL
M	1619	1028 / 0	0 / 0	0 / 0	0 / 0	591 / 0	0 / 0
I	1619	1028 / 0	0 / 0	0 / 0	0 / 0	591 / 0	0 / 0

BEARING MATERIAL TO BE SPF NO.2 OR BETTER AT JOINT(S) M, I

BRACING

FOR SECTION D-E, MAX. PURLIN SPACING = 2.00 FT.
FOR OTHER SECTIONS, TOP CHORD TO BE SHEATHED OR MAX. PURLIN SPACING = 4.74 FT.
MAX. UNBRACED BOTTOM CHORD LENGTH = 10.00 FT OR RIGID CEILING DIRECTLY APPLIED.

ALL PITCH BREAKS AND PERIMETER CORNER JOINTS MUST BE LATERALLY RESTRAINED.

LOADING

TOTAL LOAD CASES: (4)

CHORDS MEMB. FR-TO	MAX. FACTORED FORCE (LBS)	FACTORED VERT. LOAD (PLF) FROM	TO	LC1 CSI (LC)	MAX	MAX. UNBRAC LENGTH
A- B	0 / 42	-84.9	-84.9	0.13 (1)	10.00	
B- C	0 / 23	-84.9	-84.9	0.18 (1)	10.00	
C- D	-1797 / 0	-84.9	-84.9	0.24 (1)	4.74	
D- N	-1267 / 0	-92.4	-92.4	0.41 (1)	2.00	
N- E	-1267 / 0	-92.4	-92.4	0.41 (1)	2.00	
E- F	-1793 / 0	-84.9	-84.9	0.24 (1)	4.74	
F- G	0 / 23	-84.9	-84.9	0.18 (1)	10.00	
G- H	0 / 42	-84.9	-84.9	0.13 (1)	10.00	
M- B	-235 / 0	0.0	0.0	0.03 (1)	7.81	
I- G	-235 / 0	0.0	0.0	0.03 (1)	7.81	
M- L	0 / 1201	-118.6	-118.6	0.56 (1)	10.00	
L- K	0 / 1264	-118.6	-118.6	0.57 (1)	10.00	
K- J	0 / 1264	-118.6	-118.6	0.57 (1)	10.00	
J- I	0 / 1199	-118.6	-118.6	0.55 (1)	10.00	

WEBS MEMB. FR-TO	MAX. FACTORED FORCE (LBS)	MAX CSI (LC)
C- L	0 / 93	0.03 (4)
L- D	0 / 819	0.20 (1)
L- E	0 / 4	0.00 (1)
J- E	0 / 813	0.20 (1)
J- F	0 / 92	0.03 (4)
M- C	-2076 / 0	0.94 (1)
F- I	-2072 / 0	0.94 (1)

DESIGN CRITERIA

SPECIFIED LOADS:

TOP CH.	LL =	23.3	PSF
	DL =	6.0	PSF
BOT CH.	LL =	0.0	PSF
	DL =	7.4	PSF
TOTAL LOAD	=	36.7	PSF

SPACING = 24.0 IN. C/C

LOADING IN FLAT SECTION BASED ON PIGGYBACK TRUSS WITH SLOPES OF 6.00/12 AND -6.00/12 AND RESPECTIVE WALL HEIGHTS OF 0-0 AND 0-0 AND AN ADDITIONAL DEAD LOAD OF 3.0 P.S.F.

GIRDER TYPE: CStdGirder
START DISTANCE = 0-0
START SPAN CARRIED = 5-10-8
END DISTANCE = 20-11-4
END SPAN CARRIED = 5-10-8
END WALL WIDTH = 0-0
APPLIED TO FRONT SIDE OF BOTTOM CHORD.
- ADDT'L LOADS BASED ON 55 % OF GSL.

THIS TRUSS IS DESIGNED FOR RESIDENTIAL OR SMALL BUILDING REQUIREMENTS OF PART 9, NBCC 2010, NBCC 2015

THIS DESIGN COMPLIES WITH:
- PART 9 OF BCBC 2018 , OBC 2012 , ABC 2019
- CSA 086-09, CSA 086-14
- TPIC 2011, TPIC 2014

(55 % OF 27.2 P.S.F. G.S.L. PLUS 8.4 P.S.F. RAIN LOAD) EQUALS 23.3 P.S.F. SPECIFIED ROOF LIVE LOAD

ALLOWABLE DEFL.(LL)= L/360 (0.70")
CALCULATED VERT. DEFL.(LL) = L/ 999 (0.07")
ALLOWABLE DEFL.(TL)= L/360 (0.70")
CALCULATED VERT. DEFL.(TL) = L/ 999 (0.16")

CSI: TC=0.41/1.00 (D-E:1) , BC=0.57/1.00 (J-L:1) , WB=0.94/1.00 (C-M:1) , SSI=0.34/1.00 (L-M:1)

DOL LUMBER=1.00 NAIL=1.00 LS BEND=1.00 COMP=1.00 SHEAR=1.00 TENS= 1.00

COMPANION LIVE LOAD FACTOR = 1.00

AUTOSOLVE HEELS OFF

TRUSS PLATE MANUFACTURER IS NOT RESPONSIBLE FOR QUALITY CONTROL IN THE TRUSS MANUFACTURING PLANT .

NAIL VALUES

PLATE	GRIP(DRY) (PSI) MAX	MIN	SHEAR (PLI) MAX	MIN	SECTION (PLI) MAX	MIN
MT20	618	354	1667	788	1987	1656

PLATE PLACEMENT TOL. = 0.250 inches

PLATE ROTATION TOL. = 5.0 Deg.

CONTINUED ON PAGE 2

JOB NAME	TRUSS NAME	QUANTITY	PLY	JOB DESC.	DRWG NO.
313989	H11SG		1	TRUSS DESC. JT-39002	E-19112499

Alpa Roof Truss, Maple

Version 8.300 S Aug 9 2019 MiTek Industries, Inc. Fri Nov 8 11:48:52 2019 Page 1
ID:VRLqmcIDifIZCj2mk6F92VyQuye-Fv8CCmJEJnu1Szb48_e03aZtJBKweYO6ubotyWyLGU9

Scale = 1:58.4

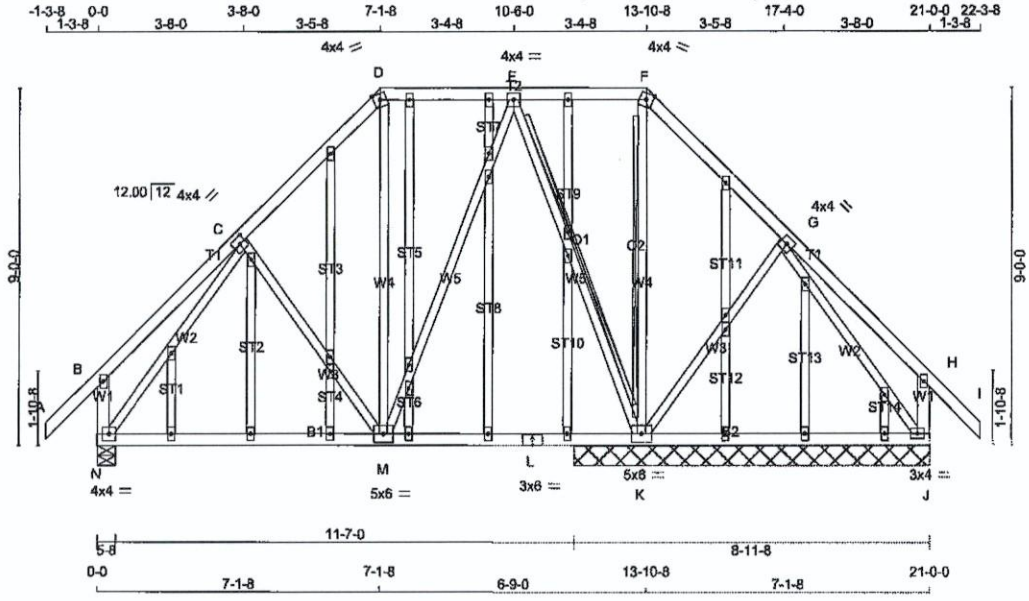

TOTAL WEIGHT = 151 lb

LUMBER

N. L. G. A. RULES

CHORDS	SIZE		LUMBER	DESCR.
A - D	2x4	DRY	No.2	SPF
D - F	2x4	DRY	No.2	SPF
F - I	2x4	DRY	No.2	SPF
N - B	2x4	DRY	No.2	SPF
J - H	2x4	DRY	No.2	SPF
N - L	2x4	DRY	No.2	SPF
L - J	2x4	DRY	No.2	SPF
ALL WEBS EXCEPT	2x3	DRY	No.2	SPF
ALL GABLE WEBS	2x3	DRY	No.2	SPF

DRY: SEASONED LUMBER.

GABLE STUDS SPACED AT 2-0-0 OC.

PLATES (table is in inches)

JT	TYPE	PLATES	W	LEN	Y	X
B	TMV+p	MT20	2.0	4.0		
C	TMWW-t	MT20	4.0	4.0	2.00	1.75
D	TTW-m	MT20	4.0	4.0	Edge	
E	TMWW-t	MT20	4.0	4.0		
F	TTW-m	MT20	4.0	4.0	Edge	
G	TMWW-t	MT20	4.0	4.0		
H	TMV+p	MT20	2.0	4.0		
J	BMVW1-t	MT20	3.0	4.0		
K	BMWWW1-t	MT20	5.0	6.0		
L	BS-t	MT20	3.0	6.0		
M	BMWWW-t	MT20	5.0	6.0		
N	BMVW1-t	MT20	4.0	4.0		

O, P, Q, Q, R, R, S, T, U, U, V, W, X, X, Y, Z, AA, AB, AC, AD, AE, AF, AG, AG, AH, AI, AJ, AK

O	NP+w	MT20	2.0	4.0

Edge - INDICATES REFERENCE CORNER OF PLATE TOUCHES EDGE OF CHORD.

NOTE: Lateral brace(s) shown shall be 2x4 SPF #2

LICENSED PROFESSIONAL ENGINEER
11/08/2019
R. TURENNE
100157040
PROVINCE OF ONTARIO

DIMENSIONS, SUPPORTS AND LOADINGS SPECIFIED BY FABRICATOR TO BE VERIFIED BY BUILDING DESIGNER

BEARINGS

JT	FACTORED GROSS REACTION VERT	HORZ	MAXIMUM FACTORED GROSS REACTION DOWN	HORZ	UPLIFT	INPUT BRG IN-SX	REQRD BRG IN-SX
K	1200	0	1200	0	0	8-11-8	1-10-10
N	816	0	816	0	0	5-8	1-8
J	442	0	442	0	0	8-11-8	1-10-10

UNFACTORED REACTIONS

1ST LCASE — MAX./MIN. COMPONENT REACTIONS

JT	COMBINED	SNOW	LIVE	PERM.LIVE	WIND	DEAD	SOIL
K	856	519 / 0	0 / 0	0 / 0	0 / 0	336 / 0	0 / 0
N	578	375 / 0	0 / 0	0 / 0	0 / 0	203 / 0	0 / 0
J	311	213 / 0	0 / 0	0 / 0	0 / 0	98 / 0	0 / 0

BEARING MATERIAL TO BE SPF NO.2 OR BETTER AT JOINT(S) K, N, J

BRACING

FOR SECTION D-F, MAX. PURLIN SPACING = 2.00 FT.
FOR OTHER SECTIONS, TOP CHORD TO BE SHEATHED OR MAX. PURLIN SPACING = 6.25 FT.
MAX. UNBRACED BOTTOM CHORD LENGTH = 10.00 FT OR RIGID CEILING DIRECTLY APPLIED.

ALL PITCH BREAKS AND PERIMETER CORNER JOINTS MUST BE LATERALLY RESTRAINED.

2x4 DRY SPF No.2 T-BRACE AT E-K, F-K

FASTEN T AND I-BRACES TO NARROW EDGE OF WEB WITH ONE ROW PER PLY OF 3" COMMON WIRE NAILS @ 6" O.C. WITH 3" MINIMUM END DISTANCE. BRACE MUST COVER 90% OF WEB LENGTH.

END VERTICAL(S) MUST BE SHEATHED OR HAVE BRACES AS INDICATED IN THE MAX. UNBRACED LENGTH COLUMN OF THE TABLE BELOW

LOADING

TOTAL LOAD CASES: (4)

CHORDS

MEMB. FR-TO	MAX. FACTORED FORCE (LBS)	FACTORED VERT. LOAD LC1 (PLF) FROM	TO	MAX CSI (LC)	MAX. UNBRAC LENGTH
A- B	0 / 42	-84.9	-84.9	0.12 (1)	10.00
B- C	0 / 26	-84.9	-84.9	0.18 (1)	10.00
C- D	-419 / 0	-84.9	-84.9	0.18 (1)	6.25
D- E	-278 / 0	-92.4	-92.4	0.18 (1)	2.00
E- F	0 / 32	-92.4	-92.4	0.18 (1)	2.00
F- G	0 / 15	-84.9	-84.9	0.18 (1)	10.00
G- H	0 / 27	-84.9	-84.9	0.19 (1)	10.00
H- I	0 / 42	-84.9	-84.9	0.12 (1)	10.00
N- B	-231 / 0	0.0	0.0	0.03 (1)	7.81
J- H	-230 / 0	0.0	0.0	0.03 (1)	7.81
N- M	0 / 369	-18.5	-18.5	0.23 (4)	10.00
M- L	0 / 195	-18.5	-18.5	0.23 (4)	10.00
L- K	0 / 195	-18.5	-18.5	0.23 (4)	10.00
K- J	0 / 111	-18.5	-18.5	0.22 (4)	10.00

WEBS

MEMB. FR-TO	MAX. FACTORED FORCE (LBS)	MAX CSI (LC)
C- M	-155 / 0	0.11 (1)
M- D	0 / 58	0.02 (4)
M- E	0 / 235	0.05 (1)
E- K	-647 / 0	0.45 (1)
K- F	-263 / 0	0.16 (1)
K- G	-235 / 0	0.17 (1)
N- C	-645 / 0	0.42 (1)
G- J	-194 / 0	0.13 (1)

DESIGN CRITERIA

SPECIFIED LOADS:

TOP CH.	LL	=	23.3	PSF
	DL	=	6.0	PSF
BOT CH.	LL	=	0.0	PSF
	DL	=	7.4	PSF
TOTAL LOAD		=	36.7	PSF

SPACING = 24.0 IN. C/C

LOADING IN FLAT SECTION BASED ON PIGGYBACK TRUSS WITH SLOPES OF 6.00/12 AND -6.00/12 AND RESPECTIVE WALL HEIGHTS OF 0-0 AND 0-0 AND AN ADDITIONAL DEAD LOAD OF 3.0 P.S.F.

THIS TRUSS IS DESIGNED FOR RESIDENTIAL OR SMALL BUILDING REQUIREMENTS OF PART 9, NBCC 2010, NBCC 2015

THIS DESIGN COMPLIES WITH:
- PART 9 OF BCBC 2018 , OBC 2012 , ABC 2019
- CSA 086-09, CSA 086-14
- TPIC 2011, TPIC 2014

(55 % OF 27.2 P.S.F. G.S.L. PLUS 8.4 P.S.F. RAIN LOAD) EQUALS 23.3 P.S.F. SPECIFIED ROOF LIVE LOAD

ALLOWABLE DEFL.(LL)= L/360 (0.46")
CALCULATED VERT. DEFL.(LL) = L/ 999 (0.01")
ALLOWABLE DEFL.(TL)= L/360 (0.46")
CALCULATED VERT. DEFL.(TL) = L/ 999 (0.08")

CSI: TC=0.19/1.00 (G-H:1) , BC=0.23/1.00 (M-N:4) , WB=0.45/1.00 (E-K:1) , SSI=0.15/1.00 (D-E:1)

DOL LUMBER=1.00 NAIL=1.00 LS BEND=1.10 COMP=1.10 SHEAR=1.10 TENS= 1.10

COMPANION LIVE LOAD FACTOR = 1.00

TRUSS PLATE MANUFACTURER IS NOT RESPONSIBLE FOR QUALITY CONTROL IN THE TRUSS MANUFACTURING PLANT .

NAIL VALUES

PLATE	GRIP(DRY) (PSI) MAX	MIN	SHEAR (PLI) MAX	MIN	SECTION (PLI) MAX	MIN
MT20	618	354	1667	788	1987	1656

PLATE PLACEMENT TOL. = 0.250 inches

PLATE ROTATION TOL. = 5.0 Deg.

JSI GRIP= 0.77 (J) (INPUT = 0.90)
JSI METAL= 0.25 (C) (INPUT = 1.00)

JOB NAME	TRUSS NAME	QUANTITY	PLY	JOB DESC.	DRWG NO.
313989	H12P		1	TRUSS DESC. JT-39002	E-19112500

Alpa Roof Truss, Maple

Version 8.300 S Aug 9 2019 MiTek Industries, Inc. Fri Nov 8 11:48:53 2019 Page 1
ID:VRLqmclDiftZCj2mk6F92VyQuye-j5iaQ6Ks440u47AGih9Fcn63Bbh7N6eF7FYRUyyLGU8

Scale: 1/2"=1'

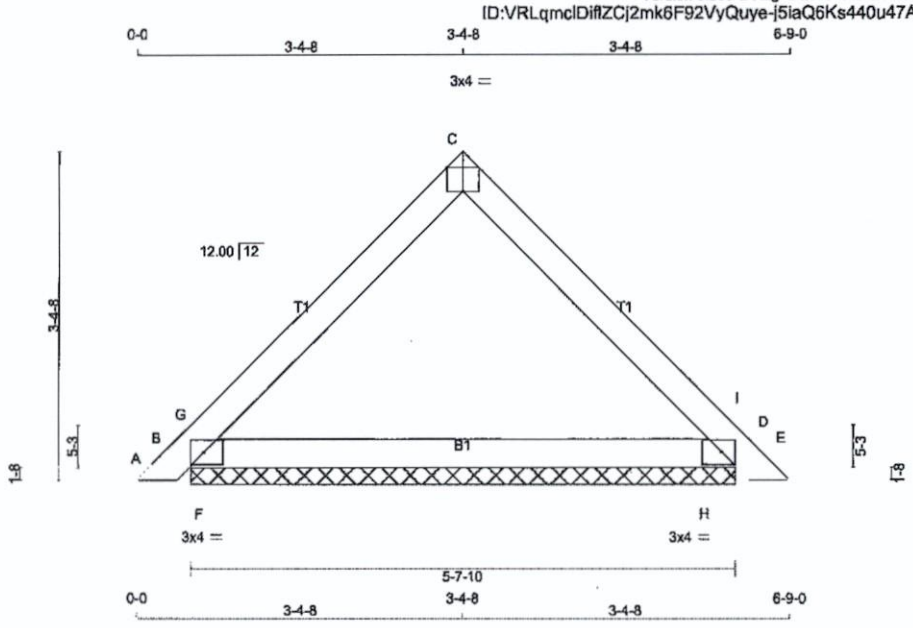

TOTAL WEIGHT = 3 X 17 = 52 lb [M]

LUMBER

N. L. G. A. RULES

CHORDS	SIZE		LUMBER	DESCR.
A - C	2x4	DRY	No.2	SPF
C - E	2x4	DRY	No.2	SPF
B - D	2x4	DRY	No.2	SPF

DRY: SEASONED LUMBER.

PLATES (table is in inches)

JT	TYPE	PLATES	W	LEN	Y	X
B	TMB1-I	MT20	3.0	4.0	1.50	2.50
C	TT-p	MT20	3.0	4.0	Edge	2.00
D	TMB1-I	MT20	3.0	4.0	1.50	2.50

Edge - INDICATES REFERENCE CORNER OF PLATE TOUCHES EDGE OF CHORD.

NOTE: Lateral brace(s) shown shall be 2x4 SPF #2

DIMENSIONS, SUPPORTS AND LOADINGS SPECIFIED BY FABRICATOR TO BE VERIFIED BY BUILDING DESIGNER

BEARINGS

JT	FACTORED GROSS REACTION VERT	HORZ	MAXIMUM FACTORED GROSS REACTION DOWN	HORZ	UPLIFT	INPUT BRG IN-SX	REQRD BRG IN-SX
B	329	0	329	0	0	5-7-10	1-8
D	329	0	329	0	0	5-7-10	1-8

UNFACTORED REACTIONS

JT	1ST LCASE COMBINED	MAX./MIN. COMPONENT REACTIONS SNOW	LIVE	PERM.LIVE	WIND	DEAD	SOIL
B	233	152 / 0	0 / 0	0 / 0	0 / 0	81 / 0	0 / 0
D	233	152 / 0	0 / 0	0 / 0	0 / 0	81 / 0	0 / 0

BEARING MATERIAL TO BE SPF NO.2 OR BETTER AT JOINT(S) B, D

BRACING

TOP CHORD TO BE SHEATHED OR MAX. PURLIN SPACING = 6.25 FT.
MAX. UNBRACED BOTTOM CHORD LENGTH = 10.00 FT OR RIGID CEILING DIRECTLY APPLIED.

ALL PITCH BREAKS AND PERIMETER CORNER JOINTS MUST BE LATERALLY RESTRAINED.

LOADING

TOTAL LOAD CASES: (4)

CHORDS MEMB. FR-TO	MAX. FACTORED FORCE (LBS)	FACTORED VERT. LOAD LC1 (PLF) FROM	TO	MAX CSI (LC)	MAX. UNBRAC LENGTH	WEBS MEMB. FR-TO	MAX. FACTORED FORCE (LBS)	MAX CSI (LC)
A- B	0 / 12	-84.9	-84.9	0.01 (1)	10.00	F- G	0 / 170	0.00 (1)
B- G	-294 / 0	-84.9	-84.9	0.07 (4)	6.25	H- I	0 / 170	0.00 (1)
G- C	-163 / 0	-84.9	-84.9	0.11 (1)	6.25			
C- I	-163 / 0	-84.9	-84.9	0.11 (1)	6.25			
I- D	-294 / 0	-84.9	-84.9	0.07 (4)	6.25			
D- E	0 / 12	-84.9	-84.9	0.01 (1)	10.00			
B- F	0 / 119	-18.5	-18.5	0.06 (4)	10.00			
F- H	0 / 119	-18.5	-18.5	0.11 (4)	10.00			
H- D	0 / 119	-18.5	-18.5	0.06 (4)	10.00			

DESIGN CRITERIA

SPECIFIED LOADS:

TOP CH.	LL	=	23.3	PSF
	DL	=	6.0	PSF
BOT CH.	LL	=	0.0	PSF
	DL	=	7.4	PSF
TOTAL LOAD		=	36.7	PSF

SPACING = 24.0 IN. C/C

THIS TRUSS IS DESIGNED FOR RESIDENTIAL OR SMALL BUILDING REQUIREMENTS OF PART 9, NBCC 2010, NBCC 2015

THIS DESIGN COMPLIES WITH:
- PART 9 OF BCBC 2018 , OBC 2012 , ABC 2019
- CSA 086-09, CSA 086-14
- TPIC 2011, TPIC 2014

(55 % OF 27.2 P.S.F. G.S.L. PLUS 8.4 P.S.F. RAIN LOAD) EQUALS 23.3 P.S.F. SPECIFIED ROOF LIVE LOAD

CSI: TC=0.11/1.00 (C-I:1) , BC=0.11/1.00 (F-H:4) , WB=0.00/1.00 (F-G:1) , SSI=0.14/1.00 (B-F:4)

DOL LUMBER=1.00 NAIL=1.00 LS BEND=1.10 COMP=1.10 SHEAR=1.10 TENS= 1.10

COMPANION LIVE LOAD FACTOR = 1.00

TRUSS PLATE MANUFACTURER IS NOT RESPONSIBLE FOR QUALITY CONTROL IN THE TRUSS MANUFACTURING PLANT .

NAIL VALUES

PLATE	GRIP(DRY) (PSI) MAX	MIN	SHEAR (PLI) MAX	MIN	SECTION (PLI) MAX	MIN
MT20	618	354	1667	788	1987	1656

PLATE PLACEMENT TOL. = 0.250 Inches

PLATE ROTATION TOL. = 5.0 Deg.

JSI GRIP= 0.28 (B) (INPUT = 0.90)
JSI METAL= 0.07 (B) (INPUT = 1.00)

JOB NAME	TRUSS NAME	QUANTITY	PLY	JOB DESC.		DRWG NO.
313989	H12PG		1	TRUSS DESC.	JT-39002	E-19112501

Alpa Roof Truss, Maple

Version 8.300 S Aug 9 2019 MiTek Industries, Inc. Fri Nov 8 11:48:55 2019 Page 1
ID:VRLqmcIDifZCj2mk6F92VyQuye-fTqKroL6ciGcJQJfq6BjhCBP7POar0uYbZ1YYryLGU6

Scale = 1:24.8

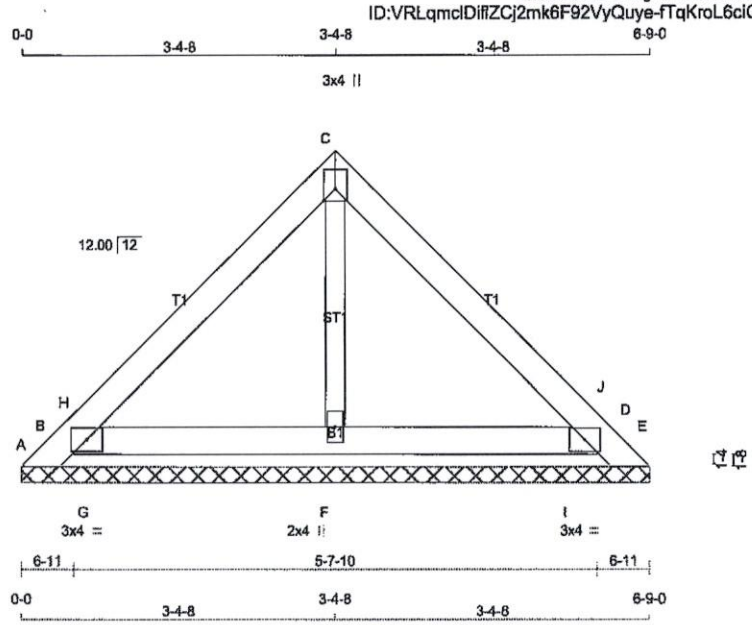

TOTAL WEIGHT = 19 lb

[M]

LUMBER
N. L. G. A. RULES

CHORDS	SIZE		LUMBER	DESCR.
A - C	2x4	DRY	No.2	SPF
C - E	2x4	DRY	No.2	SPF
B - D	2x4	DRY	No.2	SPF
ALL WEBS	2x3	DRY	No.2	SPF
ALL GABLE WEBS	2x3	DRY	No.2	SPF

DRY: SEASONED LUMBER.

GABLE STUDS SPACED AT 2-0-0 OC.

PLATES (table is in inches)

JT	TYPE	PLATES	W	LEN	Y	X
B	TMB1-I	MT20	3.0	4.0		
C	TTW+p	MT20	3.0	4.0	Edge	
D	TMB1-I	MT20	3.0	4.0		
F	BMW1+w	MT20	2.0	4.0		

Edge - INDICATES REFERENCE CORNER OF PLATE TOUCHES EDGE OF CHORD.

NOTE: Lateral brace(s) shown shall be 2x4 SPF #2

LICENSED PROFESSIONAL ENGINEER
11/08/2019
R. TURENNE
100157040
PROVINCE OF ONTARIO

DIMENSIONS, SUPPORTS AND LOADINGS SPECIFIED BY FABRICATOR TO BE VERIFIED BY BUILDING DESIGNER

BEARINGS

THIS TRUSS DESIGNED FOR CONTINUOUS BEARINGS.

THIS TRUSS REQUIRES RIGID SHEATHING ON EXPOSED FACE.

BEVELED PLATE OR SHIM REQUIRED TO PROVIDE FULL BEARING SURFACE WITH TRUSS CHORD AT JT(S): F

PROVIDE ANCHORAGE AT BEARING JOINT A FOR 150 LBS FACTORED UPLIFT
PROVIDE ANCHORAGE AT BEARING JOINT E FOR 150 LBS FACTORED UPLIFT
BEARING MATERIAL TO BE SPF NO.2 OR BETTER AT JOINT(S)

BRACING

TOP CHORD TO BE SHEATHED OR MAX. PURLIN SPACING = 6.25 FT.
MAX. UNBRACED BOTTOM CHORD LENGTH = 10.00 FT OR RIGID CEILING DIRECTLY APPLIED.

ALL PITCH BREAKS AND PERIMETER CORNER JOINTS MUST BE LATERALLY RESTRAINED.

LOADING

TOTAL LOAD CASES: (4)

CHORDS

MEMB. FR-TO	MAX. FACTORED FORCE (LBS)	FACTORED VERT. LOAD LC1 (PLF) FROM	TO	MAX CSI (LC)	MAX. UNBRAC LENGTH
A- B	0 / 77	-103.4	-103.4	0.09 (1)	10.00
B- H	-101 / 0	-84.9	-84.9	0.07 (1)	6.25
H- C	-79 / 0	-84.9	-84.9	0.07 (1)	6.25
C- J	-79 / 0	-84.9	-84.9	0.07 (1)	6.25
J- D	-101 / 0	-84.9	-84.9	0.07 (1)	6.25
D- E	0 / 77	-103.4	-103.4	0.09 (1)	10.00
B- G	0 / 47	-18.5	-18.5	0.04 (1)	10.00
G- F	0 / 47	-18.5	-18.5	0.05 (1)	10.00
F- I	0 / 47	-18.5	-18.5	0.05 (1)	10.00
I- D	0 / 47	-18.5	-18.5	0.04 (1)	10.00

WEBS

MEMB. FR-TO	MAX. FACTORED FORCE (LBS)	MAX CSI (LC)
F- C	-91 / 0	0.02 (1)
G- H	-94 / 25	0.00 (1)
I- J	-94 / 25	0.00 (1)

DESIGN CRITERIA

SPECIFIED LOADS:

TOP CH.	LL	=	23.3	PSF
	DL	=	6.0	PSF
BOT CH.	LL	=	0.0	PSF
	DL	=	7.4	PSF
TOTAL LOAD		=	36.7	PSF

SPACING = 24.0 IN. C/C

THIS TRUSS IS DESIGNED FOR RESIDENTIAL OR SMALL BUILDING REQUIREMENTS OF PART 9, NBCC 2010, NBCC 2015

THIS DESIGN COMPLIES WITH:
- PART 9 OF BCBC 2018 , OBC 2012 , ABC 2019
- CSA 086-09, CSA 086-14
- TPIC 2011, TPIC 2014

(55 % OF 27.2 P.S.F. G.S.L. PLUS 8.4 P.S.F. RAIN LOAD) EQUALS 23.3 P.S.F. SPECIFIED ROOF LIVE LOAD

CSI: TC=0.09/1.00 (D-E:1) , BC=0.05/1.00 (F-I:1) , WB=0.02/1.00 (C-F:1) , SSI=0.09/1.00 (D-E:1)

DOL LUMBER=1.00 NAIL=1.00 LS BEND=1.10 COMP=1.10 SHEAR=1.10 TENS= 1.10

COMPANION LIVE LOAD FACTOR = 1.00

TRUSS PLATE MANUFACTURER IS NOT RESPONSIBLE FOR QUALITY CONTROL IN THE TRUSS MANUFACTURING PLANT .

NAIL VALUES

PLATE	GRIP(DRY) (PSI) MAX	MIN	SHEAR (PLI) MAX	MIN	SECTION (PLI) MAX	MIN
MT20	618	354	1667	788	1987	1656

PLATE PLACEMENT TOL. = 0.250 inches

PLATE ROTATION TOL. = 5.0 Deg.

JSI GRIP= 0.27 (B) (INPUT = 0.90)
JSI METAL= 0.07 (D) (INPUT = 1.00)

JOB NAME	TRUSS NAME	QUANTITY	PLY	JOB DESC.	DRWG NO.
313989	J01	:	1	TRUSS DESC. JT-39002	E-19112502

Alpa Roof Truss, Maple

Version 8.300 S Aug 9 2019 MiTek Industries, Inc. Fri Nov 8 11:48:56 2019 Page 1
ID:VRLqmclDiflZCj2mk6F92VyQuye-7gOi28MkN?OTxaurNpiyEQkTPpgnaTOhpDm55HyLGU5

Scale = 1:33.6

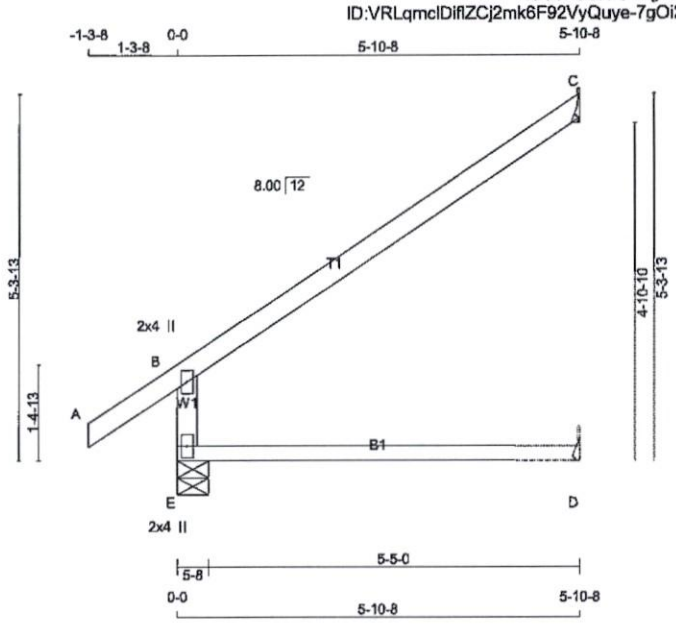

TOTAL WEIGHT = 30 X 16 = 480 lb

[M]

LUMBER
N. L. G. A. RULES

CHORDS	SIZE		LUMBER	DESCR.
E - B	2x4	DRY	No.2	SPF
A - C	2x4	DRY	No.2	SPF
E - D	2x3	DRY	No.2	SPF

DRY: SEASONED LUMBER.

PLATES (table is in inches)

JT	TYPE	PLATES	W	LEN Y	X
B	TMV+p	MT20	2.0	4.0	
E	BMV1+p	MT20	2.0	4.0	

NOTE: Lateral brace(s) shown shall be 2x4 SPF #2

LICENSED PROFESSIONAL ENGINEER
11/08/2019
R. TURENNE
100157040
PROVINCE OF ONTARIO

DIMENSIONS, SUPPORTS AND LOADINGS SPECIFIED BY FABRICATOR TO BE VERIFIED BY BUILDING DESIGNER

BEARINGS

JT	FACTORED GROSS REACTION VERT	HORZ	MAXIMUM FACTORED GROSS REACTION DOWN	HORZ	UPLIFT	INPUT BRG IN-SX	REQRD BRG IN-SX
E	494	0	494	0	0	5-8	1-8
C	187	0	187	0	0	MECHANICAL	
D	43	0	48	0	0	MECHANICAL	

A SUITABLE HANGER/MECHANICAL CONNECTION IS REQUIRED AT JOINT C, D. MINIMUM BEARING LENGTH AT JOINT C = 1-8, JOINT D = 1-8.

BEVELED PLATE OR SHIM REQUIRED TO PROVIDE FULL BEARING SURFACE WITH TRUSS CHORD AT JT(S): C

UNFACTORED REACTIONS

JT	1ST LCASE COMBINED	MAX./MIN. COMPONENT REACTIONS SNOW	LIVE	PERM.LIVE	WIND	DEAD	SOIL
E	348	235 / 0	0 / 0	0 / 0	0 / 0	113 / 0	0 / 0
C	129	103 / 0	0 / 0	0 / 0	0 / 0	26 / 0	0 / 0
D	34	0 / 0	0 / 0	0 / 0	0 / 0	34 / 0	0 / 0

BEARING MATERIAL TO BE SPF NO.2 OR BETTER AT JOINT(S) E

BRACING
TOP CHORD TO BE SHEATHED OR MAX. PURLIN SPACING = 6.25 FT.
MAX. UNBRACED BOTTOM CHORD LENGTH = 10.00 FT OR RIGID CEILING DIRECTLY APPLIED.

ALL PITCH BREAKS AND PERIMETER CORNER JOINTS MUST BE LATERALLY RESTRAINED.

LOADING
TOTAL LOAD CASES: (4)

CHORDS

MEMB. FR-TO	MAX. FACTORED FORCE (LBS)	FACTORED VERT. LOAD (PLF) FROM	TO	LC1	MAX CSI (LC)	MAX. UNBRAC LENGTH
E- B	-428 / 0	0.0	0.0	0.16 (4)		7.81
A- B	0 / 32	-84.9	-84.9	0.11 (1)		10.00
B- C	-35 / 0	-84.9	-84.9	0.50 (1)		6.25
E- D	0 / 0	-18.5	-18.5	0.30 (4)		10.00

WEBS

MEMB. FR-TO	MAX. FACTORED FORCE (LBS)	MAX CSI (LC)

DESIGN CRITERIA

SPECIFIED LOADS:

TOP CH.	LL =	23.3	PSF
	DL =	6.0	PSF
BOT CH.	LL =	0.0	PSF
	DL =	7.4	PSF
TOTAL LOAD	=	36.7	PSF

SPACING = 24.0 IN. C/C

THIS TRUSS IS DESIGNED FOR RESIDENTIAL OR SMALL BUILDING REQUIREMENTS OF PART 9, NBCC 2010, NBCC 2015

THIS DESIGN COMPLIES WITH:
- PART 9 OF BCBC 2018 , OBC 2012 , ABC 2019
- CSA 086-09, CSA 086-14
- TPIC 2011, TPIC 2014

DESIGN ASSUMPTIONS
-OVERHANG NOT TO BE ALTERED OR CUT OFF.

(55 % OF 27.2 P.S.F. G.S.L. PLUS 8.4 P.S.F. RAIN LOAD) EQUALS 23.3 P.S.F. SPECIFIED ROOF LIVE LOAD

ALLOWABLE DEFL.(LL)= L/360 (0.20")
CALCULATED VERT. DEFL.(LL) = L/ 999 (0.00")
ALLOWABLE DEFL.(TL)= L/360 (0.20")
CALCULATED VERT. DEFL.(TL) = L/ 932 (0.06")

CSI: TC=0.50/1.00 (B-C:1) , BC=0.30/1.00 (D-E:4) , WB=0.00/1.00 (n/a:0) , SSI=0.20/1.00 (B-C:1)

DOL LUMBER=1.00 NAIL=1.00 LS BEND=1.10 COMP=1.10 SHEAR=1.10 TENS= 1.10

COMPANION LIVE LOAD FACTOR = 1.00

TRUSS PLATE MANUFACTURER IS NOT RESPONSIBLE FOR QUALITY CONTROL IN THE TRUSS MANUFACTURING PLANT .

NAIL VALUES

PLATE	GRIP(DRY) (PSI) MAX	MIN	SHEAR (PLI) MAX	MIN	SECTION (PLI) MAX	MIN
MT20	618	354	1667	788	1987	1656

PLATE PLACEMENT TOL. = 0.250 inches

PLATE ROTATION TOL. = 5.0 Deg.

JSI GRIP= 0.28 (B) (INPUT = 0.90)
JSI METAL= 0.22 (B) (INPUT = 1.00)

JOB NAME	TRUSS NAME	QUANTITY	PLY	JOB DESC.	DRWG NO.
313989	P01		1	TRUSS DESC. JT-39002	E-19112503

Alpa Roof Truss, Maple

Version 8.300 S Aug 9 2019 MiTek Industries, Inc. Fri Nov 8 11:48:58 2019 Page 1
ID:VRLqmcIDifiZCj2mk6F92VyQuye-42VTTpO?vdeAAu2DVEIQJrprecPD2Nt_HXFC9AyLGU3

Scale = 1:17.2

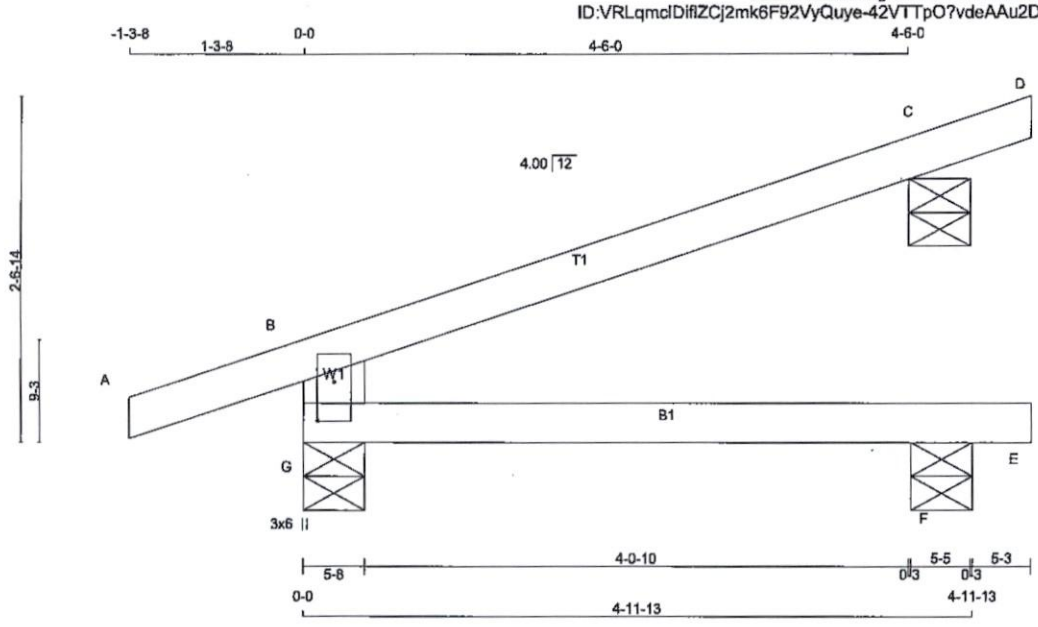

TOTAL WEIGHT = 7 X 15 = 104 lb [M]

LUMBER
N. L. G. A. RULES

CHORDS	SIZE		LUMBER	DESCR.
A - D	2x4	DRY	No.2	SPF
G - B	2x6	DRY	No.2	SPF
G - E	2x4	DRY	No.2	SPF

DRY: SEASONED LUMBER.

PLATES (table is in inches)

JT	TYPE	PLATES	W	LEN	Y	X
B						
G						
G	TMBMV1+p	MT20	3.0	6.0	3.50	1.50

NOTE: Lateral brace(s) shown shall be 2x4 SPF #2

LICENSED PROFESSIONAL ENGINEER
11/08/2019
R. TURENNE
100157040
PROVINCE OF ONTARIO

DIMENSIONS, SUPPORTS AND LOADINGS SPECIFIED BY FABRICATOR TO BE VERIFIED BY BUILDING DESIGNER

BEARINGS

JT	FACTORED GROSS REACTION VERT	HORZ	MAXIMUM FACTORED GROSS REACTION DOWN	HORZ	UPLIFT	INPUT BRG IN-SX	REQRD BRG IN-SX
G	419	0	419	0	0	5-8	1-8
F	46	0	52	0	0	5-8	1-8
C	212	0	212	0	0	5-8	5-8

BEVELED PLATE OR SHIM REQUIRED TO PROVIDE FULL BEARING SURFACE WITH TRUSS CHORD AT JT(S): C

UNFACTORED REACTIONS

JT	1ST LCASE COMBINED	MAX./MIN. COMPONENT REACTIONS SNOW	LIVE	PERM.LIVE	WIND	DEAD	SOIL
G	295	200 / 0	0 / 0	0 / 0	0 / 0	95 / 0	0 / 0
F	37	0 / 0	0 / 0	0 / 0	0 / 0	37 / 0	0 / 0
C	147	117 / 0	0 / 0	0 / 0	0 / 0	30 / 0	0 / 0

BEARING MATERIAL TO BE SPF NO.2 OR BETTER AT JOINT(S) G, F, C

BRACING
TOP CHORD TO BE SHEATHED OR MAX. PURLIN SPACING = 6.25 FT.
MAX. UNBRACED BOTTOM CHORD LENGTH = 10.00 FT OR RIGID CEILING DIRECTLY APPLIED.

ALL PITCH BREAKS AND PERIMETER CORNER JOINTS MUST BE LATERALLY RESTRAINED.

LOADING
TOTAL LOAD CASES: (4)

CHORDS

MEMB. FR-TO	MAX. FACTORED FORCE (LBS)	FACTORED VERT. LOAD LC1 (PLF) FROM	TO	MAX CSI (LC)	MAX. UNBRAC LENGTH
A- B	0 / 18	-84.9	-84.9	0.11 (1)	10.00
B- C	-16 / 0	-84.9	-84.9	0.32 (1)	6.25
C- D	-10 / 0	-84.9	-84.9	0.03 (1)	10.00
G- B	-365 / 0	0.0	0.0	0.06 (4)	7.81
G- F	0 / 0	-18.5	-18.5	0.11 (4)	10.00
F- E	0 / 0	-18.5	-18.5	0.01 (4)	10.00

WEBS

MEMB. FR-TO	MAX. FACTORED FORCE (LBS)	MAX CSI (LC)

DESIGN CRITERIA

SPECIFIED LOADS:

TOP CH.	LL =	23.3	PSF
	DL =	6.0	PSF
BOT CH.	LL =	0.0	PSF
	DL =	7.4	PSF
TOTAL LOAD	=	36.7	PSF

SPACING = 24.0 IN. C/C

THIS TRUSS IS DESIGNED FOR RESIDENTIAL OR SMALL BUILDING REQUIREMENTS OF PART 9, NBCC 2010, NBCC 2015

THIS DESIGN COMPLIES WITH:
- PART 9 OF BCBC 2018 , OBC 2012 , ABC 2019
- CSA 086-09, CSA 086-14
- TPIC 2011, TPIC 2014

DESIGN ASSUMPTIONS
-OVERHANG NOT TO BE ALTERED OR CUT OFF.

(55 % OF 27.2 P.S.F. G.S.L. PLUS 8.4 P.S.F. RAIN LOAD) EQUALS 23.3 P.S.F. SPECIFIED ROOF LIVE LOAD

ALLOWABLE DEFL.(LL)= L/360 (0.19")
CALCULATED VERT. DEFL.(LL) = L/ 999 (0.00")
ALLOWABLE DEFL.(TL)= L/360 (0.19")
CALCULATED VERT. DEFL.(TL) = L/ 999 (0.01")

CANTILEVER DEFLECTION:
ALLOWABLE DEFL.(TL)= L/120 (0.19")
CALCULATED VERT. DEFL.(TL) = L/ 999 (0.00")

CSI: TC=0.32/1.00 (B-C:1) , BC=0.11/1.00 (F-G:4) , WB=0.00/1.00 (n/a:0) , SSI=0.19/1.00 (B-C:1)

DOL LUMBER=1.00 NAIL=1.00 LS BEND=1.10 COMP=1.10 SHEAR=1.10 TENS= 1.10

COMPANION LIVE LOAD FACTOR = 1.00

AUTOSOLVE RIGHT HEEL ONLY

TRUSS PLATE MANUFACTURER IS NOT RESPONSIBLE FOR QUALITY CONTROL IN THE TRUSS MANUFACTURING PLANT .

NAIL VALUES

PLATE	GRIP(DRY) (PSI) MAX	MIN	SHEAR (PLI) MAX	MIN	SECTION (PLI) MAX	MIN
MT20	618	354	1667	788	1987	1656

PLATE PLACEMENT TOL. = 0.250 inches

PLATE ROTATION TOL. = 5.0 Deg.

JSI GRIP= 0.21 (G) (INPUT = 0.90)
JSI METAL= 0.07 (G) (INPUT = 1.00)

May 27, 2019

Re: Expiration Date for Technical Bulletins Extended to 12/31/2019

Please be advised that the expiration date of the Technical Bulletins listed below has been extended until December 31, 2019.

T-SPECCP17	T-SPECH17	T-SPECDSHGUS17R
T-SPECHGUS17-R	T-SPECHHUS17-R	T-SPECHUS17
T-SPECLF17	T-SPECLT17	T-SPECLU17
T-SPECCLUL17	T-SPECLUS17	T-SPECSUR17
T-SPECTBE17	T-SPECTC17	T-SPECTHGB17
T-SPECTHGBHV17	T-SPECTHGQ17	T-SPECTHGW17
T-SPECLSULSSU17	T-SPECHTHGQ17	T-SPECSTHGQ17

Should you have any questions or concerns regarding the above, please contact me at your convenience.

Sincerely,

Brent Bunting, P.Eng.
Simpson Strong-Tie Canada, Ltd.

LICENSED PROFESSIONAL ENGINEER
5/28/2019
B. D. BUNTING
PROVINCE OF ONTARIO

LUS – Double Shear Joist Hangers

SIMPSON Strong-Tie®

All LUS hangers have double shear nailing. This patented innovation distributes the load through two points on each joist nail for greater strength. It also allows the use of fewer nails, faster installation and the use of common nails for all connections.

Material: 18 gauge

Finish: G90 galvanized

Design:

- Factored resistances are in accordance with CSA O86-14.
- Uplift resistances have been increased 15%. No further increase is permitted.
- Wood shear is not considered in the factored resistances given. The specifier must ensure that the joist and header capacities are capable of withstanding these loads.

Installation:

- Use all specified fasteners.
- Nails: 16d = 0.162" dia. x 3½" long common wire, 10d = 0.148" x 3" long common wire.
- Double shear nails must be driven at an angle through the joist or truss into the header to achieve the table loads.
- Not designed for welded or nailer applications.

Options:

- These hangers cannot be modified

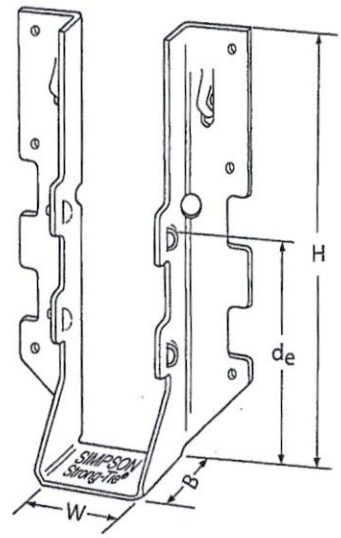

LUS28

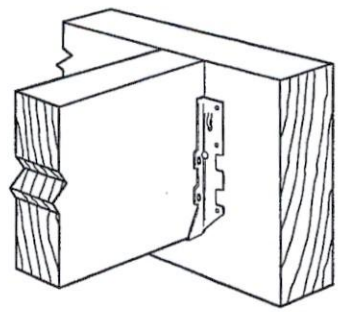

Typical LUS Installation

Model No.	Ga.	Dimensions (in.)				Fasteners		Factored Resistance (lb.)			
								D.Fir-L		S-P-F	
		W	H	B	d_e[1]	Face	Joist	Uplift (K_D=1.15)	Normal (K_D=1.00)	Uplift (K_D=1.15)	Normal (K_D=1.00)
LUS24	18	1 9/16	3 1/8	1 3/4	1 15/16	(4) 10d	(2) 10d	710	1630	645	1155
LUS24-2	18	3 1/8	3 1/8	2	1 13/16	(4) 16d	(2) 16d	835	2020	590	1435
LUS26	18	1 9/16	4 3/4	1 3/4	3 5/8	(4) 10d	(4) 10d	1420	2170	1290	1630
LUS26-2	18	3 1/8	4 7/8	2	4	(4) 16d	(4) 16d	1720	2595	1545	1920
LUS26-3	18	4 5/8	4 3/16	2	3 1/4	(4) 16d	(4) 16d	1720	2595	1545	2340
LUS28	18	1 9/16	6 5/8	1 3/4	3 3/4	(6) 10d	(6) 10d	1420	2520	1290	1790
LUS28-2	18	3 1/8	7	2	4	(6) 16d	(4) 16d	1720	3325	1545	2575
LUS28-3	18	4 5/8	6 1/4	2	3 1/4	(6) 16d	(4) 16d	1720	3325	1545	2375
LUS210	18	1 9/16	7 13/16	1 3/4	3 7/8	(8) 10d	(4) 10d	1420	2785	1290	2210
LUS210-2	18	3 1/8	9	2	6	(8) 16d	(6) 16d	2580	4500	2320	3195
LUS210-3	18	4 5/8	8 3/16	2	5 1/4	(8) 16d	(6) 16d	2580	3345	2320	2375

1. d_e is the distance from the seat of the hanger to the highest joist nail.

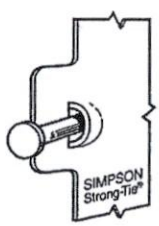

Dome Double Shear Nailing prevents tabs breaking off (available on some models).

U.S. Patent 5,603,580

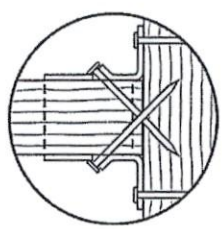

Double Shear Nailing Top View.

LICENSED PROFESSIONAL ENGINEER
4/5/2017
B. D. BUNTING
PROVINCE OF ONTARIO

LIMIT STATES DESIGN

This technical bulletin is effective until June 30, 2019, and reflects information available as of March 1, 2017. This information is updated periodically and should not be relied upon after June 30, 2019. Contact Simpson Strong-Tie for current information and limited warranty or see strongtie.com.

© 2017 Simpson Strong-Tie Company Inc.

(800) 999-5099
strongtie.com

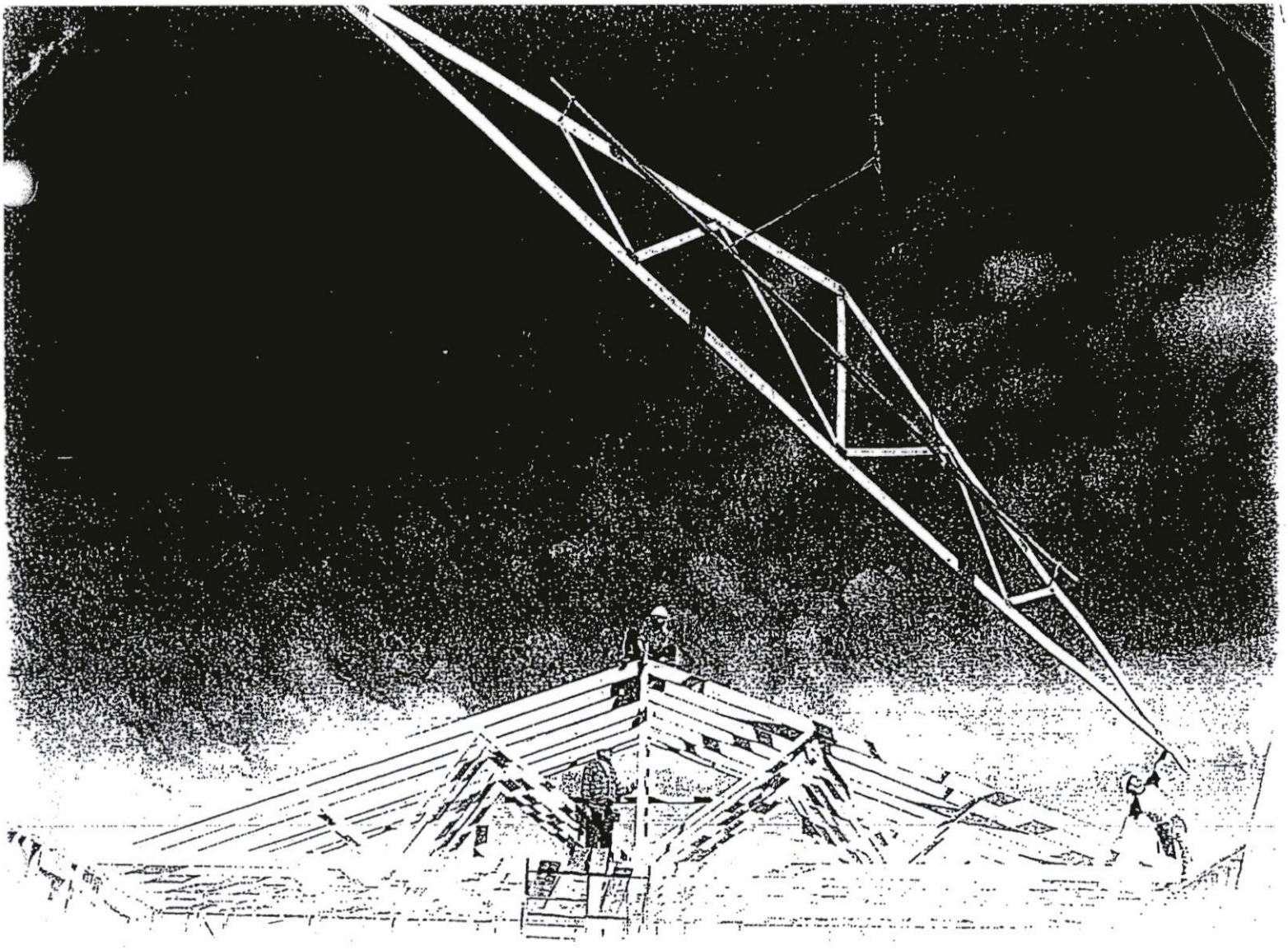

Wood Truss Installation

A Guide to proper handling, erecting and bracing metal plate connected wood trusses

Table of Content

Warning.....4

1 Unloading & Lifting.....5

2 Job Site Handling.....5

3 Hoisting.....6

4 Beginning the Erection Process.....7

5 Erection Tolerance.....8

6 Bracing.....8

7 Bracing Requirements for 3 Planes of Roof.....9

8 Stacking Materials.....10

Caution Notes.....11

Warning

General

Familiarity with the **Construction Design Documents**, the **Truss Design Drawings**, and **Truss Placement Plans** (if required by the **Construction Design Documents**) is required to properly erect, brace, and connect the trusses to the building system.

All of the care and quality involved in the design and manufacture of wood trusses can be jeopardized if the trusses are not properly handled, erected, and braced.

The consequences of improper handling, erecting, and bracing may be a collapse of the structure, which at best is a substantial loss of time and materials, and at worst is a loss of life. The majority of truss accidents occur during truss installation and not as a result of improper design or manufacture.

Prior to truss erection, the builder/erector shall meet with the erection crew for a safety and planning meeting, making sure each crew member understands his or her roles and responsibilities during the erection process.

Temporary Erection Bracing

Trusses are not marked in any way to identify the frequency, or location of temporary erection bracing.

All temporary bracing shall comply with the latest edition of *Commentary and Recommendations for Handling, Installing & Bracing Metal Plate Connected Wood Trusses* (HIB), published by the Truss Plate Institute, and/or as specified in the **Construction Design Documents** prepared by the building designer.

Permanent Truss Bracing

Permanent bracing for the roof or floor trusses is the responsibility of the building designer and should be shown on the **Construction Design Documents**. Permanent bracing locations for individual compression members of a wood truss are shown on the **Truss Design Drawings**, and shall be installed by the building or erection contractor. This bracing is needed for the proper performance of individual trusses within the roof or floor system. The design and connection of the bracing to the truss and then to the overall building system is the responsibility of the building designer, and is in addition to the permanent bracing plan, which is also specified by the building designer.

Special Design Requirements

Special design requirements, such as wind bracing, portal bracing, seismic bracing, diaphragms, shear walls, or other load transfer elements and their connections to wood trusses must be considered separately by the building designer, who shall determine size, location, and method of connections for all bracing as needed to resist these forces.

1 Unloading & Lifting

Never handle trusses flat

Beginning with the unloading process, and throughout all phases of construction, care must be taken to avoid **lateral bending** of trusses, which can cause damage to the lumber and metal connector plates at the joints.

Avoid lateral bending

- **Use special care in windy weather.**
- **If using a crane within 10 feet of an electric line, contact the local power company.**
- **If using a crane within 5 miles of an airport, contact the airport 30 days prior to erection to learn about any safety regulations that must be followed.**

2 Job Site Handling

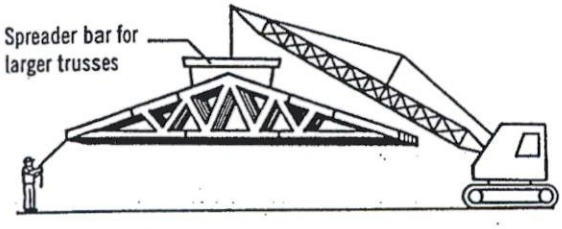

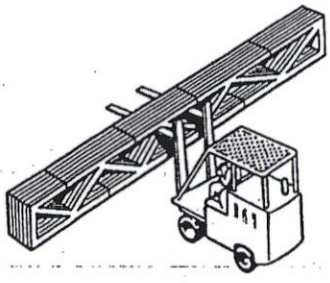

All trusses should be picked up at the top chords in a vertical position only

Proper banding and smooth ground allow for unloading of trusses without damage. This should be done as close to the building site as possible to minimize handling. **Do not** break banding until installation begins. Hand erection of trusses is allowed, provided excessive lateral bending is prevented.

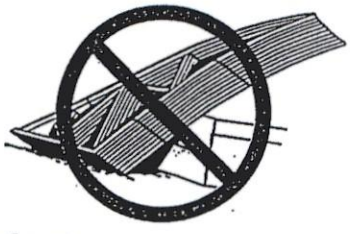

Do not store unbraced bundles upright

If trusses are stored vertically they shall be braced in a manner that will prevent tipping or topping. Generally cuting of the banding is done just prior to installation.

Do not store on uneven ground

If trusses are stored horizontally, blocking should be used on eight to ten foot centers, or as required, to minimize lateral bending and moisture gain.

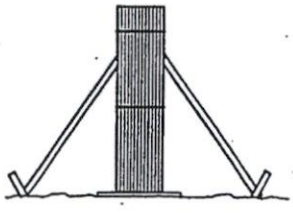

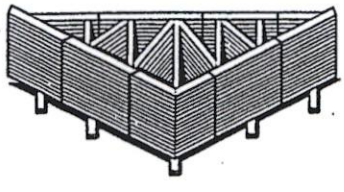

Care should be exercised when removing banding to avoid damaging trusses.

During long term storage, trusses shall be protected from the environment in a manner that provides for adequate ventilation of the trusses. If tarpaulins or other material is used, the ends shall be left open for ventilation. Plastic is not recommended, since it can trap moisture.

3 Hoisting

All trusses that are erected one at a time shall be held safely in position by the erection equipment until such time as all necessary bracing has been installed and the ends of the trusses are securely fastened to the building.

Avoid lateral bending

L ≤ 30'

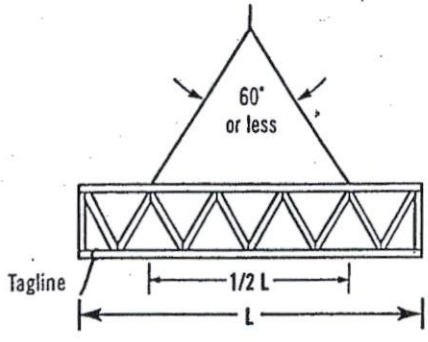

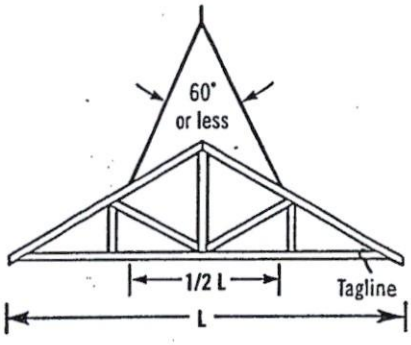

Truss sling is acceptable where these criteria are met.

30' < L ≤ 60'

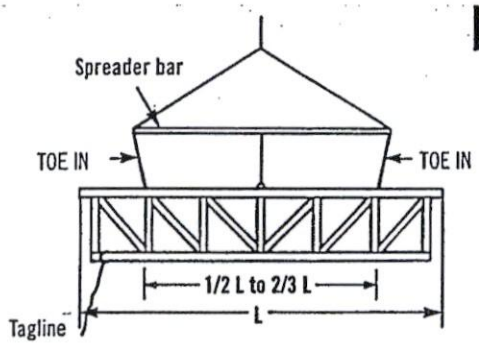

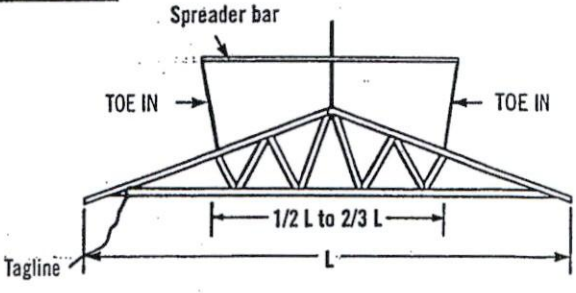

Use spreader bar in all other cases. It should be noted that the lines from the ends of the spreader bar **"TOE IN"**; if these lines should **"TOE OUT"** the truss may fold in half.

L > 60'

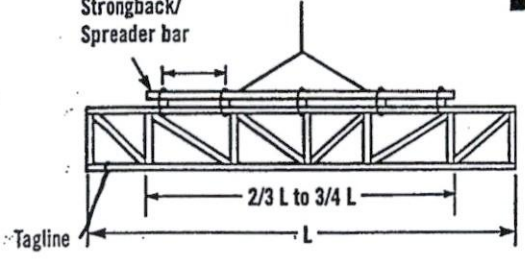

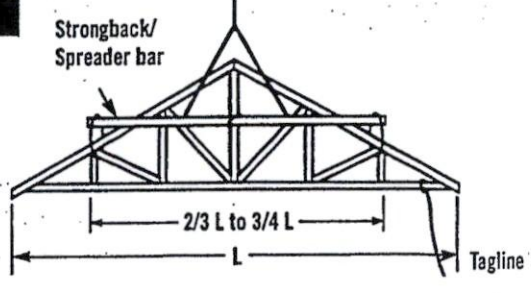

For lifting trusses with spans in excess of 60 feet, it is recommended that a strongback/spreader bar be used as illustrated. The strongback/spreader bar should be attached to the top chord and web members at intervals of approximately 10 feet. Further, the strongback/spreader bar should be at or above the mid-height of the truss to prevent overturning. The strongback/spreader bar can be of any material with sufficient strength to safely carry the weight of the truss and sufficient rigidity to adequately resist bending of the truss.

4 Beginning the Erection Process

It is important for the builder or erection contractor to provide substantial bracing for the first truss erected. The two or more trusses making up the rest of the first set are tied to and rely upon the first truss for stability. Likewise, after this first set of trusses is adequately cross-braced, the remaining trusses installed rely upon this first set for stability. Thus, the performance of the truss bracing system depends to a great extent on how well the first group of trusses is braced.

Ground Brace – Exterior

One satisfactory method ties the first unit of trusses off to a series of braces that are attached to a stake driven into the ground and securely anchored. The ground brace itself should be supported as shown below or it is apt to buckle. Additional ground braces in the opposite direction, inside the building, are also recommended.

Ground Brace – Interior

Another satisfactory method where height of building or ground conditions prohibit bracing from the exterior is to tie the first truss rigidly in place from the interior at the floor level, provided the floor is substantially completed and capable of supporting the ground bracing forces. Securely fasten the first truss to the middle of the building. Brace the bracing similar to exterior ground bracing shown at left. Set trusses from the middle toward the end of the building. Properly cross-brace the first set of trusses before removing floor braces and setting remaining trusses.

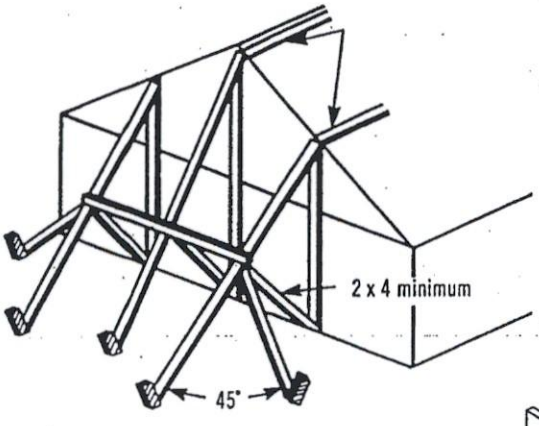

Note: Locate ground braces for first truss directly in line with all rows of top chord continuous lateral bracing (either temporary or permanent).

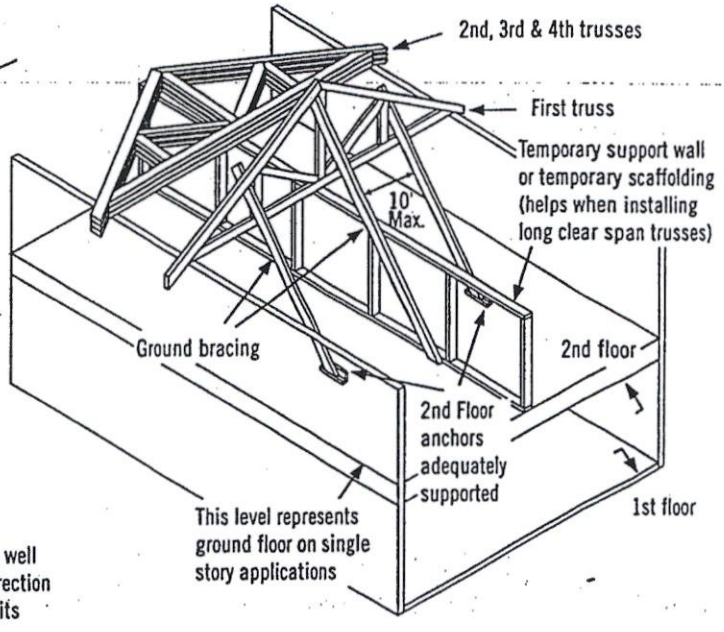

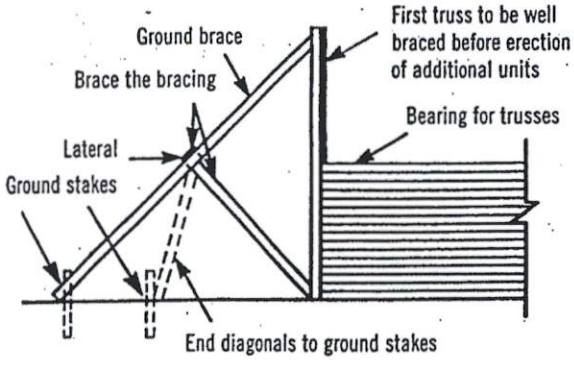

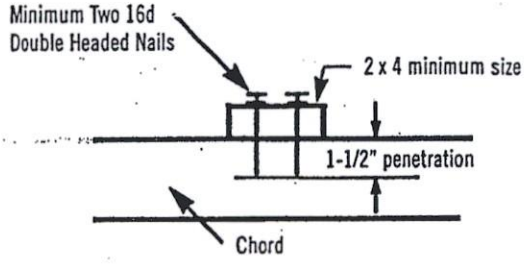

Inadequate size of bracing material or inadequate fastening is a major cause of erection dominoing.

5 Erection Tolerance

Complying with erection tolerances is critical to achieving an acceptable roof or floor line, and to accomplishing effective bracing. Setting trusses within tolerance the first time will prevent the need for the hazardous practice of respacing or adjusting trusses when roof sheathing or roof purlins are installed. Trusses leaning or bowing can cause nails to miss the top chords when sheathing is applied, and create cumulative stresses on the bracing, which is a frequent cause of dominoing.

When sheathing, make sure nails are driven into the top chord of the trusses.

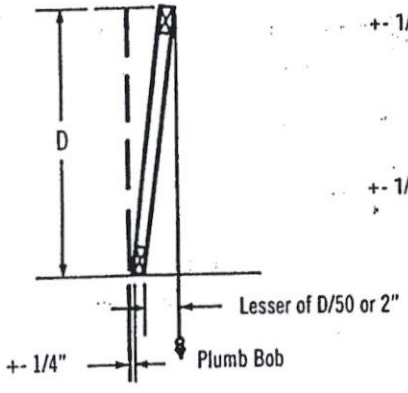

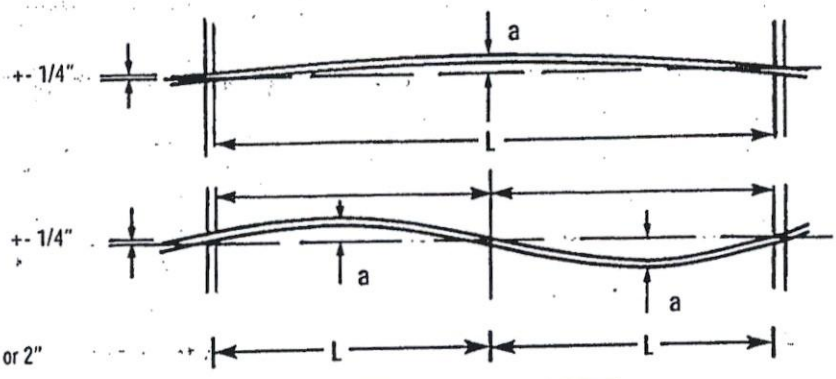

L = 16' to 32', a = 1"
L = 32' & over, a = 2"

6 Bracing

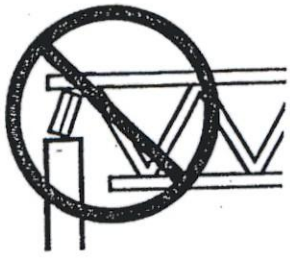

Do not install trusses on temporarily connected supports

Do not walk on unbraced trusses

Do not walk on trusses or gable ends lying flat

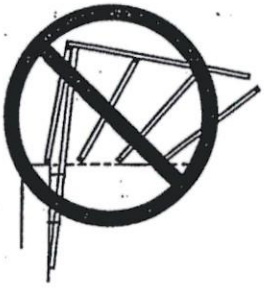

Nails in withdrawal (parallel to force)

All anchors, hangers, tie-downs, seats, bearing ledgers, etc., that are part of the supporting structure shall be accurately and properly placed and permanently attached before truss installation begins. No trusses shall ever be installed on anchors or ties that have temporary connections to the supporting structure.

Nailing scabs to the end of the building to brace the first truss is not recommended.
All nailing of bracing should be done so that nails are driven perpendicular to the direction of force, as shown at right.

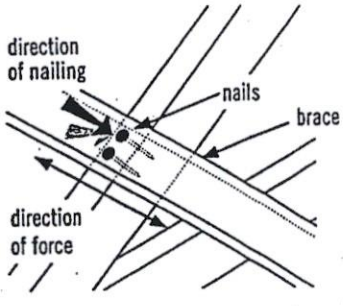

Well nailed (perpendicular to force)

7 Bracing Requirements for 3 Planes of Roof

Temporary erection bracing must be applied to three planes of the roof system to ensure stability: Plane 1) **Top Chord** (sheathing), Plane 2) **Bottom Chord** (ceiling plane), and Plane 3) **Web Member** plane or vertical plane perpendicular to trusses.

1) Top Chord Plane

Most important to the builder or erection contractor is bracing in the plane of the top chord. Truss top chords are susceptible to lateral buckling before they are braced or sheathed.

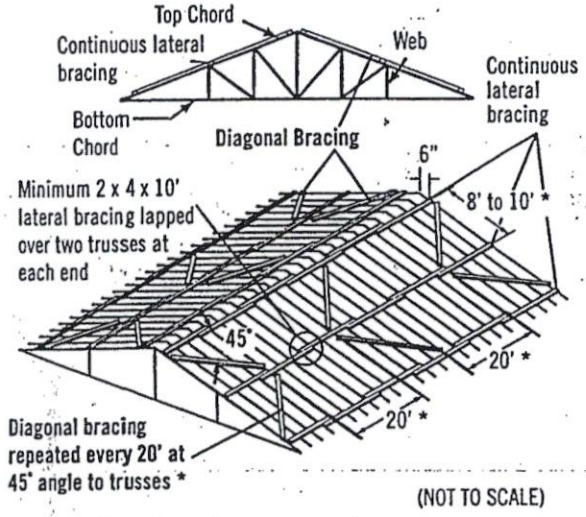

(NOT TO SCALE)

Exact spacing between trusses should be maintained as bracing is installed to avoid the hazardous practice of removing bracing to adjust spacing. This act of "adjusting spacing" can cause trusses to topple if connections are removed at the wrong time.

2) Bottom Chord Plane

In order to hold proper spacing on the bottom chord, temporary bracing is recommended on the top of the bottom chord.

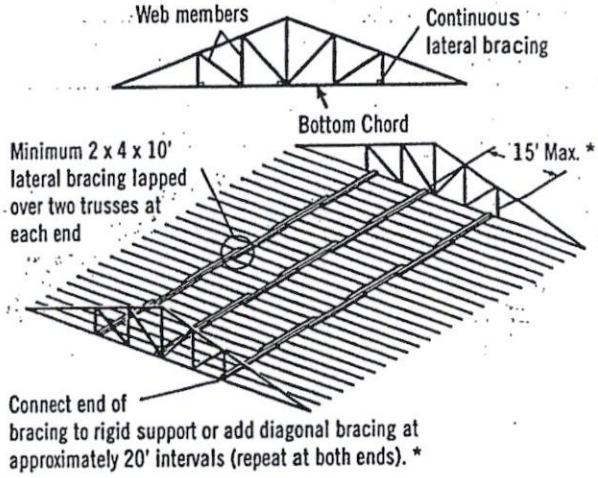

* Long spans, heavy loads or other spacing configurations may require closer spacing between lateral bracing and closer intervals between diagonals. Consult the building designer or HIB and DSB (*Recommended Design Specification for Temporary Bracing of Metal-Plate Connected Wood Trusses*) for details.

Diagonal or cross-bracing is very important!

3) Web Member Plane

"X" bracing, as shown, is critical in preventing trusses from leaning or dominoing. Repeat as shown to create a succession of rigid units.

X-bracing should be installed on vertical web members wherever possible, at or near lateral bracing. Plywood or OSB may be substituted for X-bracing.

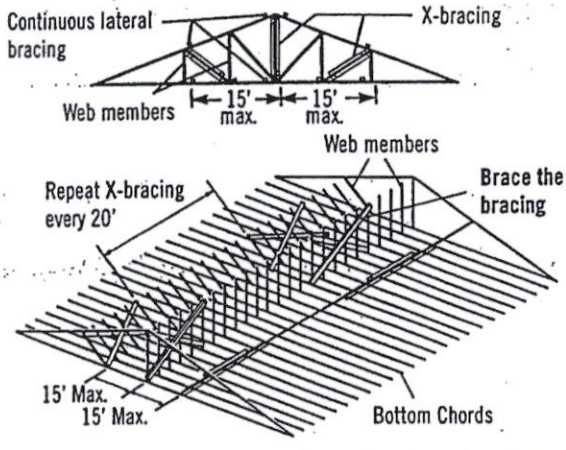

Note: Top chords and some web members are not shown, in order to make drawings more readable.

Do not use short blocks to brace individual trusses without a specific bracing plan detailing their use

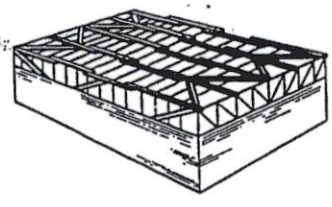

Bracing requirements using the same principles apply to parallel chord trusses

8 Stacking Materials

Do not proceed with building completion until all bracing is securely and properly in place

Never stack materials on unbraced or inadequately braced trusses

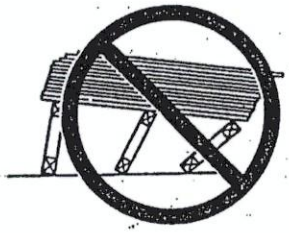

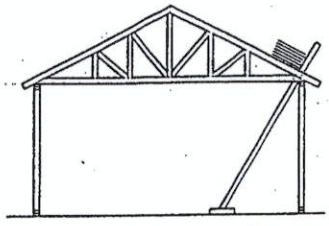

Proper distribution of construction materials is a must during construction.

Never stack materials near a peak

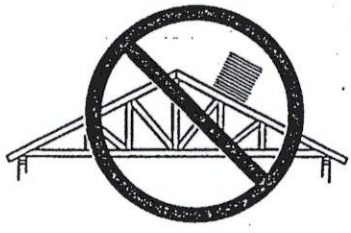

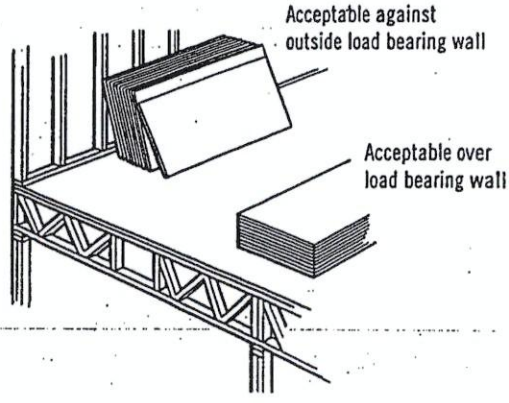

Never stack materials on the cantilever of a truss

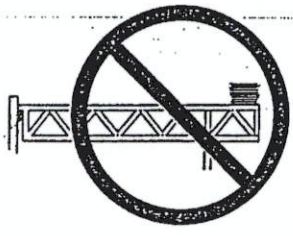

Always stack materials over two or more trusses.

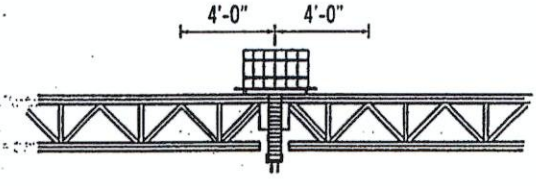

Never overload small groups or single trusses. Position load over as many trusses as possible.

Roofing and mechanical contractors are cautioned to stack materials only along outside supporting members or directly over inside supporting members. Trusses are not designed for dynamic loads (i.e., moving vehicles). Extreme care should be taken when loading and stacking construction materials (rolled roofing, mechanical equipment, etc.) on the roof or floor system.

Never cut any structural member of a truss.

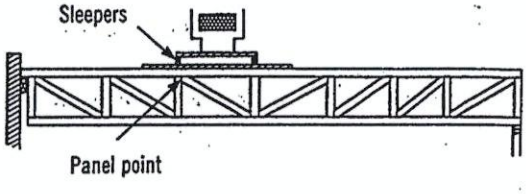

Sleepers for mechanical equipment should be located at panel points (joints) or over main supporting members, and only on trusses that have been designed for such loads.

Caution Notes

Errors in building lines and/or dimensions, or errors by others shall be corrected by the contractor or responsible construction trade subcontractor or supplier **before** erection of trusses begins.

Cutting of nonstructural overhangs is considered a part of normal erection and shall be done by the builder or erection contractor.

Any field modification that involves the cutting, drilling, or relocation of any structural truss member or connector plate shall not be done without the approval of the truss manufacturer or a licensed design professional.

The methods and procedures outlined are intended to ensure that the overall construction techniques employed will put floor and roof trusses **safely** in place in a completed structure. These recommendations for bracing wood trusses originate from the collective experience of leading technical personnel in the wood truss industry, but must, due to the nature of responsibilities involved, be presented only as a **guide** for use by a qualified building designer, builder, or erection contractor. Thus, the Wood Truss Council of America expressly disclaims any responsibility for damages arising from the use, application, or reliance on the recommendations and information contained herein.

[Selected text and figures referenced or reproduced from HIB and DSB by permission of the Truss Plate Institute, Madison, WI.]

THE CANADIAN WOOD TRUSS ASSOCIATION

L'ASSOCIATION CANADIENNE DES FABRICANTS DE FERMES DE BOIS

1400 Blair Place, Suite 210, Ottawa, ON K1J 9B8
Tel.: 613-747-5544 Fax: 613-747-6264

Wood Truss Council of America

One WTCA Center
6300 Enterprise Lane, Madison, WI 53719-1140
Tel.: 608-274-4849 Fax: 608-274-3329
wtca@woodtruss.com www.woodtruss.com

For conventional framing roof / ceilings framing shall conform to OBC.9.23

All work shall conform to the Ontario Building Code O. Reg. 332/12 as amended

ALPA-BARRIE

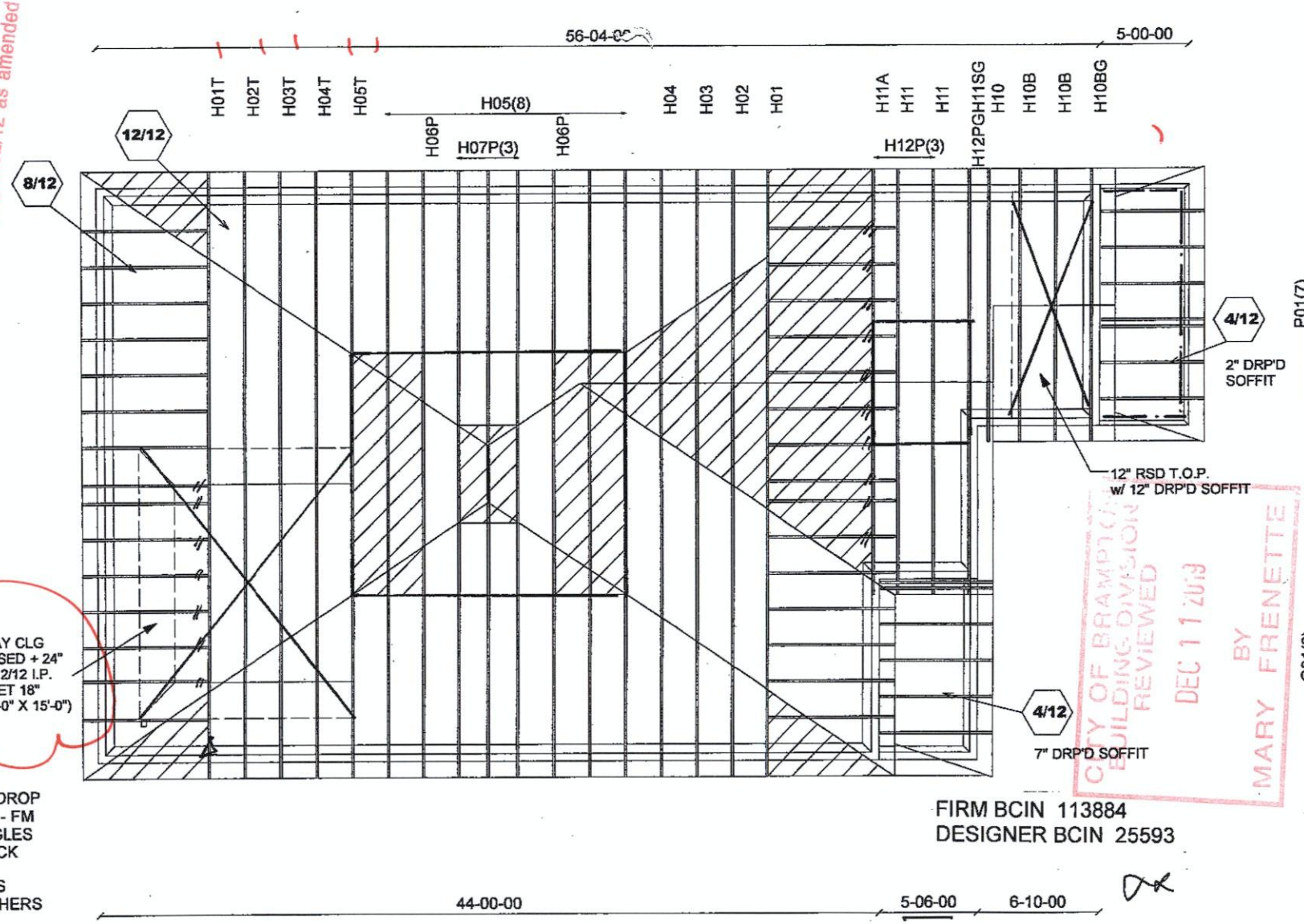

12" FIN. OH.
RSD. HEEL - 0" DROP
(2" x 6" FASCIA) - FM
ASPHALT SHINGLES
2" X 6" BRG/BRICK

PIGGYBACK TRS
PURLINS BY OTHERS

FIRM BCIN 113884
DESIGNER BCIN 25593

HANGERS
// LUS24
△TC26

CITY OF BRAMPTON BUILDING DIVISION REVIEWED DEC 11 2019 BY MARY FRENETTE

THE COPLAND

Mitek V. 8.2.0

ALL CONVENTIONAL FRAMING TO CONFORM WITH PART 9 O.B.C. LATEST EDITION. ROOF RAFTERS THAT CROSS OVER TRUSSES TO BE 2X4 SPF #2 @ 24" O.C WITH A VERT. POST TO THE TRUSS UNDERNEATH AT EACH CROSS POINT. VERT. POSTS LONGER THAN 6' TO HAVE LATERAL BRACING SO THAT THE DISTANCE BETWEEN END POINTS & BETWEEN ROWS OF BRACING DOES NOT EXCEED 6'

CONVENTIONAL FRAMING BY OTHERS

E19112486–E19112509

Job Track: 39002	Builder / Location: GOLD PARK HOMES / BRAMPTON	Model / Elevation: 38-10 REV1 / A OPT TRAY	
Layout ID: 314233	Project: MCLAUGHLIN AND MAYFIELD/ENCORE 2	THESE DRAWINGS CONSTITUTE THE PROPERTY OF ALPA ROOF TRUSSES INC., SHALL NOT BE REPRODUCED, PUBLISHED, OR REDISTRIBUTED IN ANY MANNER OR UTILIZED FOR ANY PURPOSE OTHER THAN THE MANUFACTURE OF TRUSSES BY ALPA ROOF TRUSSES INC AND WILL BE RETRACTED BY ALPA ROOF TRUSSES INC IF UTLILZED FOR ANY OTHER PURPOSE.	
Plan Log: 104619	Date: 2019-10-31 Designer: AMANDA		

EWP DESIGN INC.

(905) 832-2250 FAX (905) 832-0286

RESPONSIBILITIES AND SPECIFICATIONS

RESPONSIBILITIES

1. EWP DESIGN INC. is responsible for the design of trusses as individual components.
2. It is the responsibility of others to ascertain that the design loads utilized on each drawing meet or exceed the actual dead load imposed by the structure, the live load imposed by the intended use and the snow load imposed by local building code or authorities with jurisdictions.
3. All dimensions are to be verified by the owner, contractor, architect or other authorities with jurisdictions before truss fabrication.
4. EWP DESIGN INC. bears no responsibility for the erection of trusses. Persons erecting trusses are cautioned to seek professional advice regarding the temporary and permanent bracing for the system. Bracing shown on EWP DESIGN INC. drawing is specified for the truss as a component only and forms an integral part of the truss design.
5. It is the truss manufacturer's responsibility to ensure that trusses are manufactured in conformance with specifications of EWP DESIGN INC. as outlined below.

SPECIFICATIONS

1. Trusses designed by EWP DESIGN INC. conform to the relevant section of the Ontario Building Code of Canada (Part 9 or Part 4) or to the Canadian code for farm buildings, whichever applies to the building type, as indicated on the EWP DESIGN INC. drawings, and conform to the design procedures established by the Truss Plate Institute of Canada. Unit stresses used for truss designs are as per the edition of CSA-O86 shown on EWP DESIGN INC. drawings.
2. Lumber is to be the size, species and grade as specified on EWP DESIGN INC. drawings.
3. Moisture content of lumber shall not exceed 19% in service unless specified otherwise.
4. Metal connector plates shall be applied to both faces of truss at each joint and shall be positioned as specified.
5. Top chords of trusses are assumed to be continuously braced laterally by roof sheathing or by purlins at intervals not exceeding 12.5 times the thickness of top chord member.
6. Bottom chords shall be laterally braced at intervals not exceeding 3M (10') o.c., where rigid ceiling is not applied directly to the underside of chords.

THESE DRAWINGS CONSTITUTE THE PROPERTY OF EWP DESIGN INC., SHALL NOT BE REPRODUCED, PUBLISHED, OR REDISTRIBUTED IN ANY MANNER OR UTILIZED FOR ANY PURPOSE OTHER THAN THE MANUFACTURE OF TRUSSES BY THE ALPA LUMBER GROUP, AND WILL BE RETRACTED BY EWP DESIGN INC. IF UTILIZED FOR ANY OTHER PURPOSE.

JOB NAME	TRUSS NAME	QUANTITY	PLY	JOB DESC.	DRWG NO.
313989	G01	1	1	TRUSS DESC. JT-39002	E-19112486

Alpa Roof Truss, Maple

Version 8.300 S Aug 9 2019 MiTek Industries, Inc. Fri Nov 8 11:48:31 2019 Page 1
ID:VRLqmclDiflZC|2mk6F92VyQuye-MsNGob33GKE0RkU1Q3m5j8CFxk9SD9C03qCGiEyLGUU

Scale = 1:15.8

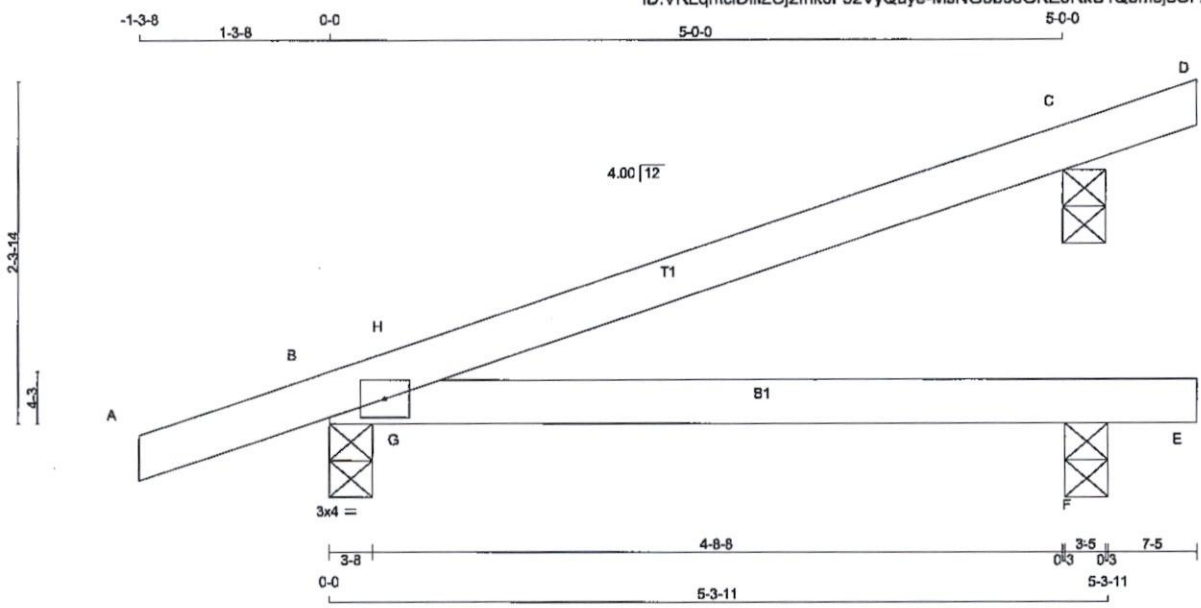

TOTAL WEIGHT = 6 X 16 = 93 lb

[M]

LUMBER

N. L. G. A. RULES

CHORDS	SIZE		LUMBER	DESCR.
A - D	2x4	DRY	No.2	SPF
B - E	2x4	DRY	No.2	SPF

DRY: SEASONED LUMBER.

PLATES (table is in inches)

JT	TYPE	PLATES	W	LEN	Y	X
B	TMB1-I	MT20	3.0	4.0		

NOTE: Lateral brace(s) shown shall be 2x4 SPF #2

LICENSED PROFESSIONAL ENGINEER
11/08/2019
R. TURENNE
100157040
PROVINCE OF ONTARIO

DIMENSIONS, SUPPORTS AND LOADINGS SPECIFIED BY FABRICATOR TO BE VERIFIED BY BUILDING DESIGNER

BEARINGS

JT	FACTORED GROSS REACTION VERT	HORZ	MAXIMUM FACTORED GROSS REACTION DOWN	HORZ	UPLIFT	INPUT BRG IN-SX	REQRD BRG IN-SX
B	380	0	380	0	0	3-8	1-8
F	89	0	89	0	0	3-8	1-8
C	260	0	260	0	0	3-8	3-8

BEVELED PLATE OR SHIM REQUIRED TO PROVIDE FULL BEARING SURFACE WITH TRUSS CHORD AT JT(S): C

UNFACTORED REACTIONS

JT	1ST LCASE COMBINED	MAX./MIN. COMPONENT REACTIONS SNOW	LIVE	PERM.LIVE	WIND	DEAD	SOIL
B	267	182 / 0	0 / 0	0 / 0	0 / 0	85 / 0	0 / 0
F	67	19 / 0	0 / 0	0 / 0	0 / 0	48 / 0	0 / 0
C	181	139 / 0	0 / 0	0 / 0	0 / 0	42 / 0	0 / 0

BEARING MATERIAL TO BE SPF NO.2 OR BETTER AT JOINT(S) B, F, C

BRACING

TOP CHORD TO BE SHEATHED OR MAX. PURLIN SPACING = 6.25 FT.
MAX. UNBRACED BOTTOM CHORD LENGTH = 10.00 FT OR RIGID CEILING DIRECTLY APPLIED.

ALL PITCH BREAKS AND PERIMETER CORNER JOINTS MUST BE LATERALLY RESTRAINED.

LOADING

TOTAL LOAD CASES: (4)

CHORDS

MEMB. FR-TO	MAX. FACTORED FORCE (LBS)	FACTORED VERT. LOAD (PLF) FROM	TO	LC1 MAX CSI (LC)	MAX. UNBRAC LENGTH
A- B	0 / 16	-84.9	-84.9	0.11 (1)	10.00
B- H	-19 / 10	-84.9	-84.9	0.06 (4)	6.25
H- C	-1 / 2	-84.9	-84.9	0.29 (1)	10.00
C- D	-11 / 0	-84.9	-84.9	0.04 (1)	6.25
B- G	0 / 0	-18.5	-18.5	0.20 (1)	10.00
G- F	0 / 0	-18.5	-18.5	0.21 (1)	10.00
F- E	0 / 0	-18.5	-18.5	0.01 (4)	10.00

WEBS

MEMB. FR-TO	MAX. FACTORED FORCE (LBS)	MAX CSI (LC)
G- H	-249 / 11	0.00 (1)

DESIGN CRITERIA

SPECIFIED LOADS:

TOP CH.	LL =	23.3	PSF
	DL =	6.0	PSF
BOT CH.	LL =	0.0	PSF
	DL =	7.4	PSF
TOTAL LOAD	=	36.7	PSF

SPACING = 24.0 IN. C/C

THIS TRUSS IS DESIGNED FOR RESIDENTIAL OR SMALL BUILDING REQUIREMENTS OF PART 9, NBCC 2010, NBCC 2015

THIS DESIGN COMPLIES WITH:
- PART 9 OF BCBC 2018 , OBC 2012 , ABC 2019
- CSA 086-09, CSA 086-14
- TPIC 2011, TPIC 2014

DESIGN ASSUMPTIONS
- PERCENTAGE OF GROUND SNOW LOAD IS USER-DEFINED.

(65 % OF 27.2 P.S.F. G.S.L. PLUS 8.4 P.S.F. RAIN LOAD) EQUALS 23.3 P.S.F. SPECIFIED ROOF LIVE LOAD

ALLOWABLE DEFL.(LL)= L/360 (0.19")
CALCULATED VERT. DEFL.(LL) = L/ 999 (0.04")
ALLOWABLE DEFL.(TL)= L/360 (0.19")
CALCULATED VERT. DEFL.(TL) = L/ 768 (0.08")

CANTILEVER DEFLECTION:
ALLOWABLE DEFL.(TL)= L/120 (0.19")
CALCULATED VERT. DEFL.(TL) = L/ 999 (0.00")

CSI: TC=0.29/1.00 (C-H:1) , BC=0.21/1.00 (F-G:1) , WB=0.00/1.00 (G-H:1) , SSI=0.21/1.00 (B-G:1)

DOL LUMBER=1.00 NAIL=1.00 LS BEND=1.10 COMP=1.10 SHEAR=1.10 TENS= 1.10

COMPANION LIVE LOAD FACTOR = 1.00

TRUSS PLATE MANUFACTURER IS NOT RESPONSIBLE FOR QUALITY CONTROL IN THE TRUSS MANUFACTURING PLANT .

NAIL VALUES

PLATE	GRIP(DRY) (PSI) MAX	MIN	SHEAR (PLI) MAX	MIN	SECTION (PLI) MAX	MIN
MT20	618	354	1667	788	1987	1656

PLATE PLACEMENT TOL. = 0.250 inches

PLATE ROTATION TOL. = 5.0 Deg.

JSI GRIP= 0.25 (B) (INPUT = 0.90)
JSI METAL= 0.07 (B) (INPUT = 1.00)

JOB NAME	TRUSS NAME	QUANTITY	PLY	JOB DESC.	DRWG NO.
313989	H01		1	TRUSS DESC. JT-39002	E-19112487

Alpa Roof Truss, Maple

Version 8.300 S Aug 9 2019 MiTek Industries, Inc. Fri Nov 8 11:48:34 2019 Page 1

ID:VRLqmcIDifIZCj2mk6F92VyQuye-nR3ORc5xYFcaICDc5CJoKnpgSx9oQL4SmoRwJZyLGUR

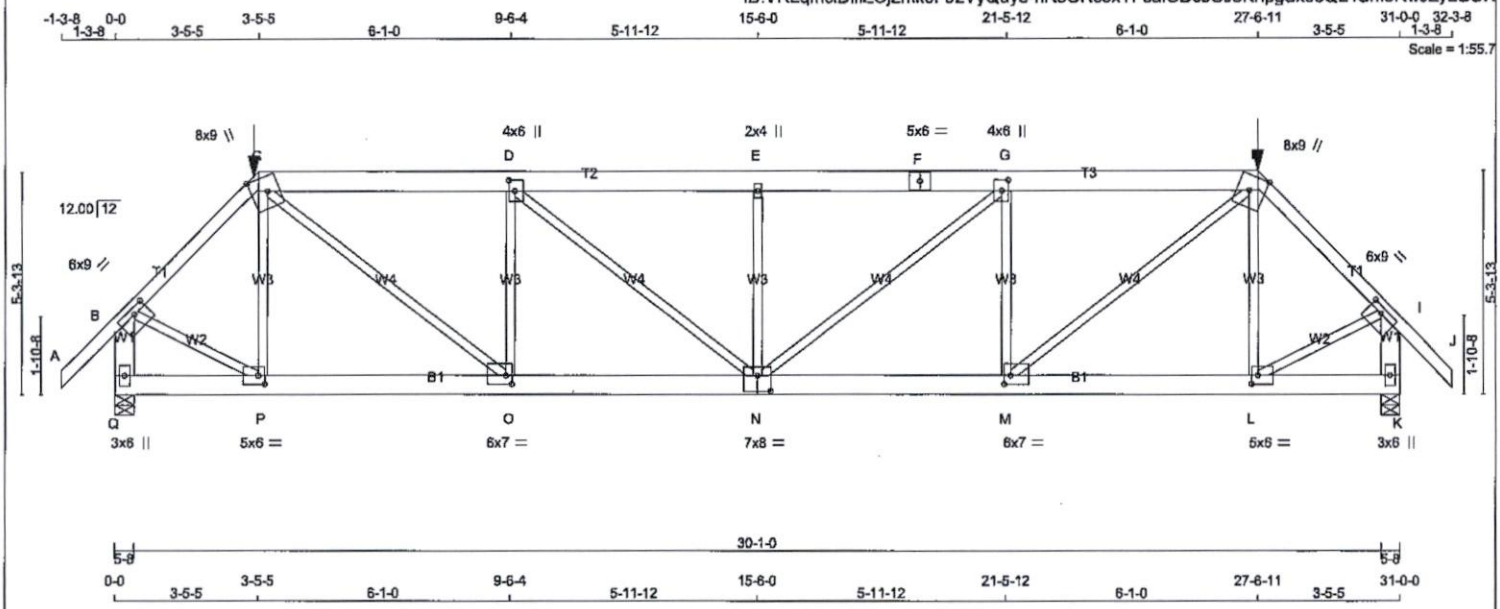

TOTAL WEIGHT = 2 X 167 = 334 lb

[M]

LUMBER

N. L. G. A. RULES

CHORDS	SIZE		LUMBER	DESCR.
A - C	2x4	DRY	No.2	SPF
C - F	2x6	DRY	No.2	SPF
F - H	2x6	DRY	No.2	SPF
H - J	2x4	DRY	No.2	SPF
Q - B	2x6	DRY	No.2	SPF
K - I	2x6	DRY	No.2	SPF
Q - N	2x6	DRY	2100F 1.8E	SPF
N - K	2x6	DRY	2100F 1.8E	SPF
ALL WEBS EXCEPT	2x3	DRY	No.2	SPF

DRY: SEASONED LUMBER.

PLATES (table is in inches)

JT	TYPE	PLATES	W	LEN	Y	X
B	TMVW-t	MT20	6.0	9.0	1.75	4.00
C	TTWW+m	MT20	8.0	9.0	Edge	4.50
D	TMWW+t	MT20	4.0	6.0	3.00	1.75
E	TMW+w	MT20	2.0	4.0		
F	TS-t	MT20	5.0	6.0		
G	TMWW+t	MT20	4.0	6.0	3.00	1.75
H	TTWW+m	MT20	8.0	9.0	Edge	4.50
I	TMVW-t	MT20	6.0	9.0	1.75	4.00
K	BMV1+p	MT20	3.0	6.0		
L	BMWW-t	MT20	5.0	6.0	2.50	1.75
M	BMWW-t	MT20	6.0	7.0	2.50	1.75
N	BSWWW-l	MT20	7.0	8.0	4.50	4.00
O	BMWW-t	MT20	6.0	7.0	2.50	1.75
P	BMWW-t	MT20	5.0	6.0	2.50	1.75
Q	BMV1+p	MT20	3.0	6.0		

Edge - INDICATES REFERENCE CORNER OF PLATE TOUCHES EDGE OF CHORD.

NOTE: Lateral brace(s) shown shall be 2x4 SPF #2

LICENSED PROFESSIONAL ENGINEER
11/08/2019
R. TURENNE
100157040
PROVINCE OF ONTARIO

DIMENSIONS, SUPPORTS AND LOADINGS SPECIFIED BY FABRICATOR TO BE VERIFIED BY BUILDING DESIGNER

BEARINGS

JT	FACTORED GROSS REACTION VERT	HORZ	MAXIMUM FACTORED GROSS REACTION DOWN	HORZ	UPLIFT	INPUT BRG IN-SX	REQRD BRG IN-SX
Q	3203	0	3203	0	0	5-8	3-0
K	3203	0	3203	0	0	5-8	3-0

UNFACTORED REACTIONS

MAX./MIN. COMPONENT REACTIONS

JT	1ST LCASE COMBINED	SNOW	LIVE	PERM.LIVE	WIND	DEAD	SOIL
Q	2272	1448 / 0	0 / 0	0 / 0	0 / 0	825 / 0	0 / 0
K	2272	1448 / 0	0 / 0	0 / 0	0 / 0	825 / 0	0 / 0

BEARING MATERIAL TO BE SPF NO.2 OR BETTER AT JOINT(S) Q, K

BEARING SIZE FACTOR = 1.15 AT JNT(S) Q, K (BASED ON SUPPORT DEPTH = 1-8)

BRACING

TOP CHORD TO BE SHEATHED OR MAX. PURLIN SPACING = 3.18 FT.

MAX. UNBRACED BOTTOM CHORD LENGTH = 10.00 FT OR RIGID CEILING DIRECTLY APPLIED.

ALL PITCH BREAKS AND PERIMETER CORNER JOINTS MUST BE LATERALLY RESTRAINED.

LOADING

TOTAL LOAD CASES: (4)

CHORDS

MEMB. FR-TO	MAX. FACTORED FORCE (LBS)	FACTORED VERT. LOAD LC1 (PLF) FROM	TO	MAX CSI (LC)	MAX. UNBRAC LENGTH
A- B	0 / 42	-84.9	-84.9	0.13 (1)	10.00
B- C	-2931 / 0	-84.9	-84.9	0.35 (1)	3.75
C- D	-4458 / 0	-167.1	-167.1	0.61 (1)	3.47
D- E	-5153 / 0	-167.1	-167.1	0.66 (1)	3.18
E- F	-5153 / 0	-167.1	-167.1	0.66 (1)	3.18
F- G	-5153 / 0	-167.1	-167.1	0.66 (1)	3.18
G- H	-4458 / 0	-167.1	-167.1	0.61 (1)	3.47
H- I	-2931 / 0	-84.9	-84.9	0.35 (1)	3.75
I- J	0 / 42	-84.9	-84.9	0.13 (1)	10.00
Q- B	-3176 / 0	0.0	0.0	0.25 (1)	5.89
K- I	-3176 / 0	0.0	0.0	0.25 (1)	5.89
Q- P	0 / 0	-36.4	-36.4	0.06 (4)	10.00
P- O	0 / 2063	-36.4	-36.4	0.16 (1)	10.00
O- N	0 / 4458	-36.4	-36.4	0.29 (1)	10.00
N- M	0 / 4458	-36.4	-36.4	0.29 (1)	10.00
M- L	0 / 2063	-36.4	-36.4	0.16 (1)	10.00
L- K	0 / 0	-36.4	-36.4	0.06 (4)	10.00

WEBS

MEMB. FR-TO	MAX. FACTORED FORCE (LBS)	MAX CSI (LC)
P- C	-613 / 0	0.23 (1)
C- O	0 / 3069	0.76 (1)
O- D	-1715 / 0	0.65 (1)
D- N	0 / 896	0.22 (1)
N- E	-921 / 0	0.35 (1)
N- G	0 / 896	0.22 (1)
M- G	-1715 / 0	0.65 (1)
M- H	0 / 3069	0.76 (1)
L- H	-613 / 0	0.23 (1)
B- P	0 / 2240	0.55 (1)
L- I	0 / 2240	0.55 (1)

FACTORED CONCENTRATED LOADS (LBS)

JT	LOC.	LC1	MAX-	MAX+	FACE	DIR.	TYPE	HEEL	CONN.
C	3-5-5	-213	-213	—	FRONT	VERT	TOTAL	—	C1
H	27-6-11	-213	-213	—	FRONT	VERT	TOTAL	—	C1

CONNECTION REQUIREMENTS

1) **C1:** A SUITABLE HANGER/MECHANICAL CONNECTION IS REQUIRED.

DESIGN CRITERIA

SPECIFIED LOADS:

TOP CH.	LL	=	23.3	PSF
	DL	=	6.0	PSF
BOT CH.	LL	=	0.0	PSF
	DL	=	7.4	PSF
TOTAL LOAD		=	36.7	PSF

SPACING = 24.0 IN. C/C

LOADING IN FLAT SECTION BASED ON A SLOPE OF 2.00/12 MINIMUM

GIRDER TYPE: CPrimeHip
SIDE SETBACK = 3-5-5
END SETBACK = 5-10-8
END WALL WIDTH = 0-0
CORNER FRAMING TYPE: CONVENTIONAL
END JACK TYPE: CONVENTIONAL
APPLIED TO FRONT SIDE
- ADDT'L LOADS BASED ON 55 % OF GSL.

THIS TRUSS IS DESIGNED FOR RESIDENTIAL OR SMALL BUILDING REQUIREMENTS OF PART 9, NBCC 2010, NBCC 2015

THIS DESIGN COMPLIES WITH:
- PART 9 OF BCBC 2018 , OBC 2012 , ABC 2019
- CSA 086-09, CSA 086-14
- TPIC 2011, TPIC 2014

(55 % OF 27.2 P.S.F. G.S.L. PLUS 8.4 P.S.F. RAIN LOAD) EQUALS 23.3 P.S.F. SPECIFIED ROOF LIVE LOAD

ALLOWABLE DEFL.(LL)= L/360 (1.03")
CALCULATED VERT. DEFL.(LL) = L/ 999 (0.18")
ALLOWABLE DEFL.(TL)= L/360 (1.03")
CALCULATED VERT. DEFL.(TL) = L/ 999 (0.33")

CSI: TC=0.66/1.00 (D-E:1) , BC=0.29/1.00 (N-O:1) , WB=0.76/1.00 (C-O:1) , SSI=0.40/1.00 (C-D:1)

DOL LUMBER=1.00 NAIL=1.00 LS BEND=1.00 COMP=1.00 SHEAR=1.00 TENS= 1.00

COMPANION LIVE LOAD FACTOR = 1.00

AUTOSOLVE HEELS OFF

TRUSS PLATE MANUFACTURER IS NOT RESPONSIBLE FOR QUALITY CONTROL IN THE TRUSS MANUFACTURING PLANT .

NAIL VALUES

PLATE	GRIP(DRY) (PSI) MAX	MIN	SHEAR (PLI) MAX	MIN	SECTION (PLI) MAX	MIN
MT20	618	354	1667	788	1987	1656

PLATE PLACEMENT TOL. = 0.250 inches

PLATE ROTATION TOL. = 5.0 Deg.

JSI GRIP= 0.73 (P) (INPUT = 0.90)
JSI METAL= 0.69 (N) (INPUT = 1.00)

JOB NAME	TRUSS NAME	QUANTITY	PLY	JOB DESC.	DRWG NO.
313989	H02		1	TRUSS DESC. JT-39002	E-19112488

Alpa Roof Truss, Maple

Version 8.300 S Aug 9 2019 MiTek Industries, Inc. Fri Nov 8 11:48:36 2019 Page 1

ID:VRLqmclDifIZCj2mk6F92VyQuye-jqA9rl7B4stlXVM?CcLGQCv1mlpUuJylD6w1NRyLGUP

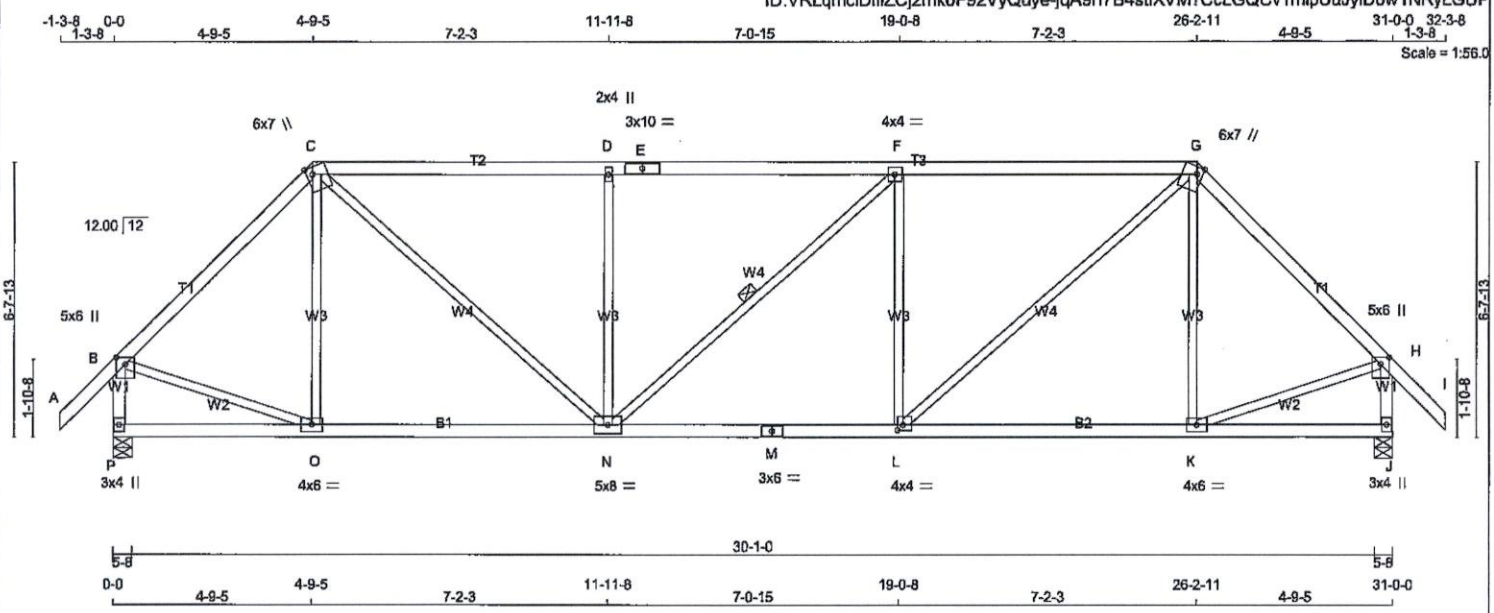

TOTAL WEIGHT = 2 X 133 = 266 lb [M]

LUMBER

N. L. G. A. RULES

CHORDS	SIZE		LUMBER	DESCR.
A - C	2x4	DRY	No.2	SPF
C - E	2x4	DRY	1650F 1.5E	SPF
E - G	2x4	DRY	1650F 1.5E	SPF
G - I	2x4	DRY	No.2	SPF
P - B	2x4	DRY	No.2	SPF
J - H	2x4	DRY	No.2	SPF
P - M	2x4	DRY	No.2	SPF
M - J	2x4	DRY	No.2	SPF
ALL WEBS EXCEPT	2x3	DRY	No.2	SPF

DRY: SEASONED LUMBER.

PLATES (table is in inches)

JT	TYPE	PLATES	W	LEN	Y	X
B	TMVW+p	MT20	5.0	6.0	2.00	2.50
C	TTWW+m	MT20	6.0	7.0	Edge	1.75
D	TMW+w	MT20	2.0	4.0		
E	TS-t	MT20	3.0	10.0		
F	TMWW-t	MT20	4.0	4.0		
G	TTWW+m	MT20	6.0	7.0	Edge	1.75
H	TMVW+p	MT20	5.0	6.0	2.00	2.50
J	BMV1+p	MT20	3.0	4.0		
K	BMWW-t	MT20	4.0	6.0		
L	BMWW-t	MT20	4.0	4.0	1.50	1.50
M	BS-t	MT20	3.0	6.0		
N	BMWWW-t	MT20	5.0	8.0		
O	BMWW-t	MT20	4.0	6.0		
P	BMV1+p	MT20	3.0	4.0		

Edge - INDICATES REFERENCE CORNER OF PLATE TOUCHES EDGE OF CHORD.

NOTE: Lateral brace(s) shown shall be 2x4 SPF #2

LICENSED PROFESSIONAL ENGINEER
11/08/2019
R. TURENNE
100157040
PROVINCE OF ONTARIO

DIMENSIONS, SUPPORTS AND LOADINGS SPECIFIED BY FABRICATOR TO BE VERIFIED BY BUILDING DESIGNER

BEARINGS

JT	FACTORED GROSS REACTION VERT	HORZ	MAXIMUM FACTORED GROSS REACTION DOWN	HORZ	UPLIFT	INPUT BRG IN-SX	REQRD BRG IN-SX
P	1720	0	1720	0	0	5-8	2-9
J	1720	0	1720	0	0	5-8	2-9

UNFACTORED REACTIONS

JT	1ST LCASE COMBINED	MAX./MIN. COMPONENT REACTIONS SNOW	LIVE	PERM.LIVE	WIND	DEAD	SOIL
P	1219	787 / 0	0 / 0	0 / 0	0 / 0	432 / 0	0 / 0
J	1219	787 / 0	0 / 0	0 / 0	0 / 0	432 / 0	0 / 0

BEARING MATERIAL TO BE SPF NO.2 OR BETTER AT JOINT(S) P, J

BRACING

TOP CHORD TO BE SHEATHED OR MAX. PURLIN SPACING = 4.69 FT.
MAX. UNBRACED BOTTOM CHORD LENGTH = 10.00 FT OR RIGID CEILING DIRECTLY APPLIED.

ALL PITCH BREAKS AND PERIMETER CORNER JOINTS MUST BE LATERALLY RESTRAINED.

1 LATERAL BRACE(S) AT 1/ 2 LENGTH OF F-N.

END VERTICAL(S) MUST BE SHEATHED OR HAVE BRACES AS INDICATED IN THE MAX. UNBRACED LENGTH COLUMN OF THE TABLE BELOW

LOADING

TOTAL LOAD CASES: (4)

CHORDS

MEMB. FR-TO	MAX. FACTORED FORCE (LBS)	FACTORED VERT. LOAD (PLF) FROM	TO	LC1	MAX CSI (LC)	MAX. UNBRAC LENGTH
A- B	0 / 42	-84.9	-84.9	0.12 (1)	10.00	
B- C	-1472 / 0	-84.9	-84.9	0.42 (1)	4.93	
C- D	-1927 / 0	-84.9	-84.9	0.60 (1)	4.70	
D- E	-1927 / 0	-84.9	-84.9	0.60 (1)	4.69	
E- F	-1927 / 0	-84.9	-84.9	0.60 (1)	4.69	
F- G	-1928 / 0	-84.9	-84.9	0.61 (1)	4.69	
G- H	-1472 / 0	-84.9	-84.9	0.42 (1)	4.93	
H- I	0 / 42	-84.9	-84.9	0.12 (1)	10.00	
P- B	-1689 / 0	0.0	0.0	0.19 (1)	6.39	
J- H	-1689 / 0	0.0	0.0	0.19 (1)	6.39	
P- O	0 / 0	-18.5	-18.5	0.16 (4)	10.00	
O- N	0 / 1035	-18.5	-18.5	0.27 (4)	10.00	
N- M	0 / 1928	-18.5	-18.5	0.41 (1)	10.00	
M- L	0 / 1928	-18.5	-18.5	0.41 (1)	10.00	
L- K	0 / 1034	-18.5	-18.5	0.27 (4)	10.00	
K- J	0 / 0	-18.5	-18.5	0.16 (4)	10.00	

WEBS

MEMB. FR-TO	MAX. FACTORED FORCE (LBS)	MAX CSI (LC)
O- C	-199 / 18	0.15 (1)
C- N	0 / 1190	0.27 (1)
N- D	-655 / 0	0.48 (1)
N- F	-1 / 0	0.00 (1)
L- F	-656 / 0	0.48 (1)
L- G	0 / 1191	0.27 (1)
K- G	-200 / 18	0.15 (1)
B- O	0 / 1087	0.24 (1)
K- H	0 / 1087	0.24 (1)

DESIGN CRITERIA

SPECIFIED LOADS:

TOP CH.	LL	=	23.3	PSF
	DL	=	6.0	PSF
BOT CH.	LL	=	0.0	PSF
	DL	=	7.4	PSF
TOTAL LOAD		=	36.7	PSF

SPACING = 24.0 IN. C/C

LOADING IN FLAT SECTION BASED ON A SLOPE OF 2.00/12 MINIMUM

THIS TRUSS IS DESIGNED FOR RESIDENTIAL OR SMALL BUILDING REQUIREMENTS OF PART 9, NBCC 2010, NBCC 2015

THIS DESIGN COMPLIES WITH:
- PART 9 OF BCBC 2018 , OBC 2012 , ABC 2019
- CSA 086-09, CSA 086-14
- TPIC 2011, TPIC 2014

(55 % OF 27.2 P.S.F. G.S.L. PLUS 8.4 P.S.F. RAIN LOAD) EQUALS 23.3 P.S.F. SPECIFIED ROOF LIVE LOAD

ALLOWABLE DEFL.(LL)= L/360 (1.03")
CALCULATED VERT. DEFL.(LL) = L/ 999 (0.08")
ALLOWABLE DEFL.(TL)= L/360 (1.03")
CALCULATED VERT. DEFL.(TL) = L/ 999 (0.17")

CSI: TC=0.61/1.00 (F-G:1) , BC=0.41/1.00 (L-N:1) , WB=0.48/1.00 (F-L:1) , SSI=0.28/1.00 (F-G:1)

DOL LUMBER=1.00 NAIL=1.00 LS BEND=1.10 COMP=1.10 SHEAR=1.10 TENS= 1.10

COMPANION LIVE LOAD FACTOR = 1.00

TRUSS PLATE MANUFACTURER IS NOT RESPONSIBLE FOR QUALITY CONTROL IN THE TRUSS MANUFACTURING PLANT .

NAIL VALUES

PLATE	GRIP(DRY) (PSI) MAX	MIN	SHEAR (PLI) MAX	MIN	SECTION (PLI) MAX	MIN
MT20	618	354	1667	788	1987	1656

PLATE PLACEMENT TOL. = 0.250 inches

PLATE ROTATION TOL. = 5.0 Deg.

JSI GRIP= 0.71 (P) (INPUT = 0.90)
JSI METAL= 0.66 (M) (INPUT = 1.00)

JOB NAME	TRUSS NAME	QUANTITY	PLY	JOB DESC.	DRWG NO.
313989	H03	1	1	TRUSS DESC. JT-39002	E-19112489

Alpa Roof Truss, Maple

Version 8.300 S Aug 9 2019 MiTek Industries, Inc. Fri Nov 8 11:48:37 2019 Page 1
ID:VRLqmclDifIZC|2mk6F92VyQuye-B0kX3e7prA?99fxBmKsVyPRDN8A_dj6uSmgbwtyLGUO

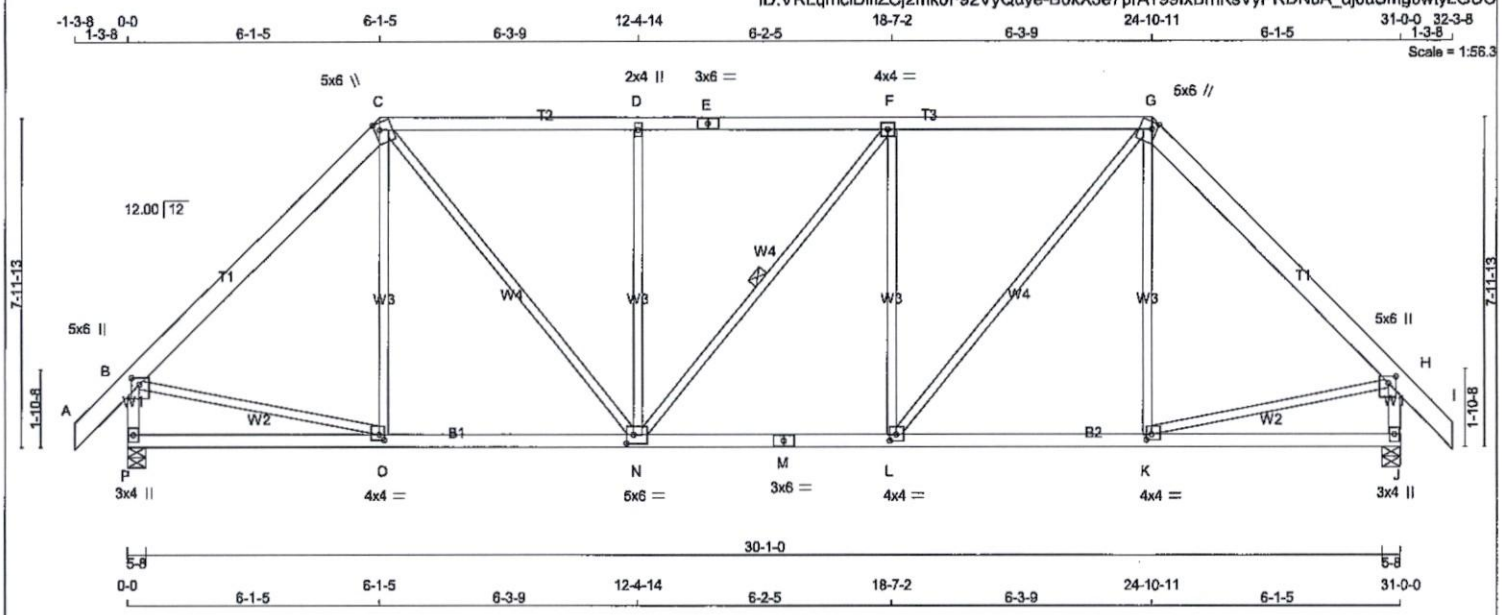

TOTAL WEIGHT = 2 X 156 = 312 lb [M]

LUMBER

N. L. G. A. RULES

CHORDS	SIZE		LUMBER	DESCR.
A - C	2x6	DRY	No.2	SPF
C - E	2x4	DRY	No.2	SPF
E - G	2x4	DRY	No.2	SPF
G - I	2x6	DRY	No.2	SPF
P - B	2x4	DRY	No.2	SPF
J - H	2x4	DRY	No.2	SPF
P - M	2x4	DRY	No.2	SPF
M - J	2x4	DRY	No.2	SPF
ALL WEBS EXCEPT	2x3	DRY	No.2	SPF

DRY: SEASONED LUMBER.

PLATES (table is in inches)

JT	TYPE	PLATES	W	LEN	Y	X
B	TMVW+p	MT20	5.0	6.0	2.00	2.25
C	TTWW+m	MT20	5.0	6.0	2.00	1.50
D	TMW+w	MT20	2.0	4.0		
E	TS-t	MT20	3.0	6.0		
F	TMWW-t	MT20	4.0	4.0		
G	TTWW+m	MT20	5.0	6.0	2.00	1.50
H	TMVW+p	MT20	5.0	6.0	2.00	2.25
J	BMV1+p	MT20	3.0	4.0		
K	BMWW-t	MT20	4.0	4.0	1.50	1.50
L	BMWW-t	MT20	4.0	4.0	1.75	1.75
M	BS-t	MT20	3.0	6.0		
N	BMWWW-t	MT20	5.0	6.0	2.50	2.00
O	BMWW-t	MT20	4.0	4.0	1.50	1.50
P	BMV1+p	MT20	3.0	4.0		

NOTE: Lateral brace(s) shown shall be 2x4 SPF #2

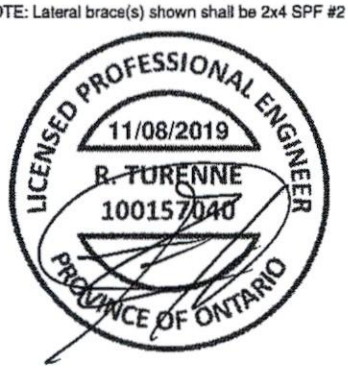

DIMENSIONS, SUPPORTS AND LOADINGS SPECIFIED BY FABRICATOR TO BE VERIFIED BY BUILDING DESIGNER

BEARINGS

JT	FACTORED GROSS REACTION VERT	HORZ	MAXIMUM FACTORED GROSS REACTION DOWN	HORZ	UPLIFT	INPUT BRG IN-SX	REQRD BRG IN-SX
P	1725	0	1725	0	0	5-8	2-9
J	1725	0	1725	0	0	5-8	2-9

UNFACTORED REACTIONS

JT	1ST LCASE COMBINED	MAX./MIN. COMPONENT REACTIONS SNOW	LIVE	PERM.LIVE	WIND	DEAD	SOIL
P	1222	790 / 0	0 / 0	0 / 0	0 / 0	433 / 0	0 / 0
J	1222	790 / 0	0 / 0	0 / 0	0 / 0	433 / 0	0 / 0

BEARING MATERIAL TO BE SPF NO.2 OR BETTER AT JOINT(S) P, J

BRACING

TOP CHORD TO BE SHEATHED OR MAX. PURLIN SPACING = 4.56 FT.
MAX. UNBRACED BOTTOM CHORD LENGTH = 10.00 FT OR RIGID CEILING DIRECTLY APPLIED.

ALL PITCH BREAKS AND PERIMETER CORNER JOINTS MUST BE LATERALLY RESTRAINED.

1 LATERAL BRACE(S) AT 1/ 2 LENGTH OF F-N.

END VERTICAL(S) MUST BE SHEATHED OR HAVE BRACES AS INDICATED IN THE MAX. UNBRACED LENGTH COLUMN OF THE TABLE BELOW

LOADING

TOTAL LOAD CASES: (4)

CHORDS MEMB. FR-TO	MAX. FACTORED FORCE (LBS)	FACTORED VERT. LOAD LC1 (PLF) FROM	TO	MAX CSI (LC)	MAX. UNBRAC LENGTH
A- B	0 / 44	-84.9	-84.9	0.07 (1)	10.00
B- C	-1490 / 0	-84.9	-84.9	0.30 (1)	6.01
C- D	-1597 / 0	-84.9	-84.9	0.55 (1)	4.57
D- E	-1597 / 0	-84.9	-84.9	0.55 (1)	4.56
E- F	-1597 / 0	-84.9	-84.9	0.55 (1)	4.56
F- G	-1598 / 0	-84.9	-84.9	0.55 (1)	4.56
G- H	-1490 / 0	-84.9	-84.9	0.30 (1)	6.01
H- I	0 / 44	-84.9	-84.9	0.07 (1)	10.00
P- B	-1680 / 0	0.0	0.0	0.18 (1)	6.41
J- H	-1680 / 0	0.0	0.0	0.18 (1)	6.41
P- O	0 / 0	-18.5	-18.5	0.17 (4)	10.00
O- N	0 / 1044	-18.5	-18.5	0.27 (1)	10.00
N- M	0 / 1599	-18.5	-18.5	0.33 (1)	10.00
M- L	0 / 1599	-18.5	-18.5	0.33 (1)	10.00
L- K	0 / 1044	-18.5	-18.5	0.27 (4)	10.00
K- J	0 / 0	-18.5	-18.5	0.17 (4)	10.00

WEBS MEMB. FR-TO	MAX. FACTORED FORCE (LBS)	MAX CSI (LC)
O- C	-105 / 58	0.13 (1)
C- N	0 / 867	0.20 (1)
N- D	-557 / 0	0.68 (1)
N- F	-2 / 0	0.00 (1)
L- F	-558 / 0	0.68 (1)
L- G	0 / 869	0.20 (1)
K- G	-106 / 58	0.13 (1)
B- O	0 / 1072	0.24 (1)
K- H	0 / 1072	0.24 (1)

DESIGN CRITERIA

SPECIFIED LOADS:

TOP CH.	LL	=	23.3	PSF
	DL	=	6.0	PSF
BOT CH.	LL	=	0.0	PSF
	DL	=	7.4	PSF
TOTAL LOAD		=	36.7	PSF

SPACING = 24.0 IN. C/C

LOADING IN FLAT SECTION BASED ON A SLOPE OF 2.00/12 MINIMUM

THIS TRUSS IS DESIGNED FOR RESIDENTIAL OR SMALL BUILDING REQUIREMENTS OF PART 9, NBCC 2010, NBCC 2015

THIS DESIGN COMPLIES WITH:
- PART 9 OF BCBC 2018 , OBC 2012 , ABC 2019
- CSA 086-09, CSA 086-14
- TPIC 2011, TPIC 2014

(55 % OF 27.2 P.S.F. G.S.L. PLUS 8.4 P.S.F. RAIN LOAD) EQUALS 23.3 P.S.F. SPECIFIED ROOF LIVE LOAD

ALLOWABLE DEFL.(LL)= L/360 (1.03")
CALCULATED VERT. DEFL.(LL) = L/ 999 (0.06")
ALLOWABLE DEFL.(TL)= L/360 (1.03")
CALCULATED VERT. DEFL.(TL) = L/ 999 (0.13")

CSI: TC=0.55/1.00 (F-G:1) , BC=0.33/1.00 (L-N:1) , WB=0.68/1.00 (F-L:1) , SSI=0.25/1.00 (F-G:1)

DOL LUMBER=1.00 NAIL=1.00 LS BEND=1.10 COMP=1.10 SHEAR=1.10 TENS= 1.10

COMPANION LIVE LOAD FACTOR = 1.00

TRUSS PLATE MANUFACTURER IS NOT RESPONSIBLE FOR QUALITY CONTROL IN THE TRUSS MANUFACTURING PLANT .

NAIL VALUES

PLATE	GRIP(DRY) (PSI) MAX	MIN	SHEAR (PLI) MAX	MIN	SECTION (PLI) MAX	MIN
MT20	618	354	1667	788	1987	1656

PLATE PLACEMENT TOL. = 0.250 inches

PLATE ROTATION TOL. = 5.0 Deg.

JSI GRIP= 0.71 (B) (INPUT = 0.90)
JSI METAL= 0.55 (M) (INPUT = 1.00)

JOB NAME	TRUSS NAME	QUANTITY	PLY	JOB DESC.	DRWG NO.
313989	H04		1	TRUSS DESC. JT-39002	E-19112490

Alpa Roof Truss, Maple

Version 8.300 S Aug 9 2019 MiTek Industries, Inc. Fri Nov 8 11:48:39 2019 Page 1

ID:VRLqmclDiflZCj2mk6F92VyQuye-7OsHUK94NnFtOz5aulvz1qXXWyr25aBBv49h_myLGUM

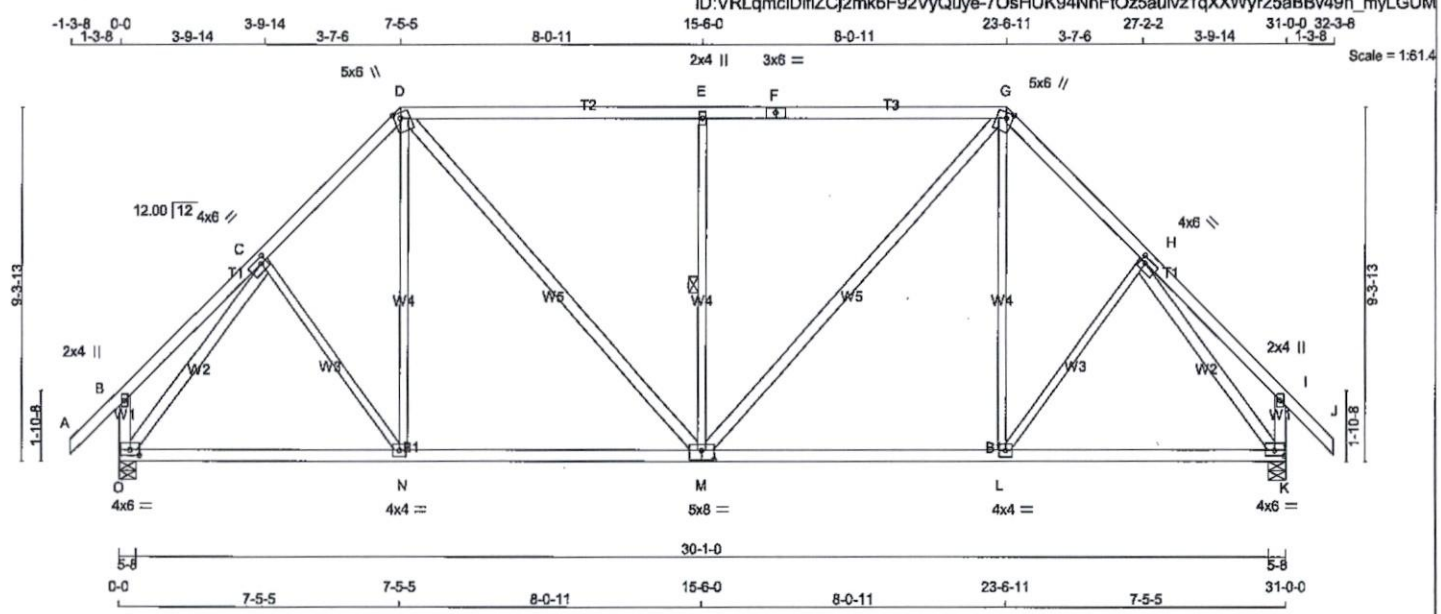

TOTAL WEIGHT = 2 X 158 = 315 lb

[M]

LUMBER

N. L. G. A. RULES

CHORDS	SIZE		LUMBER	DESCR.
A - D	2x4	DRY	No.2	SPF
D - F	2x4	DRY	2100F 1.8E	SPF
F - G	2x4	DRY	2100F 1.8E	SPF
G - J	2x4	DRY	No.2	SPF
O - B	2x4	DRY	No.2	SPF
K - I	2x4	DRY	No.2	SPF
O - M	2x4	DRY	No.2	SPF
M - K	2x4	DRY	No.2	SPF
ALL WEBS EXCEPT	2x4	DRY	No.2	SPF
C - N	2x3	DRY	No.2	SPF
N - D	2x3	DRY	No.2	SPF
M - E	2x3	DRY	No.2	SPF
L - G	2x3	DRY	No.2	SPF
L - H	2x3	DRY	No.2	SPF

DRY: SEASONED LUMBER.

PLATES (table is in inches)

JT	TYPE	PLATES	W	LEN	Y	X
B	TMV+p	MT20	2.0	4.0		
C	TMWW-t	MT20	4.0	6.0	1.75	1.75
D	TTWW+m	MT20	5.0	6.0	1.75	2.00
E	TMW+w	MT20	2.0	4.0		
F	TS-t	MT20	3.0	6.0		
G	TTWW+m	MT20	5.0	6.0	1.75	2.00
H	TMWW-t	MT20	4.0	6.0	1.75	1.75
I	TMV+p	MT20	2.0	4.0		
K	BMVW1-t	MT20	4.0	6.0	1.75	3.00
L	BMWW-t	MT20	4.0	4.0		
M	BSWWW-l	MT20	5.0	8.0	3.00	4.00
N	BMWW-t	MT20	4.0	4.0		
O	BMVW1-t	MT20	4.0	6.0	1.75	3.00

NOTE: Lateral brace(s) shown shall be 2x4 SPF #2

LICENSED PROFESSIONAL ENGINEER
11/08/2019
R. TURENNE
100157040
PROVINCE OF ONTARIO

DIMENSIONS, SUPPORTS AND LOADINGS SPECIFIED BY FABRICATOR TO BE VERIFIED BY BUILDING DESIGNER

BEARINGS

JT	FACTORED GROSS REACTION VERT	HORZ	MAXIMUM FACTORED GROSS REACTION DOWN	HORZ	UPLIFT	INPUT BRG IN-SX	REQRD BRG IN-SX
O	1720	0	1720	0	0	5-8	1-14
K	1720	0	1720	0	0	5-8	1-14

UNFACTORED REACTIONS

JT	1ST LCASE COMBINED	MAX./MIN. COMPONENT REACTIONS SNOW	LIVE	PERM.LIVE	WIND	DEAD	SOIL
O	1219	787 / 0	0 / 0	0 / 0	0 / 0	432 / 0	0 / 0
K	1219	787 / 0	0 / 0	0 / 0	0 / 0	432 / 0	0 / 0

BEARING MATERIAL TO BE SPF NO.2 OR BETTER AT JOINT(S) O, K

BRACING

TOP CHORD TO BE SHEATHED OR MAX. PURLIN SPACING = 5.16 FT.
MAX. UNBRACED BOTTOM CHORD LENGTH = 10.00 FT OR RIGID CEILING DIRECTLY APPLIED.

ALL PITCH BREAKS AND PERIMETER CORNER JOINTS MUST BE LATERALLY RESTRAINED.

1 LATERAL BRACE(S) AT 1/ 2 LENGTH OF E-M.

END VERTICAL(S) MUST BE SHEATHED OR HAVE BRACES AS INDICATED IN THE MAX. UNBRACED LENGTH COLUMN OF THE TABLE BELOW

LOADING

TOTAL LOAD CASES: (4)

CHORDS

MEMB. FR-TO	MAX. FACTORED FORCE (LBS)	FACTORED VERT. LOAD LC1 (PLF) FROM	TO	MAX CSI (LC)	MAX. UNBRAC LENGTH
A- B	0 / 42	-84.9	-84.9	0.12 (1)	10.00
B- C	0 / 26	-84.9	-84.9	0.18 (1)	10.00
C- D	-1475 / 0	-84.9	-84.9	0.23 (1)	5.16
D- E	-1450 / 0	-84.9	-84.9	0.70 (1)	5.31
E- F	-1451 / 0	-84.9	-84.9	0.70 (1)	5.31
F- G	-1451 / 0	-84.9	-84.9	0.70 (1)	5.31
G- H	-1475 / 0	-84.9	-84.9	0.23 (1)	5.16
H- I	0 / 26	-84.9	-84.9	0.18 (1)	10.00
I- J	0 / 42	-84.9	-84.9	0.12 (1)	10.00
O- B	-238 / 0	0.0	0.0	0.03 (1)	7.81
K- I	-238 / 0	0.0	0.0	0.03 (1)	7.81
O- N	0 / 1011	-18.5	-18.5	0.41 (4)	10.00
N- M	0 / 1023	-18.5	-18.5	0.42 (4)	10.00
M- L	0 / 1023	-18.5	-18.5	0.42 (4)	10.00
L- K	0 / 1011	-18.5	-18.5	0.41 (4)	10.00

WEBS

MEMB. FR-TO	MAX. FACTORED FORCE (LBS)	MAX CSI (LC)
C- N	0 / 49	0.02 (4)
D- M	0 / 164	0.06 (4)
D- M	0 / 640	0.10 (1)
M- E	-840 / 0	0.48 (1)
M- G	0 / 640	0.10 (1)
L- G	0 / 164	0.06 (4)
L- H	0 / 49	0.02 (4)
O- C	-1752 / 0	0.90 (1)
H- K	-1752 / 0	0.90 (1)

DESIGN CRITERIA

SPECIFIED LOADS:

TOP CH.	LL =	23.3	PSF
	DL =	6.0	PSF
BOT CH.	LL =	0.0	PSF
	DL =	7.4	PSF
TOTAL LOAD	=	36.7	PSF

SPACING = 24.0 IN. C/C

LOADING IN FLAT SECTION BASED ON A SLOPE OF 2.00/12 MINIMUM

THIS TRUSS IS DESIGNED FOR RESIDENTIAL OR SMALL BUILDING REQUIREMENTS OF PART 9, NBCC 2010, NBCC 2015

THIS DESIGN COMPLIES WITH:
- PART 9 OF BCBC 2018 , OBC 2012 , ABC 2019
- CSA 086-09, CSA 086-14
- TPIC 2011, TPIC 2014

(55 % OF 27.2 P.S.F. G.S.L. PLUS 8.4 P.S.F. RAIN LOAD) EQUALS 23.3 P.S.F. SPECIFIED ROOF LIVE LOAD

ALLOWABLE DEFL.(LL)= L/360 (1.03")
CALCULATED VERT. DEFL.(LL) = L/ 999 (0.06")
ALLOWABLE DEFL.(TL)= L/360 (1.03")
CALCULATED VERT. DEFL.(TL) = L/ 999 (0.16")

CSI: TC=0.70/1.00 (E-G:1) , BC=0.42/1.00 (L-M:4) , WB=0.90/1.00 (H-K:1) , SSI=0.33/1.00 (D-E:1)

DOL LUMBER=1.00 NAIL=1.00 LS BEND=1.10 COMP=1.10 SHEAR=1.10 TENS= 1.10

COMPANION LIVE LOAD FACTOR = 1.00

AUTOSOLVE HEELS OFF

TRUSS PLATE MANUFACTURER IS NOT RESPONSIBLE FOR QUALITY CONTROL IN THE TRUSS MANUFACTURING PLANT .

NAIL VALUES

PLATE	GRIP(DRY) (PSI) MAX	MIN	SHEAR (PLI) MAX	MIN	SECTION (PLI) MAX	MIN
MT20	618	354	1667	788	1987	1656

PLATE PLACEMENT TOL. = 0.250 inches

PLATE ROTATION TOL. = 5.0 Deg.

JSI GRIP= 0.71 (O) (INPUT = 0.90)
JSI METAL= 0.43 (H) (INPUT = 1.00)

JOB NAME	TRUSS NAME	QUANTITY	PLY	JOB DESC.	DRWG NO.
313989	H05		1	TRUSS DESC. JT-39002	E-19112491

Alpa Roof Truss, Maple

Version 8.300 S Aug 9 2019 MiTek Industries, Inc. Fri Nov 8 11:48:40 2019 Page 1

ID:VRLqmcIDiflZCj2mk6F92VyQuye-bbQfhfAi85Nk07gmRSQCa23jKMAoq7HL8kuFWCyLGUL

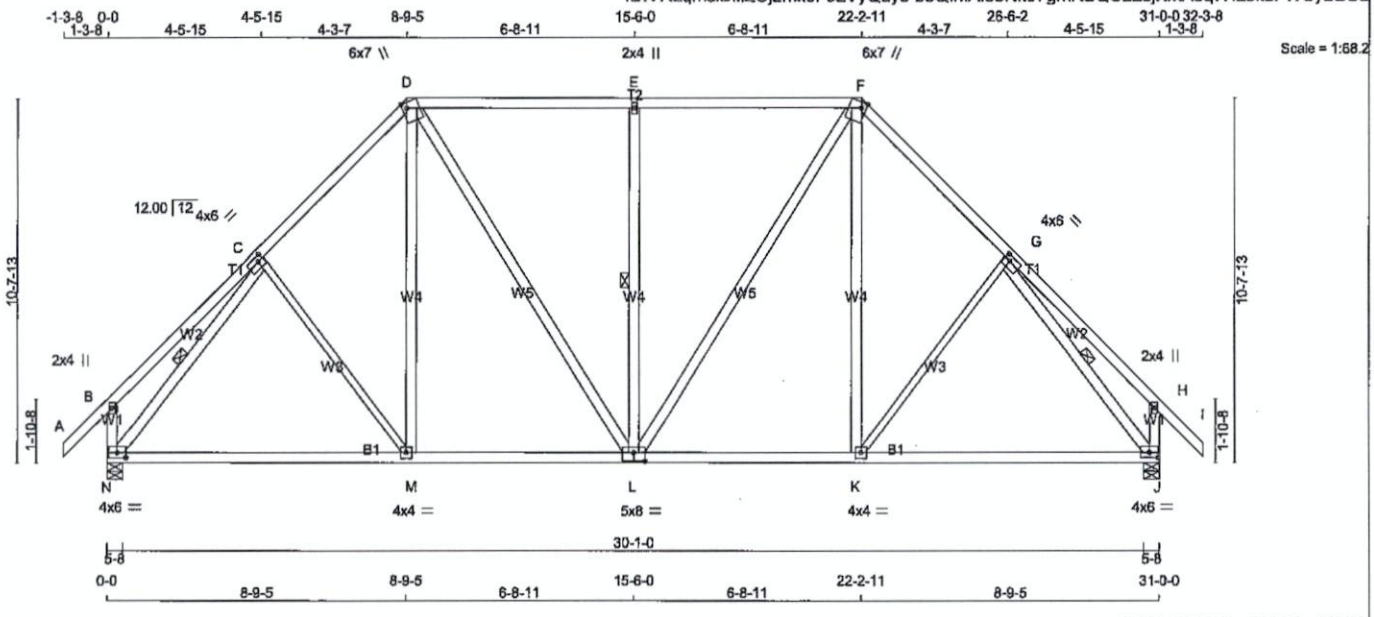

TOTAL WEIGHT = 9 X 176 = 1585 lb

[M][F]

LUMBER

N. L. G. A. RULES

CHORDS	SIZE		LUMBER	DESCR.
A - D	2x4	DRY	No.2	SPF
D - F	2x4	DRY	No.2	SPF
F - I	2x4	DRY	No.2	SPF
N - B	2x4	DRY	No.2	SPF
J - H	2x4	DRY	No.2	SPF
N - L	2x4	DRY	No.2	SPF
L - J	2x4	DRY	No.2	SPF
ALL WEBS	2x4	DRY	No.2	SPF
EXCEPT				
C - M	2x3	DRY	No.2	SPF
K - G	2x3	DRY	No.2	SPF

DRY: SEASONED LUMBER.

PLATES (table is in inches)

JT	TYPE	PLATES	W	LEN	Y	X
B	TMV+p	MT20	2.0	4.0		
C	TMWW-t	MT20	4.0	6.0	1.75	2.00
D	TTWW+m	MT20	6.0	7.0	Edge	1.75
E	TMW+w	MT20	2.0	4.0		
F	TTWW+m	MT20	6.0	7.0	Edge	1.75
G	TMWW-t	MT20	4.0	6.0	1.75	2.00
H	TMV+p	MT20	2.0	4.0		
J	BMVW1-t	MT20	4.0	6.0	1.75	3.00
K	BMWW-t	MT20	4.0	4.0		
L	BSWWW-t	MT20	5.0	8.0	3.00	4.00
M	BMWW-t	MT20	4.0	4.0		
N	BMVW1-t	MT20	4.0	6.0	1.75	3.00

Edge - INDICATES REFERENCE CORNER OF PLATE TOUCHES EDGE OF CHORD.

NOTE: Lateral brace(s) shown shall be 2x4 SPF #2

LICENSED PROFESSIONAL ENGINEER
11/08/2019
R. TURENNE
100157040
PROVINCE OF ONTARIO

DIMENSIONS, SUPPORTS AND LOADINGS SPECIFIED BY FABRICATOR TO BE VERIFIED BY BUILDING DESIGNER

BEARINGS

JT	FACTORED GROSS REACTION VERT	HORZ	MAXIMUM FACTORED GROSS REACTION DOWN	HORZ	UPLIFT	INPUT BRG IN-SX	REQRD BRG IN-SX
N	1771	0	1771	0	0	5-8	1-15
J	1771	0	1771	0	0	5-8	1-15

UNFACTORED REACTIONS

JT	1ST LCASE COMBINED	MAX./MIN. COMPONENT REACTIONS SNOW	LIVE	PERM.LIVE	WIND	DEAD	SOIL
N	1259	787 / 0	0 / 0	0 / 0	0 / 0	472 / 0	0 / 0
J	1259	787 / 0	0 / 0	0 / 0	0 / 0	472 / 0	0 / 0

BEARING MATERIAL TO BE SPF NO.2 OR BETTER AT JOINT(S) N, J

BRACING

FOR SECTION D-F, MAX. PURLIN SPACING = 2.00 FT.
FOR OTHER SECTIONS, TOP CHORD TO BE SHEATHED OR MAX. PURLIN SPACING = 5.14 FT.
MAX. UNBRACED BOTTOM CHORD LENGTH = 10.00 FT OR RIGID CEILING DIRECTLY APPLIED.

ALL PITCH BREAKS AND PERIMETER CORNER JOINTS MUST BE LATERALLY RESTRAINED.

1 LATERAL BRACE(S) AT 1/ 2 LENGTH OF E-L, C-N, G-J.

END VERTICAL(S) MUST BE SHEATHED OR HAVE BRACES AS INDICATED IN THE MAX. UNBRACED LENGTH COLUMN OF THE TABLE BELOW

LOADING

TOTAL LOAD CASES: (4)

CHORDS

MEMB. FR-TO	MAX. FACTORED FORCE (LBS)	FACTORED VERT. LOAD LC1 (PLF) FROM	TO	MAX CSI (LC)	MAX. UNBRAC LENGTH
A- B	0 / 42	-84.9	-84.9	0.12 (1)	10.00
B- C	0 / 31	-84.9	-84.9	0.27 (1)	10.00
C- D	-1493 / 0	-84.9	-84.9	0.24 (1)	5.14
D- E	-1307 / 0	-92.4	-92.4	0.57 (1)	2.00
E- F	-1307 / 0	-92.4	-92.4	0.57 (1)	2.00
F- G	-1493 / 0	-84.9	-84.9	0.24 (1)	5.14
G- H	0 / 31	-84.9	-84.9	0.27 (1)	10.00
H- I	0 / 42	-84.9	-84.9	0.12 (1)	10.00
N- B	-258 / 0	0.0	0.0	0.03 (1)	7.81
J- H	-258 / 0	0.0	0.0	0.03 (1)	7.81
N- M	0 / 1070	-18.5	-18.5	0.44 (4)	10.00
M- L	0 / 1034	-18.5	-18.5	0.45 (4)	10.00
L- K	0 / 1034	-18.5	-18.5	0.45 (4)	10.00
K- J	0 / 1070	-18.5	-18.5	0.44 (4)	10.00

WEBS

MEMB. FR-TO	MAX. FACTORED FORCE (LBS)	MAX CSI (LC)
C- M	-65 / 33	0.07 (1)
M- D	0 / 232	0.04 (4)
D- L	0 / 501	0.08 (1)
L- E	-762 / 0	0.43 (1)
L- F	0 / 501	0.08 (1)
K- F	0 / 232	0.04 (4)
K- G	-65 / 33	0.07 (1)
N- C	-1799 / 0	0.46 (1)
G- J	-1799 / 0	0.46 (1)

DESIGN CRITERIA

SPECIFIED LOADS:

TOP CH.	LL	=	23.3	PSF
	DL	=	6.0	PSF
BOT CH.	LL	=	0.0	PSF
	DL	=	7.4	PSF
TOTAL LOAD		=	36.7	PSF

SPACING = 24.0 IN. C/C

LOADING IN FLAT SECTION BASED ON PIGGYBACK TRUSS WITH SLOPES OF 6.00/12 AND -6.00/12 AND RESPECTIVE WALL HEIGHTS OF 0-0 AND 0-0 AND AN ADDITIONAL DEAD LOAD OF 3.0 P.S.F.

THIS TRUSS IS DESIGNED FOR RESIDENTIAL OR SMALL BUILDING REQUIREMENTS OF PART 9, NBCC 2010, NBCC 2015

THIS DESIGN COMPLIES WITH:
- PART 9 OF BCBC 2018 , OBC 2012 , ABC 2019
- CSA 086-09, CSA 086-14
- TPIC 2011, TPIC 2014

(55 % OF 27.2 P.S.F. G.S.L. PLUS 8.4 P.S.F. RAIN LOAD) EQUALS 23.3 P.S.F. SPECIFIED ROOF LIVE LOAD

ALLOWABLE DEFL.(LL)= L/360 (1.03")
CALCULATED VERT. DEFL.(LL) = L/ 999 (0.04")
ALLOWABLE DEFL.(TL)= L/360 (1.03")
CALCULATED VERT. DEFL.(TL) = L/ 999 (0.19")

CSI: TC=0.57/1.00 (D-E:1) , BC=0.45/1.00 (K-L:4) , WB=0.46/1.00 (C-N:1) , SSI=0.30/1.00 (E-F:1)

DOL LUMBER=1.00 NAIL=1.00 LS BEND=1.10 COMP=1.10 SHEAR=1.10 TENS= 1.10

COMPANION LIVE LOAD FACTOR = 1.00

AUTOSOLVE HEELS OFF

TRUSS PLATE MANUFACTURER IS NOT RESPONSIBLE FOR QUALITY CONTROL IN THE TRUSS MANUFACTURING PLANT .

NAIL VALUES

PLATE	GRIP(DRY) (PSI) MAX	MIN	SHEAR (PLI) MAX	MIN	SECTION (PLI) MAX	MIN
MT20	618	354	1667	788	1987	1656

PLATE PLACEMENT TOL. = 0.250 inches

PLATE ROTATION TOL. = 5.0 Deg.

JSI GRIP= 0.73 (J) (INPUT = 0.90)
JSI METAL= 0.45 (C) (INPUT = 1.00)

JOB NAME	TRUSS NAME	QUANTITY	PLY	JOB DESC.	DRWG NO.
313989	H06P		1	TRUSS DESC. JT-39002	E-19112492

Alpa Roof Truss, Maple

Version 8.300 S Aug 9 2019 MiTek Industries, Inc. Fri Nov 8 11:48:42 2019 Page 1

ID:VRLqmcIDiflZCj2mk6F92VyQuye-YzXQ6LBygidSFQq9ZtSgfT9879vvI5Yeb2NMb5yLGUJ

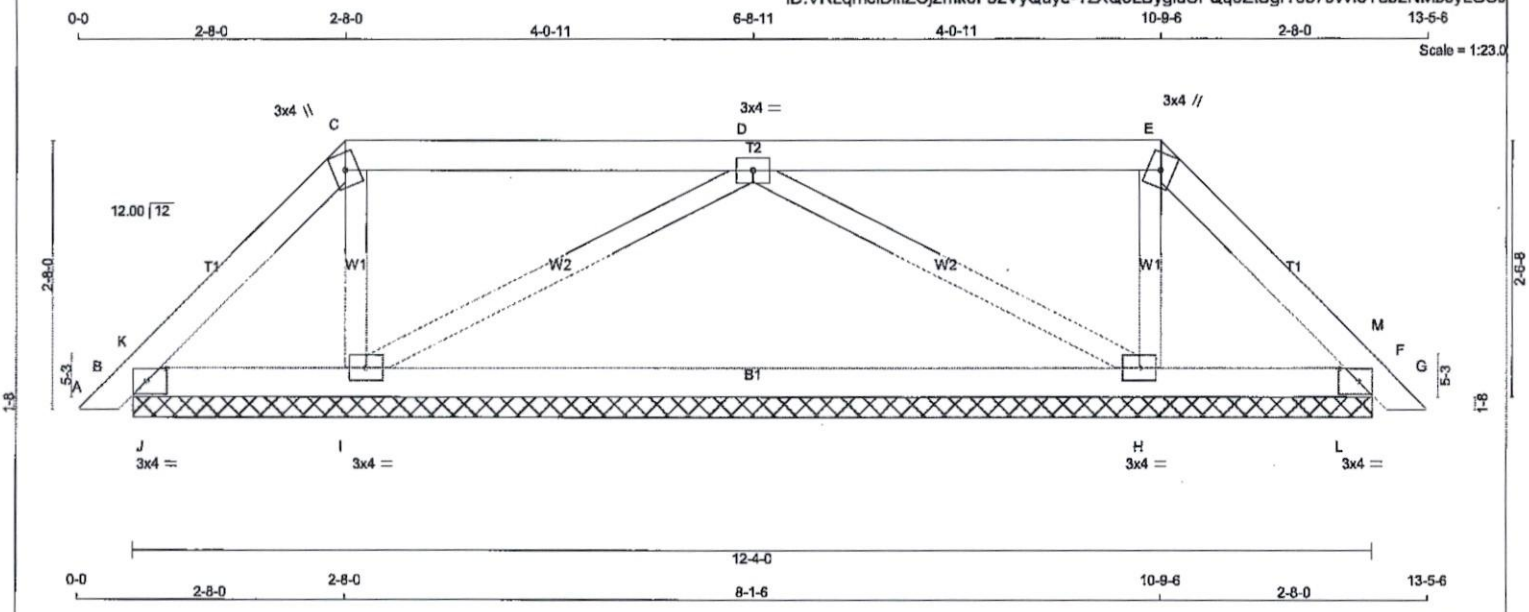

TOTAL WEIGHT = 2 X 42 = 84 lb

[M]

LUMBER

N. L. G. A. RULES

CHORDS	SIZE		LUMBER	DESCR.
A - C	2x4	DRY	No.2	SPF
C - E	2x4	DRY	No.2	SPF
E - G	2x4	DRY	No.2	SPF
B - F	2x4	DRY	No.2	SPF
ALL WEBS	2x3	DRY	No.2	SPF

DRY: SEASONED LUMBER.

PLATES (table is in inches)

JT	TYPE	PLATES	W	LEN	Y	X
B	TMB1-I	MT20	3.0	4.0	1.50	2.25
C	TTW+m	MT20	3.0	4.0		
D	TMWW-t	MT20	3.0	4.0		
E	TTW+m	MT20	3.0	4.0		
F	TMB1-I	MT20	3.0	4.0	1.50	2.25
H	BMWW1-t	MT20	3.0	4.0		
I	BMWW1-t	MT20	3.0	4.0		

NOTE: Lateral brace(s) shown shall be 2x4 SPF #2

LICENSED PROFESSIONAL ENGINEER
11/08/2019
R. TURENNE
100157040
PROVINCE OF ONTARIO

DIMENSIONS, SUPPORTS AND LOADINGS SPECIFIED BY FABRICATOR TO BE VERIFIED BY BUILDING DESIGNER

BEARINGS

JT	FACTORED GROSS REACTION VERT	HORZ	MAXIMUM FACTORED GROSS REACTION DOWN	HORZ	UPLIFT	INPUT BRG IN-SX	REQRD BRG IN-SX
B	76	0	76	0	-8	12-4-0	1-3-14
F	76	0	76	0	-8	12-4-0	1-3-14
I	599	0	599	0	0	12-4-0	1-3-14
H	599	0	599	0	0	12-4-0	1-3-14

PROVIDE ANCHORAGE AT BEARING JOINT B FOR 150 LBS FACTORED UPLIFT
PROVIDE ANCHORAGE AT BEARING JOINT F FOR 150 LBS FACTORED UPLIFT

UNFACTORED REACTIONS

JT	1ST LCASE COMBINED	MAX./MIN. COMPONENT REACTIONS SNOW	LIVE	PERM.LIVE	WIND	DEAD	SOIL
B	50	55 / 0	0 / 0	0 / 0	0 / 0	0 / -6	0 / 0
F	50	55 / 0	0 / 0	0 / 0	0 / 0	0 / -6	0 / 0
I	429	253 / 0	0 / 0	0 / 0	0 / 0	176 / 0	0 / 0
H	429	253 / 0	0 / 0	0 / 0	0 / 0	176 / 0	0 / 0

BEARING MATERIAL TO BE SPF NO.2 OR BETTER AT JOINT(S) B, F, I, H

BRACING

TOP CHORD TO BE SHEATHED OR MAX. PURLIN SPACING = 10.00 FT.
MAX. UNBRACED BOTTOM CHORD LENGTH = 6.25 FT OR RIGID CEILING DIRECTLY APPLIED.

ALL PITCH BREAKS AND PERIMETER CORNER JOINTS MUST BE LATERALLY RESTRAINED.

LOADING

TOTAL LOAD CASES: (4)

CHORDS

MEMB. FR-TO	MAX. FACTORED FORCE (LBS)	FACTORED VERT. LOAD LC1 (PLF) FROM	TO	MAX CSI (LC)	MAX. UNBRAC LENGTH
A- B	0 / 12	-84.9	-84.9	0.01 (1)	10.00
B- K	0 / 158	-84.9	-84.9	0.06 (1)	10.00
K- C	0 / 36	-84.9	-84.9	0.04 (1)	10.00
C- D	0 / 43	-84.9	-84.9	0.23 (1)	10.00
D- E	0 / 43	-84.9	-84.9	0.23 (1)	10.00
E- M	0 / 36	-84.9	-84.9	0.04 (1)	10.00
M- F	0 / 158	-84.9	-84.9	0.06 (1)	10.00
F- G	0 / 12	-84.9	-84.9	0.01 (1)	10.00
B- J	-32 / 0	-18.5	-18.5	0.06 (1)	6.25
J- I	-32 / 0	-18.5	-18.5	0.20 (4)	6.25
I- H	0 / 332	-18.5	-18.5	0.21 (4)	10.00
H- L	-32 / 0	-18.5	-18.5	0.20 (4)	6.25
L- F	-32 / 0	-18.5	-18.5	0.06 (1)	6.25

WEBS

MEMB. FR-TO	MAX. FACTORED FORCE (LBS)	MAX CSI (LC)
I- C	-231 / 0	0.04 (1)
I- D	-431 / 0	0.15 (1)
D- H	-431 / 0	0.15 (1)
H- E	-231 / 0	0.04 (1)
J- K	-242 / 0	0.00 (1)
L- M	-242 / 0	0.00 (1)

DESIGN CRITERIA

SPECIFIED LOADS:

TOP CH.	LL =	23.3	PSF
	DL =	6.0	PSF
BOT CH.	LL =	0.0	PSF
	DL =	7.4	PSF
TOTAL LOAD	=	36.7	PSF

SPACING = 24.0 IN. C/C

LOADING IN FLAT SECTION BASED ON A SLOPE OF 2.00/12 MINIMUM

THIS TRUSS IS DESIGNED FOR RESIDENTIAL OR SMALL BUILDING REQUIREMENTS OF PART 9, NBCC 2010, NBCC 2015

THIS DESIGN COMPLIES WITH:
- PART 9 OF BCBC 2018 , OBC 2012 , ABC 2019
- CSA 086-09, CSA 086-14
- TPIC 2011, TPIC 2014

(55 % OF 27.2 P.S.F. G.S.L. PLUS 8.4 P.S.F. RAIN LOAD) EQUALS 23.3 P.S.F. SPECIFIED ROOF LIVE LOAD

CSI: TC=0.23/1.00 (D-E:1) , BC=0.21/1.00 (H-I:4) , WB=0.15/1.00 (D-H:1) , SSI=0.17/1.00 (C-D:1)

DOL LUMBER=1.00 NAIL=1.00 LS BEND=1.10 COMP=1.10 SHEAR=1.10 TENS= 1.10

COMPANION LIVE LOAD FACTOR = 1.00

TRUSS PLATE MANUFACTURER IS NOT RESPONSIBLE FOR QUALITY CONTROL IN THE TRUSS MANUFACTURING PLANT .

NAIL VALUES

PLATE	GRIP(DRY) (PSI) MAX	MIN	SHEAR (PLI) MAX	MIN	SECTION (PLI) MAX	MIN
MT20	618	354	1667	788	1987	1656

PLATE PLACEMENT TOL. = 0.250 inches

PLATE ROTATION TOL. = 5.0 Deg.

JSI GRIP= 0.58 (H) (INPUT = 0.90)
JSI METAL= 0.14 (H) (INPUT = 1.00)

JOB NAME	TRUSS NAME	QUANTITY	PLY	JOB DESC.	DRWG NO.
313989	H07P		1	TRUSS DESC. JT-39002	E-19112493

Alpa Roof Truss, Maple

Version 8.300 S Aug 9 2019 MiTek Industries, Inc. Fri Nov 8 11:48:43 2019 Page 1

ID:VRLqmcIDifIZCj2mk6F92VyQuye-0A5oJhCaR0lJtaPL7bzvCghGmZHe1aGnqI7v7XyLGUI

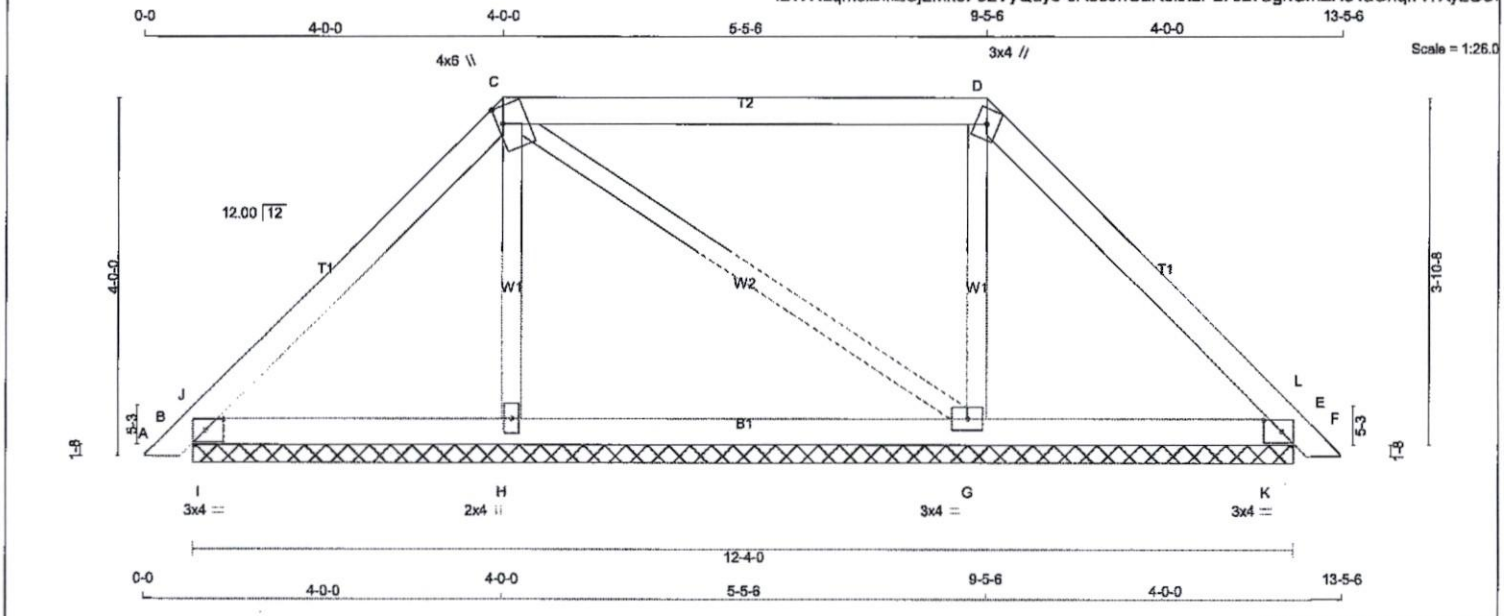

TOTAL WEIGHT = 3 X 43 = 130 lb

[M]

LUMBER

N. L. G. A. RULES

CHORDS	SIZE		LUMBER	DESCR.
A - C	2x4	DRY	No.2	SPF
C - D	2x4	DRY	No.2	SPF
D - F	2x4	DRY	No.2	SPF
B - E	2x4	DRY	No.2	SPF
ALL WEBS	2x3	DRY	No.2	SPF

DRY: SEASONED LUMBER.

PLATES (table is in inches)

JT	TYPE	PLATES	W	LEN	Y	X
B	TMB1-I	MT20	3.0	4.0	1.50	2.25
C	TTWW+m	MT20	4.0	6.0	2.25	0.75
D	TTW+m	MT20	3.0	4.0		
E	TMB1-I	MT20	3.0	4.0	1.50	2.50
G	BMWW1-t	MT20	3.0	4.0		
H	BMW1+w	MT20	2.0	4.0		

NOTE: Lateral brace(s) shown shall be 2x4 SPF #2

LICENSED PROFESSIONAL ENGINEER
11/08/2019
R. TURENNE
100157040
PROVINCE OF ONTARIO

DIMENSIONS, SUPPORTS AND LOADINGS SPECIFIED BY FABRICATOR TO BE VERIFIED BY BUILDING DESIGNER

BEARINGS

JT	FACTORED GROSS REACTION VERT	HORZ	MAXIMUM FACTORED GROSS REACTION DOWN	HORZ	UPLIFT	INPUT BRG IN-SX	REQRD BRG IN-SX
B	333	0	333	0	0	12-4-0	1-6-1
E	307	0	307	0	0	12-4-0	1-6-1
H	324	0	324	0	0	12-4-0	1-6-1
G	385	0	385	0	0	12-4-0	1-6-1

UNFACTORED REACTIONS

JT	1ST LCASE COMBINED	MAX./MIN. COMPONENT REACTIONS SNOW	LIVE	PERM.LIVE	WIND	DEAD	SOIL
B	233	169 / 0	0 / 0	0 / 0	0 / 0	64 / 0	0 / 0
E	215	155 / 0	0 / 0	0 / 0	0 / 0	60 / 0	0 / 0
H	233	129 / 0	0 / 0	0 / 0	0 / 0	104 / 0	0 / 0
G	276	163 / 0	0 / 0	0 / 0	0 / 0	113 / 0	0 / 0

BEARING MATERIAL TO BE SPF NO.2 OR BETTER AT JOINT(S) B, E, H, G

BRACING

TOP CHORD TO BE SHEATHED OR MAX. PURLIN SPACING = 6.25 FT.
MAX. UNBRACED BOTTOM CHORD LENGTH = 10.00 FT OR RIGID CEILING DIRECTLY APPLIED.

ALL PITCH BREAKS AND PERIMETER CORNER JOINTS MUST BE LATERALLY RESTRAINED.

LOADING

TOTAL LOAD CASES: (4)

CHORDS

MEMB. FR-TO	MAX. FACTORED FORCE (LBS)	FACTORED VERT. LOAD LC1 (PLF) FROM	TO	MAX CSI (LC)	MAX. UNBRAC LENGTH
A- B	0 / 12	-84.9	-84.9	0.01 (1)	10.00
B- J	-24 / 0	-84.9	-84.9	0.07 (1)	6.25
J- C	-190 / 0	-84.9	-84.9	0.12 (1)	6.25
C- D	-93 / 0	-84.9	-84.9	0.43 (1)	6.25
D- L	-154 / 0	-84.9	-84.9	0.12 (1)	6.25
L- E	-17 / 23	-84.9	-84.9	0.07 (1)	6.25
E- F	0 / 12	-84.9	-84.9	0.01 (1)	10.00
B- I	0 / 126	-18.5	-18.5	0.12 (1)	10.00
I- H	0 / 126	-18.5	-18.5	0.12 (1)	10.00
H- G	0 / 120	-18.5	-18.5	0.10 (4)	10.00
G- K	0 / 101	-18.5	-18.5	0.12 (1)	10.00
K- E	0 / 101	-18.5	-18.5	0.12 (1)	10.00

WEBS

MEMB. FR-TO	MAX. FACTORED FORCE (LBS)	MAX CSI (LC)
H- C	-209 / 0	0.05 (1)
C- G	-32 / 0	0.02 (1)
G- D	-252 / 0	0.06 (1)
I- J	-356 / 0	0.00 (1)
K- L	-363 / 0	0.00 (1)

DESIGN CRITERIA

SPECIFIED LOADS:

TOP CH.	LL	=	23.3	PSF
	DL	=	6.0	PSF
BOT CH.	LL	=	0.0	PSF
	DL	=	7.4	PSF
TOTAL LOAD		=	36.7	PSF

SPACING = 24.0 IN. C/C

LOADING IN FLAT SECTION BASED ON A SLOPE OF 2.00/12 MINIMUM

THIS TRUSS IS DESIGNED FOR RESIDENTIAL OR SMALL BUILDING REQUIREMENTS OF PART 9, NBCC 2010, NBCC 2015

THIS DESIGN COMPLIES WITH:
- PART 9 OF BCBC 2018 , OBC 2012 , ABC 2019
- CSA 086-09, CSA 086-14
- TPIC 2011, TPIC 2014

(55 % OF 27.2 P.S.F. G.S.L. PLUS 8.4 P.S.F. RAIN LOAD) EQUALS 23.3 P.S.F. SPECIFIED ROOF LIVE LOAD

CSI: TC=0.43/1.00 (C-D:1) , BC=0.12/1.00 (H-I:1) , WB=0.06/1.00 (D-G:1) , SSI=0.28/1.00 (E-K:1)

DOL LUMBER=1.00 NAIL=1.00 LS BEND=1.10 COMP=1.10 SHEAR=1.10 TENS= 1.10

COMPANION LIVE LOAD FACTOR = 1.00

TRUSS PLATE MANUFACTURER IS NOT RESPONSIBLE FOR QUALITY CONTROL IN THE TRUSS MANUFACTURING PLANT .

NAIL VALUES

PLATE	GRIP(DRY) (PSI) MAX	MIN	SHEAR (PLI) MAX	MIN	SECTION (PLI) MAX	MIN
MT20	618	354	1667	788	1987	1656

PLATE PLACEMENT TOL. = 0.250 inches

PLATE ROTATION TOL. = 5.0 Deg.

JSI GRIP= 0.53 (D) (INPUT = 0.90)
JSI METAL= 0.08 (B) (INPUT = 1.00)

JOB NAME	TRUSS NAME	QUANTITY	PLY	JOB DESC.	DRWG NO.
313989	H10		1	TRUSS DESC. JT-39002	E-19112494

Alpa Roof Truss, Maple

Version 8.300 S Aug 9 2019 MiTek Industries, Inc. Fri Nov 8 11:48:45 2019 Page 1
ID:VRLqmcIDiflZCj2mk6F92VyQuye-yYDYkNErzd?06uYkE?0NH5nfjNxhVUg4H0c0CQyLGUG

Scale = 1:54.6

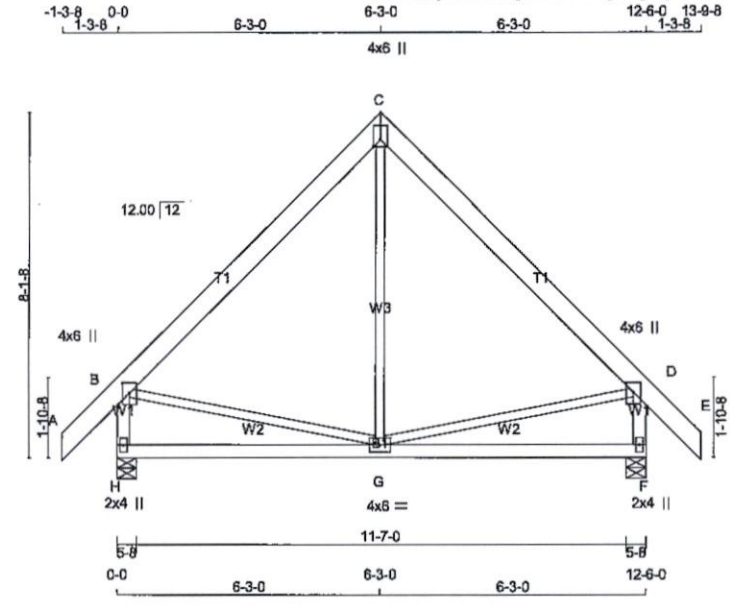

TOTAL WEIGHT = 73 lb

[M][F]

LUMBER
N. L. G. A. RULES

CHORDS	SIZE		LUMBER	DESCR.
A - C	2x6	DRY	No.2	SPF
C - E	2x6	DRY	No.2	SPF
H - B	2x4	DRY	No.2	SPF
F - D	2x4	DRY	No.2	SPF
H - F	2x4	DRY	No.2	SPF
ALL WEBS EXCEPT	2x3	DRY	No.2	SPF

DRY: SEASONED LUMBER.

PLATES (table is in inches)

JT	TYPE	PLATES	W	LEN	Y	X
B	TMVW+p	MT20	4.0	6.0	2.75	2.00
C	TTW+p	MT20	4.0	6.0	Edge	
D	TMVW+p	MT20	4.0	6.0	2.75	2.00
F	BMV1+p	MT20	2.0	4.0		
G	BMWWW-t	MT20	4.0	6.0		
H	BMV1+p	MT20	2.0	4.0		

Edge - INDICATES REFERENCE CORNER OF PLATE TOUCHES EDGE OF CHORD.

NOTE: Lateral brace(s) shown shall be 2x4 SPF #2

LICENSED PROFESSIONAL ENGINEER
11/08/2019
R. TURENNE
100157040
PROVINCE OF ONTARIO

DIMENSIONS, SUPPORTS AND LOADINGS SPECIFIED BY FABRICATOR TO BE VERIFIED BY BUILDING DESIGNER

BEARINGS

JT	FACTORED GROSS REACTION VERT	HORZ	MAXIMUM FACTORED GROSS REACTION DOWN	HORZ	UPLIFT	INPUT BRG IN-SX	REQRD BRG IN-SX
H	769	0	769	0	0	5-8	1-8
F	769	0	769	0	0	5-8	1-8

UNFACTORED REACTIONS

JT	1ST LCASE COMBINED	MAX./MIN. COMPONENT REACTIONS SNOW	LIVE	PERM.LIVE	WIND	DEAD	SOIL
H	544	359 / 0	0 / 0	0 / 0	0 / 0	185 / 0	0 / 0
F	544	359 / 0	0 / 0	0 / 0	0 / 0	185 / 0	0 / 0

BEARING MATERIAL TO BE SPF NO.2 OR BETTER AT JOINT(S) H, F

BRACING
TOP CHORD TO BE SHEATHED OR MAX. PURLIN SPACING = 6.25 FT.
MAX. UNBRACED BOTTOM CHORD LENGTH = 10.00 FT OR RIGID CEILING DIRECTLY APPLIED.

ALL PITCH BREAKS AND PERIMETER CORNER JOINTS MUST BE LATERALLY RESTRAINED.

LOADING
TOTAL LOAD CASES: (4)

CHORDS

MEMB. FR-TO	MAX. FACTORED FORCE (LBS)	FACTORED VERT. LOAD (PLF) FROM	TO	LC1 MAX CSI (LC)	MAX. UNBRAC LENGTH
A- B	0 / 44	-84.9	-84.9	0.07 (1)	10.00
B- C	-389 / 0	-84.9	-84.9	0.21 (1)	6.25
C- D	-389 / 0	-84.9	-84.9	0.21 (1)	6.25
D- E	0 / 44	-84.9	-84.9	0.07 (1)	10.00
H- B	-726 / 0	0.0	0.0	0.08 (1)	7.81
F- D	-726 / 0	0.0	0.0	0.08 (1)	7.81
H- G	0 / 0	-18.5	-18.5	0.21 (4)	10.00
G- F	0 / 0	-18.5	-18.5	0.21 (4)	10.00

WEBS

MEMB. FR-TO	MAX. FACTORED FORCE (LBS)	MAX CSI (LC)
G- C	0 / 112	0.04 (4)
B- G	0 / 282	0.06 (1)
G- D	0 / 282	0.06 (1)

DESIGN CRITERIA

SPECIFIED LOADS:

TOP CH.	LL	=	23.3	PSF
	DL	=	6.0	PSF
BOT CH.	LL	=	0.0	PSF
	DL	=	7.4	PSF
TOTAL LOAD		=	36.7	PSF

SPACING = 24.0 IN. C/C

THIS TRUSS IS DESIGNED FOR RESIDENTIAL OR SMALL BUILDING REQUIREMENTS OF PART 9, NBCC 2010, NBCC 2015

THIS DESIGN COMPLIES WITH:
- PART 9 OF BCBC 2018 , OBC 2012 , ABC 2019
- CSA 086-09, CSA 086-14
- TPIC 2011, TPIC 2014

(55 % OF 27.2 P.S.F. G.S.L. PLUS 8.4 P.S.F. RAIN LOAD) EQUALS 23.3 P.S.F. SPECIFIED ROOF LIVE LOAD

ALLOWABLE DEFL.(LL)= L/360 (0.42")
CALCULATED VERT. DEFL.(LL) = L/ 999 (0.00")
ALLOWABLE DEFL.(TL)= L/360 (0.42")
CALCULATED VERT. DEFL.(TL) = L/ 999 (0.03")

CSI: TC=0.21/1.00 (C-D:1) , BC=0.21/1.00 (G-H:4) , WB=0.06/1.00 (D-G:1) , SSI=0.11/1.00 (C-D:1)

DOL LUMBER=1.00 NAIL=1.00 LS BEND=1.10 COMP=1.10 SHEAR=1.10 TENS= 1.10

COMPANION LIVE LOAD FACTOR = 1.00

TRUSS PLATE MANUFACTURER IS NOT RESPONSIBLE FOR QUALITY CONTROL IN THE TRUSS MANUFACTURING PLANT .

NAIL VALUES

PLATE	GRIP(DRY) (PSI) MAX	MIN	SHEAR (PLI) MAX	MIN	SECTION (PLI) MAX	MIN
MT20	618	354	1667	788	1987	1656

PLATE PLACEMENT TOL. = 0.250 inches

PLATE ROTATION TOL. = 5.0 Deg.

JSI GRIP= 0.51 (B) (INPUT = 0.90)
JSI METAL= 0.25 (B) (INPUT = 1.00)

JOB NAME	TRUSS NAME	QUANTITY	PLY	JOB DESC.	DRWG NO.
313989	H10B		1	TRUSS DESC. JT-39002	E-19112495

Alpa Roof Truss, Maple

Version 8.300 S Aug 9 2019 MiTek Industries, Inc. Fri Nov 8 11:48:46 2019 Page 1

ID:VRLqmcIDiflZCj2mk6F92VyQuye-QlnwyjETkx7tk27wojXcqJJqPnHoEx7DWgLZksyLGUF

Scale = 1:49.1

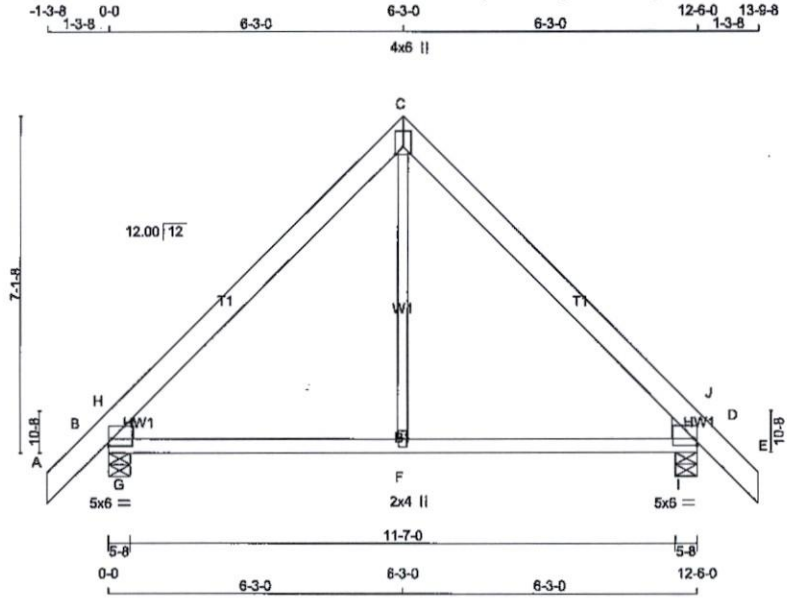

TOTAL WEIGHT = 2 X 61 = 122 lb

[M][F]

LUMBER

N. L. G. A. RULES

CHORDS	SIZE		LUMBER	DESCR.
A - C	2x6	DRY	No.2	SPF
C - E	2x6	DRY	No.2	SPF
B - D	2x4	DRY	No.2	SPF
ALL WEBS	2x3	DRY	No.2	SPF

DRY: SEASONED LUMBER.

PLATES (table is in inches)

JT	TYPE	PLATES	W	LEN	Y	X
B	TMBH1-I	MT20	5.0	6.0	1.75	Edge
C	TTW+p	MT20	4.0	6.0	Edge	
D	TMBH1-I	MT20	5.0	6.0	1.75	Edge
F	BMW+w	MT20	2.0	4.0		

Edge - INDICATES REFERENCE CORNER OF PLATE TOUCHES EDGE OF CHORD.

NOTE: Lateral brace(s) shown shall be 2x4 SPF #2

LICENSED PROFESSIONAL ENGINEER
11/08/2019
R. TURENNE
100157040
PROVINCE OF ONTARIO

DIMENSIONS, SUPPORTS AND LOADINGS SPECIFIED BY FABRICATOR TO BE VERIFIED BY BUILDING DESIGNER

BEARINGS

JT	FACTORED GROSS REACTION VERT	HORZ	MAXIMUM FACTORED GROSS REACTION DOWN	HORZ	UPLIFT	INPUT BRG IN-SX	REQRD BRG IN-SX	HEEL WEDGE
B	769	0	769	0	0	5-8	1-8	2x6 L
D	769	0	769	0	0	5-8	1-8	2x6 R

UNFACTORED REACTIONS

JT	1ST LCASE COMBINED	MAX./MIN. COMPONENT REACTIONS SNOW	LIVE	PERM.LIVE	WIND	DEAD	SOIL
B	544	359 / 0	0 / 0	0 / 0	0 / 0	185 / 0	0 / 0
D	544	359 / 0	0 / 0	0 / 0	0 / 0	185 / 0	0 / 0

BEARING MATERIAL TO BE SPF NO.2 OR BETTER AT JOINT(S) B, D

BRACING

TOP CHORD TO BE SHEATHED OR MAX. PURLIN SPACING = 6.25 FT.
MAX. UNBRACED BOTTOM CHORD LENGTH = 10.00 FT OR RIGID CEILING DIRECTLY APPLIED.

ALL PITCH BREAKS AND PERIMETER CORNER JOINTS MUST BE LATERALLY RESTRAINED.

LOADING

TOTAL LOAD CASES: (4)

CHORDS

MEMB. FR-TO	MAX. FACTORED FORCE (LBS)	FACTORED VERT. LOAD (PLF) FROM	TO	LC1 MAX CSI (LC)	MAX. UNBRAC LENGTH
A- B	0 / 36	-84.9	-84.9	0.06 (1)	10.00
B- H	-474 / 0	-84.9	-84.9	0.06 (1)	6.25
H- C	-468 / 0	-84.9	-84.9	0.21 (1)	6.25
C- J	-468 / 0	-84.9	-84.9	0.21 (1)	6.25
J- D	-474 / 0	-84.9	-84.9	0.06 (1)	6.25
D- E	0 / 36	-84.9	-84.9	0.06 (1)	10.00
B- G	0 / 322	-18.5	-18.5	0.14 (1)	10.00
G- F	0 / 322	-18.5	-18.5	0.22 (1)	10.00
F- I	0 / 322	-18.5	-18.5	0.22 (1)	10.00
I- D	0 / 322	-18.5	-18.5	0.14 (1)	10.00

WEBS

MEMB. FR-TO	MAX. FACTORED FORCE (LBS)	MAX CSI (LC)
F- C	0 / 174	0.05 (4)
G- H	-224 / 133	0.00 (1)
I- J	-224 / 133	0.00 (1)

DESIGN CRITERIA

SPECIFIED LOADS:

TOP CH.	LL =	23.3	PSF
	DL =	6.0	PSF
BOT CH.	LL =	0.0	PSF
	DL =	7.4	PSF
TOTAL LOAD	=	36.7	PSF

SPACING = 24.0 IN. C/C

THIS TRUSS IS DESIGNED FOR RESIDENTIAL OR SMALL BUILDING REQUIREMENTS OF PART 9, NBCC 2010, NBCC 2015

THIS DESIGN COMPLIES WITH:
- PART 9 OF BCBC 2018 , OBC 2012 , ABC 2019
- CSA 086-09, CSA 086-14
- TPIC 2011, TPIC 2014

(55 % OF 27.2 P.S.F. G.S.L. PLUS 8.4 P.S.F. RAIN LOAD) EQUALS 23.3 P.S.F. SPECIFIED ROOF LIVE LOAD

ALLOWABLE DEFL.(LL)= L/360 (0.42")
CALCULATED VERT. DEFL.(LL) = L/ 999 (0.02")
ALLOWABLE DEFL.(TL)= L/360 (0.42")
CALCULATED VERT. DEFL.(TL) = L/ 999 (0.04")

CSI: TC=0.21/1.00 (C-H:1) , BC=0.22/1.00 (F-G:1) , WB=0.05/1.00 (C-F:4) , SSI=0.20/1.00 (D-I:1)

DOL LUMBER=1.00 NAIL=1.00 LS BEND=1.10 COMP=1.10 SHEAR=1.10 TENS= 1.10

COMPANION LIVE LOAD FACTOR = 1.00

TRUSS PLATE MANUFACTURER IS NOT RESPONSIBLE FOR QUALITY CONTROL IN THE TRUSS MANUFACTURING PLANT .

NAIL VALUES

PLATE	GRIP(DRY) (PSI) MAX	MIN	SHEAR (PLI) MAX	MIN	SECTION (PLI) MAX	MIN
MT20	618	354	1667	788	1987	1656

PLATE PLACEMENT TOL. = 0.250 inches

PLATE ROTATION TOL. = 5.0 Deg.

JSI GRIP= 0.68 (D) (INPUT = 0.90)
JSI METAL= 0.14 (D) (INPUT = 1.00)

JOB NAME	TRUSS NAME	QUANTITY	PLY	JOB DESC.	DRWG NO.
313989	H10BG		1	TRUSS DESC. JT-39002	E-19112496

Alpa Roof Truss, Maple

Version 8.300 S Aug 9 2019 MiTek Industries, Inc. Fri Nov 8 11:48:47 2019 Page 1

ID:VRLqmclDiflZC|2mk6F92VyQuye-uxLJ93F5VEFkMCi6MQ2rMWs1cAf6zNgNlK56GlyLGUE

Scale = 1:45.5

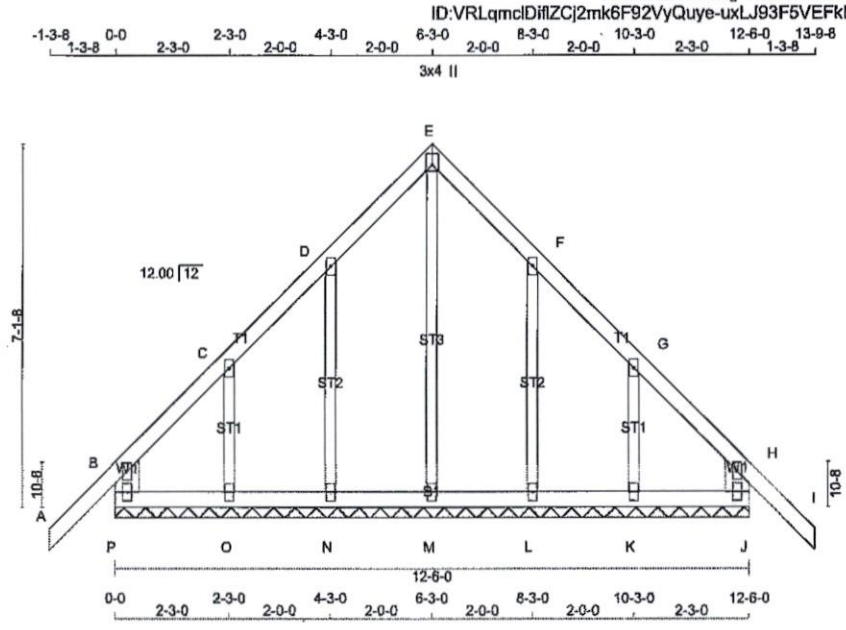

TOTAL WEIGHT = 58 lb

[M]

LUMBER

N. L. G. A. RULES

CHORDS	SIZE		LUMBER	DESCR.
A - E	2x4	DRY	No.2	SPF
E - I	2x4	DRY	No.2	SPF
P - B	2x6	DRY	No.2	SPF
J - H	2x6	DRY	No.2	SPF
P - J	2x4	DRY	No.2	SPF
ALL WEBS	2x3	DRY	No.2	SPF
ALL GABLE WEBS	2x3	DRY	No.2	SPF

DRY: SEASONED LUMBER.

GABLE STUDS SPACED AT 2-0-0 OC.

PLATES (table is in inches)

JT	TYPE	PLATES	W	LEN	Y	X
B	TMV+p	MT20	2.0	4.0		
C, D, F, G						
C	TMW+w	MT20	2.0	4.0		
E	TTW+p	MT20	3.0	4.0	Edge	
H	TMV+p	MT20	2.0	4.0		
J	BMV1+p	MT20	2.0	4.0		
K, L, M, N, O						
K	BMW1+w	MT20	2.0	4.0		
P	BMV1+p	MT20	2.0	4.0		

Edge - INDICATES REFERENCE CORNER OF PLATE TOUCHES EDGE OF CHORD.

NOTE: Lateral brace(s) shown shall be 2x4 SPF #2

LICENSED PROFESSIONAL ENGINEER
11/08/2019
R TURENNE
100157040
PROVINCE OF ONTARIO

DIMENSIONS, SUPPORTS AND LOADINGS SPECIFIED BY FABRICATOR TO BE VERIFIED BY BUILDING DESIGNER

BEARINGS

THIS TRUSS DESIGNED FOR CONTINUOUS BEARINGS.

THIS TRUSS REQUIRES RIGID SHEATHING ON EXPOSED FACE.

BEARING MATERIAL TO BE SPF NO.2 OR BETTER AT JOINT(S)

BRACING

TOP CHORD TO BE SHEATHED OR MAX. PURLIN SPACING = 6.25 FT.
MAX. UNBRACED BOTTOM CHORD LENGTH = 10.00 FT OR RIGID CEILING DIRECTLY APPLIED.

ALL PITCH BREAKS AND PERIMETER CORNER JOINTS MUST BE LATERALLY RESTRAINED.

LOADING

TOTAL LOAD CASES: (4)

CHORDS

MEMB. FR-TO	MAX. FACTORED FORCE (LBS)	FACTORED VERT. LOAD LC1 (PLF) FROM	TO	MAX CSI (LC)	MAX. UNBRAC LENGTH
A- B	0 / 42	-84.9	-84.9	0.12 (1)	10.00
B- C	-66 / 0	-84.9	-84.9	0.05 (1)	6.25
C- D	-55 / 0	-84.9	-84.9	0.04 (1)	6.25
D- E	-48 / 0	-84.9	-84.9	0.05 (1)	6.25
E- F	-48 / 0	-84.9	-84.9	0.05 (1)	6.25
F- G	-55 / 0	-84.9	-84.9	0.04 (1)	6.25
G- H	-66 / 0	-84.9	-84.9	0.05 (1)	6.25
H- I	0 / 42	-84.9	-84.9	0.12 (1)	10.00
P- B	-257 / 0	0.0	0.0	0.01 (1)	7.81
J- H	-257 / 0	0.0	0.0	0.01 (1)	7.81
P- O	0 / 45	-18.5	-18.5	0.02 (4)	10.00
O- N	0 / 39	-18.5	-18.5	0.02 (4)	10.00
N- M	0 / 35	-18.5	-18.5	0.02 (4)	10.00
M- L	0 / 35	-18.5	-18.5	0.02 (4)	10.00
L- K	0 / 39	-18.5	-18.5	0.02 (4)	10.00
K- J	0 / 45	-18.5	-18.5	0.02 (4)	10.00

WEBS

MEMB. FR-TO	MAX. FACTORED FORCE (LBS)	MAX CSI (LC)
M- E	-113 / 0	0.10 (1)
N- D	-167 / 0	0.06 (1)
O- C	-168 / 0	0.03 (1)
L- F	-167 / 0	0.06 (1)
K- G	-168 / 0	0.03 (1)

DESIGN CRITERIA

SPECIFIED LOADS:

TOP CH.	LL =	23.3	PSF
	DL =	6.0	PSF
BOT CH.	LL =	0.0	PSF
	DL =	7.4	PSF
TOTAL LOAD	=	36.7	PSF

SPACING = 24.0 IN. C/C

THIS TRUSS IS DESIGNED FOR RESIDENTIAL OR SMALL BUILDING REQUIREMENTS OF PART 9, NBCC 2010, NBCC 2015

THIS DESIGN COMPLIES WITH:
- PART 9 OF BCBC 2018 , OBC 2012 , ABC 2019
- CSA 086-09, CSA 086-14
- TPIC 2011, TPIC 2014

DESIGN ASSUMPTIONS
-OVERHANG NOT TO BE ALTERED OR CUT OFF.

(55 % OF 27.2 P.S.F. G.S.L. PLUS 8.4 P.S.F. RAIN LOAD) EQUALS 23.3 P.S.F. SPECIFIED ROOF LIVE LOAD

CSI: TC=0.12/1.00 (H-I:1) , BC=0.02/1.00 (J-K:4) , WB=0.10/1.00 (E-M:1) , SSI=0.07/1.00 (H-I:1)

DOL LUMBER=1.00 NAIL=1.00 LS BEND=1.10 COMP=1.10 SHEAR=1.10 TENS= 1.10

COMPANION LIVE LOAD FACTOR = 1.00

AUTOSOLVE HEELS OFF

TRUSS PLATE MANUFACTURER IS NOT RESPONSIBLE FOR QUALITY CONTROL IN THE TRUSS MANUFACTURING PLANT .

NAIL VALUES

PLATE	GRIP(DRY) (PSI) MAX	MIN	SHEAR (PLI) MAX	MIN	SECTION (PLI) MAX	MIN
MT20	618	354	1667	788	1987	1656

PLATE PLACEMENT TOL. = 0.250 inches

PLATE ROTATION TOL. = 5.0 Deg.

JSI GRIP= 0.24 (B) (INPUT = 0.90)
JSI METAL= 0.16 (B) (INPUT = 1.00)

JOB NAME	TRUSS NAME	QUANTITY	PLY	JOB DESC.	DRWG NO.
313989	H11	1	1	TRUSS DESC. JT-39002	E-19112497

Alpa Roof Truss, Maple

Version 8.300 S Aug 9 2019 MiTek Industries, Inc. Fri Nov 8 11:48:49 2019 Page 1
ID:VRLqmcIDiflZCj2mk6F92VyQuye-rKT3akHL0sVSbVsVTr4JRxxJR_HhR7wfCeaDLByLGUC

Scale = 1:57.6

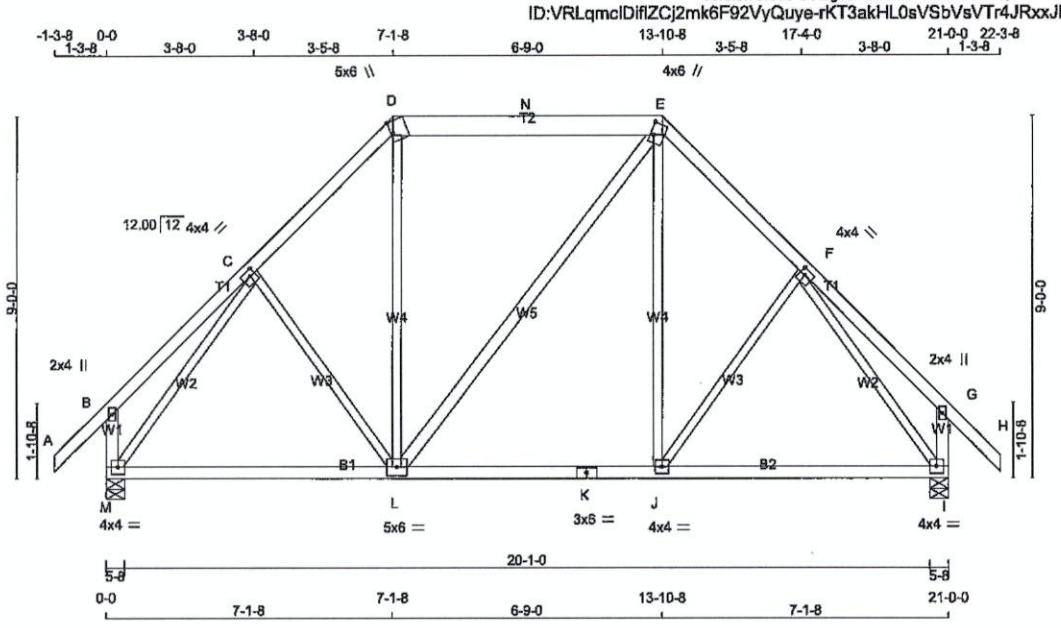

TOTAL WEIGHT = 2 X 112 = 223 lb

[M][F]

LUMBER

N. L. G. A. RULES

CHORDS	SIZE		LUMBER	DESCR.
A - D	2x4	DRY	No.2	SPF
D - E	2x6	DRY	No.2	SPF
E - H	2x4	DRY	No.2	SPF
M - B	2x4	DRY	No.2	SPF
I - G	2x4	DRY	No.2	SPF
M - K	2x4	DRY	No.2	SPF
K - I	2x4	DRY	No.2	SPF
ALL WEBS EXCEPT	2x3	DRY	No.2	SPF
L - E	2x4	DRY	No.2	SPF

DRY: SEASONED LUMBER.

PLATES (table is in inches)

JT	TYPE	PLATES	W	LEN	Y	X
B	TMV+p	MT20	2.0	4.0		
C	TMWW-t	MT20	4.0	4.0	1.75	1.50
D	TTW+m	MT20	5.0	6.0	Edge	0.50
E	TTWW+m	MT20	4.0	6.0	3.75	1.00
F	TMWW-t	MT20	4.0	4.0	1.75	1.50
G	TMV+p	MT20	2.0	4.0		
I	BMVW1-t	MT20	4.0	4.0		
J	BMWW-t	MT20	4.0	4.0		
K	BS-t	MT20	3.0	6.0		
L	BMWWW-t	MT20	5.0	6.0		
M	BMVW1-t	MT20	4.0	4.0		

Edge - INDICATES REFERENCE CORNER OF PLATE TOUCHES EDGE OF CHORD.

NOTE: Lateral brace(s) shown shall be 2x4 SPF #2

LICENSED PROFESSIONAL ENGINEER
11/08/2019
R. TURENNE
100157040
PROVINCE OF ONTARIO

DIMENSIONS, SUPPORTS AND LOADINGS SPECIFIED BY FABRICATOR TO BE VERIFIED BY BUILDING DESIGNER

BEARINGS

JT	FACTORED GROSS REACTION VERT	HORZ	MAXIMUM FACTORED GROSS REACTION DOWN	HORZ	UPLIFT	INPUT BRG IN-SX	REQRD BRG IN-SX
M	1229	0	1229	0	0	5-8	1-8
I	1229	0	1229	0	0	5-8	1-8

UNFACTORED REACTIONS

JT	1ST LCASE COMBINED	MAX./MIN. COMPONENT REACTIONS SNOW	LIVE	PERM.LIVE	WIND	DEAD	SOIL
M	872	554 / 0	0 / 0	0 / 0	0 / 0	318 / 0	0 / 0
I	872	554 / 0	0 / 0	0 / 0	0 / 0	318 / 0	0 / 0

BEARING MATERIAL TO BE SPF NO.2 OR BETTER AT JOINT(S) M, I

BRACING

FOR SECTION D-E, MAX. PURLIN SPACING = 2.00 FT.
FOR OTHER SECTIONS, TOP CHORD TO BE SHEATHED OR MAX. PURLIN SPACING = 6.25 FT.
MAX. UNBRACED BOTTOM CHORD LENGTH = 10.00 FT OR RIGID CEILING DIRECTLY APPLIED.

ALL PITCH BREAKS AND PERIMETER CORNER JOINTS MUST BE LATERALLY RESTRAINED.

LOADING

TOTAL LOAD CASES: (4)

CHORDS

MEMB. FR-TO	MAX. FACTORED FORCE (LBS)	FACTORED VERT. LOAD (PLF) FROM	TO	LC1 CSI (LC)	MAX UNBRAC LENGTH
A- B	0 / 42	-84.9	-84.9	0.12 (1)	10.00
B- C	0 / 25	-84.9	-84.9	0.17 (1)	10.00
C- D	-901 / 0	-84.9	-84.9	0.14 (1)	6.25
D- N	-623 / 0	-92.4	-92.4	0.35 (1)	2.00
N- E	-623 / 0	-92.4	-92.4	0.35 (1)	2.00
E- F	-900 / 0	-84.9	-84.9	0.14 (1)	6.25
F- G	0 / 25	-84.9	-84.9	0.17 (1)	10.00
G- H	0 / 42	-84.9	-84.9	0.12 (1)	10.00
M- B	-233 / 0	0.0	0.0	0.03 (1)	7.81
I- G	-233 / 0	0.0	0.0	0.03 (1)	7.81
M- L	0 / 657	-18.5	-18.5	0.27 (4)	10.00
L- K	0 / 623	-18.5	-18.5	0.27 (4)	10.00
K- J	0 / 623	-18.5	-18.5	0.27 (4)	10.00
J- I	0 / 657	-18.5	-18.5	0.26 (4)	10.00

WEBS

MEMB. FR-TO	MAX. FACTORED FORCE (LBS)	MAX CSI (LC)
C- L	-61 / 22	0.04 (1)
L- D	0 / 188	0.05 (4)
L- E	0 / 0	0.00 (1)
J- E	0 / 188	0.05 (4)
J- F	-61 / 22	0.04 (1)
M- C	-1148 / 0	0.75 (1)
F- I	-1147 / 0	0.75 (1)

DESIGN CRITERIA

SPECIFIED LOADS:

TOP CH.	LL =	23.3	PSF
	DL =	6.0	PSF
BOT CH.	LL =	0.0	PSF
	DL =	7.4	PSF
TOTAL LOAD	=	36.7	PSF

SPACING = 24.0 IN. C/C

LOADING IN FLAT SECTION BASED ON PIGGYBACK TRUSS WITH SLOPES OF 6.00/12 AND -6.00/12 AND RESPECTIVE WALL HEIGHTS OF 0-0 AND 0-0 AND AN ADDITIONAL DEAD LOAD OF 3.0 P.S.F.

THIS TRUSS IS DESIGNED FOR RESIDENTIAL OR SMALL BUILDING REQUIREMENTS OF PART 9, NBCC 2010, NBCC 2015

THIS DESIGN COMPLIES WITH:
- PART 9 OF BCBC 2018 , OBC 2012 , ABC 2019
- CSA 086-09, CSA 086-14
- TPIC 2011, TPIC 2014

(55 % OF 27.2 P.S.F. G.S.L. PLUS 8.4 P.S.F. RAIN LOAD) EQUALS 23.3 P.S.F. SPECIFIED ROOF LIVE LOAD

ALLOWABLE DEFL.(LL)= L/360 (0.70")
CALCULATED VERT. DEFL.(LL) = L/ 999 (0.02")
ALLOWABLE DEFL.(TL)= L/360 (0.70")
CALCULATED VERT. DEFL.(TL) = L/ 999 (0.09")

CSI: TC=0.35/1.00 (D-E:1) , BC=0.27/1.00 (J-L:4) , WB=0.75/1.00 (C-M:1) , SSI=0.19/1.00 (D-E:1)

DOL LUMBER=1.00 NAIL=1.00 LS BEND=1.10 COMP=1.10 SHEAR=1.10 TENS= 1.10

COMPANION LIVE LOAD FACTOR = 1.00

TRUSS PLATE MANUFACTURER IS NOT RESPONSIBLE FOR QUALITY CONTROL IN THE TRUSS MANUFACTURING PLANT .

NAIL VALUES

PLATE	GRIP(DRY) (PSI) MAX	MIN	SHEAR (PLI) MAX	MIN	SECTION (PLI) MAX	MIN
MT20	618	354	1667	788	1987	1656

PLATE PLACEMENT TOL. = 0.250 inches

PLATE ROTATION TOL. = 5.0 Deg.

JSI GRIP= 0.89 (E) (INPUT = 0.90)
JSI METAL= 0.43 (C) (INPUT = 1.00)

JOB NAME	TRUSS NAME	QUANTITY	PLY	JOB DESC.	DRWG NO.
313989	H11A		1	TRUSS DESC. JT-39002	E-19112498

Alpa Roof Truss, Maple

Version 8.300 S Aug 9 2019 MiTek Industries, Inc. Fri Nov 8 11:48:50 2019 Page 1

ID:VRLqmcIDiflZCj2mk6F92VyQuye-JW0Rn4Izn9dJDfRh1ZbY_9UTLOZAAXFpRHJntdyLGUB

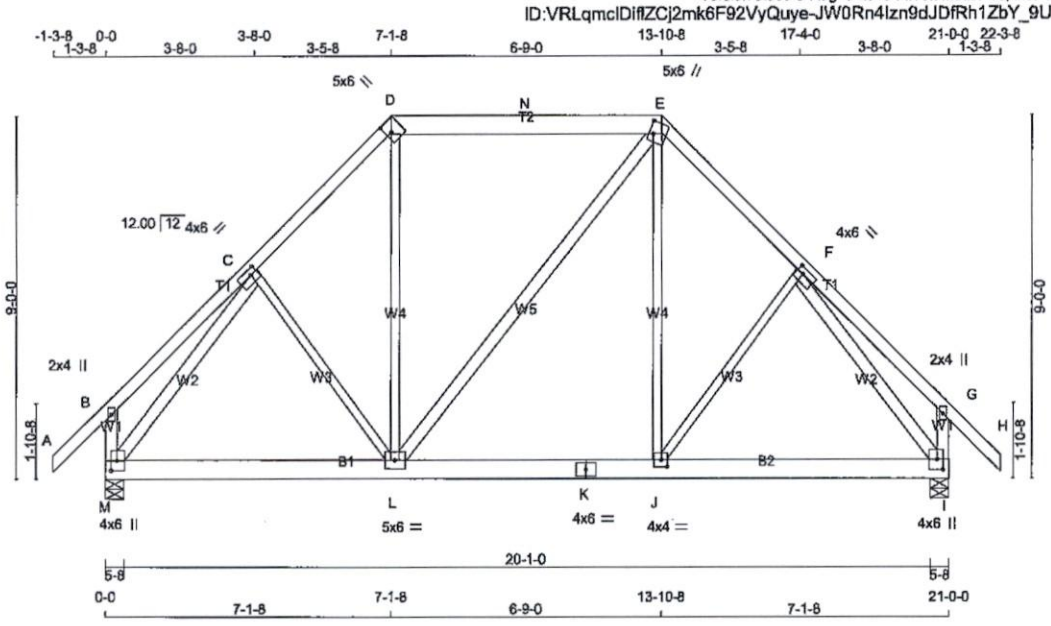

TOTAL WEIGHT = 128 lb [M]

LUMBER

N. L. G. A. RULES

CHORDS	SIZE		LUMBER	DESCR.
A - D	2x4	DRY	No.2	SPF
D - E	2x6	DRY	No.2	SPF
E - H	2x4	DRY	No.2	SPF
M - B	2x4	DRY	No.2	SPF
I - G	2x4	DRY	No.2	SPF
M - K	2x6	DRY	No.2	SPF
K - I	2x6	DRY	No.2	SPF
ALL WEBS	2x4	DRY	No.2	SPF
EXCEPT				
C - L	2x3	DRY	No.2	SPF
L - D	2x3	DRY	No.2	SPF
J - E	2x3	DRY	No.2	SPF
J - F	2x3	DRY	No.2	SPF

DRY: SEASONED LUMBER.

PLATES (table is in inches)

JT	TYPE	PLATES	W	LEN	Y	X
B	TMV+p	MT20	2.0	4.0		
C	TMWW-t	MT20	4.0	6.0	1.75	2.00
D	TTW+h	MT20	5.0	6.0	3.25	1.50
E	TTWW+m	MT20	5.0	6.0	3.75	1.25
F	TMWW-t	MT20	4.0	6.0	1.75	2.00
G	TMV+p	MT20	2.0	4.0		
I	BMVW1+p	MT20	4.0	6.0	3.00	1.75
J	BMWW-t	MT20	4.0	4.0	2.00	1.75
K	BS-t	MT20	4.0	6.0		
L	BMWWW-t	MT20	5.0	6.0		
M	BMVW1+p	MT20	4.0	6.0	3.00	1.75

NOTE: Lateral brace(s) shown shall be 2x4 SPF #2

LICENSED PROFESSIONAL ENGINEER
11/08/2019
R. TURENNE
100157040
PROVINCE OF ONTARIO

DIMENSIONS, SUPPORTS AND LOADINGS SPECIFIED BY FABRICATOR TO BE VERIFIED BY BUILDING DESIGNER

BEARINGS

JT	FACTORED GROSS REACTION VERT	HORZ	MAXIMUM FACTORED GROSS REACTION DOWN	HORZ	UPLIFT	INPUT BRG IN-SX	REQRD BRG IN-SX
M	2280	0	2280	0	0	5-8	2-8
I	2280	0	2280	0	0	5-8	2-8

UNFACTORED REACTIONS

JT	1ST LCASE COMBINED	MAX./MIN. COMPONENT REACTIONS SNOW	LIVE	PERM.LIVE	WIND	DEAD	SOIL
M	1619	1028 / 0	0 / 0	0 / 0	0 / 0	591 / 0	0 / 0
I	1619	1028 / 0	0 / 0	0 / 0	0 / 0	591 / 0	0 / 0

BEARING MATERIAL TO BE SPF NO.2 OR BETTER AT JOINT(S) M, I

BRACING

FOR SECTION D-E, MAX. PURLIN SPACING = 2.00 FT.
FOR OTHER SECTIONS, TOP CHORD TO BE SHEATHED OR MAX. PURLIN SPACING = 4.74 FT.
MAX. UNBRACED BOTTOM CHORD LENGTH = 10.00 FT OR RIGID CEILING DIRECTLY APPLIED.

ALL PITCH BREAKS AND PERIMETER CORNER JOINTS MUST BE LATERALLY RESTRAINED.

LOADING

TOTAL LOAD CASES: (4)

CHORDS

MEMB. FR-TO	MAX. FACTORED FORCE (LBS)	FACTORED VERT. LOAD (PLF) FROM	TO	LC1	MAX CSI (LC)	MAX. UNBRAC LENGTH
A- B	0 / 42	-84.9	-84.9	0.13 (1)		10.00
B- C	0 / 23	-84.9	-84.9	0.18 (1)		10.00
C- D	-1797 / 0	-84.9	-84.9	0.24 (1)		4.74
D- N	-1267 / 0	-92.4	-92.4	0.41 (1)		2.00
N- E	-1267 / 0	-92.4	-92.4	0.41 (1)		2.00
E- F	-1793 / 0	-84.9	-84.9	0.24 (1)		4.74
F- G	0 / 23	-84.9	-84.9	0.18 (1)		10.00
G- H	0 / 42	-84.9	-84.9	0.13 (1)		10.00
M- B	-235 / 0	0.0	0.0	0.03 (1)		7.81
I- G	-235 / 0	0.0	0.0	0.03 (1)		7.81
M- L	0 / 1201	-118.6	-118.6	0.56 (1)		10.00
L- K	0 / 1264	-118.6	-118.6	0.57 (1)		10.00
K- J	0 / 1264	-118.6	-118.6	0.57 (1)		10.00
J- I	0 / 1199	-118.6	-118.6	0.55 (1)		10.00

WEBS

MEMB. FR-TO	MAX. FACTORED FORCE (LBS)	MAX CSI (LC)
C- L	0 / 93	0.03 (4)
L- D	0 / 819	0.20 (1)
L- E	0 / 4	0.00 (1)
J- E	0 / 813	0.20 (1)
J- F	0 / 92	0.03 (4)
M- C	-2076 / 0	0.94 (1)
F- I	-2072 / 0	0.94 (1)

DESIGN CRITERIA

SPECIFIED LOADS:

TOP CH.	LL =	23.3	PSF
	DL =	6.0	PSF
BOT CH.	LL =	0.0	PSF
	DL =	7.4	PSF
TOTAL LOAD	=	36.7	PSF

SPACING = 24.0 IN. C/C

LOADING IN FLAT SECTION BASED ON PIGGYBACK TRUSS WITH SLOPES OF 6.00/12 AND -6.00/12 AND RESPECTIVE WALL HEIGHTS OF 0-0 AND 0-0 AND AN ADDITIONAL DEAD LOAD OF 3.0 P.S.F.

GIRDER TYPE: CStdGirder
START DISTANCE = 0-0
START SPAN CARRIED = 5-10-8
END DISTANCE = 20-11-4
END SPAN CARRIED = 5-10-8
END WALL WIDTH = 0-0
APPLIED TO FRONT SIDE OF BOTTOM CHORD.
- ADDT'L LOADS BASED ON 55 % OF GSL.

THIS TRUSS IS DESIGNED FOR RESIDENTIAL OR SMALL BUILDING REQUIREMENTS OF PART 9, NBCC 2010, NBCC 2015

THIS DESIGN COMPLIES WITH:
- PART 9 OF BCBC 2018 , OBC 2012 , ABC 2019
- CSA 086-09, CSA 086-14
- TPIC 2011, TPIC 2014

(55 % OF 27.2 P.S.F. G.S.L. PLUS 8.4 P.S.F. RAIN LOAD) EQUALS 23.3 P.S.F. SPECIFIED ROOF LIVE LOAD

ALLOWABLE DEFL.(LL)= L/360 (0.70")
CALCULATED VERT. DEFL.(LL) = L/ 999 (0.07")
ALLOWABLE DEFL.(TL)= L/360 (0.70")
CALCULATED VERT. DEFL.(TL) = L/ 999 (0.16")

CSI: TC=0.41/1.00 (D-E:1) , BC=0.57/1.00 (J-L:1) , WB=0.94/1.00 (C-M:1) , SSI=0.34/1.00 (L-M:1)

DOL LUMBER=1.00 NAIL=1.00 LS BEND=1.00 COMP=1.00 SHEAR=1.00 TENS= 1.00

COMPANION LIVE LOAD FACTOR = 1.00

AUTOSOLVE HEELS OFF

TRUSS PLATE MANUFACTURER IS NOT RESPONSIBLE FOR QUALITY CONTROL IN THE TRUSS MANUFACTURING PLANT .

NAIL VALUES

PLATE	GRIP(DRY) (PSI) MAX	MIN	SHEAR (PLI) MAX	MIN	SECTION (PLI) MAX	MIN
MT20	618	354	1667	788	1987	1656

PLATE PLACEMENT TOL. = 0.250 inches

PLATE ROTATION TOL. = 5.0 Deg.

CONTINUED ON PAGE 2

JOB NAME	TRUSS NAME	QUANTITY	PLY	JOB DESC.	DRWG NO.
313989	H11SG		1	TRUSS DESC. JT-39002	E-19112499

Alpa Roof Truss, Maple

Version 8.300 S Aug 9 2019 MiTek Industries, Inc. Fri Nov 8 11:48:52 2019 Page 1
ID:VRLqmclDifIZCj2mk6F92VyQuye-Fv8CCmJEJnu1Szb48_e03aZtJBKweYO6ubotyWyLGU9

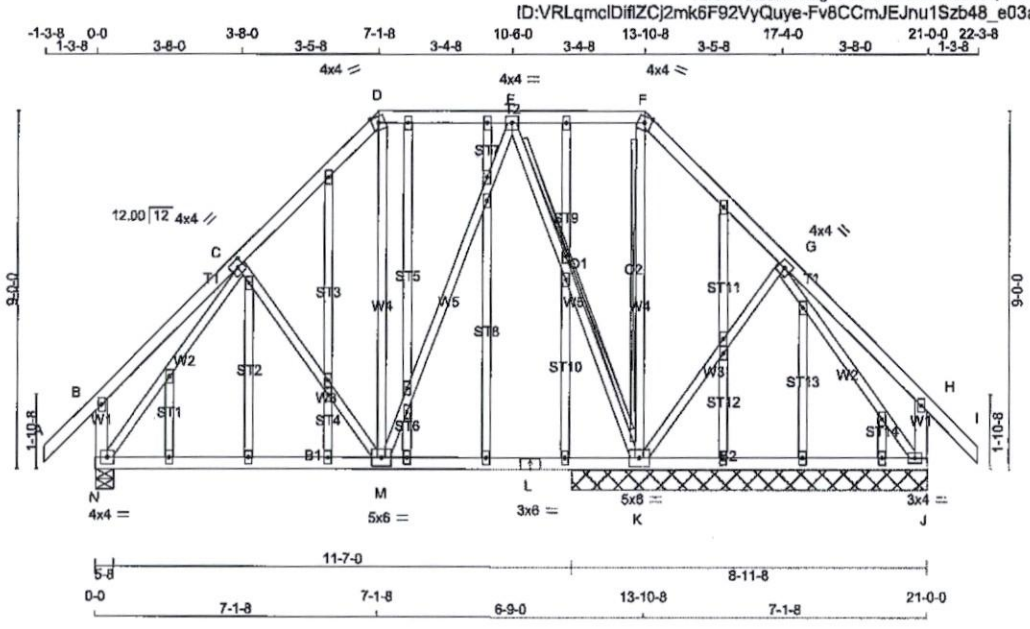

TOTAL WEIGHT = 151 lb

LUMBER
N. L. G. A. RULES

CHORDS	SIZE		LUMBER	DESCR.
A - D	2x4	DRY	No.2	SPF
D - F	2x4	DRY	No.2	SPF
F - I	2x4	DRY	No.2	SPF
N - B	2x4	DRY	No.2	SPF
J - H	2x4	DRY	No.2	SPF
N - L	2x4	DRY	No.2	SPF
L - J	2x4	DRY	No.2	SPF
ALL WEBS EXCEPT	2x3	DRY	No.2	SPF
ALL GABLE WEBS	2x3	DRY	No.2	SPF

DRY: SEASONED LUMBER.

GABLE STUDS SPACED AT 2-0-0 OC.

PLATES (table is in inches)

JT	TYPE	PLATES	W	LEN	Y	X
B	TMV+p	MT20	2.0	4.0		
C	TMWW-t	MT20	4.0	4.0	2.00	1.75
D	TTW-m	MT20	4.0	4.0	Edge	
E	TMWW-t	MT20	4.0	4.0		
F	TTW-m	MT20	4.0	4.0	Edge	
G	TMWW-t	MT20	4.0	4.0		
H	TMV+p	MT20	2.0	4.0		
J	BMVW1-t	MT20	3.0	4.0		
K	BMWWW1-t	MT20	5.0	6.0		
L	BS-t	MT20	3.0	6.0		
M	BMWWW-t	MT20	5.0	6.0		
N	BMVW1-t	MT20	4.0	4.0		

O, P, Q, Q, R, R, S, T, U, U, V, W, X, X, Y, Z, AA, AB, AC, AD, AE, AF, AG, AG, AH, AI, AJ, AK

O	NP+w	MT20	2.0	4.0

Edge - INDICATES REFERENCE CORNER OF PLATE TOUCHES EDGE OF CHORD.

NOTE: Lateral brace(s) shown shall be 2x4 SPF #2

LICENSED PROFESSIONAL ENGINEER
11/08/2019
R. TURENNE
100157040
PROVINCE OF ONTARIO

DIMENSIONS, SUPPORTS AND LOADINGS SPECIFIED BY FABRICATOR TO BE VERIFIED BY BUILDING DESIGNER

BEARINGS

JT	FACTORED GROSS REACTION VERT	HORZ	MAXIMUM FACTORED GROSS REACTION DOWN	HORZ	UPLIFT	INPUT BRG IN-SX	REQRD BRG IN-SX
K	1200	0	1200	0	0	8-11-8	1-10-10
N	816	0	816	0	0	5-8	1-8
J	442	0	442	0	0	8-11-8	1-10-10

UNFACTORED REACTIONS

JT	1ST LCASE COMBINED	MAX./MIN. COMPONENT REACTIONS SNOW	LIVE	PERM.LIVE	WIND	DEAD	SOIL
K	856	519 / 0	0 / 0	0 / 0	0 / 0	336 / 0	0 / 0
N	578	375 / 0	0 / 0	0 / 0	0 / 0	203 / 0	0 / 0
J	311	213 / 0	0 / 0	0 / 0	0 / 0	98 / 0	0 / 0

BEARING MATERIAL TO BE SPF NO.2 OR BETTER AT JOINT(S) K, N, J

BRACING
FOR SECTION D-F, MAX. PURLIN SPACING = 2.00 FT.
FOR OTHER SECTIONS, TOP CHORD TO BE SHEATHED OR MAX. PURLIN SPACING = 6.25 FT.
MAX. UNBRACED BOTTOM CHORD LENGTH = 10.00 FT OR RIGID CEILING DIRECTLY APPLIED.

ALL PITCH BREAKS AND PERIMETER CORNER JOINTS MUST BE LATERALLY RESTRAINED.

2x4 DRY SPF No.2 T-BRACE AT E-K, F-K

FASTEN T AND I-BRACES TO NARROW EDGE OF WEB WITH ONE ROW PER PLY OF 3" COMMON WIRE NAILS @ 6" O.C. WITH 3" MINIMUM END DISTANCE. BRACE MUST COVER 90% OF WEB LENGTH.

END VERTICAL(S) MUST BE SHEATHED OR HAVE BRACES AS INDICATED IN THE MAX. UNBRACED LENGTH COLUMN OF THE TABLE BELOW

LOADING
TOTAL LOAD CASES: (4)

CHORDS

MEMB. FR-TO	MAX. FACTORED FORCE (LBS)	FACTORED VERT. LOAD LC1 (PLF) FROM	TO	MAX CSI (LC)	MAX. UNBRAC LENGTH
A- B	0 / 42	-84.9	-84.9	0.12 (1)	10.00
B- C	0 / 26	-84.9	-84.9	0.18 (1)	10.00
C- D	-419 / 0	-84.9	-84.9	0.18 (1)	6.25
D- E	-278 / 0	-92.4	-92.4	0.18 (1)	2.00
E- F	0 / 32	-92.4	-92.4	0.18 (1)	2.00
F- G	0 / 15	-84.9	-84.9	0.18 (1)	10.00
G- H	0 / 27	-84.9	-84.9	0.19 (1)	10.00
H- I	0 / 42	-84.9	-84.9	0.12 (1)	10.00
N- B	-231 / 0	0.0	0.0	0.03 (1)	7.81
J- H	-230 / 0	0.0	0.0	0.03 (1)	7.81
N- M	0 / 369	-18.5	-18.5	0.23 (4)	10.00
M- L	0 / 195	-18.5	-18.5	0.23 (4)	10.00
L- K	0 / 195	-18.5	-18.5	0.23 (4)	10.00
K- J	0 / 111	-18.5	-18.5	0.22 (4)	10.00

WEBS

MEMB. FR-TO	MAX. FACTORED FORCE (LBS)	MAX CSI (LC)
C- M	-155 / 0	0.11 (1)
M- D	0 / 58	0.02 (4)
M- E	0 / 235	0.05 (1)
E- K	-647 / 0	0.45 (1)
K- F	-263 / 0	0.16 (1)
K- G	-235 / 0	0.17 (1)
N- C	-645 / 0	0.42 (1)
G- J	-194 / 0	0.13 (1)

DESIGN CRITERIA

SPECIFIED LOADS:

TOP CH.	LL	=	23.3	PSF
	DL	=	6.0	PSF
BOT CH.	LL	=	0.0	PSF
	DL	=	7.4	PSF
TOTAL LOAD		=	36.7	PSF

SPACING = 24.0 IN. C/C

LOADING IN FLAT SECTION BASED ON PIGGYBACK TRUSS WITH SLOPES OF 6.00/12 AND -6.00/12 AND RESPECTIVE WALL HEIGHTS OF 0-0 AND 0-0 AND AN ADDITIONAL DEAD LOAD OF 3.0 P.S.F.

THIS TRUSS IS DESIGNED FOR RESIDENTIAL OR SMALL BUILDING REQUIREMENTS OF PART 9, NBCC 2010, NBCC 2015

THIS DESIGN COMPLIES WITH:
- PART 9 OF BCBC 2018 , OBC 2012 , ABC 2019
- CSA 086-09, CSA 086-14
- TPIC 2011, TPIC 2014

(55 % OF 27.2 P.S.F. G.S.L. PLUS 8.4 P.S.F. RAIN LOAD) EQUALS 23.3 P.S.F. SPECIFIED ROOF LIVE LOAD

ALLOWABLE DEFL.(LL)= L/360 (0.46")
CALCULATED VERT. DEFL.(LL) = L/ 999 (0.01")
ALLOWABLE DEFL.(TL)= L/360 (0.46")
CALCULATED VERT. DEFL.(TL) = L/ 999 (0.08")

CSI: TC=0.19/1.00 (G-H:1) , BC=0.23/1.00 (M-N:4) , WB=0.45/1.00 (E-K:1) , SSI=0.15/1.00 (D-E:1)

DOL LUMBER=1.00 NAIL=1.00 LS BEND=1.10 COMP=1.10 SHEAR=1.10 TENS= 1.10

COMPANION LIVE LOAD FACTOR = 1.00

TRUSS PLATE MANUFACTURER IS NOT RESPONSIBLE FOR QUALITY CONTROL IN THE TRUSS MANUFACTURING PLANT .

NAIL VALUES

PLATE	GRIP(DRY) (PSI) MAX	MIN	SHEAR (PLI) MAX	MIN	SECTION (PLI) MAX	MIN
MT20	618	354	1667	788	1987	1656

PLATE PLACEMENT TOL. = 0.250 inches

PLATE ROTATION TOL. = 5.0 Deg.

JSI GRIP= 0.77 (J) (INPUT = 0.90)
JSI METAL= 0.25 (C) (INPUT = 1.00)

JOB NAME	TRUSS NAME	QUANTITY	PLY	JOB DESC.	DRWG NO.
313989	H12P		1	TRUSS DESC. JT-39002	E-19112500

Alpa Roof Truss, Maple

Version 8.300 S Aug 9 2019 MiTek Industries, Inc. Fri Nov 8 11:48:53 2019 Page 1
ID:VRLqmclDiflZCj2mk6F92VyQuye-j5iaQ6Ks440u47AGih9Fcn63Bbh7N6eF7FYRUyyLGU8

Scale: 1/2"=1'

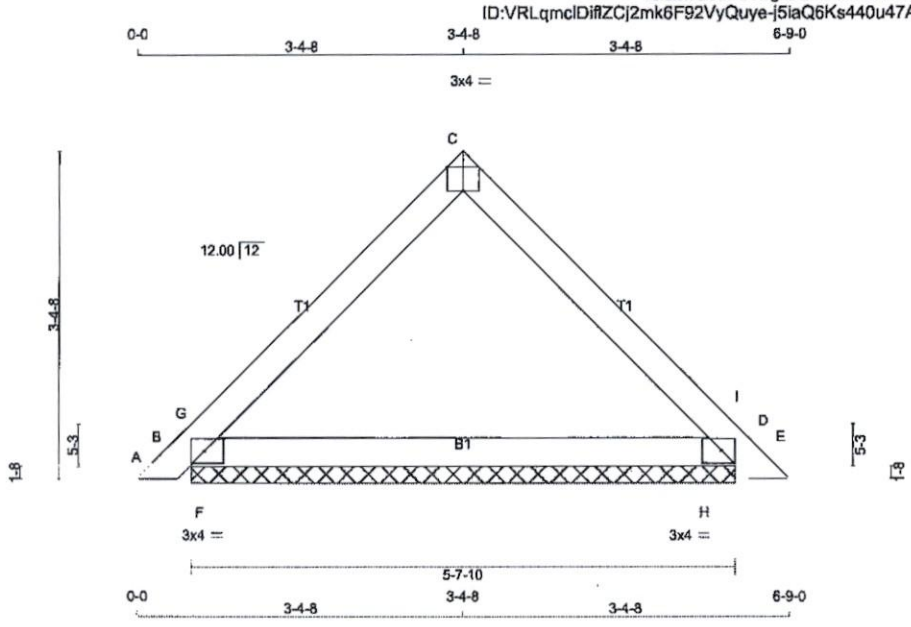

TOTAL WEIGHT = 3 X 17 = 52 lb

LUMBER
N. L. G. A. RULES

CHORDS	SIZE		LUMBER	DESCR.
A - C	2x4	DRY	No.2	SPF
C - E	2x4	DRY	No.2	SPF
B - D	2x4	DRY	No.2	SPF

DRY: SEASONED LUMBER.

PLATES (table is in inches)

JT	TYPE	PLATES	W	LEN	Y	X
B	TMB1-I	MT20	3.0	4.0	1.50	2.50
C	TT-p	MT20	3.0	4.0	Edge	2.00
D	TMB1-I	MT20	3.0	4.0	1.50	2.50

Edge - INDICATES REFERENCE CORNER OF PLATE TOUCHES EDGE OF CHORD.

NOTE: Lateral brace(s) shown shall be 2x4 SPF #2

DIMENSIONS, SUPPORTS AND LOADINGS SPECIFIED BY FABRICATOR TO BE VERIFIED BY BUILDING DESIGNER

BEARINGS

JT	FACTORED GROSS REACTION VERT	HORZ	MAXIMUM FACTORED GROSS REACTION DOWN	HORZ	UPLIFT	INPUT BRG IN-SX	REQRD BRG IN-SX
B	329	0	329	0	0	5-7-10	1-8
D	329	0	329	0	0	5-7-10	1-8

UNFACTORED REACTIONS

JT	1ST LCASE COMBINED	MAX./MIN. COMPONENT REACTIONS SNOW	LIVE	PERM.LIVE	WIND	DEAD	SOIL
B	233	152 / 0	0 / 0	0 / 0	0 / 0	81 / 0	0 / 0
D	233	152 / 0	0 / 0	0 / 0	0 / 0	81 / 0	0 / 0

BEARING MATERIAL TO BE SPF NO.2 OR BETTER AT JOINT(S) B, D

BRACING
TOP CHORD TO BE SHEATHED OR MAX. PURLIN SPACING = 6.25 FT.
MAX. UNBRACED BOTTOM CHORD LENGTH = 10.00 FT OR RIGID CEILING DIRECTLY APPLIED.

ALL PITCH BREAKS AND PERIMETER CORNER JOINTS MUST BE LATERALLY RESTRAINED.

LOADING
TOTAL LOAD CASES: (4)

CHORDS

MEMB. FR-TO	MAX. FACTORED FORCE (LBS)	FACTORED VERT. LOAD LC1 (PLF) FROM	TO	MAX CSI (LC)	MAX. UNBRAC LENGTH
A- B	0 / 12	-84.9	-84.9	0.01 (1)	10.00
B- G	-294 / 0	-84.9	-84.9	0.07 (4)	6.25
G- C	-163 / 0	-84.9	-84.9	0.11 (1)	6.25
C- I	-163 / 0	-84.9	-84.9	0.11 (1)	6.25
I- D	-294 / 0	-84.9	-84.9	0.07 (4)	6.25
D- E	0 / 12	-84.9	-84.9	0.01 (1)	10.00
B- F	0 / 119	-18.5	-18.5	0.06 (4)	10.00
F- H	0 / 119	-18.5	-18.5	0.11 (4)	10.00
H- D	0 / 119	-18.5	-18.5	0.06 (4)	10.00

WEBS

MEMB. FR-TO	MAX. FACTORED FORCE (LBS)	MAX CSI (LC)
F- G	0 / 170	0.00 (1)
H- I	0 / 170	0.00 (1)

DESIGN CRITERIA

SPECIFIED LOADS:

TOP CH.	LL	=	23.3	PSF
	DL	=	6.0	PSF
BOT CH.	LL	=	0.0	PSF
	DL	=	7.4	PSF
TOTAL LOAD		=	36.7	PSF

SPACING = 24.0 IN. C/C

THIS TRUSS IS DESIGNED FOR RESIDENTIAL OR SMALL BUILDING REQUIREMENTS OF PART 9, NBCC 2010, NBCC 2015

THIS DESIGN COMPLIES WITH:
- PART 9 OF BCBC 2018 , OBC 2012 , ABC 2019
- CSA 086-09, CSA 086-14
- TPIC 2011, TPIC 2014

(55 % OF 27.2 P.S.F. G.S.L. PLUS 8.4 P.S.F. RAIN LOAD) EQUALS 23.3 P.S.F. SPECIFIED ROOF LIVE LOAD

CSI: TC=0.11/1.00 (C-I:1) , BC=0.11/1.00 (F-H:4) , WB=0.00/1.00 (F-G:1) , SSI=0.14/1.00 (B-F:4)

DOL LUMBER=1.00 NAIL=1.00 LS BEND=1.10 COMP=1.10 SHEAR=1.10 TENS= 1.10

COMPANION LIVE LOAD FACTOR = 1.00

TRUSS PLATE MANUFACTURER IS NOT RESPONSIBLE FOR QUALITY CONTROL IN THE TRUSS MANUFACTURING PLANT .

NAIL VALUES

PLATE	GRIP(DRY) (PSI) MAX	MIN	SHEAR (PLI) MAX	MIN	SECTION (PLI) MAX	MIN
MT20	618	354	1667	788	1987	1656

PLATE PLACEMENT TOL. = 0.250 inches

PLATE ROTATION TOL. = 5.0 Deg.

JSI GRIP= 0.28 (B) (INPUT = 0.90)
JSI METAL= 0.07 (B) (INPUT = 1.00)

JOB NAME	TRUSS NAME	QUANTITY	PLY	JOB DESC.	DRWG NO.
313989	H12PG		1	TRUSS DESC. JT-39002	E-19112501

Alpa Roof Truss, Maple

Version 8.300 S Aug 9 2019 MiTek Industries, Inc. Fri Nov 8 11:48:55 2019 Page 1
ID:VRLqmcIDiflZCj2mk6F92VyQuye-fTqKroL6ciGcJQJfq6BjhCBP7POar0uYbZ1YYryLGU6

Scale = 1:24.8

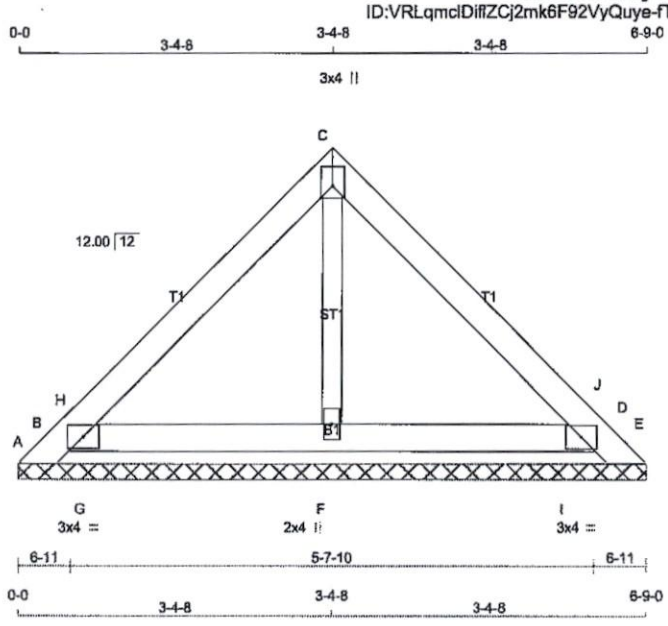

TOTAL WEIGHT = 19 lb
[M]

LUMBER
N. L. G. A. RULES

CHORDS	SIZE		LUMBER	DESCR.
A - C	2x4	DRY	No.2	SPF
C - E	2x4	DRY	No.2	SPF
B - D	2x4	DRY	No.2	SPF
ALL WEBS	2x3	DRY	No.2	SPF
ALL GABLE WEBS	2x3	DRY	No.2	SPF

DRY: SEASONED LUMBER.

GABLE STUDS SPACED AT 2-0-0 OC.

PLATES (table is in inches)

JT	TYPE	PLATES	W	LEN	Y	X
B	TMB1-I	MT20	3.0	4.0		
C	TTW+p	MT20	3.0	4.0	Edge	
D	TMB1-I	MT20	3.0	4.0		
F	BMW1+w	MT20	2.0	4.0		

Edge - INDICATES REFERENCE CORNER OF PLATE TOUCHES EDGE OF CHORD.

NOTE: Lateral brace(s) shown shall be 2x4 SPF #2

DIMENSIONS, SUPPORTS AND LOADINGS SPECIFIED BY FABRICATOR TO BE VERIFIED BY BUILDING DESIGNER

BEARINGS

THIS TRUSS DESIGNED FOR CONTINUOUS BEARINGS.

THIS TRUSS REQUIRES RIGID SHEATHING ON EXPOSED FACE.

BEVELED PLATE OR SHIM REQUIRED TO PROVIDE FULL BEARING SURFACE WITH TRUSS CHORD AT JT(S): F

PROVIDE ANCHORAGE AT BEARING JOINT A FOR 150 LBS FACTORED UPLIFT
PROVIDE ANCHORAGE AT BEARING JOINT E FOR 150 LBS FACTORED UPLIFT
BEARING MATERIAL TO BE SPF NO.2 OR BETTER AT JOINT(S)

BRACING
TOP CHORD TO BE SHEATHED OR MAX. PURLIN SPACING = 6.25 FT.
MAX. UNBRACED BOTTOM CHORD LENGTH = 10.00 FT OR RIGID CEILING DIRECTLY APPLIED.

ALL PITCH BREAKS AND PERIMETER CORNER JOINTS MUST BE LATERALLY RESTRAINED.

LOADING
TOTAL LOAD CASES: (4)

CHORDS

MEMB. FR-TO	MAX. FACTORED FORCE (LBS)	FACTORED VERT. LOAD LC1 (PLF) FROM	TO	MAX CSI (LC)	MAX. UNBRAC LENGTH
A- B	0 / 77	-103.4	-103.4	0.09 (1)	10.00
B- H	-101 / 0	-84.9	-84.9	0.07 (1)	6.25
H- C	-79 / 0	-84.9	-84.9	0.07 (1)	6.25
C- J	-79 / 0	-84.9	-84.9	0.07 (1)	6.25
J- D	-101 / 0	-84.9	-84.9	0.07 (1)	6.25
D- E	0 / 77	-103.4	-103.4	0.09 (1)	10.00
B- G	0 / 47	-18.5	-18.5	0.04 (1)	10.00
G- F	0 / 47	-18.5	-18.5	0.05 (1)	10.00
F- I	0 / 47	-18.5	-18.5	0.05 (1)	10.00
I- D	0 / 47	-18.5	-18.5	0.04 (1)	10.00

WEBS

MEMB. FR-TO	MAX. FACTORED FORCE (LBS)	MAX CSI (LC)
F- C	-91 / 0	0.02 (1)
G- H	-94 / 25	0.00 (1)
I- J	-94 / 25	0.00 (1)

DESIGN CRITERIA

SPECIFIED LOADS:

TOP CH.	LL	=	23.3	PSF
	DL	=	6.0	PSF
BOT CH.	LL	=	0.0	PSF
	DL	=	7.4	PSF
TOTAL LOAD		=	36.7	PSF

SPACING = 24.0 IN. C/C

THIS TRUSS IS DESIGNED FOR RESIDENTIAL OR SMALL BUILDING REQUIREMENTS OF PART 9, NBCC 2010, NBCC 2015

THIS DESIGN COMPLIES WITH:
- PART 9 OF BCBC 2018 , OBC 2012 , ABC 2019
- CSA 086-09, CSA 086-14
- TPIC 2011, TPIC 2014

(55 % OF 27.2 P.S.F. G.S.L. PLUS 8.4 P.S.F. RAIN LOAD) EQUALS 23.3 P.S.F. SPECIFIED ROOF LIVE LOAD

CSI: TC=0.09/1.00 (D-E:1) , BC=0.05/1.00 (F-I:1) , WB=0.02/1.00 (C-F:1) , SSI=0.09/1.00 (D-E:1)

DOL LUMBER=1.00 NAIL=1.00 LS BEND=1.10 COMP=1.10 SHEAR=1.10 TENS= 1.10

COMPANION LIVE LOAD FACTOR = 1.00

TRUSS PLATE MANUFACTURER IS NOT RESPONSIBLE FOR QUALITY CONTROL IN THE TRUSS MANUFACTURING PLANT .

NAIL VALUES

PLATE	GRIP(DRY) (PSI) MAX	MIN	SHEAR (PLI) MAX	MIN	SECTION (PLI) MAX	MIN
MT20	618	354	1667	788	1987	1656

PLATE PLACEMENT TOL. = 0.250 inches

PLATE ROTATION TOL. = 5.0 Deg.

JSI GRIP= 0.27 (B) (INPUT = 0.90)
JSI METAL= 0.07 (D) (INPUT = 1.00)

JOB NAME	TRUSS NAME	QUANTITY	PLY	JOB DESC.	DRWG NO.
313989	J01		1	TRUSS DESC. JT-39002	E-19112502

Alpa Roof Truss, Maple

Version 8.300 S Aug 9 2019 MiTek Industries, Inc. Fri Nov 8 11:48:56 2019 Page 1
ID:VRLqmcIDiflZCj2mk6F92VyQuye-7gOi28MkN?OTxaurNpiyEQkTPpgnaTOhpDm55HyLGU5

Scale = 1:33.6

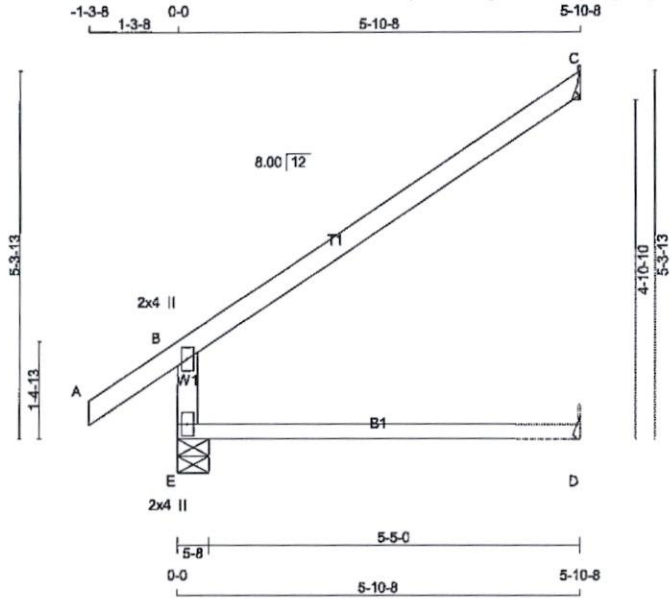

TOTAL WEIGHT = 30 X 16 = 480 lb

[M]

LUMBER
N. L. G. A. RULES

CHORDS	SIZE		LUMBER	DESCR.
E - B	2x4	DRY	No.2	SPF
A - C	2x4	DRY	No.2	SPF
E - D	2x3	DRY	No.2	SPF

DRY: SEASONED LUMBER.

PLATES (table is in inches)

JT	TYPE	PLATES	W	LEN	Y	X
B	TMV+p	MT20	2.0	4.0		
E	BMV1+p	MT20	2.0	4.0		

NOTE: Lateral brace(s) shown shall be 2x4 SPF #2

LICENSED PROFESSIONAL ENGINEER
11/08/2019
R. TURENNE
100157040
PROVINCE OF ONTARIO

DIMENSIONS, SUPPORTS AND LOADINGS SPECIFIED BY FABRICATOR TO BE VERIFIED BY BUILDING DESIGNER

BEARINGS

JT	FACTORED GROSS REACTION VERT	HORZ	MAXIMUM FACTORED GROSS REACTION DOWN	HORZ	UPLIFT	INPUT BRG IN-SX	REQRD BRG IN-SX
E	494	0	494	0	0	5-8	1-8
C	187	0	187	0	0	MECHANICAL	
D	43	0	48	0	0	MECHANICAL	

A SUITABLE HANGER/MECHANICAL CONNECTION IS REQUIRED AT JOINT C, D. MINIMUM BEARING LENGTH AT JOINT C = 1-8, JOINT D = 1-8.

BEVELED PLATE OR SHIM REQUIRED TO PROVIDE FULL BEARING SURFACE WITH TRUSS CHORD AT JT(S): C

UNFACTORED REACTIONS

JT	1ST LCASE COMBINED	MAX./MIN. COMPONENT REACTIONS SNOW	LIVE	PERM.LIVE	WIND	DEAD	SOIL
E	348	235 / 0	0 / 0	0 / 0	0 / 0	113 / 0	0 / 0
C	129	103 / 0	0 / 0	0 / 0	0 / 0	26 / 0	0 / 0
D	34	0 / 0	0 / 0	0 / 0	0 / 0	34 / 0	0 / 0

BEARING MATERIAL TO BE SPF NO.2 OR BETTER AT JOINT(S) E

BRACING
TOP CHORD TO BE SHEATHED OR MAX. PURLIN SPACING = 6.25 FT.
MAX. UNBRACED BOTTOM CHORD LENGTH = 10.00 FT OR RIGID CEILING DIRECTLY APPLIED.

ALL PITCH BREAKS AND PERIMETER CORNER JOINTS MUST BE LATERALLY RESTRAINED.

LOADING
TOTAL LOAD CASES: (4)

CHORDS

MEMB. FR-TO	MAX. FACTORED FORCE (LBS)	FACTORED VERT. LOAD LC1 (PLF) FROM	TO	MAX CSI (LC)	MAX. UNBRAC LENGTH
E- B	-428 / 0	0.0	0.0	0.16 (4)	7.81
A- B	0 / 32	-84.9	-84.9	0.11 (1)	10.00
B- C	-35 / 0	-84.9	-84.9	0.50 (1)	6.25
E- D	0 / 0	-18.5	-18.5	0.30 (4)	10.00

WEBS

MEMB. FR-TO	MAX. FACTORED FORCE (LBS)	MAX CSI (LC)

DESIGN CRITERIA

SPECIFIED LOADS:

TOP CH.	LL	=	23.3	PSF
	DL	=	6.0	PSF
BOT CH.	LL	=	0.0	PSF
	DL	=	7.4	PSF
TOTAL LOAD		=	36.7	PSF

SPACING = 24.0 IN. C/C

THIS TRUSS IS DESIGNED FOR RESIDENTIAL OR SMALL BUILDING REQUIREMENTS OF PART 9, NBCC 2010, NBCC 2015

THIS DESIGN COMPLIES WITH:
- PART 9 OF BCBC 2018 , OBC 2012 , ABC 2019
- CSA 086-09, CSA 086-14
- TPIC 2011, TPIC 2014

DESIGN ASSUMPTIONS
-OVERHANG NOT TO BE ALTERED OR CUT OFF.

(55 % OF 27.2 P.S.F. G.S.L. PLUS 8.4 P.S.F. RAIN LOAD) EQUALS 23.3 P.S.F. SPECIFIED ROOF LIVE LOAD

ALLOWABLE DEFL.(LL)= L/360 (0.20")
CALCULATED VERT. DEFL.(LL) = L/ 999 (0.00")
ALLOWABLE DEFL.(TL)= L/360 (0.20")
CALCULATED VERT. DEFL.(TL) = L/ 932 (0.06")

CSI: TC=0.50/1.00 (B-C:1) , BC=0.30/1.00 (D-E:4) , WB=0.00/1.00 (n/a:0) , SSI=0.20/1.00 (B-C:1)

DOL LUMBER=1.00 NAIL=1.00 LS BEND=1.10 COMP=1.10 SHEAR=1.10 TENS= 1.10

COMPANION LIVE LOAD FACTOR = 1.00

TRUSS PLATE MANUFACTURER IS NOT RESPONSIBLE FOR QUALITY CONTROL IN THE TRUSS MANUFACTURING PLANT .

NAIL VALUES

PLATE	GRIP(DRY) (PSI) MAX	MIN	SHEAR (PLI) MAX	MIN	SECTION (PLI) MAX	MIN
MT20	618	354	1667	788	1987	1656

PLATE PLACEMENT TOL. = 0.250 inches

PLATE ROTATION TOL. = 5.0 Deg.

JSI GRIP= 0.28 (B) (INPUT = 0.90)
JSI METAL= 0.22 (B) (INPUT = 1.00)

JOB NAME	TRUSS NAME	QUANTITY	PLY	JOB DESC.	DRWG NO.
313989	P01		1	TRUSS DESC. JT-39002	E-19112503

Alpa Roof Truss, Maple

Version 8.300 S Aug 9 2019 MiTek Industries, Inc. Fri Nov 8 11:48:58 2019 Page 1
ID:VRLqmclDifiZCj2mk6F92VyQuye-42VTTpO?vdeAAu2DVElQJrprecPD2Nt_HXFC9AyLGU3

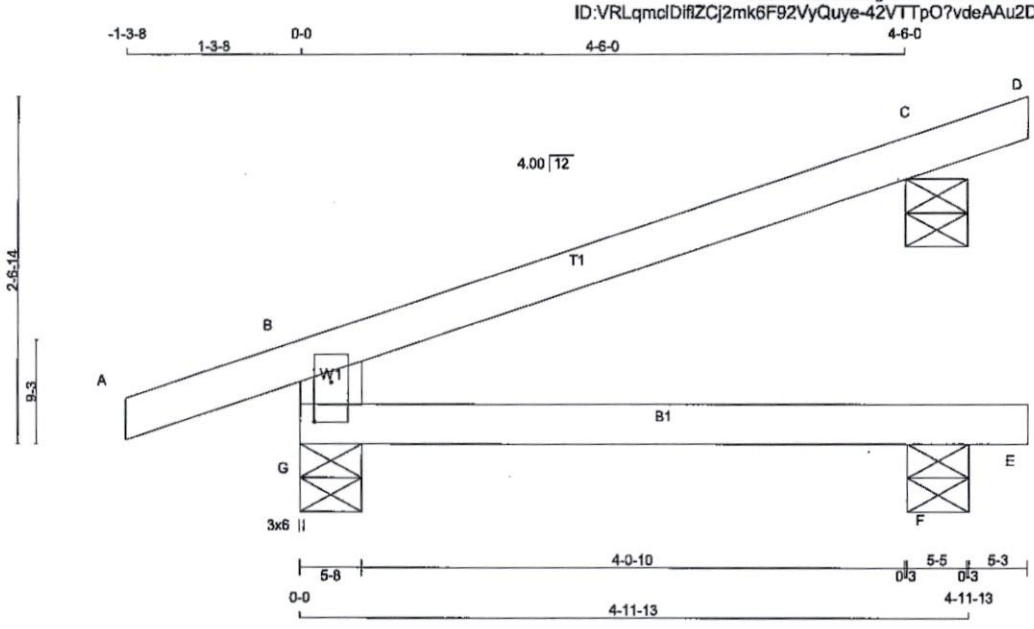

TOTAL WEIGHT = 7 X 15 = 104 lb [M]

LUMBER
N. L. G. A. RULES

CHORDS	SIZE		LUMBER	DESCR.
A - D	2x4	DRY	No.2	SPF
G - B	2x6	DRY	No.2	SPF
G - E	2x4	DRY	No.2	SPF

DRY: SEASONED LUMBER.

PLATES (table is in inches)

JT	TYPE	PLATES	W	LEN	Y	X
B						
G						
G	TMBMV1+p	MT20	3.0	6.0	3.50	1.50

NOTE: Lateral brace(s) shown shall be 2x4 SPF #2

LICENSED PROFESSIONAL ENGINEER
11/08/2019
R. TURENNE
100157040
PROVINCE OF ONTARIO

DIMENSIONS, SUPPORTS AND LOADINGS SPECIFIED BY FABRICATOR TO BE VERIFIED BY BUILDING DESIGNER

BEARINGS

JT	FACTORED GROSS REACTION VERT	HORZ	MAXIMUM FACTORED GROSS REACTION DOWN	HORZ	UPLIFT	INPUT BRG IN-SX	REQRD BRG IN-SX
G	419	0	419	0	0	5-8	1-8
F	46	0	52	0	0	5-8	1-8
C	212	0	212	0	0	5-8	5-8

BEVELED PLATE OR SHIM REQUIRED TO PROVIDE FULL BEARING SURFACE WITH TRUSS CHORD AT JT(S): C

UNFACTORED REACTIONS

JT	1ST LCASE COMBINED	MAX./MIN. COMPONENT REACTIONS SNOW	LIVE	PERM.LIVE	WIND	DEAD	SOIL
G	295	200 / 0	0 / 0	0 / 0	0 / 0	95 / 0	0 / 0
F	37	0 / 0	0 / 0	0 / 0	0 / 0	37 / 0	0 / 0
C	147	117 / 0	0 / 0	0 / 0	0 / 0	30 / 0	0 / 0

BEARING MATERIAL TO BE SPF NO.2 OR BETTER AT JOINT(S) G, F, C

BRACING
TOP CHORD TO BE SHEATHED OR MAX. PURLIN SPACING = 6.25 FT.
MAX. UNBRACED BOTTOM CHORD LENGTH = 10.00 FT OR RIGID CEILING DIRECTLY APPLIED.

ALL PITCH BREAKS AND PERIMETER CORNER JOINTS MUST BE LATERALLY RESTRAINED.

LOADING
TOTAL LOAD CASES: (4)

CHORDS

MEMB. FR-TO	MAX. FACTORED FORCE (LBS)	FACTORED VERT. LOAD (PLF) FROM	TO	LC1 MAX CSI (LC)	MAX. UNBRAC LENGTH
A- B	0 / 18	-84.9	-84.9	0.11 (1)	10.00
B- C	-16 / 0	-84.9	-84.9	0.32 (1)	6.25
C- D	-10 / 0	-84.9	-84.9	0.03 (1)	10.00
G- B	-365 / 0	0.0	0.0	0.06 (4)	7.81
G- F	0 / 0	-18.5	-18.5	0.11 (4)	10.00
F- E	0 / 0	-18.5	-18.5	0.01 (4)	10.00

WEBS

MEMB. FR-TO	MAX. FACTORED FORCE (LBS)	MAX CSI (LC)

DESIGN CRITERIA

SPECIFIED LOADS:

TOP CH.	LL	=	23.3	PSF
	DL	=	6.0	PSF
BOT CH.	LL	=	0.0	PSF
	DL	=	7.4	PSF
TOTAL LOAD		=	36.7	PSF

SPACING = 24.0 IN. C/C

THIS TRUSS IS DESIGNED FOR RESIDENTIAL OR SMALL BUILDING REQUIREMENTS OF PART 9, NBCC 2010, NBCC 2015

THIS DESIGN COMPLIES WITH:
- PART 9 OF BCBC 2018 , OBC 2012 , ABC 2019
- CSA 086-09, CSA 086-14
- TPIC 2011, TPIC 2014

DESIGN ASSUMPTIONS
-OVERHANG NOT TO BE ALTERED OR CUT OFF.

(55 % OF 27.2 P.S.F. G.S.L. PLUS 8.4 P.S.F. RAIN LOAD) EQUALS 23.3 P.S.F. SPECIFIED ROOF LIVE LOAD

ALLOWABLE DEFL.(LL)= L/360 (0.19")
CALCULATED VERT. DEFL.(LL) = L/ 999 (0.00")
ALLOWABLE DEFL.(TL)= L/360 (0.19")
CALCULATED VERT. DEFL.(TL) = L/ 999 (0.01")

CANTILEVER DEFLECTION:
ALLOWABLE DEFL.(TL)= L/120 (0.19")
CALCULATED VERT. DEFL.(TL) = L/ 999 (0.00")

CSI: TC=0.32/1.00 (B-C:1) , BC=0.11/1.00 (F-G:4) , WB=0.00/1.00 (n/a:0) , SSI=0.19/1.00 (B-C:1)

DOL LUMBER=1.00 NAIL=1.00 LS BEND=1.10 COMP=1.10 SHEAR=1.10 TENS= 1.10

COMPANION LIVE LOAD FACTOR = 1.00

AUTOSOLVE RIGHT HEEL ONLY

TRUSS PLATE MANUFACTURER IS NOT RESPONSIBLE FOR QUALITY CONTROL IN THE TRUSS MANUFACTURING PLANT .

NAIL VALUES

PLATE	GRIP(DRY) (PSI) MAX	MIN	SHEAR (PLI) MAX	MIN	SECTION (PLI) MAX	MIN
MT20	618	354	1667	788	1987	1656

PLATE PLACEMENT TOL. = 0.250 inches

PLATE ROTATION TOL. = 5.0 Deg.

JSI GRIP= 0.21 (G) (INPUT = 0.90)
JSI METAL= 0.07 (G) (INPUT = 1.00)

JOB NAME	TRUSS NAME	QUANTITY	PLY	JOB DESC.	DRWG NO.
314233	H01T		1	TRUSS DESC. JT-39002	E-19112504

Alpa Roof Truss, Maple

Version 8.300 S Aug 9 2019 MiTek Industries, Inc. Fri Nov 8 12:17:36 2019 Page 1

ID:VRLqmcIDifiZCj2mk6F92VyQuye-mZJx1GAeJT5PHvOP82ZIx7zJ88YOa8bsKqQ5SbyLG3D

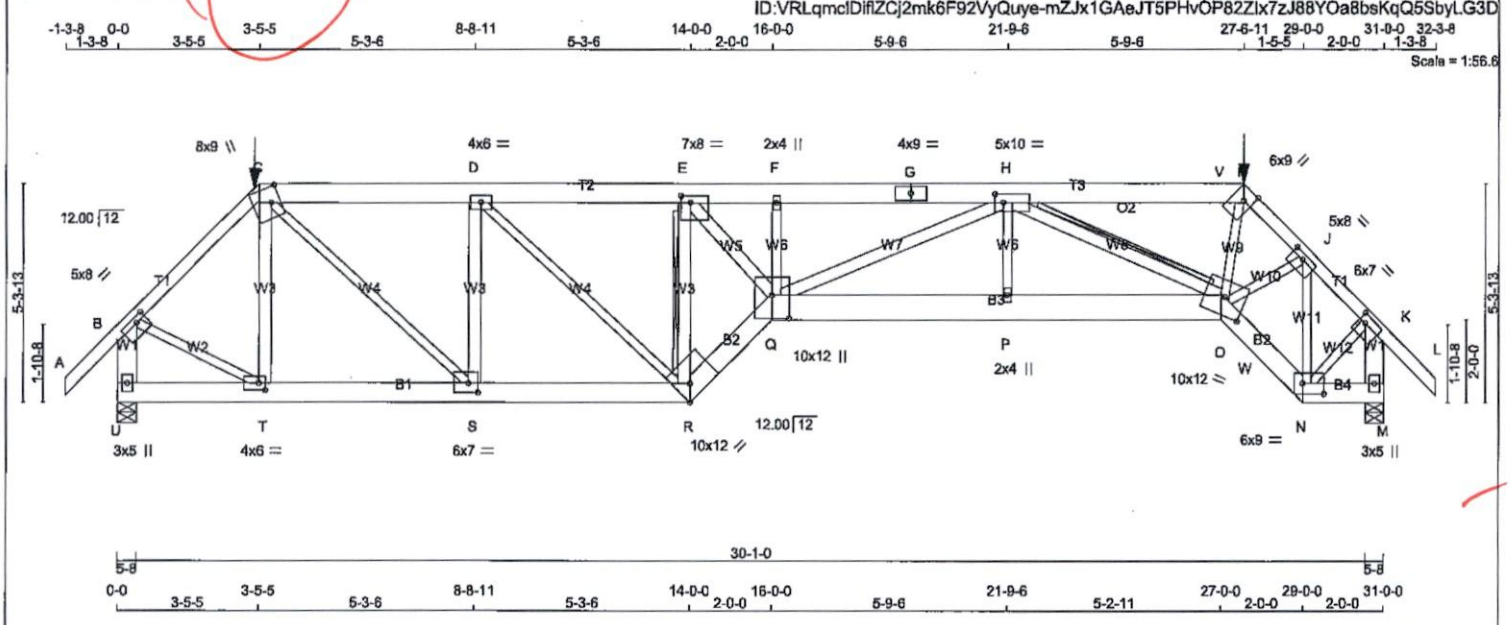

TOTAL WEIGHT = 187 lb

[M]

LUMBER

N. L. G. A. RULES

CHORDS	SIZE		LUMBER	DESCR.
A - C	2x4	DRY	No.2	SPF
C - G	2x6	DRY	No.2	SPF
G - I	2x6	DRY	No.2	SPF
I - L	2x4	DRY	No.2	SPF
U - B	2x6	DRY	No.2	SPF
M - K	2x6	DRY	No.2	SPF
U - R	2x6	DRY	No.2	SPF
R - Q	2x6	DRY	No.2	SPF
Q - O	2x8	DRY	1950F 1.7E	SPF
O - N	2x6	DRY	No.2	SPF
N - M	2x6	DRY	No.2	SPF
ALL WEBS EXCEPT	2x3	DRY	No.2	SPF
T - C	2x4	DRY	No.2	SPF
S - D	2x4	DRY	No.2	SPF
R - E	2x4	DRY	No.2	SPF
E - Q	2x4	DRY	1650F 1.5E	SPF
Q - H	2x4	DRY	No.2	SPF
H - O	2x4	DRY	No.2	SPF

DRY: SEASONED LUMBER.

PLATES (table is in inches)

JT	TYPE	PLATES	W	LEN	Y	X
B	TMVW-t	MT20	5.0	8.0	1.50	3.00
C	TTWW+m	MT20	8.0	9.0	4.50	2.75
D	TMWW-t	MT20	4.0	6.0		
E	TMWW-t	MT20	7.0	8.0	2.00	2.75
F	TMW+w	MT20	2.0	4.0		
G	TS-t	MT20	4.0	9.0		
H	TMWWW-t	MT20	5.0	10.0	2.50	2.50
I	TTW+h	MT20	6.0	9.0	Edge	2.50
J	TMWW-t	MT20	5.0	8.0	1.50	3.75
K	TMVW-t	MT20	6.0	7.0	2.25	2.00
M	BMV1+p	MT20	3.0	5.0		
N	BBWW-l	MT20	6.0	9.0	3.00	6.50
O	BBWWW-m	MT20	10.0	12.0	5.25	6.00
P	BMW+w	MT20	2.0	4.0		
Q	BBWWW+p	MT20	10.0	12.0	6.75	5.00
R	BBWW-h	MT20	10.0	12.0	Edge	4.00
S	BMWW-t	MT20	6.0	7.0	2.75	2.75

NOTE: Lateral brace(s) shown shall be 2x4 SPF #2

LICENSED PROFESSIONAL ENGINEER
11/08/2019
R. TURENNE
100157040
PROVINCE OF ONTARIO

DIMENSIONS, SUPPORTS AND LOADINGS SPECIFIED BY FABRICATOR TO BE VERIFIED BY BUILDING DESIGNER

BEARINGS

JT	FACTORED GROSS REACTION VERT	HORZ	MAXIMUM FACTORED GROSS REACTION DOWN	HORZ	UPLIFT	INPUT BRG IN-SX	REQRD BRG IN-SX
U	3204	0	3204	0	0	5-8	4-15
M	3210	0	3210	0	0	5-8	4-15

ALLOW FOR 0.3" OF HORIZONTAL MOVEMENT DUE TO TOTAL LOAD

UNFACTORED REACTIONS

JT	1ST LCASE COMBINED	MAX./MIN. COMPONENT REACTIONS SNOW	LIVE	PERM.LIVE	WIND	DEAD	SOIL
U	2273	1449 / 0	0 / 0	0 / 0	0 / 0	825 / 0	0 / 0
M	2277	1452 / 0	0 / 0	0 / 0	0 / 0	826 / 0	0 / 0

BEARING MATERIAL TO BE SPF NO.2 OR BETTER AT JOINT(S) U, M

BRACING

TOP CHORD TO BE SHEATHED OR MAX. PURLIN SPACING = 2.29 FT.
MAX. UNBRACED BOTTOM CHORD LENGTH = 10.00 FT OR RIGID CEILING DIRECTLY APPLIED.

ALL PITCH BREAKS AND PERIMETER CORNER JOINTS MUST BE LATERALLY RESTRAINED.

2x4 DRY SPF No.2 T-BRACE AT E-R, H-O

FASTEN T AND I-BRACES TO NARROW EDGE OF WEB WITH ONE ROW PER PLY OF 3" COMMON WIRE NAILS @ 6" O.C. WITH 3" MINIMUM END DISTANCE. BRACE MUST COVER 90% OF WEB LENGTH.

END VERTICAL(S) MUST BE SHEATHED OR HAVE BRACES AS INDICATED IN THE MAX. UNBRACED LENGTH COLUMN OF THE TABLE BELOW

LOADING

TOTAL LOAD CASES: (4)

CHORDS

MEMB. FR-TO	MAX. FACTORED FORCE (LBS)	FACTORED VERT. LOAD LC1 (PLF) FROM	TO	MAX CSI (LC)	MAX. UNBRAC LENGTH
A- B	0 / 42	-84.9	-84.9	0.13 (1)	10.00
B- C	-2930 / 0	-84.9	-84.9	0.35 (1)	3.75
C- D	-4226 / 0	-167.1	-167.1	0.50 (1)	3.69
D- E	-5120 / 0	-167.1	-167.1	0.56 (1)	3.31
E- F	-8834 / 0	-167.1	-167.1	0.63 (1)	2.48
F- G	-8843 / 0	-84.9	-84.9	0.83 (1)	2.29
G- H	-8843 / 0	-84.9	-84.9	0.83 (1)	2.29
H- V	-3974 / 0	-84.9	-84.9	0.31 (1)	4.05
V- I	-3974 / 0	-167.1	-167.1	0.31 (1)	4.05
I- J	-4772 / 0	-84.9	-84.9	0.39 (1)	2.87
J- K	-2470 / 0	-84.9	-84.9	0.21 (1)	4.16
K- L	0 / 42	-84.9	-84.9	0.13 (1)	10.00
U- B	-3166 / 0	0.0	0.0	0.24 (1)	5.90
M- K	-3173 / 0	0.0	0.0	0.25 (1)	5.89
U- T	0 / 0	-36.4	-36.4	0.09 (4)	10.00
T- S	0 / 2057	-36.4	-36.4	0.34 (1)	10.00
S- R	0 / 4226	-36.4	-36.4	0.63 (1)	10.00
R- Q	0 / 7061	-36.4	-36.4	0.93 (1)	10.00
Q- P	0 / 7529	-118.6	-118.6	0.46 (1)	10.00
P- O	0 / 7529	-118.6	-118.6	0.44 (1)	10.00
O- W	0 / 2311	-36.4	-36.4	0.31 (1)	10.00
W- N	0 / 2311	-36.4	-36.4	0.31 (1)	10.00
N- M	0 / 0	-36.4	-36.4	0.02 (4)	10.00

WEBS

MEMB. FR-TO	MAX. FACTORED FORCE (LBS)	MAX CSI (LC)
T- C	-632 / 0	0.17 (1)
C- S	0 / 2952	0.73 (1)
S- D	-1861 / 0	0.50 (1)
D- R	0 / 1209	0.30 (1)
R- E	-5688 / 0	0.93 (1)
E- Q	0 / 6354	0.81 (1)
Q- F	-237 / 0	0.04 (1)
Q- H	0 / 1457	0.26 (1)
P- H	0 / 644	0.16 (1)
H- O	-4026 / 0	0.89 (1)
O- I	0 / 2881	0.71 (1)
O- J	0 / 2082	0.52 (1)
N- J	-2766 / 0	0.82 (1)
B- T	0 / 2236	0.55 (1)
N- K	0 / 2080	0.51 (1)

FACTORED CONCENTRATED LOADS (LBS)

JT	LOC.	LC1	MAX-	MAX+	FACE	DIR.	TYPE	HEEL	CONN.
C	3-5-5	-213	-213	—	FRONT	VERT	TOTAL	—	C1
I	27-6-11	-213	-213	—	FRONT	VERT	TOTAL	—	C1

DESIGN CRITERIA

SPECIFIED LOADS:

TOP CH.	LL	=	23.3	PSF
	DL	=	6.0	PSF
BOT CH.	LL	=	0.0	PSF
	DL	=	7.4	PSF
TOTAL LOAD		=	36.7	PSF

SPACING = 24.0 IN. C/C

LOADING IN FLAT SECTION BASED ON A SLOPE OF 2.00/12 MINIMUM

GIRDER TYPE: CPrimeHip
SIDE SETBACK = 3-5-5
END SETBACK = 5-10-8
END WALL WIDTH = 0-0
CORNER FRAMING TYPE: CONVENTIONAL
END JACK TYPE: CONVENTIONAL
APPLIED TO FRONT SIDE
- ADDT'L LOADS BASED ON 55 % OF GSL.
LOADS APPLIED TO FIRST 16-0-0 OF SPAN MEASURED FROM THE LEFT.

GIRDER TYPE: CStdGirder
START DISTANCE = 16-0-0
START SPAN CARRIED = 5-10-8
END DISTANCE = 27-0-0
END SPAN CARRIED = 5-10-8
END WALL WIDTH = 0-0
APPLIED TO FRONT SIDE OF BOTTOM CHORD.
- ADDT'L LOADS BASED ON 55 % OF GSL.

GIRDER TYPE: CPrimeHip
SIDE SETBACK = 3-5-5
END SETBACK = 5-10-8
END WALL WIDTH = 0-0
CORNER FRAMING TYPE: CONVENTIONAL
END JACK TYPE: CONVENTIONAL
APPLIED TO FRONT SIDE
- ADDT'L LOADS BASED ON 55 % OF GSL.
LOADS APPLIED TO FIRST 4-0-0 OF SPAN MEASURED FROM THE RIGHT.

THIS TRUSS IS DESIGNED FOR RESIDENTIAL OR SMALL BUILDING REQUIREMENTS OF PART 9, NBCC 2010, NBCC 2015

THIS DESIGN COMPLIES WITH:
- PART 9 OF BCBC 2018 , OBC 2012 , ABC 2019
- CSA 086-09, CSA 086-14
- TPIC 2011, TPIC 2014

DESIGN ASSUMPTIONS
-OVERHANG NOT TO BE ALTERED OR CUT OFF.

(55 % OF 27.2 P.S.F. G.S.L. PLUS 8.4 P.S.F. RAIN LOAD) EQUALS 23.3 P.S.F. SPECIFIED ROOF LIVE LOAD

ALLOWABLE DEFL.(LL)= L/360 (1.03")
CALCULATED VERT. DEFL.(LL) = L/ 999 (0.36")
ALLOWABLE DEFL.(TL)= L/360 (1.03")
CALCULATED VERT. DEFL.(TL) = L/ 538 (0.69")

CONTINUED ON PAGE 2

JOB NAME	TRUSS NAME	QUANTITY	PLY	JOB DESC.		DRWG NO.
314233	H01T		1	TRUSS DESC.	JT-39002	E-19112504(2)

PLATES (table is in inches)

JT	TYPE	PLATES	W	LEN	Y	X
T	BMWW-t	MT20	4.0	6.0	2.00	1.75
U	BMV1+p	MT20	3.0	5.0		

Edge - INDICATES REFERENCE CORNER OF PLATE TOUCHES EDGE OF CHORD.

CSI: TC=0.83/1.00 (F-H:1) , BC=0.93/1.00 (Q-R:1) , WB=0.93/1.00 (E-R:1) , SSI=0.35/1.00 (C-D:1)

DOL LUMBER=1.00 NAIL=1.00 LS BEND=1.00 COMP=1.00 SHEAR=1.00 TENS= 1.00

COMPANION LIVE LOAD FACTOR = 1.00

AUTOSOLVE HEELS OFF

TRUSS PLATE MANUFACTURER IS NOT RESPONSIBLE FOR QUALITY CONTROL IN THE TRUSS MANUFACTURING PLANT .

NAIL VALUES

PLATE	GRIP(DRY) (PSI)		SHEAR (PLI)		SECTION (PLI)	
	MAX	MIN	MAX	MIN	MAX	MIN
MT20	618	354	1667	788	1987	1656

PLATE PLACEMENT TOL. = 0.250 inches

PLATE ROTATION TOL. = 5.0 Deg.

JSI GRIP= 0.89 (T) (INPUT = 0.90)
JSI METAL= 0.80 (I) (INPUT = 1.00)

NOTE: Lateral brace(s) shown shall be 2x4 SPF #2

LICENSED PROFESSIONAL ENGINEER
11/08/2019
R. TURENNE
100157040
PROVINCE OF ONTARIO

JOB NAME	TRUSS NAME	QUANTITY	PLY	JOB DESC.	DRWG NO.
314233	H02T		1	TRUSS DESC. JT-39002	E-19112505

Alpa Roof Truss, Maple

Version 8.300 S Aug 9 2019 MiTek Industries, Inc. Fri Nov 8 12:10:43 2019 Page 1

ID:VRLqmcIDiflZCj2mk6F92VyQuye-M6spM2Baaa30ERJ1SpfSi1MqZgikJR64M3tlS1yLG9g

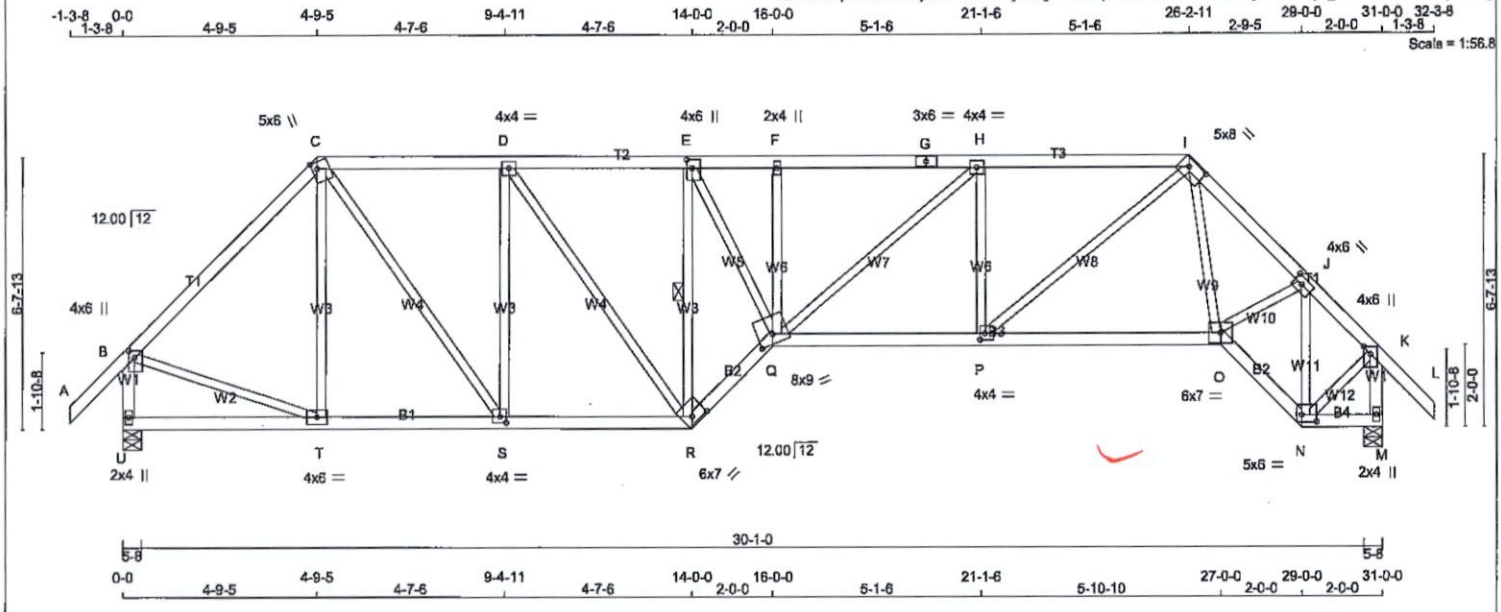

TOTAL WEIGHT = 147 lb

[M]

LUMBER

N. L. G. A. RULES

CHORDS	SIZE		LUMBER	DESCR.
A - C	2x4	DRY	No.2	SPF
C - G	2x4	DRY	No.2	SPF
G - I	2x4	DRY	No.2	SPF
I - L	2x4	DRY	No.2	SPF
U - B	2x4	DRY	No.2	SPF
M - K	2x4	DRY	No.2	SPF
U - R	2x4	DRY	No.2	SPF
R - Q	2x4	DRY	No.2	SPF
Q - O	2x4	DRY	No.2	SPF
O - N	2x4	DRY	No.2	SPF
N - M	2x4	DRY	No.2	SPF
ALL WEBS EXCEPT	2x3	DRY	No.2	SPF

DRY: SEASONED LUMBER.

PLATES (table is in inches)

JT	TYPE	PLATES	W	LEN	Y	X
B	TMVW+p	MT20	4.0	6.0	2.00	1.75
C	TTWW+m	MT20	5.0	6.0	2.00	1.50
D	TMWW-t	MT20	4.0	4.0		
E	TMWW+t	MT20	4.0	6.0	2.50	1.50
F	TMW+w	MT20	2.0	4.0		
G	TS-t	MT20	3.0	6.0		
H	TMWW-t	MT20	4.0	4.0		
I	TTWW-h	MT20	5.0	8.0	2.00	5.25
J	TMWW-t	MT20	4.0	6.0	2.00	2.50
K	TMVW+p	MT20	4.0	6.0	2.25	2.00
M	BMV1+p	MT20	2.0	4.0		
N	BBWW-t	MT20	5.0	6.0	2.00	4.50
O	BBWW-t	MT20	6.0	7.0		
P	BMWW-t	MT20	4.0	4.0	1.75	1.50
Q	BBWWW-m	MT20	8.0	9.0	2.75	4.50
R	BBWW-h	MT20	6.0	7.0	2.00	4.25
S	BMWW-t	MT20	4.0	4.0	1.75	1.75
T	BMWW-t	MT20	4.0	6.0		
U	BMV1+p	MT20	2.0	4.0		

NOTE: Lateral brace(s) shown shall be 2x4 SPF #2

LICENSED PROFESSIONAL ENGINEER
11/08/2019
R. TURENNE
100157040
PROVINCE OF ONTARIO

DIMENSIONS, SUPPORTS AND LOADINGS SPECIFIED BY FABRICATOR TO BE VERIFIED BY BUILDING DESIGNER

BEARINGS

JT	FACTORED GROSS REACTION VERT	HORZ	MAXIMUM FACTORED GROSS REACTION DOWN	HORZ	UPLIFT	INPUT BRG IN-SX	REQRD BRG IN-SX
U	1718	0	1718	0	0	5-8	2-9
M	1723	0	1723	0	0	5-8	2-9

UNFACTORED REACTIONS

JT	1ST LCASE COMBINED	MAX./MIN. COMPONENT REACTIONS SNOW	LIVE	PERM.LIVE	WIND	DEAD	SOIL
U	1217	785 / 0	0 / 0	0 / 0	0 / 0	432 / 0	0 / 0
M	1221	788 / 0	0 / 0	0 / 0	0 / 0	433 / 0	0 / 0

BEARING MATERIAL TO BE SPF NO.2 OR BETTER AT JOINT(S) U, M

BRACING

TOP CHORD TO BE SHEATHED OR MAX. PURLIN SPACING = 3.65 FT.
MAX. UNBRACED BOTTOM CHORD LENGTH = 10.00 FT OR RIGID CEILING DIRECTLY APPLIED.

ALL PITCH BREAKS AND PERIMETER CORNER JOINTS MUST BE LATERALLY RESTRAINED.

1 LATERAL BRACE(S) AT 1/ 2 LENGTH OF E-R.

END VERTICAL(S) MUST BE SHEATHED OR HAVE BRACES AS INDICATED IN THE MAX. UNBRACED LENGTH COLUMN OF THE TABLE BELOW

LOADING

TOTAL LOAD CASES: (4)

CHORDS

MEMB. FR-TO	MAX. FACTORED FORCE (LBS)	FACTORED VERT. LOAD LC1 (PLF) FROM	TO	MAX CSI (LC)	MAX. UNBRAC LENGTH
A- B	0 / 42	-84.9	-84.9	0.12 (1)	10.00
B- C	-1464 / 0	-84.9	-84.9	0.42 (1)	4.94
C- D	-1681 / 0	-84.9	-84.9	0.33 (1)	4.75
D- E	-1950 / 0	-84.9	-84.9	0.35 (1)	4.46
E- F	-2868 / 0	-84.9	-84.9	0.19 (1)	3.97
F- G	-2875 / 0	-84.9	-84.9	0.50 (1)	3.65
G- H	-2875 / 0	-84.9	-84.9	0.50 (1)	3.65
H- I	-2529 / 0	-84.9	-84.9	0.47 (1)	3.89
I- J	-2208 / 0	-84.9	-84.9	0.17 (1)	4.46
J- K	-1216 / 0	-84.9	-84.9	0.13 (1)	5.66
K- L	0 / 42	-84.9	-84.9	0.12 (1)	10.00
U- B	-1681 / 0	0.0	0.0	0.19 (1)	6.40
M- K	-1705 / 0	0.0	0.0	0.19 (1)	6.37
U- T	0 / 0	-18.5	-18.5	0.10 (4)	10.00
T- S	0 / 1028	-18.5	-18.5	0.22 (1)	10.00
S- R	0 / 1681	-18.5	-18.5	0.32 (1)	10.00
R- Q	0 / 2706	-18.5	-18.5	0.45 (1)	10.00
Q- P	0 / 2529	-18.5	-18.5	0.48 (1)	10.00
P- O	0 / 1481	-18.5	-18.5	0.32 (1)	10.00
O- N	0 / 1133	-18.5	-18.5	0.19 (1)	10.00
N- M	0 / 0	-18.5	-18.5	0.02 (4)	10.00

WEBS

MEMB. FR-TO	MAX. FACTORED FORCE (LBS)	MAX CSI (LC)
T- C	-224 / 0	0.16 (1)
C- S	0 / 1109	0.25 (1)
S- D	-819 / 0	0.60 (1)
D- R	0 / 457	0.10 (1)
R- E	-2217 / 0	0.63 (1)
E- Q	0 / 2184	0.49 (1)
Q- F	-273 / 0	0.09 (1)
Q- H	0 / 453	0.10 (1)
P- H	-787 / 0	0.25 (1)
P- I	0 / 1373	0.31 (1)
I- O	0 / 384	0.09 (1)
O- J	0 / 897	0.20 (1)
N- J	-1394 / 0	0.31 (1)
B- T	0 / 1081	0.24 (1)
N- K	0 / 1053	0.24 (1)

DESIGN CRITERIA

SPECIFIED LOADS:

TOP CH.	LL =	23.3	PSF
	DL =	6.0	PSF
BOT CH.	LL =	0.0	PSF
	DL =	7.4	PSF
TOTAL LOAD	=	36.7	PSF

SPACING = 24.0 IN. C/C

LOADING IN FLAT SECTION BASED ON A SLOPE OF 2.00/12 MINIMUM

THIS TRUSS IS DESIGNED FOR RESIDENTIAL OR SMALL BUILDING REQUIREMENTS OF PART 9, NBCC 2010, NBCC 2015

THIS DESIGN COMPLIES WITH:
- PART 9 OF BCBC 2018 , OBC 2012 , ABC 2019
- CSA 086-09, CSA 086-14
- TPIC 2011, TPIC 2014

DESIGN ASSUMPTIONS
-OVERHANG NOT TO BE ALTERED OR CUT OFF.

(55 % OF 27.2 P.S.F. G.S.L. PLUS 8.4 P.S.F. RAIN LOAD) EQUALS 23.3 P.S.F. SPECIFIED ROOF LIVE LOAD

ALLOWABLE DEFL.(LL)= L/360 (1.03")
CALCULATED VERT. DEFL.(LL) = L/ 999 (0.16")
ALLOWABLE DEFL.(TL)= L/360 (1.03")
CALCULATED VERT. DEFL.(TL) = L/ 999 (0.31")

CSI: TC=0.50/1.00 (F-H:1) , BC=0.48/1.00 (P-Q:1) , WB=0.63/1.00 (E-R:1) , SSI=0.21/1.00 (H-I:1)

DOL LUMBER=1.00 NAIL=1.00 LS BEND=1.10 COMP=1.10 SHEAR=1.10 TENS= 1.10

COMPANION LIVE LOAD FACTOR = 1.00

TRUSS PLATE MANUFACTURER IS NOT RESPONSIBLE FOR QUALITY CONTROL IN THE TRUSS MANUFACTURING PLANT .

NAIL VALUES

PLATE	GRIP(DRY) (PSI) MAX	MIN	SHEAR (PLI) MAX	MIN	SECTION (PLI) MAX	MIN
MT20	618	354	1667	788	1987	1656

PLATE PLACEMENT TOL. = 0.250 inches

PLATE ROTATION TOL. = 5.0 Deg.

JSI GRIP= 0.90 (P) (INPUT = 0.90)
JSI METAL= 0.58 (B) (INPUT = 1.00)

JOB NAME	TRUSS NAME	QUANTITY	PLY	JOB DESC.	DRWG NO.
314233	H03T		1	TRUSS DESC. JT-39002	E-19112506

Alpa Roof Truss, Maple

Version 8.300 S Aug 9 2019 MiTek Industries, Inc. Fri Nov 8 12:11:02 2019 Page 1

ID:VRLqmcIDiflZCj2mk6F92VyQuye-JmV?LYPU5QSJ0MGh3IVvz2f4DKBGGzYtkWzFdQyLG9N

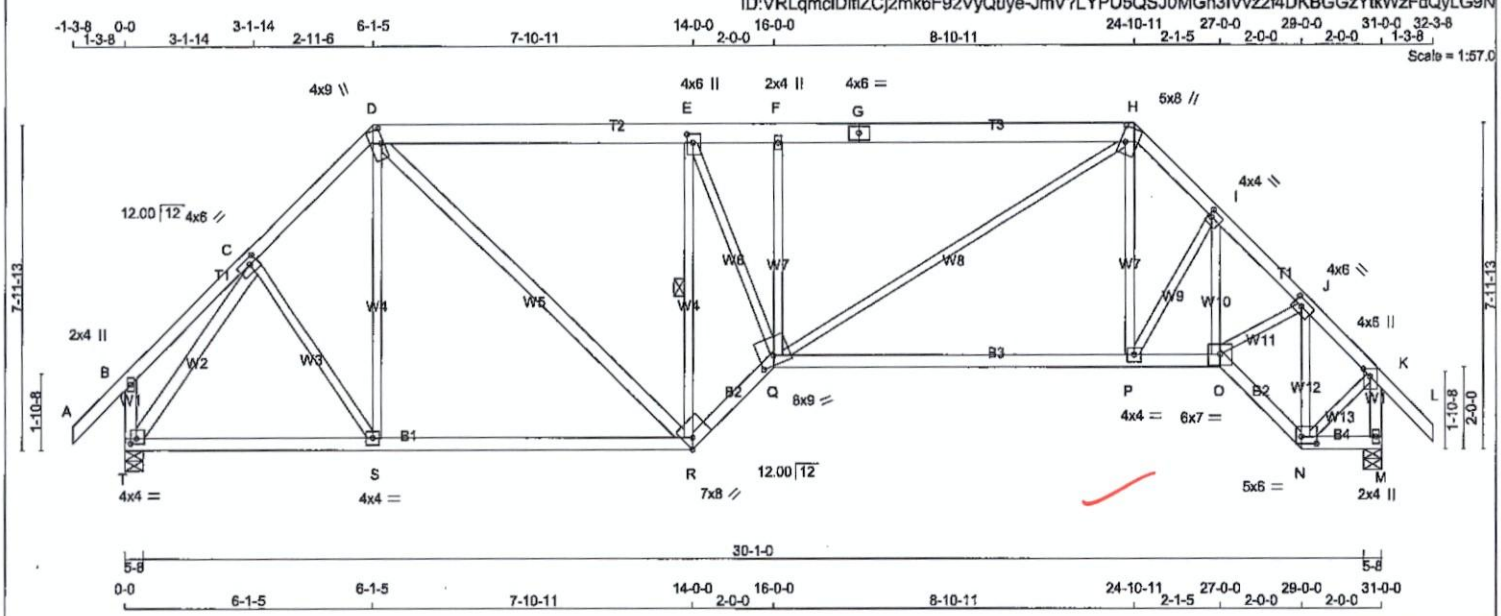

TOTAL WEIGHT = 166 lb

[M]

LUMBER

N. L. G. A. RULES

CHORDS	SIZE		LUMBER	DESCR.
A - D	2x4	DRY	No.2	SPF
D - G	2x6	DRY	No.2	SPF
G - H	2x6	DRY	No.2	SPF
H - L	2x4	DRY	No.2	SPF
T - B	2x4	DRY	No.2	SPF
M - K	2x4	DRY	No.2	SPF
T - R	2x4	DRY	No.2	SPF
R - Q	2x4	DRY	No.2	SPF
Q - O	2x4	DRY	No.2	SPF
O - N	2x4	DRY	No.2	SPF
N - M	2x4	DRY	No.2	SPF
ALL WEBS	2x3	DRY	No.2	SPF
EXCEPT				
D - R	2x4	DRY	No.2	SPF
T - C	2x4	DRY	No.2	SPF

DRY: SEASONED LUMBER.

PLATES (table is in inches)

JT	TYPE	PLATES	W	LEN	Y	X
B	TMV+p	MT20	2.0	4.0		
C	TMWW-t	MT20	4.0	6.0	1.75	2.25
D	TTWW+m	MT20	4.0	9.0	4.50	0.75
E	TMWW+t	MT20	4.0	6.0	2.50	1.75
F	TMW+w	MT20	2.0	4.0		
G	TS-t	MT20	4.0	6.0		
H	TTWW+m	MT20	5.0	8.0	4.50	1.50
I	TMWW-t	MT20	4.0	4.0	2.00	1.00
J	TMWW-t	MT20	4.0	6.0	2.00	2.50
K	TMVW+p	MT20	4.0	6.0	2.25	2.00
M	BMV1+p	MT20	2.0	4.0		
N	BBWW-l	MT20	5.0	6.0	2.00	4.50
O	BBWW-l	MT20	6.0	7.0		
P	BMWW-t	MT20	4.0	4.0		
Q	BBWWW-m	MT20	8.0	9.0	2.75	4.25
R	BBWW-h	MT20	7.0	8.0	Edge	2.50
S	BMWW-t	MT20	4.0	4.0		
T	BMVW1-t	MT20	4.0	4.0	1.50	1.75

Edge - INDICATES REFERENCE CORNER OF PLATE TOUCHES EDGE OF CHORD.

NOTE: Lateral brace(s) shown shall be 2x4 SPF #2

LICENSED PROFESSIONAL ENGINEER
11/08/2019
R. TURENNE
100157040
PROVINCE OF ONTARIO

DIMENSIONS, SUPPORTS AND LOADINGS SPECIFIED BY FABRICATOR TO BE VERIFIED BY BUILDING DESIGNER

BEARINGS

JT	FACTORED GROSS REACTION VERT	HORZ	MAXIMUM FACTORED GROSS REACTION DOWN	HORZ	UPLIFT	INPUT BRG IN-SX	REQRD BRG IN-SX
M	1723	0	1723	0	0	5-8	2-9
T	1718	0	1718	0	0	5-8	1-14

UNFACTORED REACTIONS

MAX./MIN. COMPONENT REACTIONS

JT	1ST LCASE COMBINED	SNOW	LIVE	PERM.LIVE	WIND	DEAD	SOIL
M	1221	788 / 0	0 / 0	0 / 0	0 / 0	433 / 0	0 / 0
T	1217	785 / 0	0 / 0	0 / 0	0 / 0	432 / 0	0 / 0

BEARING MATERIAL TO BE SPF NO.2 OR BETTER AT JOINT(S) M, T

BRACING

TOP CHORD TO BE SHEATHED OR MAX. PURLIN SPACING = 4.49 FT.
MAX. UNBRACED BOTTOM CHORD LENGTH = 10.00 FT OR RIGID CEILING DIRECTLY APPLIED.

ALL PITCH BREAKS AND PERIMETER CORNER JOINTS MUST BE LATERALLY RESTRAINED.

1 LATERAL BRACE(S) AT 1/ 2 LENGTH OF E-R.

END VERTICAL(S) MUST BE SHEATHED OR HAVE BRACES AS INDICATED IN THE MAX. UNBRACED LENGTH COLUMN OF THE TABLE BELOW

LOADING

TOTAL LOAD CASES: (4)

CHORDS

MEMB. FR-TO	MAX. FACTORED FORCE (LBS)	FACTORED VERT. LOAD LC1 (PLF) FROM	TO	MAX CSI (LC)	MAX. UNBRAC LENGTH
A- B	0 / 42	-84.9	-84.9	0.12 (1)	10.00
B- C	0 / 20	-84.9	-84.9	0.12 (1)	10.00
C- D	-1493 / 0	-84.9	-84.9	0.15 (1)	5.22
D- E	-1681 / 0	-84.9	-84.9	0.33 (1)	5.69
E- F	-2304 / 0	-84.9	-84.9	0.37 (1)	4.97
F- G	-2314 / 0	-84.9	-84.9	0.47 (1)	4.86
G- H	-2314 / 0	-84.9	-84.9	0.47 (1)	4.86
H- I	-1991 / 0	-84.9	-84.9	0.09 (1)	4.73
I- J	-2225 / 0	-84.9	-84.9	0.12 (1)	4.49
J- K	-1214 / 0	-84.9	-84.9	0.13 (1)	5.67
K- L	0 / 42	-84.9	-84.9	0.12 (1)	10.00
T- B	-218 / 0	0.0	0.0	0.02 (1)	7.81
M- K	-1705 / 0	0.0	0.0	0.19 (1)	6.37
T- S	0 / 969	-18.5	-18.5	0.36 (4)	10.00
S- R	0 / 1045	-18.5	-18.5	0.37 (4)	10.00
R- Q	0 / 2334	-18.5	-18.5	0.39 (1)	10.00
Q- P	0 / 1414	-18.5	-18.5	0.47 (4)	10.00
P- O	0 / 1573	-18.5	-18.5	0.48 (4)	10.00
O- N	0 / 1120	-18.5	-18.5	0.19 (1)	10.00
N- M	0 / 0	-18.5	-18.5	0.02 (4)	10.00

WEBS

MEMB. FR-TO	MAX. FACTORED FORCE (LBS)	MAX CSI (LC)
C- S	0 / 130	0.03 (1)
S- D	0 / 114	0.04 (4)
D- R	0 / 882	0.14 (1)
R- E	-2182 / 0	0.84 (1)
E- Q	0 / 1850	0.42 (1)
Q- F	-559 / 0	0.29 (1)
Q- H	0 / 1063	0.24 (1)
P- H	0 / 446	0.10 (1)
P- I	-334 / 0	0.10 (1)
O- I	0 / 266	0.06 (1)
O- J	0 / 946	0.21 (1)
N- J	-1378 / 0	0.31 (1)
T- C	-1753 / 0	0.61 (1)
N- K	0 / 1041	0.23 (1)

DESIGN CRITERIA

SPECIFIED LOADS:

TOP CH.	LL =	23.3	PSF
	DL =	6.0	PSF
BOT CH.	LL =	0.0	PSF
	DL =	7.4	PSF
TOTAL LOAD	=	36.7	PSF

SPACING = 24.0 IN. C/C

LOADING IN FLAT SECTION BASED ON A SLOPE OF 2.00/12 MINIMUM

THIS TRUSS IS DESIGNED FOR RESIDENTIAL OR SMALL BUILDING REQUIREMENTS OF PART 9, NBCC 2010, NBCC 2015

THIS DESIGN COMPLIES WITH:
- PART 9 OF BCBC 2018 , OBC 2012 , ABC 2019
- CSA 086-09, CSA 086-14
- TPIC 2011, TPIC 2014

DESIGN ASSUMPTIONS
-OVERHANG NOT TO BE ALTERED OR CUT OFF.

(55 % OF 27.2 P.S.F. G.S.L. PLUS 8.4 P.S.F. RAIN LOAD) EQUALS 23.3 P.S.F. SPECIFIED ROOF LIVE LOAD

ALLOWABLE DEFL.(LL)= L/360 (1.03")
CALCULATED VERT. DEFL.(LL) = L/ 999 (0.12")
ALLOWABLE DEFL.(TL)= L/360 (1.03")
CALCULATED VERT. DEFL.(TL) = L/ 999 (0.33")

CSI: TC=0.47/1.00 (F-H:1) , BC=0.48/1.00 (O-P:4) , WB=0.84/1.00 (E-R:1) , SSI=0.26/1.00 (F-H:1)

DOL LUMBER=1.00 NAIL=1.00 LS BEND=1.10 COMP=1.10 SHEAR=1.10 TENS= 1.10

COMPANION LIVE LOAD FACTOR = 1.00

AUTOSOLVE RIGHT HEEL ONLY

TRUSS PLATE MANUFACTURER IS NOT RESPONSIBLE FOR QUALITY CONTROL IN THE TRUSS MANUFACTURING PLANT .

NAIL VALUES

PLATE	GRIP(DRY) (PSI) MAX	MIN	SHEAR (PLI) MAX	MIN	SECTION (PLI) MAX	MIN
MT20	618	354	1667	788	1987	1656

PLATE PLACEMENT TOL. = 0.250 inches

PLATE ROTATION TOL. = 5.0 Deg.

JSI GRIP= 0.90 (J) (INPUT = 0.90)
JSI METAL= 0.50 (K) (INPUT = 1.00)

JOB NAME	TRUSS NAME	QUANTITY	PLY	JOB DESC.	DRWG NO.
314233	H04T		1	TRUSS DESC. JT-39002	E-19112507

Alpa Roof Truss, Maple

Version 8.300 S Aug 9 2019 MiTek Industries, Inc. Fri Nov 8 12:13:10 2019 Page 1

ID:VRLqmclDiflZCj2mk6F92VyQuye-ZOENCJynyla9N12HZBow91ytEwvjFsPl9R_06?yLG7N

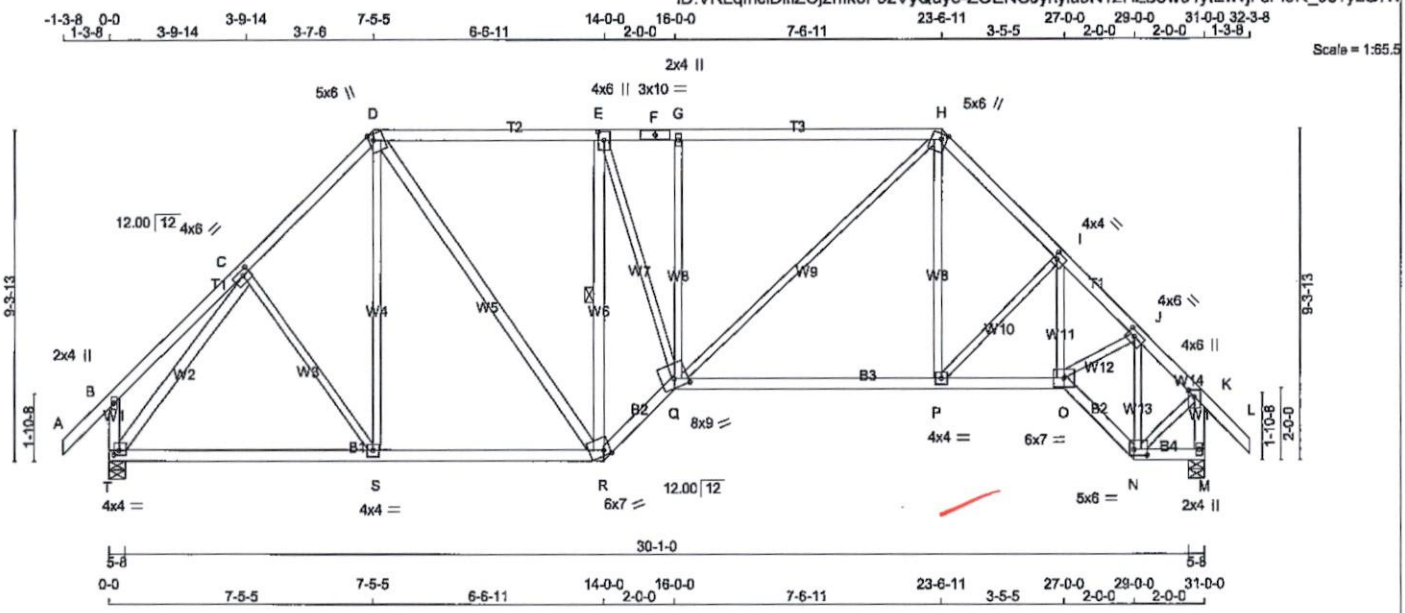

TOTAL WEIGHT = 167 lb

[M]

LUMBER

N. L. G. A. RULES

CHORDS	SIZE		LUMBER	DESCR.
A - D	2x4	DRY	No.2	SPF
D - F	2x4	DRY	No.2	SPF
F - H	2x4	DRY	No.2	SPF
H - L	2x4	DRY	No.2	SPF
T - B	2x4	DRY	No.2	SPF
M - K	2x4	DRY	No.2	SPF
T - R	2x4	DRY	No.2	SPF
R - Q	2x4	DRY	No.2	SPF
Q - O	2x4	DRY	No.2	SPF
O - N	2x4	DRY	No.2	SPF
N - M	2x4	DRY	No.2	SPF
ALL WEBS	2x3	DRY	No.2	SPF
EXCEPT				
D - R	2x4	DRY	No.2	SPF
R - E	2x4	DRY	No.2	SPF
T - C	2x4	DRY	No.2	SPF

DRY: SEASONED LUMBER.

PLATES (table is in inches)

JT	TYPE	PLATES	W	LEN	Y	X
B	TMV+p	MT20	2.0	4.0		
C	TMWW-t	MT20	4.0	6.0	1.75	2.50
D	TTWW+m	MT20	5.0	6.0	2.00	1.50
E	TMWW+t	MT20	4.0	6.0	2.75	2.00
F	TS-t	MT20	3.0	10.0		
G	TMW+w	MT20	2.0	4.0		
H	TTWW+m	MT20	5.0	6.0	1.75	1.75
I	TMWW-t	MT20	4.0	4.0	2.00	1.00
J	TMWW-t	MT20	4.0	6.0	1.75	2.50
K	TMVW+p	MT20	4.0	6.0	2.25	2.00
M	BMV1+p	MT20	2.0	4.0		
N	BBWW-t	MT20	5.0	6.0	2.00	4.50
O	BBWW-t	MT20	6.0	7.0		
P	BMWW-t	MT20	4.0	4.0		
Q	BBWWW-m	MT20	8.0	9.0	3.00	4.50
R	BBWW-m	MT20	6.0	7.0	Edge	2.25
S	BMWW-t	MT20	4.0	4.0		
T	BMVW1-t	MT20	4.0	4.0	1.50	1.75

NOTE: Lateral brace(s) shown shall be 2x4 SPF #2

LICENSED PROFESSIONAL ENGINEER
11/08/2019
R. TURENNE
100157040
PROVINCE OF ONTARIO

DIMENSIONS, SUPPORTS AND LOADINGS SPECIFIED BY FABRICATOR TO BE VERIFIED BY BUILDING DESIGNER

BEARINGS

JT	FACTORED GROSS REACTION VERT	HORZ	MAXIMUM FACTORED GROSS REACTION DOWN	HORZ	UPLIFT	INPUT BRG IN-SX	REQRD BRG IN-SX
M	1723	0	1723	0	0	5-8	2-9
T	1718	0	1718	0	0	5-8	1-14

UNFACTORED REACTIONS

JT	1ST LCASE COMBINED	MAX./MIN. COMPONENT REACTIONS SNOW	LIVE	PERM.LIVE	WIND	DEAD	SOIL
M	1221	788 / 0	0 / 0	0 / 0	0 / 0	433 / 0	0 / 0
T	1217	785 / 0	0 / 0	0 / 0	0 / 0	432 / 0	0 / 0

BEARING MATERIAL TO BE SPF NO.2 OR BETTER AT JOINT(S) M, T

BRACING

TOP CHORD TO BE SHEATHED OR MAX. PURLIN SPACING = 4.05 FT.
MAX. UNBRACED BOTTOM CHORD LENGTH = 10.00 FT OR RIGID CEILING DIRECTLY APPLIED.

ALL PITCH BREAKS AND PERIMETER CORNER JOINTS MUST BE LATERALLY RESTRAINED.

1 LATERAL BRACE(S) AT 1/ 2 LENGTH OF E-R.

END VERTICAL(S) MUST BE SHEATHED OR HAVE BRACES AS INDICATED IN THE MAX. UNBRACED LENGTH COLUMN OF THE TABLE BELOW

LOADING

TOTAL LOAD CASES: (4)

CHORDS

MEMB. FR-TO	MAX. FACTORED FORCE (LBS)	FACTORED VERT. LOAD (PLF) FROM	TO	LC1	MAX CSI (LC)	MAX. UNBRAC LENGTH
A- B	0 / 42	-84.9	-84.9	0.12 (1)		10.00
B- C	0 / 26	-84.9	-84.9	0.19 (1)		10.00
C- D	-1468 / 0	-84.9	-84.9	0.23 (1)		5.17
D- E	-1400 / 0	-84.9	-84.9	0.50 (1)		4.88
E- F	-1822 / 0	-84.9	-84.9	0.59 (1)		4.09
F- G	-1822 / 0	-84.9	-84.9	0.59 (1)		4.09
G- H	-1829 / 0	-84.9	-84.9	0.77 (1)		4.05
H- I	-1855 / 0	-84.9	-84.9	0.17 (1)		4.79
I- J	-2224 / 0	-84.9	-84.9	0.16 (1)		4.44
J- K	-1214 / 0	-84.9	-84.9	0.13 (1)		5.67
K- L	0 / 42	-84.9	-84.9	0.12 (1)		10.00
T- B	-238 / 0	0.0	0.0	0.03 (1)		7.81
M- K	-1705 / 0	0.0	0.0	0.19 (1)		6.37
T- S	0 / 1007	-18.5	-18.5	0.35 (4)		10.00
S- R	0 / 1018	-18.5	-18.5	0.36 (4)		10.00
R- Q	0 / 1938	-18.5	-18.5	0.32 (1)		10.00
Q- P	0 / 1301	-18.5	-18.5	0.34 (4)		10.00
P- O	0 / 1587	-18.5	-18.5	0.38 (1)		10.00
O- N	0 / 1114	-18.5	-18.5	0.19 (1)		10.00
N- M	0 / 0	-18.5	-18.5	0.02 (4)		10.00

WEBS

MEMB. FR-TO	MAX. FACTORED FORCE (LBS)	MAX CSI (LC)
C- S	0 / 48	0.02 (4)
S- D	0 / 143	0.05 (4)
D- R	0 / 647	0.10 (1)
R- E	-1827 / 0	0.74 (1)
E- Q	0 / 1540	0.35 (1)
Q- G	-509 / 0	0.48 (1)
Q- H	0 / 719	0.16 (1)
P- H	0 / 430	0.10 (1)
P- I	-425 / 0	0.17 (1)
O- I	0 / 293	0.07 (1)
O- J	0 / 968	0.22 (1)
N- J	-1371 / 0	0.31 (1)
T- C	-1745 / 0	0.89 (1)
N- K	0 / 1036	0.23 (1)

DESIGN CRITERIA

SPECIFIED LOADS:

TOP CH.	LL	=	23.3	PSF
	DL	=	6.0	PSF
BOT CH.	LL	=	0.0	PSF
	DL	=	7.4	PSF
TOTAL LOAD		=	36.7	PSF

SPACING = 24.0 IN. C/C

LOADING IN FLAT SECTION BASED ON A SLOPE OF 2.00/12 MINIMUM

THIS TRUSS IS DESIGNED FOR RESIDENTIAL OR SMALL BUILDING REQUIREMENTS OF PART 9, NBCC 2010, NBCC 2015

THIS DESIGN COMPLIES WITH:
- PART 9 OF BCBC 2018 , OBC 2012 , ABC 2019
- CSA 086-09, CSA 086-14
- TPIC 2011, TPIC 2014

DESIGN ASSUMPTIONS
-OVERHANG NOT TO BE ALTERED OR CUT OFF.

(55 % OF 27.2 P.S.F. G.S.L. PLUS 8.4 P.S.F. RAIN LOAD) EQUALS 23.3 P.S.F. SPECIFIED ROOF LIVE LOAD

ALLOWABLE DEFL.(LL)= L/360 (1.03")
CALCULATED VERT. DEFL.(LL) = L/ 999 (0.10")
ALLOWABLE DEFL.(TL)= L/360 (1.03")
CALCULATED VERT. DEFL.(TL) = L/ 999 (0.24")

CSI: TC=0.77/1.00 (G-H:1) , BC=0.38/1.00 (O-P:1) , WB=0.89/1.00 (C-T:1) , SSI=0.29/1.00 (G-H:1)

DOL LUMBER=1.00 NAIL=1.00 LS BEND=1.10 COMP=1.10 SHEAR=1.10 TENS= 1.10

COMPANION LIVE LOAD FACTOR = 1.00

AUTOSOLVE RIGHT HEEL ONLY

TRUSS PLATE MANUFACTURER IS NOT RESPONSIBLE FOR QUALITY CONTROL IN THE TRUSS MANUFACTURING PLANT .

NAIL VALUES

PLATE	GRIP(DRY) (PSI) MAX	MIN	SHEAR (PLI) MAX	MIN	SECTION (PLI) MAX	MIN
MT20	618	354	1667	788	1987	1656

PLATE PLACEMENT TOL. = 0.250 Inches

PLATE ROTATION TOL. = 5.0 Deg.

JSI GRIP= 0.90 (K) (INPUT = 0.90)
JSI METAL= 0.50 (K) (INPUT = 1.00)

CONTINUED ON PAGE 2

JOB NAME	TRUSS NAME	QUANTITY	PLY	JOB DESC.	DRWG NO.
314233	H05T		1	TRUSS DESC. JT-39002	E-19112508

Alpa Roof Truss, Maple

Version 8.300 S Aug 9 2019 MiTek Industries, Inc. Fri Nov 8 12:13:23 2019 Page 1

ID:VRLqmclDiflZC|2mk6F92VyQuye-guXlxl6xukDJR1YnpPXzBn_BN9KlojXd9ydC4lyLG7A

Scale = 1:68.5

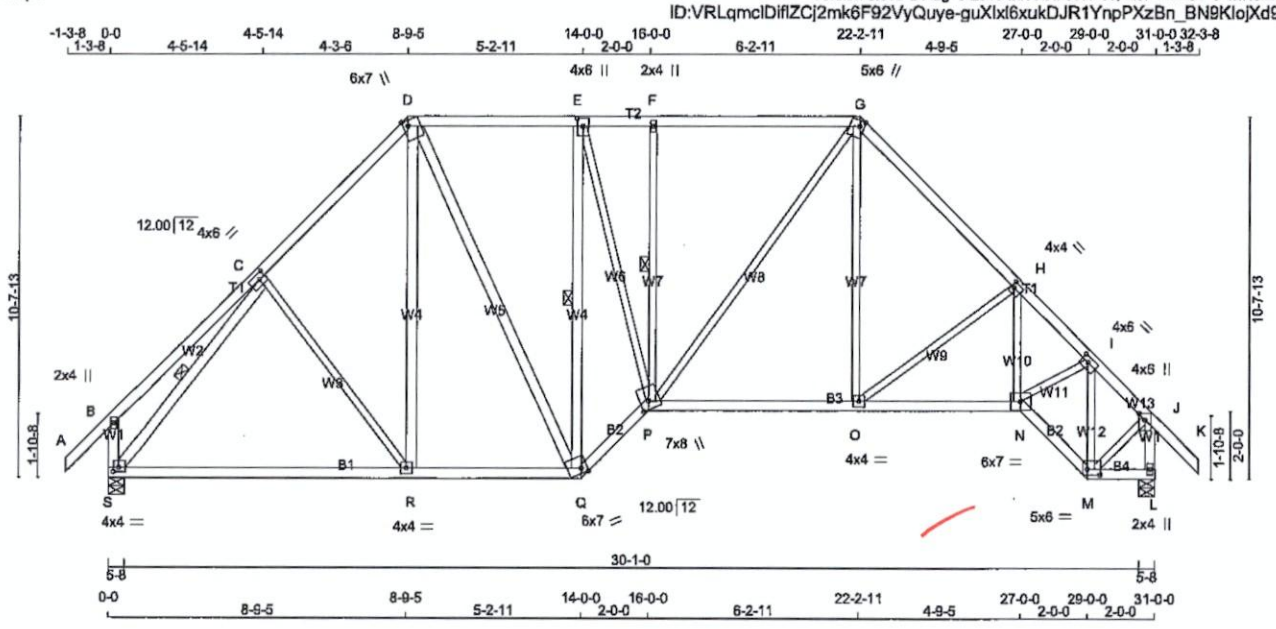

TOTAL WEIGHT = 180 lb

[M][F]

LUMBER

N. L. G. A. RULES

CHORDS	SIZE		LUMBER	DESCR.
A - D	2x4	DRY	No.2	SPF
D - G	2x4	DRY	No.2	SPF
G - K	2x4	DRY	No.2	SPF
S - B	2x4	DRY	No.2	SPF
L - J	2x4	DRY	No.2	SPF
S - Q	2x4	DRY	No.2	SPF
Q - P	2x4	DRY	No.2	SPF
P - N	2x4	DRY	No.2	SPF
N - M	2x4	DRY	No.2	SPF
M - L	2x4	DRY	No.2	SPF
ALL WEBS	2x3	DRY	No.2	SPF
EXCEPT				
R - D	2x4	DRY	No.2	SPF
D - Q	2x4	DRY	No.2	SPF
Q - E	2x4	DRY	No.2	SPF
S - C	2x4	DRY	No.2	SPF

DRY: SEASONED LUMBER.

PLATES (table is in inches)

JT	TYPE	PLATES	W	LEN	Y	X
B	TMV+p	MT20	2.0	4.0		
C	TMWW-t	MT20	4.0	6.0	2.00	2.25
D	TTWW+m	MT20	6.0	7.0	Edge	1.75
E	TMWW+t	MT20	4.0	6.0	2.75	2.00
F	TMW+w	MT20	2.0	4.0		
G	TTWW+m	MT20	5.0	6.0	2.00	1.50
H	TMWW-t	MT20	4.0	4.0	2.00	1.00
I	TMWW-t	MT20	4.0	6.0	1.75	2.50
J	TMVW+p	MT20	4.0	6.0	2.25	2.00
L	BMV1+p	MT20	2.0	4.0		
M	BBWW-l	MT20	5.0	6.0	2.00	4.50
N	BBWW-l	MT20	6.0	7.0		
O	BMWW-t	MT20	4.0	4.0		
P	BBWWW+m	MT20	7.0	8.0	3.00	3.00
Q	BBWW-m	MT20	6.0	7.0	Edge	2.25
R	BMWW-t	MT20	4.0	4.0		
S	BMVW1-t	MT20	4.0	4.0	1.50	1.75

Edge - INDICATES REFERENCE CORNER OF PLATE TOUCHES EDGE OF CHORD.

NOTE: Lateral brace(s) shown shall be 2x4 SPF #2

LICENSED PROFESSIONAL ENGINEER
11/08/2019
R. TURENNE
100157040
PROVINCE OF ONTARIO

DIMENSIONS, SUPPORTS AND LOADINGS SPECIFIED BY FABRICATOR TO BE VERIFIED BY BUILDING DESIGNER

BEARINGS

JT	FACTORED GROSS REACTION VERT	HORZ	MAXIMUM FACTORED GROSS REACTION DOWN	HORZ	UPLIFT	INPUT BRG IN-SX	REQRD BRG IN-SX
L	1723	0	1723	0	0	5-8	2-9
S	1718	0	1718	0	0	5-8	1-14

UNFACTORED REACTIONS

JT	1ST LCASE COMBINED	MAX/MIN. COMPONENT REACTIONS SNOW	LIVE	PERM.LIVE	WIND	DEAD	SOIL
L	1221	788 / 0	0 / 0	0 / 0	0 / 0	433 / 0	0 / 0
S	1217	785 / 0	0 / 0	0 / 0	0 / 0	432 / 0	0 / 0

BEARING MATERIAL TO BE SPF NO.2 OR BETTER AT JOINT(S) L, S

BRACING

TOP CHORD TO BE SHEATHED OR MAX. PURLIN SPACING = 4.38 FT.
MAX. UNBRACED BOTTOM CHORD LENGTH = 10.00 FT OR RIGID CEILING DIRECTLY APPLIED.

ALL PITCH BREAKS AND PERIMETER CORNER JOINTS MUST BE LATERALLY RESTRAINED.

1 LATERAL BRACE(S) AT 1/ 2 LENGTH OF E-Q, F-P, C-S.

END VERTICAL(S) MUST BE SHEATHED OR HAVE BRACES AS INDICATED IN THE MAX. UNBRACED LENGTH COLUMN OF THE TABLE BELOW

LOADING

TOTAL LOAD CASES: (4)

CHORDS

MEMB. FR-TO	MAX. FACTORED FORCE (LBS)	FACTORED VERT. LOAD LC1 (PLF) FROM	TO	MAX CSI (LC)	MAX. UNBRAC LENGTH
A- B	0 / 42	-84.9	-84.9	0.12 (1)	10.00
B- C	0 / 31	-84.9	-84.9	0.27 (1)	10.00
C- D	-1427 / 0	-84.9	-84.9	0.24 (1)	5.23
D- E	-1207 / 0	-84.9	-84.9	0.28 (1)	5.51
E- F	-1512 / 0	-84.9	-84.9	0.30 (1)	5.02
F- G	-1517 / 0	-84.9	-84.9	0.42 (1)	4.85
G- H	-1737 / 0	-84.9	-84.9	0.27 (1)	4.82
H- I	-2222 / 0	-84.9	-84.9	0.23 (1)	4.38
I- J	-1212 / 0	-84.9	-84.9	0.10 (1)	5.72
J- K	0 / 42	-84.9	-84.9	0.12 (1)	10.00
S- B	-258 / 0	0.0	0.0	0.03 (1)	7.81
L- J	-1705 / 0	0.0	0.0	0.19 (1)	6.37
S- R	0 / 1030	-18.5	-18.5	0.41 (4)	10.00
R- Q	0 / 987	-18.5	-18.5	0.41 (4)	10.00
Q- P	0 / 1676	-18.5	-18.5	0.28 (1)	10.00
P- O	0 / 1212	-18.5	-18.5	0.29 (1)	10.00
O- N	0 / 1611	-18.5	-18.5	0.35 (1)	10.00
N- M	0 / 1105	-18.5	-18.5	0.19 (1)	10.00
M- L	0 / 0	-18.5	-18.5	0.02 (4)	10.00

WEBS

MEMB. FR-TO	MAX. FACTORED FORCE (LBS)	MAX CSI (LC)
C- R	-75 / 22	0.08 (1)
R- D	0 / 224	0.04 (4)
D- Q	0 / 486	0.08 (1)
Q- E	-1573 / 0	0.90 (1)
E- P	0 / 1312	0.30 (1)
P- F	-423 / 0	0.20 (1)
P- G	0 / 509	0.11 (1)
O- G	0 / 418	0.09 (1)
O- H	-507 / 0	0.32 (1)
N- H	0 / 288	0.06 (1)
N- I	0 / 1004	0.23 (1)
M- I	-1359 / 0	0.30 (1)
S- C	-1732 / 0	0.44 (1)
M- J	0 / 1027	0.23 (1)

DESIGN CRITERIA

SPECIFIED LOADS:

TOP CH.	LL	=	23.3	PSF
	DL	=	6.0	PSF
BOT CH.	LL	=	0.0	PSF
	DL	=	7.4	PSF
TOTAL LOAD		=	36.7	PSF

SPACING = 24.0 IN. C/C

LOADING IN FLAT SECTION BASED ON A SLOPE OF 2.00/12 MINIMUM

THIS TRUSS IS DESIGNED FOR RESIDENTIAL OR SMALL BUILDING REQUIREMENTS OF PART 9, NBCC 2010, NBCC 2015

THIS DESIGN COMPLIES WITH:
- PART 9 OF BCBC 2018 , OBC 2012 , ABC 2019
- CSA 086-09, CSA 086-14
- TPIC 2011, TPIC 2014

DESIGN ASSUMPTIONS
-OVERHANG NOT TO BE ALTERED OR CUT OFF.

(55 % OF 27.2 P.S.F. G.S.L. PLUS 8.4 P.S.F. RAIN LOAD) EQUALS 23.3 P.S.F. SPECIFIED ROOF LIVE LOAD

ALLOWABLE DEFL.(LL)= L/360 (1.03")
CALCULATED VERT. DEFL.(LL) = L/ 999 (0.09")
ALLOWABLE DEFL.(TL)= L/360 (1.03")
CALCULATED VERT. DEFL.(TL) = L/ 999 (0.21")

CSI: TC=0.42/1.00 (F-G:1) , BC=0.41/1.00 (Q-R:4) , WB=0.90/1.00 (E-Q:1) , SSI=0.23/1.00 (F-G:1)

DOL LUMBER=1.00 NAIL=1.00 LS BEND=1.10 COMP=1.10 SHEAR=1.10 TENS= 1.10

COMPANION LIVE LOAD FACTOR = 1.00

AUTOSOLVE RIGHT HEEL ONLY

TRUSS PLATE MANUFACTURER IS NOT RESPONSIBLE FOR QUALITY CONTROL IN THE TRUSS MANUFACTURING PLANT .

NAIL VALUES

PLATE	GRIP(DRY) (PSI) MAX	MIN	SHEAR (PLI) MAX	MIN	SECTION (PLI) MAX	MIN
MT20	618	354	1667	788	1987	1656

PLATE PLACEMENT TOL. = 0.250 Inches

PLATE ROTATION TOL. = 5.0 Deg.

JSI GRIP= 0.90 (J) (INPUT = 0.90)
JSI METAL= 0.50 (J) (INPUT = 1.00)

JOB NAME	TRUSS NAME	QUANTITY	PLY	JOB DESC.	DRWG NO.
314233	J01T		1	TRUSS DESC. JT-39002	E-19112509

Alpa Roof Truss, Maple

Version 8.300 S Aug 9 2019 MiTek Industries, Inc. Fri Nov 8 12:09:33 2019 Page 1

ID:VRLqmclDiflZCj2mk6F92VyQuye-PedLg6Kg34EyrhyaL6P1sHTzGSwDvwrmGAw1?4yLGAm

Scale = 1:33.7

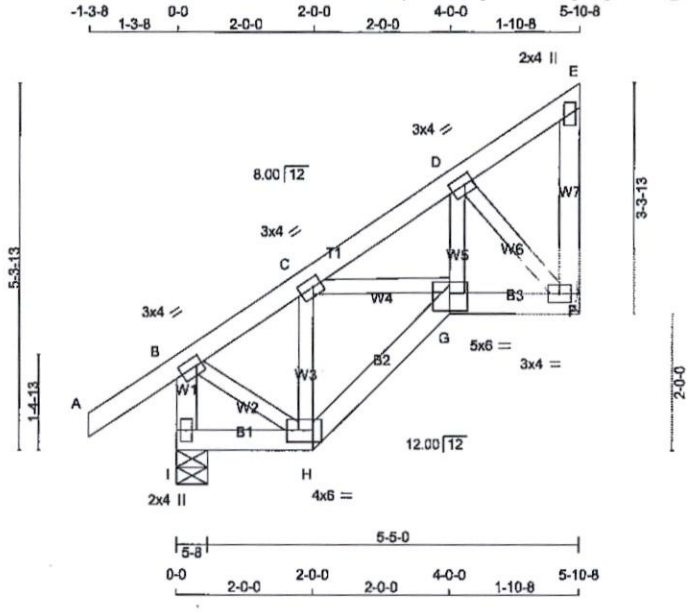

TOTAL WEIGHT = 7 X 30 = 209 lb

[M]

LUMBER

N. L. G. A. RULES

CHORDS	SIZE		LUMBER	DESCR.
I - B	2x4	DRY	No.2	SPF
A - E	2x4	DRY	No.2	SPF
F - E	2x4	DRY	No.2	SPF
I - H	2x4	DRY	No.2	SPF
H - G	2x4	DRY	No.2	SPF
G - F	2x4	DRY	No.2	SPF
ALL WEBS	2x3	DRY	No.2	SPF

DRY: SEASONED LUMBER.

PLATES (table is in inches)

JT	TYPE	PLATES	W	LEN	Y	X
B	TMWW-t	MT20	3.0	4.0	1.50	1.00
C	TMWW-t	MT20	3.0	4.0	1.50	1.50
D	TMWW-t	MT20	3.0	4.0	1.50	1.50
E	TMV+p	MT20	2.0	4.0		
F	BMVW1-t	MT20	3.0	4.0		
G	BBWW-l	MT20	5.0	6.0	3.00	3.00
H	BBWW-l	MT20	4.0	6.0	2.00	4.50
I	BMV1+p	MT20	2.0	4.0		

NOTE: Lateral brace(s) shown shall be 2x4 SPF #2

LICENSED PROFESSIONAL ENGINEER
11/08/2019
R. TURENNE
100157040
PROVINCE OF ONTARIO

DIMENSIONS, SUPPORTS AND LOADINGS SPECIFIED BY FABRICATOR TO BE VERIFIED BY BUILDING DESIGNER

BEARINGS

JT	FACTORED GROSS REACTION VERT	HORZ	MAXIMUM FACTORED GROSS REACTION DOWN	HORZ	UPLIFT	INPUT BRG IN-SX	REQRD BRG IN-SX
I	434	0	434	0	0	5-8	1-8
F	290	0	290	0	0	MECHANICAL	

A SUITABLE HANGER/MECHANICAL CONNECTION IS REQUIRED AT JOINT F. MINIMUM BEARING LENGTH AT JOINT F = 1-8.

UNFACTORED REACTIONS

MAX./MIN. COMPONENT REACTIONS

JT	1ST LCASE COMBINED	SNOW	LIVE	PERM.LIVE	WIND	DEAD	SOIL
I	305	208 / 0	0 / 0	0 / 0	0 / 0	97 / 0	0 / 0
F	206	129 / 0	0 / 0	0 / 0	0 / 0	77 / 0	0 / 0

BEARING MATERIAL TO BE SPF NO.2 OR BETTER AT JOINT(S) I

BRACING

TOP CHORD TO BE SHEATHED OR MAX. PURLIN SPACING = 6.25 FT.
MAX. UNBRACED BOTTOM CHORD LENGTH = 10.00 FT OR RIGID CEILING DIRECTLY APPLIED.

ALL PITCH BREAKS AND PERIMETER CORNER JOINTS MUST BE LATERALLY RESTRAINED.

LOADING

TOTAL LOAD CASES: (4)

CHORDS

MEMB. FR-TO	MAX. FACTORED FORCE (LBS)	FACTORED VERT. LOAD LC1 (PLF) FROM	TO	MAX CSI (LC)	MAX. UNBRAC LENGTH
I- B	-415 / 0	0.0	0.0	0.04 (1)	7.81
A- B	0 / 32	-84.9	-84.9	0.11 (1)	10.00
B- C	-204 / 0	-84.9	-84.9	0.11 (1)	6.25
C- D	-264 / 0	-84.9	-84.9	0.05 (1)	6.25
D- E	-11 / 0	-84.9	-84.9	0.05 (1)	6.25
F- E	-56 / 0	0.0	0.0	0.01 (1)	7.81
I- H	0 / 0	-18.5	-18.5	0.02 (4)	10.00
H- G	0 / 204	-18.5	-18.5	0.05 (1)	10.00
G- F	0 / 215	-18.5	-18.5	0.05 (1)	10.00

WEBS

MEMB. FR-TO	MAX. FACTORED FORCE (LBS)	MAX CSI (LC)
B- H	0 / 173	0.04 (1)
H- C	-188 / 0	0.03 (1)
C- G	0 / 81	0.02 (1)
G- D	0 / 172	0.04 (1)
D- F	-308 / 0	0.05 (1)

DESIGN CRITERIA

SPECIFIED LOADS:

TOP CH.	LL	=	23.3	PSF
	DL	=	6.0	PSF
BOT CH.	LL	=	0.0	PSF
	DL	=	7.4	PSF
TOTAL LOAD		=	36.7	PSF

SPACING = 24.0 IN. C/C

THIS TRUSS IS DESIGNED FOR RESIDENTIAL OR SMALL BUILDING REQUIREMENTS OF PART 9, NBCC 2010, NBCC 2015

THIS DESIGN COMPLIES WITH:
- PART 9 OF BCBC 2018 , OBC 2012 , ABC 2019
- CSA 086-09, CSA 086-14
- TPIC 2011, TPIC 2014

DESIGN ASSUMPTIONS
-OVERHANG NOT TO BE ALTERED OR CUT OFF.

(55 % OF 27.2 P.S.F. G.S.L. PLUS 8.4 P.S.F. RAIN LOAD) EQUALS 23.3 P.S.F. SPECIFIED ROOF LIVE LOAD

ALLOWABLE DEFL.(LL)= L/360 (0.20")
CALCULATED VERT. DEFL.(LL) = L/ 999 (0.00")
ALLOWABLE DEFL.(TL)= L/360 (0.20")
CALCULATED VERT. DEFL.(TL) = L/ 999 (0.01")

CSI: TC=0.11/1.00 (A-B:1) , BC=0.05/1.00 (F-G:1) , WB=0.05/1.00 (D-F:1) , SSI=0.08/1.00 (A-B:1)

DOL LUMBER=1.00 NAIL=1.00 LS BEND=1.10 COMP=1.10 SHEAR=1.10 TENS= 1.10

COMPANION LIVE LOAD FACTOR = 1.00

TRUSS PLATE MANUFACTURER IS NOT RESPONSIBLE FOR QUALITY CONTROL IN THE TRUSS MANUFACTURING PLANT .

NAIL VALUES

PLATE	GRIP(DRY) (PSI) MAX	MIN	SHEAR (PLI) MAX	MIN	SECTION (PLI) MAX	MIN
MT20	618	354	1667	788	1987	1656

PLATE PLACEMENT TOL. = 0.250 inches

PLATE ROTATION TOL. = 5.0 Deg.

JSI GRIP= 0.56 (B) (INPUT = 0.90)
JSI METAL= 0.12 (B) (INPUT = 1.00)

SIMPSON Strong-Tie

May 27, 2019

Re: Expiration Date for Technical Bulletins Extended to 12/31/2019

Please be advised that the expiration date of the Technical Bulletins listed below has been extended until December 31, 2019.

T-SPECCP17	T-SPECH17	T-SPECDSHGUS17R
T-SPECHGUS17-R	T-SPECHHUS17-R	T-SPECHUS17
T-SPECLF17	T-SPECLT17	T-SPECLU17
T-SPECCLUL17	T-SPECLUS17	T-SPECSUR17
T-SPECTBE17	T-SPECTC17	T-SPECTHGB17
T-SPECTHGBHV17	T-SPECTHGQ17	T-SPECTHGW17
T-SPECLSULSSU17	T-SPECHTHGQ17	T-SPECSTHGQ17

Should you have any questions or concerns regarding the above, please contact me at your convenience.

Sincerely,

Brent Bunting, P.Eng.
Simpson Strong-Tie Canada, Ltd.

LICENSED PROFESSIONAL ENGINEER
5/28/2019
B. D. BUNTING
PROVINCE OF ONTARIO

LUS – Double Shear Joist Hangers

SIMPSON Strong-Tie®

All LUS hangers have double shear nailing. This patented innovation distributes the load through two points on each joist nail for greater strength. It also allows the use of fewer nails, faster installation and the use of common nails for all connections.

Material: 18 gauge

Finish: G90 galvanized

Design:

- Factored resistances are in accordance with CSA O86-14.
- Uplift resistances have been increased 15%. No further increase is permitted.
- Wood shear is not considered in the factored resistances given. The specifier must ensure that the joist and header capacities are capable of withstanding these loads.

Installation:

- Use all specified fasteners.
- Nails: 16d = 0.162" dia. x 3½" long common wire, 10d = 0.148" x 3" long common wire.
- Double shear nails must be driven at an angle through the joist or truss into the header to achieve the table loads.
- Not designed for welded or nailer applications.

Options:

- These hangers cannot be modified

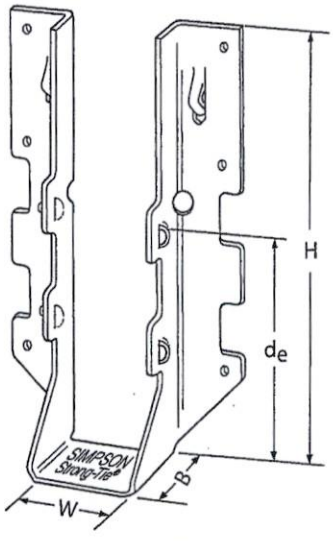

LUS28

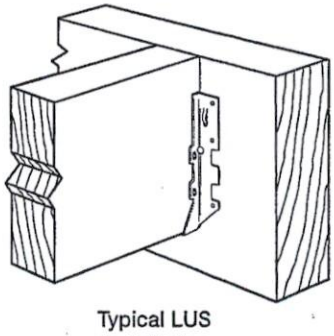

Typical LUS Installation

Model No.	Ga.	Dimensions (in.)				Fasteners		Factored Resistance (lb.)			
								D.Fir-L		S-P-F	
		W	H	B	d_e[1]	Face	Joist	Uplift (K_D=1.15)	Normal (K_D=1.00)	Uplift (K_D=1.15)	Normal (K_D=1.00)
LUS24	18	1 9/16	3 1/8	1 3/4	1 15/16	(4) 10d	(2) 10d	710	1630	645	1155
LUS24-2	18	3 1/8	3 1/8	2	1 13/16	(4) 16d	(2) 16d	835	2020	590	1435
LUS26	18	1 9/16	4 3/4	1 3/4	3 5/8	(4) 10d	(4) 10d	1420	2170	1290	1630
LUS26-2	18	3 1/8	4 7/8	2	4	(4) 16d	(4) 16d	1720	2595	1545	1920
LUS26-3	18	4 5/8	4 3/16	2	3 1/4	(4) 16d	(4) 16d	1720	2595	1545	2340
LUS28	18	1 9/16	6 5/8	1 3/4	3 3/4	(6) 10d	(6) 10d	1420	2520	1290	1790
LUS28-2	18	3 1/8	7	2	4	(6) 16d	(4) 16d	1720	3325	1545	2575
LUS28-3	18	4 5/8	6 1/4	2	3 1/4	(6) 16d	(4) 16d	1720	3325	1545	2375
LUS210	18	1 9/16	7 13/16	1 3/4	3 7/8	(8) 10d	(4) 10d	1420	2785	1290	2210
LUS210-2	18	3 1/8	9	2	6	(8) 16d	(6) 16d	2580	4500	2320	3195
LUS210-3	18	4 5/8	8 3/16	2	5 1/4	(8) 16d	(6) 16d	2580	3345	2320	2375

1. d_e is the distance from the seat of the hanger to the highest joist nail.

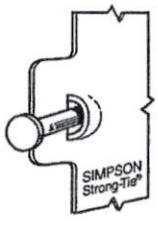

Dome Double Shear Nailing prevents tabs breaking off (available on some models).

U.S. Patent 5,603,580

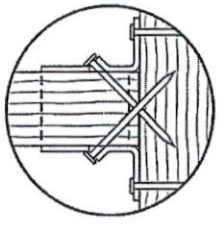

Double Shear Nailing Top View.

LICENSED PROFESSIONAL ENGINEER
4/5/2017
B. D. BUNTING
PROVINCE OF ONTARIO

LIMIT STATES DESIGN

This technical bulletin is effective until June 30, 2019, and reflects information available as of March 1, 2017. This information is updated periodically and should not be relied upon after June 30, 2019. Contact Simpson Strong-Tie for current information and limited warranty or see strongtie.com.

© 2017 Simpson Strong-Tie Company Inc.

(800) 999-5099
strongtie.com

TC – Truss Connectors

SIMPSON Strong-Tie®

The TC truss connector is an ideal connector for scissor trusses and can allow horizontal movement up to 1¼". The TC also attaches plated trusses to top plates or sill plates to resist uplift forces. Typically used on one or both ends of truss as determined by the building designer.

Material: 16 gauge

Finish: G90 galvanized

Design: Factored resistances are in accordance with CSA 086-14

Installation:

- Use all specified fasteners.
- Nails: 10d = 0.148" dia. x 3" long common wire, 10d x 1½ = 0.148" dia. x 1½" long.
- Drive 10d nails into the truss at the inside end of the slotted holes (inside end is towards the centre of the truss) and clinch on the back side. Do not seat these nails into the truss–allow room under the nail head for movement of the truss with respect to the wall.

Optional TC Installation:

- Bend one flange up 90°. Drive specified nails into the top and face of the top plates or install Titen® screws into the top and face of masonry wall. See optional load tables and installation details.

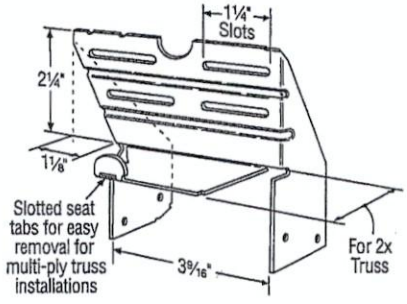

TC24
U.S. Patent 4,932,173

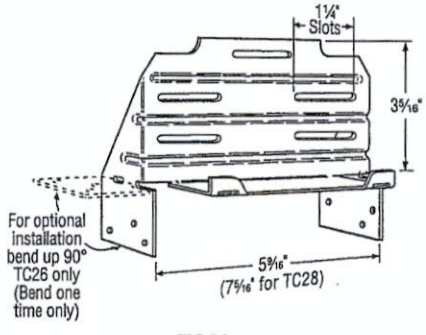

TC26
(TC28 Similiar)

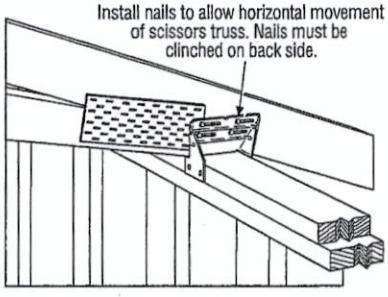

Typical TC24 Installation

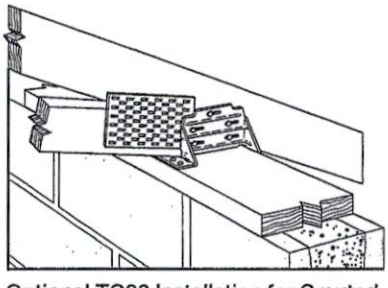

Optional TC26 Installation for Grouted Concrete Block using a Wood Nailer
(8", 10", 12" Wall Installation Similar)

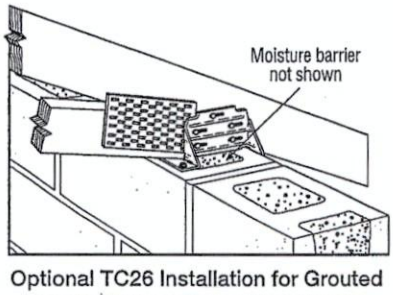

Optional TC26 Installation for Grouted Concrete Block using Titen Screws

Model No.	Fasteners		Factored Resistance	
	Truss	Wall Plates	D.Fir-L	S-P-F
			Uplift (K_D=1.15)	Uplift (K_D=1.15)
			lb.	lb.
TC24	(4) 10d	(4) 10d	605	430
TC26	(5) 10d	(6) 10d	1015	720
TC28	(5) 10d	(6) 10d	1015	720

Optional TC Installation Table

Model No.	Fasteners		Factored Resistance	
	Truss	Wall Plates	D.Fir-L	S-P-F
			Uplift (K_D=1.15)	Uplift (K_D=1.15)
			lb.	lb.
TC26	(5) 10d	(6) 10d x 1½"	810	660
	(5) 10d	(6) 10d	930	660

1. Factored resistances have been increased 15% for earthquake or wind loading; no further increase allowed; reduce where other loads govern.
2. Grout strength is 15 MPa minimum.
3. Optional TC26 installation with 10d nails requires minimum 3" top plate thickness.
4. TC26 fastened to grouted concrete block with (6) – ⁹⁄₁₆" x 2¼" Titen screws has a factored uplift resistance of 275 lb.

LIMIT STATES DESIGN

This technical bulletin is effective until June 30, 2019, and reflects information available as of March 1, 2017. This information is updated periodically and should not be relied upon after June 30, 2019. Contact Simpson Strong-Tie for current information and limited warranty or see strongtie.com.

© 2017 Simpson Strong-Tie Company Inc.

(800) 999-5099
strongtie.com

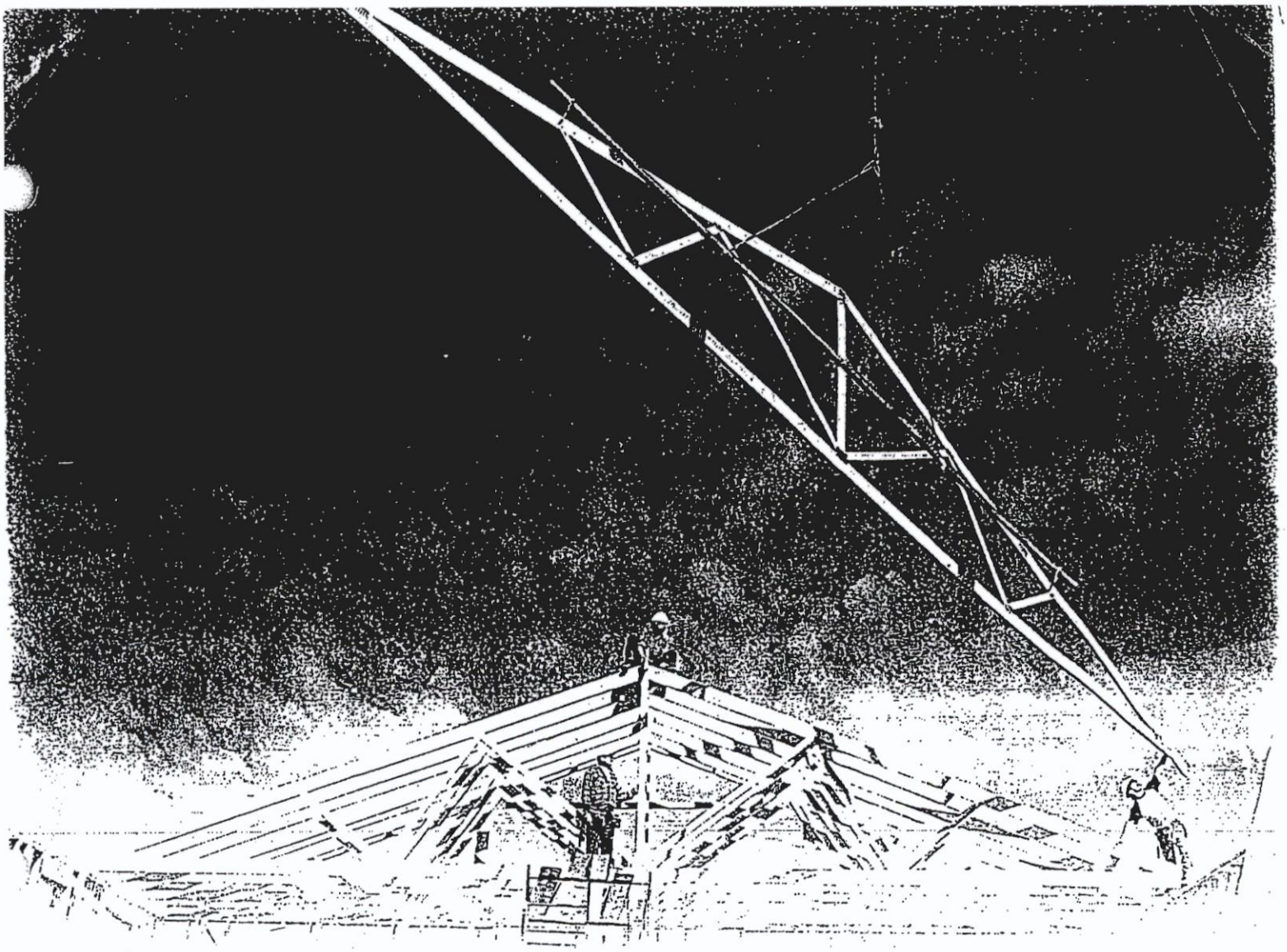

Wood Truss Installation

A Guide to proper handling, erecting and bracing metal plate connected wood trusses

Table of Content

Warning.....4

1 Unloading & Lifting.....5

2 Job Site Handling.....5

3 Hoisting.....6

4 Beginning the Erection Process.....7

5 Erection Tolerance.....8

6 Bracing.....8

7 Bracing Requirements for 3 Planes of Roof.....9

8 Stacking Materials.....10

Caution Notes.....11

Warning

General

Familiarity with the **Construction Design Documents**, the **Truss Design Drawings**, and **Truss Placement Plans** (if required by the **Construction Design Documents**) is required to properly erect, brace, and connect the trusses to the building system.

All of the care and quality involved in the design and manufacture of wood trusses can be jeopardized if the trusses are not properly handled, erected, and braced.

The consequences of improper handling, erecting, and bracing may be a collapse of the structure, which at best is a substantial loss of time and materials, and at worst is a loss of life. The majority of truss accidents occur during truss installation and not as a result of improper design or manufacture.

Prior to truss erection, the builder/erector shall meet with the erection crew for a safety and planning meeting, making sure each crew member understands his or her roles and responsibilities during the erection process.

Temporary Erection Bracing

Trusses are not marked in any way to identify the frequency, or location of temporary erection bracing.

All temporary bracing shall comply with the latest edition of *Commentary and Recommendations for Handling, Installing & Bracing Metal Plate Connected Wood Trusses* (HIB), published by the Truss Plate Institute, and/or as specified in the **Construction Design Documents** prepared by the building designer.

Permanent Truss Bracing

Permanent bracing for the roof or floor trusses is the responsibility of the building designer and should be shown on the **Construction Design Documents**. Permanent bracing locations for individual compression members of a wood truss are shown on the **Truss Design Drawings**, and shall be installed by the building or erection contractor. This bracing is needed for the proper performance of individual trusses within the roof or floor system. The design and connection of the bracing to the truss and then to the overall building system is the responsibility of the building designer, and is in addition to the permanent bracing plan, which is also specified by the building designer.

Special Design Requirements

Special design requirements, such as wind bracing, portal bracing, seismic bracing, diaphragms, shear walls, or other load transfer elements and their connections to wood trusses must be considered separately by the building designer, who shall determine size, location, and method of connections for all bracing as needed to resist these forces.

1 Unloading & Lifting

Never handle trusses flat

Beginning with the unloading process, and throughout all phases of construction, care must be taken to avoid **lateral bending** of trusses, which can cause damage to the lumber and metal connector plates at the joints.

Avoid lateral bending

- **Use special care in windy weather.**
- **If using a crane within 10 feet of an electric line, contact the local power company.**
- **If using a crane within 5 miles of an airport, contact the airport 30 days prior to erection to learn about any safety regulations that must be followed.**

2 Job Site Handling

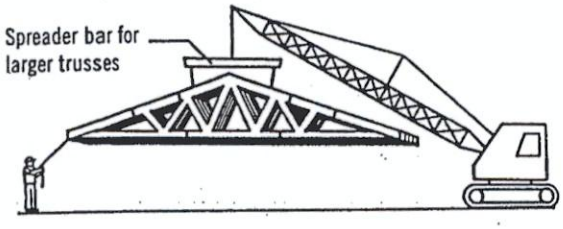

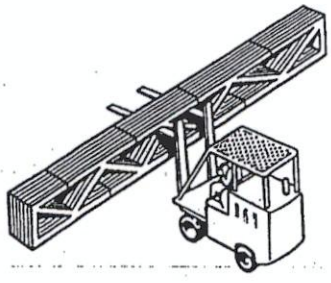

All trusses should be picked up at the top chords in a vertical position only

Proper banding and smooth ground allow for unloading of trusses without damage. This should be done as close to the building site as possible to minimize handling. Do not break banding until installation begins. Hand erection of trusses is allowed, provided excessive lateral bending is prevented.

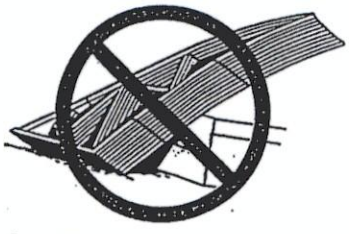

Do not store unbraced bundles upright

If trusses are stored vertically they shall be braced in a manner that will prevent tipping or topping. Generally cuting of the banding is done just prior to installation.

Do not store on uneven ground

If trusses are stored horizontally, blocking should be used on eight to ten foot centers, or as required, to minimize lateral bending and moisture gain.

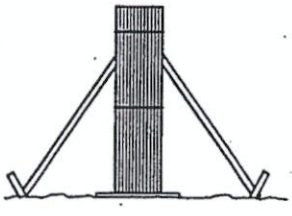

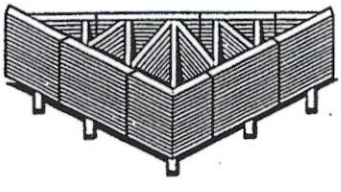

Care should be exercised when removing banding to avoid damaging trusses.

During long term storage, trusses shall be protected from the environment in a manner that provides for adequate ventilation of the trusses. If tarpaulins or other material is used, the ends shall be left open for ventilation. Plastic is not recommended, since it can trap moisture.

3 Hoisting

All trusses that are erected one at a time shall be held safely in position by the erection equipment until such time as all necessary bracing has been installed and the ends of the trusses are securely fastened to the building.

Avoid lateral bending

L ≤ 30'

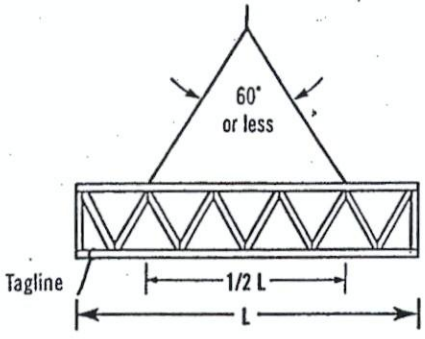

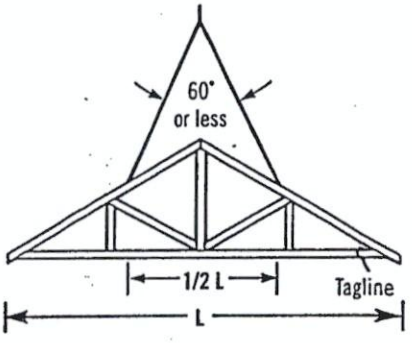

Truss sling is acceptable where these criteria are met.

30' < L ≤ 60'

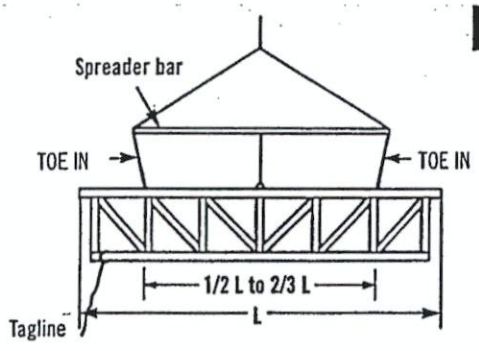

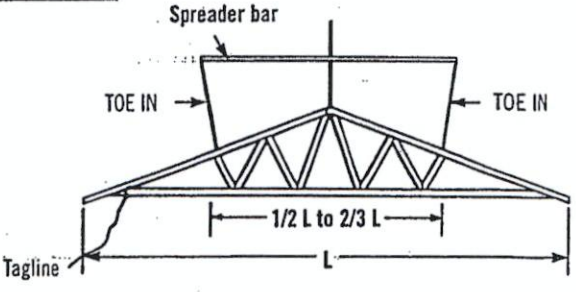

Use spreader bar in all other cases. It should be noted that the lines from the ends of the spreader bar **"TOE IN"**; if these lines should **"TOE OUT"** the truss may fold in half.

L > 60'

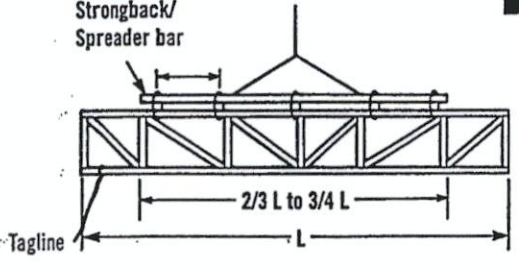

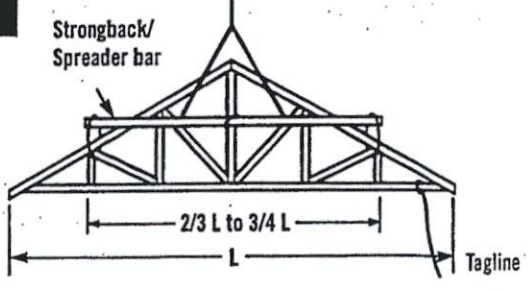

For lifting trusses with spans in excess of 60 feet, it is recommended that a strongback/spreader bar be used as illustrated. The strongback/spreader bar should be attached to the top chord and web members at intervals of approximately 10 feet. Further, the strongback/spreader bar should be at or above the mid-height of the truss to prevent overturning. The strongback/spreader bar can be of any material with sufficient strength to safely carry the weight of the truss and sufficient rigidity to adequately resist bending of the truss.

4 Beginning the Erection Process

It is important for the builder or erection contractor to provide substantial bracing for the first truss erected. The two or more trusses making up the rest of the first set are tied to and rely upon the first truss for stability. Likewise, after this first set of trusses is adequately cross-braced, the remaining trusses installed rely upon this first set for stability. Thus, the performance of the truss bracing system depends to a great extent on how well the first group of trusses is braced.

Ground Brace – Exterior

One satisfactory method ties the first unit of trusses off to a series of braces that are attached to a stake driven into the ground and securely anchored. The ground brace itself should be supported as shown below or it is apt to buckle. Additional ground braces in the opposite direction, inside the building, are also recommended.

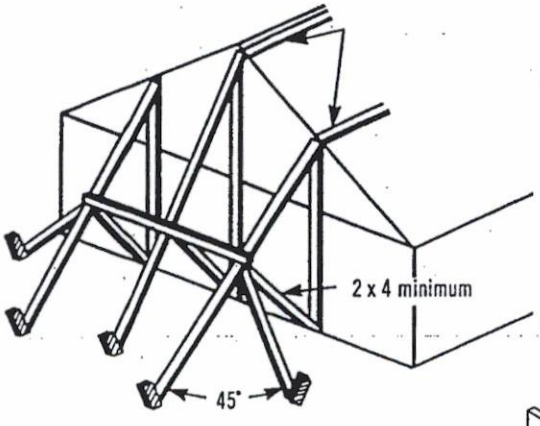

Note: Locate ground braces for first truss directly in line with all rows of top chord continuous lateral bracing (either temporary or permanent).

Ground Brace – Interior

Another satisfactory method where height of building or ground conditions prohibit bracing from the exterior is to tie the first truss rigidly in place from the interior at the floor level, provided the floor is substantially completed and capable of supporting the ground bracing forces. Securely fasten the first truss to the middle of the building. Brace the bracing similar to exterior ground bracing shown at left. Set trusses from the middle toward the end of the building. Properly cross-brace the first set of trusses before removing floor braces and setting remaining trusses.

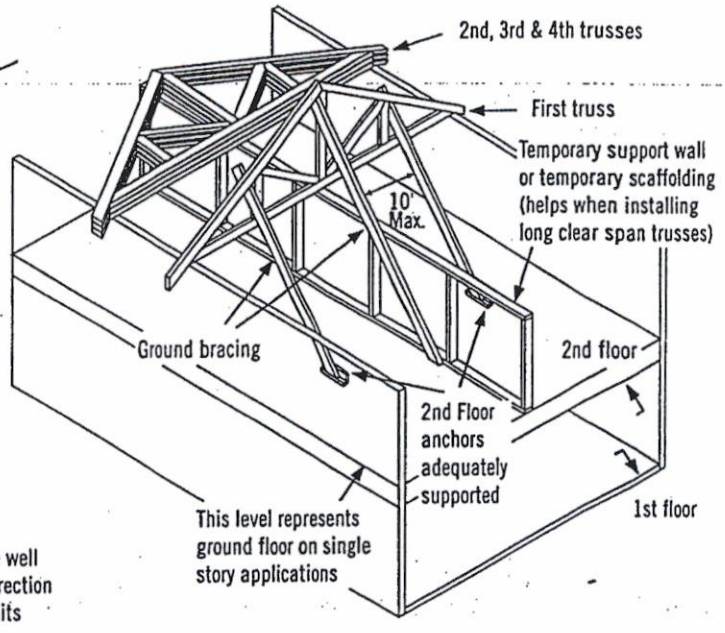

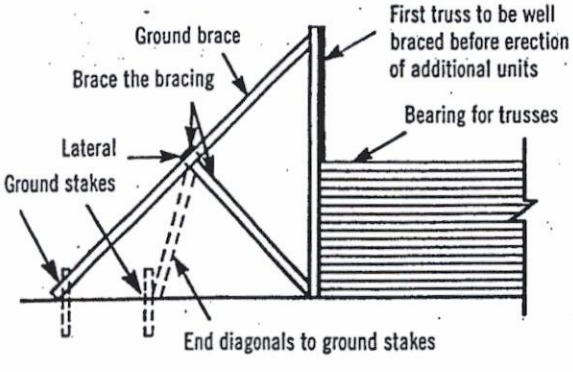

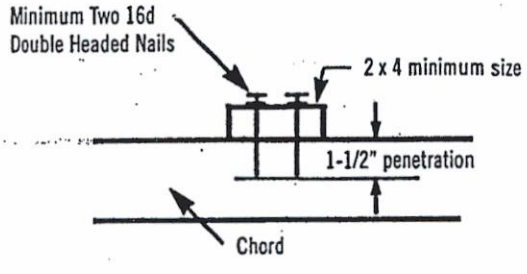

Inadequate size of bracing material or inadequate fastening is a major cause of erection dominoing.

5 Erection Tolerance

Complying with erection tolerances is critical to achieving an acceptable roof or floor line, and to accomplishing effective bracing. Setting trusses within tolerance the first time will prevent the need for the hazardous practice of respacing or adjusting trusses when roof sheathing or roof purlins are installed. Trusses leaning or bowing can cause nails to miss the top chords when sheathing is applied, and create cumulative stresses on the bracing, which is a frequent cause of dominoing.

When sheathing, make sure nails are driven into the top chord of the trusses.

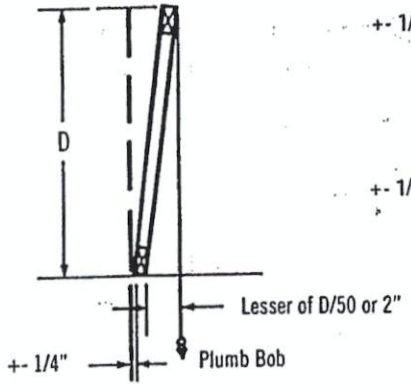

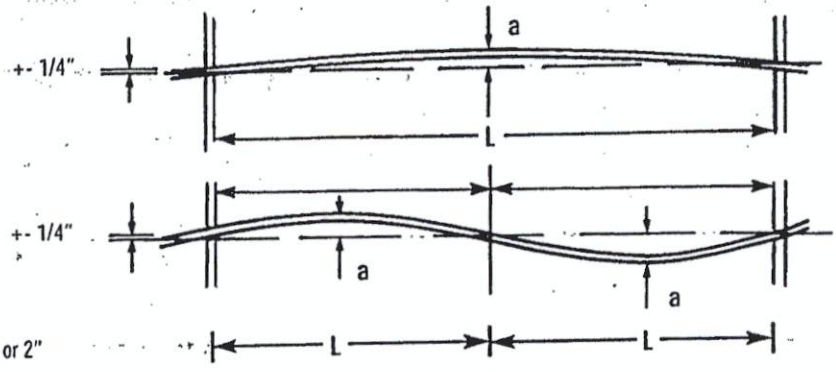

L = 16' to 32', a = 1"
L = 32' & over, a = 2"

6 Bracing

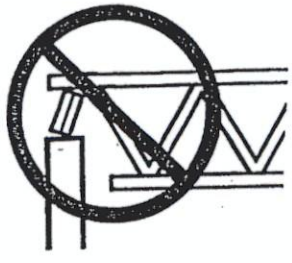

Do not install trusses on temporarily connected supports

Do not walk on unbraced trusses

Do not walk on trusses or gable ends lying flat

Nails in withdrawal (parallel to force)

All anchors, hangers, tie-downs, seats, bearing ledgers, etc., that are part of the supporting structure shall be accurately and properly placed and permanently attached before truss installation begins. No trusses shall ever be installed on anchors or ties that have temporary connections to the supporting structure.

Nailing scabs to the end of the building to brace the first truss is not recommended.
All nailing of bracing should be done so that nails are driven perpendicular to the direction of force, as shown at right.

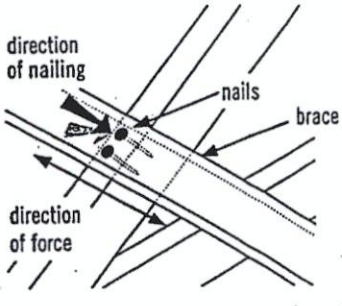

Well nailed (perpendicular to force)

7 Bracing Requirements for 3 Planes of Roof

Temporary erection bracing must be applied to three planes of the roof system to ensure stability: Plane 1) **Top Chord** (sheathing), Plane 2) **Bottom Chord** (ceiling plane), and Plane 3) **Web Member** plane or vertical plane perpendicular to trusses.

1) Top Chord Plane

Most important to the builder or erection contractor is bracing in the plane of the top chord. Truss top chords are susceptible to lateral buckling before they are braced or sheathed.

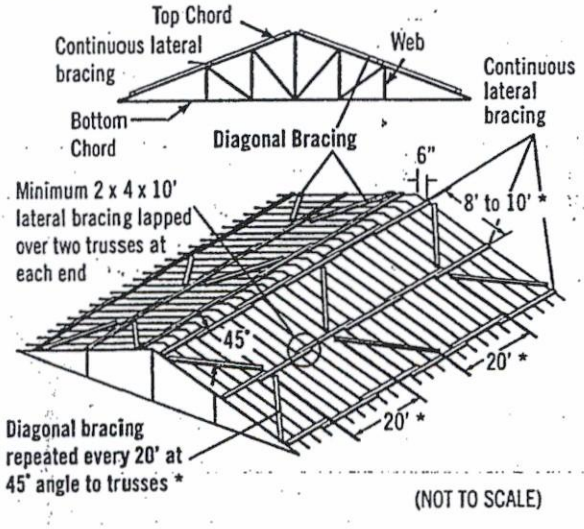

Exact spacing between trusses should be maintained as bracing is installed to avoid the hazardous practice of removing bracing to adjust spacing. This act of "adjusting spacing" can cause trusses to topple if connections are removed at the wrong time.

2) Bottom Chord Plane

In order to hold proper spacing on the bottom chord, temporary bracing is recommended on the top of the bottom chord.

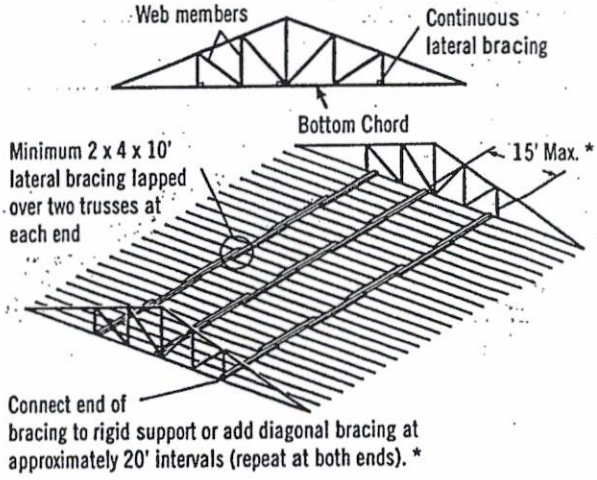

* Long spans, heavy loads or other spacing configurations may require closer spacing between lateral bracing and closer intervals between diagonals. Consult the building designer or HIB and DSB (*Recommended Design Specification for Temporary Bracing of Metal-Plate Connected Wood Trusses*) for details.

Diagonal or cross-bracing is very important!

3) Web Member Plane

"X" bracing, as shown, is critical in preventing trusses from leaning or dominoing. Repeat as shown to create a succession of rigid units.

X-bracing should be installed on vertical web members wherever possible, at or near lateral bracing. Plywood or OSB may be substituted for X-bracing.

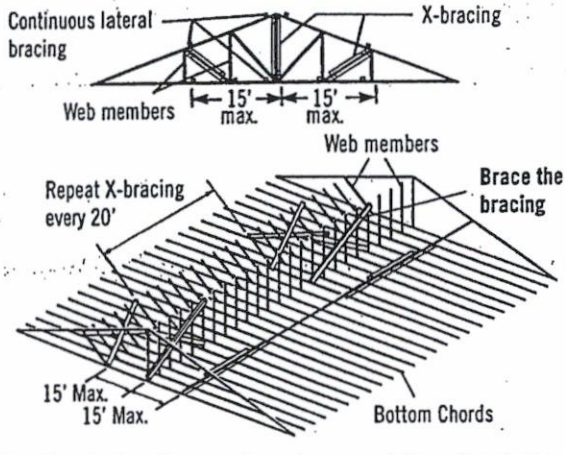

Note: Top chords and some web members are not shown, in order to make drawings more readable.

Do not use short blocks to brace individual trusses without a specific bracing plan detailing their use

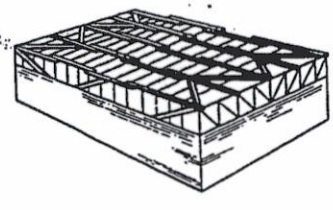

Bracing requirements using the same principles apply to parallel chord trusses

8 Stacking Materials

Do not proceed with building completion until all bracing is securely and properly in place

Never stack materials on unbraced or inadequately braced trusses

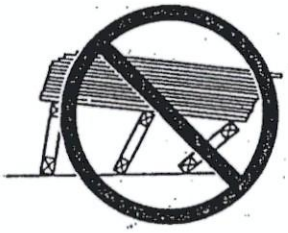

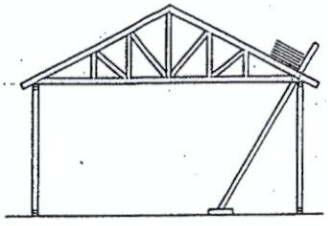

Proper distribution of construction materials is a must during construction.

Never stack materials near a peak

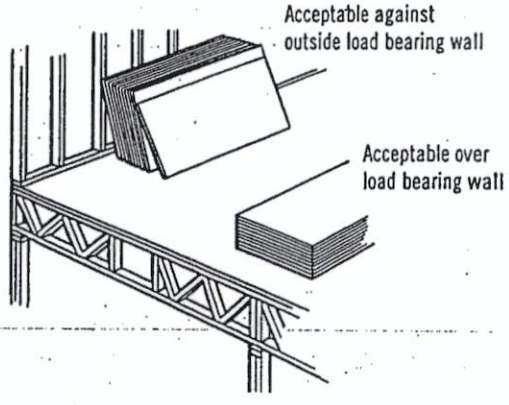

Never stack materials on the cantilever of a truss

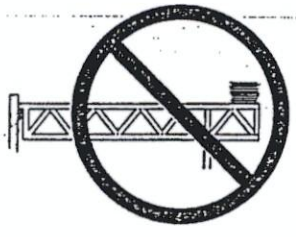

Always stack materials over two or more trusses.

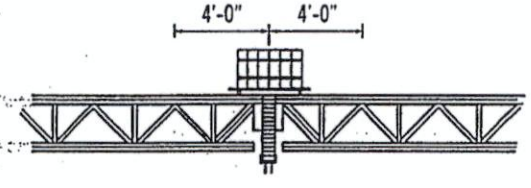

Single truss

Roofing and mechanical contractors are cautioned to stack materials only along outside supporting members or directly over inside supporting members. Trusses are not designed for dynamic loads (i.e., moving vehicles). Extreme care should be taken when loading and stacking construction materials (rolled roofing, mechanical equipment, etc.) on the roof or floor system.

Never overload small groups or single trusses. Position load over as many trusses as possible.

Never cut any structural member of a truss.

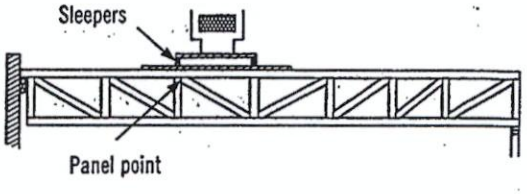

Sleepers for mechanical equipment should be located at panel points (joints) or over main supporting members, and only on trusses that have been designed for such loads.

Caution Notes

Errors in building lines and/or dimensions, or errors by others shall be corrected by the contractor or responsible construction trade subcontractor or supplier **before** erection of trusses begins.

Cutting of nonstructural overhangs is considered a part of normal erection and shall be done by the builder or erection contractor.

Any field modification that involves the cutting, drilling, or relocation of any structural truss member or connector plate shall not be done without the approval of the truss manufacturer or a licensed design professional.

The methods and procedures outlined are intended to ensure that the overall construction techniques employed will put floor and roof trusses **safely** in place in a completed structure. These recommendations for bracing wood trusses originate from the collective experience of leading technical personnel in the wood truss industry, but must, due to the nature of responsibilities involved, be presented only as a **guide** for use by a qualified building designer, builder, or erection contractor. Thus, the Wood Truss Council of America expressly disclaims any responsibility for damages arising from the use, application, or reliance on the recommendations and information contained herein.

[Selected text and figures referenced or reproduced from HIB and DSB by permission of the Truss Plate Institute, Madison, WI.]

THE CANADIAN WOOD TRUSS ASSOCIATION

L'ASSOCIATION CANADIENNE DES FABRICANTS DE FERMES DE BOIS

1400 Blair Place, Suite 210, Ottawa, ON K1J 9B8
Tel.: 613-747-5544 Fax: 613-747-6264

Wood Truss Council of America

One WTCA Center
6300 Enterprise Lane, Madison, WI 53719-1140
Tel.: 608-274-4849 Fax: 608-274-3329
wtca@woodtruss.com www.woodtruss.com

ALPA-BARRIE

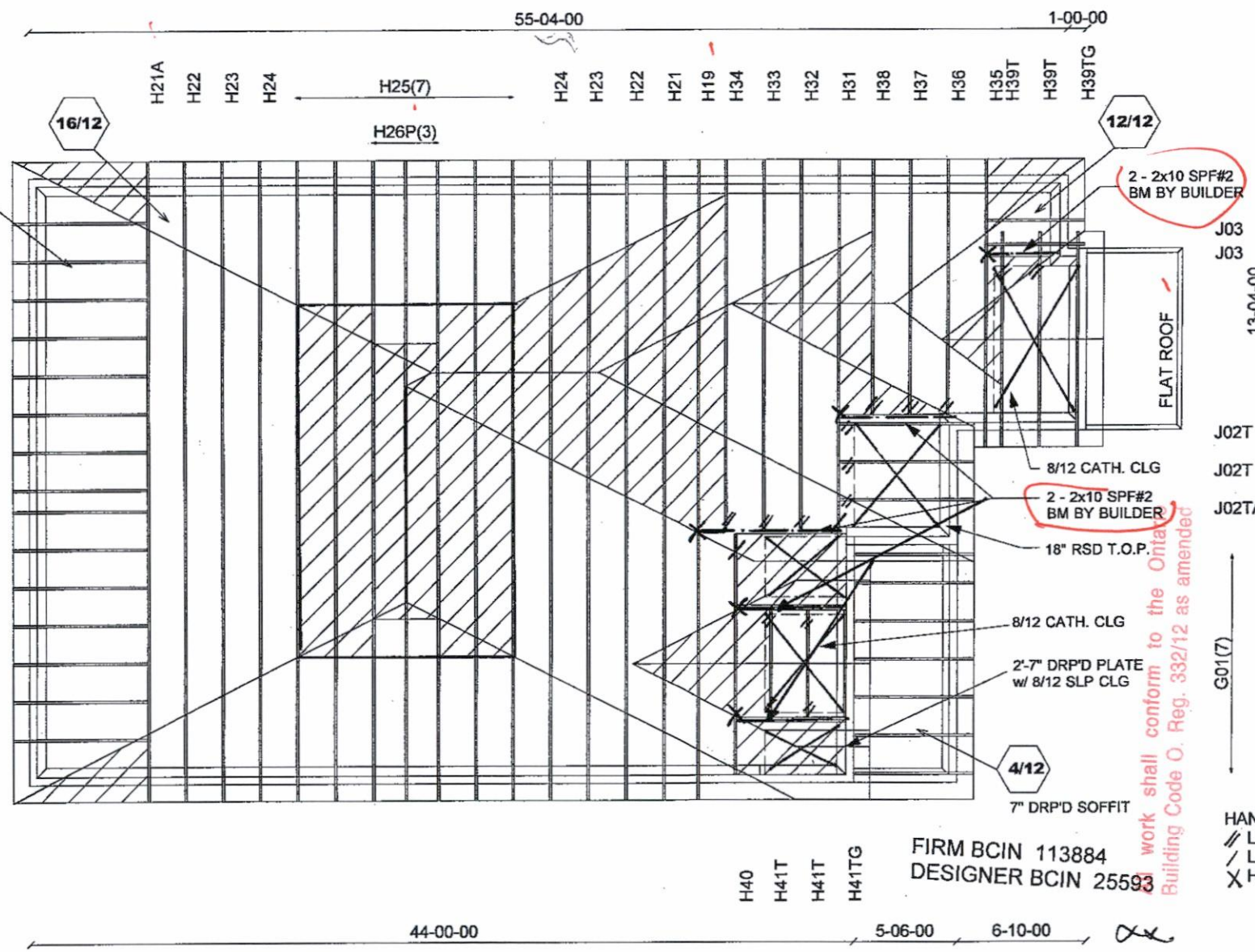

For conventional framing roof / cellings framing shall conform to OBC.9.23

CITY OF BRAMPTON BUILDING DIVISION REVIEWED DEC 11 2019 BY MARY FRENETTE

12" FIN. OH.
RSD. HEEL - 0" DROP
(2" x 6" FASCIA) - FM
ASPHALT SHINGLES
2" X 6" BRG/BRICK

PIGGYBACK TRS
PURLINS BY OTHERS

FIRM BCIN 113884
DESIGNER BCIN 25593

All work shall conform to the Ontario Building Code O. Reg. 332/12 as amended

HANGERS
// LUS24
/ LJS26DS
X HHUS26-2

E19112510–E19112535 THE COPLAND

ALL CONVENTIONAL FRAMING TO CONFORM WITH PART 9 O.B.C. LATEST EDITION. ROOF RAFTERS THAT CROSS OVER TRUSSES TO BE 2X4 SPF #2 @ 24" O.C WITH A VERT. POST TO THE TRUSS UNDERNEATH AT EACH CROSS POINT. VERT. POSTS LONGER THAN 6' TO HAVE LATERAL BRACING SO THAT THE DISTANCE BETWEEN END POINTS & BETWEEN ROWS OF BRACING DOES NOT EXCEED 6'

CONVENTIONAL FRAMING BY OTHERS

Mitek V. 8.2.0

Job Track: 39002	Builder / Location: GOLD PARK HOMES / BRAMPTON	Model / Elevation: 38-10 / B	
Layout ID: 313991	Project: MCLAUGHLIN AND MAYFIELD	THESE DRAWINGS CONSTITUTE THE PROPERTY OF ALPA ROOF TRUSSES INC., SHALL NOT BE REPRODUCED, PUBLISHED, OR REDISTRIBUTED IN ANY MANNER OR UTILIZED FOR ANY PURPOSE OTHER THAN THE MANUFACTURE OF TRUSSES BY ALPA ROOF TRUSSES INC AND WILL BE RETRACTED BY ALPA ROOF TRUSSES INC IF UTLILZED FOR ANY OTHER PURPOSE.	
Plan Log: 104423	Date: 10/22/2019 Designer: AMANDA		

EWP DESIGN INC.

(905) 832-2250 FAX (905) 832-0286

RESPONSIBILITIES AND SPECIFICATIONS

RESPONSIBILITIES

1. EWP DESIGN INC. is responsible for the design of trusses as individual components.
2. It is the responsibility of others to ascertain that the design loads utilized on each drawing meet or exceed the actual dead load imposed by the structure, the live load imposed by the intended use and the snow load imposed by local building code or authorities with jurisdictions.
3. All dimensions are to be verified by the owner, contractor, architect or other authorities with jurisdictions before truss fabrication.
4. EWP DESIGN INC. bears no responsibility for the erection of trusses. Persons erecting trusses are cautioned to seek professional advice regarding the temporary and permanent bracing for the system. Bracing shown on EWP DESIGN INC. drawing is specified for the truss as a component only and forms an integral part of the truss design.
5. It is the truss manufacturer's responsibility to ensure that trusses are manufactured in conformance with specifications of EWP DESIGN INC. as outlined below.

SPECIFICATIONS

1. Trusses designed by EWP DESIGN INC. conform to the relevant section of the Ontario Building Code of Canada (Part 9 or Part 4) or to the Canadian code for farm buildings, whichever applies to the building type, as indicated on the EWP DESIGN INC. drawings, and conform to the design procedures established by the Truss Plate Institute of Canada. Unit stresses used for truss designs are as per the edition of CSA-O86 shown on EWP DESIGN INC. drawings.
2. Lumber is to be the size, species and grade as specified on EWP DESIGN INC. drawings.
3. Moisture content of lumber shall not exceed 19% in service unless specified otherwise.
4. Metal connector plates shall be applied to both faces of truss at each joint and shall be positioned as specified.
5. Top chords of trusses are assumed to be continuously braced laterally by roof sheathing or by purlins at intervals not exceeding 12.5 times the thickness of top chord member.
6. Bottom chords shall be laterally braced at intervals not exceeding 3M (10') o.c., where rigid ceiling is not applied directly to the underside of chords.

THESE DRAWINGS CONSTITUTE THE PROPERTY OF EWP DESIGN INC., SHALL NOT BE REPRODUCED, PUBLISHED, OR REDISTRIBUTED IN ANY MANNER OR UTILIZED FOR ANY PURPOSE OTHER THAN THE MANUFACTURE OF TRUSSES BY THE ALPA LUMBER GROUP, AND WILL BE RETRACTED BY EWP DESIGN INC. IF UTILIZED FOR ANY OTHER PURPOSE.

JOB NAME	TRUSS NAME	QUANTITY	PLY	JOB DESC.	DRWG NO.
313991	G01		1	TRUSS DESC. JT-39002	E-19112510

Alpa Roof Truss, Maple

Version 8.300 S Aug 9 2019 MiTek Industries, Inc. Fri Nov 8 13:10:57 2019 Page 1
ID:VRLqmcIDiflZCj2mk6F92VyQuye-YOE2sowWT_NEpqbd9pVyA92UcUDU44d0PKJ?IYyLFHC

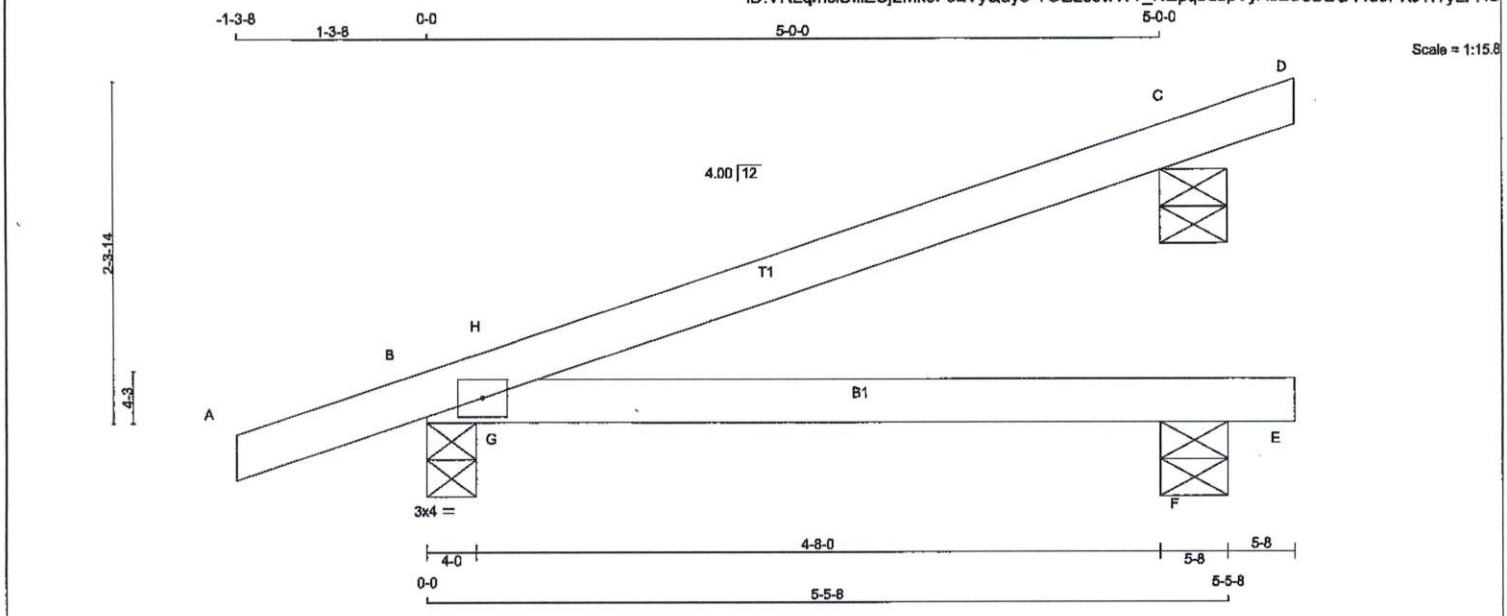

TOTAL WEIGHT = 7 X 16 = 109 lb

LUMBER
N. L. G. A. RULES

CHORDS	SIZE		LUMBER	DESCR.
A - D	2x4	DRY	No.2	SPF
B - E	2x4	DRY	No.2	SPF

DRY: SEASONED LUMBER.

PLATES (table is in inches)

JT	TYPE	PLATES	W	LEN	Y	X
B	TMB1-I	MT20	3.0	4.0		

NOTE: Lateral brace(s) shown shall be 2x4 SPF #2

LICENSED PROFESSIONAL ENGINEER
11/08/2019
R. TURENNE
100157040
PROVINCE OF ONTARIO

DIMENSIONS, SUPPORTS AND LOADINGS SPECIFIED BY FABRICATOR TO BE VERIFIED BY BUILDING DESIGNER

BEARINGS

JT	FACTORED GROSS REACTION VERT	HORZ	MAXIMUM FACTORED GROSS REACTION DOWN	HORZ	UPLIFT	INPUT BRG IN-SX	REQRD BRG IN-SX
B	384	0	384	0	0	4-0	1-8
F	89	0	89	0	0	5-8	1-8
C	256	0	256	0	0	5-8	5-8

BEVELED PLATE OR SHIM REQUIRED TO PROVIDE FULL BEARING SURFACE WITH TRUSS CHORD AT JT(S): C

UNFACTORED REACTIONS

JT	1ST LCASE COMBINED	MAX./MIN. COMPONENT REACTIONS SNOW	LIVE	PERM.LIVE	WIND	DEAD	SOIL
B	270	184 / 0	0 / 0	0 / 0	0 / 0	86 / 0	0 / 0
F	67	19 / 0	0 / 0	0 / 0	0 / 0	48 / 0	0 / 0
C	178	137 / 0	0 / 0	0 / 0	0 / 0	41 / 0	0 / 0

BEARING MATERIAL TO BE SPF NO.2 OR BETTER AT JOINT(S) B, F, C

BRACING
TOP CHORD TO BE SHEATHED OR MAX. PURLIN SPACING = 6.25 FT.
MAX. UNBRACED BOTTOM CHORD LENGTH = 10.00 FT OR RIGID CEILING DIRECTLY APPLIED.

ALL PITCH BREAKS AND PERIMETER CORNER JOINTS MUST BE LATERALLY RESTRAINED.

LOADING
TOTAL LOAD CASES: (4)

CHORDS

MEMB. FR-TO	MAX. FACTORED FORCE (LBS)	FACTORED VERT. LOAD LC1 (PLF) FROM	TO	MAX CSI (LC)	MAX. UNBRAC LENGTH
A- B	0 / 16	-84.9	-84.9	0.11 (1)	10.00
B- H	-19 / 12	-84.9	-84.9	0.06 (4)	6.25
H- C	-1 / 2	-84.9	-84.9	0.30 (1)	10.00
C- D	-10 / 0	-84.9	-84.9	0.03 (1)	10.00
B- G	0 / 0	-18.5	-18.5	0.21 (1)	10.00
G- F	0 / 0	-18.5	-18.5	0.21 (1)	10.00
F- E	0 / 0	-18.5	-18.5	0.01 (4)	10.00

WEBS

MEMB. FR-TO	MAX. FACTORED FORCE (LBS)	MAX CSI (LC)
G- H	-257 / 11	0.00 (1)

[M]

DESIGN CRITERIA

SPECIFIED LOADS:

TOP CH.	LL =	23.3	PSF
	DL =	6.0	PSF
BOT CH.	LL =	0.0	PSF
	DL =	7.4	PSF
TOTAL LOAD	=	36.7	PSF

SPACING = 24.0 IN. C/C

THIS TRUSS IS DESIGNED FOR RESIDENTIAL OR SMALL BUILDING REQUIREMENTS OF PART 9, NBCC 2010

THIS DESIGN COMPLIES WITH:
- PART 9 OF OBC 2012 , BCBC 2012 , ABC 2014
- CSA 086-09
- TPIC 2011

(55 % OF 27.2 P.S.F. G.S.L. PLUS 8.4 P.S.F. RAIN LOAD) EQUALS 23.3 P.S.F. SPECIFIED ROOF LIVE LOAD

ALLOWABLE DEFL.(LL)= L/360 (0.19")
CALCULATED VERT. DEFL.(LL) = L/ 999 (0.04")
ALLOWABLE DEFL.(TL)= L/360 (0.19")
CALCULATED VERT. DEFL.(TL) = L/ 736 (0.09")

CANTILEVER DEFLECTION:
ALLOWABLE DEFL.(TL)= L/120 (0.19")
CALCULATED VERT. DEFL.(TL) = L/ 999 (0.00")

CSI: TC=0.30/1.00 (C-H:1) , BC=0.21/1.00 (F-G:1) , WB=0.00/1.00 (G-H:1) , SSI=0.22/1.00 (B-G:1)

DOL LUMBER=1.00 NAIL=1.00 LS BEND=1.10 COMP=1.10 SHEAR=1.10 TENS= 1.10

COMPANION LIVE LOAD FACTOR = 0.50

TRUSS PLATE MANUFACTURER IS NOT RESPONSIBLE FOR QUALITY CONTROL IN THE TRUSS MANUFACTURING PLANT .

NAIL VALUES

PLATE	GRIP(DRY) (PSI) MAX	MIN	SHEAR (PLI) MAX	MIN	SECTION (PLI) MAX	MIN
MT20	618	354	1667	788	1987	1656

PLATE PLACEMENT TOL. = 0.250 inches

PLATE ROTATION TOL. = 5.0 Deg.

JSI GRIP= 0.25 (B) (INPUT = 0.90)
JSI METAL= 0.07 (B) (INPUT = 1.00)

JOB NAME	TRUSS NAME	QUANTITY	PLY	JOB DESC.	DRWG NO.
313991	H19		1	TRUSS DESC. JT-39002	E-19112511

Alpa Roof Truss, Maple

ID:VRLqmclDifiZCj2mk6F92VyQuye-mV6uL?oANPgQ9Y_ICnK8vYhVO?M1nn5K0MlaXRyLFIf

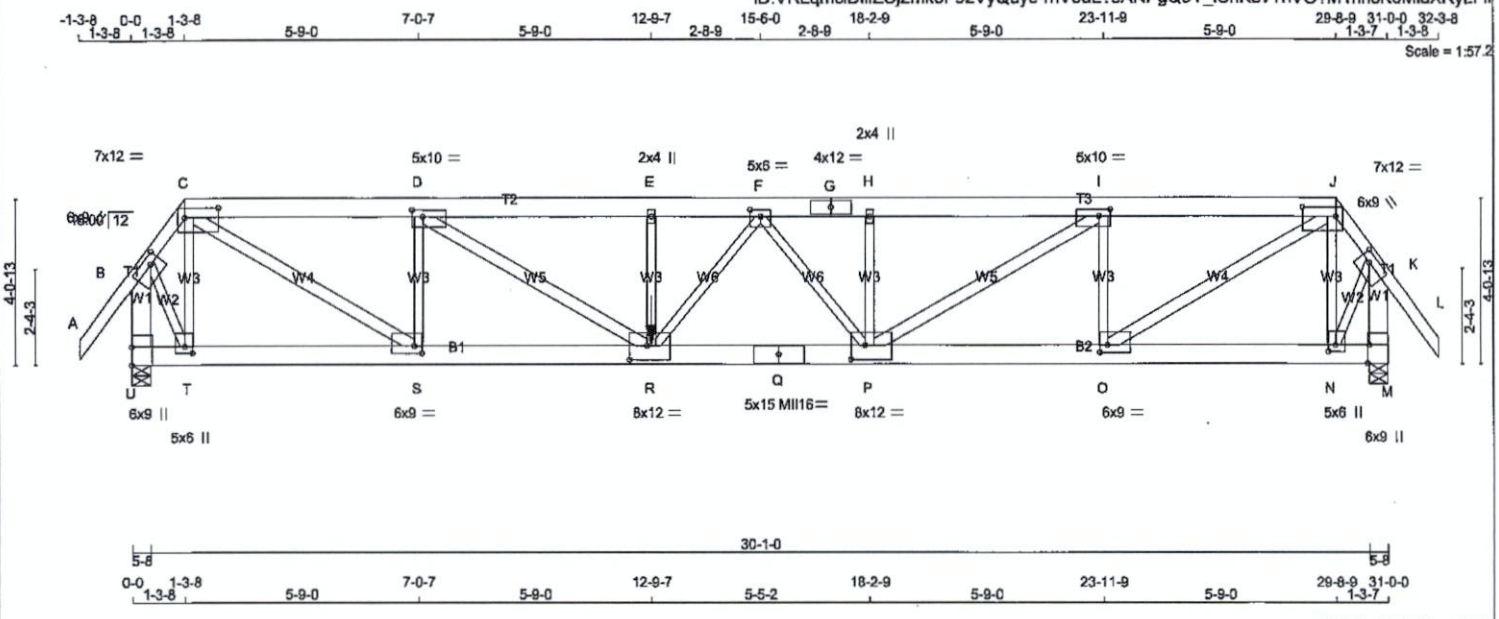

TOTAL WEIGHT = 179 lb [M]

LUMBER

N. L. G. A. RULES

CHORDS	SIZE		LUMBER	DESCR.
A - C	2x4	DRY	No.2	SPF
C - G	2x6	DRY	1650F 1.5E	SPF
G - J	2x6	DRY	1650F 1.5E	SPF
J - L	2x4	DRY	No.2	SPF
U - B	2x6	DRY	No.2	SPF
M - K	2x6	DRY	No.2	SPF
U - Q	2x6	DRY	2100F 1.8E	SPF
Q - M	2x6	DRY	2100F 1.8E	SPF
ALL WEBS	2x3	DRY	No.2	SPF
EXCEPT				
C - S	2x4	DRY	1650F 1.5E	SPF
D - R	2x4	DRY	No.2	SPF
P - I	2x4	DRY	No.2	SPF
O - J	2x4	DRY	1650F 1.5E	SPF

DRY: SEASONED LUMBER.

PLATES (table is in inches)

JT	TYPE	PLATES	W	LEN	Y	X
B	TMVW-t	MT20	6.0	9.0	2.25	3.00
C	TTWW-l	MT20	7.0	12.0	2.75	10.00
D	TMWW-t	MT20	5.0	10.0	2.00	3.25
E	TMW+w	MT20	2.0	4.0		
F	TMWW-t	MT20	5.0	6.0	2.00	3.00
G	TS-t	MT20	4.0	12.0		
H	TMW+w	MT20	2.0	4.0		
I	TMWW-t	MT20	5.0	10.0	2.00	3.25
J	TTWW-l	MT20	7.0	12.0	2.75	10.00
K	TMVW-t	MT20	6.0	9.0	2.25	3.00
M	BMV1+t	MT20	6.0	9.0	Edge	0.50
N	BMWW+t	MT20	5.0	6.0	2.00	2.25
O	BMWW-t	MT20	6.0	9.0	2.25	2.25
P	BMWWW-t	MT20	8.0	12.0	4.25	4.25
Q	BS-t	MII16	5.0	15.0		
R	BMWWW-t	MT20	8.0	12.0	4.25	5.25
S	BMWW-t	MT20	6.0	9.0	2.25	2.25
T	BMWW+t	MT20	5.0	6.0	2.00	2.25
U	BMV1+t	MT20	6.0	9.0	5.50	

Edge - INDICATES REFERENCE CORNER OF PLATE TOUCHES EDGE OF CHORD.

NOTE: Lateral brace(s) shown shall be 2x4 SPF #2

LICENSED PROFESSIONAL ENGINEER
11/08/2019
R. TURENNE
100157040
PROVINCE OF ONTARIO

DIMENSIONS, SUPPORTS AND LOADINGS SPECIFIED BY FABRICATOR TO BE VERIFIED BY BUILDING DESIGNER

BEARINGS

JT	FACTORED GROSS REACTION VERT	HORZ	MAXIMUM FACTORED GROSS REACTION DOWN	HORZ	UPLIFT	INPUT BRG IN-SX	REQRD BRG IN-SX
U	4266	0	4266	0	0	5-8	5-8
M	3508	0	3508	0	0	5-8	3-13

UNFACTORED REACTIONS

MAX./MIN. COMPONENT REACTIONS

JT	1ST LCASE COMBINED	SNOW	LIVE	PERM.LIVE	WIND	DEAD	SOIL
U	3026	1934 / 0	0 / 0	0 / 0	0 / 0	1092 / 0	0 / 0
M	2488	1592 / 0	0 / 0	0 / 0	0 / 0	895 / 0	0 / 0

BEARING MATERIAL TO BE SPF NO.2 OR BETTER AT JOINT(S) U, M

BEARING SIZE FACTOR = 1.15 AT JNT(S) U, M (BASED ON SUPPORT DEPTH = 1-8)

BRACING

TOP CHORD TO BE SHEATHED OR MAX. PURLIN SPACING = 2.55 FT.

MAX. UNBRACED BOTTOM CHORD LENGTH = 10.00 FT OR RIGID CEILING DIRECTLY APPLIED.

ALL PITCH BREAKS AND PERIMETER CORNER JOINTS MUST BE LATERALLY RESTRAINED.

LOADING

TOTAL LOAD CASES: (4)

CHORDS

MEMB. FR-TO	MAX. FACTORED FORCE (LBS)	FACTORED VERT. LOAD (PLF) FROM	TO	LC1	MAX CSI (LC)	MAX. UNBRAC LENGTH
A- B	0 / 48	-84.9	-84.9	0.13 (1)	10.00	
B- C	-2536 / 0	-84.9	-84.9	0.21 (1)	4.03	
C- D	-7420 / 0	-84.9	-84.9	0.32 (1)	3.55	
D- E	-12180 / 0	-84.9	-84.9	0.67 (1)	2.55	
E- F	-12180 / 0	-84.9	-84.9	0.51 (1)	2.64	
F- G	-9622 / 0	-84.9	-84.9	0.29 (1)	3.17	
G- H	-9622 / 0	-84.9	-84.9	0.29 (1)	3.17	
H- I	-9622 / 0	-84.9	-84.9	0.42 (1)	3.08	
I- J	-5925 / 0	-84.9	-84.9	0.24 (1)	3.97	
J- K	-2158 / 0	-84.9	-84.9	0.19 (1)	4.43	
K- L	0 / 48	-84.9	-84.9	0.13 (1)	10.00	
U- B	-4392 / 0	0.0	0.0	0.39 (1)	5.09	
M- K	-3623 / 0	0.0	0.0	0.32 (1)	5.56	
U- T	0 / 0	-18.5	-18.5	0.08 (1)	10.00	
T- S	0 / 1493	-18.5	-18.5	0.16 (1)	10.00	
S- R	0 / 7420	-18.5	-18.5	0.52 (1)	10.00	
R- Q	0 / 11013	-18.5	-18.5	0.71 (1)	10.00	
Q- P	0 / 11013	-18.5	-18.5	0.71 (1)	10.00	
P- O	0 / 5925	-18.5	-18.5	0.36 (1)	10.00	
O- N	0 / 1218	-18.5	-18.5	0.14 (1)	10.00	
N- M	0 / 0	-18.5	-18.5	0.07 (1)	10.00	

WEBS

MEMB. FR-TO	MAX. FACTORED FORCE (LBS)	MAX CSI (LC)
T- C	-1841 / 0	0.44 (1)
C- S	0 / 6985	0.90 (1)
S- D	-3594 / 0	0.85 (1)
D- R	0 / 5620	0.99 (1)
R- E	-207 / 0	0.05 (1)
R- F	0 / 1942	0.48 (1)
F- P	-2315 / 0	0.78 (1)
P- H	-321 / 0	0.08 (1)
P- I	0 / 4366	0.77 (1)
O- I	-2885 / 0	0.68 (1)
O- J	0 / 5555	0.71 (1)
N- J	-1463 / 0	0.35 (1)
B- T	0 / 2594	0.64 (1)
N- K	0 / 2114	0.52 (1)

FACTORED CONCENTRATED LOADS (LBS)

JT	LOC.	LC1	MAX-	MAX+	FACE	DIR.	TYPE	HEEL	CONN.
R	12-9-7	-4330	-4330	—	FRONT	VERT	TOTAL	—	C1

CONNECTION REQUIREMENTS

1) **C1:** A SUITABLE HANGER/MECHANICAL CONNECTION IS REQUIRED.

DESIGN CRITERIA

*** SPECIAL LOADS ANALYSIS ***
GEOMETRY AND/OR BASIC LOADS CHANGED BY USER.
LOADS WERE DERIVED FROM USER INPUT
NO FURTHER MODIFICATIONS WERE MADE

SPECIFIED LOADS:

TOP	CH.	LL	=	23.3	PSF
		DL	=	6.0	PSF
BOT	CH.	LL	=	0.0	PSF
		DL	=	7.4	PSF
TOTAL	LOAD		=	36.7	PSF

SPACING = 24.0 IN. C/C

LOADING IN FLAT SECTION BASED ON A SLOPE OF 2.00/12 MINIMUM

*** NON STANDARD GIRDER ***
ADDT'L USER-DEFINED LOADS APPLIED TO ALL LOAD CASES.

THIS TRUSS IS DESIGNED FOR RESIDENTIAL OR SMALL BUILDING REQUIREMENTS OF PART 9, NBCC 2010

THIS DESIGN COMPLIES WITH:
- PART 9 OF OBC 2012 , BCBC 2012 , ABC 2014
- CSA 086-09
- TPIC 2011

DESIGN ASSUMPTIONS
-OVERHANG NOT TO BE ALTERED OR CUT OFF.

(55 % OF 27.2 P.S.F. G.S.L. PLUS 8.4 P.S.F. RAIN LOAD) EQUALS 23.3 P.S.F. SPECIFIED ROOF LIVE LOAD

ALLOWABLE DEFL.(LL)= L/360 (1.03")
CALCULATED VERT. DEFL.(LL) = L/ 943 (0.39")
ALLOWABLE DEFL.(TL)= L/360 (1.03")
CALCULATED VERT. DEFL.(TL) = L/ 494 (0.75")

CSI: TC=0.67/1.00 (D-E:1) , BC=0.71/1.00 (P-R:1) , WB=0.99/1.00 (D-R:1) , SSI=0.22/1.00 (D-E:1)

DOL LUMBER=1.00 NAIL=1.00 LS BEND=1.00 COMP=1.00 SHEAR=1.00 TENS= 1.00

COMPANION LIVE LOAD FACTOR = 0.50

AUTOSOLVE HEELS OFF

TRUSS PLATE MANUFACTURER IS NOT RESPONSIBLE FOR QUALITY CONTROL IN THE TRUSS MANUFACTURING PLANT .

NAIL VALUES

PLATE	GRIP(DRY) (PSI) MAX	MIN	SHEAR (PLI) MAX	MIN	SECTION (PLI) MAX	MIN
MT20	618	354	1667	788	1987	1656
MII16	438	276	2341	1245	4283	1656

CONTINUED ON PAGE 2

JOB NAME	TRUSS NAME	QUANTITY	PLY	JOB DESC.	DRWG NO.
313991	H21		1	TRUSS DESC. JT-39002	E-19112512

Alpa Roof Truss, Maple

Version 8.300 S Aug 9 2019 MiTek Industries, Inc. Fri Nov 8 13:09:48 2019 Page 1

ID:VRLqmclDiflZCj2mk6F92VyQuye-36ZzNC4Ejnh01EpMcqlmtchhegb9PmTsX56rN2yLFIH

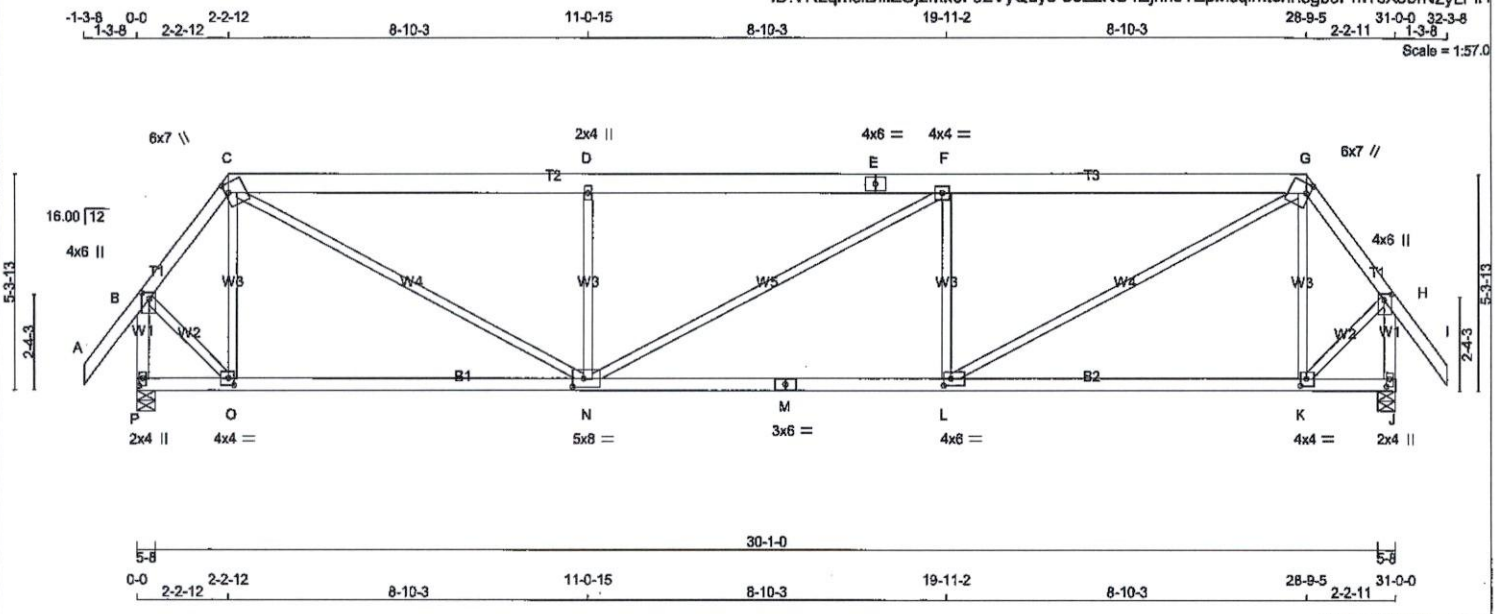

TOTAL WEIGHT = 145 lb [M]

LUMBER

N. L. G. A. RULES

CHORDS	SIZE		LUMBER	DESCR.
A - C	2x4	DRY	No.2	SPF
C - E	2x6	DRY	1650F 1.5E	SPF
E - G	2x6	DRY	1650F 1.5E	SPF
G - I	2x4	DRY	No.2	SPF
P - B	2x4	DRY	No.2	SPF
J - H	2x4	DRY	No.2	SPF
P - M	2x4	DRY	No.2	SPF
M - J	2x4	DRY	No.2	SPF
ALL WEBS EXCEPT	2x3	DRY	No.2	SPF

DRY: SEASONED LUMBER.

PLATES (table is in inches)

JT	TYPE	PLATES	W	LEN	Y	X
B	TMVW+p	MT20	4.0	6.0	1.75	2.25
C	TTWW+m	MT20	6.0	7.0	2.75	1.00
D	TMW+w	MT20	2.0	4.0		
E	TS-t	MT20	4.0	6.0		
F	TMWW-t	MT20	4.0	4.0		
G	TTWW+m	MT20	6.0	7.0	2.75	1.00
H	TMVW+p	MT20	4.0	6.0	1.75	2.25
J	BMV1+p	MT20	2.0	4.0	2.25	1.00
K	BMWW-t	MT20	4.0	4.0	2.00	1.75
L	BMWW-t	MT20	4.0	6.0	2.00	2.00
M	BS-t	MT20	3.0	6.0		
N	BMWWW-t	MT20	5.0	8.0	2.50	3.25
O	BMWW-t	MT20	4.0	4.0	2.00	1.75
P	BMV1+p	MT20	2.0	4.0	2.25	1.00

NOTE: Lateral brace(s) shown shall be 2x4 SPF #2

LICENSED PROFESSIONAL ENGINEER
11/08/2019
R. TURENNE
100157040
PROVINCE OF ONTARIO

DIMENSIONS, SUPPORTS AND LOADINGS SPECIFIED BY FABRICATOR TO BE VERIFIED BY BUILDING DESIGNER

BEARINGS

JT	FACTORED GROSS REACTION VERT	HORZ	MAXIMUM FACTORED GROSS REACTION DOWN	HORZ	UPLIFT	INPUT BRG IN-SX	REQRD BRG IN-SX
P	1722	0	1722	0	0	5-8	2-9
J	1722	0	1722	0	0	5-8	2-9

UNFACTORED REACTIONS

JT	1ST LCASE COMBINED	MAX./MIN. COMPONENT REACTIONS SNOW	LIVE	PERM.LIVE	WIND	DEAD	SOIL
P	1220	787 / 0	0 / 0	0 / 0	0 / 0	432 / 0	0 / 0
J	1220	787 / 0	0 / 0	0 / 0	0 / 0	432 / 0	0 / 0

BEARING MATERIAL TO BE SPF NO.2 OR BETTER AT JOINT(S) P, J

BRACING

TOP CHORD TO BE SHEATHED OR MAX. PURLIN SPACING = 5.51 FT.
MAX. UNBRACED BOTTOM CHORD LENGTH = 10.00 FT OR RIGID CEILING DIRECTLY APPLIED.

ALL PITCH BREAKS AND PERIMETER CORNER JOINTS MUST BE LATERALLY RESTRAINED.

LOADING

TOTAL LOAD CASES: (4)

CHORDS

MEMB. FR-TO	MAX. FACTORED FORCE (LBS)	FACTORED VERT. LOAD LC1 (PLF) FROM	TO	MAX CSI (LC)	MAX. UNBRAC LENGTH
A- B	0 / 48	-84.9	-84.9	0.12 (1)	10.00
B- C	-1173 / 0	-84.9	-84.9	0.09 (1)	5.80
C- D	-2453 / 0	-84.9	-84.9	0.33 (1)	5.51
D- E	-2453 / 0	-84.9	-84.9	0.33 (1)	5.51
E- F	-2453 / 0	-84.9	-84.9	0.33 (1)	5.51
F- G	-2453 / 0	-84.9	-84.9	0.32 (1)	5.52
G- H	-1174 / 0	-84.9	-84.9	0.09 (1)	5.80
H- I	0 / 48	-84.9	-84.9	0.12 (1)	10.00
P- B	-1745 / 0	0.0	0.0	0.22 (1)	6.31
J- H	-1745 / 0	0.0	0.0	0.22 (1)	6.31
P- O	0 / 0	-18.5	-18.5	0.22 (4)	10.00
O- N	0 / 694	-18.5	-18.5	0.35 (4)	10.00
N- M	0 / 2453	-18.5	-18.5	0.54 (1)	10.00
M- L	0 / 2453	-18.5	-18.5	0.54 (1)	10.00
L- K	0 / 694	-18.5	-18.5	0.35 (4)	10.00
K- J	0 / 0	-18.5	-18.5	0.23 (4)	10.00

WEBS

MEMB. FR-TO	MAX. FACTORED FORCE (LBS)	MAX CSI (LC)
O- C	-445 / 0	0.17 (1)
C- N	0 / 2015	0.45 (1)
N- D	-819 / 0	0.32 (1)
N- F	0 / 1	0.00 (1)
L- F	-818 / 0	0.32 (1)
L- G	0 / 2014	0.45 (1)
K- G	-445 / 0	0.17 (1)
B- O	0 / 919	0.21 (1)
K- H	0 / 919	0.21 (1)

DESIGN CRITERIA

SPECIFIED LOADS:

TOP CH.	LL	=	23.3	PSF
	DL	=	6.0	PSF
BOT CH.	LL	=	0.0	PSF
	DL	=	7.4	PSF
TOTAL LOAD		=	36.7	PSF

SPACING = 24.0 IN. C/C

LOADING IN FLAT SECTION BASED ON A SLOPE OF 2.00/12 MINIMUM

THIS TRUSS IS DESIGNED FOR RESIDENTIAL OR SMALL BUILDING REQUIREMENTS OF PART 9, NBCC 2010

THIS DESIGN COMPLIES WITH:
- PART 9 OF OBC 2012 , BCBC 2012 , ABC 2014
- CSA 086-09
- TPIC 2011

(55 % OF 27.2 P.S.F. G.S.L. PLUS 8.4 P.S.F. RAIN LOAD) EQUALS 23.3 P.S.F. SPECIFIED ROOF LIVE LOAD

ALLOWABLE DEFL.(LL)= L/360 (1.03")
CALCULATED VERT. DEFL.(LL) = L/ 999 (0.12")
ALLOWABLE DEFL.(TL)= L/360 (1.03")
CALCULATED VERT. DEFL.(TL) = L/ 999 (0.28")

CSI: TC=0.33/1.00 (D-F:1) , BC=0.54/1.00 (L-N:1) , WB=0.45/1.00 (C-N:1) , SSI=0.27/1.00 (C-D:1)

DOL LUMBER=1.00 NAIL=1.00 LS BEND=1.10 COMP=1.10 SHEAR=1.10 TENS= 1.10

COMPANION LIVE LOAD FACTOR = 0.50

TRUSS PLATE MANUFACTURER IS NOT RESPONSIBLE FOR QUALITY CONTROL IN THE TRUSS MANUFACTURING PLANT .

NAIL VALUES

PLATE	GRIP(DRY) (PSI) MAX	MIN	SHEAR (PLI) MAX	MIN	SECTION (PLI) MAX	MIN
MT20	618	354	1667	788	1987	1656

PLATE PLACEMENT TOL. = 0.250 inches

PLATE ROTATION TOL. = 5.0 Deg.

JSI GRIP= 0.89 (N) (INPUT = 0.90)
JSI METAL= 0.87 (M) (INPUT = 1.00)

JOB NAME	TRUSS NAME	QUANTITY	PLY	JOB DESC.	DRWG NO.
313991	H21A		1	TRUSS DESC. JT-39002	E-19112513

Alpa Roof Truss, Maple

Version 8.300 S Aug 9 2019 MiTek Industries, Inc. Fri Nov 8 12:52:17 2019 Page 1

ID:VRLqmcIDiflZCj2mk6F92VyQuye-LwZeoqMzEsH8RjzMYbPInzfzB0omfNOAs40j_TyLFY

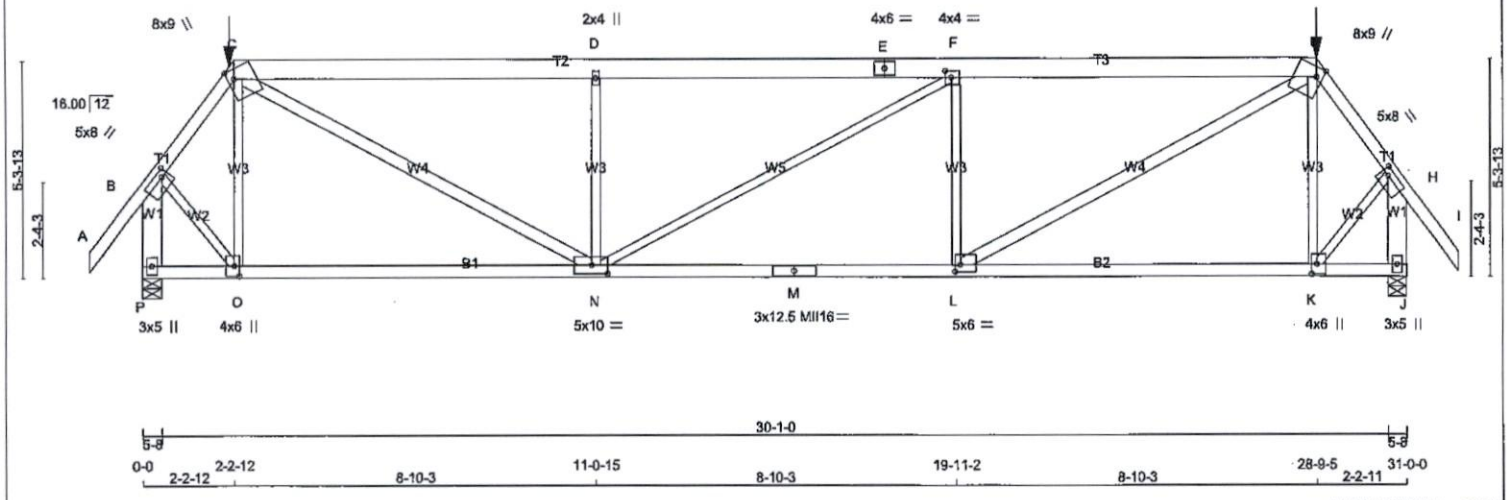

TOTAL WEIGHT = 155 lb [M]

LUMBER

N. L. G. A. RULES

CHORDS	SIZE		LUMBER	DESCR.
A - C	2x4	DRY	No.2	SPF
C - E	2x6	DRY	1650F 1.5E	SPF
E - G	2x6	DRY	1650F 1.5E	SPF
G - I	2x4	DRY	No.2	SPF
P - B	2x6	DRY	No.2	SPF
J - H	2x6	DRY	No.2	SPF
P - M	2x4	DRY	1650F 1.5E	SPF
M - J	2x4	DRY	1650F 1.5E	SPF
ALL WEBS	2x3	DRY	No.2	SPF
EXCEPT				
C - N	2x4	DRY	No.2	SPF
L - G	2x4	DRY	No.2	SPF

DRY: SEASONED LUMBER.

PLATES (table is in inches)

JT	TYPE	PLATES	W	LEN	Y	X
B	TMVW-t	MT20	5.0	8.0	1.75	2.00
C	TTWW+m	MT20	8.0	9.0	2.75	1.75
D	TMW+w	MT20	2.0	4.0		
E	TS-t	MT20	4.0	6.0		
F	TMWW-t	MT20	4.0	4.0	2.00	1.75
G	TTWW+m	MT20	8.0	9.0	2.75	1.75
H	TMVW-t	MT20	5.0	8.0	1.75	2.00
J	BMV1+p	MT20	3.0	5.0		
K	BMWW+t	MT20	4.0	6.0	3.00	1.50
L	BMWW-t	MT20	5.0	6.0	2.00	1.50
M	BS-t	MII16	3.0	12.5		
N	BMWWW-t	MT20	5.0	10.0	2.50	4.75
O	BMWW+t	MT20	4.0	6.0	3.00	1.50
P	BMV1+p	MT20	3.0	5.0		

NOTE: Lateral brace(s) shown shall be 2x4 SPF #2

LICENSED PROFESSIONAL ENGINEER
11/08/2019
R. TURENNE
100157040
PROVINCE OF ONTARIO

DIMENSIONS, SUPPORTS AND LOADINGS SPECIFIED BY FABRICATOR TO BE VERIFIED BY BUILDING DESIGNER

BEARINGS

JT	FACTORED GROSS REACTION VERT	HORZ	MAXIMUM FACTORED GROSS REACTION DOWN	HORZ	UPLIFT	INPUT BRG IN-SX	REQRD BRG IN-SX
P	3229	0	3229	0	0	5-8	5-0
J	3228	0	3228	0	0	5-8	5-0

UNFACTORED REACTIONS

JT	1ST LCASE COMBINED	MAX./MIN. COMPONENT REACTIONS SNOW	LIVE	PERM.LIVE	WIND	DEAD	SOIL
P	2290	1462 / 0	0 / 0	0 / 0	0 / 0	828 / 0	0 / 0
J	2290	1462 / 0	0 / 0	0 / 0	0 / 0	828 / 0	0 / 0

BEARING MATERIAL TO BE SPF NO.2 OR BETTER AT JOINT(S) P, J

BRACING

TOP CHORD TO BE SHEATHED OR MAX. PURLIN SPACING = 3.53 FT.
MAX. UNBRACED BOTTOM CHORD LENGTH = 10.00 FT OR RIGID CEILING DIRECTLY APPLIED.

ALL PITCH BREAKS AND PERIMETER CORNER JOINTS MUST BE LATERALLY RESTRAINED.

LOADING

TOTAL LOAD CASES: (4)

CHORDS

MEMB. FR-TO	MAX. FACTORED FORCE (LBS)	FACTORED VERT. LOAD LC1 FROM (PLF)	TO	MAX CSI (LC)	MAX. UNBRAC LENGTH
A- B	0 / 48	-84.9	-84.9	0.13 (1)	10.00
B- C	-2344 / 0	-84.9	-84.9	0.16 (1)	4.32
C- D	-4854 / 0	-167.1	-167.1	0.82 (1)	3.53
D- E	-4855 / 0	-167.1	-167.1	0.82 (1)	3.53
E- F	-4855 / 0	-167.1	-167.1	0.82 (1)	3.53
F- G	-4854 / 0	-167.1	-167.1	0.82 (1)	3.54
G- H	-2344 / 0	-84.9	-84.9	0.16 (1)	4.32
H- I	0 / 48	-84.9	-84.9	0.13 (1)	10.00
P- B	-3272 / 0	0.0	0.0	0.31 (1)	5.81
J- H	-3271 / 0	0.0	0.0	0.31 (1)	5.81
P- O	0 / 0	-36.4	-36.4	0.40 (4)	10.00
O- N	0 / 1385	-36.4	-36.4	0.62 (4)	10.00
N- M	0 / 4854	-36.4	-36.4	0.90 (1)	10.00
M- L	0 / 4854	-36.4	-36.4	0.90 (1)	10.00
L- K	0 / 1385	-36.4	-36.4	0.62 (4)	10.00
K- J	0 / 0	-36.4	-36.4	0.41 (4)	10.00

WEBS

MEMB. FR-TO	MAX. FACTORED FORCE (LBS)	MAX CSI (LC)
O- C	-896 / 0	0.36 (1)
C- N	0 / 3972	0.70 (1)
N- D	-1613 / 0	0.65 (1)
N- F	0 / 1	0.00 (4)
L- F	-1612 / 0	0.65 (1)
L- G	0 / 3972	0.70 (1)
K- G	-896 / 0	0.36 (1)
B- O	0 / 1835	0.45 (1)
K- H	0 / 1835	0.45 (1)

FACTORED CONCENTRATED LOADS (LBS)

JT	LOC.	LC1	MAX-	MAX+	FACE	DIR.	TYPE	HEEL	CONN.
C	2-2-12	-138	-138	—	FRONT	VERT	TOTAL	—	C1
G	28-9-5	-138	-138	—	FRONT	VERT	TOTAL	—	C1

CONNECTION REQUIREMENTS

1) C1: A SUITABLE HANGER/MECHANICAL CONNECTION IS REQUIRED.

DESIGN CRITERIA

SPECIFIED LOADS:

TOP CH.	LL	=	23.3	PSF
	DL	=	6.0	PSF
BOT CH.	LL	=	0.0	PSF
	DL	=	7.4	PSF
TOTAL LOAD		=	36.7	PSF

SPACING = 24.0 IN. C/C

LOADING IN FLAT SECTION BASED ON A SLOPE OF 2.00/12 MINIMUM

GIRDER TYPE: CPrimeHip
LEFT SETBACK = 2-2-12
RIGHT SETBACK = 2-2-11
END SETBACK = 5-10-8
END WALL WIDTH = 0-0
CORNER FRAMING TYPE: CONVENTIONAL
END JACK TYPE: CONVENTIONAL
APPLIED TO FRONT SIDE
- ADDT'L LOADS BASED ON 55 % OF GSL.

THIS TRUSS IS DESIGNED FOR RESIDENTIAL OR SMALL BUILDING REQUIREMENTS OF PART 9, NBCC 2010

THIS DESIGN COMPLIES WITH:
- PART 9 OF OBC 2012 , BCBC 2012 , ABC 2014
- CSA 086-09
- TPIC 2011

(55 % OF 27.2 P.S.F. G.S.L. PLUS 8.4 P.S.F. RAIN LOAD) EQUALS 23.3 P.S.F. SPECIFIED ROOF LIVE LOAD

ALLOWABLE DEFL.(LL)= L/360 (1.03")
CALCULATED VERT. DEFL.(LL) = L/ 999 (0.20")
ALLOWABLE DEFL.(TL)= L/360 (1.03")
CALCULATED VERT. DEFL.(TL) = L/ 792 (0.47")

CSI: TC=0.82/1.00 (D-F:1) , BC=0.90/1.00 (L-N:1) , WB=0.70/1.00 (C-N:1) , SSI=0.58/1.00 (C-D:1)

DOL LUMBER=1.00 NAIL=1.00 LS BEND=1.00 COMP=1.00 SHEAR=1.00 TENS= 1.00

COMPANION LIVE LOAD FACTOR = 0.50

AUTOSOLVE HEELS OFF

TRUSS PLATE MANUFACTURER IS NOT RESPONSIBLE FOR QUALITY CONTROL IN THE TRUSS MANUFACTURING PLANT .

NAIL VALUES

PLATE	GRIP(DRY) (PSI) MAX	MIN	SHEAR (PLI) MAX	MIN	SECTION (PLI) MAX	MIN
MT20	618	354	1667	788	1987	1656
MII16	438	276	2341	1245	4283	1656

PLATE PLACEMENT TOL. = 0.250 inches

PLATE ROTATION TOL. = 5.0 Deg.

JSI GRIP= 0.89 (N) (INPUT = 0.90)
JSI METAL= 0.87 (L) (INPUT = 1.00)

JOB NAME	TRUSS NAME	QUANTITY	PLY	JOB DESC.	DRWG NO.
313991	H22		1	TRUSS DESC. JT-39002	E-19112514

Alpa Roof Truss, Maple

Version 8.300 S Aug 9 2019 MiTek Industries, Inc. Fri Nov 8 13:09:42 2019 Page 1
ID:VRLqmclDiflZCj2mk6F92VyQuye-FyCi690T8xxtJJMCGZeMdLRX4FaM?1U_9AfXAPyLFIN

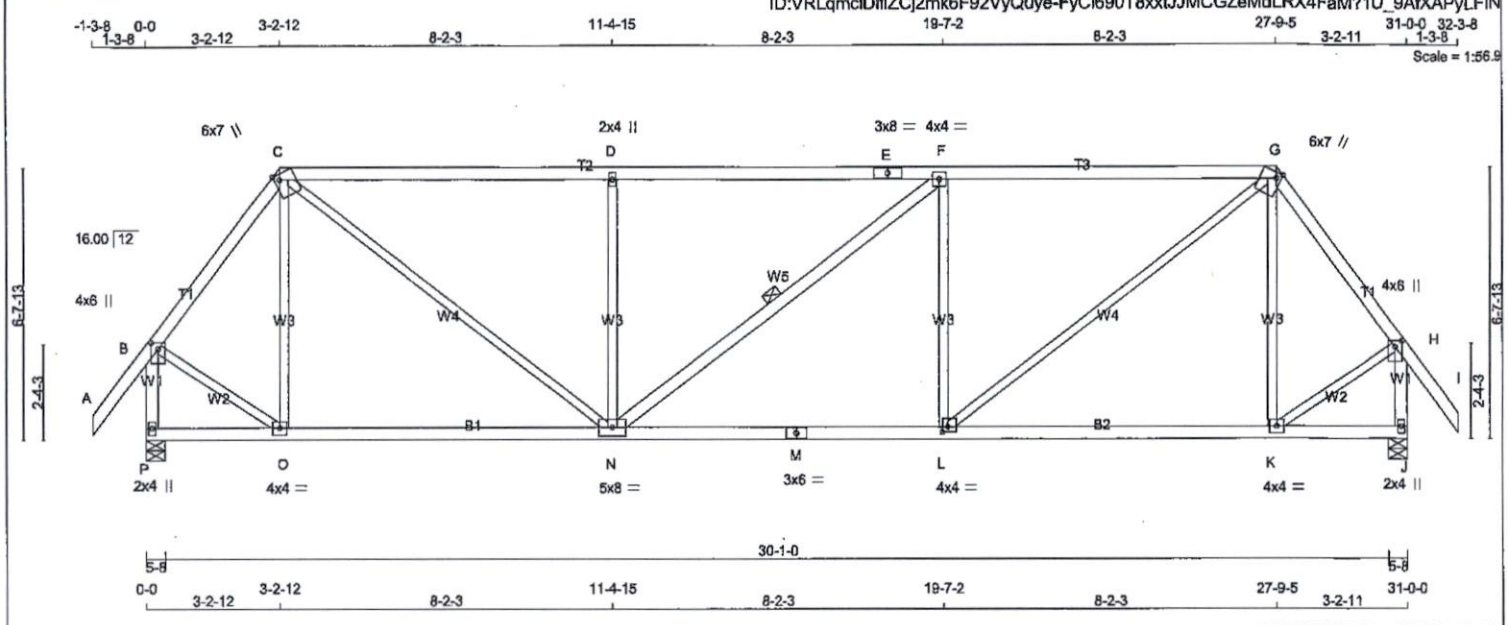

TOTAL WEIGHT = 2 X 139 = 278 lb

LUMBER

N. L. G. A. RULES

CHORDS	SIZE		LUMBER	DESCR.
A - C	2x4	DRY	No.2	SPF
C - E	2x4	DRY	1650F 1.5E	SPF
E - G	2x4	DRY	1650F 1.5E	SPF
G - I	2x4	DRY	No.2	SPF
P - B	2x4	DRY	No.2	SPF
J - H	2x4	DRY	No.2	SPF
P - M	2x4	DRY	No.2	SPF
M - J	2x4	DRY	No.2	SPF
ALL WEBS EXCEPT	2x3	DRY	No.2	SPF
N - F	2x4	DRY	No.2	SPF

DRY: SEASONED LUMBER.

PLATES (table is in inches)

JT	TYPE	PLATES	W	LEN	Y	X
B	TMVW+p	MT20	4.0	6.0	1.75	2.00
C	TTWW+m	MT20	6.0	7.0	Edge	1.50
D	TMW+w	MT20	2.0	4.0		
E	TS-t	MT20	3.0	8.0		
F	TMWW-t	MT20	4.0	4.0		
G	TTWW+m	MT20	6.0	7.0	Edge	1.50
H	TMVW+p	MT20	4.0	6.0	1.75	2.00
J	BMV1+p	MT20	2.0	4.0		
K	BMWW-t	MT20	4.0	4.0		
L	BMWW-t	MT20	4.0	4.0	1.50	1.50
M	BS-t	MT20	3.0	6.0		
N	BMWWW-t	MT20	5.0	8.0		
O	BMWW-t	MT20	4.0	4.0		
P	BMV1+p	MT20	2.0	4.0		

Edge - INDICATES REFERENCE CORNER OF PLATE TOUCHES EDGE OF CHORD.

NOTE: Lateral brace(s) shown shall be 2x4 SPF #2

LICENSED PROFESSIONAL ENGINEER
11/08/2019
R. TURENNE
100157040
PROVINCE OF ONTARIO

DIMENSIONS, SUPPORTS AND LOADINGS SPECIFIED BY FABRICATOR TO BE VERIFIED BY BUILDING DESIGNER

BEARINGS

JT	FACTORED GROSS REACTION VERT	HORZ	MAXIMUM FACTORED GROSS REACTION DOWN	HORZ	UPLIFT	INPUT BRG IN-SX	REQRD BRG IN-SX
P	1722	0	1722	0	0	5-8	2-9
J	1722	0	1722	0	0	5-8	2-9

UNFACTORED REACTIONS

JT	1ST LCASE COMBINED	MAX/MIN. COMPONENT REACTIONS SNOW	LIVE	PERM.LIVE	WIND	DEAD	SOIL
P	1220	787 / 0	0 / 0	0 / 0	0 / 0	432 / 0	0 / 0
J	1220	787 / 0	0 / 0	0 / 0	0 / 0	432 / 0	0 / 0

BEARING MATERIAL TO BE SPF NO.2 OR BETTER AT JOINT(S) P, J

BRACING

TOP CHORD TO BE SHEATHED OR MAX. PURLIN SPACING = 4.32 FT.
MAX. UNBRACED BOTTOM CHORD LENGTH = 10.00 FT OR RIGID CEILING DIRECTLY APPLIED.

ALL PITCH BREAKS AND PERIMETER CORNER JOINTS MUST BE LATERALLY RESTRAINED.

1 LATERAL BRACE(S) AT 1/ 2 LENGTH OF F-N.

END VERTICAL(S) MUST BE SHEATHED OR HAVE BRACES AS INDICATED IN THE MAX. UNBRACED LENGTH COLUMN OF THE TABLE BELOW

LOADING

TOTAL LOAD CASES: (4)

CHORDS

MEMB. FR-TO	MAX. FACTORED FORCE (LBS)	FACTORED VERT. LOAD (PLF) FROM	TO	LC1 CSI (LC)	MAX	MAX. UNBRAC LENGTH
A- B	0 / 48	-84.9	-84.9	0.12 (1)		10.00
B- C	-1265 / 0	-84.9	-84.9	0.19 (1)		5.53
C- D	-1918 / 0	-84.9	-84.9	0.84 (1)		4.32
D- E	-1919 / 0	-84.9	-84.9	0.84 (1)		4.32
E- F	-1919 / 0	-84.9	-84.9	0.84 (1)		4.32
F- G	-1919 / 0	-84.9	-84.9	0.84 (1)		4.32
G- H	-1264 / 0	-84.9	-84.9	0.19 (1)		5.53
H- I	0 / 48	-84.9	-84.9	0.12 (1)		10.00
P- B	-1715 / 0	0.0	0.0	0.22 (1)		6.35
J- H	-1715 / 0	0.0	0.0	0.22 (1)		6.35
P- O	0 / 0	-18.5	-18.5	0.18 (4)		10.00
O- N	0 / 748	-18.5	-18.5	0.31 (4)		10.00
N- M	0 / 1920	-18.5	-18.5	0.44 (1)		10.00
M- L	0 / 1920	-18.5	-18.5	0.44 (1)		10.00
L- K	0 / 748	-18.5	-18.5	0.31 (4)		10.00
K- J	0 / 0	-18.5	-18.5	0.18 (4)		10.00

WEBS

MEMB. FR-TO	MAX. FACTORED FORCE (LBS)	MAX CSI (LC)
O- C	-315 / 0	0.23 (1)
C- N	0 / 1478	0.33 (1)
N- D	-751 / 0	0.55 (1)
N- F	-1 / 0	0.00 (1)
L- F	-751 / 0	0.55 (1)
L- G	0 / 1480	0.33 (1)
K- G	-315 / 0	0.23 (1)
B- O	0 / 874	0.20 (1)
K- H	0 / 874	0.20 (1)

DESIGN CRITERIA

SPECIFIED LOADS:

TOP CH.	LL	=	23.3	PSF
	DL	=	6.0	PSF
BOT CH.	LL	=	0.0	PSF
	DL	=	7.4	PSF
TOTAL LOAD		=	36.7	PSF

SPACING = 24.0 IN. C/C

LOADING IN FLAT SECTION BASED ON A SLOPE OF 2.00/12 MINIMUM

THIS TRUSS IS DESIGNED FOR RESIDENTIAL OR SMALL BUILDING REQUIREMENTS OF PART 9, NBCC 2010

THIS DESIGN COMPLIES WITH:
- PART 9 OF OBC 2012 , BCBC 2012 , ABC 2014
- CSA 086-09
- TPIC 2011

(55 % OF 27.2 P.S.F. G.S.L. PLUS 8.4 P.S.F. RAIN LOAD) EQUALS 23.3 P.S.F. SPECIFIED ROOF LIVE LOAD

ALLOWABLE DEFL.(LL)= L/360 (1.03")
CALCULATED VERT. DEFL.(LL) = L/ 999 (0.09")
ALLOWABLE DEFL.(TL)= L/360 (1.03")
CALCULATED VERT. DEFL.(TL) = L/ 999 (0.20")

CSI: TC=0.84/1.00 (F-G:1) , BC=0.44/1.00 (L-N:1) , WB=0.55/1.00 (F-L:1) , SSI=0.32/1.00 (F-G:1)

DOL LUMBER=1.00 NAIL=1.00 LS BEND=1.10 COMP=1.10 SHEAR=1.10 TENS= 1.10

COMPANION LIVE LOAD FACTOR = 0.50

TRUSS PLATE MANUFACTURER IS NOT RESPONSIBLE FOR QUALITY CONTROL IN THE TRUSS MANUFACTURING PLANT .

NAIL VALUES

PLATE	GRIP(DRY) (PSI) MAX	MIN	SHEAR (PLI) MAX	MIN	SECTION (PLI) MAX	MIN
MT20	618	354	1667	788	1987	1656

PLATE PLACEMENT TOL. = 0.250 inches

PLATE ROTATION TOL. = 5.0 Deg.

JSI GRIP= 0.90 (P) (INPUT = 0.90)
JSI METAL= 0.69 (M) (INPUT = 1.00)

JOB NAME	TRUSS NAME	QUANTITY	PLY	JOB DESC.	DRWG NO.
313991	H23		1	TRUSS DESC. JT-39002	E-19112515

Alpa Roof Truss, Maple

Version 8.300 S Aug 9 2019 MiTek Industries, Inc. Fri Nov 8 13:09:54 2019 Page 1

ID:VRLqmclDiflZCj2mk6F92VyQuye-uGwEeF9_JdRAl9HWz4sA7txa?5hGpNylv1Z9blyLFIB

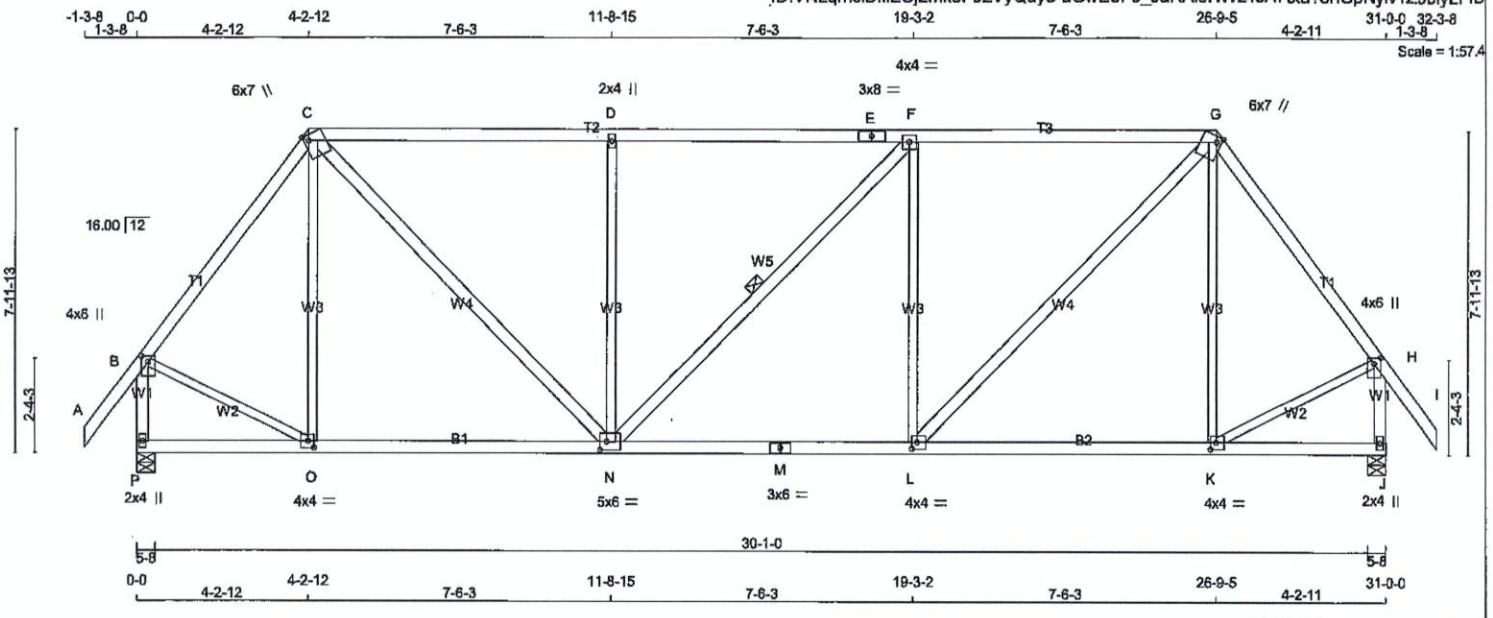

TOTAL WEIGHT = 2 X 154 = 308 lb

[M]

LUMBER

N. L. G. A. RULES

CHORDS	SIZE		LUMBER	DESCR.
A - C	2x4	DRY	No.2	SPF
C - E	2x4	DRY	No.2	SPF
E - G	2x4	DRY	No.2	SPF
G - I	2x4	DRY	No.2	SPF
P - B	2x4	DRY	No.2	SPF
J - H	2x4	DRY	No.2	SPF
P - M	2x4	DRY	No.2	SPF
M - J	2x4	DRY	No.2	SPF
ALL WEBS	2x3	DRY	No.2	SPF
EXCEPT				
C - N	2x4	DRY	No.2	SPF
N - F	2x4	DRY	No.2	SPF
L - G	2x4	DRY	No.2	SPF

DRY: SEASONED LUMBER.

PLATES (table is in inches)

JT	TYPE	PLATES	W	LEN	Y	X
B	TMWW+p	MT20	4.0	6.0	1.75	2.00
C	TTWW+m	MT20	6.0	7.0	Edge	1.50
D	TMW+w	MT20	2.0	4.0		
E	TS-t	MT20	3.0	8.0		
F	TMWW-t	MT20	4.0	4.0		
G	TTWW+m	MT20	6.0	7.0	Edge	1.50
H	TMWW+p	MT20	4.0	6.0	1.75	2.00
J	BMV1+p	MT20	2.0	4.0		
K	BMWW-t	MT20	4.0	4.0	2.00	1.75
L	BMWW-t	MT20	4.0	4.0	2.00	1.50
M	BS-t	MT20	3.0	6.0		
N	BMWWW-t	MT20	5.0	6.0	2.50	2.00
O	BMWW-t	MT20	4.0	4.0	2.00	1.75
P	BMV1+p	MT20	2.0	4.0		

Edge - INDICATES REFERENCE CORNER OF PLATE TOUCHES EDGE OF CHORD.

NOTE: Lateral brace(s) shown shall be 2x4 SPF #2

LICENSED PROFESSIONAL ENGINEER
11/08/2019
R. TURENNE
100157040
PROVINCE OF ONTARIO

DIMENSIONS, SUPPORTS AND LOADINGS SPECIFIED BY FABRICATOR TO BE VERIFIED BY BUILDING DESIGNER

BEARINGS

JT	FACTORED GROSS REACTION VERT	HORZ	MAXIMUM FACTORED GROSS REACTION DOWN	HORZ	UPLIFT	INPUT BRG IN-SX	REQRD BRG IN-SX
P	1722	0	1722	0	0	5-8	2-9
J	1722	0	1722	0	0	5-8	2-9

UNFACTORED REACTIONS

JT	1ST LCASE COMBINED	MAX./MIN. COMPONENT REACTIONS SNOW	LIVE	PERM.LIVE	WIND	DEAD	SOIL
P	1220	787 / 0	0 / 0	0 / 0	0 / 0	432 / 0	0 / 0
J	1220	787 / 0	0 / 0	0 / 0	0 / 0	432 / 0	0 / 0

BEARING MATERIAL TO BE SPF NO.2 OR BETTER AT JOINT(S) P, J

BRACING

TOP CHORD TO BE SHEATHED OR MAX. PURLIN SPACING = 4.08 FT.
MAX. UNBRACED BOTTOM CHORD LENGTH = 10.00 FT OR RIGID CEILING DIRECTLY APPLIED.

ALL PITCH BREAKS AND PERIMETER CORNER JOINTS MUST BE LATERALLY RESTRAINED.

1 LATERAL BRACE(S) AT 1/ 2 LENGTH OF F-N.

END VERTICAL(S) MUST BE SHEATHED OR HAVE BRACES AS INDICATED IN THE MAX. UNBRACED LENGTH COLUMN OF THE TABLE BELOW

LOADING

TOTAL LOAD CASES: (4)

CHORDS

MEMB. FR-TO	MAX. FACTORED FORCE (LBS)	FACTORED VERT. LOAD LC1 (PLF) FROM	TO	MAX CSI (LC)	MAX. UNBRAC LENGTH
A- B	0 / 48	-84.9	-84.9	0.12 (1)	10.00
B- C	-1304 / 0	-84.9	-84.9	0.33 (1)	5.30
C- D	-1590 / 0	-84.9	-84.9	0.84 (1)	4.09
D- E	-1591 / 0	-84.9	-84.9	0.85 (1)	4.08
E- F	-1591 / 0	-84.9	-84.9	0.85 (1)	4.08
F- G	-1591 / 0	-84.9	-84.9	0.85 (1)	4.08
G- H	-1304 / 0	-84.9	-84.9	0.33 (1)	5.30
H- I	0 / 48	-84.9	-84.9	0.12 (1)	10.00
P- B	-1697 / 0	0.0	0.0	0.22 (1)	6.38
J- H	-1697 / 0	0.0	0.0	0.22 (1)	6.38
P- O	0 / 0	-18.5	-18.5	0.16 (4)	10.00
O- N	0 / 775	-18.5	-18.5	0.28 (4)	10.00
N- M	0 / 1592	-18.5	-18.5	0.37 (1)	10.00
M- L	0 / 1592	-18.5	-18.5	0.37 (1)	10.00
L- K	0 / 775	-18.5	-18.5	0.28 (4)	10.00
K- J	0 / 0	-18.5	-18.5	0.16 (4)	10.00

WEBS

MEMB. FR-TO	MAX. FACTORED FORCE (LBS)	MAX CSI (LC)
O- C	-229 / 5	0.28 (1)
C- N	0 / 1164	0.19 (1)
N- D	-690 / 0	0.84 (1)
N- F	-1 / 0	0.00 (1)
L- F	-690 / 0	0.84 (1)
L- G	0 / 1165	0.19 (1)
K- G	-230 / 5	0.28 (1)
B- O	0 / 854	0.19 (1)
K- H	0 / 854	0.19 (1)

DESIGN CRITERIA

SPECIFIED LOADS:

TOP CH.	LL	=	23.3	PSF
	DL	=	6.0	PSF
BOT CH.	LL	=	0.0	PSF
	DL	=	7.4	PSF
TOTAL LOAD		=	36.7	PSF

SPACING = 24.0 IN. C/C

LOADING IN FLAT SECTION BASED ON A SLOPE OF 2.00/12 MINIMUM

THIS TRUSS IS DESIGNED FOR RESIDENTIAL OR SMALL BUILDING REQUIREMENTS OF PART 9, NBCC 2010

THIS DESIGN COMPLIES WITH:
- PART 9 OF OBC 2012 , BCBC 2012 , ABC 2014
- CSA 086-09
- TPIC 2011

(55 % OF 27.2 P.S.F. G.S.L. PLUS 8.4 P.S.F. RAIN LOAD) EQUALS 23.3 P.S.F. SPECIFIED ROOF LIVE LOAD

ALLOWABLE DEFL.(LL)= L/360 (1.03")
CALCULATED VERT. DEFL.(LL) = L/ 999 (0.06")
ALLOWABLE DEFL.(TL)= L/360 (1.03")
CALCULATED VERT. DEFL.(TL) = L/ 999 (0.14")

CSI: TC=0.85/1.00 (F-G:1) , BC=0.37/1.00 (L-N:1) , WB=0.84/1.00 (F-L:1) , SSI=0.30/1.00 (F-G:1)

DOL LUMBER=1.00 NAIL=1.00 LS BEND=1.10 COMP=1.10 SHEAR=1.10 TENS= 1.10

COMPANION LIVE LOAD FACTOR = 0.50

TRUSS PLATE MANUFACTURER IS NOT RESPONSIBLE FOR QUALITY CONTROL IN THE TRUSS MANUFACTURING PLANT .

NAIL VALUES

PLATE	GRIP(DRY) (PSI) MAX	MIN	SHEAR (PLI) MAX	MIN	SECTION (PLI) MAX	MIN
MT20	618	354	1667	788	1987	1656

PLATE PLACEMENT TOL. = 0.250 inches

PLATE ROTATION TOL. = 5.0 Deg.

JSI GRIP= 0.89 (P) (INPUT = 0.90)
JSI METAL= 0.57 (M) (INPUT = 1.00)

JOB NAME	TRUSS NAME	QUANTITY	PLY	JOB DESC.	DRWG NO.
313991	H24	1	1	TRUSS DESC. JT-39002	E-19112516

Alpa Roof Truss, Maple

Version 8.300 S Aug 9 2019 MiTek Industries, Inc. Fri Nov 8 13:10:08 2019 Page 1

ID:VRLqmcIDiflZCj2mk6F92VyQuye-UzmXa2Km0wCBRILCn16ShqW0XkUT5rwp7Cyv4uyLFHz

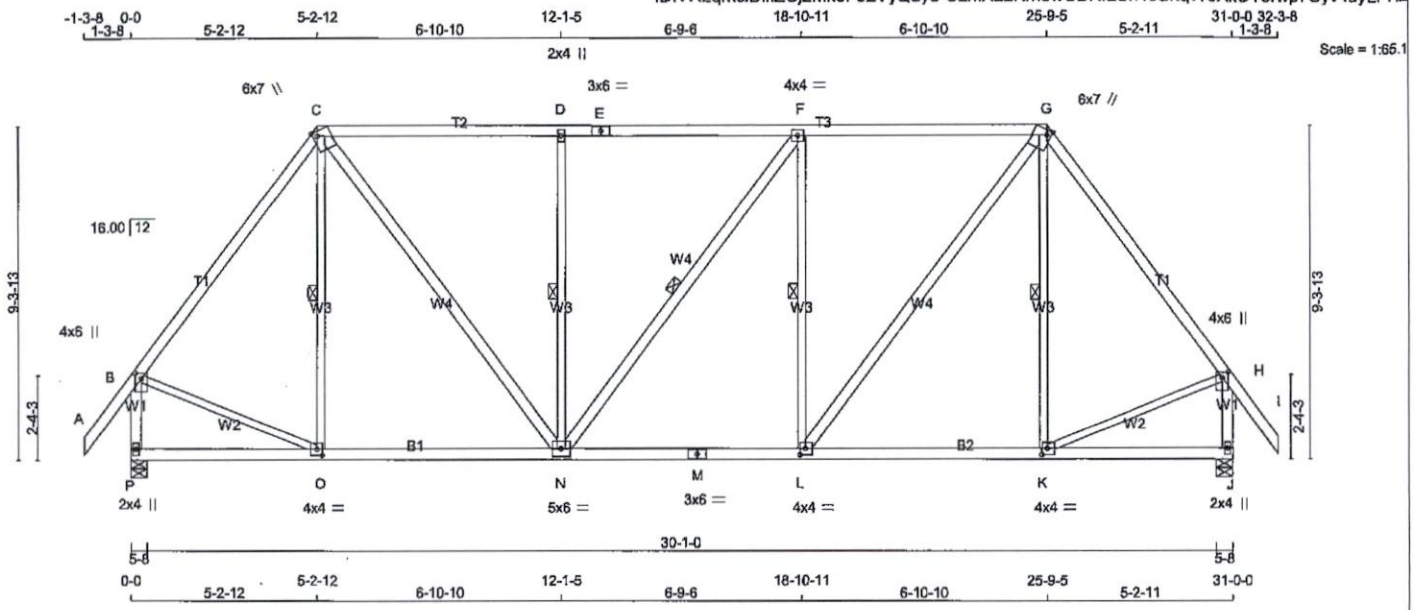

TOTAL WEIGHT = 2 X 163 = 327 lb

[M]

LUMBER

N. L. G. A. RULES

CHORDS	SIZE		LUMBER	DESCR.
A - C	2x4	DRY	No.2	SPF
C - E	2x4	DRY	No.2	SPF
E - G	2x4	DRY	No.2	SPF
G - I	2x4	DRY	No.2	SPF
P - B	2x4	DRY	No.2	SPF
J - H	2x4	DRY	No.2	SPF
P - M	2x4	DRY	No.2	SPF
M - J	2x4	DRY	No.2	SPF
ALL WEBS	2x3	DRY	No.2	SPF
EXCEPT				
C - N	2x4	DRY	No.2	SPF
N - F	2x4	DRY	No.2	SPF
L - G	2x4	DRY	No.2	SPF

DRY: SEASONED LUMBER.

PLATES (table is in inches)

JT	TYPE	PLATES	W	LEN	Y	X
B	TMVW+p	MT20	4.0	6.0	1.75	2.00
C	TTWW+m	MT20	6.0	7.0	Edge	1.50
D	TMV+w	MT20	2.0	4.0		
E	TS-t	MT20	3.0	6.0		
F	TMWW-t	MT20	4.0	4.0		
G	TTWW+m	MT20	6.0	7.0	Edge	1.50
H	TMVW+p	MT20	4.0	6.0	1.75	2.00
J	BMV1+p	MT20	2.0	4.0		
K, L, O						
K	BMWW-t	MT20	4.0	4.0	2.00	1.75
M	BS-t	MT20	3.0	6.0		
N	BMWWW-t	MT20	5.0	6.0		
P	BMV1+p	MT20	2.0	4.0		

Edge - INDICATES REFERENCE CORNER OF PLATE TOUCHES EDGE OF CHORD.

NOTE: Lateral brace(s) shown shall be 2x4 SPF #2

LICENSED PROFESSIONAL ENGINEER
11/08/2019
R. TURENNE
100157040
PROVINCE OF ONTARIO

DIMENSIONS, SUPPORTS AND LOADINGS SPECIFIED BY FABRICATOR TO BE VERIFIED BY BUILDING DESIGNER

BEARINGS

JT	FACTORED GROSS REACTION VERT	HORZ	MAXIMUM FACTORED GROSS REACTION DOWN	HORZ	UPLIFT	INPUT BRG IN-SX	REQRD BRG IN-SX
P	1722	0	1722	0	0	5-8	2-9
J	1722	0	1722	0	0	5-8	2-9

UNFACTORED REACTIONS

JT	1ST LCASE COMBINED	MAX./MIN. COMPONENT REACTIONS SNOW	LIVE	PERM.LIVE	WIND	DEAD	SOIL
P	1220	787 / 0	0 / 0	0 / 0	0 / 0	432 / 0	0 / 0
J	1220	787 / 0	0 / 0	0 / 0	0 / 0	432 / 0	0 / 0

BEARING MATERIAL TO BE SPF NO.2 OR BETTER AT JOINT(S) P, J

BRACING

TOP CHORD TO BE SHEATHED OR MAX. PURLIN SPACING = 4.68 FT.
MAX. UNBRACED BOTTOM CHORD LENGTH = 10.00 FT OR RIGID CEILING DIRECTLY APPLIED.

ALL PITCH BREAKS AND PERIMETER CORNER JOINTS MUST BE LATERALLY RESTRAINED.

1 LATERAL BRACE(S) AT 1/ 2 LENGTH OF C-O, D-N, F-N, F-L, G-K.

END VERTICAL(S) MUST BE SHEATHED OR HAVE BRACES AS INDICATED IN THE MAX. UNBRACED LENGTH COLUMN OF THE TABLE BELOW

LOADING

TOTAL LOAD CASES: (4)

CHORDS

MEMB. FR-TO	MAX. FACTORED FORCE (LBS)	FACTORED VERT. LOAD LC1 (PLF) FROM	TO	MAX CSI (LC)	MAX. UNBRAC LENGTH
A- B	0 / 48	-84.9	-84.9	0.12 (1)	10.00
B- C	-1315 / 0	-84.9	-84.9	0.56 (1)	5.05
C- D	-1359 / 0	-84.9	-84.9	0.64 (1)	4.69
D- E	-1360 / 0	-84.9	-84.9	0.65 (1)	4.68
E- F	-1360 / 0	-84.9	-84.9	0.65 (1)	4.68
F- G	-1361 / 0	-84.9	-84.9	0.65 (1)	4.68
G- H	-1315 / 0	-84.9	-84.9	0.56 (1)	5.05
H- I	0 / 48	-84.9	-84.9	0.12 (1)	10.00
P- B	-1685 / 0	0.0	0.0	0.22 (1)	6.39
J- H	-1685 / 0	0.0	0.0	0.22 (1)	6.39
P- O	0 / 0	-18.5	-18.5	0.16 (4)	10.00
O- N	0 / 784	-18.5	-18.5	0.23 (4)	10.00
N- M	0 / 1361	-18.5	-18.5	0.31 (1)	10.00
M- L	0 / 1361	-18.5	-18.5	0.31 (1)	10.00
L- K	0 / 784	-18.5	-18.5	0.24 (4)	10.00
K- J	0 / 0	-18.5	-18.5	0.16 (4)	10.00

WEBS

MEMB. FR-TO	MAX. FACTORED FORCE (LBS)	MAX CSI (LC)
O- C	-163 / 33	0.09 (1)
C- N	0 / 947	0.15 (1)
N- D	-626 / 0	0.36 (1)
N- F	-2 / 0	0.00 (1)
L- F	-626 / 0	0.36 (1)
L- G	0 / 949	0.15 (1)
K- G	-165 / 32	0.09 (1)
B- O	0 / 837	0.19 (1)
K- H	0 / 837	0.19 (1)

DESIGN CRITERIA

SPECIFIED LOADS:

TOP CH.	LL	=	23.3	PSF
	DL	=	6.0	PSF
BOT CH.	LL	=	0.0	PSF
	DL	=	7.4	PSF
TOTAL LOAD		=	36.7	PSF

SPACING = 24.0 IN. C/C

LOADING IN FLAT SECTION BASED ON A SLOPE OF 2.00/12 MINIMUM

THIS TRUSS IS DESIGNED FOR RESIDENTIAL OR SMALL BUILDING REQUIREMENTS OF PART 9, NBCC 2010

THIS DESIGN COMPLIES WITH:
- PART 9 OF OBC 2012 , BCBC 2012 , ABC 2014
- CSA 086-09
- TPIC 2011

(55 % OF 27.2 P.S.F. G.S.L. PLUS 8.4 P.S.F. RAIN LOAD) EQUALS 23.3 P.S.F. SPECIFIED ROOF LIVE LOAD

ALLOWABLE DEFL.(LL)= L/360 (1.03")
CALCULATED VERT. DEFL.(LL) = L/ 999 (0.05")
ALLOWABLE DEFL.(TL)= L/360 (1.03")
CALCULATED VERT. DEFL.(TL) = L/ 999 (0.11")

CSI: TC=0.65/1.00 (F-G:1) , BC=0.31/1.00 (L-N:1) , WB=0.36/1.00 (F-L:1) , SSI=0.27/1.00 (F-G:1)

DOL LUMBER=1.00 NAIL=1.00 LS BEND=1.10 COMP=1.10 SHEAR=1.10 TENS= 1.10

COMPANION LIVE LOAD FACTOR = 0.50

TRUSS PLATE MANUFACTURER IS NOT RESPONSIBLE FOR QUALITY CONTROL IN THE TRUSS MANUFACTURING PLANT .

NAIL VALUES

PLATE	GRIP(DRY) (PSI) MAX	MIN	SHEAR (PLI) MAX	MIN	SECTION (PLI) MAX	MIN
MT20	618	354	1667	788	1987	1656

PLATE PLACEMENT TOL. = 0.250 inches

PLATE ROTATION TOL. = 5.0 Deg.

JSI GRIP= 0.88 (P) (INPUT = 0.90)
JSI METAL= 0.52 (B) (INPUT = 1.00)

JOB NAME	TRUSS NAME	QUANTITY	PLY	JOB DESC. / TRUSS DESC.	DRWG NO.
313991	H25		1	JT-39002	E-19112517

Alpa Roof Truss, Maple

Version 8.300 S Aug 9 2019 MiTek Industries, Inc. Fri Nov 8 13:10:33 2019 Page 1
ID:VRLqmclDiflZCj2mk6F92VyQuye-Fmn_qbdS7cMex8m?In3JC52Mdp0wS8lUtbVjSxyLFHa

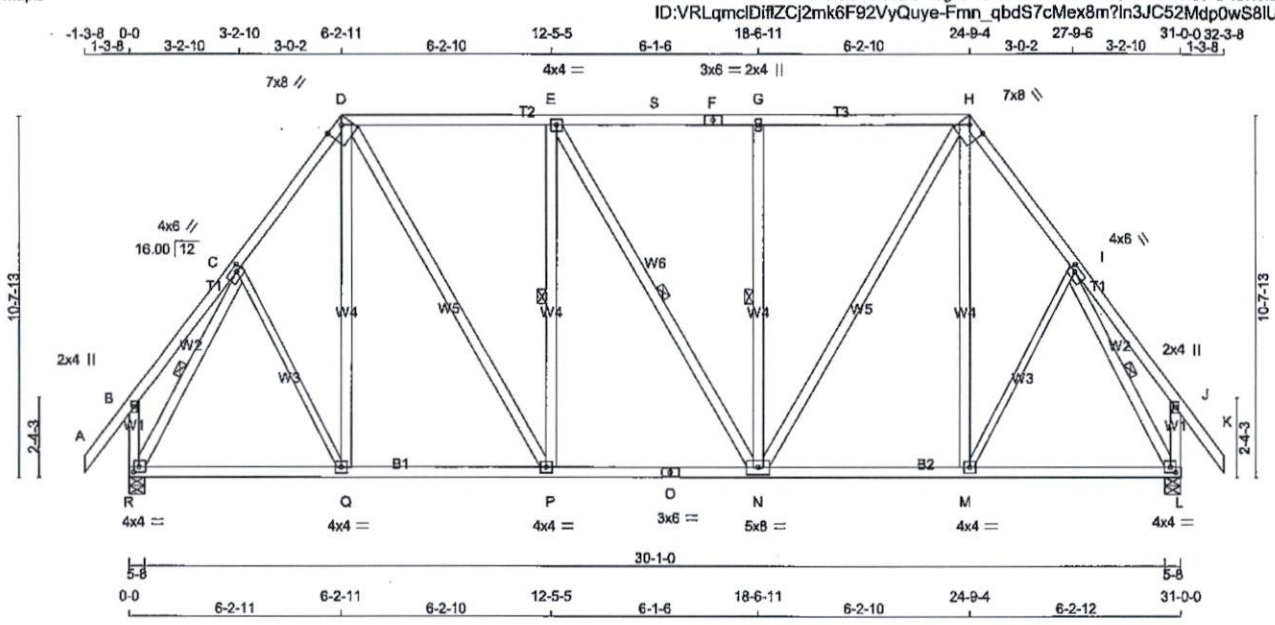

TOTAL WEIGHT = 7 X 202 = 1411 lb

[M][F]

LUMBER

N. L. G. A. RULES

CHORDS	SIZE		LUMBER	DESCR.
A - D	2x4	DRY	No.2	SPF
D - F	2x4	DRY	No.2	SPF
F - H	2x4	DRY	No.2	SPF
H - K	2x4	DRY	No.2	SPF
R - B	2x4	DRY	No.2	SPF
L - J	2x4	DRY	No.2	SPF
R - O	2x4	DRY	No.2	SPF
O - L	2x4	DRY	No.2	SPF
ALL WEBS EXCEPT	2x4	DRY	No.2	SPF
C - Q	2x3	DRY	No.2	SPF
M - I	2x3	DRY	No.2	SPF

DRY: SEASONED LUMBER.

PLATES (table is in inches)

JT	TYPE	PLATES	W	LEN	Y	X
B	TMV+p	MT20	2.0	4.0		
C	TMWW-t	MT20	4.0	6.0	1.75	2.00
D	TTWW-h	MT20	7.0	8.0	2.00	5.25
E	TMWW-t	MT20	4.0	4.0		
F	TS-t	MT20	3.0	6.0		
G	TMW+w	MT20	2.0	4.0		
H	TTWW-h	MT20	7.0	8.0	2.00	5.25
I	TMWW-t	MT20	4.0	6.0	1.75	2.00
J	TMV+p	MT20	2.0	4.0		
L	BMVW1-t	MT20	4.0	4.0	1.75	1.75
M, P, Q						
M	BMWW-t	MT20	4.0	4.0		
N	BMWWW-t	MT20	5.0	8.0		
O	BS-t	MT20	3.0	6.0		
R	BMVW1-t	MT20	4.0	4.0	1.75	1.75

NOTE: Lateral brace(s) shown shall be 2x4 SPF #2

LICENSED PROFESSIONAL ENGINEER
11/08/2019
R. TURENNE
100157040
PROVINCE OF ONTARIO

DIMENSIONS, SUPPORTS AND LOADINGS SPECIFIED BY FABRICATOR TO BE VERIFIED BY BUILDING DESIGNER

BEARINGS

JT	FACTORED GROSS REACTION VERT	HORZ	MAXIMUM FACTORED GROSS REACTION DOWN	HORZ	UPLIFT	INPUT BRG IN-SX	REQRD BRG IN-SX
R	1791	0	1791	0	0	5-8	1-15
L	1791	0	1791	0	0	5-8	1-15

UNFACTORED REACTIONS

JT	1ST LCASE COMBINED	MAX./MIN. COMPONENT REACTIONS SNOW	LIVE	PERM.LIVE	WIND	DEAD	SOIL
R	1275	787 / 0	0 / 0	0 / 0	0 / 0	488 / 0	0 / 0
L	1275	787 / 0	0 / 0	0 / 0	0 / 0	488 / 0	0 / 0

BEARING MATERIAL TO BE SPF NO.2 OR BETTER AT JOINT(S) R, L

BRACING

FOR SECTION D-H, MAX. PURLIN SPACING = 2.00 FT.
FOR OTHER SECTIONS, TOP CHORD TO BE SHEATHED OR MAX. PURLIN SPACING = 5.40 FT.
MAX. UNBRACED BOTTOM CHORD LENGTH = 10.00 FT OR RIGID CEILING DIRECTLY APPLIED.

ALL PITCH BREAKS AND PERIMETER CORNER JOINTS MUST BE LATERALLY RESTRAINED.

1 LATERAL BRACE(S) AT 1/ 2 LENGTH OF E-P, E-N, G-N, C-R, I-L.

END VERTICAL(S) MUST BE SHEATHED OR HAVE BRACES AS INDICATED IN THE MAX. UNBRACED LENGTH COLUMN OF THE TABLE BELOW

LOADING

TOTAL LOAD CASES: (4)

CHORDS

MEMB. FR-TO	MAX. FACTORED FORCE (LBS)	FACTORED VERT. LOAD LC1 (PLF) FROM	TO	MAX CSI (LC)	MAX. UNBRAC LENGTH
A- B	0 / 48	-84.9	-84.9	0.12 (1)	10.00
B- C	0 / 24	-84.9	-84.9	0.13 (1)	10.00
C- D	-1404 / 0	-84.9	-84.9	0.13 (1)	5.40
D- E	-1260 / 0	-92.4	-92.4	0.43 (1)	2.00
E- S	-1259 / 0	-92.4	-92.4	0.39 (1)	2.00
S- F	-1259 / 0	-92.4	-92.4	0.39 (1)	2.00
F- G	-1259 / 0	-92.4	-92.4	0.39 (1)	2.00
G- H	-1259 / 0	-92.4	-92.4	0.43 (1)	2.00
H- I	-1404 / 0	-84.9	-84.9	0.13 (1)	5.40
I- J	0 / 24	-84.9	-84.9	0.13 (1)	10.00
J- K	0 / 48	-84.9	-84.9	0.12 (1)	10.00
R- B	-218 / 0	0.0	0.0	0.03 (1)	7.81
L- J	-218 / 0	0.0	0.0	0.03 (1)	7.81
R- Q	0 / 770	-18.5	-18.5	0.25 (4)	10.00
Q- P	0 / 823	-18.5	-18.5	0.26 (4)	10.00
P- O	0 / 1260	-18.5	-18.5	0.27 (1)	10.00
O- N	0 / 1260	-18.5	-18.5	0.27 (1)	10.00
N- M	0 / 823	-18.5	-18.5	0.26 (4)	10.00
M- L	0 / 770	-18.5	-18.5	0.25 (4)	10.00

WEBS

MEMB. FR-TO	MAX. FACTORED FORCE (LBS)	MAX CSI (LC)
C- Q	0 / 108	0.03 (4)
Q- D	0 / 75	0.02 (4)
D- P	0 / 846	0.14 (1)
P- E	-615 / 0	0.35 (1)
E- N	-2 / 0	0.00 (1)
N- G	-614 / 0	0.35 (1)
N- H	0 / 844	0.14 (1)
M- H	0 / 75	0.02 (4)
M- I	0 / 108	0.03 (4)
R- C	-1709 / 0	0.38 (1)
I- L	-1709 / 0	0.38 (1)

DESIGN CRITERIA

SPECIFIED LOADS:

TOP CH.	LL	=	23.3	PSF
	DL	=	6.0	PSF
BOT CH.	LL	=	0.0	PSF
	DL	=	7.4	PSF
TOTAL LOAD		=	36.7	PSF

SPACING = 24.0 IN. C/C

LOADING IN FLAT SECTION BASED ON PIGGYBACK TRUSS WITH SLOPES OF 6.00/12 AND -6.00/12 AND RESPECTIVE WALL HEIGHTS OF 0-0 AND 0-0 AND AN ADDITIONAL DEAD LOAD OF 3.0 P.S.F.

THIS TRUSS IS DESIGNED FOR RESIDENTIAL OR SMALL BUILDING REQUIREMENTS OF PART 9, NBCC 2010

THIS DESIGN COMPLIES WITH:
- PART 9 OF OBC 2012 , BCBC 2012 , ABC 2014
- CSA 086-09
- TPIC 2011

(55 % OF 27.2 P.S.F. G.S.L. PLUS 8.4 P.S.F. RAIN LOAD) EQUALS 23.3 P.S.F. SPECIFIED ROOF LIVE LOAD

ALLOWABLE DEFL.(LL)= L/360 (1.03")
CALCULATED VERT. DEFL.(LL) = L/ 999 (0.04")
ALLOWABLE DEFL.(TL)= L/360 (1.03")
CALCULATED VERT. DEFL.(TL) = L/ 999 (0.10")

CSI: TC=0.43/1.00 (D-E:1) , BC=0.27/1.00 (N-P:1) , WB=0.38/1.00 (I-L:1) , SSI=0.27/1.00 (D-E:1)

DOL LUMBER=1.00 NAIL=1.00 LS BEND=1.10 COMP=1.10 SHEAR=1.10 TENS= 1.10

COMPANION LIVE LOAD FACTOR = 0.50

AUTOSOLVE HEELS OFF

TRUSS PLATE MANUFACTURER IS NOT RESPONSIBLE FOR QUALITY CONTROL IN THE TRUSS MANUFACTURING PLANT .

NAIL VALUES

PLATE	GRIP(DRY) (PSI) MAX	MIN	SHEAR (PLI) MAX	MIN	SECTION (PLI) MAX	MIN
MT20	618	354	1667	788	1987	1656

PLATE PLACEMENT TOL. = 0.250 inches

PLATE ROTATION TOL. = 5.0 Deg.

JSI GRIP= 0.89 (P) (INPUT = 0.90)
JSI METAL= 0.45 (O) (INPUT = 1.00)

JOB NAME	TRUSS NAME	QUANTITY	PLY	JOB DESC.	DRWG NO.
313991	H26P		1	TRUSS DESC. JT-39002	E-19112518

Alpa Roof Truss, Maple

Version 8.300 S Aug 9 2019 MiTek Industries, Inc. Fri Nov 8 13:10:46 2019 Page 1
ID:VRLqmclDiflZCj2mk6F92VyQuye-NG3uY1nc3c?o?8FV0?oNEr5VA3T??5_Pt79vQhyLFHN

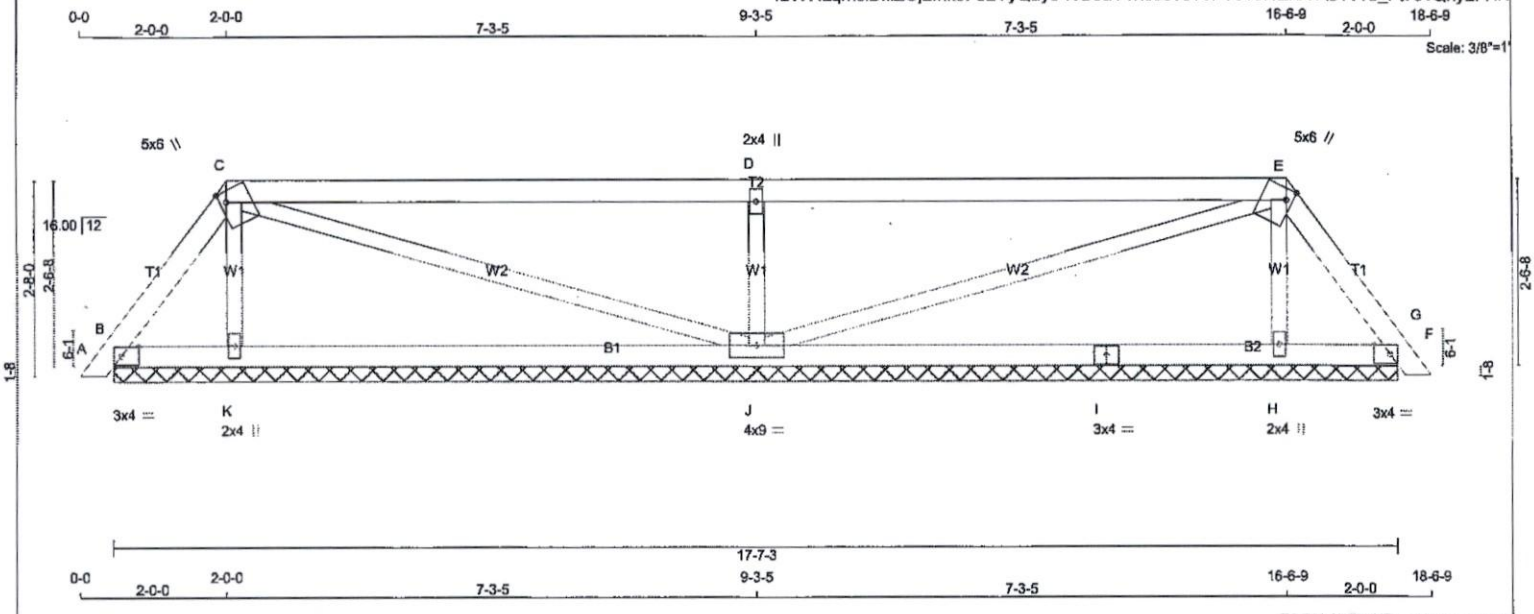

TOTAL WEIGHT = 3 X 61 = 182 lb

LUMBER
N. L. G. A. RULES

CHORDS	SIZE		LUMBER	DESCR.
A - C	2x4	DRY	No.2	SPF
C - E	2x4	DRY	No.2	SPF
E - G	2x4	DRY	No.2	SPF
B - I	2x4	DRY	No.2	SPF
I - F	2x4	DRY	No.2	SPF
ALL WEBS	2x3	DRY	No.2	SPF

DRY: SEASONED LUMBER.

PLATES (table is in inches)

JT	TYPE	PLATES	W	LEN	Y	X
B	TMB1-I	MT20	3.0	4.0	1.50	2.75
C	TTWW+m	MT20	5.0	6.0	1.75	1.00
D	TMW+w	MT20	2.0	4.0		
E	TTWW+m	MT20	5.0	6.0	1.75	1.00
F	TMB1-I	MT20	3.0	4.0	1.50	2.75
H	BMW1+w	MT20	2.0	4.0		
I	BS-I	MT20	3.0	4.0		
J	BMWWW1-t	MT20	4.0	9.0		
K	BMW1+w	MT20	2.0	4.0		

NOTE: Lateral brace(s) shown shall be 2x4 SPF #2

LICENSED PROFESSIONAL ENGINEER
11/08/2019
B. TURENNE
100157040
PROVINCE OF ONTARIO

DIMENSIONS, SUPPORTS AND LOADINGS SPECIFIED BY FABRICATOR TO BE VERIFIED BY BUILDING DESIGNER

BEARINGS

JT	FACTORED GROSS REACTION VERT	HORZ	MAXIMUM FACTORED GROSS REACTION DOWN	HORZ	UPLIFT	INPUT BRG IN-SX	REQRD BRG IN-SX
B	147	0	147	0	0	17-7-3 (4-0-0)	8-4
K	329	0	329	0	0	17-7-3 (4-0-0)	8-4
J	926	0	926	0	0	17-7-3 (4-0-0)	8-4
H	329	0	329	0	0	17-7-3 (4-0-0)	8-4
F	147	0	147	0	0	17-7-3 (4-0-0)	8-4

VALUE IN PARENTHESIS INDICATES EFFECTIVE BEARING LENGTH

UNFACTORED REACTIONS

JT	1ST LCASE COMBINED	MAX./MIN. COMPONENT REACTIONS SNOW	LIVE	PERM.LIVE	WIND	DEAD	SOIL
B	99	93 / 0	0 / 0	0 / 0	0 / 0	6 / 0	0 / 0
K	240	117 / 0	0 / 0	0 / 0	0 / 0	123 / 0	0 / 0
J	655	432 / 0	0 / 0	0 / 0	0 / 0	223 / 0	0 / 0
H	240	117 / 0	0 / 0	0 / 0	0 / 0	123 / 0	0 / 0
F	99	93 / 0	0 / 0	0 / 0	0 / 0	6 / 0	0 / 0

BEARING MATERIAL TO BE SPF NO.2 OR BETTER AT JOINT(S) B, K, J, H, F

BRACING
TOP CHORD TO BE SHEATHED OR MAX. PURLIN SPACING = 6.25 FT.
MAX. UNBRACED BOTTOM CHORD LENGTH = 10.00 FT OR RIGID CEILING DIRECTLY APPLIED.

ALL PITCH BREAKS AND PERIMETER CORNER JOINTS MUST BE LATERALLY RESTRAINED.

LOADING
TOTAL LOAD CASES: (4)

CHORDS

MEMB. FR-TO	MAX. FACTORED FORCE (LBS)	FACTORED VERT. LOAD LC1 (PLF) FROM	TO	MAX CSI (LC)	MAX. UNBRAC LENGTH
A- B	0 / 11	-84.9	-84.9	0.01 (1)	10.00
B- C	-92 / 0	-84.9	-84.9	0.03 (1)	6.25
C- D	-16 / 0	-84.9	-84.9	0.76 (1)	6.25
D- E	-16 / 0	-84.9	-84.9	0.76 (1)	6.25
E- F	-92 / 0	-84.9	-84.9	0.03 (1)	6.25
F- G	0 / 11	-84.9	-84.9	0.01 (1)	10.00
B- K	0 / 52	-18.5	-18.5	0.15 (4)	10.00
K- J	0 / 42	-18.5	-18.5	0.21 (4)	10.00
J- I	0 / 42	-18.5	-18.5	0.21 (4)	10.00
I- H	0 / 42	-18.5	-18.5	0.21 (4)	10.00
H- F	0 / 52	-18.5	-18.5	0.15 (4)	10.00

WEBS

MEMB. FR-TO	MAX. FACTORED FORCE (LBS)	MAX CSI (LC)
K- C	-213 / 0	0.03 (1)
C- J	-27 / 0	0.03 (1)
J- D	-771 / 0	0.12 (1)
J- E	-27 / 0	0.03 (1)
H- E	-213 / 0	0.03 (1)

DESIGN CRITERIA

SPECIFIED LOADS:

TOP CH.	LL =	23.3	PSF
	DL =	6.0	PSF
BOT CH.	LL =	0.0	PSF
	DL =	7.4	PSF
TOTAL LOAD	=	36.7	PSF

SPACING = 24.0 IN. C/C

LOADING IN FLAT SECTION BASED ON A SLOPE OF 2.00/12 MINIMUM

THIS TRUSS IS DESIGNED FOR RESIDENTIAL OR SMALL BUILDING REQUIREMENTS OF PART 9, NBCC 2010

THIS DESIGN COMPLIES WITH:
- PART 9 OF OBC 2012 , BCBC 2012 , ABC 2014
- CSA 086-09
- TPIC 2011

(55 % OF 27.2 P.S.F. G.S.L. PLUS 8.4 P.S.F. RAIN LOAD) EQUALS 23.3 P.S.F. SPECIFIED ROOF LIVE LOAD

CSI: TC=0.76/1.00 (C-D:1) , BC=0.21/1.00 (J-K:4) , WB=0.12/1.00 (D-J:1) , SSI=0.30/1.00 (C-D:1)

DOL LUMBER=1.00 NAIL=1.00 LS BEND=1.10 COMP=1.10 SHEAR=1.10 TENS= 1.10

COMPANION LIVE LOAD FACTOR = 0.50

TRUSS PLATE MANUFACTURER IS NOT RESPONSIBLE FOR QUALITY CONTROL IN THE TRUSS MANUFACTURING PLANT .

NAIL VALUES

PLATE	GRIP(DRY) (PSI) MAX	MIN	SHEAR (PLI) MAX	MIN	SECTION (PLI) MAX	MIN
MT20	618	354	1667	788	1987	1656

PLATE PLACEMENT TOL. = 0.250 inches

PLATE ROTATION TOL. = 5.0 Deg.

JSI GRIP= 0.64 (E) (INPUT = 0.90)
JSI METAL= 0.16 (I) (INPUT = 1.00)

JOB NAME	TRUSS NAME	QUANTITY	PLY	JOB DESC.	DRWG NO.
313991	H31		1	TRUSS DESC. JT-39002	E-19112519

Alpa Roof Truss, Maple

Version 8.300 S Aug 9 2019 MiTek Industries, Inc. Fri Nov 8 12:52:46 2019 Page 1
ID:VRLqmclDiflZCj2mk6F92VyQuye-_VpctIj9Pmw1QAhxlBQ6S5MwTihkyYuRX5XmWHyLFYF

Scale = 1:44.2

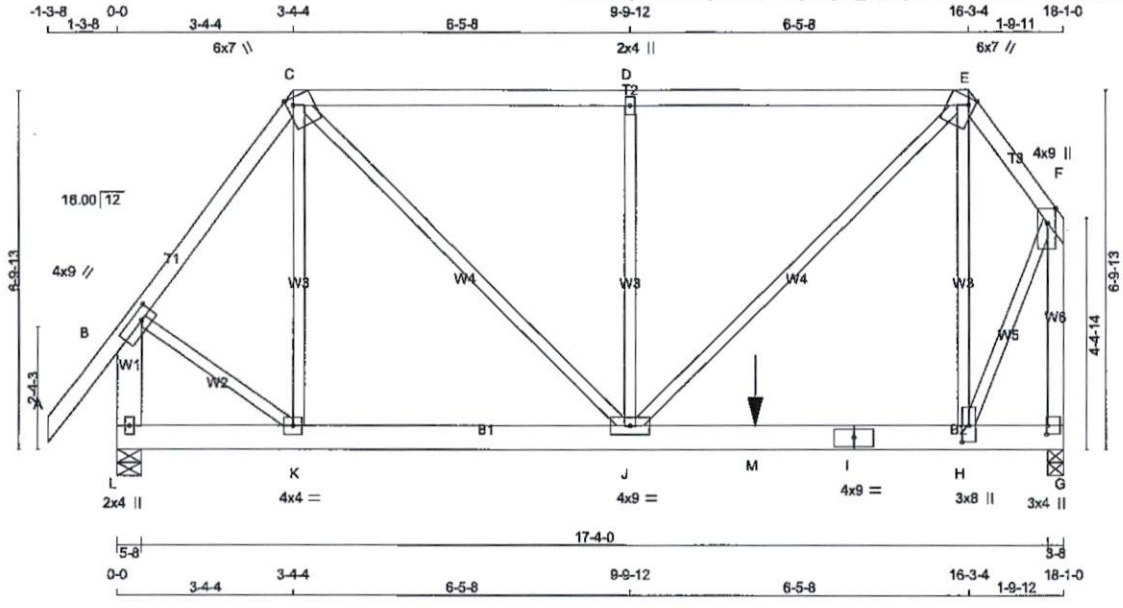

TOTAL WEIGHT = 103 lb

LUMBER

N. L. G. A. RULES

CHORDS	SIZE		LUMBER	DESCR.
A - C	2x4	DRY	No.2	SPF
C - E	2x4	DRY	No.2	SPF
E - F	2x4	DRY	No.2	SPF
L - B	2x6	DRY	No.2	SPF
G - F	2x4	DRY	No.2	SPF
L - I	2x6	DRY	No.2	SPF
I - G	2x6	DRY	No.2	SPF
ALL WEBS EXCEPT	2x3	DRY	No.2	SPF

DRY: SEASONED LUMBER.

PLATES (table is in inches)

JT	TYPE	PLATES	W	LEN	Y	X
B	TMVW-t	MT20	4.0	9.0	2.00	3.00
C	TTWW+m	MT20	6.0	7.0	Edge	1.50
D	TMW+w	MT20	2.0	4.0		
E	TTWW+m	MT20	6.0	7.0	Edge	1.50
F	TMVW+p	MT20	4.0	9.0	3.25	1.75
G	BMV1+p	MT20	3.0	4.0	2.00	0.25
H	BMWW+t	MT20	3.0	8.0	3.75	1.50
I	BS-t	MT20	4.0	9.0		
J	BMWWW-t	MT20	4.0	9.0		
K	BMWW-t	MT20	4.0	4.0		
L	BMV1+p	MT20	2.0	4.0		

Edge - INDICATES REFERENCE CORNER OF PLATE TOUCHES EDGE OF CHORD.

NOTE: Lateral brace(s) shown shall be 2x4 SPF #2

LICENSED PROFESSIONAL ENGINEER
11/08/2019
R. TURENNE
100157040
PROVINCE OF ONTARIO

DIMENSIONS, SUPPORTS AND LOADINGS SPECIFIED BY FABRICATOR TO BE VERIFIED BY BUILDING DESIGNER

BEARINGS

JT	FACTORED GROSS REACTION VERT	HORZ	MAXIMUM FACTORED GROSS REACTION DOWN	HORZ	UPLIFT	INPUT BRG IN-SX	REQRD BRG IN-SX
L	1473	0	1473	0	0	5-8	1-10
G	2099	0	2099	0	0	3-8	3-5

UNFACTORED REACTIONS

JT	1ST LCASE COMBINED	MAX./MIN. COMPONENT REACTIONS SNOW	LIVE	PERM.LIVE	WIND	DEAD	SOIL
L	1043	675 / 0	0 / 0	0 / 0	0 / 0	368 / 0	0 / 0
G	1490	946 / 0	0 / 0	0 / 0	0 / 0	544 / 0	0 / 0

BEARING MATERIAL TO BE SPF NO.2 OR BETTER AT JOINT(S) L, G

BRACING

TOP CHORD TO BE SHEATHED OR MAX. PURLIN SPACING = 4.24 FT.
MAX. UNBRACED BOTTOM CHORD LENGTH = 10.00 FT OR RIGID CEILING DIRECTLY APPLIED.

ALL PITCH BREAKS AND PERIMETER CORNER JOINTS MUST BE LATERALLY RESTRAINED.

LOADING

TOTAL LOAD CASES: (4)

CHORDS

MEMB. FR-TO	MAX. FACTORED FORCE (LBS)	FACTORED VERT. LOAD (PLF) FROM	TO	LC1 CSI (LC)	MAX	MAX. UNBRAC LENGTH
A- B	0 / 48	-84.9	-84.9	0.13 (1)	10.00	
B- C	-1018 / 0	-84.9	-84.9	0.21 (1)	5.94	
C- D	-1447 / 0	-84.9	-84.9	0.76 (1)	4.24	
D- E	-1447 / 0	-84.9	-84.9	0.76 (1)	4.24	
E- F	-1166 / 0	-84.9	-84.9	0.07 (1)	5.81	
L- B	-1409 / 0	0.0	0.0	0.13 (1)	7.81	
G- F	-2435 / 0	0.0	0.0	0.78 (1)	5.42	
L- K	0 / 0	-18.5	-18.5	0.08 (1)	10.00	
K- J	0 / 600	-18.5	-18.5	0.52 (1)	10.00	
J- M	0 / 689	-18.5	-18.5	0.95 (1)	10.00	
M- I	0 / 689	-118.6	-118.6	0.95 (1)	10.00	
I- H	0 / 689	-118.6	-118.6	0.95 (1)	10.00	
H- G	0 / 0	-118.6	-118.6	0.63 (1)	10.00	

WEBS

MEMB. FR-TO	MAX. FACTORED FORCE (LBS)	MAX CSI (LC)
K- C	-383 / 0	0.29 (1)
C- J	0 / 1193	0.30 (1)
J- D	-658 / 0	0.49 (1)
J- E	0 / 1068	0.26 (1)
H- E	-108 / 22	0.08 (1)
B- K	0 / 690	0.17 (1)
H- F	0 / 1578	0.39 (1)

FACTORED CONCENTRATED LOADS (LBS)

JT	LOC.	LC1	MAX-	MAX+	FACE	DIR.	TYPE	HEEL	CONN.
M	12-2-9	-994	-994	—	FRONT	VERT	TOTAL	—	C1

CONNECTION REQUIREMENTS

1) C1: A SUITABLE HANGER/MECHANICAL CONNECTION IS REQUIRED.

[M]

DESIGN CRITERIA

*** SPECIAL LOADS ANALYSIS ***
GEOMETRY AND/OR BASIC LOADS CHANGED BY USER.
LOADS WERE DERIVED FROM USER INPUT
NO FURTHER MODIFICATIONS WERE MADE

SPECIFIED LOADS:

TOP CH.	LL	=	23.3	PSF
	DL	=	6.0	PSF
BOT CH.	LL	=	0.0	PSF
	DL	=	7.4	PSF
TOTAL LOAD		=	36.7	PSF

SPACING = 24.0 IN. C/C

LOADING IN FLAT SECTION BASED ON A SLOPE OF 2.00/12 MINIMUM

GIRDER TYPE: CStdGirder
START DISTANCE = 12-2-8
START SPAN CARRIED = 5-10-8
END DISTANCE = 18-1-0
END SPAN CARRIED = 5-10-8
END WALL WIDTH = 0-0
APPLIED TO FRONT SIDE OF BOTTOM CHORD.
- ADDT'L LOADS BASED ON 55 % OF GSL.

*** NON STANDARD GIRDER ***
ADDT'L USER-DEFINED LOADS APPLIED TO ALL LOAD CASES.

THIS TRUSS IS DESIGNED FOR RESIDENTIAL OR SMALL BUILDING REQUIREMENTS OF PART 9, NBCC 2010

THIS DESIGN COMPLIES WITH:
- PART 9 OF OBC 2012 , BCBC 2012 , ABC 2014
- CSA 086-09
- TPIC 2011

(55 % OF 27.2 P.S.F. G.S.L. PLUS 8.4 P.S.F. RAIN LOAD) EQUALS 23.3 P.S.F. SPECIFIED ROOF LIVE LOAD

ALLOWABLE DEFL.(LL)= L/360 (0.60")
CALCULATED VERT. DEFL.(LL) = L/ 999 (0.11")
ALLOWABLE DEFL.(TL)= L/360 (0.60")
CALCULATED VERT. DEFL.(TL) = L/ 999 (0.21")

CSI: TC=0.78/1.00 (F-G:1) , BC=0.95/1.00 (H-J:1) , WB=0.49/1.00 (D-J:1) , SSI=0.50/1.00 (H-J:1)

DOL LUMBER=1.00 NAIL=1.00 LS BEND=1.00 COMP=1.00 SHEAR=1.00 TENS= 1.00

COMPANION LIVE LOAD FACTOR = 0.50

AUTOSOLVE RIGHT HEEL ONLY

TRUSS PLATE MANUFACTURER IS NOT RESPONSIBLE FOR QUALITY CONTROL IN THE TRUSS MANUFACTURING PLANT .

CONTINUED ON PAGE 2

JOB NAME	TRUSS NAME	QUANTITY	PLY	JOB DESC.	DRWG NO.
313991	H32		1	TRUSS DESC. JT-39002	E-19112520

Alpa Roof Truss, Maple

Version 8.300 S Aug 9 2019 MiTek Industries, Inc. Fri Nov 8 13:11:06 2019 Page 1
ID:VRLqmcIDiflZCj2mk6F92VyQuye-n7HSlt19MlWyODnLBC9312w?G7JhhzVLTE?z7XyLFH3

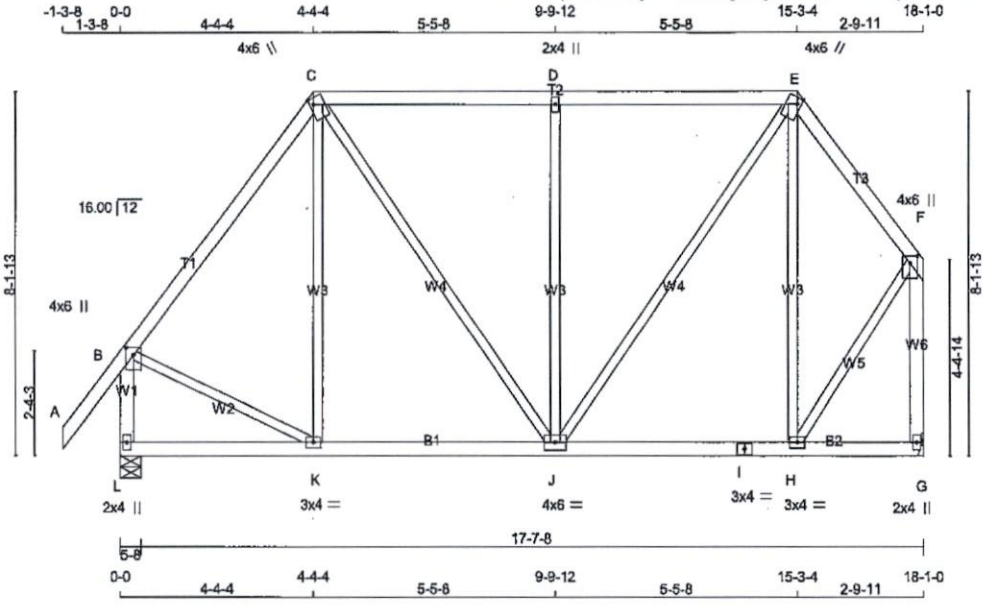

TOTAL WEIGHT = 98 lb
[M]

LUMBER
N. L. G. A. RULES

CHORDS	SIZE		LUMBER	DESCR.
A - C	2x4	DRY	No.2	SPF
C - E	2x4	DRY	No.2	SPF
E - F	2x4	DRY	No.2	SPF
L - B	2x4	DRY	No.2	SPF
G - F	2x4	DRY	No.2	SPF
L - I	2x4	DRY	No.2	SPF
I - G	2x4	DRY	No.2	SPF
ALL WEBS EXCEPT	2x3	DRY	No.2	SPF

DRY: SEASONED LUMBER.

PLATES (table is in inches)

JT	TYPE	PLATES	W	LEN	Y	X
B	TMVW+p	MT20	4.0	6.0	2.00	2.00
C	TTWW+m	MT20	4.0	6.0	1.75	1.00
D	TMW+w	MT20	2.0	4.0		
E	TTWW+m	MT20	4.0	6.0	1.75	1.00
F	TMVW+p	MT20	4.0	6.0	2.00	2.00
G	BMV1+p	MT20	2.0	4.0		
H	BMWW-t	MT20	3.0	4.0		
I	BS-t	MT20	3.0	4.0		
J	BMWWW-t	MT20	4.0	6.0		
K	BMWW-t	MT20	3.0	4.0		
L	BMV1+p	MT20	2.0	4.0		

NOTE: Lateral brace(s) shown shall be 2x4 SPF #2

DIMENSIONS, SUPPORTS AND LOADINGS SPECIFIED BY FABRICATOR TO BE VERIFIED BY BUILDING DESIGNER

BEARINGS

JT	FACTORED GROSS REACTION VERT	HORZ	MAXIMUM FACTORED GROSS REACTION DOWN	HORZ	UPLIFT	INPUT BRG IN-SX	REQRD BRG IN-SX
L	1054	0	1054	0	0	5-8	1-9
G	935	0	935	0	0	MECHANICAL	

A SUITABLE HANGER/MECHANICAL CONNECTION IS REQUIRED AT JOINT G. MINIMUM BEARING LENGTH AT JOINT G = 1-8.

UNFACTORED REACTIONS

JT	1ST LCASE COMBINED	MAX./MIN. COMPONENT REACTIONS SNOW	LIVE	PERM.LIVE	WIND	DEAD	SOIL
L	746	487 / 0	0 / 0	0 / 0	0 / 0	259 / 0	0 / 0
G	663	421 / 0	0 / 0	0 / 0	0 / 0	242 / 0	0 / 0

BEARING MATERIAL TO BE SPF NO.2 OR BETTER AT JOINT(S) L

BRACING
TOP CHORD TO BE SHEATHED OR MAX. PURLIN SPACING = 6.25 FT.
MAX. UNBRACED BOTTOM CHORD LENGTH = 10.00 FT OR RIGID CEILING DIRECTLY APPLIED.

ALL PITCH BREAKS AND PERIMETER CORNER JOINTS MUST BE LATERALLY RESTRAINED.

LOADING
TOTAL LOAD CASES: (4)

CHORDS

MEMB. FR-TO	MAX. FACTORED FORCE (LBS)	FACTORED VERT. LOAD LC1 (PLF) FROM	TO	MAX CSI (LC)	MAX. UNBRAC LENGTH
A- B	0 / 48	-84.9	-84.9	0.12 (1)	10.00
B- C	-675 / 0	-84.9	-84.9	0.30 (1)	6.25
C- D	-577 / 0	-84.9	-84.9	0.43 (1)	6.25
D- E	-577 / 0	-84.9	-84.9	0.43 (1)	6.25
E- F	-494 / 0	-84.9	-84.9	0.12 (1)	6.25
L- B	-1023 / 0	0.0	0.0	0.13 (1)	7.75
G- F	-921 / 0	0.0	0.0	0.31 (1)	7.81
L- K	0 / 0	-18.5	-18.5	0.10 (4)	10.00
K- J	0 / 402	-18.5	-18.5	0.14 (4)	10.00
J- I	0 / 289	-18.5	-18.5	0.13 (4)	10.00
I- H	0 / 289	-18.5	-18.5	0.13 (4)	10.00
H- G	0 / 0	-18.5	-18.5	0.08 (4)	10.00

WEBS

MEMB. FR-TO	MAX. FACTORED FORCE (LBS)	MAX CSI (LC)
K- C	-75 / 46	0.10 (1)
C- J	0 / 306	0.07 (1)
J- D	-565 / 0	0.73 (1)
J- E	0 / 502	0.11 (1)
H- E	-315 / 0	0.41 (1)
B- K	0 / 440	0.10 (1)
H- F	0 / 500	0.11 (1)

DESIGN CRITERIA

SPECIFIED LOADS:

TOP CH.	LL	=	23.3	PSF
	DL	=	6.0	PSF
BOT CH.	LL	=	0.0	PSF
	DL	=	7.4	PSF
TOTAL LOAD		=	36.7	PSF

SPACING = 24.0 IN. C/C

LOADING IN FLAT SECTION BASED ON A SLOPE OF 2.00/12 MINIMUM

THIS TRUSS IS DESIGNED FOR RESIDENTIAL OR SMALL BUILDING REQUIREMENTS OF PART 9, NBCC 2010

THIS DESIGN COMPLIES WITH:
- PART 9 OF OBC 2012 , BCBC 2012 , ABC 2014
- CSA 086-09
- TPIC 2011

(55 % OF 27.2 P.S.F. G.S.L. PLUS 8.4 P.S.F. RAIN LOAD) EQUALS 23.3 P.S.F. SPECIFIED ROOF LIVE LOAD

ALLOWABLE DEFL.(LL)= L/360 (0.60")
CALCULATED VERT. DEFL.(LL) = L/ 999 (0.02")
ALLOWABLE DEFL.(TL)= L/360 (0.60")
CALCULATED VERT. DEFL.(TL) = L/ 999 (0.03")

CSI: TC=0.43/1.00 (D-E:1) , BC=0.14/1.00 (J-K:4) , WB=0.73/1.00 (D-J:1) , SSI=0.22/1.00 (C-D:1)

DOL LUMBER=1.00 NAIL=1.00 LS BEND=1.10 COMP=1.10 SHEAR=1.10 TENS= 1.10

COMPANION LIVE LOAD FACTOR = 0.50

TRUSS PLATE MANUFACTURER IS NOT RESPONSIBLE FOR QUALITY CONTROL IN THE TRUSS MANUFACTURING PLANT .

NAIL VALUES

PLATE	GRIP(DRY) (PSI) MAX	MIN	SHEAR (PLI) MAX	MIN	SECTION (PLI) MAX	MIN
MT20	618	354	1667	788	1987	1656

PLATE PLACEMENT TOL. = 0.250 inches

PLATE ROTATION TOL. = 5.0 Deg.

JSI GRIP= 0.87 (H) (INPUT = 0.90)
JSI METAL= 0.29 (B) (INPUT = 1.00)

JOB NAME	TRUSS NAME	QUANTITY	PLY	JOB DESC.	DRWG NO.
313991	H33		1	TRUSS DESC. JT-39002	E-19112521

Alpa Roof Truss, Maple

Version 8.300 S Aug 9 2019 MiTek Industries, Inc. Fri Nov 8 13:11:11 2019 Page 1
ID:VRLqmcIDifiZCj2mk6F92VyQuye-844Loa4IAH8FU_gJ_lIEk6dsf8_gML?4dWjkokyLFH_

Scale = 1:59.5

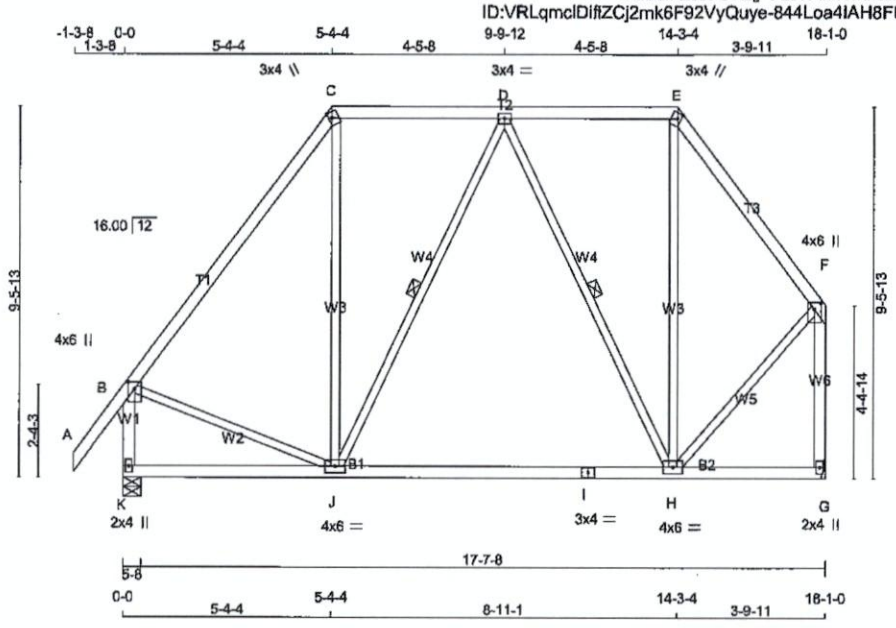

TOTAL WEIGHT = 98 lb

[M][F]

LUMBER

N. L. G. A. RULES

CHORDS	SIZE		LUMBER	DESCR.
A - C	2x4	DRY	No.2	SPF
C - E	2x4	DRY	No.2	SPF
E - F	2x4	DRY	No.2	SPF
K - B	2x4	DRY	No.2	SPF
G - F	2x4	DRY	No.2	SPF
K - I	2x4	DRY	No.2	SPF
I - G	2x4	DRY	No.2	SPF
ALL WEBS EXCEPT	2x3	DRY	No.2	SPF

DRY: SEASONED LUMBER.

PLATES (table is in inches)

JT	TYPE	PLATES	W	LEN	Y	X
B	TMVW+p	MT20	4.0	6.0	2.00	2.00
C	TTW+m	MT20	3.0	4.0	1.75	1.00
D	TMWW-t	MT20	3.0	4.0		
E	TTW+m	MT20	3.0	4.0	1.75	1.00
F	TMVW+p	MT20	4.0	6.0	2.00	2.00
G	BMV1+p	MT20	2.0	4.0		
H	BMWWW-t	MT20	4.0	6.0		
I	BS-t	MT20	3.0	4.0		
J	BMWWW-t	MT20	4.0	6.0		
K	BMV1+p	MT20	2.0	4.0		

NOTE: Lateral brace(s) shown shall be 2x4 SPF #2

LICENSED PROFESSIONAL ENGINEER
11/08/2019
R. TURENNE
100157040
PROVINCE OF ONTARIO

DIMENSIONS, SUPPORTS AND LOADINGS SPECIFIED BY FABRICATOR TO BE VERIFIED BY BUILDING DESIGNER

BEARINGS

JT	FACTORED GROSS REACTION VERT	HORZ	MAXIMUM FACTORED GROSS REACTION DOWN	HORZ	UPLIFT	INPUT BRG IN-SX	REQRD BRG IN-SX
K	1054	0	1054	0	0	5-8	1-9
G	935	0	935	0	0	MECHANICAL	

A SUITABLE HANGER/MECHANICAL CONNECTION IS REQUIRED AT JOINT G. MINIMUM BEARING LENGTH AT JOINT G = 1-8.

UNFACTORED REACTIONS

JT	1ST LCASE COMBINED	MAX./MIN. COMPONENT REACTIONS SNOW	LIVE	PERM.LIVE	WIND	DEAD	SOIL
K	746	487 / 0	0 / 0	0 / 0	0 / 0	259 / 0	0 / 0
G	663	421 / 0	0 / 0	0 / 0	0 / 0	242 / 0	0 / 0

BEARING MATERIAL TO BE SPF NO.2 OR BETTER AT JOINT(S) K

BRACING

TOP CHORD TO BE SHEATHED OR MAX. PURLIN SPACING = 6.25 FT.
MAX. UNBRACED BOTTOM CHORD LENGTH = 10.00 FT OR RIGID CEILING DIRECTLY APPLIED.

ALL PITCH BREAKS AND PERIMETER CORNER JOINTS MUST BE LATERALLY RESTRAINED.

1 LATERAL BRACE(S) AT 1/ 2 LENGTH OF D-J, D-H.

END VERTICAL(S) MUST BE SHEATHED OR HAVE BRACES AS INDICATED IN THE MAX. UNBRACED LENGTH COLUMN OF THE TABLE BELOW

LOADING

TOTAL LOAD CASES: (4)

CHORDS

MEMB. FR-TO	MAX. FACTORED FORCE (LBS)	FACTORED VERT. LOAD LC1 (PLF) FROM	TO	MAX CSI (LC)	MAX. UNBRAC LENGTH
A- B	0 / 48	-84.9	-84.9	0.12 (1)	10.00
B- C	-665 / 0	-84.9	-84.9	0.33 (1)	6.25
C- D	-398 / 0	-84.9	-84.9	0.22 (1)	6.25
D- E	-322 / 0	-84.9	-84.9	0.21 (1)	6.25
E- F	-538 / 0	-84.9	-84.9	0.16 (1)	6.25
K- B	-1022 / 0	0.0	0.0	0.13 (1)	7.75
G- F	-922 / 0	0.0	0.0	0.31 (1)	7.81
K- J	0 / 0	-18.5	-18.5	0.24 (4)	10.00
J- I	0 / 470	-18.5	-18.5	0.28 (4)	10.00
I- H	0 / 470	-18.5	-18.5	0.28 (4)	10.00
H- G	0 / 0	-18.5	-18.5	0.22 (4)	10.00

WEBS

MEMB. FR-TO	MAX. FACTORED FORCE (LBS)	MAX CSI (LC)
J- C	0 / 168	0.04 (4)
J- D	-166 / 0	0.13 (1)
D- H	-345 / 0	0.26 (1)
H- E	0 / 123	0.04 (4)
B- J	0 / 422	0.09 (1)
H- F	0 / 459	0.10 (1)

DESIGN CRITERIA

SPECIFIED LOADS:

TOP CH.	LL	=	23.3	PSF
	DL	=	6.0	PSF
BOT CH.	LL	=	0.0	PSF
	DL	=	7.4	PSF
TOTAL LOAD		=	36.7	PSF

SPACING = 24.0 IN. C/C

LOADING IN FLAT SECTION BASED ON A SLOPE OF 2.00/12 MINIMUM

THIS TRUSS IS DESIGNED FOR RESIDENTIAL OR SMALL BUILDING REQUIREMENTS OF PART 9, NBCC 2010

THIS DESIGN COMPLIES WITH:
- PART 9 OF OBC 2012 , BCBC 2012 , ABC 2014
- CSA 086-09
- TPIC 2011

(55 % OF 27.2 P.S.F. G.S.L. PLUS 8.4 P.S.F. RAIN LOAD) EQUALS 23.3 P.S.F. SPECIFIED ROOF LIVE LOAD

ALLOWABLE DEFL.(LL)= L/360 (0.60")
CALCULATED VERT. DEFL.(LL) = L/ 999 (0.01")
ALLOWABLE DEFL.(TL)= L/360 (0.60")
CALCULATED VERT. DEFL.(TL) = L/ 999 (0.10")

CSI: TC=0.33/1.00 (B-C:1) , BC=0.28/1.00 (H-J:4) , WB=0.26/1.00 (D-H:1) , SSI=0.18/1.00 (C-D:1)

DOL LUMBER=1.00 NAIL=1.00 LS BEND=1.10 COMP=1.10 SHEAR=1.10 TENS= 1.10

COMPANION LIVE LOAD FACTOR = 0.50

TRUSS PLATE MANUFACTURER IS NOT RESPONSIBLE FOR QUALITY CONTROL IN THE TRUSS MANUFACTURING PLANT .

NAIL VALUES

PLATE	GRIP(DRY) (PSI) MAX	MIN	SHEAR (PLI) MAX	MIN	SECTION (PLI) MAX	MIN
MT20	618	354	1667	788	1987	1656

PLATE PLACEMENT TOL. = 0.250 inches

PLATE ROTATION TOL. = 5.0 Deg.

JSI GRIP= 0.84 (J) (INPUT = 0.90)
JSI METAL= 0.29 (B) (INPUT = 1.00)

JOB NAME	TRUSS NAME	QUANTITY	PLY	JOB DESC.	DRWG NO.
313991	H34		1	TRUSS DESC. JT-39002	E-19112522

Alpa Roof Truss, Maple

Version 8.300 S Aug 9 2019 MiTek Industries, Inc. Fri Nov 8 13:11:20 2019 Page 1

ID:VRLqmclDiflZCj2mk6F92VyQuye-Np7IhfBx22Hz4Ns2?8PLc?VP9m3czlCPhPOjcjyLFGr

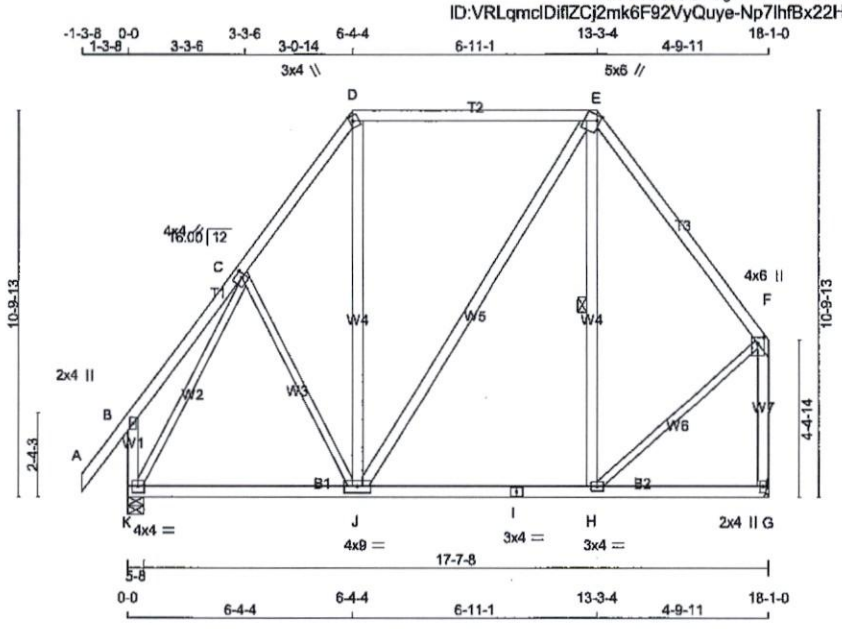

TOTAL WEIGHT = 113 lb

[M][F]

LUMBER

N. L. G. A. RULES

CHORDS	SIZE		LUMBER	DESCR.
A - D	2x4	DRY	No.2	SPF
D - E	2x4	DRY	2100F 1.8E	SPF
E - F	2x4	DRY	No.2	SPF
K - B	2x4	DRY	No.2	SPF
G - F	2x4	DRY	No.2	SPF
K - I	2x4	DRY	No.2	SPF
I - G	2x4	DRY	No.2	SPF
ALL WEBS EXCEPT	2x4	DRY	No.2	SPF
C - J	2x3	DRY	No.2	SPF
K - C	2x3	DRY	No.2	SPF
H - F	2x3	DRY	No.2	SPF

DRY: SEASONED LUMBER.

PLATES (table is in inches)

JT	TYPE	PLATES	W	LEN	Y	X
B	TMV+p	MT20	2.0	4.0		
C	TMWW-t	MT20	4.0	4.0	2.00	1.25
D	TTW+m	MT20	3.0	4.0	1.75	1.00
E	TTWW+m	MT20	5.0	6.0	1.75	1.00
F	TMVW+p	MT20	4.0	6.0	2.00	2.00
G	BMV1+p	MT20	2.0	4.0		
H	BMWW-t	MT20	3.0	4.0		
I	BS-t	MT20	3.0	4.0		
J	BMWWW-t	MT20	4.0	9.0		
K	BMVW1-t	MT20	4.0	4.0		

NOTE: Lateral brace(s) shown shall be 2x4 SPF #2

LICENSED PROFESSIONAL ENGINEER
11/08/2019
R. TURENNE
100157040
PROVINCE OF ONTARIO

DIMENSIONS, SUPPORTS AND LOADINGS SPECIFIED BY FABRICATOR TO BE VERIFIED BY BUILDING DESIGNER

BEARINGS

JT	FACTORED GROSS REACTION VERT	HORZ	MAXIMUM FACTORED GROSS REACTION DOWN	HORZ	UPLIFT	INPUT BRG IN-SX	REQRD BRG IN-SX
K	1054	0	1054	0	0	5-8	1-8
G	935	0	935	0	0	MECHANICAL	

A SUITABLE HANGER/MECHANICAL CONNECTION IS REQUIRED AT JOINT G. MINIMUM BEARING LENGTH AT JOINT G = 1-8.

UNFACTORED REACTIONS

JT	1ST LCASE COMBINED	MAX./MIN. COMPONENT REACTIONS SNOW	LIVE	PERM.LIVE	WIND	DEAD	SOIL
K	746	487 / 0	0 / 0	0 / 0	0 / 0	259 / 0	0 / 0
G	663	421 / 0	0 / 0	0 / 0	0 / 0	242 / 0	0 / 0

BEARING MATERIAL TO BE SPF NO.2 OR BETTER AT JOINT(S) K

BRACING

TOP CHORD TO BE SHEATHED OR MAX. PURLIN SPACING = 6.25 FT.
MAX. UNBRACED BOTTOM CHORD LENGTH = 10.00 FT OR RIGID CEILING DIRECTLY APPLIED.

ALL PITCH BREAKS AND PERIMETER CORNER JOINTS MUST BE LATERALLY RESTRAINED.

1 LATERAL BRACE(S) AT 1/ 2 LENGTH OF E-H.

END VERTICAL(S) MUST BE SHEATHED OR HAVE BRACES AS INDICATED IN THE MAX. UNBRACED LENGTH COLUMN OF THE TABLE BELOW

LOADING

TOTAL LOAD CASES: (4)

CHORDS MEMB. FR-TO	MAX. FACTORED FORCE (LBS)	FACTORED VERT. LOAD LC1 (PLF) FROM	TO	MAX CSI (LC)	MAX. UNBRAC LENGTH
A- B	0 / 48	-84.9	-84.9	0.12 (1)	10.00
B- C	0 / 25	-84.9	-84.9	0.14 (1)	10.00
C- D	-651 / 0	-84.9	-84.9	0.11 (1)	6.25
D- E	-375 / 0	-84.9	-84.9	0.34 (1)	6.25
E- F	-541 / 0	-84.9	-84.9	0.26 (1)	6.25
K- B	-220 / 0	0.0	0.0	0.03 (1)	7.81
G- F	-900 / 0	0.0	0.0	0.31 (1)	7.81
K- J	0 / 400	-18.5	-18.5	0.23 (4)	10.00
J- I	0 / 321	-18.5	-18.5	0.23 (4)	10.00
I- H	0 / 321	-18.5	-18.5	0.23 (4)	10.00
H- G	0 / 0	-18.5	-18.5	0.13 (4)	10.00

WEBS MEMB. FR-TO	MAX. FACTORED FORCE (LBS)	MAX CSI (LC)
C- J	-55 / 12	0.05 (1)
J- D	0 / 111	0.03 (4)
J- E	0 / 99	0.02 (1)
H- E	-147 / 31	0.09 (1)
K- C	-882 / 0	0.78 (1)
H- F	0 / 416	0.09 (1)

DESIGN CRITERIA

SPECIFIED LOADS:

TOP CH.	LL	=	23.3	PSF
	DL	=	6.0	PSF
BOT CH.	LL	=	0.0	PSF
	DL	=	7.4	PSF
TOTAL LOAD		=	36.7	PSF

SPACING = 24.0 IN. C/C

LOADING IN FLAT SECTION BASED ON A SLOPE OF 2.00/12 MINIMUM

THIS TRUSS IS DESIGNED FOR RESIDENTIAL OR SMALL BUILDING REQUIREMENTS OF PART 9, NBCC 2010

THIS DESIGN COMPLIES WITH:
- PART 9 OF OBC 2012 , BCBC 2012 , ABC 2014
- CSA 086-09
- TPIC 2011

(55 % OF 27.2 P.S.F. G.S.L. PLUS 8.4 P.S.F. RAIN LOAD) EQUALS 23.3 P.S.F. SPECIFIED ROOF LIVE LOAD

ALLOWABLE DEFL.(LL)= L/360 (0.60")
CALCULATED VERT. DEFL.(LL) = L/ 999 (0.01")
ALLOWABLE DEFL.(TL)= L/360 (0.60")
CALCULATED VERT. DEFL.(TL) = L/ 999 (0.05")

CSI: TC=0.34/1.00 (D-E:1) , BC=0.23/1.00 (J-K:4) , WB=0.78/1.00 (C-K:1) , SSI=0.23/1.00 (D-E:1)

DOL LUMBER=1.00 NAIL=1.00 LS BEND=1.10 COMP=1.10 SHEAR=1.10 TENS= 1.10

COMPANION LIVE LOAD FACTOR = 0.50

TRUSS PLATE MANUFACTURER IS NOT RESPONSIBLE FOR QUALITY CONTROL IN THE TRUSS MANUFACTURING PLANT .

NAIL VALUES

PLATE	GRIP(DRY) (PSI) MAX	MIN	SHEAR (PLI) MAX	MIN	SECTION (PLI) MAX	MIN
MT20	618	354	1667	788	1987	1656

PLATE PLACEMENT TOL. = 0.250 Inches

PLATE ROTATION TOL. = 5.0 Deg.

JSI GRIP= 0.88 (C) (INPUT = 0.90)
JSI METAL= 0.33 (C) (INPUT = 1.00)

JOB NAME	TRUSS NAME	QUANTITY	PLY	JOB DESC.	DRWG NO.
313991	H35		1	TRUSS DESC. JT-39002	E-19112523

Alpa Roof Truss, Maple

Version 8.300 S Aug 9 2019 MiTek Industries, Inc. Fri Nov 8 12:47:11 2019 Page 1
ID:VRLqmclDiflZCj2mk6F92VyQuye-I23zaCf1IrjZkhaYdKvYNR_ppfW6y6l7UTuXFCyLFdU

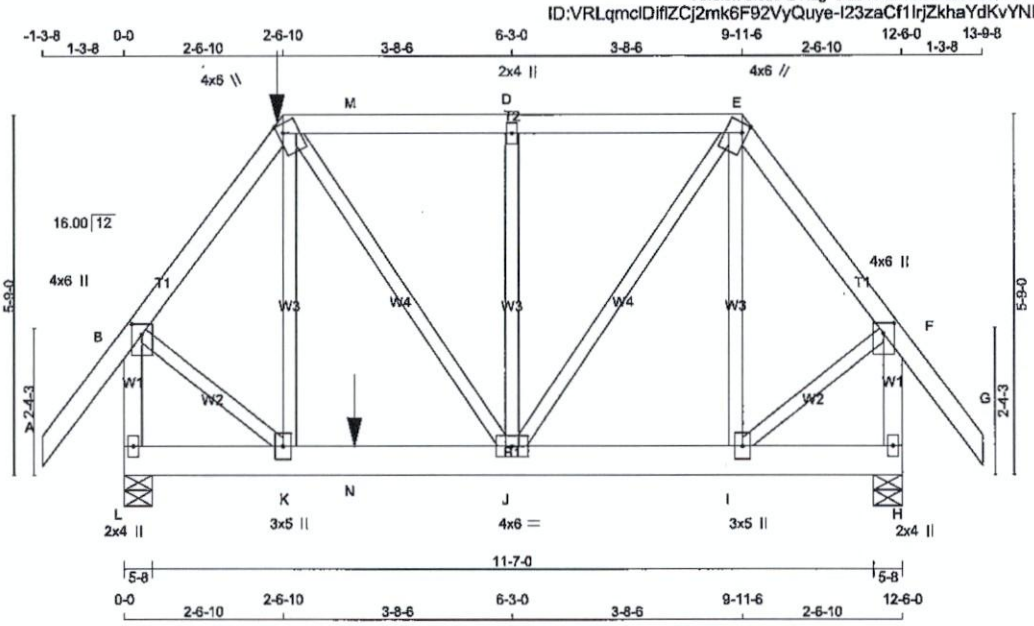

TOTAL WEIGHT = 77 lb

LUMBER
N. L. G. A. RULES

CHORDS	SIZE		LUMBER	DESCR.
A - C	2x4	DRY	No.2	SPF
C - E	2x4	DRY	No.2	SPF
E - G	2x4	DRY	No.2	SPF
L - B	2x4	DRY	No.2	SPF
H - F	2x4	DRY	No.2	SPF
L - H	2x6	DRY	No.2	SPF
ALL WEBS EXCEPT	2x3	DRY	No.2	SPF

DRY: SEASONED LUMBER.

PLATES (table is in inches)

JT	TYPE	PLATES	W	LEN	Y	X
B	TMVW+p	MT20	4.0	6.0	2.00	2.00
C	TTWW+m	MT20	4.0	6.0	1.75	1.00
D	TMW+w	MT20	2.0	4.0		
E	TTWW+m	MT20	4.0	6.0	1.75	1.00
F	TMVW+p	MT20	4.0	6.0	2.00	2.00
H	BMV1+p	MT20	2.0	4.0		
I	BMWW+t	MT20	3.0	5.0		
J	BMWWW-t	MT20	4.0	6.0		
K	BMWW+t	MT20	3.0	5.0		
L	BMV1+p	MT20	2.0	4.0		

NOTE: Lateral brace(s) shown shall be 2x4 SPF #2

LICENSED PROFESSIONAL ENGINEER
11/08/2019
R TURENNE
100157040
PROVINCE OF ONTARIO

DIMENSIONS, SUPPORTS AND LOADINGS SPECIFIED BY FABRICATOR TO BE VERIFIED BY BUILDING DESIGNER

BEARINGS

JT	FACTORED GROSS REACTION VERT	HORZ	MAXIMUM FACTORED GROSS REACTION DOWN	HORZ	UPLIFT	INPUT BRG IN-SX	REQRD BRG IN-SX
L	1242	0	1242	0	0	5-8	1-13
H	945	0	945	0	0	5-8	1-8

UNFACTORED REACTIONS

JT	1ST LCASE COMBINED	MAX./MIN. COMPONENT REACTIONS SNOW	LIVE	PERM.LIVE	WIND	DEAD	SOIL
L	880	569 / 0	0 / 0	0 / 0	0 / 0	311 / 0	0 / 0
H	669	438 / 0	0 / 0	0 / 0	0 / 0	230 / 0	0 / 0

BEARING MATERIAL TO BE SPF NO.2 OR BETTER AT JOINT(S) L, H

BRACING
TOP CHORD TO BE SHEATHED OR MAX. PURLIN SPACING = 6.25 FT.
MAX. UNBRACED BOTTOM CHORD LENGTH = 10.00 FT OR RIGID CEILING DIRECTLY APPLIED.

ALL PITCH BREAKS AND PERIMETER CORNER JOINTS MUST BE LATERALLY RESTRAINED.

LOADING
TOTAL LOAD CASES: (4)

CHORDS

MEMB. FR-TO	MAX. FACTORED FORCE (LBS)	FACTORED VERT. LOAD (PLF) FROM	TO	LC1	MAX CSI (LC)	MAX. UNBRAC LENGTH
A- B	0 / 48	-84.9	-84.9	0.13 (1)	10.00	
B- C	-846 / 0	-84.9	-84.9	0.12 (1)	6.25	
C- M	-624 / 0	-124.6	-124.6	0.22 (1)	6.25	
M- D	-624 / 0	-84.9	-84.9	0.22 (1)	6.25	
D- E	-624 / 0	-84.9	-84.9	0.22 (1)	6.25	
E- F	-568 / 0	-84.9	-84.9	0.11 (1)	6.25	
F- G	0 / 48	-84.9	-84.9	0.13 (1)	10.00	
L- B	-1263 / 0	0.0	0.0	0.17 (1)	7.13	
H- F	-924 / 0	0.0	0.0	0.12 (1)	7.81	
L- K	0 / 0	-27.2	-27.2	0.11 (1)	10.00	
K- N	0 / 506	-27.2	-27.2	0.26 (1)	10.00	
N- J	0 / 506	-18.5	-18.5	0.26 (1)	10.00	
J- I	0 / 334	-18.5	-18.5	0.10 (1)	10.00	
I- H	0 / 0	-18.5	-18.5	0.01 (4)	10.00	

WEBS

MEMB. FR-TO	MAX. FACTORED FORCE (LBS)	MAX CSI (LC)
K- C	0 / 149	0.04 (4)
C- J	0 / 208	0.05 (1)
J- D	-380 / 0	0.18 (1)
J- E	0 / 508	0.13 (1)
I- E	-197 / 0	0.10 (1)
B- K	0 / 616	0.15 (1)
I- F	0 / 414	0.10 (1)

FACTORED CONCENTRATED LOADS (LBS)

JT	LOC.	LC1	MAX-	MAX+	FACE	DIR.	TYPE	HEEL	CONN.
C	2-6-10	-86	-86	—	FRONT	VERT	TOTAL	—	C1
N	3-8-7	-493	-493	—	FRONT	VERT	TOTAL	—	C1

CONNECTION REQUIREMENTS

1) **C1:** A SUITABLE HANGER/MECHANICAL CONNECTION IS REQUIRED.

[M]

DESIGN CRITERIA

*** SPECIAL LOADS ANALYSIS ***
GEOMETRY AND/OR BASIC LOADS CHANGED BY USER.
LOADS WERE DERIVED FROM USER INPUT
NO FURTHER MODIFICATIONS WERE MADE

SPECIFIED LOADS:

TOP	CH.	LL	=	23.3	PSF
		DL	=	6.0	PSF
BOT	CH.	LL	=	0.0	PSF
		DL	=	7.4	PSF
TOTAL	LOAD		=	36.7	PSF

SPACING = 24.0 IN. C/C

LOADING IN FLAT SECTION BASED ON A SLOPE OF 2.00/12 MINIMUM

GIRDER TYPE: CPrimeHip
SIDE SETBACK = 2-6-10
END SETBACK = 3-10-8
END WALL WIDTH = 0-0
CORNER FRAMING TYPE: CONVENTIONAL
END JACK TYPE: CONVENTIONAL
APPLIED TO FRONT SIDE
- ADDT'L LOADS BASED ON 55 % OF GSL.
LOADS APPLIED TO FIRST 3-8-7 OF SPAN MEASURED FROM THE LEFT.

*** NON STANDARD GIRDER ***
ADDT'L USER-DEFINED LOADS APPLIED TO ALL LOAD CASES.

THIS TRUSS IS DESIGNED FOR RESIDENTIAL OR SMALL BUILDING REQUIREMENTS OF PART 9, NBCC 2010

THIS DESIGN COMPLIES WITH:
- PART 9 OF OBC 2012 , BCBC 2012 , ABC 2014
- CSA 086-09
- TPIC 2011

(55 % OF 27.2 P.S.F. G.S.L. PLUS 8.4 P.S.F. RAIN LOAD) EQUALS 23.3 P.S.F. SPECIFIED ROOF LIVE LOAD

ALLOWABLE DEFL.(LL)= L/360 (0.42")
CALCULATED VERT. DEFL.(LL) = L/ 999 (0.01")
ALLOWABLE DEFL.(TL)= L/360 (0.42")
CALCULATED VERT. DEFL.(TL) = L/ 999 (0.03")

CSI: TC=0.22/1.00 (C-D:1) , BC=0.26/1.00 (J-K:1) , WB=0.18/1.00 (D-J:1) , SSI=0.27/1.00 (J-K:1)

DOL LUMBER=1.00 NAIL=1.00 LS BEND=1.00 COMP=1.00 SHEAR=1.00 TENS= 1.00

COMPANION LIVE LOAD FACTOR = 0.50

TRUSS PLATE MANUFACTURER IS NOT RESPONSIBLE FOR QUALITY CONTROL IN THE TRUSS MANUFACTURING PLANT .

CONTINUED ON PAGE 2

JOB NAME	TRUSS NAME	QUANTITY	PLY	JOB DESC.	DRWG NO.
313991	H36		1	TRUSS DESC. JT-39002	E-19112524

Alpa Roof Truss, Maple

Version 8.300 S Aug 9 2019 MiTek Industries, Inc. Fri Nov 8 13:11:25 2019 Page 1
ID:VRLqmcIDiflZCj2mk6F92VyQuye-jnwekNF4tavFA8k?oi?WJ3CHznpseke8rh6THxyLFGm

Scale = 1:49.1

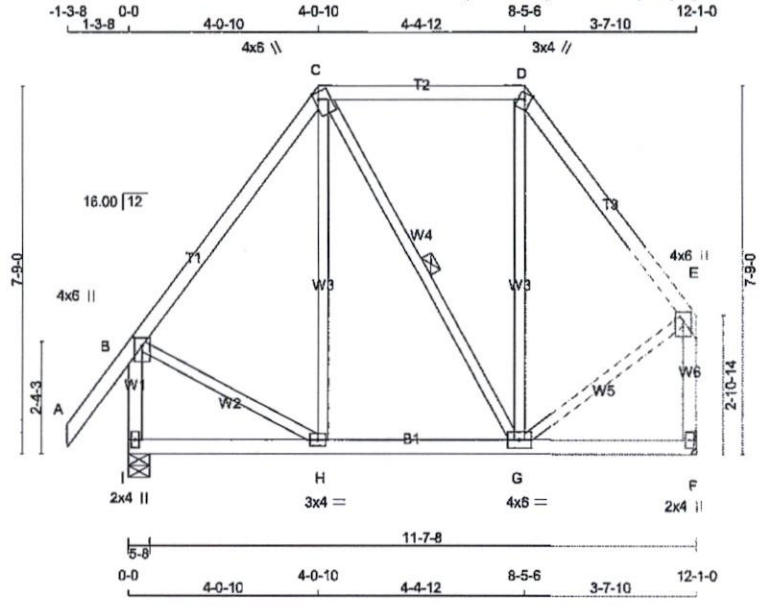

TOTAL WEIGHT = 67 lb

[M][F]

LUMBER
N. L. G. A. RULES

CHORDS	SIZE		LUMBER	DESCR.
A - C	2x4	DRY	No.2	SPF
C - D	2x4	DRY	No.2	SPF
D - E	2x4	DRY	No.2	SPF
I - B	2x4	DRY	No.2	SPF
F - E	2x4	DRY	No.2	SPF
I - F	2x4	DRY	No.2	SPF
ALL WEBS EXCEPT	2x3	DRY	No.2	SPF

DRY: SEASONED LUMBER.

PLATES (table is in inches)

JT	TYPE	PLATES	W	LEN	Y	X
B	TMVW+p	MT20	4.0	6.0	2.00	2.00
C	TTWW+m	MT20	4.0	6.0	1.75	1.00
D	TTW+m	MT20	3.0	4.0	Edge	
E	TMVW+p	MT20	4.0	6.0	2.00	2.00
F	BMV1+p	MT20	2.0	4.0		
G	BMWWW-t	MT20	4.0	6.0		
H	BMWW-t	MT20	3.0	4.0		
I	BMV1+p	MT20	2.0	4.0		

Edge - INDICATES REFERENCE CORNER OF PLATE TOUCHES EDGE OF CHORD.

NOTE: Lateral brace(s) shown shall be 2x4 SPF #2

DIMENSIONS, SUPPORTS AND LOADINGS SPECIFIED BY FABRICATOR TO BE VERIFIED BY BUILDING DESIGNER

BEARINGS

JT	FACTORED GROSS REACTION VERT	HORZ	MAXIMUM FACTORED GROSS REACTION DOWN	HORZ	UPLIFT	INPUT BRG	REQRD BRG
I	744	0	744	0	0	5-8	1-8
F	624	0	624	0	0	MECHANICAL	

A SUITABLE HANGER/MECHANICAL CONNECTION IS REQUIRED AT JOINT F. MINIMUM BEARING LENGTH AT JOINT F = 1-8.

UNFACTORED REACTIONS

JT	1ST LCASE COMBINED	MAX./MIN. COMPONENT REACTIONS SNOW	LIVE	PERM.LIVE	WIND	DEAD	SOIL
I	526	347 / 0	0 / 0	0 / 0	0 / 0	179 / 0	0 / 0
F	443	281 / 0	0 / 0	0 / 0	0 / 0	162 / 0	0 / 0

BEARING MATERIAL TO BE SPF NO.2 OR BETTER AT JOINT(S) I

BRACING

TOP CHORD TO BE SHEATHED OR MAX. PURLIN SPACING = 6.25 FT.
MAX. UNBRACED BOTTOM CHORD LENGTH = 10.00 FT OR RIGID CEILING DIRECTLY APPLIED.

ALL PITCH BREAKS AND PERIMETER CORNER JOINTS MUST BE LATERALLY RESTRAINED.

1 LATERAL BRACE(S) AT 1/ 2 LENGTH OF C-G.

END VERTICAL(S) MUST BE SHEATHED OR HAVE BRACES AS INDICATED IN THE MAX. UNBRACED LENGTH COLUMN OF THE TABLE BELOW

LOADING

TOTAL LOAD CASES: (4)

CHORDS

MEMB. FR-TO	MAX. FACTORED FORCE (LBS)	FACTORED VERT. LOAD LC1 (PLF) FROM	TO	MAX CSI (LC)	MAX. UNBRAC LENGTH
A- B	0 / 48	-84.9	-84.9	0.12 (1)	10.00
B- C	-389 / 0	-84.9	-84.9	0.18 (1)	6.25
C- D	-218 / 0	-84.9	-84.9	0.21 (1)	6.25
D- E	-368 / 0	-84.9	-84.9	0.15 (1)	6.25
I- B	-713 / 0	0.0	0.0	0.09 (1)	7.81
F- E	-597 / 0	0.0	0.0	0.09 (1)	7.81
I- H	0 / 0	-18.5	-18.5	0.07 (4)	10.00
H- G	0 / 232	-18.5	-18.5	0.10 (4)	10.00
G- F	0 / 0	-18.5	-18.5	0.06 (4)	10.00

WEBS

MEMB. FR-TO	MAX. FACTORED FORCE (LBS)	MAX CSI (LC)
H- C	-24 / 55	0.03 (1)
C- G	-26 / 0	0.01 (1)
G- D	-46 / 43	0.05 (1)
B- H	0 / 256	0.06 (1)
G- E	0 / 264	0.06 (1)

DESIGN CRITERIA

SPECIFIED LOADS:

TOP CH.	LL =	23.3	PSF
	DL =	6.0	PSF
BOT CH.	LL =	0.0	PSF
	DL =	7.4	PSF
TOTAL LOAD	=	36.7	PSF

SPACING = 24.0 IN. C/C

LOADING IN FLAT SECTION BASED ON A SLOPE OF 2.00/12 MINIMUM

THIS TRUSS IS DESIGNED FOR RESIDENTIAL OR SMALL BUILDING REQUIREMENTS OF PART 9, NBCC 2010

THIS DESIGN COMPLIES WITH:
- PART 9 OF OBC 2012 , BCBC 2012 , ABC 2014
- CSA 086-09
- TPIC 2011

(55 % OF 27.2 P.S.F. G.S.L. PLUS 8.4 P.S.F. RAIN LOAD) EQUALS 23.3 P.S.F. SPECIFIED ROOF LIVE LOAD

ALLOWABLE DEFL.(LL)= L/360 (0.40")
CALCULATED VERT. DEFL.(LL) = L/ 999 (0.00")
ALLOWABLE DEFL.(TL)= L/360 (0.40")
CALCULATED VERT. DEFL.(TL) = L/ 999 (0.01")

CSI: TC=0.21/1.00 (C-D:1) , BC=0.10/1.00 (G-H:4) , WB=0.06/1.00 (E-G:1) , SSI=0.15/1.00 (C-D:1)

DOL LUMBER=1.00 NAIL=1.00 LS BEND=1.10 COMP=1.10 SHEAR=1.10 TENS= 1.10

COMPANION LIVE LOAD FACTOR = 0.50

TRUSS PLATE MANUFACTURER IS NOT RESPONSIBLE FOR QUALITY CONTROL IN THE TRUSS MANUFACTURING PLANT .

NAIL VALUES

PLATE	GRIP(DRY) (PSI) MAX	MIN	SHEAR (PLI) MAX	MIN	SECTION (PLI) MAX	MIN
MT20	618	354	1667	788	1987	1656

PLATE PLACEMENT TOL. = 0.250 inches

PLATE ROTATION TOL. = 5.0 Deg.

JSI GRIP= 0.79 (D) (INPUT = 0.90)
JSI METAL= 0.19 (B) (INPUT = 1.00)

JOB NAME	TRUSS NAME	QUANTITY	PLY	JOB DESC.	DRWG NO.
313991	H37		1	TRUSS DESC. JT-39002	E-19112525

Alpa Roof Truss, Maple

Version 8.300 S Aug 9 2019 MiTek Industries, Inc. Fri Nov 8 13:11:31 2019 Page 1

ID:VRLqmclDiflZCj2mk6F92VyQuye-YwHv?QKqTQgPu3B99y6wYKSHSCrU2SG1DdZoUayLFGg

Scale = 1:61.3

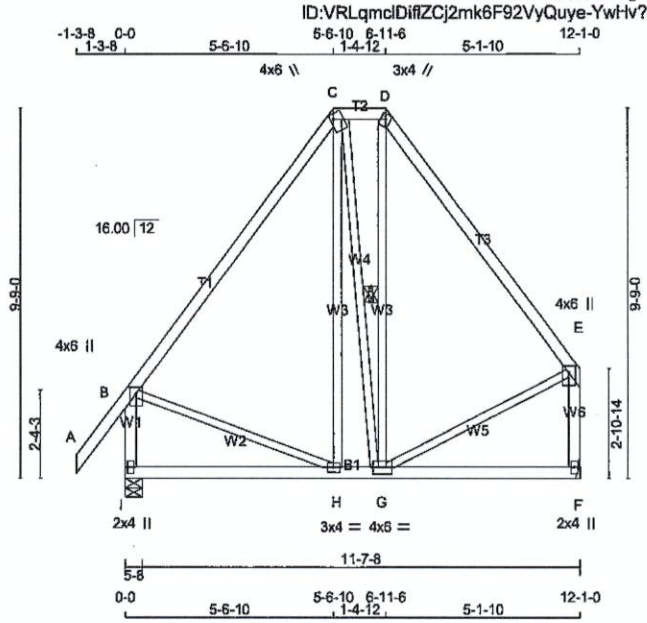

TOTAL WEIGHT = 76 lb

[M][F]

LUMBER

N. L. G. A. RULES

CHORDS	SIZE		LUMBER	DESCR.
A - C	2x4	DRY	No.2	SPF
C - D	2x4	DRY	No.2	SPF
D - E	2x4	DRY	No.2	SPF
I - B	2x4	DRY	No.2	SPF
F - E	2x4	DRY	No.2	SPF
I - F	2x4	DRY	No.2	SPF
ALL WEBS EXCEPT	2x3	DRY	No.2	SPF

DRY: SEASONED LUMBER.

PLATES (table is in Inches)

JT	TYPE	PLATES	W	LEN	Y	X
B	TMVW+p	MT20	4.0	6.0	2.00	2.00
C	TTWW+m	MT20	4.0	6.0	1.75	1.00
D	TTW+m	MT20	3.0	4.0	Edge	
E	TMVW+p	MT20	4.0	6.0	2.00	2.00
F	BMV1+p	MT20	2.0	4.0		
G	BMWWW-t	MT20	4.0	6.0		
H	BMWW-t	MT20	3.0	4.0		
I	BMV1+p	MT20	2.0	4.0		

Edge - INDICATES REFERENCE CORNER OF PLATE TOUCHES EDGE OF CHORD.

NOTE: Lateral brace(s) shown shall be 2x4 SPF #2

LICENSED PROFESSIONAL ENGINEER
11/08/2019
R. TURINNE
100157040
PROVINCE OF ONTARIO

DIMENSIONS, SUPPORTS AND LOADINGS SPECIFIED BY FABRICATOR TO BE VERIFIED BY BUILDING DESIGNER

BEARINGS

JT	FACTORED GROSS REACTION VERT	HORZ	MAXIMUM FACTORED GROSS REACTION DOWN	HORZ	UPLIFT	INPUT BRG IN-SX	REQRD BRG IN-SX
I	744	0	744	0	0	5-8	1-8
F	624	0	624	0	0	MECHANICAL	

A SUITABLE HANGER/MECHANICAL CONNECTION IS REQUIRED AT JOINT F. MINIMUM BEARING LENGTH AT JOINT F = 1-8.

UNFACTORED REACTIONS

MAX./MIN. COMPONENT REACTIONS

JT	1ST LCASE COMBINED	SNOW	LIVE	PERM.LIVE	WIND	DEAD	SOIL
I	526	347 / 0	0 / 0	0 / 0	0 / 0	179 / 0	0 / 0
F	443	281 / 0	0 / 0	0 / 0	0 / 0	162 / 0	0 / 0

BEARING MATERIAL TO BE SPF NO.2 OR BETTER AT JOINT(S) I

BRACING

TOP CHORD TO BE SHEATHED OR MAX. PURLIN SPACING = 6.25 FT.
MAX. UNBRACED BOTTOM CHORD LENGTH = 10.00 FT OR RIGID CEILING DIRECTLY APPLIED.

ALL PITCH BREAKS AND PERIMETER CORNER JOINTS MUST BE LATERALLY RESTRAINED.

1 LATERAL BRACE(S) AT 1/ 2 LENGTH OF C-G, D-G.

END VERTICAL(S) MUST BE SHEATHED OR HAVE BRACES AS INDICATED IN THE MAX. UNBRACED LENGTH COLUMN OF THE TABLE BELOW

LOADING

TOTAL LOAD CASES: (4)

CHORDS

MEMB. FR-TO	MAX. FACTORED FORCE (LBS)	FACTORED VERT. LOAD LC1 (PLF) FROM	TO	MAX CSI (LC)	MAX. UNBRAC LENGTH
A- B	0 / 48	-84.9	-84.9	0.12 (1)	10.00
B- C	-343 / 0	-84.9	-84.9	0.34 (1)	6.25
C- D	-201 / 0	-84.9	-84.9	0.02 (1)	6.25
D- E	-337 / 0	-84.9	-84.9	0.29 (1)	6.25
I- B	-701 / 0	0.0	0.0	0.09 (1)	7.81
F- E	-585 / 0	0.0	0.0	0.09 (1)	7.81
I- H	0 / 0	-18.5	-18.5	0.13 (4)	10.00
H- G	0 / 205	-18.5	-18.5	0.15 (4)	10.00
G- F	0 / 0	-18.5	-18.5	0.11 (4)	10.00

WEBS

MEMB. FR-TO	MAX. FACTORED FORCE (LBS)	MAX CSI (LC)
H- C	0 / 60	0.02 (4)
C- G	-28 / 0	0.02 (1)
G- D	-7 / 48	0.02 (4)
B- H	0 / 217	0.05 (1)
G- E	0 / 223	0.05 (1)

DESIGN CRITERIA

SPECIFIED LOADS:

TOP CH.	LL =	23.3	PSF
	DL =	6.0	PSF
BOT CH.	LL =	0.0	PSF
	DL =	7.4	PSF
TOTAL LOAD	=	36.7	PSF

SPACING = 24.0 IN. C/C

LOADING IN FLAT SECTION BASED ON A SLOPE OF 2.00/12 MINIMUM

THIS TRUSS IS DESIGNED FOR RESIDENTIAL OR SMALL BUILDING REQUIREMENTS OF PART 9, NBCC 2010

THIS DESIGN COMPLIES WITH:
- PART 9 OF OBC 2012 , BCBC 2012 , ABC 2014
- CSA 086-09
- TPIC 2011

(55 % OF 27.2 P.S.F. G.S.L. PLUS 8.4 P.S.F. RAIN LOAD) EQUALS 23.3 P.S.F. SPECIFIED ROOF LIVE LOAD

ALLOWABLE DEFL.(LL)= L/360 (0.40")
CALCULATED VERT. DEFL.(LL) = L/ 999 (0.00")
ALLOWABLE DEFL.(TL)= L/360 (0.40")
CALCULATED VERT. DEFL.(TL) = L/ 999 (0.03")

CSI: TC=0.34/1.00 (B-C:1) , BC=0.15/1.00 (G-H:4) , WB=0.05/1.00 (E-G:1) , SSI=0.11/1.00 (B-C:1)

DOL LUMBER=1.00 NAIL=1.00 LS BEND=1.10 COMP=1.10 SHEAR=1.10 TENS= 1.10

COMPANION LIVE LOAD FACTOR = 0.50

TRUSS PLATE MANUFACTURER IS NOT RESPONSIBLE FOR QUALITY CONTROL IN THE TRUSS MANUFACTURING PLANT .

NAIL VALUES

PLATE	GRIP(DRY) (PSI) MAX	MIN	SHEAR (PLI) MAX	MIN	SECTION (PLI) MAX	MIN
MT20	618	354	1667	788	1987	1656

PLATE PLACEMENT TOL. = 0.250 inches

PLATE ROTATION TOL. = 5.0 Deg.

JSI GRIP= 0.45 (D) (INPUT = 0.90)
JSI METAL= 0.20 (B) (INPUT = 1.00)

JOB NAME	TRUSS NAME	QUANTITY	PLY	JOB DESC.	DRWG NO.
313991	H38		1	TRUSS DESC. JT-39002	E-19112526

Alpa Roof Truss, Maple

Version 8.300 S Aug 9 2019 MiTek Industries, Inc. Fri Nov 8 13:11:37 2019 Page 1
ID:VRLqmclDiflZCj2mk6F92VyQuye-N4eAFTPb2GQYc_fJVDDKobiLPctqR3MvbZ06iEyLFGa

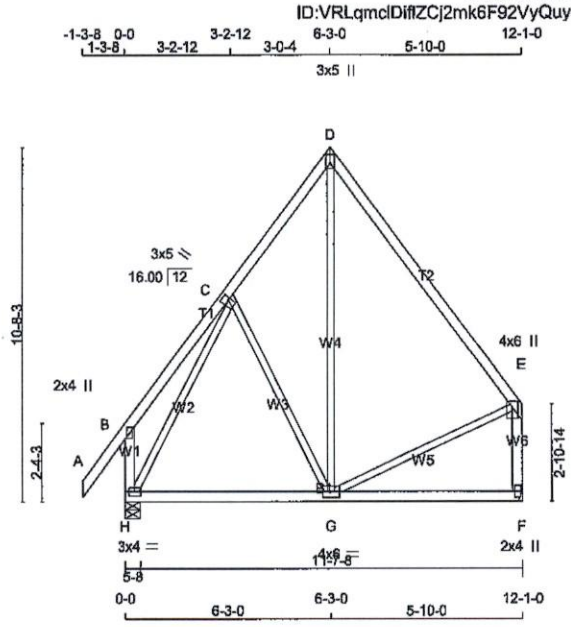

TOTAL WEIGHT = 69 lb

[M][F]

LUMBER
N. L. G. A. RULES

CHORDS	SIZE		LUMBER	DESCR.
A - D	2x4	DRY	No.2	SPF
D - E	2x4	DRY	2100F 1.8E	SPF
H - B	2x4	DRY	No.2	SPF
F - E	2x4	DRY	No.2	SPF
H - F	2x4	DRY	No.2	SPF
ALL WEBS EXCEPT	2x3	DRY	No.2	SPF

DRY: SEASONED LUMBER.

PLATES (table is in inches)

JT	TYPE	PLATES	W	LEN	Y	X
B	TMV+p	MT20	2.0	4.0		
C	TMWW+t	MT20	3.0	5.0	2.25	0.75
D	TTW+p	MT20	3.0	5.0	2.00	Edge
E	TMVW+p	MT20	4.0	6.0	2.00	2.00
F	BMV1+p	MT20	2.0	4.0		
G	BMWWW-t	MT20	4.0	6.0		
H	BMVW1-t	MT20	3.0	4.0		

Edge - INDICATES REFERENCE CORNER OF PLATE TOUCHES EDGE OF CHORD.

NOTE: Lateral brace(s) shown shall be 2x4 SPF #2

LICENSED PROFESSIONAL ENGINEER
11/08/2019
B. TURENNE
100157040
PROVINCE OF ONTARIO

DIMENSIONS, SUPPORTS AND LOADINGS SPECIFIED BY FABRICATOR TO BE VERIFIED BY BUILDING DESIGNER

BEARINGS

JT	FACTORED GROSS REACTION VERT	HORZ	MAXIMUM FACTORED GROSS REACTION DOWN	HORZ	UPLIFT	INPUT BRG IN-SX	REQRD BRG IN-SX
F	624	0	624	0	0	MECHANICAL	
H	744	0	744	0	0	5-8	1-8

A SUITABLE HANGER/MECHANICAL CONNECTION IS REQUIRED AT JOINT F. MINIMUM BEARING LENGTH AT JOINT F = 1-8.

UNFACTORED REACTIONS

JT	1ST LCASE COMBINED	MAX./MIN. COMPONENT REACTIONS SNOW	LIVE	PERM.LIVE	WIND	DEAD	SOIL
F	443	281 / 0	0 / 0	0 / 0	0 / 0	162 / 0	0 / 0
H	526	347 / 0	0 / 0	0 / 0	0 / 0	179 / 0	0 / 0

BEARING MATERIAL TO BE SPF NO.2 OR BETTER AT JOINT(S) H

BRACING
TOP CHORD TO BE SHEATHED OR MAX. PURLIN SPACING = 6.25 FT.
MAX. UNBRACED BOTTOM CHORD LENGTH = 10.00 FT OR RIGID CEILING DIRECTLY APPLIED.

ALL PITCH BREAKS AND PERIMETER CORNER JOINTS MUST BE LATERALLY RESTRAINED.

LOADING
TOTAL LOAD CASES: (4)

CHORDS

MEMB. FR-TO	MAX. FACTORED FORCE (LBS)	FACTORED VERT. LOAD (PLF) FROM	TO	LC1 MAX CSI (LC)	MAX. UNBRAC LENGTH
A- B	0 / 48	-84.9	-84.9	0.12 (1)	10.00
B- C	0 / 25	-84.9	-84.9	0.14 (1)	10.00
C- D	-342 / 0	-84.9	-84.9	0.10 (1)	6.25
D- E	-318 / 0	-84.9	-84.9	0.25 (1)	6.25
H- B	-218 / 0	0.0	0.0	0.03 (1)	7.81
F- E	-584 / 0	0.0	0.0	0.09 (1)	7.81
H- G	0 / 244	-18.5	-18.5	0.21 (4)	10.00
G- F	0 / 0	-18.5	-18.5	0.19 (4)	10.00

WEBS

MEMB. FR-TO	MAX. FACTORED FORCE (LBS)	MAX CSI (LC)
C- G	-113 / 0	0.10 (1)
G- D	0 / 156	0.05 (4)
H- C	-540 / 0	0.46 (1)
G- E	0 / 208	0.05 (1)

DESIGN CRITERIA

SPECIFIED LOADS:

TOP CH.	LL =	23.3	PSF
	DL =	6.0	PSF
BOT CH.	LL =	0.0	PSF
	DL =	7.4	PSF
TOTAL LOAD	=	36.7	PSF

SPACING = 24.0 IN. C/C

THIS TRUSS IS DESIGNED FOR RESIDENTIAL OR SMALL BUILDING REQUIREMENTS OF PART 9, NBCC 2010

THIS DESIGN COMPLIES WITH:
- PART 9 OF OBC 2012 , BCBC 2012 , ABC 2014
- CSA 086-09
- TPIC 2011

(55 % OF 27.2 P.S.F. G.S.L. PLUS 8.4 P.S.F. RAIN LOAD) EQUALS 23.3 P.S.F. SPECIFIED ROOF LIVE LOAD

ALLOWABLE DEFL.(LL)= L/360 (0.40")
CALCULATED VERT. DEFL.(LL) = L/ 999 (0.01")
ALLOWABLE DEFL.(TL)= L/360 (0.40")
CALCULATED VERT. DEFL.(TL) = L/ 999 (0.04")

CSI: TC=0.25/1.00 (D-E:1) , BC=0.21/1.00 (G-H:4) , WB=0.46/1.00 (C-H:1) , SSI=0.12/1.00 (D-E:1)

DOL LUMBER=1.00 NAIL=1.00 LS BEND=1.10 COMP=1.10 SHEAR=1.10 TENS= 1.10

COMPANION LIVE LOAD FACTOR = 0.50

TRUSS PLATE MANUFACTURER IS NOT RESPONSIBLE FOR QUALITY CONTROL IN THE TRUSS MANUFACTURING PLANT.

NAIL VALUES

PLATE	GRIP(DRY) (PSI) MAX	MIN	SHEAR (PLI) MAX	MIN	SECTION (PLI) MAX	MIN
MT20	618	354	1667	788	1987	1656

PLATE PLACEMENT TOL. = 0.250 inches

PLATE ROTATION TOL. = 5.0 Deg.

JSI GRIP= 0.73 (C) (INPUT = 0.90)
JSI METAL= 0.34 (C) (INPUT = 1.00)

JOB NAME	TRUSS NAME	QUANTITY	PLY	JOB DESC.	DRWG NO.
313991	H39T	1	1	TRUSS DESC. JT-39002	E-19112527

Alpa Roof Truss, Maple

Version 8.300 S Aug 9 2019 MiTek Industries, Inc. Fri Nov 8 13:11:42 2019 Page 1
ID:VRLqmcIDifIZCj2mk6F92VyQuye-k2S3IBTktp2rjIXGImoVVePBmdcl6Q6elqjtNRyLFGV

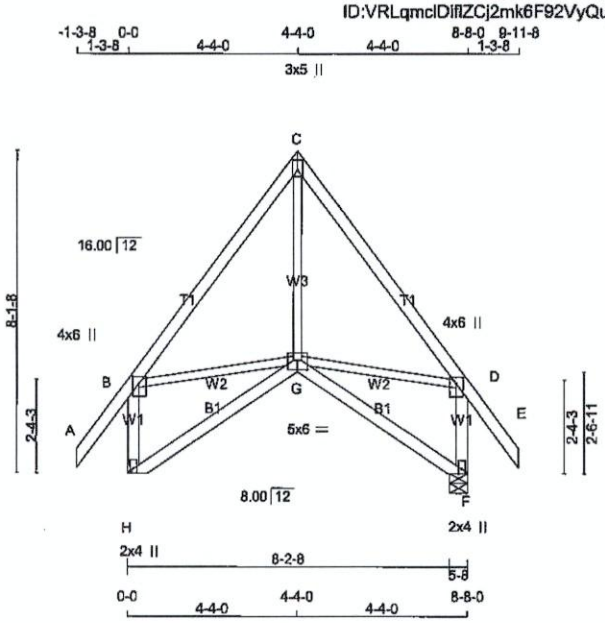

TOTAL WEIGHT = 2 X 50 = 99 lb

[M][F]

LUMBER

N. L. G. A. RULES

CHORDS	SIZE		LUMBER	DESCR.
A - C	2x4	DRY	No.2	SPF
C - E	2x4	DRY	No.2	SPF
H - B	2x4	DRY	No.2	SPF
F - D	2x4	DRY	No.2	SPF
H - G	2x4	DRY	No.2	SPF
G - F	2x4	DRY	No.2	SPF
ALL WEBS EXCEPT	2x3	DRY	No.2	SPF

DRY: SEASONED LUMBER.

PLATES (table is in inches)

JT	TYPE	PLATES	W	LEN	Y	X
B	TMVW+p	MT20	4.0	6.0	2.00	2.00
C	TTW+p	MT20	3.0	5.0	2.00	Edge
D	TMVW+p	MT20	4.0	6.0	2.00	2.00
F	BMV1+p	MT20	2.0	4.0	Edge	
G	BBWWW-p	MT20	5.0	6.0	2.75	3.00
H	BMV1+p	MT20	2.0	4.0	Edge	

Edge - INDICATES REFERENCE CORNER OF PLATE TOUCHES EDGE OF CHORD.

NOTE: Lateral brace(s) shown shall be 2x4 SPF #2

LICENSED PROFESSIONAL ENGINEER
11/08/2019
R. TURENNE
100157040
PROVINCE OF ONTARIO

DIMENSIONS, SUPPORTS AND LOADINGS SPECIFIED BY FABRICATOR TO BE VERIFIED BY BUILDING DESIGNER

BEARINGS

JT	FACTORED GROSS REACTION VERT	HORZ	MAXIMUM FACTORED GROSS REACTION DOWN	HORZ	UPLIFT	INPUT BRG IN-SX	REQRD BRG IN-SX
H	567	0	567	0	0	MECHANICAL	
F	567	0	567	0	0	5-8	1-8

A SUITABLE HANGER/MECHANICAL CONNECTION IS REQUIRED AT JOINT H. MINIMUM BEARING LENGTH AT JOINT H = 1-8.

UNFACTORED REACTIONS

JT	1ST LCASE COMBINED	MAX./MIN. COMPONENT REACTIONS SNOW	LIVE	PERM.LIVE	WIND	DEAD	SOIL
H	400	267 / 0	0 / 0	0 / 0	0 / 0	133 / 0	0 / 0
F	400	267 / 0	0 / 0	0 / 0	0 / 0	133 / 0	0 / 0

BEARING MATERIAL TO BE SPF NO.2 OR BETTER AT JOINT(S) F

BRACING

TOP CHORD TO BE SHEATHED OR MAX. PURLIN SPACING = 6.25 FT.
MAX. UNBRACED BOTTOM CHORD LENGTH = 10.00 FT OR RIGID CEILING DIRECTLY APPLIED.

ALL PITCH BREAKS AND PERIMETER CORNER JOINTS MUST BE LATERALLY RESTRAINED.

LOADING

TOTAL LOAD CASES: (4)

CHORDS

MEMB. FR-TO	MAX. FACTORED FORCE (LBS)	FACTORED VERT. LOAD LC1 (PLF) FROM	TO	MAX CSI (LC)	MAX. UNBRAC LENGTH
A- B	0 / 48	-84.9	-84.9	0.12 (1)	10.00
B- C	-314 / 0	-84.9	-84.9	0.21 (1)	6.25
C- D	-314 / 0	-84.9	-84.9	0.21 (1)	6.25
D- E	0 / 48	-84.9	-84.9	0.12 (1)	10.00
H- B	-527 / 0	0.0	0.0	0.07 (1)	7.81
F- D	-527 / 0	0.0	0.0	0.07 (1)	7.81
H- G	0 / 0	-18.5	-18.5	0.10 (4)	10.00
G- F	0 / 0	-18.5	-18.5	0.10 (4)	10.00

WEBS

MEMB. FR-TO	MAX. FACTORED FORCE (LBS)	MAX CSI (LC)
G- C	0 / 134	0.04 (4)
B- G	0 / 190	0.04 (1)
G- D	0 / 190	0.04 (1)

DESIGN CRITERIA

SPECIFIED LOADS:

TOP CH.	LL =	23.3	PSF
	DL =	6.0	PSF
BOT CH.	LL =	0.0	PSF
	DL =	7.4	PSF
TOTAL LOAD	=	36.7	PSF

SPACING = 24.0 IN. C/C

THIS TRUSS IS DESIGNED FOR RESIDENTIAL OR SMALL BUILDING REQUIREMENTS OF PART 9, NBCC 2010

THIS DESIGN COMPLIES WITH:
- PART 9 OF OBC 2012 , BCBC 2012 , ABC 2014
- CSA 086-09
- TPIC 2011

(55 % OF 27.2 P.S.F. G.S.L. PLUS 8.4 P.S.F. RAIN LOAD) EQUALS 23.3 P.S.F. SPECIFIED ROOF LIVE LOAD

ALLOWABLE DEFL.(LL)= L/360 (0.29")
CALCULATED VERT. DEFL.(LL) = L/ 999 (0.00")
ALLOWABLE DEFL.(TL)= L/360 (0.29")
CALCULATED VERT. DEFL.(TL) = L/ 999 (0.02")

CSI: TC=0.21/1.00 (B-C:1) , BC=0.10/1.00 (F-G:4) , WB=0.04/1.00 (B-G:1) , SSI=0.09/1.00 (B-C:1)

DOL LUMBER=1.00 NAIL=1.00 LS BEND=1.10 COMP=1.10 SHEAR=1.10 TENS= 1.10

COMPANION LIVE LOAD FACTOR = 0.50

TRUSS PLATE MANUFACTURER IS NOT RESPONSIBLE FOR QUALITY CONTROL IN THE TRUSS MANUFACTURING PLANT .

NAIL VALUES

PLATE	GRIP(DRY) (PSI) MAX	MIN	SHEAR (PLI) MAX	MIN	SECTION (PLI) MAX	MIN
MT20	618	354	1667	788	1987	1656

PLATE PLACEMENT TOL. = 0.250 inches

PLATE ROTATION TOL. = 5.0 Deg.

JSI GRIP= 0.67 (H) (INPUT = 0.90)
JSI METAL= 0.26 (H) (INPUT = 1.00)

JOB NAME	TRUSS NAME	QUANTITY	PLY	JOB DESC.	DRWG NO.
313991	H39TG		1	TRUSS DESC. JT-39002	E-19112528

Alpa Roof Truss, Maple

Version 8.300 S Aug 9 2019 MiTek Industries, Inc. Fri Nov 8 13:11:46 2019 Page 1

ID:VRLqmcIDiflZCj2mk6F92VyQuye-cpha8YWFx1ZHBMr1XctRfUashEzh2DAEgSh5WDyLFGR

Scale = 1:58.7

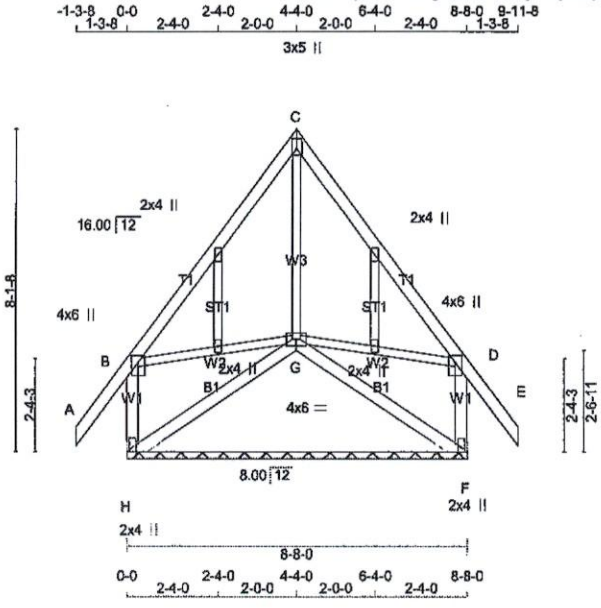

TOTAL WEIGHT = 54 lb

[M]

LUMBER

N. L. G. A. RULES

CHORDS	SIZE		LUMBER	DESCR.
A - C	2x4	DRY	No.2	SPF
C - E	2x4	DRY	No.2	SPF
H - B	2x4	DRY	No.2	SPF
F - D	2x4	DRY	No.2	SPF
H - G	2x4	DRY	No.2	SPF
G - F	2x4	DRY	No.2	SPF
ALL WEBS EXCEPT	2x3	DRY	No.2	SPF
ALL GABLE WEBS	2x3	DRY	No.2	SPF

DRY: SEASONED LUMBER.

GABLE STUDS SPACED AT 2-0-0 OC.

PLATES (table is in inches)

JT	TYPE	PLATES	W	LEN	Y	X
B	TMVW+p	MT20	4.0	6.0	2.00	2.00
C	TTW+p	MT20	3.0	5.0	2.00	Edge
D	TMVW+p	MT20	4.0	6.0	2.00	2.00
F	BMV1+p	MT20	2.0	4.0	Edge	
G	BBWWW1-p	MT20	4.0	6.0		
H	BMV1+p	MT20	2.0	4.0	Edge	
I, J, K, L						
I	NP+w	MT20	2.0	4.0		

Edge - INDICATES REFERENCE CORNER OF PLATE TOUCHES EDGE OF CHORD.

NOTE: Lateral brace(s) shown shall be 2x4 SPF #2

LICENSED PROFESSIONAL ENGINEER
11/08/2019
R. TURINNE
100157040
PROVINCE OF ONTARIO

DIMENSIONS, SUPPORTS AND LOADINGS SPECIFIED BY FABRICATOR TO BE VERIFIED BY BUILDING DESIGNER

BEARINGS

JT	FACTORED GROSS REACTION VERT	HORZ	MAXIMUM FACTORED GROSS REACTION DOWN	HORZ	UPLIFT	INPUT BRG IN-SX	REQRD BRG IN-SX
H	402	0	402	0	0	8-8-0 (7-8-0)	4-14
G	331	0	331	0	0	8-8-0 (7-8-0)	4-14
F	402	0	402	0	0	8-8-0 (7-8-0)	4-14

VALUE IN PARENTHESIS INDICATES EFFECTIVE BEARING LENGTH

UNFACTORED REACTIONS

JT	1ST LCASE COMBINED	MAX./MIN. COMPONENT REACTIONS SNOW	LIVE	PERM.LIVE	WIND	DEAD	SOIL
H	282	199 / 0	0 / 0	0 / 0	0 / 0	83 / 0	0 / 0
G	237	137 / 0	0 / 0	0 / 0	0 / 0	100 / 0	0 / 0
F	282	199 / 0	0 / 0	0 / 0	0 / 0	83 / 0	0 / 0

BEARING MATERIAL TO BE SPF NO.2 OR BETTER AT JOINT(S) H, G, F

BRACING

TOP CHORD TO BE SHEATHED OR MAX. PURLIN SPACING = 6.25 FT.
MAX. UNBRACED BOTTOM CHORD LENGTH = 10.00 FT OR RIGID CEILING DIRECTLY APPLIED.

ALL PITCH BREAKS AND PERIMETER CORNER JOINTS MUST BE LATERALLY RESTRAINED.

LOADING

TOTAL LOAD CASES: (4)

CHORDS

MEMB. FR-TO	MAX. FACTORED FORCE (LBS)	FACTORED VERT. LOAD (PLF) FROM	TO	LC1 MAX CSI (LC)	MAX. UNBRAC LENGTH
A- B	0 / 48	-84.9	-84.9	0.12 (1)	10.00
B- C	-82 / 0	-84.9	-84.9	0.27 (1)	6.25
C- D	-82 / 0	-84.9	-84.9	0.27 (1)	6.25
D- E	0 / 48	-84.9	-84.9	0.12 (1)	10.00
H- B	-362 / 0	0.0	0.0	0.05 (1)	7.81
F- D	-362 / 0	0.0	0.0	0.05 (1)	7.81
H- G	0 / 0	-18.5	-18.5	0.10 (4)	10.00
G- F	0 / 0	-18.5	-18.5	0.10 (4)	10.00

WEBS

MEMB. FR-TO	MAX. FACTORED FORCE (LBS)	MAX CSI (LC)
G- C	-236 / 0	0.10 (1)
B- G	0 / 50	0.01 (1)
G- D	0 / 50	0.01 (1)

DESIGN CRITERIA

SPECIFIED LOADS:

TOP CH.	LL =	23.3	PSF
	DL =	6.0	PSF
BOT CH.	LL =	0.0	PSF
	DL =	7.4	PSF
TOTAL LOAD	=	36.7	PSF

SPACING = 24.0 IN. C/C

THIS TRUSS IS DESIGNED FOR RESIDENTIAL OR SMALL BUILDING REQUIREMENTS OF PART 9, NBCC 2010

THIS DESIGN COMPLIES WITH:
- PART 9 OF OBC 2012 , BCBC 2012 , ABC 2014
- CSA 086-09
- TPIC 2011

(55 % OF 27.2 P.S.F. G.S.L. PLUS 8.4 P.S.F. RAIN LOAD) EQUALS 23.3 P.S.F. SPECIFIED ROOF LIVE LOAD

CSI: TC=0.27/1.00 (B-C:1) , BC=0.10/1.00 (F-G:4) , WB=0.10/1.00 (C-G:1) , SSI=0.09/1.00 (B-C:1)

DOL LUMBER=1.00 NAIL=1.00 LS BEND=1.10 COMP=1.10 SHEAR=1.10 TENS= 1.10

COMPANION LIVE LOAD FACTOR = 0.50

TRUSS PLATE MANUFACTURER IS NOT RESPONSIBLE FOR QUALITY CONTROL IN THE TRUSS MANUFACTURING PLANT .

NAIL VALUES

PLATE	GRIP(DRY) (PSI) MAX	MIN	SHEAR (PLI) MAX	MIN	SECTION (PLI) MAX	MIN
MT20	618	354	1667	788	1987	1656

PLATE PLACEMENT TOL. = 0.250 Inches

PLATE ROTATION TOL. = 5.0 Deg.

JSI GRIP= 0.46 (H) (INPUT = 0.90)
JSI METAL= 0.18 (F) (INPUT = 1.00)

JOB NAME	TRUSS NAME	QUANTITY	PLY	JOB DESC.	DRWG NO.
313991	H40		1	JT-39002	E-19112529
Alpa Roof Truss, Maple				TRUSS DESC.	

Version 8.300 S Aug 9 2019 MiTek Industries, Inc. Fri Nov 8 12:59:16 2019 Page 1
ID:VRLqmclDiflZCj2mk6F92VyQuye-aXN2k5RoZb3hD6Vub5QZGKWX_vrBKqArCm0OChyLFS9

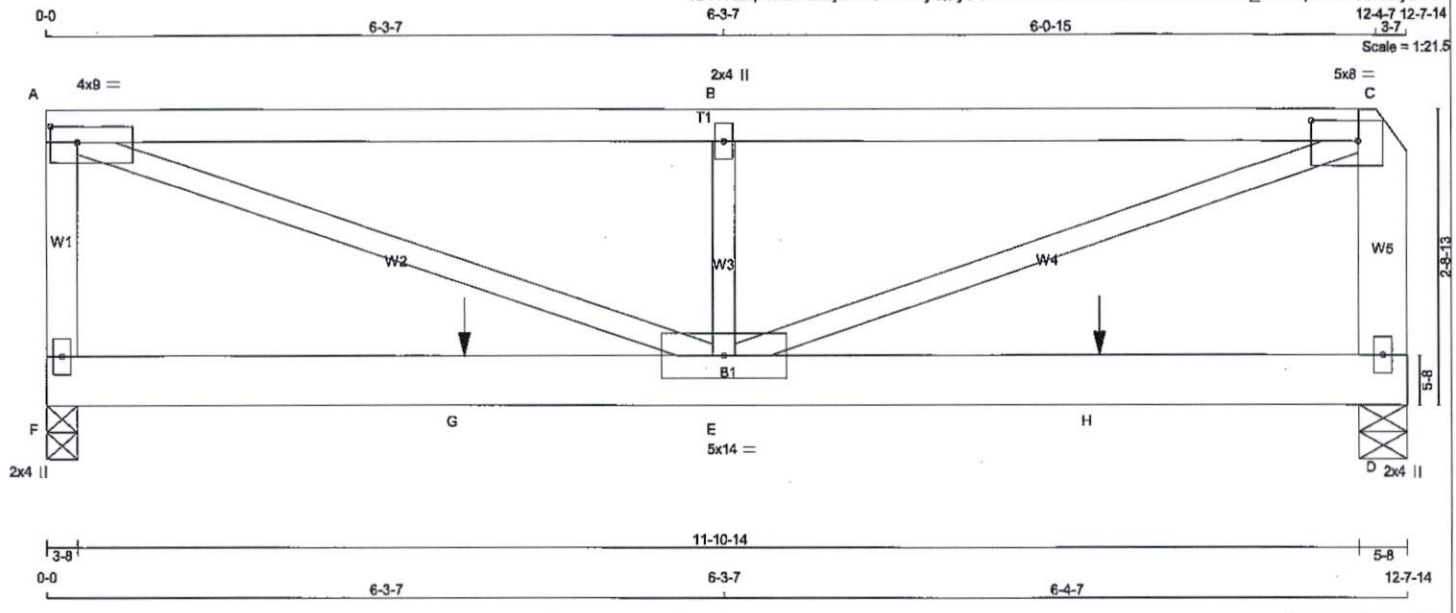

TOTAL WEIGHT = 55 lb

[M]

LUMBER

N. L. G. A. RULES

CHORDS	SIZE		LUMBER	DESCR.
F - A	2x4	DRY	No.2	SPF
A - C	2x4	DRY	2100F 1.8E	SPF
F - D	2x6	DRY	No.2	SPF
ALL WEBS EXCEPT	2x3	DRY	No.2	SPF
D - C	2x6	DRY	No.2	SPF

DRY: SEASONED LUMBER.

PLATES (table is in inches)

JT	TYPE	PLATES	W	LEN	Y	X
A	TMVW-t	MT20	4.0	9.0	1.75	3.00
B	TMW+w	MT20	2.0	4.0		
C	TWMW*-l	MT20	5.0	8.0	2.25	5.25
D	BMW1+w	MT20	2.0	4.0		
E	BMWWW-t	MT20	5.0	14.0		
F	BMV1+p	MT20	2.0	4.0		

NOTE: Lateral brace(s) shown shall be 2x4 SPF #2

LICENSED PROFESSIONAL ENGINEER
11/08/2019
R. TURENNE
100157040
PROVINCE OF ONTARIO

DIMENSIONS, SUPPORTS AND LOADINGS SPECIFIED BY FABRICATOR TO BE VERIFIED BY BUILDING DESIGNER

BEARINGS

JT	FACTORED GROSS REACTION VERT	HORZ	MAXIMUM FACTORED GROSS REACTION DOWN	HORZ	UPLIFT	INPUT BRG IN-SX	REQRD BRG IN-SX
F	1966	0	1966	0	0	3-8	2-14
D	2119	0	2119	0	0	5-8	2-5

UNFACTORED REACTIONS

JT	1ST LCASE COMBINED	MAX./MIN. COMPONENT REACTIONS SNOW	LIVE	PERM.LIVE	WIND	DEAD	SOIL
F	1396	886 / 0	0 / 0	0 / 0	0 / 0	510 / 0	0 / 0
D	1504	955 / 0	0 / 0	0 / 0	0 / 0	549 / 0	0 / 0

BEARING MATERIAL TO BE SPF NO.2 OR BETTER AT JOINT(S) F, D

BRACING

TOP CHORD TO BE SHEATHED OR MAX. PURLIN SPACING = 3.33 FT.
MAX. UNBRACED BOTTOM CHORD LENGTH = 10.00 FT OR RIGID CEILING DIRECTLY APPLIED.

ALL PITCH BREAKS AND PERIMETER CORNER JOINTS MUST BE LATERALLY RESTRAINED.

LOADING

TOTAL LOAD CASES: (4)

CHORDS

MEMB. FR-TO	MAX. FACTORED FORCE (LBS)	FACTORED VERT. LOAD (PLF) FROM	TO	LC1 CSI (LC)	MAX UNBRAC LENGTH
F- A	-1674 / 0	0.0	0.0	0.23 (1)	6.37
A- B	-3361 / 0	-167.1	-167.1	0.91 (1)	3.33
B- C	-3361 / 0	-167.1	-167.1	0.90 (1)	3.33
F- G	0 / 0	-36.4	-36.4	0.63 (1)	10.00
G- E	0 / 0	-36.4	-36.4	0.63 (1)	10.00
E- H	0 / 0	-36.4	-36.4	0.74 (1)	10.00
H- D	0 / 0	-36.4	-36.4	0.74 (1)	10.00

WEBS

MEMB. FR-TO	MAX. FACTORED FORCE (LBS)	MAX CSI (LC)
A- E	0 / 3589	0.89 (1)
E- B	-1265 / 0	0.22 (1)
E- C	0 / 3600	0.89 (1)
D- C	-1689 / 0	0.14 (1)

FACTORED CONCENTRATED LOADS (LBS)

JT	LOC.	LC1	MAX-	MAX+	FACE	DIR.	TYPE	HEEL	CONN.
G	3-10-7	-778	-778	---	FRONT	VERT	TOTAL	—	C1
H	9-9-5	-778	-778	---	FRONT	VERT	TOTAL	—	C1

CONNECTION REQUIREMENTS

1) **C1:** A SUITABLE HANGER/MECHANICAL CONNECTION IS REQUIRED.

DESIGN CRITERIA

*** SPECIAL LOADS ANALYSIS ***
GEOMETRY AND/OR BASIC LOADS CHANGED BY USER.
LOADS WERE DERIVED FROM USER INPUT
NO FURTHER MODIFICATIONS WERE MADE

SPECIFIED LOADS:

TOP CH.	LL =	23.3	PSF
	DL =	6.0	PSF
BOT CH.	LL =	0.0	PSF
	DL =	7.4	PSF
TOTAL LOAD	=	36.7	PSF

SPACING = 24.0 IN. C/C

LOADING IN FLAT SECTION BASED ON A SLOPE OF 2.00/12 MINIMUM

GIRDER TYPE: CPrimeHip
SIDE SETBACK = 0-0
END SETBACK = 5-10-8
END WALL WIDTH = 0-0
CORNER FRAMING TYPE: CONVENTIONAL
END JACK TYPE: CONVENTIONAL
APPLIED TO FRONT SIDE
- ADDT'L LOADS BASED ON 55 % OF GSL.

*** NON STANDARD GIRDER ***
ADDT'L USER-DEFINED LOADS APPLIED TO ALL LOAD CASES.

THIS TRUSS IS DESIGNED FOR RESIDENTIAL OR SMALL BUILDING REQUIREMENTS OF PART 9, NBCC 2010

THIS DESIGN COMPLIES WITH:
- PART 9 OF OBC 2012 , BCBC 2012 , ABC 2014
- CSA 086-09
- TPIC 2011

(55 % OF 27.2 P.S.F. G.S.L. PLUS 8.4 P.S.F. RAIN LOAD) EQUALS 23.3 P.S.F. SPECIFIED ROOF LIVE LOAD

ALLOWABLE DEFL.(LL)= L/360 (0.41")
CALCULATED VERT. DEFL.(LL) = L/ 999 (0.12")
ALLOWABLE DEFL.(TL)= L/360 (0.41")
CALCULATED VERT. DEFL.(TL) = L/ 609 (0.24")

CSI: TC=0.91/1.00 (A-B:1) , BC=0.74/1.00 (D-E:1) , WB=0.89/1.00 (C-E:1) , SSI=0.55/1.00 (A-B:1)

DOL LUMBER=1.00 NAIL=1.00 LS BEND=1.00 COMP=1.00 SHEAR=1.00 TENS= 1.00

COMPANION LIVE LOAD FACTOR = 0.50

TRUSS PLATE MANUFACTURER IS NOT RESPONSIBLE FOR QUALITY CONTROL IN THE TRUSS MANUFACTURING PLANT .

NAIL VALUES

PLATE	GRIP(DRY) (PSI) MAX	MIN	SHEAR (PLI) MAX	MIN	SECTION (PLI) MAX	MIN
MT20	618	354	1667	788	1987	1656

CONTINUED ON PAGE 2

JOB NAME	TRUSS NAME	QUANTITY	PLY	JOB DESC.	DRWG NO.
313991	H41T		1	TRUSS DESC. JT-39002	E-19112530

Alpa Roof Truss, Maple

Version 8.300 S Aug 9 2019 MiTek Industries, Inc. Fri Nov 8 13:12:05 2019 Page 1
ID:VRLqmclDiflZCj2mk6F92VyQuye-ZTLI72k9StyazHoh85juwVs9pvT1?q811vobhcyLFG8

Scale = 1:46.6

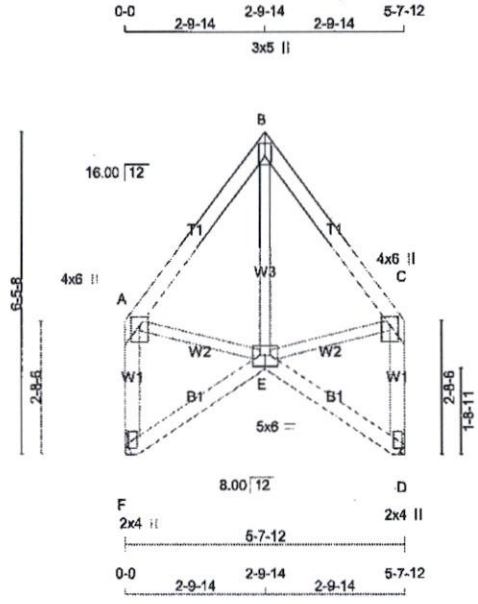

TOTAL WEIGHT = 2 X 32 = 65 lb

[M][F]

LUMBER

N. L. G. A. RULES

CHORDS	SIZE		LUMBER	DESCR.
A - B	2x4	DRY	No.2	SPF
B - C	2x4	DRY	No.2	SPF
F - A	2x4	DRY	No.2	SPF
D - C	2x4	DRY	No.2	SPF
F - E	2x4	DRY	No.2	SPF
E - D	2x4	DRY	No.2	SPF
ALL WEBS EXCEPT	2x3	DRY	No.2	SPF

DRY: SEASONED LUMBER.

PLATES (table is in inches)

JT	TYPE	PLATES	W	LEN	Y	X
A	TMVW+p	MT20	4.0	6.0	2.00	2.00
B	TTW+p	MT20	3.0	5.0	2.00	Edge
C	TMVW+p	MT20	4.0	6.0	2.00	2.00
D	BMV1+p	MT20	2.0	4.0		
E	BBWWW-p	MT20	5.0	6.0	2.75	3.00
F	BMV1+p	MT20	2.0	4.0		

Edge - INDICATES REFERENCE CORNER OF PLATE TOUCHES EDGE OF CHORD.

NOTE: Lateral brace(s) shown shall be 2x4 SPF #2

LICENSED PROFESSIONAL ENGINEER
11/08/2019
R. TURENNE
100157040
PROVINCE OF ONTARIO

DIMENSIONS, SUPPORTS AND LOADINGS SPECIFIED BY FABRICATOR TO BE VERIFIED BY BUILDING DESIGNER

BEARINGS

JT	FACTORED GROSS REACTION VERT	HORZ	MAXIMUM FACTORED GROSS REACTION DOWN	HORZ	UPLIFT	INPUT BRG IN-SX	REQRD BRG IN-SX
F	292	0	292	0	0	MECHANICAL	
D	292	0	292	0	0	MECHANICAL	

A SUITABLE HANGER/MECHANICAL CONNECTION IS REQUIRED AT JOINT F, D. MINIMUM BEARING LENGTH AT JOINT F = 1-8, JOINT D = 1-8.

UNFACTORED REACTIONS

JT	1ST LCASE COMBINED	MAX./MIN. COMPONENT REACTIONS SNOW	LIVE	PERM.LIVE	WIND	DEAD	SOIL
F	207	131 / 0	0 / 0	0 / 0	0 / 0	76 / 0	0 / 0
D	207	131 / 0	0 / 0	0 / 0	0 / 0	76 / 0	0 / 0

BRACING

TOP CHORD TO BE SHEATHED OR MAX. PURLIN SPACING = 6.25 FT.
MAX. UNBRACED BOTTOM CHORD LENGTH = 10.00 FT OR RIGID CEILING DIRECTLY APPLIED.

ALL PITCH BREAKS AND PERIMETER CORNER JOINTS MUST BE LATERALLY RESTRAINED.

LOADING

TOTAL LOAD CASES: (4)

CHORDS

MEMB. FR-TO	MAX. FACTORED FORCE (LBS)	FACTORED VERT. LOAD (PLF) FROM	TO	LC1 MAX CSI (LC)	MAX. UNBRAC LENGTH
A- B	-159 / 0	-84.9	-84.9	0.09 (1)	6.25
B- C	-159 / 0	-84.9	-84.9	0.09 (1)	6.25
F- A	-266 / 0	0.0	0.0	0.04 (1)	7.81
D- C	-266 / 0	0.0	0.0	0.04 (1)	7.81
F- E	0 / 0	-18.5	-18.5	0.04 (4)	10.00
E- D	0 / 0	-18.5	-18.5	0.04 (4)	10.00

WEBS

MEMB. FR-TO	MAX. FACTORED FORCE (LBS)	MAX CSI (LC)
E- B	0 / 45	0.02 (4)
A- E	0 / 97	0.02 (1)
E- C	0 / 97	0.02 (1)

DESIGN CRITERIA

SPECIFIED LOADS:

TOP CH.	LL =	23.3	PSF
	DL =	6.0	PSF
BOT CH.	LL =	0.0	PSF
	DL =	7.4	PSF
TOTAL LOAD	=	36.7	PSF

SPACING = 24.0 IN. C/C

THIS TRUSS IS DESIGNED FOR RESIDENTIAL OR SMALL BUILDING REQUIREMENTS OF PART 9, NBCC 2010

THIS DESIGN COMPLIES WITH:
- PART 9 OF OBC 2012 , BCBC 2012 , ABC 2014
- CSA 086-09
- TPIC 2011

(55 % OF 27.2 P.S.F. G.S.L. PLUS 8.4 P.S.F. RAIN LOAD) EQUALS 23.3 P.S.F. SPECIFIED ROOF LIVE LOAD

ALLOWABLE DEFL.(LL)= L/360 (0.19")
CALCULATED VERT. DEFL.(LL) = L/ 999 (0.00")
ALLOWABLE DEFL.(TL)= L/360 (0.19")
CALCULATED VERT. DEFL.(TL) = L/ 999 (0.00")

CSI: TC=0.09/1.00 (A-B:1) , BC=0.04/1.00 (D-E:4) , WB=0.02/1.00 (A-E:1) , SSI=0.06/1.00 (A-B:1)

DOL LUMBER=1.00 NAIL=1.00 LS BEND=1.10 COMP=1.10 SHEAR=1.10 TENS= 1.10

COMPANION LIVE LOAD FACTOR = 0.50

TRUSS PLATE MANUFACTURER IS NOT RESPONSIBLE FOR QUALITY CONTROL IN THE TRUSS MANUFACTURING PLANT .

NAIL VALUES

PLATE	GRIP(DRY) (PSI) MAX	MIN	SHEAR (PLI) MAX	MIN	SECTION (PLI) MAX	MIN
MT20	618	354	1667	788	1987	1656

PLATE PLACEMENT TOL. = 0.250 inches

PLATE ROTATION TOL. = 5.0 Deg.

JSI GRIP= 0.17 (D) (INPUT = 0.90)
JSI METAL= 0.14 (D) (INPUT = 1.00)

JOB NAME	TRUSS NAME	QUANTITY	PLY	JOB DESC.	DRWG NO.
313991	H41TG		1	TRUSS DESC. JT-39002	E-19112531

Alpa Roof Truss, Maple

Version 8.300 S Aug 9 2019 MiTek Industries, Inc. Fri Nov 8 13:12:06 2019 Page 1

ID:VRLqmcIDiflZCj2mk6F92VyQuye-1fv8LOfoDB4RbRNtipE7TiPK6IpGkH0AGZX8E2yLFG7

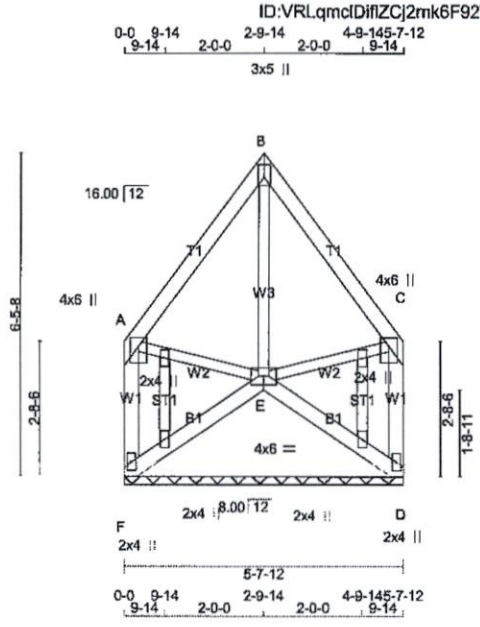

TOTAL WEIGHT = 35 lb

[M]

LUMBER

N. L. G. A. RULES

CHORDS	SIZE		LUMBER	DESCR.
A - B	2x4	DRY	No.2	SPF
B - C	2x4	DRY	No.2	SPF
F - A	2x4	DRY	No.2	SPF
D - C	2x4	DRY	No.2	SPF
F - E	2x4	DRY	No.2	SPF
E - D	2x4	DRY	No.2	SPF
ALL WEBS EXCEPT	2x3	DRY	No.2	SPF
ALL GABLE WEBS	2x3	DRY	No.2	SPF

DRY: SEASONED LUMBER.

GABLE STUDS SPACED AT 2-0-0 OC.

PLATES (table is in inches)

JT	TYPE	PLATES	W	LEN	Y	X
A	TMVW+p	MT20	4.0	6.0	2.00	2.00
B	TTW+p	MT20	3.0	5.0	2.00	Edge
C	TMVW+p	MT20	4.0	6.0	2.00	2.00
D	BMV1+p	MT20	2.0	4.0		
E	BBWWW1-p	MT20	4.0	6.0		
F	BMV1+p	MT20	2.0	4.0		
G, H, I, J						
G	NP+w	MT20	2.0	4.0		

Edge - INDICATES REFERENCE CORNER OF PLATE TOUCHES EDGE OF CHORD.

NOTE: Lateral brace(s) shown shall be 2x4 SPF #2

LICENSED PROFESSIONAL ENGINEER
11/08/2019
R. TURENNE
100157040
PROVINCE OF ONTARIO

DIMENSIONS, SUPPORTS AND LOADINGS SPECIFIED BY FABRICATOR TO BE VERIFIED BY BUILDING DESIGNER

BEARINGS

JT	FACTORED GROSS REACTION VERT	HORZ	MAXIMUM FACTORED GROSS REACTION DOWN	HORZ	UPLIFT	INPUT BRG IN-SX	REQRD BRG IN-SX
F	197	0	197	0	0	5-7-12 (5-2-0)	3-4
E	190	0	190	0	0	5-7-12 (5-2-0)	3-4
D	197	0	197	0	0	5-7-12 (5-2-0)	3-4

VALUE IN PARENTHESIS INDICATES EFFECTIVE BEARING LENGTH

UNFACTORED REACTIONS

JT	1ST LCASE COMBINED	MAX./MIN. COMPONENT REACTIONS SNOW	LIVE	PERM.LIVE	WIND	DEAD	SOIL
F	139	94 / 0	0 / 0	0 / 0	0 / 0	45 / 0	0 / 0
E	137	75 / 0	0 / 0	0 / 0	0 / 0	61 / 0	0 / 0
D	139	94 / 0	0 / 0	0 / 0	0 / 0	45 / 0	0 / 0

BEARING MATERIAL TO BE SPF NO.2 OR BETTER AT JOINT(S) F, E, D

BRACING

TOP CHORD TO BE SHEATHED OR MAX. PURLIN SPACING = 6.25 FT.
MAX. UNBRACED BOTTOM CHORD LENGTH = 10.00 FT OR RIGID CEILING DIRECTLY APPLIED.

ALL PITCH BREAKS AND PERIMETER CORNER JOINTS MUST BE LATERALLY RESTRAINED.

LOADING

TOTAL LOAD CASES: (4)

CHORDS

MEMB. FR-TO	MAX. FACTORED FORCE (LBS)	FACTORED VERT. LOAD (PLF) FROM	TO	LC1 MAX CSI (LC)	MAX. UNBRAC LENGTH
A- B	-56 / 0	-84.9	-84.9	0.12 (1)	6.25
B- C	-56 / 0	-84.9	-84.9	0.12 (1)	6.25
F- A	-171 / 0	0.0	0.0	0.03 (1)	7.81
D- C	-171 / 0	0.0	0.0	0.03 (1)	7.81
F- E	0 / 0	-18.5	-18.5	0.04 (4)	10.00
E- D	0 / 0	-18.5	-18.5	0.04 (4)	10.00

WEBS

MEMB. FR-TO	MAX. FACTORED FORCE (LBS)	MAX CSI (LC)
E- B	-151 / 0	0.05 (1)
A- E	0 / 34	0.01 (1)
E- C	0 / 34	0.01 (1)

DESIGN CRITERIA

SPECIFIED LOADS:

TOP CH.	LL	=	23.3	PSF
	DL	=	6.0	PSF
BOT CH.	LL	=	0.0	PSF
	DL	=	7.4	PSF
TOTAL LOAD		=	36.7	PSF

SPACING = 24.0 IN. C/C

THIS TRUSS IS DESIGNED FOR RESIDENTIAL OR SMALL BUILDING REQUIREMENTS OF PART 9, NBCC 2010

THIS DESIGN COMPLIES WITH:
- PART 9 OF OBC 2012 , BCBC 2012 , ABC 2014
- CSA 086-09
- TPIC 2011

(55 % OF 27.2 P.S.F. G.S.L. PLUS 8.4 P.S.F. RAIN LOAD) EQUALS 23.3 P.S.F. SPECIFIED ROOF LIVE LOAD

CSI: TC=0.12/1.00 (A-B:1) , BC=0.04/1.00 (D-E:4) , WB=0.05/1.00 (B-E:1) , SSI=0.06/1.00 (A-B:1)

DOL LUMBER=1.00 NAIL=1.00 LS BEND=1.10 COMP=1.10 SHEAR=1.10 TENS= 1.10

COMPANION LIVE LOAD FACTOR = 0.50

TRUSS PLATE MANUFACTURER IS NOT RESPONSIBLE FOR QUALITY CONTROL IN THE TRUSS MANUFACTURING PLANT .

NAIL VALUES

PLATE	GRIP(DRY) (PSI) MAX	MIN	SHEAR (PLI) MAX	MIN	SECTION (PLI) MAX	MIN
MT20	618	354	1667	788	1987	1656

PLATE PLACEMENT TOL. = 0.250 inches

PLATE ROTATION TOL. = 5.0 Deg.

JSI GRIP= 0.16 (E) (INPUT = 0.90)
JSI METAL= 0.09 (D) (INPUT = 1.00)

JOB NAME	TRUSS NAME	QUANTITY	PLY	JOB DESC.	DRWG NO.
313991	J01		1	TRUSS DESC. JT-39002	E-19112532

Alpa Roof Truss, Maple

Version 8.300 S Aug 9 2019 MiTek Industries, Inc. Fri Nov 8 13:12:34 2019 Page 1

ID:VRLqmcIDiflZCj2mk6F92VyQuye-C2bjDz5MdncTykWGLhkhccZ02bJmlyeliwJcCRyLFFh

Scale = 1:33.6

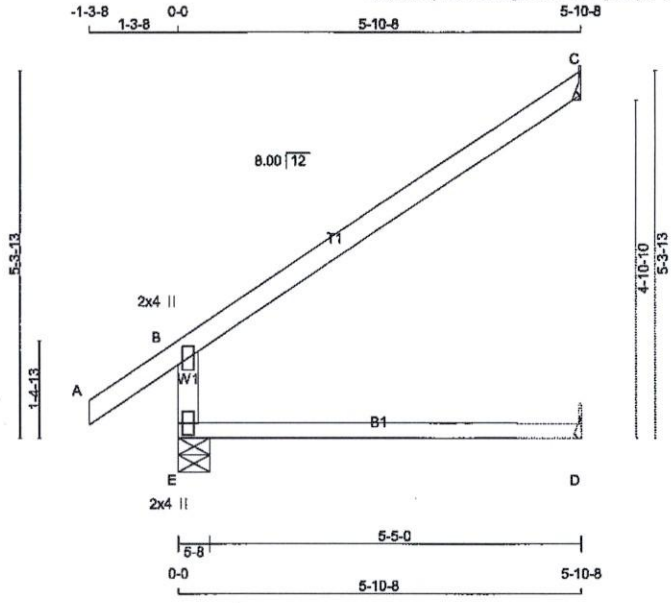

TOTAL WEIGHT = 15 X 16 = 240 lb

[M]

LUMBER

N. L. G. A. RULES

CHORDS	SIZE		LUMBER	DESCR.
E - B	2x4	DRY	No.2	SPF
A - C	2x4	DRY	No.2	SPF
E - D	2x3	DRY	No.2	SPF

DRY: SEASONED LUMBER.

PLATES (table is in inches)

JT	TYPE	PLATES	W	LEN	Y	X
B	TMV+p	MT20	2.0	4.0		
E	BMV1+p	MT20	2.0	4.0		

NOTE: Lateral brace(s) shown shall be 2x4 SPF #2

LICENSED PROFESSIONAL ENGINEER
11/08/2019
R. TURENNE
100157040
PROVINCE OF ONTARIO

DIMENSIONS, SUPPORTS AND LOADINGS SPECIFIED BY FABRICATOR TO BE VERIFIED BY BUILDING DESIGNER

BEARINGS

JT	FACTORED GROSS REACTION VERT	HORZ	MAXIMUM FACTORED GROSS REACTION DOWN	HORZ	UPLIFT	INPUT BRG IN-SX	REQRD BRG IN-SX
E	494	0	494	0	0	5-8	1-8
C	187	0	187	0	0	MECHANICAL	
D	43	0	48	0	0	MECHANICAL	

A SUITABLE HANGER/MECHANICAL CONNECTION IS REQUIRED AT JOINT C, D. MINIMUM BEARING LENGTH AT JOINT C = 1-8, JOINT D = 1-8.

BEVELED PLATE OR SHIM REQUIRED TO PROVIDE FULL BEARING SURFACE WITH TRUSS CHORD AT JT(S): C

UNFACTORED REACTIONS

JT	1ST LCASE COMBINED	MAX./MIN. COMPONENT REACTIONS SNOW	LIVE	PERM.LIVE	WIND	DEAD	SOIL
E	348	235 / 0	0 / 0	0 / 0	0 / 0	113 / 0	0 / 0
C	129	103 / 0	0 / 0	0 / 0	0 / 0	26 / 0	0 / 0
D	34	0 / 0	0 / 0	0 / 0	0 / 0	34 / 0	0 / 0

BEARING MATERIAL TO BE SPF NO.2 OR BETTER AT JOINT(S) E

BRACING

TOP CHORD TO BE SHEATHED OR MAX. PURLIN SPACING = 6.25 FT.
MAX. UNBRACED BOTTOM CHORD LENGTH = 10.00 FT OR RIGID CEILING DIRECTLY APPLIED.

ALL PITCH BREAKS AND PERIMETER CORNER JOINTS MUST BE LATERALLY RESTRAINED.

LOADING

TOTAL LOAD CASES: (4)

CHORDS

MEMB. FR-TO	MAX. FACTORED FORCE (LBS)	FACTORED VERT. LOAD (PLF) FROM	TO	LC1 CSI (LC)	MAX UNBRAC LENGTH
E- B	-428 / 0	0.0	0.0	0.16 (4)	7.81
A- B	0 / 32	-84.9	-84.9	0.11 (1)	10.00
B- C	-35 / 0	-84.9	-84.9	0.50 (1)	6.25
E- D	0 / 0	-18.5	-18.5	0.30 (4)	10.00

WEBS

MEMB. FR-TO	MAX. FACTORED FORCE (LBS)	MAX CSI (LC)

DESIGN CRITERIA

SPECIFIED LOADS:

TOP CH.	LL =	23.3	PSF
	DL =	6.0	PSF
BOT CH.	LL =	0.0	PSF
	DL =	7.4	PSF
TOTAL LOAD	=	36.7	PSF

SPACING = 24.0 IN. C/C

THIS TRUSS IS DESIGNED FOR RESIDENTIAL OR SMALL BUILDING REQUIREMENTS OF PART 9, NBCC 2010

THIS DESIGN COMPLIES WITH:
- PART 9 OF OBC 2012 , BCBC 2012 , ABC 2014
- CSA 086-09
- TPIC 2011

DESIGN ASSUMPTIONS
-OVERHANG NOT TO BE ALTERED OR CUT OFF.

(55 % OF 27.2 P.S.F. G.S.L. PLUS 8.4 P.S.F. RAIN LOAD) EQUALS 23.3 P.S.F. SPECIFIED ROOF LIVE LOAD

ALLOWABLE DEFL.(LL)= L/360 (0.20")
CALCULATED VERT. DEFL.(LL) = L/ 999 (0.00")
ALLOWABLE DEFL.(TL)= L/360 (0.20")
CALCULATED VERT. DEFL.(TL) = L/ 932 (0.08")

CSI: TC=0.50/1.00 (B-C:1) , BC=0.30/1.00 (D-E:4) , WB=0.00/1.00 (n/a:0) , SSI=0.20/1.00 (B-C:1)

DOL LUMBER=1.00 NAIL=1.00 LS BEND=1.10 COMP=1.10 SHEAR=1.10 TENS= 1.10

COMPANION LIVE LOAD FACTOR = 0.50

AUTOSOLVE RIGHT HEEL ONLY

TRUSS PLATE MANUFACTURER IS NOT RESPONSIBLE FOR QUALITY CONTROL IN THE TRUSS MANUFACTURING PLANT .

NAIL VALUES

PLATE	GRIP(DRY) (PSI) MAX	MIN	SHEAR (PLI) MAX	MIN	SECTION (PLI) MAX	MIN
MT20	618	354	1667	788	1987	1656

PLATE PLACEMENT TOL. = 0.250 inches

PLATE ROTATION TOL. = 5.0 Deg.

JSI GRIP= 0.28 (B) (INPUT = 0.90)
JSI METAL= 0.22 (B) (INPUT = 1.00)

JOB NAME	TRUSS NAME	QUANTITY	PLY	JOB DESC.	DRWG NO.
313991	J02T		1	TRUSS DESC. JT-39002	E-19112533

Alpa Roof Truss, Maple

Version 8.300 S Aug 9 2019 MiTek Industries, Inc. Fri Nov 8 13:12:09 2019 Page 1
ID:VRLqmcIDiflZCj2mk6F92VyQuye-REaGzQngW6S0Su5SNxnq5L1INWpjxeSdyXmoqNyLFG4

Scale = 1:42.3

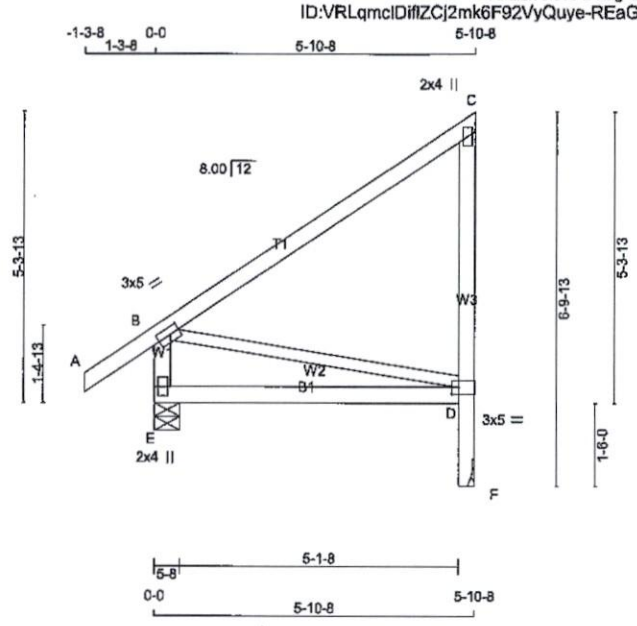

TOTAL WEIGHT = 2 X 29 = 59 lb [M]

LUMBER
N. L. G. A. RULES

CHORDS	SIZE		LUMBER	DESCR.
E - B	2x4	DRY	No.2	SPF
A - C	2x4	DRY	No.2	SPF
F - C	2x4	DRY	No.2	SPF
E - D	2x4	DRY	No.2	SPF
ALL WEBS	2x3	DRY	No.2	SPF

DRY: SEASONED LUMBER.

PLATES (table is in inches)

JT	TYPE	PLATES	W	LEN	Y	X
B	TMVW-t	MT20	3.0	5.0	1.50	2.00
C	TMV+p	MT20	2.0	4.0		
D	BVMW-l	MT20	3.0	5.0	1.50	1.50
E	BMV1+p	MT20	2.0	4.0		

NOTE: Lateral brace(s) shown shall be 2x4 SPF #2

LICENSED PROFESSIONAL ENGINEER
11/08/2019
R. TURENNE
100157040
PROVINCE OF ONTARIO

DIMENSIONS, SUPPORTS AND LOADINGS SPECIFIED BY FABRICATOR TO BE VERIFIED BY BUILDING DESIGNER

BEARINGS

JT	FACTORED GROSS REACTION VERT	HORZ	MAXIMUM FACTORED GROSS REACTION DOWN	HORZ	UPLIFT	INPUT BRG IN-SX	REQRD BRG IN-SX
E	420	0	420	0	0	5-8	1-8
F	304	0	304	0	0	MECHANICAL	

A SUITABLE HANGER/MECHANICAL CONNECTION IS REQUIRED AT JOINT F. MINIMUM BEARING LENGTH AT JOINT F = 1-8.

UNFACTORED REACTIONS

JT	1ST LCASE COMBINED	MAX./MIN. COMPONENT REACTIONS SNOW	LIVE	PERM.LIVE	WIND	DEAD	SOIL
E	296	201 / 0	0 / 0	0 / 0	0 / 0	95 / 0	0 / 0
F	216	137 / 0	0 / 0	0 / 0	0 / 0	79 / 0	0 / 0

BEARING MATERIAL TO BE SPF NO.2 OR BETTER AT JOINT(S) E

BRACING
TOP CHORD TO BE SHEATHED OR MAX. PURLIN SPACING = 10.00 FT.
MAX. UNBRACED BOTTOM CHORD LENGTH = 10.00 FT OR RIGID CEILING DIRECTLY APPLIED.

ALL PITCH BREAKS AND PERIMETER CORNER JOINTS MUST BE LATERALLY RESTRAINED.

LOADING
TOTAL LOAD CASES: (4)

CHORDS

MEMB. FR-TO	MAX. FACTORED FORCE (LBS)	FACTORED VERT. LOAD (PLF) FROM	TO	LC1	MAX CSI (LC)	MAX. UNBRAC LENGTH
E- B	-366 / 0	0.0	0.0	0.04 (1)	7.81	
A- B	0 / 32	-84.9	-84.9	0.11 (1)	10.00	
B- C	0 / 0	-84.9	-84.9	0.50 (1)	10.00	
F- D	-304 / 0	0.0	0.0	0.04 (1)	7.81	
D- C	-249 / 0	0.0	0.0	0.14 (1)	7.81	
E- D	0 / 0	-18.5	-18.5	0.19 (4)	10.00	

WEBS

MEMB. FR-TO	MAX. FACTORED FORCE (LBS)	MAX CSI (LC)
B- D	0 / 0	0.00 (1)

DESIGN CRITERIA

SPECIFIED LOADS:

TOP CH.	LL =	23.3	PSF
	DL =	6.0	PSF
BOT CH.	LL =	0.0	PSF
	DL =	7.4	PSF
TOTAL LOAD	=	36.7	PSF

SPACING = 24.0 IN. C/C

THIS TRUSS IS DESIGNED FOR RESIDENTIAL OR SMALL BUILDING REQUIREMENTS OF PART 9, NBCC 2010

THIS DESIGN COMPLIES WITH:
- PART 9 OF OBC 2012 , BCBC 2012 , ABC 2014
- CSA 086-09
- TPIC 2011

(55 % OF 27.2 P.S.F. G.S.L. PLUS 8.4 P.S.F. RAIN LOAD) EQUALS 23.3 P.S.F. SPECIFIED ROOF LIVE LOAD

ALLOWABLE DEFL.(LL)= L/360 (0.20")
CALCULATED VERT. DEFL.(LL) = L/ 999 (0.00")
ALLOWABLE DEFL.(TL)= L/360 (0.20")
CALCULATED VERT. DEFL.(TL) = L/ 999 (0.05")

CSI: TC=0.50/1.00 (B-C:1) , BC=0.19/1.00 (D-E:4) , WB=0.00/1.00 (B-D:1) , SSI=0.16/1.00 (B-C:1)

DOL LUMBER=1.00 NAIL=1.00 LS BEND=1.10 COMP=1.10 SHEAR=1.10 TENS= 1.10

COMPANION LIVE LOAD FACTOR = 0.50

TRUSS PLATE MANUFACTURER IS NOT RESPONSIBLE FOR QUALITY CONTROL IN THE TRUSS MANUFACTURING PLANT .

NAIL VALUES

PLATE	GRIP(DRY) (PSI) MAX	MIN	SHEAR (PLI) MAX	MIN	SECTION (PLI) MAX	MIN
MT20	618	354	1667	788	1987	1656

PLATE PLACEMENT TOL. = 0.250 inches

PLATE ROTATION TOL. = 5.0 Deg.

JSI GRIP= 0.36 (D) (INPUT = 0.90)
JSI METAL= 0.13 (C) (INPUT = 1.00)

JOB NAME	TRUSS NAME	QUANTITY	PLY	JOB DESC.		DRWG NO.
313991	J02TA		1	TRUSS DESC.	JT-39002	E-19112534

Alpa Roof Truss, Maple

Version 8.300 S Aug 9 2019 MiTek Industries, Inc. Fri Nov 8 13:12:10 2019 Page 1
ID:VRLqmcIDiflZCj2mk6F92VyQuye-vR8eAloIHPat32gfxel3dYZxsw8yg4TmBBVMNqyLFG3

Scale = 1:41.0

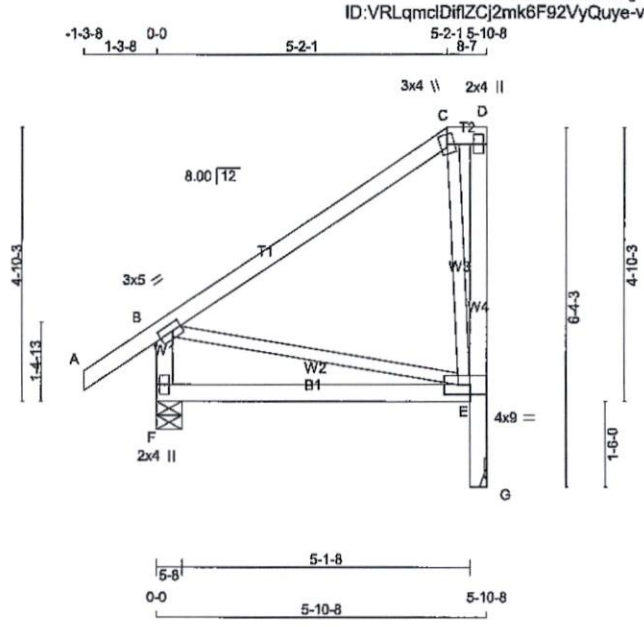

TOTAL WEIGHT = 32 lb
[M]

LUMBER
N. L. G. A. RULES

CHORDS	SIZE		LUMBER	DESCR.
A - C	2x4	DRY	No.2	SPF
C - D	2x4	DRY	No.2	SPF
G - D	2x4	DRY	No.2	SPF
F - B	2x4	DRY	No.2	SPF
F - E	2x4	DRY	No.2	SPF
ALL WEBS EXCEPT	2x3	DRY	No.2	SPF

DRY: SEASONED LUMBER.

PLATES (table is in inches)

JT	TYPE	PLATES	W	LEN	Y	X
B	TMVW-t	MT20	3.0	5.0	1.50	2.00
C	TTW+m	MT20	3.0	4.0		
D	TMV+p	MT20	2.0	4.0		
E	BVMWW-l	MT20	4.0	9.0	2.00	3.00
F	BMV1+p	MT20	2.0	4.0		

NOTE: Lateral brace(s) shown shall be 2x4 SPF #2

DIMENSIONS, SUPPORTS AND LOADINGS SPECIFIED BY FABRICATOR TO BE VERIFIED BY BUILDING DESIGNER

BEARINGS

JT	FACTORED GROSS REACTION VERT	HORZ	MAXIMUM FACTORED GROSS REACTION DOWN	HORZ	UPLIFT	INPUT BRG IN-SX	REQRD BRG IN-SX
G	304	0	304	0	0	MECHANICAL	
F	420	0	420	0	0	5-8	1-8

A SUITABLE HANGER/MECHANICAL CONNECTION IS REQUIRED AT JOINT G. MINIMUM BEARING LENGTH AT JOINT G = 1-8.

UNFACTORED REACTIONS

JT	1ST LCASE COMBINED	MAX./MIN. COMPONENT REACTIONS SNOW	LIVE	PERM.LIVE	WIND	DEAD	SOIL
G	216	137 / 0	0 / 0	0 / 0	0 / 0	79 / 0	0 / 0
F	296	201 / 0	0 / 0	0 / 0	0 / 0	95 / 0	0 / 0

BEARING MATERIAL TO BE SPF NO.2 OR BETTER AT JOINT(S) F

BRACING
TOP CHORD TO BE SHEATHED OR MAX. PURLIN SPACING = 6.25 FT.
MAX. UNBRACED BOTTOM CHORD LENGTH = 10.00 FT OR RIGID CEILING DIRECTLY APPLIED.

ALL PITCH BREAKS AND PERIMETER CORNER JOINTS MUST BE LATERALLY RESTRAINED.

LOADING
TOTAL LOAD CASES: (4)

CHORDS

MEMB. FR-TO	MAX. FACTORED FORCE (LBS)	FACTORED VERT. LOAD (PLF) FROM	TO	LC1 MAX CSI (LC)	MAX. UNBRAC LENGTH
A- B	0 / 32	-84.9	-84.9	0.11 (1)	10.00
B- C	-42 / 0	-84.9	-84.9	0.39 (1)	6.25
C- D	0 / 0	-84.9	-84.9	0.01 (1)	10.00
G- E	-304 / 0	0.0	0.0	0.04 (1)	7.81
E- D	-30 / 0	0.0	0.0	0.01 (1)	7.81
F- B	-366 / 0	0.0	0.0	0.04 (1)	7.81
F- E	0 / 0	-18.5	-18.5	0.19 (4)	10.00

WEBS

MEMB. FR-TO	MAX. FACTORED FORCE (LBS)	MAX CSI (LC)
C- E	-229 / 0	0.08 (1)
B- E	0 / 36	0.01 (1)

DESIGN CRITERIA

SPECIFIED LOADS:

TOP CH.	LL =	23.3	PSF
	DL =	6.0	PSF
BOT CH.	LL =	0.0	PSF
	DL =	7.4	PSF
TOTAL LOAD	=	36.7	PSF

SPACING = 24.0 IN. C/C

LOADING IN FLAT SECTION BASED ON A SLOPE OF 2.00/12 MINIMUM

THIS TRUSS IS DESIGNED FOR RESIDENTIAL OR SMALL BUILDING REQUIREMENTS OF PART 9, NBCC 2010

THIS DESIGN COMPLIES WITH:
- PART 9 OF OBC 2012 , BCBC 2012 , ABC 2014
- CSA 086-09
- TPIC 2011

(55 % OF 27.2 P.S.F. G.S.L. PLUS 8.4 P.S.F. RAIN LOAD) EQUALS 23.3 P.S.F. SPECIFIED ROOF LIVE LOAD

ALLOWABLE DEFL.(LL)= L/360 (0.20")
CALCULATED VERT. DEFL.(LL) = L/ 999 (0.00")
ALLOWABLE DEFL.(TL)= L/360 (0.20")
CALCULATED VERT. DEFL.(TL) = L/ 999 (0.05")

CSI: TC=0.39/1.00 (B-C:1) , BC=0.19/1.00 (E-F:4) , WB=0.08/1.00 (C-E:1) , SSI=0.14/1.00 (B-C:1)

DOL LUMBER=1.00 NAIL=1.00 LS BEND=1.10 COMP=1.10 SHEAR=1.10 TENS= 1.10

COMPANION LIVE LOAD FACTOR = 0.50

TRUSS PLATE MANUFACTURER IS NOT RESPONSIBLE FOR QUALITY CONTROL IN THE TRUSS MANUFACTURING PLANT .

NAIL VALUES

PLATE	GRIP(DRY) (PSI) MAX	MIN	SHEAR (PLI) MAX	MIN	SECTION (PLI) MAX	MIN
MT20	618	354	1667	788	1987	1656

PLATE PLACEMENT TOL. = 0.250 inches

PLATE ROTATION TOL. = 5.0 Deg.

JSI GRIP= 0.33 (B) (INPUT = 0.90)
JSI METAL= 0.12 (E) (INPUT = 1.00)

JOB NAME	TRUSS NAME	QUANTITY	PLY	JOB DESC.	DRWG NO.
313991	J03		1	TRUSS DESC. JT-39002	E-19112535

Alpa Roof Truss, Maple

Version 8.300 S Aug 9 2019 MiTek Industries, Inc. Fri Nov 8 13:12:25 2019 Page 1
ID:VRLqmclDiflZCj2mk6F92VyQuye-zJYJKu_jl0TlNMKXJI4akjhYkzHghtQze1eeOSyLFFq

Scale = 1:35.2

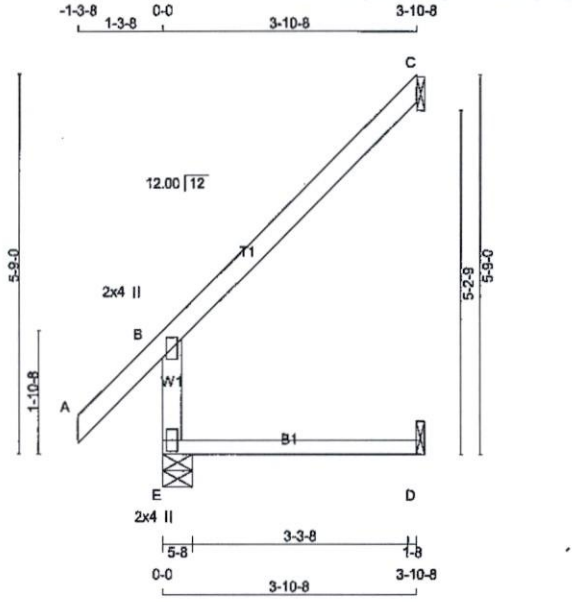

TOTAL WEIGHT = 2 X 14 = 27 lb

[M]

LUMBER

N. L. G. A. RULES

CHORDS	SIZE		LUMBER	DESCR.
E - B	2x4	DRY	No.2	SPF
A - C	2x4	DRY	No.2	SPF
E - D	2x3	DRY	No.2	SPF

DRY: SEASONED LUMBER.

PLATES (table is in inches)

JT	TYPE	PLATES	W	LEN Y	X
B	TMV+p	MT20	2.0	4.0	
E	BMV1+p	MT20	2.0	4.0	

NOTE: Lateral brace(s) shown shall be 2x4 SPF #2

LICENSED PROFESSIONAL ENGINEER
11/08/2019
R. TURENNE
100157040
PROVINCE OF ONTARIO

DIMENSIONS, SUPPORTS AND LOADINGS SPECIFIED BY FABRICATOR TO BE VERIFIED BY BUILDING DESIGNER

BEARINGS

JT	FACTORED GROSS REACTION VERT	HORZ	MAXIMUM FACTORED GROSS REACTION DOWN	HORZ	UPLIFT	INPUT BRG IN-SX	REQRD BRG IN-SX
E	366	0	366	0	0	5-8	1-8
C	123	0	123	0	0	1-8	1-8
D	30	0	33	0	0	1-8	1-8

SEE MITEK STANDARD DETAIL B97791H FOR CONNECTION TO JOINT(S) C , D

UNFACTORED REACTIONS

JT	1ST LCASE COMBINED	MAX./MIN. COMPONENT REACTIONS SNOW	LIVE	PERM.LIVE	WIND	DEAD	SOIL
E	257	178 / 0	0 / 0	0 / 0	0 / 0	79 / 0	0 / 0
C	85	68 / 0	0 / 0	0 / 0	0 / 0	17 / 0	0 / 0
D	24	0 / 0	0 / 0	0 / 0	0 / 0	24 / 0	0 / 0

BEARING MATERIAL TO BE SPF NO.2 OR BETTER AT JOINT(S) E

BRACING

TOP CHORD TO BE SHEATHED OR MAX. PURLIN SPACING = 6.25 FT.
MAX. UNBRACED BOTTOM CHORD LENGTH = 10.00 FT OR RIGID CEILING DIRECTLY APPLIED.

ALL PITCH BREAKS AND PERIMETER CORNER JOINTS MUST BE LATERALLY RESTRAINED.

LOADING

TOTAL LOAD CASES: (5)

CHORDS MEMB. FR-TO	MAX. FACTORED FORCE (LBS)	FACTORED VERT. LOAD (PLF) FROM	TO	LC1 MAX CSI (LC)	MAX. UNBRAC LENGTH	WEBS MEMB. FR-TO	MAX. FACTORED FORCE (LBS)	MAX CSI (LC)
E- B	-324 / 0	0.0	0.0	0.06 (4)	7.81			
A- B	0 / 42	-84.9	-84.9	0.14 (5)	10.00			
B- C	-29 / 0	-84.9	-84.9	0.22 (1)	6.25			
E- D	0 / 0	-18.5	-18.5	0.11 (4)	10.00			

CANTILEVER ANALYSIS HAS BEEN CONSIDERED IN THIS DESIGN

DESIGN CRITERIA

SPECIFIED LOADS:

TOP CH.	LL	=	23.3	PSF
	DL	=	6.0	PSF
BOT CH.	LL	=	0.0	PSF
	DL	=	7.4	PSF
TOTAL LOAD		=	36.7	PSF

SPACING = 24.0 IN. C/C

THIS TRUSS IS DESIGNED FOR RESIDENTIAL OR SMALL BUILDING REQUIREMENTS OF PART 9, NBCC 2010

THIS DESIGN COMPLIES WITH:
- PART 9 OF OBC 2012 , BCBC 2012 , ABC 2014
- CSA 086-09
- TPIC 2011

DESIGN ASSUMPTIONS
-OVERHANG NOT TO BE ALTERED OR CUT OFF.

(55 % OF 27.2 P.S.F. G.S.L. PLUS 8.4 P.S.F. RAIN LOAD) EQUALS 23.3 P.S.F. SPECIFIED ROOF LIVE LOAD

ALLOWABLE DEFL.(LL)= L/360 (0.19")
CALCULATED VERT. DEFL.(LL) = L/ 999 (0.00")
ALLOWABLE DEFL.(TL)= L/360 (0.19")
CALCULATED VERT. DEFL.(TL) = L/ 999 (0.02")

CSI: TC=0.22/1.00 (B-C:1) , BC=0.11/1.00 (D-E:4) , WB=0.00/1.00 (n/a:0) , SSI=0.11/1.00 (B-C:1)

DOL LUMBER=1.00 NAIL=1.00 LS BEND=1.10 COMP=1.10 SHEAR=1.10 TENS= 1.10

COMPANION LIVE LOAD FACTOR = 0.50

AUTOSOLVE RIGHT HEEL ONLY

TRUSS PLATE MANUFACTURER IS NOT RESPONSIBLE FOR QUALITY CONTROL IN THE TRUSS MANUFACTURING PLANT .

NAIL VALUES

PLATE	GRIP(DRY) (PSI) MAX	MIN	SHEAR (PLI) MAX	MIN	SECTION (PLI) MAX	MIN
MT20	618	354	1667	788	1987	1656

PLATE PLACEMENT TOL. = 0.250 inches

PLATE ROTATION TOL. = 5.0 Deg.

JSI GRIP= 0.26 (B) (INPUT = 0.90)
JSI METAL= 0.17 (B) (INPUT = 1.00)

SIMPSON Strong-Tie®

May 27, 2019

Re: Expiration Date for Technical Bulletins Extended to 12/31/2019

Please be advised that the expiration date of the Technical Bulletins listed below has been extended until December 31, 2019.

T-SPECCP17	T-SPECH17	T-SPECDSHGUS17R
T-SPECHGUS17-R	T-SPECHHUS17-R	T-SPECHUS17
T-SPECLF17	T-SPECLT17	T-SPECLU17
T-SPECCLUL17	T-SPECLUS17	T-SPECSUR17
T-SPECTBE17	T-SPECTC17	T-SPECTHGB17
T-SPECTHGBHV17	T-SPECTHGQ17	T-SPECTHGW17
T-SPECLSULSSU17	T-SPECHTHGQ17	T-SPECSTHGQ17

Should you have any questions or concerns regarding the above, please contact me at your convenience.

Sincerely,

Brent Bunting, P.Eng.
Simpson Strong-Tie Canada, Ltd.

LICENSED PROFESSIONAL ENGINEER
5/28/2019
B. D. BUNTING
PROVINCE OF ONTARIO

LUS – Double Shear Joist Hangers

SIMPSON Strong-Tie®

All LUS hangers have double shear nailing. This patented innovation distributes the load through two points on each joist nail for greater strength. It also allows the use of fewer nails, faster installation and the use of common nails for all connections.

Material: 18 gauge

Finish: G90 galvanized

Design:

- Factored resistances are in accordance with CSA O86-14.
- Uplift resistances have been increased 15%. No further increase is permitted.
- Wood shear is not considered in the factored resistances given. The specifier must ensure that the joist and header capacities are capable of withstanding these loads.

Installation:

- Use all specified fasteners.
- Nails: 16d = 0.162" dia. x 3½" long common wire, 10d = 0.148" x 3" long common wire.
- Double shear nails must be driven at an angle through the joist or truss into the header to achieve the table loads.
- Not designed for welded or nailer applications.

Options:

- These hangers cannot be modified

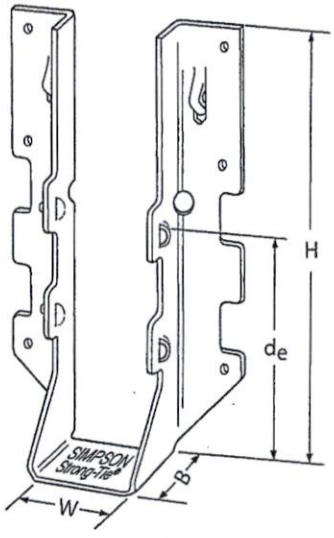

LUS28

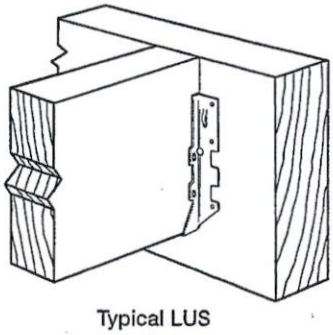

Typical LUS Installation

Model No.	Ga.	Dimensions (in.)				Fasteners		Factored Resistance (lb.)			
								D.Fir-L		S-P-F	
		W	H	B	d_e[1]	Face	Joist	Uplift (K_D=1.15)	Normal (K_D=1.00)	Uplift (K_D=1.15)	Normal (K_D=1.00)
LUS24	18	1 9/16	3 1/8	1 3/4	1 15/16	(4) 10d	(2) 10d	710	1630	645	1155
LUS24-2	18	3 1/8	3 1/8	2	1 13/16	(4) 16d	(2) 16d	835	2020	590	1435
LUS26	18	1 9/16	4 3/4	1 3/4	3 5/8	(4) 10d	(4) 10d	1420	2170	1290	1630
LUS26-2	18	3 1/8	4 7/8	2	4	(4) 16d	(4) 16d	1720	2595	1545	1920
LUS26-3	18	4 5/8	4 3/16	2	3 1/4	(4) 16d	(4) 16d	1720	2595	1545	2340
LUS28	18	1 9/16	6 5/8	1 3/4	3 3/4	(6) 10d	(6) 10d	1420	2520	1290	1790
LUS28-2	18	3 1/8	7	2	4	(6) 16d	(4) 16d	1720	3325	1545	2575
LUS28-3	18	4 5/8	6 1/4	2	3 1/4	(6) 16d	(4) 16d	1720	3325	1545	2375
LUS210	18	1 9/16	7 13/16	1 3/4	3 7/8	(8) 10d	(4) 10d	1420	2785	1290	2210
LUS210-2	18	3 1/8	9	2	6	(8) 16d	(6) 16d	2580	4500	2320	3195
LUS210-3	18	4 5/8	8 3/16	2	5 1/4	(8) 16d	(6) 16d	2580	3345	2320	2375

1. d_e is the distance from the seat of the hanger to the highest joist nail.

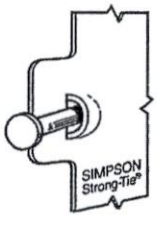

Dome Double Shear Nailing prevents tabs breaking off (available on some models).

U.S. Patent 5,603,580

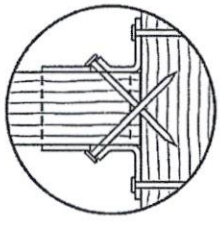

Double Shear Nailing Top View.

LICENSED PROFESSIONAL ENGINEER
4/5/2017
B. D. BUNTING
PROVINCE OF ONTARIO

LIMIT STATES DESIGN

This technical bulletin is effective until June 30, 2019, and reflects information available as of March 1, 2017. This information is updated periodically and should not be relied upon after June 30, 2019. Contact Simpson Strong-Tie for current information and limited warranty or see strongtie.com.

© 2017 Simpson Strong-Tie Company Inc.

(800) 999-5099
strongtie.com

TECHNICAL BULLETIN

HUS/LJS – Double Shear Joist Hangers

SIMPSON Strong-Tie®

All hangers have double shear nailing. This patented innovation distributes the load through two points on each joist nail for greater strength. It also allows the use of fewer nails, faster installation and the use of common nails for all connections. Do not bend or remove tabs.

Material: See table

Finish: G90 galvanized

Design:

- Factored resistances are in accordance with CSA O86 -14.
- Uplift resistances have been increased 15%. No further increase is permitted.
- Wood shear is not considered in the factored resistances given. The specifier must ensure that the joist and header capacities are capable of withstanding these loads.

Installation:

- Use all specified fasteners
- Nails: 16d = 0.162" dia. x 3½" long common wire
- Double shear nails must be driven at an angle through the joist or truss into the header to achieve the table loads
- Not designed for welded or nailer applications

Options:

- See current catalogue for options

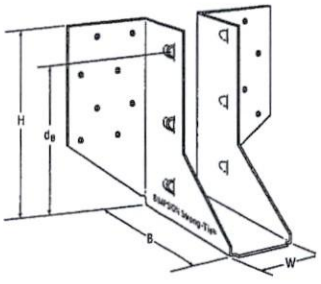

LJS26DS

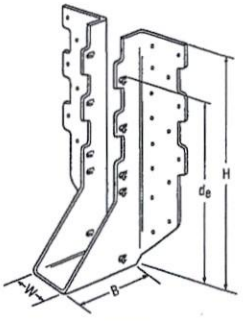

HUS210
(HUS26, HUS28, similar)

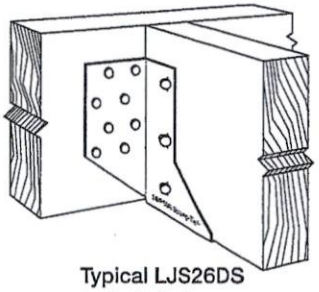

Typical LJS26DS Installation

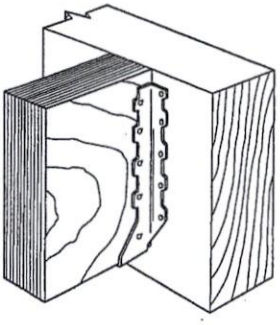

Typical HUS Installation

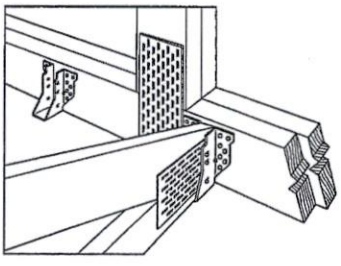

Typical HUS Installation
(Truss Designer to provide fastener quantity for connecting multiple members together)

Model No.	Ga.	Dimensions (in.)				Fasteners		Factored Resistance (lb.)			
								D.Fir-L		S-P-F	
		W	H	B	d_e[1]	Face	Joist	Uplift (K_D=1.15)	Normal (K_D=1.00)	Uplift (K_D=1.15)	Normal (K_D=1.00)
								lb.	lb.	lb.	lb.
LJS26DS	18	1 9/16	5	3½	4⅝	(16) 16d	(6) 16d	2055	4265	1460	4115
HUS26	16	1⅝	5⅜	3	3 15/16	(14) 16d	(6) 16d	2705	4940	2065	3875
HUS28	16	1⅝	7 3/32	3	6 3/32	(22) 16d	(8) 16d	3605	5365	2675	4345
HUS210	16	1⅝	9 3/32	3	7 31/32	(30) 16d	(10) 16d	4505	5795	4010	4740
HUS1.81/10	16	1 13/16	9	3	8	(30) 16d	(10) 16d	4505	6450	4010	5200

1. d_e is the distance from the seat of the hanger to the highest joist nail.

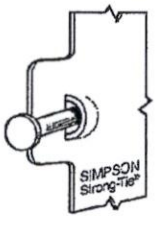

Dome Double Shear Nailing prevents tabs breaking off (available on some models).

U.S. Patent 5,603,580

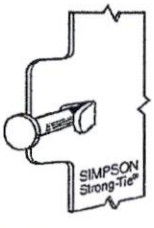

Double Shear Nailing Side View. Do not bend tab back.

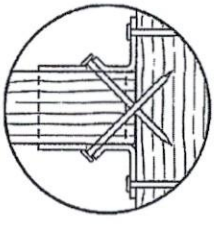

Double Shear Nailing Top View.

LIMIT STATES DESIGN

This technical bulletin is effective until June 30, 2019, and reflects information available as of March 1, 2017. This information is updated periodically and should not be relied upon after June 30, 2019. Contact Simpson Strong-Tie for current information and limited warranty or see strongtie.com.

© 2017 Simpson Strong-Tie Company Inc.

T-SPECHUS17 3/17 exp. 6/19

(800) 999-5099
strongtie.com

HHUS – Double Shear Joist Hangers

SIMPSON Strong-Tie®

All HHUS hangers have double shear nailing. This patented innovation distributes the load through two points on each joist nail for greater strength. It also allows the use of fewer nails, faster installation and the use of common nails for all connections. Do not bend or remove tabs.

Material: 14 gauge

Finish: G90 galvanized

Design:

- Factored resistances are in accordance with CSA O86-14.
- Uplift resistances have been increased 15%. No further increase is permitted.
- Wood shear is not considered in the factored resistances given. The specifier must ensure that the joist and header capacities are capable of withstanding these loads.

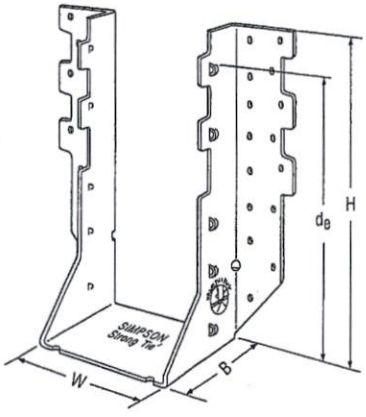

HHUS410

Installation:

- Use all specified fasteners
- Nails: 16d = 0.162" dia. x 3½" long common wire
- Double shear nails must be driven at an angle through the joist or truss into the header to achieve the table loads
- Not designed for welded or nailer applications

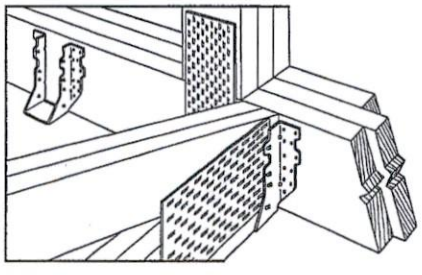

Typical HHUS Installation (Truss Designer to provide fastener quantity for connecting multiple members together)

Options:

- See current catalogue for options

Model No.	Ga.	Dimensions (in.)				Fasteners		Factored Resistance (lb.)			
								D.Fir-L		S-P-F	
		W	H	B	d_e[1]	Face	Joist	Uplift (K_D=1.15)	Normal (K_D=1.00)	Uplift (K_D=1.15)	Normal (K_D=1.00)
HHUS26-2	14	3 5/16	5 13/16	3	3 15/16	(14) 16d	(6) 16d	2850	7335	2065	5205
HHUS28-2	14	3 5/16	7 7/32	3	6 5/32	(22) 16d	(8) 16d	3765	8940	2675	6345
HHUS210-2	14	3 5/16	9 3/32	3	8	(30) 16d	(10) 16d	4745	9660	4310	7000
HHUS210-3	14	4 11/16	9	3	7 15/16	(30) 16d	(10) 16d	4745	10545	4310	7485
HHUS210-4	14	6 1/8	8 29/32	3	7 27/32	(30) 16d	(10) 16d	4745	10545	4310	7485
HHUS46	14	3 5/8	5 13/32	3	3 15/16	(14) 16d	(6) 16d	2540	7335	2065	5205
HHUS48	14	3 5/8	7 1/8	3	6 1/8	(22) 16d	(8) 16d	3765	8945	2267	6345
HHUS410	14	3 5/8	9	3	8	(30) 16d	(10) 16d	4745	9855	4310	7000
HHUS5.50/10	14	5 1/2	9	3	8	(30) 16d	(10) 16d	4745	10545	4310	7485
HHUS7.25/10	14	7 1/4	9	3 5/16	7 29/32	(30) 16d	(10) 16d	4745	10770	4310	7650

1. d_e is the distance from the seat of the hanger to the highest joist nail.

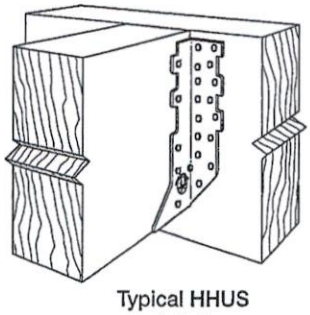

Typical HHUS Installation

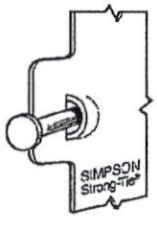

Dome Double Shear Nailing prevents tabs breaking off (available on some models).

U.S. Patent 5,603,580

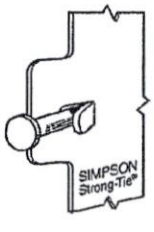

Double Shear Nailing Side View. Do not bend tab back.

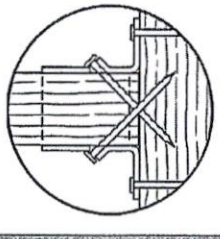

Double Shear Nailing Top View.

LIMIT STATES DESIGN

This technical bulletin is effective until June 30, 2019, and reflects information available as of March 1, 2017. This information is updated periodically and should not be relied upon after June 30, 2019. Contact Simpson Strong-Tie for current information and limited warranty or see strongtie.com.

© 2017 Simpson Strong-Tie Company Inc.

(800) 999-5099
strongtie.com

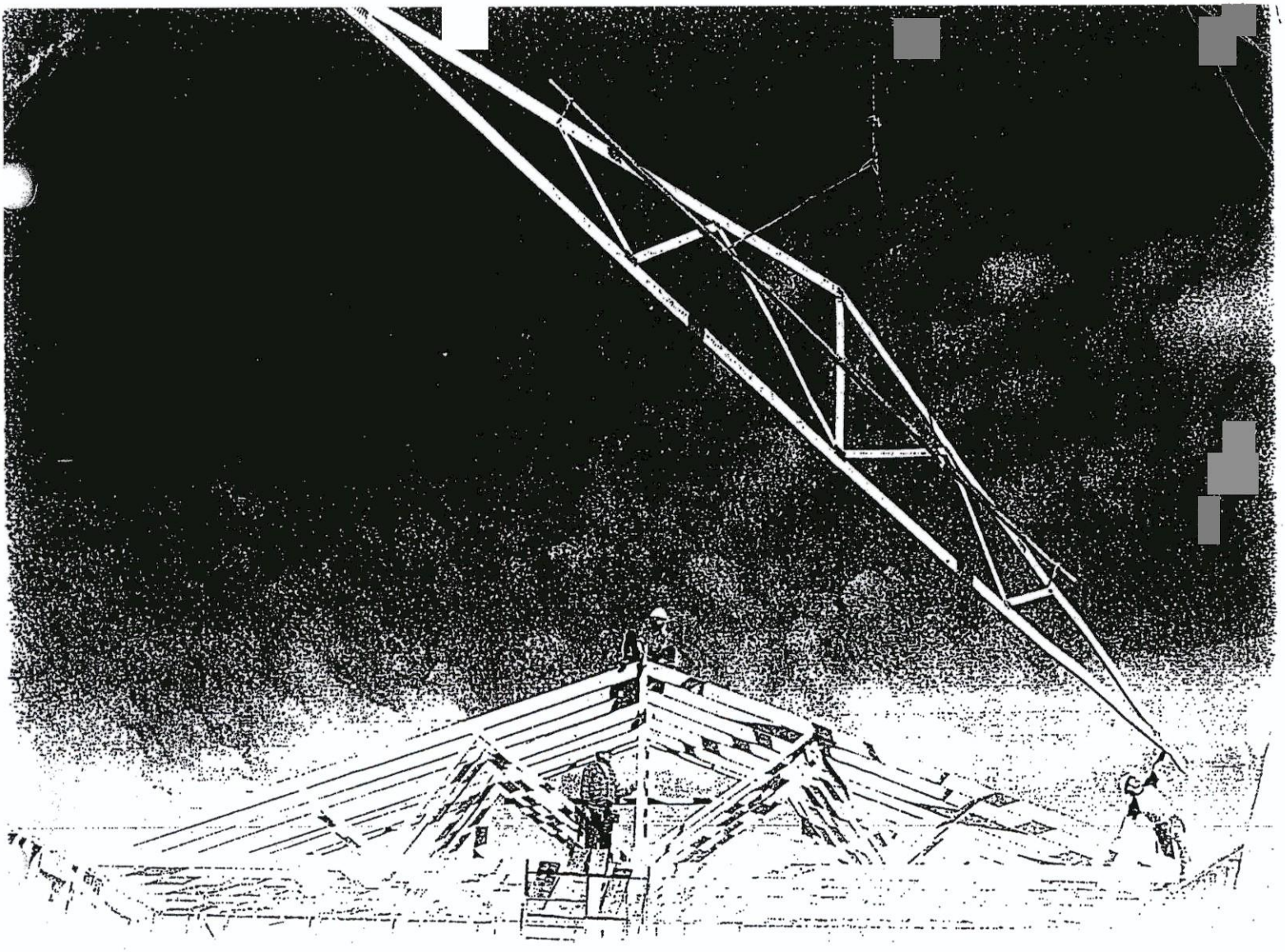

Wood Truss Installation

A Guide to proper handling, erecting and bracing metal plate connected wood trusses

Table of Content

Warning.....4

1 Unloading & Lifting.....5

2 Job Site Handling.....5

3 Hoisting.....6

4 Beginning the Erection Process.....7

5 Erection Tolerance.....8

6 Bracing.....8

7 Bracing Requirements for 3 Planes of Roof.....9

8 Stacking Materials.....10

Caution Notes.....11

Warning

General

Familiarity with the **Construction Design Documents**, the **Truss Design Drawings**, and **Truss Placement Plans** (if required by the **Construction Design Documents**) is required to properly erect, brace, and connect the trusses to the building system.

All of the care and quality involved in the design and manufacture of wood trusses can be jeopardized if the trusses are not properly handled, erected, and braced.

The consequences of improper handling, erecting, and bracing may be a collapse of the structure, which at best is a substantial loss of time and materials, and at worst is a loss of life. The majority of truss accidents occur during truss installation and not as a result of improper design or manufacture.

Prior to truss erection, the builder/erector shall meet with the erection crew for a safety and planning meeting, making sure each crew member understands his or her roles and responsibilities during the erection process.

Temporary Erection Bracing

Trusses are not marked in any way to identify the frequency, or location of temporary erection bracing.

All temporary bracing shall comply with the latest edition of *Commentary and Recommendations for Handling, Installing & Bracing Metal Plate Connected Wood Trusses* (HIB), published by the Truss Plate Institute, and/or as specified in the **Construction Design Documents** prepared by the building designer.

Permanent Truss Bracing

Permanent bracing for the roof or floor trusses is the responsibility of the building designer and should be shown on the **Construction Design Documents**. Permanent bracing locations for individual compression members of a wood truss are shown on the **Truss Design Drawings**, and shall be installed by the building or erection contractor. This bracing is needed for the proper performance of individual trusses within the roof or floor system. The design and connection of the bracing to the truss and then to the overall building system is the responsibility of the building designer, and is in addition to the permanent bracing plan, which is also specified by the building designer.

Special Design Requirements

Special design requirements, such as wind bracing, portal bracing, seismic bracing, diaphragms, shear walls, or other load transfer elements and their connections to wood trusses must be considered separately by the building designer, who shall determine size, location, and method of connections for all bracing as needed to resist these forces.

1 Unloading & Lifting

Never handle trusses flat

Beginning with the unloading process, and throughout all phases of construction, care must be taken to avoid **lateral bending** of trusses, which can cause damage to the lumber and metal connector plates at the joints.

Avoid lateral bending

- **Use special care in windy weather.**
- **If using a crane within 10 feet of an electric line, contact the local power company.**
- **If using a crane within 5 miles of an airport, contact the airport 30 days prior to erection to learn about any safety regulations that must be followed.**

2 Job Site Handling

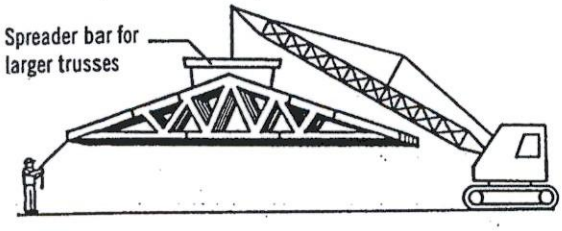

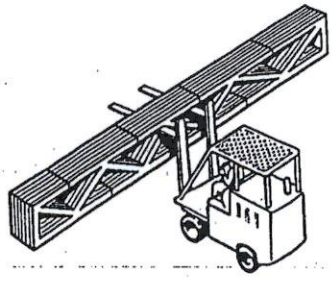

All trusses should be picked up at the top chords in a vertical position only

Proper banding and smooth ground allow for unloading of trusses without damage. This should be done as close to the building site as possible to minimize handling. **Do not** break banding until installation begins. Hand erection of trusses is allowed, provided excessive lateral bending is prevented.

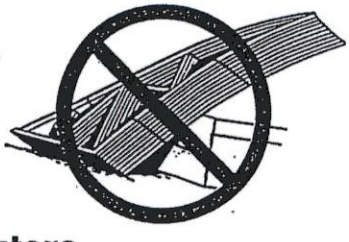

Do not store unbraced bundles upright

If trusses are stored vertically they shall be braced in a manner that will prevent tipping or topping. Generally cuting of the banding is done just prior to installation.

Do not store on uneven ground

If trusses are stored horizontally, blocking should be used on eight to ten foot centers, or as required, to minimize lateral bending and moisture gain.

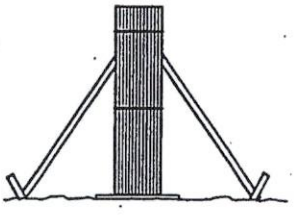

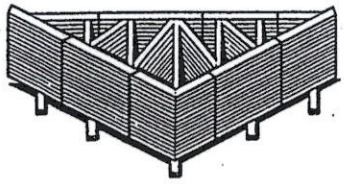

Care should be exercised when removing banding to avoid damaging trusses.

During long term storage, trusses shall be protected from the environment in a manner that provides for adequate ventilation of the trusses. If tarpaulins or other material is used, the ends shall be left open for ventilation. Plastic is not recommended, since it can trap moisture.

3 Hoisting

All trusses that are erected one at a time shall be held safely in position by the erection equipment until such time as all necessary bracing has been installed and the ends of the trusses are securely fastened to the building.

Avoid lateral bending

L ≤ 30'

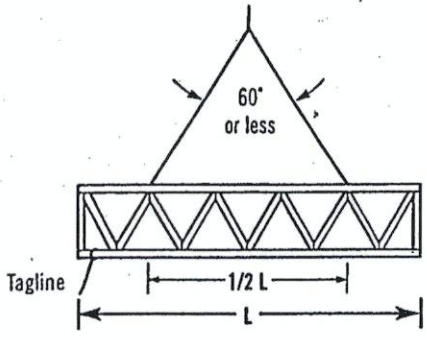

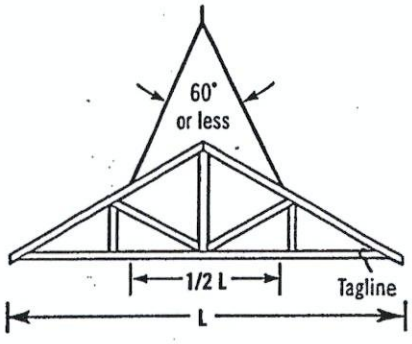

Truss sling is acceptable where these criteria are met.

30' < L ≤ 60'

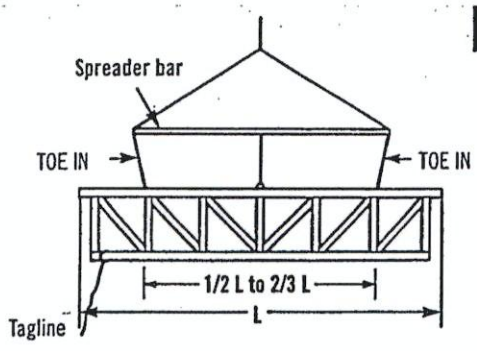

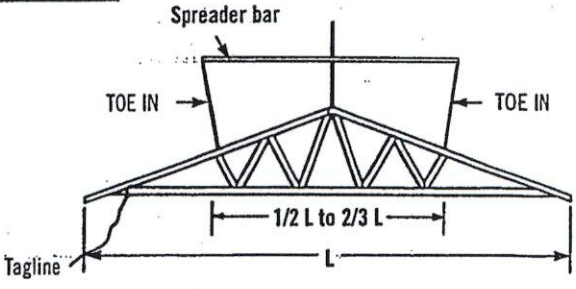

Use spreader bar in all other cases. It should be noted that the lines from the ends of the spreader bar **"TOE IN"**; if these lines should **"TOE OUT"** the truss may fold in half.

L > 60'

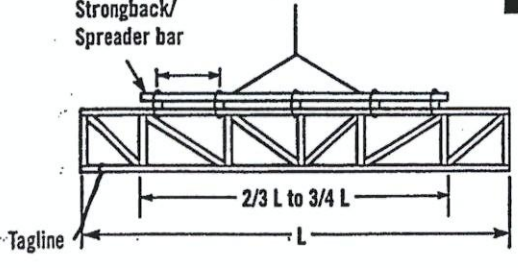

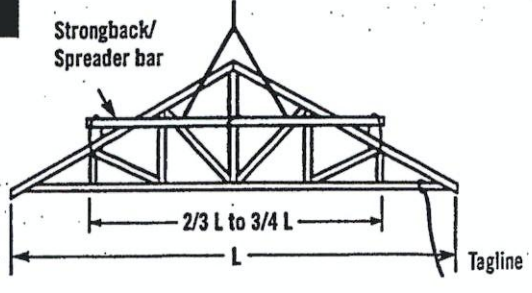

For lifting trusses with spans in excess of 60 feet, it is recommended that a strongback/spreader bar be used as illustrated. The strongback/spreader bar should be attached to the top chord and web members at intervals of approximately 10 feet. Further, the strongback/spreader bar should be at or above the mid-height of the truss to prevent overturning. The strongback/spreader bar can be of any material with sufficient strength to safely carry the weight of the truss and sufficient rigidity to adequately resist bending of the truss.

4 Beginning the Erection Process

It is important for the builder or erection contractor to provide substantial bracing for the first truss erected. The two or more trusses making up the rest of the first set are tied to and rely upon the first truss for stability. Likewise, after this first set of trusses is adequately cross-braced, the remaining trusses installed rely upon this first set for stability. Thus, the performance of the truss bracing system depends to a great extent on how well the first group of trusses is braced.

Ground Brace – Exterior

One satisfactory method ties the first unit of trusses off to a series of braces that are attached to a stake driven into the ground and securely anchored. The ground brace itself should be supported as shown below or it is apt to buckle. Additional ground braces in the opposite direction, inside the building, are also recommended.

Ground Brace – Interior

Another satisfactory method where height of building or ground conditions prohibit bracing from the exterior is to tie the first truss rigidly in place from the interior at the floor level, provided the floor is substantially completed and capable of supporting the ground bracing forces. Securely fasten the first truss to the middle of the building. Brace the bracing similar to exterior ground bracing shown at left. Set trusses from the middle toward the end of the building. Properly cross-brace the first set of trusses before removing floor braces and setting remaining trusses.

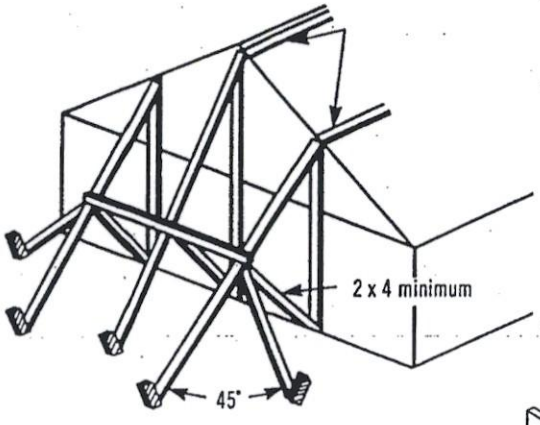

Note: Locate ground braces for first truss directly in line with all rows of top chord continuous lateral bracing (either temporary or permanent).

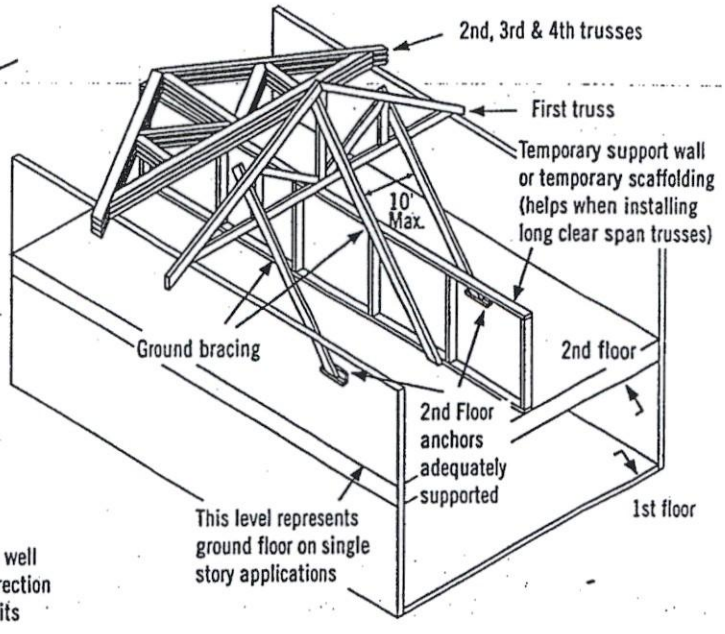

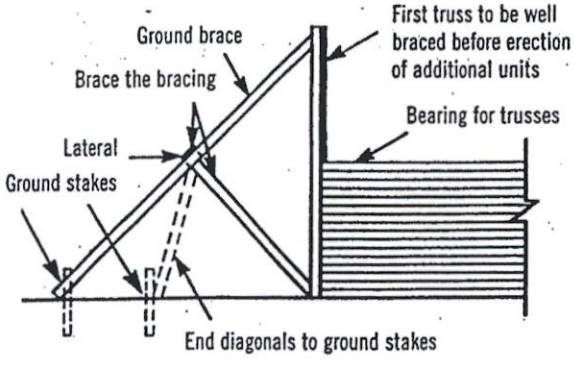

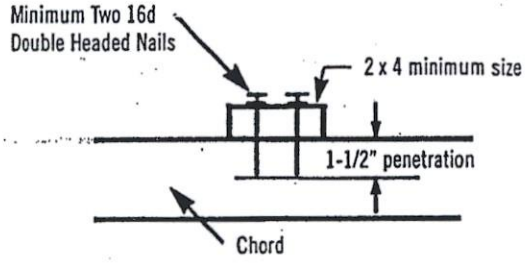

Inadequate size of bracing material or inadequate fastening is a major cause of erection dominoing.

5 Erection Tolerance

Complying with erection tolerances is critical to achieving an acceptable roof or floor line, and to accomplishing effective bracing. Setting trusses within tolerance the first time will prevent the need for the hazardous practice of respacing or adjusting trusses when roof sheathing or roof purlins are installed. Trusses leaning or bowing can cause nails to miss the top chords when sheathing is applied, and create cumulative stresses on the bracing, which is a frequent cause of dominoing.

When sheathing, make sure nails are driven into the top chord of the trusses.

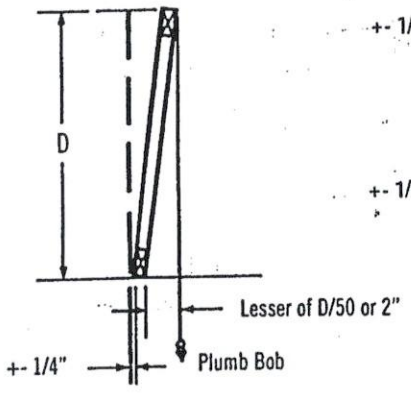

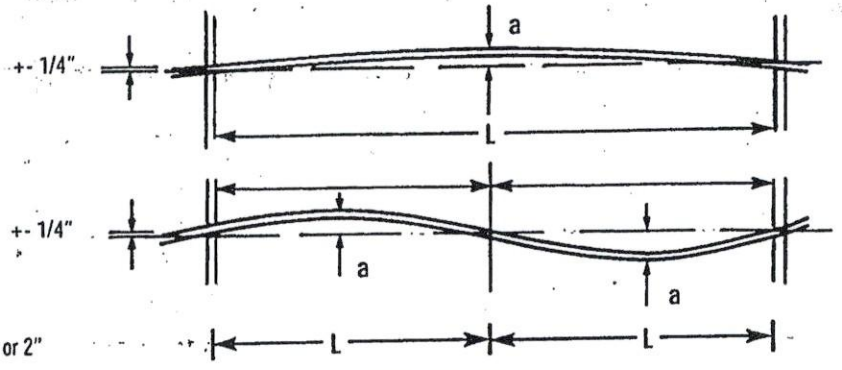

L = 16' to 32', a = 1"
L = 32' & over, a = 2"

6 Bracing

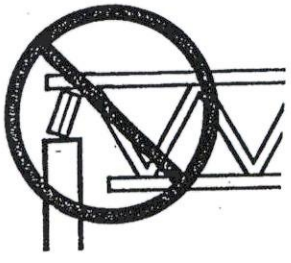

Do not install trusses on temporarily connected supports

Do not walk on unbraced trusses

Do not walk on trusses or gable ends lying flat

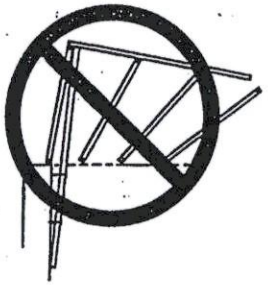

Nails in withdrawal (parallel to force)

All anchors, hangers, tie-downs, seats, bearing ledgers, etc., that are part of the supporting structure shall be accurately and properly placed and permanently attached before truss installation begins. No trusses shall ever be installed on anchors or ties that have temporary connections to the supporting structure.

Nailing scabs to the end of the building to brace the first truss is not recommended.
All nailing of bracing should be done so that nails are driven perpendicular to the direction of force, as shown at right.

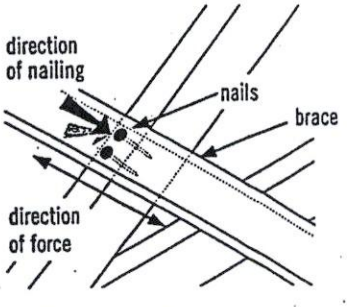

Well nailed (perpendicular to force)

7 Bracing Requirements for 3 Planes of Roof

Temporary erection bracing must be applied to three planes of the roof system to ensure stability: Plane 1) **Top Chord** (sheathing), Plane 2) **Bottom Chord** (ceiling plane), and Plane 3) **Web Member** plane or vertical plane perpendicular to trusses.

1) Top Chord Plane

Most important to the builder or erection contractor is bracing in the plane of the top chord. Truss top chords are susceptible to lateral buckling before they are braced or sheathed.

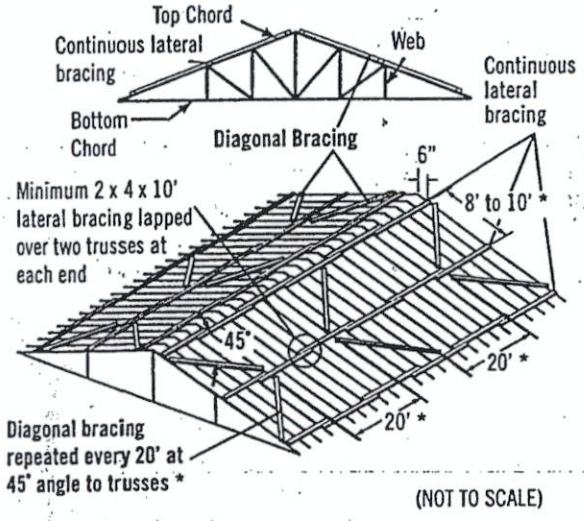

(NOT TO SCALE)

Exact spacing between trusses should be maintained as bracing is installed to avoid the hazardous practice of removing bracing to adjust spacing. This act of "adjusting spacing" can cause trusses to topple if connections are removed at the wrong time.

2) Bottom Chord Plane

In order to hold proper spacing on the bottom chord, temporary bracing is recommended on the top of the bottom chord.

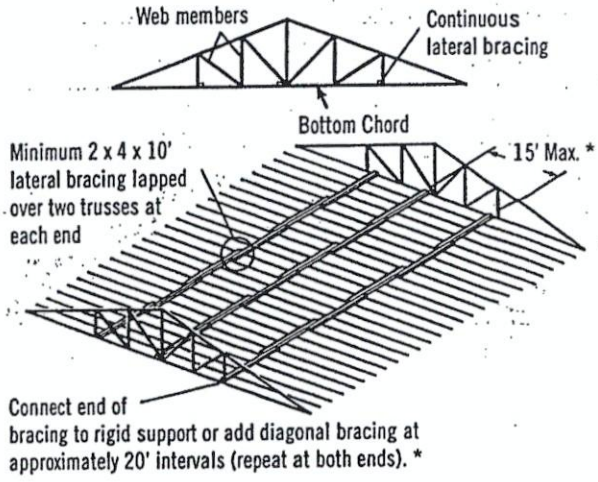

* Long spans, heavy loads or other spacing configurations may require closer spacing between lateral bracing and closer intervals between diagonals. Consult the building designer or HIB and DSB (*Recommended Design Specification for Temporary Bracing of Metal-Plate Connected Wood Trusses*) for details.

Diagonal or cross-bracing is very important!

3) Web Member Plane

"X" bracing, as shown, is critical in preventing trusses from leaning or dominoing. Repeat as shown to create a succession of rigid units.

X-bracing should be installed on vertical web members wherever possible, at or near lateral bracing. Plywood or OSB may be substituted for X-bracing.

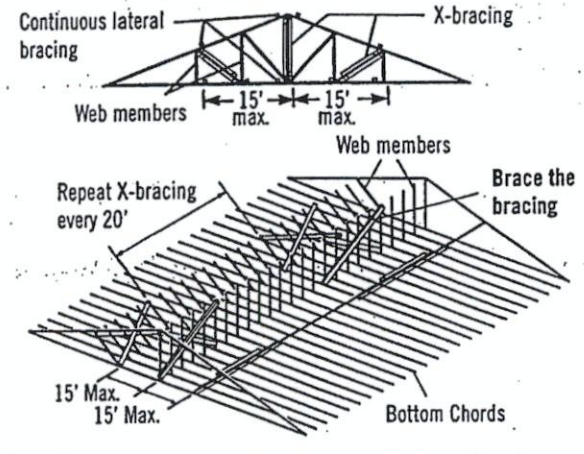

Note: Top chords and some web members are not shown, in order to make drawings more readable.

Do not use short blocks to brace individual trusses without a specific bracing plan detailing their use

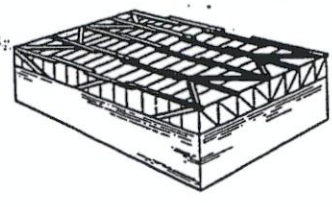

Bracing requirements using the same principles apply to parallel chord trusses

8 Stacking Materials

Do not proceed with building completion until all bracing is securely and properly in place

Never stack materials on unbraced or inadequately braced trusses

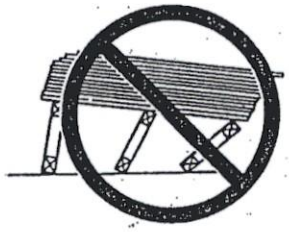

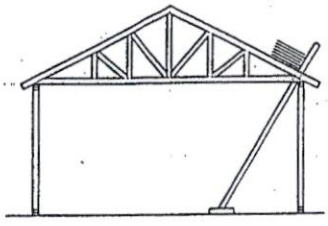

Proper distribution of construction materials is a must during construction.

Never stack materials near a peak

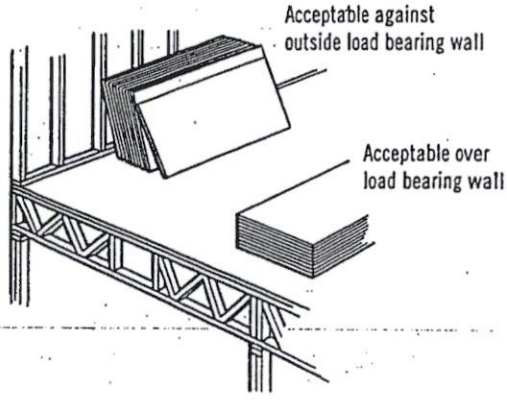

Never stack materials on the cantilever of a truss

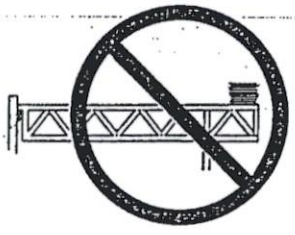

Always stack materials over two or more trusses.

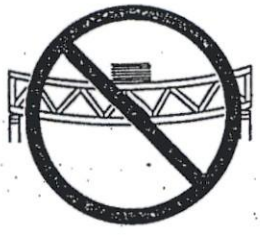

Never overload small groups or single trusses. Position load over as many trusses as possible.

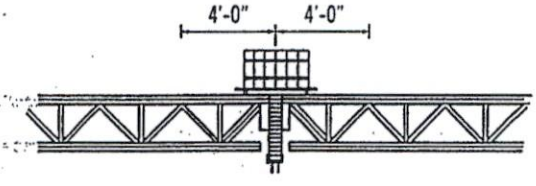

Roofing and mechanical contractors are cautioned to stack materials only along outside supporting members or directly over inside supporting members. Trusses are not designed for dynamic loads (i.e., moving vehicles). Extreme care should be taken when loading and stacking construction materials (rolled roofing, mechanical equipment, etc.) on the roof or floor system.

Never cut any structural member of a truss.

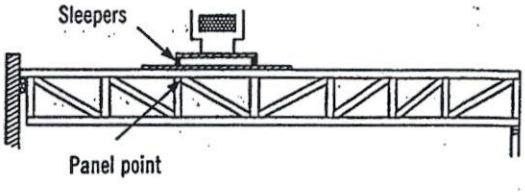

Sleepers for mechanical equipment should be located at panel points (joints) or over main supporting members, and only on trusses that have been designed for such loads.

Caution Notes

Errors in building lines and/or dimensions, or errors by others shall be corrected by the contractor or responsible construction trade subcontractor or supplier **before** erection of trusses begins.

Cutting of nonstructural overhangs is considered a part of normal erection and shall be done by the builder or erection contractor.

Any field modification that involves the cutting, drilling, or relocation of any structural truss member or connector plate shall not be done without the approval of the truss manufacturer or a licensed design professional.

The methods and procedures outlined are intended to ensure that the overall construction techniques employed will put floor and roof trusses **safely** in place in a completed structure. These recommendations for bracing wood trusses originate from the collective experience of leading technical personnel in the wood truss industry, but must, due to the nature of responsibilities involved, be presented only as a **guide** for use by a qualified building designer, builder, or erection contractor. Thus, the Wood Truss Council of America expressly disclaims any responsibility for damages arising from the use, application, or reliance on the recommendations and information contained herein.

[Selected text and figures referenced or reproduced from HIB and DSB by permission of the Truss Plate Institute, Madison, WI.]

THE CANADIAN WOOD TRUSS ASSOCIATION

L'ASSOCIATION CANADIENNE DES FABRICANTS DE FERMES DE BOIS

1400 Blair Place, Suite 210, Ottawa, ON K1J 9B8
Tel.: 613-747-5544 Fax: 613-747-6264

Wood Truss Council of America

One WTCA Center
6300 Enterprise Lane, Madison, WI 53719-1140
Tel.: 608-274-4849 Fax: 608-274-3329
wtca@woodtruss.com www.woodtruss.com

ALPA-BARRIE

CITY OF BRAMPTON
BUILDING DIVISION
REVIEWED
DEC 11 2019
BY MARY RENETTE

For conventional framing roof / cellings framing shall conform to OBC.9.23

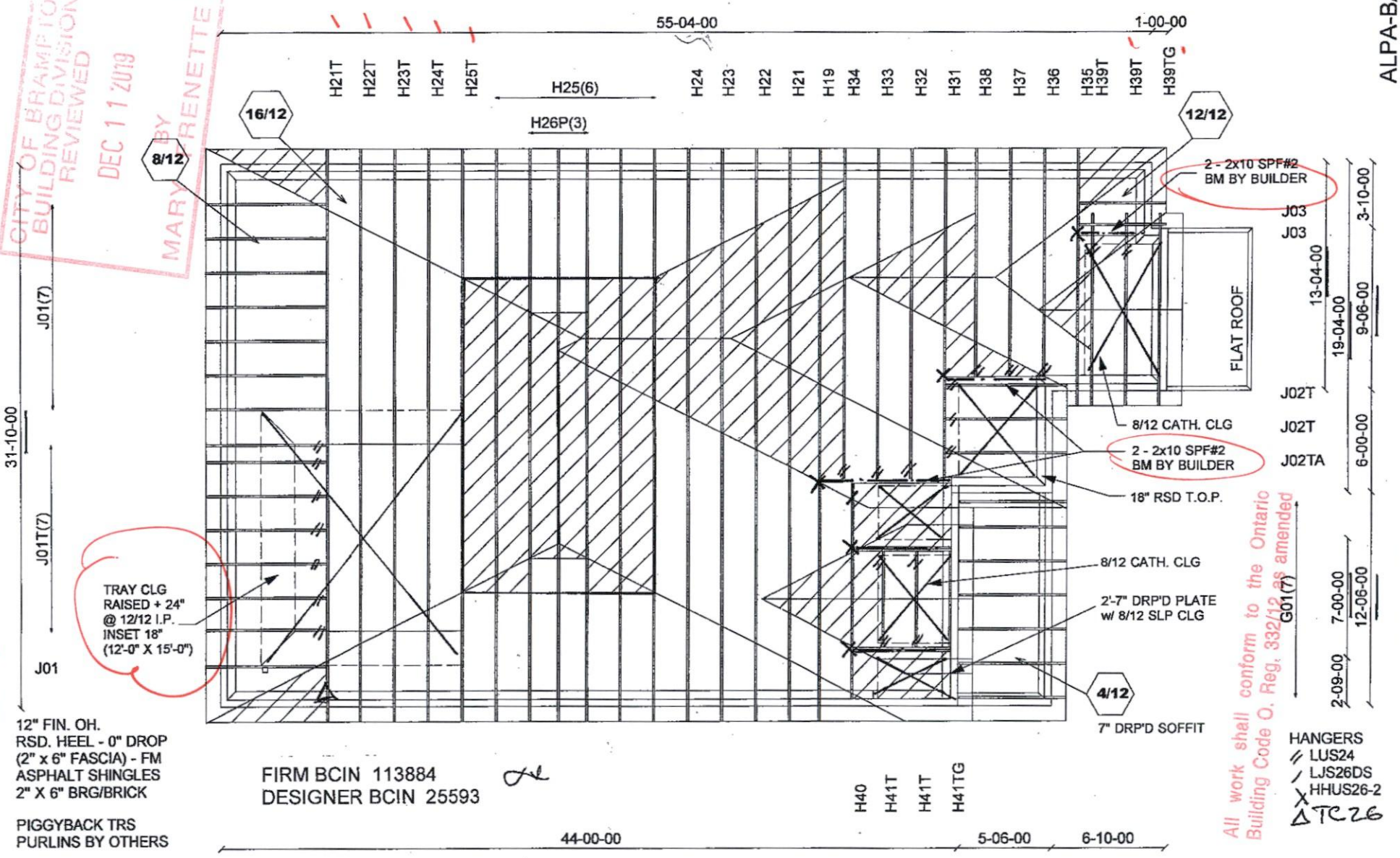

12" FIN. OH.
RSD. HEEL - 0" DROP
(2" x 6" FASCIA) - FM
ASPHALT SHINGLES
2" X 6" BRG/BRICK

PIGGYBACK TRS
PURLINS BY OTHERS

FIRM BCIN 113884
DESIGNER BCIN 25593

All work shall conform to the Ontario Building Code O. Reg. 332/12 as amended

HANGERS
// LUS24
/ LJS26DS
X HHUS26-2
Δ TC26

E19112510 – E19112541 THE COPLAND

Mitek V. 8.2.0

ALL CONVENTIONAL FRAMING TO CONFORM WITH PART 9 O.B.C. LATEST EDITION. ROOF RAFTERS THAT CROSS OVER TRUSSES TO BE 2X4 SPF #2 @ 24" O.C WITH A VERT. POST TO THE TRUSS UNDERNEATH AT EACH CROSS POINT. VERT. POSTS LONGER THAN 6' TO HAVE LATERAL BRACING SO THAT THE DISTANCE BETWEEN END POINTS & BETWEEN ROWS OF BRACING DOES NOT EXCEED 6'

CONVENTIONAL FRAMING BY OTHERS

Job Track: 39002	Builder / Location: GOLD PARK HOMES / BRAMPTON	Model / Elevation: 38-10 REV1 / B OPT TRAY	
Layout ID: 314234	Project: MCLAUGHLIN AND MAYFIELD/ENCORE 2	THESE DRAWINGS CONSTITUTE THE PROPERTY OF ALPA ROOF TRUSSES INC., SHALL NOT BE REPRODUCED, PUBLISHED, OR REDISTRIBUTED IN ANY MANNER OR UTILIZED FOR ANY PURPOSE OTHER THAN THE MANUFACTURE OF TRUSSES BY ALPA ROOF TRUSSES INC AND WILL BE RETRACTED BY ALPA ROOF TRUSSES INC IF UTLILZED FOR ANY OTHER PURPOSE.	
Plan Log: 104619	Date: 2019-10-31 Designer: AMANDA		

EWP DESIGN INC.

(905) 832-2250 FAX (905) 832-0286

RESPONSIBILITIES AND SPECIFICATIONS

RESPONSIBILITIES

1. EWP DESIGN INC. is responsible for the design of trusses as individual components.
2. It is the responsibility of others to ascertain that the design loads utilized on each drawing meet or exceed the actual dead load imposed by the structure, the live load imposed by the intended use and the snow load imposed by local building code or authorities with jurisdictions.
3. All dimensions are to be verified by the owner, contractor, architect or other authorities with jurisdictions before truss fabrication.
4. EWP DESIGN INC. bears no responsibility for the erection of trusses. Persons erecting trusses are cautioned to seek professional advice regarding the temporary and permanent bracing for the system. Bracing shown on EWP DESIGN INC. drawing is specified for the truss as a component only and forms an integral part of the truss design.
5. It is the truss manufacturer's responsibility to ensure that trusses are manufactured in conformance with specifications of EWP DESIGN INC. as outlined below.

SPECIFICATIONS

1. Trusses designed by EWP DESIGN INC. conform to the relevant section of the Ontario Building Code of Canada (Part 9 or Part 4) or to the Canadian code for farm buildings, whichever applies to the building type, as indicated on the EWP DESIGN INC. drawings, and conform to the design procedures established by the Truss Plate Institute of Canada. Unit stresses used for truss designs are as per the edition of CSA-O86 shown on EWP DESIGN INC. drawings.
2. Lumber is to be the size, species and grade as specified on EWP DESIGN INC. drawings.
3. Moisture content of lumber shall not exceed 19% in service unless specified otherwise.
4. Metal connector plates shall be applied to both faces of truss at each joint and shall be positioned as specified.
5. Top chords of trusses are assumed to be continuously braced laterally by roof sheathing or by purlins at intervals not exceeding 12.5 times the thickness of top chord member.
6. Bottom chords shall be laterally braced at intervals not exceeding 3M (10') o.c., where rigid ceiling is not applied directly to the underside of chords.

THESE DRAWINGS CONSTITUTE THE PROPERTY OF EWP DESIGN INC., SHALL NOT BE REPRODUCED, PUBLISHED, OR REDISTRIBUTED IN ANY MANNER OR UTILIZED FOR ANY PURPOSE OTHER THAN THE MANUFACTURE OF TRUSSES BY THE ALPA LUMBER GROUP, AND WILL BE RETRACTED BY EWP DESIGN INC. IF UTILIZED FOR ANY OTHER PURPOSE.

JOB NAME	TRUSS NAME	QUANTITY	PLY	JOB DESC. / TRUSS DESC.	DRWG NO.
313991	G01		1	JT-39002	E-19112510

Alpa Roof Truss, Maple

Version 8.300 S Aug 9 2019 MiTek Industries, Inc. Fri Nov 8 13:10:57 2019 Page 1
ID:VRLqmclDiflZCj2mk6F92VyQuye-YOE2sowWT_NEpqbd9pVyA92UcUDU44d0PKJ?IYyLFHC

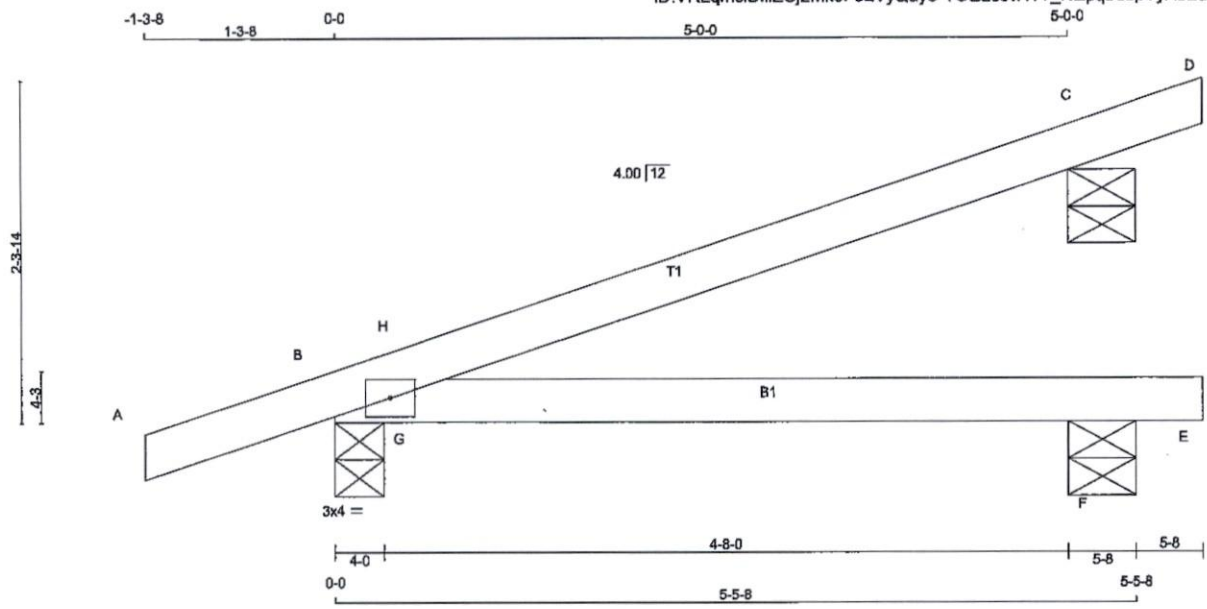

TOTAL WEIGHT = 7 X 16 = 109 lb

LUMBER
N. L. G. A. RULES

CHORDS	SIZE		LUMBER	DESCR.
A - D	2x4	DRY	No.2	SPF
B - E	2x4	DRY	No.2	SPF

DRY: SEASONED LUMBER.

PLATES (table is in inches)

JT	TYPE	PLATES	W	LEN Y	X
B	TMB1-I	MT20	3.0	4.0	

NOTE: Lateral brace(s) shown shall be 2x4 SPF #2

LICENSED PROFESSIONAL ENGINEER
11/08/2019
R. TURENNE
100157040
PROVINCE OF ONTARIO

DIMENSIONS, SUPPORTS AND LOADINGS SPECIFIED BY FABRICATOR TO BE VERIFIED BY BUILDING DESIGNER

BEARINGS

JT	FACTORED GROSS REACTION VERT	HORZ	MAXIMUM FACTORED GROSS REACTION DOWN	HORZ	UPLIFT	INPUT BRG IN-SX	REQRD BRG IN-SX
B	384	0	384	0	0	4-0	1-8
F	89	0	89	0	0	5-8	1-8
C	256	0	256	0	0	5-8	5-8

BEVELED PLATE OR SHIM REQUIRED TO PROVIDE FULL BEARING SURFACE WITH TRUSS CHORD AT JT(S): C

UNFACTORED REACTIONS

JT	1ST LCASE COMBINED	MAX./MIN. COMPONENT REACTIONS SNOW	LIVE	PERM.LIVE	WIND	DEAD	SOIL
B	270	184 / 0	0 / 0	0 / 0	0 / 0	86 / 0	0 / 0
F	67	19 / 0	0 / 0	0 / 0	0 / 0	48 / 0	0 / 0
C	178	137 / 0	0 / 0	0 / 0	0 / 0	41 / 0	0 / 0

BEARING MATERIAL TO BE SPF NO.2 OR BETTER AT JOINT(S) B, F, C

BRACING
TOP CHORD TO BE SHEATHED OR MAX. PURLIN SPACING = 6.25 FT.
MAX. UNBRACED BOTTOM CHORD LENGTH = 10.00 FT OR RIGID CEILING DIRECTLY APPLIED.

ALL PITCH BREAKS AND PERIMETER CORNER JOINTS MUST BE LATERALLY RESTRAINED.

LOADING
TOTAL LOAD CASES: (4)

CHORDS

MEMB. FR-TO	MAX. FACTORED FORCE (LBS)	FACTORED VERT. LOAD LC1 (PLF) FROM	TO	MAX CSI (LC)	MAX. UNBRAC LENGTH
A- B	0 / 16	-84.9	-84.9	0.11 (1)	10.00
B- H	-19 / 12	-84.9	-84.9	0.06 (4)	6.25
H- C	-1 / 2	-84.9	-84.9	0.30 (1)	10.00
C- D	-10 / 0	-84.9	-84.9	0.03 (1)	10.00
B- G	0 / 0	-18.5	-18.5	0.21 (1)	10.00
G- F	0 / 0	-18.5	-18.5	0.21 (1)	10.00
F- E	0 / 0	-18.5	-18.5	0.01 (4)	10.00

WEBS

MEMB. FR-TO	MAX. FACTORED FORCE (LBS)	MAX CSI (LC)
G- H	-257 / 11	0.00 (1)

[M]

DESIGN CRITERIA

SPECIFIED LOADS:

TOP CH.	LL =	23.3	PSF
	DL =	6.0	PSF
BOT CH.	LL =	0.0	PSF
	DL =	7.4	PSF
TOTAL LOAD	=	36.7	PSF

SPACING = 24.0 IN. C/C

THIS TRUSS IS DESIGNED FOR RESIDENTIAL OR SMALL BUILDING REQUIREMENTS OF PART 9, NBCC 2010

THIS DESIGN COMPLIES WITH:
- PART 9 OF OBC 2012 , BCBC 2012 , ABC 2014
- CSA 086-09
- TPIC 2011

(55 % OF 27.2 P.S.F. G.S.L. PLUS 8.4 P.S.F. RAIN LOAD) EQUALS 23.3 P.S.F. SPECIFIED ROOF LIVE LOAD

ALLOWABLE DEFL.(LL)= L/360 (0.19")
CALCULATED VERT. DEFL.(LL) = L/ 999 (0.04")
ALLOWABLE DEFL.(TL)= L/360 (0.19")
CALCULATED VERT. DEFL.(TL) = L/ 736 (0.09")

CANTILEVER DEFLECTION:
ALLOWABLE DEFL.(TL)= L/120 (0.19")
CALCULATED VERT. DEFL.(TL) = L/ 999 (0.00")

CSI: TC=0.30/1.00 (C-H:1) , BC=0.21/1.00 (F-G:1) , WB=0.00/1.00 (G-H:1) , SSI=0.22/1.00 (B-G:1)

DOL LUMBER=1.00 NAIL=1.00 LS BEND=1.10 COMP=1.10 SHEAR=1.10 TENS= 1.10

COMPANION LIVE LOAD FACTOR = 0.50

TRUSS PLATE MANUFACTURER IS NOT RESPONSIBLE FOR QUALITY CONTROL IN THE TRUSS MANUFACTURING PLANT .

NAIL VALUES

PLATE	GRIP(DRY) (PSI) MAX	MIN	SHEAR (PLI) MAX	MIN	SECTION (PLI) MAX	MIN
MT20	618	354	1667	788	1987	1656

PLATE PLACEMENT TOL. = 0.250 inches

PLATE ROTATION TOL. = 5.0 Deg.

JSI GRIP= 0.25 (B) (INPUT = 0.90)
JSI METAL= 0.07 (B) (INPUT = 1.00)

JOB NAME	TRUSS NAME	QUANTITY	PLY	JOB DESC.	DRWG NO.
313991	H19		1	TRUSS DESC. JT-39002	E-19112511

Alpa Roof Truss, Maple

Version 8.300 S Aug 9 2019 MiTek Industries, Inc. Fri Nov 8 13:09:24 2019 Page 1

ID:VRLqmclDiflZCj2mk6F92VyQuye-mV6uL?oANPgQ9Y_ICnK8vYhVO?M1nn5K0MlaXRyLFIf

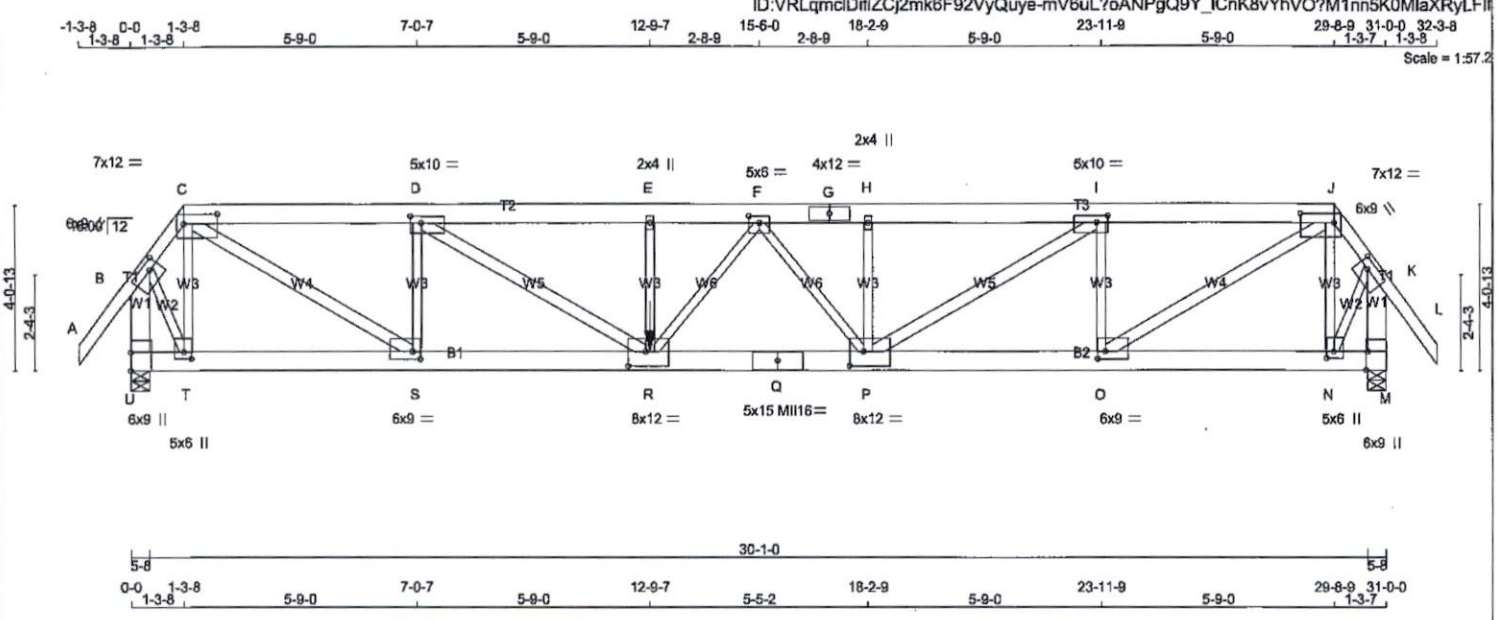

TOTAL WEIGHT = 179 lb

LUMBER

N. L. G. A. RULES

CHORDS	SIZE		LUMBER	DESCR.
A - C	2x4	DRY	No.2	SPF
C - G	2x6	DRY	1650F 1.5E	SPF
G - J	2x6	DRY	1650F 1.5E	SPF
J - L	2x4	DRY	No.2	SPF
U - B	2x6	DRY	No.2	SPF
M - K	2x6	DRY	No.2	SPF
U - Q	2x6	DRY	2100F 1.8E	SPF
Q - M	2x6	DRY	2100F 1.8E	SPF
ALL WEBS	2x3	DRY	No.2	SPF
EXCEPT				
C - S	2x4	DRY	1650F 1.5E	SPF
D - R	2x4	DRY	No.2	SPF
P - I	2x4	DRY	No.2	SPF
O - J	2x4	DRY	1650F 1.5E	SPF

DRY: SEASONED LUMBER.

PLATES (table is in inches)

JT	TYPE	PLATES	W	LEN	Y	X
B	TMVW-t	MT20	6.0	9.0	2.25	3.00
C	TTWW-l	MT20	7.0	12.0	2.75	10.00
D	TMWW-t	MT20	5.0	10.0	2.00	3.25
E	TMW+w	MT20	2.0	4.0		
F	TMWW-t	MT20	5.0	6.0	2.00	3.00
G	TS-t	MT20	4.0	12.0		
H	TMW+w	MT20	2.0	4.0		
I	TMWW-t	MT20	5.0	10.0	2.00	3.25
J	TTWW-l	MT20	7.0	12.0	2.75	10.00
K	TMVW-t	MT20	6.0	9.0	2.25	3.00
M	BMV1+t	MT20	6.0	9.0	Edge	0.50
N	BMWW+t	MT20	5.0	6.0	2.00	2.25
O	BMWW-t	MT20	6.0	9.0	2.25	2.25
P	BMWWW-t	MT20	8.0	12.0	4.25	4.25
Q	BS-t	MII16	5.0	15.0		
R	BMWWW-t	MT20	8.0	12.0	4.25	5.25
S	BMWW-t	MT20	6.0	9.0	2.25	2.25
T	BMWW+t	MT20	5.0	6.0	2.00	2.25
U	BMV1+t	MT20	6.0	9.0	5.50	

Edge - INDICATES REFERENCE CORNER OF PLATE TOUCHES EDGE OF CHORD.

NOTE: Lateral brace(s) shown shall be 2x4 SPF #2

LICENSED PROFESSIONAL ENGINEER
11/08/2019
R. TURENNE
100157048
PROVINCE OF ONTARIO

DIMENSIONS, SUPPORTS AND LOADINGS SPECIFIED BY FABRICATOR TO BE VERIFIED BY BUILDING DESIGNER

BEARINGS

JT	FACTORED GROSS REACTION VERT	HORZ	MAXIMUM FACTORED GROSS REACTION DOWN	HORZ	UPLIFT	INPUT BRG IN-SX	REQRD BRG IN-SX
U	4266	0	4266	0	0	5-8	5-8
M	3508	0	3508	0	0	5-8	3-13

UNFACTORED REACTIONS

1ST LCASE MAX./MIN. COMPONENT REACTIONS

JT	COMBINED	SNOW	LIVE	PERM.LIVE	WIND	DEAD	SOIL
U	3026	1934 / 0	0 / 0	0 / 0	0 / 0	1092 / 0	0 / 0
M	2488	1592 / 0	0 / 0	0 / 0	0 / 0	895 / 0	0 / 0

BEARING MATERIAL TO BE SPF NO.2 OR BETTER AT JOINT(S) U, M

BEARING SIZE FACTOR = 1.15 AT JNT(S) U, M (BASED ON SUPPORT DEPTH = 1-8)

BRACING

TOP CHORD TO BE SHEATHED OR MAX. PURLIN SPACING = 2.55 FT.

MAX. UNBRACED BOTTOM CHORD LENGTH = 10.00 FT OR RIGID CEILING DIRECTLY APPLIED.

ALL PITCH BREAKS AND PERIMETER CORNER JOINTS MUST BE LATERALLY RESTRAINED.

LOADING

TOTAL LOAD CASES: (4)

CHORDS

MEMB. FR-TO	MAX. FACTORED FORCE (LBS)	FACTORED VERT. LOAD (PLF) FROM	TO	LC1 CSI (LC)	MAX UNBRAC LENGTH
A- B	0 / 48	-84.9	-84.9	0.13 (1)	10.00
B- C	-2536 / 0	-84.9	-84.9	0.21 (1)	4.03
C- D	-7420 / 0	-84.9	-84.9	0.32 (1)	3.55
D- E	-12180 / 0	-84.9	-84.9	0.67 (1)	2.55
E- F	-12180 / 0	-84.9	-84.9	0.51 (1)	2.64
F- G	-9622 / 0	-84.9	-84.9	0.29 (1)	3.17
G- H	-9622 / 0	-84.9	-84.9	0.29 (1)	3.17
H- I	-9622 / 0	-84.9	-84.9	0.42 (1)	3.08
I- J	-5925 / 0	-84.9	-84.9	0.24 (1)	3.97
J- K	-2158 / 0	-84.9	-84.9	0.19 (1)	4.43
K- L	0 / 48	-84.9	-84.9	0.13 (1)	10.00
U- B	-4392 / 0	0.0	0.0	0.39 (1)	5.09
M- K	-3623 / 0	0.0	0.0	0.32 (1)	5.56
U- T	0 / 0	-18.5	-18.5	0.08 (1)	10.00
T- S	0 / 1493	-18.5	-18.5	0.16 (1)	10.00
S- R	0 / 7420	-18.5	-18.5	0.52 (1)	10.00
R- Q	0 / 11013	-18.5	-18.5	0.71 (1)	10.00
Q- P	0 / 11013	-18.5	-18.5	0.71 (1)	10.00
P- O	0 / 5925	-18.5	-18.5	0.36 (1)	10.00
O- N	0 / 1218	-18.5	-18.5	0.14 (1)	10.00
N- M	0 / 0	-18.5	-18.5	0.07 (1)	10.00

WEBS

MEMB. FR-TO	MAX. FACTORED FORCE (LBS)	MAX CSI (LC)
T- C	-1841 / 0	0.44 (1)
C- S	0 / 6995	0.90 (1)
S- D	-3594 / 0	0.85 (1)
D- R	0 / 5620	0.99 (1)
R- E	-207 / 0	0.05 (1)
R- F	0 / 1942	0.48 (1)
F- P	-2315 / 0	0.78 (1)
P- H	-321 / 0	0.08 (1)
P- I	0 / 4366	0.77 (1)
O- I	-2885 / 0	0.68 (1)
O- J	0 / 5555	0.71 (1)
N- J	-1463 / 0	0.35 (1)
B- T	0 / 2594	0.64 (1)
N- K	0 / 2114	0.52 (1)

FACTORED CONCENTRATED LOADS (LBS)

JT	LOC.	LC1	MAX-	MAX+	FACE	DIR.	TYPE	HEEL	CONN.
R	12-9-7	-4330	-4330	—	FRONT	VERT	TOTAL	—	C1

CONNECTION REQUIREMENTS

1) **C1:** A SUITABLE HANGER/MECHANICAL CONNECTION IS REQUIRED.

DESIGN CRITERIA

*** SPECIAL LOADS ANALYSIS ***
GEOMETRY AND/OR BASIC LOADS CHANGED BY USER.
LOADS WERE DERIVED FROM USER INPUT
NO FURTHER MODIFICATIONS WERE MADE

SPECIFIED LOADS:

TOP CH.	LL	=	23.3	PSF
	DL	=	6.0	PSF
BOT CH.	LL	=	0.0	PSF
	DL	=	7.4	PSF
TOTAL LOAD		=	36.7	PSF

SPACING = 24.0 IN. C/C

LOADING IN FLAT SECTION BASED ON A SLOPE OF 2.00/12 MINIMUM

*** NON STANDARD GIRDER ***
ADDTL USER-DEFINED LOADS APPLIED TO ALL LOAD CASES.

THIS TRUSS IS DESIGNED FOR RESIDENTIAL OR SMALL BUILDING REQUIREMENTS OF PART 9, NBCC 2010

THIS DESIGN COMPLIES WITH:
- PART 9 OF OBC 2012 , BCBC 2012 , ABC 2014
- CSA 086-09
- TPIC 2011

DESIGN ASSUMPTIONS
-OVERHANG NOT TO BE ALTERED OR CUT OFF.

(55 % OF 27.2 P.S.F. G.S.L. PLUS 8.4 P.S.F. RAIN LOAD) EQUALS 23.3 P.S.F. SPECIFIED ROOF LIVE LOAD

ALLOWABLE DEFL.(LL)= L/360 (1.03")
CALCULATED VERT. DEFL.(LL) = L/ 943 (0.39")
ALLOWABLE DEFL.(TL)= L/360 (1.03")
CALCULATED VERT. DEFL.(TL) = L/ 494 (0.75")

CSI: TC=0.67/1.00 (D-E:1) , BC=0.71/1.00 (P-R:1) , WB=0.99/1.00 (D-R:1) , SSI=0.22/1.00 (D-E:1)

DOL LUMBER=1.00 NAIL=1.00 LS BEND=1.00 COMP=1.00 SHEAR=1.00 TENS= 1.00

COMPANION LIVE LOAD FACTOR = 0.50

AUTOSOLVE HEELS OFF

TRUSS PLATE MANUFACTURER IS NOT RESPONSIBLE FOR QUALITY CONTROL IN THE TRUSS MANUFACTURING PLANT .

NAIL VALUES

PLATE	GRIP(DRY) (PSI) MAX	MIN	SHEAR (PLI) MAX	MIN	SECTION (PLI) MAX	MIN
MT20	618	354	1667	788	1987	1656
MII16	438	276	2341	1245	4283	1656

CONTINUED ON PAGE 2

JOB NAME	TRUSS NAME	QUANTITY	PLY	JOB DESC.	DRWG NO.
313991	H21		1	TRUSS DESC. JT-39002	E-19112512

Alpa Roof Truss, Maple

Version 8.300 S Aug 9 2019 MiTek Industries, Inc. Fri Nov 8 13:09:48 2019 Page 1
ID:VRLqmclDiflZCj2mk6F92VyQuye-36ZzNC4Ejnh01EpMcqlmtchhegb9PmTsX56rN2yLFIH

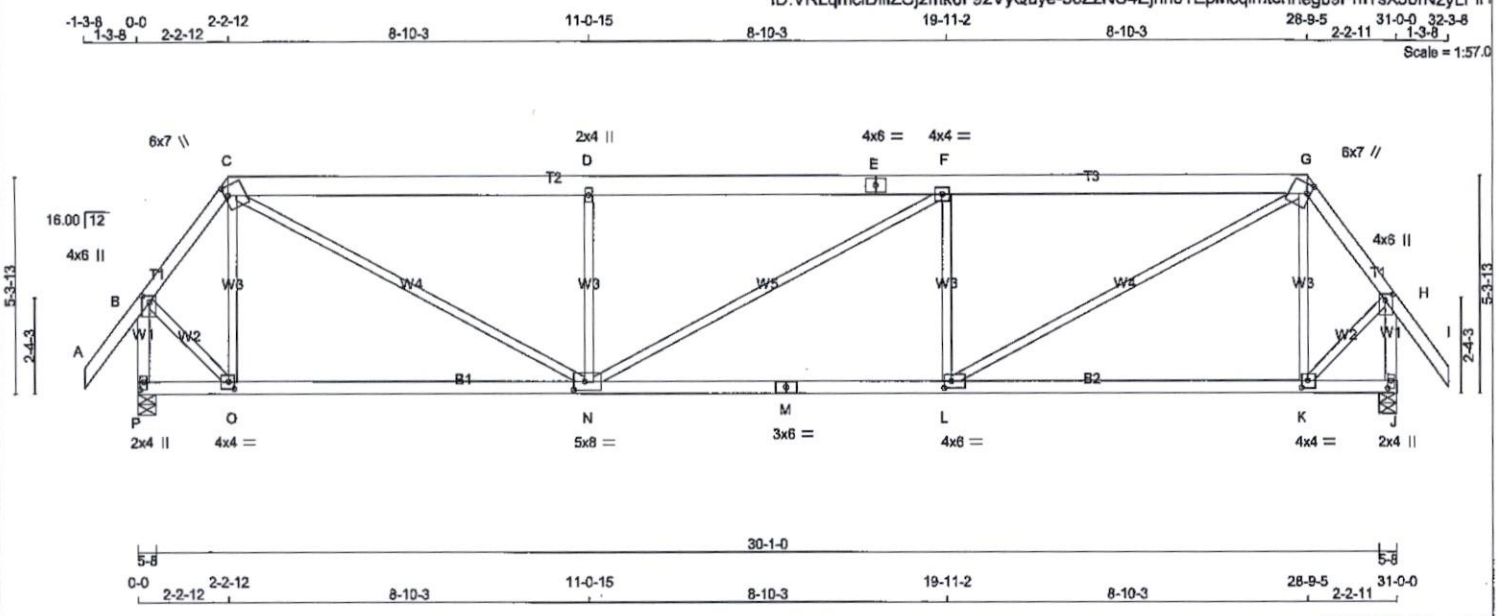

TOTAL WEIGHT = 145 lb

LUMBER
N. L. G. A. RULES

CHORDS	SIZE		LUMBER	DESCR.
A - C	2x4	DRY	No.2	SPF
C - E	2x6	DRY	1650F 1.5E	SPF
E - G	2x6	DRY	1650F 1.5E	SPF
G - I	2x4	DRY	No.2	SPF
P - B	2x4	DRY	No.2	SPF
J - H	2x4	DRY	No.2	SPF
P - M	2x4	DRY	No.2	SPF
M - J	2x4	DRY	No.2	SPF
ALL WEBS EXCEPT	2x3	DRY	No.2	SPF

DRY: SEASONED LUMBER.

PLATES (table is in inches)

JT	TYPE	PLATES	W	LEN	Y	X
B	TMVW+p	MT20	4.0	6.0	1.75	2.25
C	TTWW+m	MT20	6.0	7.0	2.75	1.00
D	TMW+w	MT20	2.0	4.0		
E	TS-t	MT20	4.0	6.0		
F	TMWW-t	MT20	4.0	4.0		
G	TTWW+m	MT20	6.0	7.0	2.75	1.00
H	TMVW+p	MT20	4.0	6.0	1.75	2.25
J	BMV1+p	MT20	2.0	4.0	2.25	1.00
K	BMWW-t	MT20	4.0	4.0	2.00	1.75
L	BMWW-t	MT20	4.0	6.0	2.00	2.00
M	BS-t	MT20	3.0	6.0		
N	BMWWW-t	MT20	5.0	8.0	2.50	3.25
O	BMWW-t	MT20	4.0	4.0	2.00	1.75
P	BMV1+p	MT20	2.0	4.0	2.25	1.00

NOTE: Lateral brace(s) shown shall be 2x4 SPF #2

LICENSED PROFESSIONAL ENGINEER
11/08/2019
R. TURENNE
100157040
PROVINCE OF ONTARIO

DIMENSIONS, SUPPORTS AND LOADINGS SPECIFIED BY FABRICATOR TO BE VERIFIED BY BUILDING DESIGNER

BEARINGS

JT	FACTORED GROSS REACTION VERT	HORZ	MAXIMUM FACTORED GROSS REACTION DOWN	HORZ	UPLIFT	INPUT BRG IN-SX	REQRD BRG IN-SX
P	1722	0	1722	0	0	5-8	2-9
J	1722	0	1722	0	0	5-8	2-9

UNFACTORED REACTIONS

JT	1ST LCASE COMBINED	MAX./MIN. COMPONENT REACTIONS SNOW	LIVE	PERM.LIVE	WIND	DEAD	SOIL
P	1220	787 / 0	0 / 0	0 / 0	0 / 0	432 / 0	0 / 0
J	1220	787 / 0	0 / 0	0 / 0	0 / 0	432 / 0	0 / 0

BEARING MATERIAL TO BE SPF NO.2 OR BETTER AT JOINT(S) P, J

BRACING
TOP CHORD TO BE SHEATHED OR MAX. PURLIN SPACING = 5.51 FT.
MAX. UNBRACED BOTTOM CHORD LENGTH = 10.00 FT OR RIGID CEILING DIRECTLY APPLIED.

ALL PITCH BREAKS AND PERIMETER CORNER JOINTS MUST BE LATERALLY RESTRAINED.

LOADING
TOTAL LOAD CASES: (4)

CHORDS

MEMB. FR-TO	MAX. FACTORED FORCE (LBS)	FACTORED VERT. LOAD LC1 (PLF) FROM	TO	MAX CSI (LC)	MAX. UNBRAC LENGTH
A- B	0 / 48	-84.9	-84.9	0.12 (1)	10.00
B- C	-1173 / 0	-84.9	-84.9	0.09 (1)	5.80
C- D	-2453 / 0	-84.9	-84.9	0.33 (1)	5.51
D- E	-2453 / 0	-84.9	-84.9	0.33 (1)	5.51
E- F	-2453 / 0	-84.9	-84.9	0.33 (1)	5.51
F- G	-2453 / 0	-84.9	-84.9	0.32 (1)	5.52
G- H	-1174 / 0	-84.9	-84.9	0.09 (1)	5.80
H- I	0 / 48	-84.9	-84.9	0.12 (1)	10.00
P- B	-1745 / 0	0.0	0.0	0.22 (1)	6.31
J- H	-1745 / 0	0.0	0.0	0.22 (1)	6.31
P- O	0 / 0	-18.5	-18.5	0.22 (4)	10.00
O- N	0 / 694	-18.5	-18.5	0.35 (4)	10.00
N- M	0 / 2453	-18.5	-18.5	0.54 (1)	10.00
M- L	0 / 2453	-18.5	-18.5	0.54 (1)	10.00
L- K	0 / 694	-18.5	-18.5	0.35 (4)	10.00
K- J	0 / 0	-18.5	-18.5	0.23 (4)	10.00

WEBS

MEMB. FR-TO	MAX. FACTORED FORCE (LBS)	MAX CSI (LC)
O- C	-445 / 0	0.17 (1)
C- N	0 / 2015	0.45 (1)
N- D	-819 / 0	0.32 (1)
N- F	0 / 1	0.00 (1)
L- F	-818 / 0	0.32 (1)
L- G	0 / 2014	0.46 (1)
K- G	-445 / 0	0.17 (1)
B- O	0 / 919	0.21 (1)
K- H	0 / 919	0.21 (1)

DESIGN CRITERIA

SPECIFIED LOADS:

TOP CH.	LL	=	23.3	PSF
	DL	=	6.0	PSF
BOT CH.	LL	=	0.0	PSF
	DL	=	7.4	PSF
TOTAL LOAD		=	36.7	PSF

SPACING = 24.0 IN. C/C

LOADING IN FLAT SECTION BASED ON A SLOPE OF 2.00/12 MINIMUM

THIS TRUSS IS DESIGNED FOR RESIDENTIAL OR SMALL BUILDING REQUIREMENTS OF PART 9, NBCC 2010

THIS DESIGN COMPLIES WITH:
- PART 9 OF OBC 2012 , BCBC 2012 , ABC 2014
- CSA 086-09
- TPIC 2011

(55 % OF 27.2 P.S.F. G.S.L. PLUS 8.4 P.S.F. RAIN LOAD) EQUALS 23.3 P.S.F. SPECIFIED ROOF LIVE LOAD

ALLOWABLE DEFL.(LL)= L/360 (1.03")
CALCULATED VERT. DEFL.(LL) = L/ 999 (0.12")
ALLOWABLE DEFL.(TL)= L/360 (1.03")
CALCULATED VERT. DEFL.(TL) = L/ 999 (0.28")

CSI: TC=0.33/1.00 (D-F:1) , BC=0.54/1.00 (L-N:1) , WB=0.45/1.00 (C-N:1) , SSI=0.27/1.00 (C-D:1)

DOL LUMBER=1.00 NAIL=1.00 LS BEND=1.10 COMP=1.10 SHEAR=1.10 TENS= 1.10

COMPANION LIVE LOAD FACTOR = 0.50

TRUSS PLATE MANUFACTURER IS NOT RESPONSIBLE FOR QUALITY CONTROL IN THE TRUSS MANUFACTURING PLANT .

NAIL VALUES

PLATE	GRIP(DRY) (PSI) MAX	MIN	SHEAR (PLI) MAX	MIN	SECTION (PLI) MAX	MIN
MT20	618	354	1667	788	1987	1656

PLATE PLACEMENT TOL. = 0.250 inches

PLATE ROTATION TOL. = 5.0 Deg.

JSI GRIP= 0.89 (N) (INPUT = 0.90)
JSI METAL= 0.87 (M) (INPUT = 1.00)

JOB NAME	TRUSS NAME	QUANTITY	PLY	JOB DESC.	DRWG NO.
313991	H21A		1	TRUSS DESC. JT-39002	E-19112513

Alpa Roof Truss, Maple

Version 8.300 S Aug 9 2019 MiTek Industries, Inc. Fri Nov 8 12:52:17 2019 Page 1
ID:VRLqmcIDiflZCj2mk6F92VyQuye-LwZeoqMzEsH8RjzMYbPInzfzB0omfNOAs40j_TyLFY

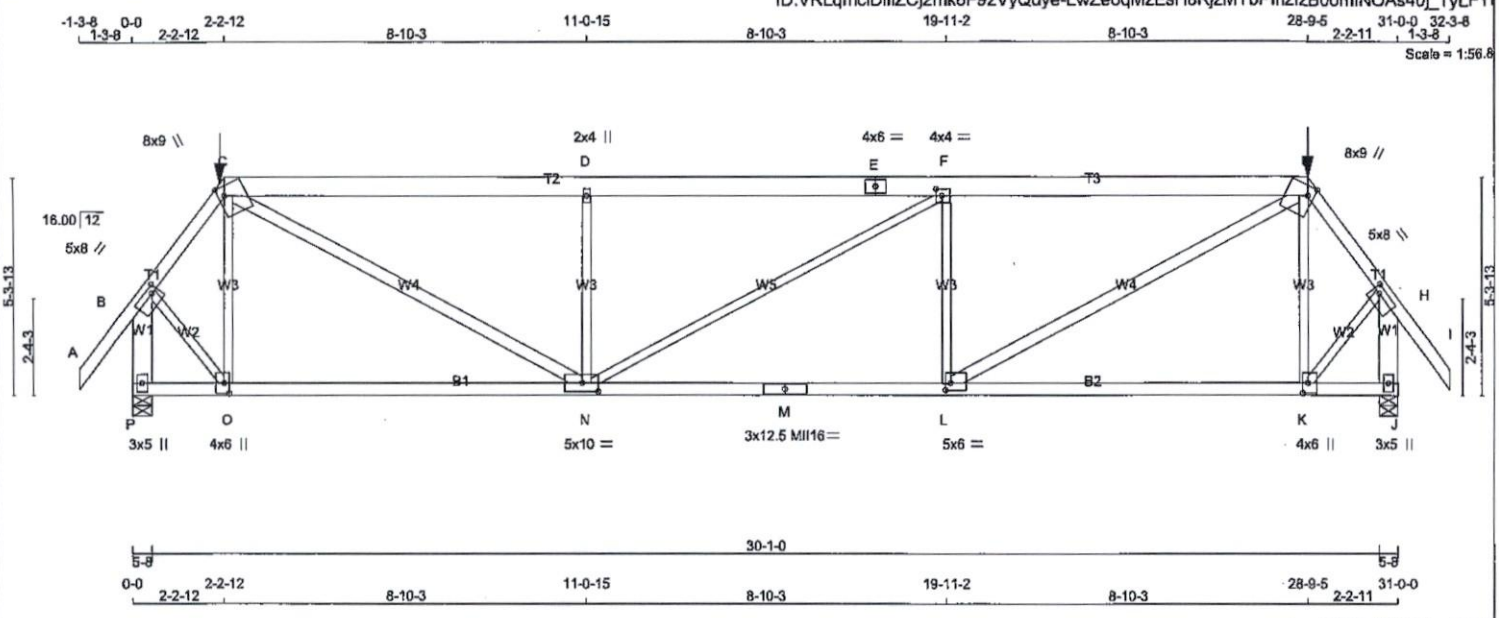

TOTAL WEIGHT = 155 lb [M]

LUMBER

N. L. G. A. RULES

CHORDS	SIZE		LUMBER	DESCR.
A - C	2x4	DRY	No.2	SPF
C - E	2x6	DRY	1650F 1.5E	SPF
E - G	2x6	DRY	1650F 1.5E	SPF
G - I	2x4	DRY	No.2	SPF
P - B	2x6	DRY	No.2	SPF
J - H	2x6	DRY	No.2	SPF
P - M	2x4	DRY	1650F 1.5E	SPF
M - J	2x4	DRY	1650F 1.5E	SPF
ALL WEBS	2x3	DRY	No.2	SPF
EXCEPT				
C - N	2x4	DRY	No.2	SPF
L - G	2x4	DRY	No.2	SPF

DRY: SEASONED LUMBER.

PLATES (table is in inches)

JT	TYPE	PLATES	W	LEN	Y	X
B	TMVW-t	MT20	5.0	8.0	1.75	2.00
C	TTWW+m	MT20	8.0	9.0	2.75	1.75
D	TMW+w	MT20	2.0	4.0		
E	TS-t	MT20	4.0	6.0		
F	TMWW-t	MT20	4.0	4.0	2.00	1.75
G	TTWW+m	MT20	8.0	9.0	2.75	1.75
H	TMVW-t	MT20	5.0	8.0	1.75	2.00
J	BMV1+p	MT20	3.0	5.0		
K	BMWW+t	MT20	4.0	6.0	3.00	1.50
L	BMWW-t	MT20	5.0	6.0	2.00	1.50
M	BS-t	MII16	3.0	12.5		
N	BMWWW-t	MT20	5.0	10.0	2.50	4.75
O	BMWW+t	MT20	4.0	6.0	3.00	1.50
P	BMV1+p	MT20	3.0	5.0		

NOTE: Lateral brace(s) shown shall be 2x4 SPF #2

LICENSED PROFESSIONAL ENGINEER
11/08/2019
R. TURENNE
100157040
PROVINCE OF ONTARIO

DIMENSIONS, SUPPORTS AND LOADINGS SPECIFIED BY FABRICATOR TO BE VERIFIED BY BUILDING DESIGNER

BEARINGS

JT	FACTORED GROSS REACTION VERT	HORZ	MAXIMUM FACTORED GROSS REACTION DOWN	HORZ	UPLIFT	INPUT BRG IN-SX	REQRD BRG IN-SX
P	3229	0	3229	0	0	5-8	5-0
J	3228	0	3228	0	0	5-8	5-0

UNFACTORED REACTIONS

1ST LCASE — MAX./MIN. COMPONENT REACTIONS

JT	COMBINED	SNOW	LIVE	PERM.LIVE	WIND	DEAD	SOIL
P	2290	1462 / 0	0 / 0	0 / 0	0 / 0	828 / 0	0 / 0
J	2290	1462 / 0	0 / 0	0 / 0	0 / 0	828 / 0	0 / 0

BEARING MATERIAL TO BE SPF NO.2 OR BETTER AT JOINT(S) P, J

BRACING

TOP CHORD TO BE SHEATHED OR MAX. PURLIN SPACING = 3.53 FT.
MAX. UNBRACED BOTTOM CHORD LENGTH = 10.00 FT OR RIGID CEILING DIRECTLY APPLIED.

ALL PITCH BREAKS AND PERIMETER CORNER JOINTS MUST BE LATERALLY RESTRAINED.

LOADING

TOTAL LOAD CASES: (4)

CHORDS

MEMB. FR-TO	MAX. FACTORED FORCE (LBS)	FACTORED VERT. LOAD LC1 (PLF) FROM	TO	MAX CSI (LC)	MAX. UNBRAC LENGTH
A- B	0 / 48	-84.9	-84.9	0.13 (1)	10.00
B- C	-2344 / 0	-84.9	-84.9	0.16 (1)	4.32
C- D	-4854 / 0	-167.1	-167.1	0.82 (1)	3.53
D- E	-4855 / 0	-167.1	-167.1	0.82 (1)	3.53
E- F	-4855 / 0	-167.1	-167.1	0.82 (1)	3.53
F- G	-4854 / 0	-167.1	-167.1	0.82 (1)	3.54
G- H	-2344 / 0	-84.9	-84.9	0.16 (1)	4.32
H- I	0 / 48	-84.9	-84.9	0.13 (1)	10.00
P- B	-3272 / 0	0.0	0.0	0.31 (1)	5.81
J- H	-3271 / 0	0.0	0.0	0.31 (1)	5.81
P- O	0 / 0	-36.4	-36.4	0.40 (4)	10.00
O- N	0 / 1385	-36.4	-36.4	0.62 (4)	10.00
N- M	0 / 4854	-36.4	-36.4	0.90 (1)	10.00
M- L	0 / 4854	-36.4	-36.4	0.90 (1)	10.00
L- K	0 / 1385	-36.4	-36.4	0.62 (4)	10.00
K- J	0 / 0	-36.4	-36.4	0.41 (4)	10.00

WEBS

MEMB. FR-TO	MAX. FACTORED FORCE (LBS)	MAX CSI (LC)
O- C	-896 / 0	0.36 (1)
C- N	0 / 3972	0.70 (1)
N- D	-1613 / 0	0.65 (1)
N- F	0 / 1	0.00 (4)
L- F	-1612 / 0	0.65 (1)
L- G	0 / 3972	0.70 (1)
K- G	-896 / 0	0.36 (1)
B- O	0 / 1835	0.45 (1)
K- H	0 / 1835	0.45 (1)

FACTORED CONCENTRATED LOADS (LBS)

JT	LOC.	LC1	MAX-	MAX+	FACE	DIR.	TYPE	HEEL	CONN.
C	2-2-12	-138	-138	—	FRONT	VERT	TOTAL	—	C1
G	28-9-5	-138	-138	—	FRONT	VERT	TOTAL	—	C1

CONNECTION REQUIREMENTS

1) C1: A SUITABLE HANGER/MECHANICAL CONNECTION IS REQUIRED.

DESIGN CRITERIA

SPECIFIED LOADS:

TOP CH.	LL =	23.3	PSF
	DL =	6.0	PSF
BOT CH.	LL =	0.0	PSF
	DL =	7.4	PSF
TOTAL LOAD	=	36.7	PSF

SPACING = 24.0 IN. C/C

LOADING IN FLAT SECTION BASED ON A SLOPE OF 2.00/12 MINIMUM

GIRDER TYPE: CPrimeHip
LEFT SETBACK = 2-2-12
RIGHT SETBACK = 2-2-11
END SETBACK = 5-10-8
END WALL WIDTH = 0-0
CORNER FRAMING TYPE: CONVENTIONAL
END JACK TYPE: CONVENTIONAL
APPLIED TO FRONT SIDE
- ADDTL LOADS BASED ON 55 % OF GSL.

THIS TRUSS IS DESIGNED FOR RESIDENTIAL OR SMALL BUILDING REQUIREMENTS OF PART 9, NBCC 2010

THIS DESIGN COMPLIES WITH:
- PART 9 OF OBC 2012 , BCBC 2012 , ABC 2014
- CSA 086-09
- TPIC 2011

(55 % OF 27.2 P.S.F. G.S.L. PLUS 8.4 P.S.F. RAIN LOAD) EQUALS 23.3 P.S.F. SPECIFIED ROOF LIVE LOAD

ALLOWABLE DEFL.(LL)= L/360 (1.03")
CALCULATED VERT. DEFL.(LL) = L/ 999 (0.20")
ALLOWABLE DEFL.(TL)= L/360 (1.03")
CALCULATED VERT. DEFL.(TL) = L/ 792 (0.47")

CSI: TC=0.82/1.00 (D-F:1) , BC=0.90/1.00 (L-N:1) , WB=0.70/1.00 (C-N:1) , SSI=0.58/1.00 (C-D:1)

DOL LUMBER=1.00 NAIL=1.00 LS BEND=1.00 COMP=1.00 SHEAR=1.00 TENS= 1.00

COMPANION LIVE LOAD FACTOR = 0.50

AUTOSOLVE HEELS OFF

TRUSS PLATE MANUFACTURER IS NOT RESPONSIBLE FOR QUALITY CONTROL IN THE TRUSS MANUFACTURING PLANT .

NAIL VALUES

PLATE	GRIP(DRY) (PSI) MAX	MIN	SHEAR (PLI) MAX	MIN	SECTION (PLI) MAX	MIN
MT20	618	354	1667	788	1987	1656
MII16	438	276	2341	1245	4283	1656

PLATE PLACEMENT TOL. = 0.250 inches

PLATE ROTATION TOL. = 5.0 Deg.

JSI GRIP= 0.89 (N) (INPUT = 0.90)
JSI METAL= 0.87 (L) (INPUT = 1.00)

JOB NAME	TRUSS NAME	QUANTITY	PLY	JOB DESC.	DRWG NO.
313991	H22		1	TRUSS DESC. JT-39002	E-19112514

Alpa Roof Truss, Maple

Version 8.300 S Aug 9 2019 MiTek Industries, Inc. Fri Nov 8 13:09:42 2019 Page 1
ID:VRLqmcIDifIZCj2mk6F92VyQuye-FyCi690T8xxtJJMCGZeMdLRX4FaM?1U_9AfXAPyLFIN

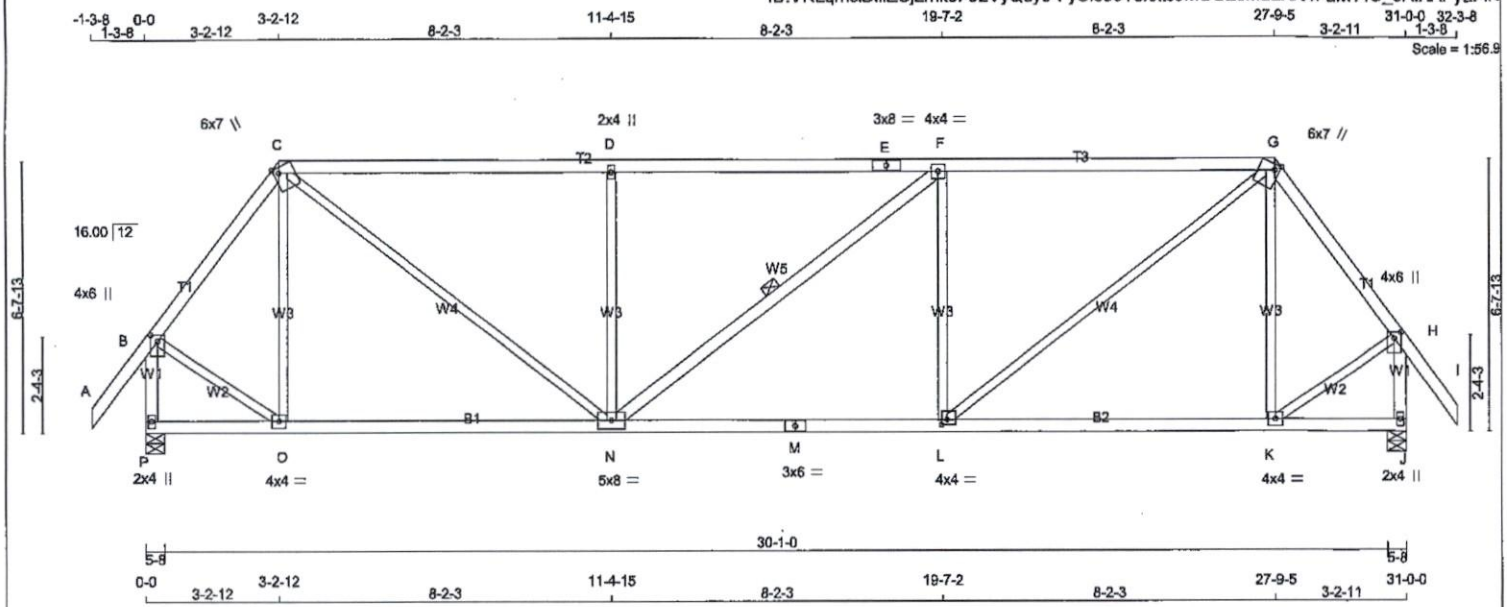

TOTAL WEIGHT = 2 X 139 = 278 lb

LUMBER
N. L. G. A. RULES

CHORDS	SIZE		LUMBER	DESCR.
A - C	2x4	DRY	No.2	SPF
C - E	2x4	DRY	1650F 1.5E	SPF
E - G	2x4	DRY	1650F 1.5E	SPF
G - I	2x4	DRY	No.2	SPF
P - B	2x4	DRY	No.2	SPF
J - H	2x4	DRY	No.2	SPF
P - M	2x4	DRY	No.2	SPF
M - J	2x4	DRY	No.2	SPF
ALL WEBS EXCEPT	2x3	DRY	No.2	SPF
N - F	2x4	DRY	No.2	SPF

DRY: SEASONED LUMBER.

PLATES (table is in inches)

JT	TYPE	PLATES	W	LEN	Y	X
B	TMVW+p	MT20	4.0	6.0	1.75	2.00
C	TTWW+m	MT20	6.0	7.0	Edge	1.50
D	TMW+w	MT20	2.0	4.0		
E	TS-t	MT20	3.0	8.0		
F	TMWW-t	MT20	4.0	4.0		
G	TTWW+m	MT20	6.0	7.0	Edge	1.50
H	TMVW+p	MT20	4.0	6.0	1.75	2.00
J	BMV1+p	MT20	2.0	4.0		
K	BMWW-t	MT20	4.0	4.0		
L	BMWW-t	MT20	4.0	4.0	1.50	1.50
M	BS-t	MT20	3.0	6.0		
N	BMWWW-t	MT20	5.0	8.0		
O	BMWW-t	MT20	4.0	4.0		
P	BMV1+p	MT20	2.0	4.0		

Edge - INDICATES REFERENCE CORNER OF PLATE TOUCHES EDGE OF CHORD.

NOTE: Lateral brace(s) shown shall be 2x4 SPF #2

LICENSED PROFESSIONAL ENGINEER
11/08/2019
R. TURENNE
100157040
PROVINCE OF ONTARIO

DIMENSIONS, SUPPORTS AND LOADINGS SPECIFIED BY FABRICATOR TO BE VERIFIED BY BUILDING DESIGNER

BEARINGS

JT	FACTORED GROSS REACTION VERT	HORZ	MAXIMUM FACTORED GROSS REACTION DOWN	HORZ	UPLIFT	INPUT BRG IN-SX	REQRD BRG IN-SX
P	1722	0	1722	0	0	5-8	2-9
J	1722	0	1722	0	0	5-8	2-9

UNFACTORED REACTIONS

JT	1ST LCASE COMBINED	MAX/MIN. COMPONENT REACTIONS SNOW	LIVE	PERM.LIVE	WIND	DEAD	SOIL
P	1220	787 / 0	0 / 0	0 / 0	0 / 0	432 / 0	0 / 0
J	1220	787 / 0	0 / 0	0 / 0	0 / 0	432 / 0	0 / 0

BEARING MATERIAL TO BE SPF NO.2 OR BETTER AT JOINT(S) P, J

BRACING
TOP CHORD TO BE SHEATHED OR MAX. PURLIN SPACING = 4.32 FT.
MAX. UNBRACED BOTTOM CHORD LENGTH = 10.00 FT OR RIGID CEILING DIRECTLY APPLIED.

ALL PITCH BREAKS AND PERIMETER CORNER JOINTS MUST BE LATERALLY RESTRAINED.

1 LATERAL BRACE(S) AT 1/ 2 LENGTH OF F-N.

END VERTICAL(S) MUST BE SHEATHED OR HAVE BRACES AS INDICATED IN THE MAX. UNBRACED LENGTH COLUMN OF THE TABLE BELOW

LOADING
TOTAL LOAD CASES: (4)

CHORDS

MEMB. FR-TO	MAX. FACTORED FORCE (LBS)	FACTORED VERT. LOAD (PLF) FROM	TO	LC1	MAX CSI (LC)	MAX. UNBRAC LENGTH
A- B	0 / 48	-84.9	-84.9	0.12 (1)	10.00	
B- C	-1265 / 0	-84.9	-84.9	0.19 (1)	5.53	
C- D	-1918 / 0	-84.9	-84.9	0.84 (1)	4.32	
D- E	-1919 / 0	-84.9	-84.9	0.84 (1)	4.32	
E- F	-1919 / 0	-84.9	-84.9	0.84 (1)	4.32	
F- G	-1919 / 0	-84.9	-84.9	0.84 (1)	4.32	
G- H	-1264 / 0	-84.9	-84.9	0.19 (1)	5.53	
H- I	0 / 48	-84.9	-84.9	0.12 (1)	10.00	
P- B	-1715 / 0	0.0	0.0	0.22 (1)	6.35	
J- H	-1715 / 0	0.0	0.0	0.22 (1)	6.35	
P- O	0 / 0	-18.5	-18.5	0.18 (4)	10.00	
O- N	0 / 748	-18.5	-18.5	0.31 (4)	10.00	
N- M	0 / 1920	-18.5	-18.5	0.44 (1)	10.00	
M- L	0 / 1920	-18.5	-18.5	0.44 (1)	10.00	
L- K	0 / 748	-18.5	-18.5	0.31 (4)	10.00	
K- J	0 / 0	-18.5	-18.5	0.18 (4)	10.00	

WEBS

MEMB. FR-TO	MAX. FACTORED FORCE (LBS)	MAX CSI (LC)
O- C	-315 / 0	0.23 (1)
C- N	0 / 1478	0.33 (1)
N- D	-751 / 0	0.55 (1)
N- F	-1 / 0	0.00 (1)
L- F	-751 / 0	0.55 (1)
L- G	0 / 1480	0.33 (1)
K- G	-315 / 0	0.23 (1)
B- O	0 / 874	0.20 (1)
K- H	0 / 874	0.20 (1)

DESIGN CRITERIA

SPECIFIED LOADS:

TOP CH.	LL =	23.3	PSF
	DL =	6.0	PSF
BOT CH.	LL =	0.0	PSF
	DL =	7.4	PSF
TOTAL LOAD	=	36.7	PSF

SPACING = 24.0 IN. C/C

LOADING IN FLAT SECTION BASED ON A SLOPE OF 2.00/12 MINIMUM

THIS TRUSS IS DESIGNED FOR RESIDENTIAL OR SMALL BUILDING REQUIREMENTS OF PART 9, NBCC 2010

THIS DESIGN COMPLIES WITH:
- PART 9 OF OBC 2012 , BCBC 2012 , ABC 2014
- CSA 086-09
- TPIC 2011

(55 % OF 27.2 P.S.F. G.S.L. PLUS 8.4 P.S.F. RAIN LOAD) EQUALS 23.3 P.S.F. SPECIFIED ROOF LIVE LOAD

ALLOWABLE DEFL.(LL)= L/360 (1.03")
CALCULATED VERT. DEFL.(LL) = L/ 999 (0.09")
ALLOWABLE DEFL.(TL)= L/360 (1.03")
CALCULATED VERT. DEFL.(TL) = L/ 999 (0.20")

CSI: TC=0.84/1.00 (F-G:1) , BC=0.44/1.00 (L-N:1) , WB=0.55/1.00 (F-L:1) , SSI=0.32/1.00 (F-G:1)

DOL LUMBER=1.00 NAIL=1.00 LS BEND=1.10 COMP=1.10 SHEAR=1.10 TENS= 1.10

COMPANION LIVE LOAD FACTOR = 0.50

TRUSS PLATE MANUFACTURER IS NOT RESPONSIBLE FOR QUALITY CONTROL IN THE TRUSS MANUFACTURING PLANT .

NAIL VALUES

PLATE	GRIP(DRY) (PSI) MAX	MIN	SHEAR (PLI) MAX	MIN	SECTION (PLI) MAX	MIN
MT20	618	354	1667	788	1987	1656

PLATE PLACEMENT TOL. = 0.250 inches

PLATE ROTATION TOL. = 5.0 Deg.

JSI GRIP= 0.90 (P) (INPUT = 0.90)
JSI METAL= 0.69 (M) (INPUT = 1.00)

JOB NAME	TRUSS NAME	QUANTITY	PLY	JOB DESC.	DRWG NO.
313991	H23		1	TRUSS DESC. JT-39002	E-19112515

Alpa Roof Truss, Mapla

Version 8.300 S Aug 9 2019 MiTek Industries, Inc. Fri Nov 8 13:09:54 2019 Page 1

ID:VRLqmclDiflZCj2mk6F92VyQuye-uGwEeF9_JdRAI9HWz4sA7txa?5hGpNylv1Z9biyLFIB

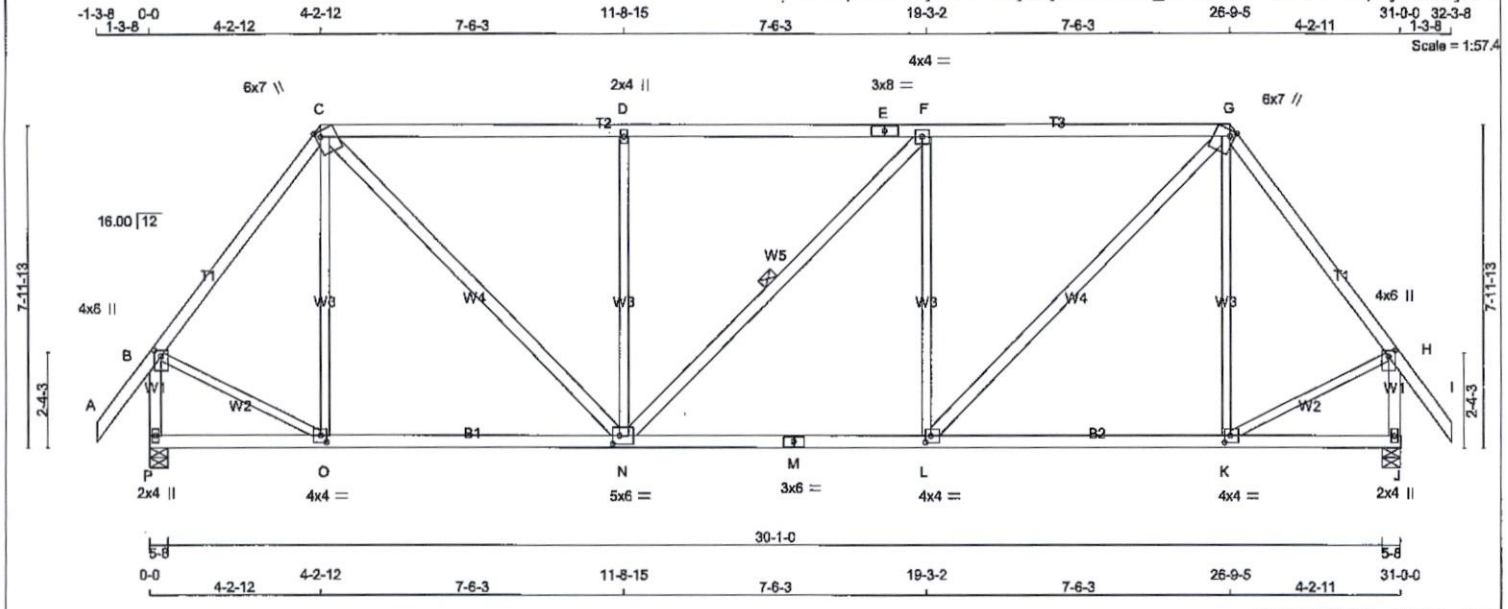

TOTAL WEIGHT = 2 X 154 = 308 lb

[M]

LUMBER

N. L. G. A. RULES

CHORDS	SIZE		LUMBER	DESCR.
A - C	2x4	DRY	No.2	SPF
C - E	2x4	DRY	No.2	SPF
E - G	2x4	DRY	No.2	SPF
G - I	2x4	DRY	No.2	SPF
P - B	2x4	DRY	No.2	SPF
J - H	2x4	DRY	No.2	SPF
P - M	2x4	DRY	No.2	SPF
M - J	2x4	DRY	No.2	SPF
ALL WEBS EXCEPT	2x3	DRY	No.2	SPF
C - N	2x4	DRY	No.2	SPF
N - F	2x4	DRY	No.2	SPF
L - G	2x4	DRY	No.2	SPF

DRY: SEASONED LUMBER.

PLATES (table is in inches)

JT	TYPE	PLATES	W	LEN	Y	X
B	TMVW+p	MT20	4.0	6.0	1.75	2.00
C	TTWW+m	MT20	6.0	7.0	Edge	1.50
D	TMW+w	MT20	2.0	4.0		
E	TS-t	MT20	3.0	8.0		
F	TMWW-t	MT20	4.0	4.0		
G	TTWW+m	MT20	6.0	7.0	Edge	1.50
H	TMVW+p	MT20	4.0	6.0	1.75	2.00
J	BMV1+p	MT20	2.0	4.0		
K	BMWW-t	MT20	4.0	4.0	2.00	1.75
L	BMWW-t	MT20	4.0	4.0	2.00	1.50
M	BS-t	MT20	3.0	6.0		
N	BMWWW-t	MT20	5.0	6.0	2.50	2.00
O	BMWW-t	MT20	4.0	4.0	2.00	1.75
P	BMV1+p	MT20	2.0	4.0		

Edge - INDICATES REFERENCE CORNER OF PLATE TOUCHES EDGE OF CHORD.

NOTE: Lateral brace(s) shown shall be 2x4 SPF #2

LICENSED PROFESSIONAL ENGINEER
11/08/2019
R. TURENNE
100157040
PROVINCE OF ONTARIO

DIMENSIONS, SUPPORTS AND LOADINGS SPECIFIED BY FABRICATOR TO BE VERIFIED BY BUILDING DESIGNER

BEARINGS

JT	FACTORED GROSS REACTION VERT	HORZ	MAXIMUM FACTORED GROSS REACTION DOWN	HORZ	UPLIFT	INPUT BRG IN-SX	REQRD BRG IN-SX
P	1722	0	1722	0	0	5-8	2-9
J	1722	0	1722	0	0	5-8	2-9

UNFACTORED REACTIONS

JT	1ST LCASE COMBINED	MAX./MIN. COMPONENT REACTIONS SNOW	LIVE	PERM.LIVE	WIND	DEAD	SOIL
P	1220	787 / 0	0 / 0	0 / 0	0 / 0	432 / 0	0 / 0
J	1220	787 / 0	0 / 0	0 / 0	0 / 0	432 / 0	0 / 0

BEARING MATERIAL TO BE SPF NO.2 OR BETTER AT JOINT(S) P, J

BRACING

TOP CHORD TO BE SHEATHED OR MAX. PURLIN SPACING = 4.08 FT.
MAX. UNBRACED BOTTOM CHORD LENGTH = 10.00 FT OR RIGID CEILING DIRECTLY APPLIED.

ALL PITCH BREAKS AND PERIMETER CORNER JOINTS MUST BE LATERALLY RESTRAINED.

1 LATERAL BRACE(S) AT 1/ 2 LENGTH OF F-N.

END VERTICAL(S) MUST BE SHEATHED OR HAVE BRACES AS INDICATED IN THE MAX. UNBRACED LENGTH COLUMN OF THE TABLE BELOW

LOADING

TOTAL LOAD CASES: (4)

CHORDS

MEMB. FR-TO	MAX. FACTORED FORCE (LBS)	FACTORED VERT. LOAD (PLF) FROM	TO	LC1 MAX CSI (LC)	MAX. UNBRAC LENGTH
A- B	0 / 48	-84.9	-84.9	0.12 (1)	10.00
B- C	-1304 / 0	-84.9	-84.9	0.33 (1)	5.30
C- D	-1590 / 0	-84.9	-84.9	0.84 (1)	4.09
D- E	-1591 / 0	-84.9	-84.9	0.85 (1)	4.08
E- F	-1591 / 0	-84.9	-84.9	0.85 (1)	4.08
F- G	-1591 / 0	-84.9	-84.9	0.85 (1)	4.08
G- H	-1304 / 0	-84.9	-84.9	0.33 (1)	5.30
H- I	0 / 48	-84.9	-84.9	0.12 (1)	10.00
P- B	-1697 / 0	0.0	0.0	0.22 (1)	6.38
J- H	-1697 / 0	0.0	0.0	0.22 (1)	6.38
P- O	0 / 0	-18.5	-18.5	0.16 (4)	10.00
O- N	0 / 775	-18.5	-18.5	0.28 (4)	10.00
N- M	0 / 1592	-18.5	-18.5	0.37 (1)	10.00
M- L	0 / 1592	-18.5	-18.5	0.37 (1)	10.00
L- K	0 / 775	-18.5	-18.5	0.28 (4)	10.00
K- J	0 / 0	-18.5	-18.5	0.16 (4)	10.00

WEBS

MEMB. FR-TO	MAX. FACTORED FORCE (LBS)	MAX CSI (LC)
O- C	-229 / 5	0.28 (1)
C- N	0 / 1164	0.19 (1)
N- D	-690 / 0	0.84 (1)
N- F	-1 / 0	0.00 (1)
L- F	-690 / 0	0.84 (1)
L- G	0 / 1165	0.19 (1)
K- G	-230 / 5	0.28 (1)
B- O	0 / 854	0.19 (1)
K- H	0 / 854	0.19 (1)

DESIGN CRITERIA

SPECIFIED LOADS:

TOP CH.	LL	=	23.3	PSF
	DL	=	6.0	PSF
BOT CH.	LL	=	0.0	PSF
	DL	=	7.4	PSF
TOTAL LOAD		=	36.7	PSF

SPACING = 24.0 IN. C/C

LOADING IN FLAT SECTION BASED ON A SLOPE OF 2.00/12 MINIMUM

THIS TRUSS IS DESIGNED FOR RESIDENTIAL OR SMALL BUILDING REQUIREMENTS OF PART 9, NBCC 2010

THIS DESIGN COMPLIES WITH:
- PART 9 OF OBC 2012 , BCBC 2012 , ABC 2014
- CSA 086-09
- TPIC 2011

(55 % OF 27.2 P.S.F. G.S.L. PLUS 8.4 P.S.F. RAIN LOAD) EQUALS 23.3 P.S.F. SPECIFIED ROOF LIVE LOAD

ALLOWABLE DEFL.(LL)= L/360 (1.03")
CALCULATED VERT. DEFL.(LL) = L/ 999 (0.06")
ALLOWABLE DEFL.(TL)= L/360 (1.03")
CALCULATED VERT. DEFL.(TL) = L/ 999 (0.14")

CSI: TC=0.85/1.00 (F-G:1) , BC=0.37/1.00 (L-N:1) , WB=0.84/1.00 (F-L:1) , SSI=0.30/1.00 (F-G:1)

DOL LUMBER=1.00 NAIL=1.00 LS BEND=1.10 COMP=1.10 SHEAR=1.10 TENS= 1.10

COMPANION LIVE LOAD FACTOR = 0.50

TRUSS PLATE MANUFACTURER IS NOT RESPONSIBLE FOR QUALITY CONTROL IN THE TRUSS MANUFACTURING PLANT .

NAIL VALUES

PLATE	GRIP(DRY) (PSI) MAX	MIN	SHEAR (PLI) MAX	MIN	SECTION (PLI) MAX	MIN
MT20	618	354	1667	788	1987	1656

PLATE PLACEMENT TOL. = 0.250 inches

PLATE ROTATION TOL. = 5.0 Deg.

JSI GRIP= 0.89 (P) (INPUT = 0.90)
JSI METAL= 0.57 (M) (INPUT = 1.00)

JOB NAME	TRUSS NAME	QUANTITY	PLY	JOB DESC.	DRWG NO.
313991	H24		1	TRUSS DESC. JT-39002	E-19112516

Alpa Roof Truss, Maple

Version 8.300 S Aug 9 2019 MiTek Industries, Inc. Fri Nov 8 13:10:08 2019 Page 1

ID:VRLqmcIDiflZCj2mk6F92VyQuye-UzmXa2Km0wCBRILCn16ShqW0XkUT5rwp7Cyv4uyLFHz

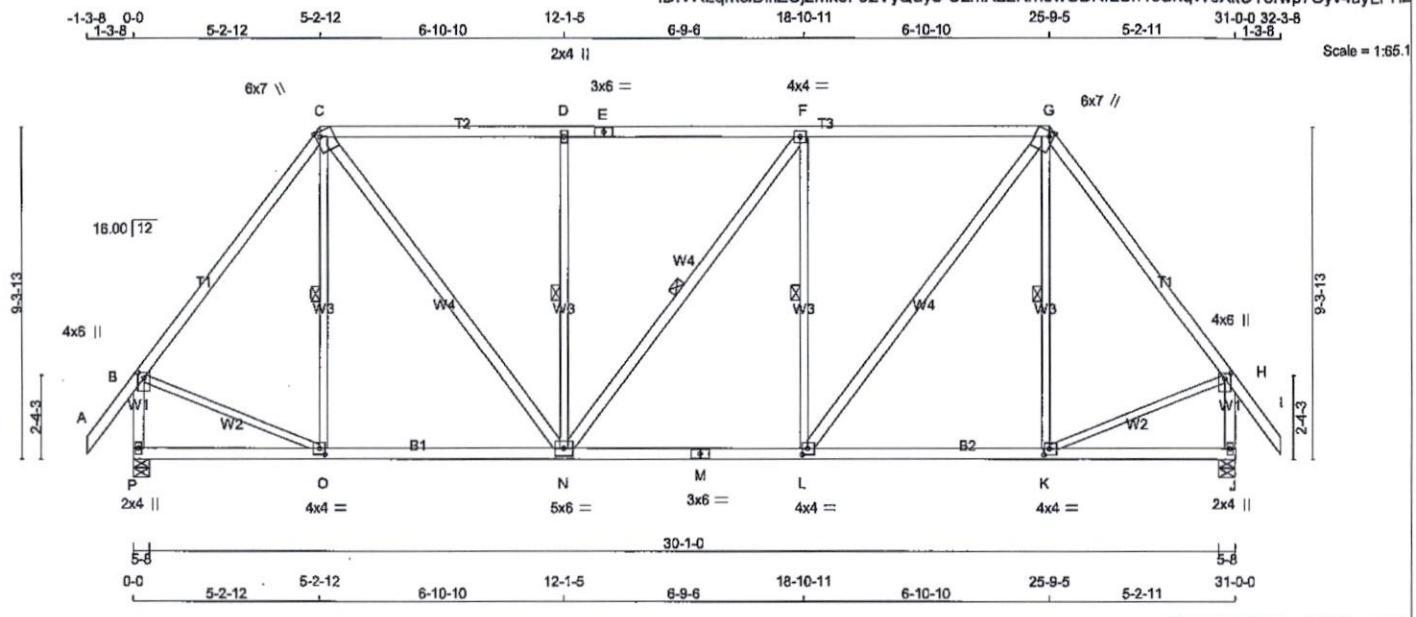

TOTAL WEIGHT = 2 X 163 = 327 lb

[M]

LUMBER

N. L. G. A. RULES

CHORDS	SIZE		LUMBER	DESCR.
A - C	2x4	DRY	No.2	SPF
C - E	2x4	DRY	No.2	SPF
E - G	2x4	DRY	No.2	SPF
G - I	2x4	DRY	No.2	SPF
P - B	2x4	DRY	No.2	SPF
J - H	2x4	DRY	No.2	SPF
P - M	2x4	DRY	No.2	SPF
M - J	2x4	DRY	No.2	SPF
ALL WEBS EXCEPT	2x3	DRY	No.2	SPF
C - N	2x4	DRY	No.2	SPF
N - F	2x4	DRY	No.2	SPF
L - G	2x4	DRY	No.2	SPF

DRY: SEASONED LUMBER.

PLATES (table is in inches)

JT	TYPE	PLATES	W	LEN	Y	X
B	TMVW+p	MT20	4.0	6.0	1.75	2.00
C	TTWW+m	MT20	6.0	7.0	Edge	1.50
D	TMW+w	MT20	2.0	4.0		
E	TS-t	MT20	3.0	6.0		
F	TMWW-t	MT20	4.0	4.0		
G	TTWW+m	MT20	6.0	7.0	Edge	1.50
H	TMVW+p	MT20	4.0	6.0	1.75	2.00
J	BMV1+p	MT20	2.0	4.0		
K, L, O						
K	BMWW-t	MT20	4.0	4.0	2.00	1.75
M	BS-t	MT20	3.0	6.0		
N	BMWWW-t	MT20	5.0	6.0		
P	BMV1+p	MT20	2.0	4.0		

Edge - INDICATES REFERENCE CORNER OF PLATE TOUCHES EDGE OF CHORD.

NOTE: Lateral brace(s) shown shall be 2x4 SPF #2

DIMENSIONS, SUPPORTS AND LOADINGS SPECIFIED BY FABRICATOR TO BE VERIFIED BY BUILDING DESIGNER

BEARINGS

JT	FACTORED GROSS REACTION VERT	HORZ	MAXIMUM FACTORED GROSS REACTION DOWN	HORZ	UPLIFT	INPUT BRG IN-SX	REQRD BRG IN-SX
P	1722	0	1722	0	0	5-8	2-9
J	1722	0	1722	0	0	5-8	2-9

UNFACTORED REACTIONS

JT	1ST LCASE COMBINED	MAX./MIN. COMPONENT REACTIONS SNOW	LIVE	PERM.LIVE	WIND	DEAD	SOIL
P	1220	787 / 0	0 / 0	0 / 0	0 / 0	432 / 0	0 / 0
J	1220	787 / 0	0 / 0	0 / 0	0 / 0	432 / 0	0 / 0

BEARING MATERIAL TO BE SPF NO.2 OR BETTER AT JOINT(S) P, J

BRACING

TOP CHORD TO BE SHEATHED OR MAX. PURLIN SPACING = 4.68 FT.
MAX. UNBRACED BOTTOM CHORD LENGTH = 10.00 FT OR RIGID CEILING DIRECTLY APPLIED.

ALL PITCH BREAKS AND PERIMETER CORNER JOINTS MUST BE LATERALLY RESTRAINED.

1 LATERAL BRACE(S) AT 1/ 2 LENGTH OF C-O, D-N, F-N, F-L, G-K.

END VERTICAL(S) MUST BE SHEATHED OR HAVE BRACES AS INDICATED IN THE MAX. UNBRACED LENGTH COLUMN OF THE TABLE BELOW

LOADING

TOTAL LOAD CASES: (4)

CHORDS

MEMB. FR-TO	MAX. FACTORED FORCE (LBS)	FACTORED VERT. LOAD LC1 (PLF) FROM	TO	MAX CSI (LC)	MAX. UNBRAC LENGTH
A- B	0 / 48	-84.9	-84.9	0.12 (1)	10.00
B- C	-1315 / 0	-84.9	-84.9	0.56 (1)	5.05
C- D	-1359 / 0	-84.9	-84.9	0.64 (1)	4.69
D- E	-1360 / 0	-84.9	-84.9	0.65 (1)	4.68
E- F	-1360 / 0	-84.9	-84.9	0.65 (1)	4.68
F- G	-1361 / 0	-84.9	-84.9	0.65 (1)	4.68
G- H	-1315 / 0	-84.9	-84.9	0.56 (1)	5.05
H- I	0 / 48	-84.9	-84.9	0.12 (1)	10.00
P- B	-1685 / 0	0.0	0.0	0.22 (1)	6.39
J- H	-1685 / 0	0.0	0.0	0.22 (1)	6.39
P- O	0 / 0	-18.5	-18.5	0.16 (4)	10.00
O- N	0 / 784	-18.5	-18.5	0.23 (4)	10.00
N- M	0 / 1361	-18.5	-18.5	0.31 (1)	10.00
M- L	0 / 1361	-18.5	-18.5	0.31 (1)	10.00
L- K	0 / 784	-18.5	-18.5	0.24 (4)	10.00
K- J	0 / 0	-18.5	-18.5	0.16 (4)	10.00

WEBS

MEMB. FR-TO	MAX. FACTORED FORCE (LBS)	MAX CSI (LC)
O- C	-163 / 33	0.09 (1)
C- N	0 / 947	0.15 (1)
N- D	-626 / 0	0.36 (1)
N- F	-2 / 0	0.00 (1)
L- F	-626 / 0	0.36 (1)
L- G	0 / 949	0.15 (1)
K- G	-165 / 32	0.09 (1)
B- O	0 / 837	0.19 (1)
K- H	0 / 837	0.19 (1)

DESIGN CRITERIA

SPECIFIED LOADS:

TOP CH.	LL	=	23.3	PSF
	DL	=	6.0	PSF
BOT CH.	LL	=	0.0	PSF
	DL	=	7.4	PSF
TOTAL LOAD		=	36.7	PSF

SPACING = 24.0 IN. C/C

LOADING IN FLAT SECTION BASED ON A SLOPE OF 2.00/12 MINIMUM

THIS TRUSS IS DESIGNED FOR RESIDENTIAL OR SMALL BUILDING REQUIREMENTS OF PART 9, NBCC 2010

THIS DESIGN COMPLIES WITH:
- PART 9 OF OBC 2012 , BCBC 2012 , ABC 2014
- CSA 086-09
- TPIC 2011

(55 % OF 27.2 P.S.F. G.S.L. PLUS 8.4 P.S.F. RAIN LOAD) EQUALS 23.3 P.S.F. SPECIFIED ROOF LIVE LOAD

ALLOWABLE DEFL.(LL)= L/360 (1.03")
CALCULATED VERT. DEFL.(LL) = L/ 999 (0.05")
ALLOWABLE DEFL.(TL)= L/360 (1.03")
CALCULATED VERT. DEFL.(TL) = L/ 999 (0.11")

CSI: TC=0.65/1.00 (F-G:1) , BC=0.31/1.00 (L-N:1) , WB=0.36/1.00 (F-L:1) , SSI=0.27/1.00 (F-G:1)

DOL LUMBER=1.00 NAIL=1.00 LS BEND=1.10 COMP=1.10 SHEAR=1.10 TENS= 1.10

COMPANION LIVE LOAD FACTOR = 0.50

TRUSS PLATE MANUFACTURER IS NOT RESPONSIBLE FOR QUALITY CONTROL IN THE TRUSS MANUFACTURING PLANT .

NAIL VALUES

PLATE	GRIP(DRY) (PSI) MAX	MIN	SHEAR (PLI) MAX	MIN	SECTION (PLI) MAX	MIN
MT20	618	354	1667	788	1987	1656

PLATE PLACEMENT TOL. = 0.250 inches

PLATE ROTATION TOL. = 5.0 Deg.

JSI GRIP= 0.88 (P) (INPUT = 0.90)
JSI METAL= 0.52 (B) (INPUT = 1.00)

JOB NAME	TRUSS NAME	QUANTITY	PLY	JOB DESC.	DRWG NO.
313991	H25		1	TRUSS DESC. JT-39002	E-19112517

Alpa Roof Truss, Maple

Version 8.300 S Aug 9 2019 MiTek Industries, Inc. Fri Nov 8 13:10:33 2019 Page 1
ID:VRLqmclDiflZCj2mk6F92VyQuye-Fmn_qbdS7cMex8m?In3JC52Mdp0wS8IUtbVjSxyLFHa

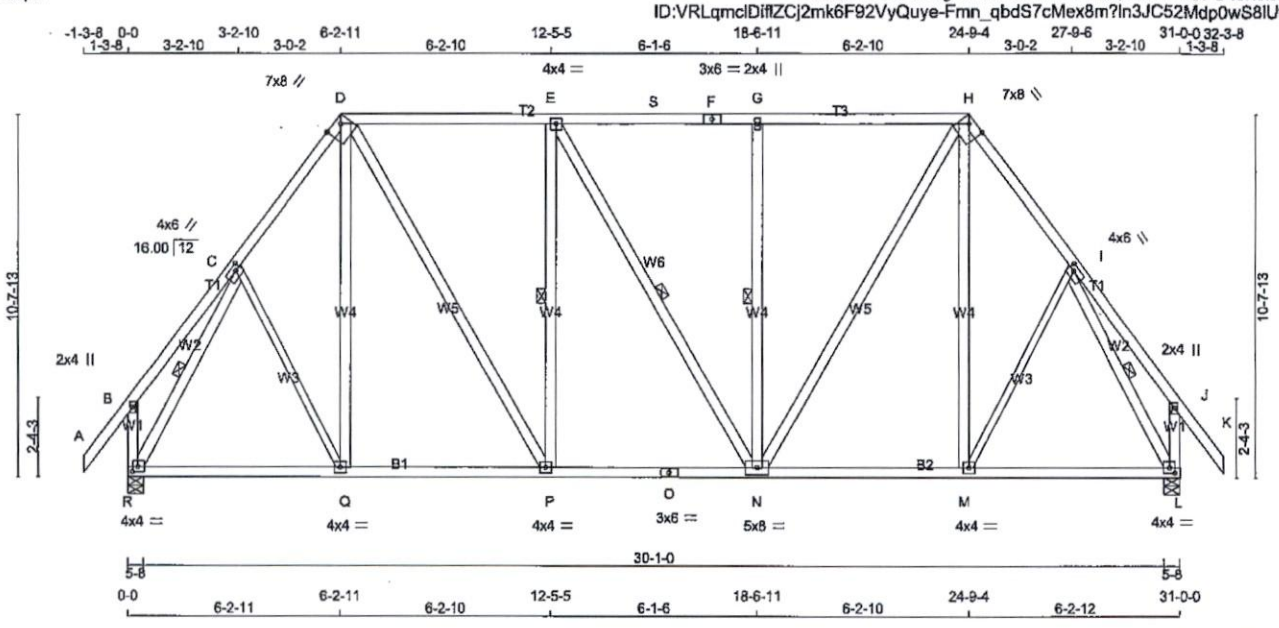

TOTAL WEIGHT = 7 X 202 = 1411 lb

[M][F]

LUMBER

N. L. G. A. RULES

CHORDS	SIZE		LUMBER	DESCR.
A - D	2x4	DRY	No.2	SPF
D - F	2x4	DRY	No.2	SPF
F - H	2x4	DRY	No.2	SPF
H - K	2x4	DRY	No.2	SPF
R - B	2x4	DRY	No.2	SPF
L - J	2x4	DRY	No.2	SPF
R - O	2x4	DRY	No.2	SPF
O - L	2x4	DRY	No.2	SPF
ALL WEBS	2x4	DRY	No.2	SPF
EXCEPT				
C - Q	2x3	DRY	No.2	SPF
M - I	2x3	DRY	No.2	SPF

DRY: SEASONED LUMBER.

PLATES (table is in inches)

JT	TYPE	PLATES	W	LEN	Y	X
B	TMV+p	MT20	2.0	4.0		
C	TMWW-t	MT20	4.0	6.0	1.75	2.00
D	TTWW-h	MT20	7.0	8.0	2.00	5.25
E	TMWW-t	MT20	4.0	4.0		
F	TS-t	MT20	3.0	6.0		
G	TMW+w	MT20	2.0	4.0		
H	TTWW-h	MT20	7.0	8.0	2.00	5.25
I	TMWW-t	MT20	4.0	6.0	1.75	2.00
J	TMV+p	MT20	2.0	4.0		
L	BMVW1-t	MT20	4.0	4.0	1.75	1.75
M, P, Q						
M	BMWW-t	MT20	4.0	4.0		
N	BMWWW-t	MT20	6.0	8.0		
O	BS-t	MT20	3.0	6.0		
R	BMVW1-t	MT20	4.0	4.0	1.75	1.75

NOTE: Lateral brace(s) shown shall be 2x4 SPF #2

LICENSED PROFESSIONAL ENGINEER
11/08/2019
R. TURENNE
100157040
PROVINCE OF ONTARIO

DIMENSIONS, SUPPORTS AND LOADINGS SPECIFIED BY FABRICATOR TO BE VERIFIED BY BUILDING DESIGNER

BEARINGS

JT	FACTORED GROSS REACTION VERT	HORZ	MAXIMUM FACTORED GROSS REACTION DOWN	HORZ	UPLIFT	INPUT BRG IN-SX	REQRD BRG IN-SX
R	1791	0	1791	0	0	5-8	1-15
L	1791	0	1791	0	0	5-8	1-15

UNFACTORED REACTIONS

JT	1ST LCASE COMBINED	MAX /MIN. COMPONENT REACTIONS SNOW	LIVE	PERM.LIVE	WIND	DEAD	SOIL
R	1275	787 / 0	0 / 0	0 / 0	0 / 0	488 / 0	0 / 0
L	1275	787 / 0	0 / 0	0 / 0	0 / 0	488 / 0	0 / 0

BEARING MATERIAL TO BE SPF NO.2 OR BETTER AT JOINT(S) R, L

BRACING

FOR SECTION D-H, MAX. PURLIN SPACING = 2.00 FT.
FOR OTHER SECTIONS, TOP CHORD TO BE SHEATHED OR MAX. PURLIN SPACING = 5.40 FT.
MAX. UNBRACED BOTTOM CHORD LENGTH = 10.00 FT OR RIGID CEILING DIRECTLY APPLIED.

ALL PITCH BREAKS AND PERIMETER CORNER JOINTS MUST BE LATERALLY RESTRAINED.

1 LATERAL BRACE(S) AT 1/ 2 LENGTH OF E-P, E-N, G-N, C-R, I-L

END VERTICAL(S) MUST BE SHEATHED OR HAVE BRACES AS INDICATED IN THE MAX. UNBRACED LENGTH COLUMN OF THE TABLE BELOW

LOADING

TOTAL LOAD CASES: (4)

CHORDS

MEMB. FR-TO	MAX. FACTORED FORCE (LBS)	FACTORED VERT. LOAD LC1 (PLF) FROM	TO	MAX CSI (LC)	MAX. UNBRAC LENGTH
A- B	0 / 48	-84.9	-84.9	0.12 (1)	10.00
B- C	0 / 24	-84.9	-84.9	0.13 (1)	10.00
C- D	-1404 / 0	-84.9	-84.9	0.13 (1)	5.40
D- E	-1260 / 0	-92.4	-92.4	0.43 (1)	2.00
E- S	-1259 / 0	-92.4	-92.4	0.39 (1)	2.00
S- F	-1259 / 0	-92.4	-92.4	0.39 (1)	2.00
F- G	-1259 / 0	-92.4	-92.4	0.39 (1)	2.00
G- H	-1259 / 0	-92.4	-92.4	0.43 (1)	2.00
H- I	-1404 / 0	-84.9	-84.9	0.13 (1)	5.40
I- J	0 / 24	-84.9	-84.9	0.13 (1)	10.00
J- K	0 / 48	-84.9	-84.9	0.12 (1)	10.00
R- B	-218 / 0	0.0	0.0	0.03 (1)	7.81
L- J	-218 / 0	0.0	0.0	0.03 (1)	7.81
R- Q	0 / 770	-18.5	-18.5	0.25 (4)	10.00
Q- P	0 / 823	-18.5	-18.5	0.26 (4)	10.00
P- O	0 / 1260	-18.5	-18.5	0.27 (1)	10.00
O- N	0 / 1260	-18.5	-18.5	0.27 (1)	10.00
N- M	0 / 823	-18.5	-18.5	0.26 (4)	10.00
M- L	0 / 770	-18.5	-18.5	0.25 (4)	10.00

WEBS

MEMB. FR-TO	MAX. FACTORED FORCE (LBS)	MAX CSI (LC)
C- Q	0 / 108	0.03 (4)
Q- D	0 / 75	0.02 (4)
D- P	0 / 846	0.14 (1)
P- E	-615 / 0	0.35 (1)
E- N	-2 / 0	0.00 (1)
N- G	-614 / 0	0.35 (1)
N- H	0 / 844	0.14 (1)
M- H	0 / 75	0.02 (4)
M- I	0 / 108	0.03 (4)
R- C	-1709 / 0	0.38 (1)
I- L	-1709 / 0	0.38 (1)

DESIGN CRITERIA

SPECIFIED LOADS:

TOP CH.	LL =	23.3	PSF
	DL =	6.0	PSF
BOT CH.	LL =	0.0	PSF
	DL =	7.4	PSF
TOTAL LOAD	=	36.7	PSF

SPACING = 24.0 IN. C/C

LOADING IN FLAT SECTION BASED ON PIGGYBACK TRUSS WITH SLOPES OF 6.00/12 AND -6.00/12 AND RESPECTIVE WALL HEIGHTS OF 0-0 AND 0-0 AND AN ADDITIONAL DEAD LOAD OF 3.0 P.S.F.

THIS TRUSS IS DESIGNED FOR RESIDENTIAL OR SMALL BUILDING REQUIREMENTS OF PART 9, NBCC 2010

THIS DESIGN COMPLIES WITH:
- PART 9 OF OBC 2012 , BCBC 2012 , ABC 2014
- CSA 086-09
- TPIC 2011

(55 % OF 27.2 P.S.F. G.S.L. PLUS 8.4 P.S.F. RAIN LOAD) EQUALS 23.3 P.S.F. SPECIFIED ROOF LIVE LOAD

ALLOWABLE DEFL.(LL)= L/360 (1.03")
CALCULATED VERT. DEFL.(LL) = L/ 999 (0.04")
ALLOWABLE DEFL.(TL)= L/360 (1.03")
CALCULATED VERT. DEFL.(TL) = L/ 999 (0.10")

CSI: TC=0.43/1.00 (D-E:1) , BC=0.27/1.00 (N-P:1) , WB=0.38/1.00 (I-L:1) , SSI=0.27/1.00 (D-E:1)

DOL LUMBER=1.00 NAIL=1.00 LS BEND=1.10 COMP=1.10 SHEAR=1.10 TENS= 1.10

COMPANION LIVE LOAD FACTOR = 0.50

AUTOSOLVE HEELS OFF

TRUSS PLATE MANUFACTURER IS NOT RESPONSIBLE FOR QUALITY CONTROL IN THE TRUSS MANUFACTURING PLANT .

NAIL VALUES

PLATE	GRIP(DRY) (PSI) MAX	MIN	SHEAR (PLI) MAX	MIN	SECTION (PLI) MAX	MIN
MT20	618	354	1667	788	1987	1656

PLATE PLACEMENT TOL. = 0.250 inches

PLATE ROTATION TOL. = 5.0 Deg.

JSI GRIP= 0.89 (P) (INPUT = 0.90)
JSI METAL= 0.45 (O) (INPUT = 1.00)

JOB NAME	TRUSS NAME	QUANTITY	PLY	JOB DESC.	DRWG NO.
313991	H26P		1	TRUSS DESC. JT-39002	E-19112518

Alpa Roof Truss, Maple

Version 8.300 S Aug 9 2019 MiTek Industries, Inc. Fri Nov 8 13:10:46 2019 Page 1
ID:VRLqmclDiflZC|2mk6F92VyQuye-NG3uY1nc3c?o?8FV0?oNEr5VA3T??5_Pt79vQhyLFHN

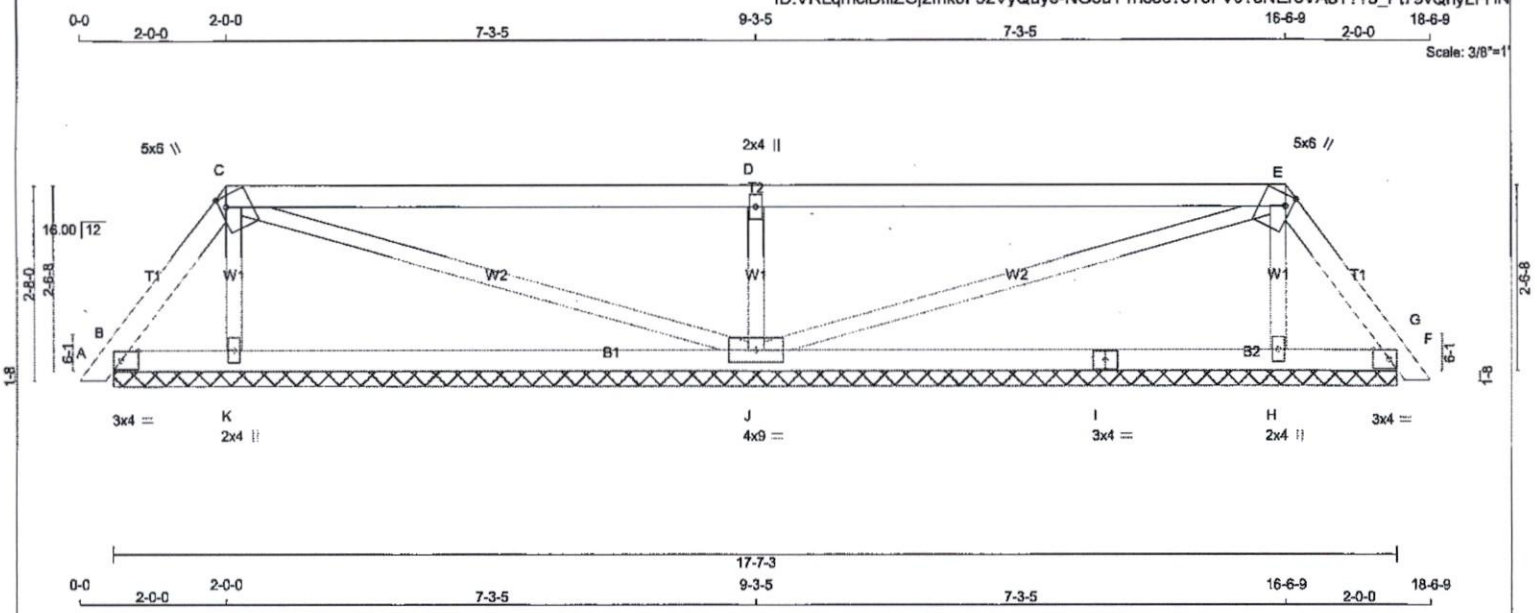

TOTAL WEIGHT = 3 X 61 = 182 lb [M]

LUMBER
N. L. G. A. RULES

CHORDS	SIZE		LUMBER	DESCR.
A - C	2x4	DRY	No.2	SPF
C - E	2x4	DRY	No.2	SPF
E - G	2x4	DRY	No.2	SPF
B - I	2x4	DRY	No.2	SPF
I - F	2x4	DRY	No.2	SPF
ALL WEBS	2x3	DRY	No.2	SPF

DRY: SEASONED LUMBER.

PLATES (table is in inches)

JT	TYPE	PLATES	W	LEN	Y	X
B	TMB1-I	MT20	3.0	4.0	1.50	2.75
C	TTWW+m	MT20	5.0	6.0	1.75	1.00
D	TMW+w	MT20	2.0	4.0		
E	TTWW+m	MT20	5.0	6.0	1.75	1.00
F	TMB1-I	MT20	3.0	4.0	1.50	2.75
H	BMW1+w	MT20	2.0	4.0		
I	BS-I	MT20	3.0	4.0		
J	BMWWW1-I	MT20	4.0	9.0		
K	BMW1+w	MT20	2.0	4.0		

NOTE: Lateral brace(s) shown shall be 2x4 SPF #2

DIMENSIONS, SUPPORTS AND LOADINGS SPECIFIED BY FABRICATOR TO BE VERIFIED BY BUILDING DESIGNER

BEARINGS

JT	FACTORED GROSS REACTION VERT	HORZ	MAXIMUM FACTORED GROSS REACTION DOWN	HORZ	UPLIFT	INPUT BRG IN-SX	REQRD BRG IN-SX
B	147	0	147	0	0	17-7-3 (4-0-0)	8-4
K	329	0	329	0	0	17-7-3 (4-0-0)	8-4
J	926	0	926	0	0	17-7-3 (4-0-0)	8-4
H	329	0	329	0	0	17-7-3 (4-0-0)	8-4
F	147	0	147	0	0	17-7-3 (4-0-0)	8-4

VALUE IN PARENTHESIS INDICATES EFFECTIVE BEARING LENGTH

UNFACTORED REACTIONS

JT	1ST LCASE COMBINED	MAX./MIN. COMPONENT REACTIONS SNOW	LIVE	PERM.LIVE	WIND	DEAD	SOIL
B	99	93 / 0	0 / 0	0 / 0	0 / 0	6 / 0	0 / 0
K	240	117 / 0	0 / 0	0 / 0	0 / 0	123 / 0	0 / 0
J	655	432 / 0	0 / 0	0 / 0	0 / 0	223 / 0	0 / 0
H	240	117 / 0	0 / 0	0 / 0	0 / 0	123 / 0	0 / 0
F	99	93 / 0	0 / 0	0 / 0	0 / 0	6 / 0	0 / 0

BEARING MATERIAL TO BE SPF NO.2 OR BETTER AT JOINT(S) B, K, J, H, F

BRACING
TOP CHORD TO BE SHEATHED OR MAX. PURLIN SPACING = 6.25 FT.
MAX. UNBRACED BOTTOM CHORD LENGTH = 10.00 FT OR RIGID CEILING DIRECTLY APPLIED.

ALL PITCH BREAKS AND PERIMETER CORNER JOINTS MUST BE LATERALLY RESTRAINED.

LOADING
TOTAL LOAD CASES: (4)

CHORDS

MEMB. FR-TO	MAX. FACTORED FORCE (LBS)	FACTORED VERT. LOAD LC1 (PLF) FROM	TO	MAX CSI (LC)	MAX. UNBRAC LENGTH
A- B	0 / 11	-84.9	-84.9	0.01 (1)	10.00
B- C	-92 / 0	-84.9	-84.9	0.03 (1)	6.25
C- D	-16 / 0	-84.9	-84.9	0.76 (1)	6.25
D- E	-16 / 0	-84.9	-84.9	0.76 (1)	6.25
E- F	-92 / 0	-84.9	-84.9	0.03 (1)	6.25
F- G	0 / 11	-84.9	-84.9	0.01 (1)	10.00
B- K	0 / 52	-18.5	-18.5	0.15 (4)	10.00
K- J	0 / 42	-18.5	-18.5	0.21 (4)	10.00
J- I	0 / 42	-18.5	-18.5	0.21 (4)	10.00
I- H	0 / 42	-18.5	-18.5	0.21 (4)	10.00
H- F	0 / 52	-18.5	-18.5	0.15 (4)	10.00

WEBS

MEMB. FR-TO	MAX. FACTORED FORCE (LBS)	MAX CSI (LC)
K- C	-213 / 0	0.03 (1)
C- J	-27 / 0	0.03 (1)
J- D	-771 / 0	0.12 (1)
J- E	-27 / 0	0.03 (1)
H- E	-213 / 0	0.03 (1)

DESIGN CRITERIA

SPECIFIED LOADS:

TOP CH.	LL =	23.3	PSF
	DL =	6.0	PSF
BOT CH.	LL =	0.0	PSF
	DL =	7.4	PSF
TOTAL LOAD	=	36.7	PSF

SPACING = 24.0 IN. C/C

LOADING IN FLAT SECTION BASED ON A SLOPE OF 2.00/12 MINIMUM

THIS TRUSS IS DESIGNED FOR RESIDENTIAL OR SMALL BUILDING REQUIREMENTS OF PART 9, NBCC 2010

THIS DESIGN COMPLIES WITH:
- PART 9 OF OBC 2012 , BCBC 2012 , ABC 2014
- CSA 086-09
- TPIC 2011

(55 % OF 27.2 P.S.F. G.S.L. PLUS 8.4 P.S.F. RAIN LOAD) EQUALS 23.3 P.S.F. SPECIFIED ROOF LIVE LOAD

CSI: TC=0.76/1.00 (C-D:1) , BC=0.21/1.00 (J-K:4) , WB=0.12/1.00 (D-J:1) , SSI=0.30/1.00 (C-D:1)

DOL LUMBER=1.00 NAIL=1.00 LS BEND=1.10 COMP=1.10 SHEAR=1.10 TENS= 1.10

COMPANION LIVE LOAD FACTOR = 0.50

TRUSS PLATE MANUFACTURER IS NOT RESPONSIBLE FOR QUALITY CONTROL IN THE TRUSS MANUFACTURING PLANT .

NAIL VALUES

PLATE	GRIP(DRY) (PSI) MAX	MIN	SHEAR (PLI) MAX	MIN	SECTION (PLI) MAX	MIN
MT20	618	354	1667	788	1987	1656

PLATE PLACEMENT TOL. = 0.250 inches

PLATE ROTATION TOL. = 5.0 Deg.

JSI GRIP= 0.64 (E) (INPUT = 0.90)
JSI METAL= 0.16 (I) (INPUT = 1.00)

JOB NAME	TRUSS NAME	QUANTITY	PLY	JOB DESC.	DRWG NO.
313991	H31		1	TRUSS DESC. JT-39002	E-19112519

Alpa Roof Truss, Maple

Version 8.300 S Aug 9 2019 MiTek Industries, Inc. Fri Nov 8 12:52:46 2019 Page 1
ID:VRLqmclDiflZCj2mk6F92VyQuye-_VpctIj9Pmw1QAhxlBQ6S5MwTihkyYuRX5XmWHyLFYF

Scale = 1:44.2

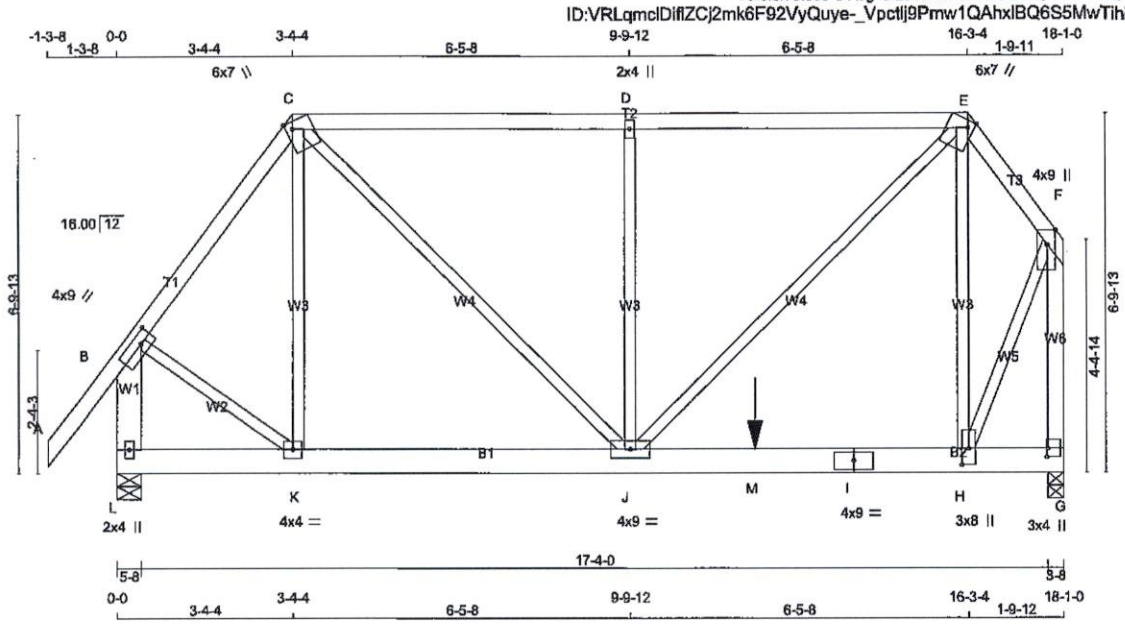

TOTAL WEIGHT = 103 lb

[M]

LUMBER

N. L. G. A. RULES

CHORDS	SIZE		LUMBER	DESCR.
A - C	2x4	DRY	No.2	SPF
C - E	2x4	DRY	No.2	SPF
E - F	2x4	DRY	No.2	SPF
L - B	2x6	DRY	No.2	SPF
G - F	2x4	DRY	No.2	SPF
L - I	2x6	DRY	No.2	SPF
I - G	2x6	DRY	No.2	SPF
ALL WEBS EXCEPT	2x3	DRY	No.2	SPF

DRY: SEASONED LUMBER.

PLATES (table is in inches)

JT	TYPE	PLATES	W	LEN	Y	X
B	TMVW-t	MT20	4.0	9.0	2.00	3.00
C	TTWW+m	MT20	6.0	7.0	Edge	1.50
D	TMW+w	MT20	2.0	4.0		
E	TTWW+m	MT20	6.0	7.0	Edge	1.50
F	TMVW+p	MT20	4.0	9.0	3.25	1.75
G	BMV1+p	MT20	3.0	4.0	2.00	0.25
H	BMWW+t	MT20	3.0	8.0	3.75	1.50
I	BS-t	MT20	4.0	9.0		
J	BMWWW-t	MT20	4.0	9.0		
K	BMWW-t	MT20	4.0	4.0		
L	BMV1+p	MT20	2.0	4.0		

Edge - INDICATES REFERENCE CORNER OF PLATE TOUCHES EDGE OF CHORD.

NOTE: Lateral brace(s) shown shall be 2x4 SPF #2

LICENSED PROFESSIONAL ENGINEER
11/08/2019
R. TURENNE
100157040
PROVINCE OF ONTARIO

DIMENSIONS, SUPPORTS AND LOADINGS SPECIFIED BY FABRICATOR TO BE VERIFIED BY BUILDING DESIGNER

BEARINGS

JT	FACTORED GROSS REACTION VERT	HORZ	MAXIMUM FACTORED GROSS REACTION DOWN	HORZ	UPLIFT	INPUT BRG IN-SX	REQRD BRG IN-SX
L	1473	0	1473	0	0	5-8	1-10
G	2099	0	2099	0	0	3-8	3-5

UNFACTORED REACTIONS

JT	1ST LCASE COMBINED	MAX./MIN. COMPONENT REACTIONS SNOW	LIVE	PERM.LIVE	WIND	DEAD	SOIL
L	1043	675 / 0	0 / 0	0 / 0	0 / 0	368 / 0	0 / 0
G	1490	946 / 0	0 / 0	0 / 0	0 / 0	544 / 0	0 / 0

BEARING MATERIAL TO BE SPF NO.2 OR BETTER AT JOINT(S) L, G

BRACING

TOP CHORD TO BE SHEATHED OR MAX. PURLIN SPACING = 4.24 FT.
MAX. UNBRACED BOTTOM CHORD LENGTH = 10.00 FT OR RIGID CEILING DIRECTLY APPLIED.

ALL PITCH BREAKS AND PERIMETER CORNER JOINTS MUST BE LATERALLY RESTRAINED.

LOADING

TOTAL LOAD CASES: (4)

CHORDS

MEMB. FR-TO	MAX. FORCE (LBS)	FACTORED VERT. LOAD (PLF) FROM	TO	LC1	MAX CSI (LC)	MAX. UNBRAC LENGTH
A- B	0 / 48	-84.9	-84.9	0.13 (1)	10.00	
B- C	-1018 / 0	-84.9	-84.9	0.21 (1)	5.94	
C- D	-1447 / 0	-84.9	-84.9	0.76 (1)	4.24	
D- E	-1447 / 0	-84.9	-84.9	0.76 (1)	4.24	
E- F	-1166 / 0	-84.9	-84.9	0.07 (1)	5.81	
L- B	-1409 / 0	0.0	0.0	0.13 (1)	7.81	
G- F	-2435 / 0	0.0	0.0	0.78 (1)	5.42	
L- K	0 / 0	-18.5	-18.5	0.08 (1)	10.00	
K- J	0 / 600	-18.5	-18.5	0.52 (1)	10.00	
J- M	0 / 689	-18.5	-18.5	0.95 (1)	10.00	
M- I	0 / 689	-118.6	-118.6	0.95 (1)	10.00	
I- H	0 / 689	-118.6	-118.6	0.95 (1)	10.00	
H- G	0 / 0	-118.6	-118.6	0.63 (1)	10.00	

WEBS

MEMB. FR-TO	MAX. FORCE (LBS)	MAX CSI (LC)
K- C	-383 / 0	0.29 (1)
C- J	0 / 1193	0.30 (1)
J- D	-658 / 0	0.49 (1)
J- E	0 / 1068	0.26 (1)
H- E	-108 / 22	0.08 (1)
B- K	0 / 690	0.17 (1)
H- F	0 / 1578	0.39 (1)

FACTORED CONCENTRATED LOADS (LBS)

JT	LOC.	LC1	MAX-	MAX+	FACE	DIR.	TYPE	HEEL	CONN.
M	12-2-9	-994	-994	—	FRONT	VERT	TOTAL	—	C1

CONNECTION REQUIREMENTS

1) C1: A SUITABLE HANGER/MECHANICAL CONNECTION IS REQUIRED.

DESIGN CRITERIA

*** SPECIAL LOADS ANALYSIS ***
GEOMETRY AND/OR BASIC LOADS CHANGED BY USER.
LOADS WERE DERIVED FROM USER INPUT
NO FURTHER MODIFICATIONS WERE MADE

SPECIFIED LOADS:

TOP CH.	LL =	23.3	PSF
	DL =	6.0	PSF
BOT CH.	LL =	0.0	PSF
	DL =	7.4	PSF
TOTAL LOAD	=	36.7	PSF

SPACING = 24.0 IN. C/C

LOADING IN FLAT SECTION BASED ON A SLOPE OF 2.00/12 MINIMUM

GIRDER TYPE: CStdGirder
START DISTANCE = 12-2-8
START SPAN CARRIED = 5-10-8
END DISTANCE = 18-1-0
END SPAN CARRIED = 5-10-8
END WALL WIDTH = 0-0
APPLIED TO FRONT SIDE OF BOTTOM CHORD.
- ADDT'L LOADS BASED ON 55 % OF GSL.

*** NON STANDARD GIRDER ***
ADDT'L USER-DEFINED LOADS APPLIED TO ALL LOAD CASES.

THIS TRUSS IS DESIGNED FOR RESIDENTIAL OR SMALL BUILDING REQUIREMENTS OF PART 9, NBCC 2010

THIS DESIGN COMPLIES WITH:
- PART 9 OF OBC 2012 , BCBC 2012 , ABC 2014
- CSA 086-09
- TPIC 2011

(55 % OF 27.2 P.S.F. G.S.L. PLUS 8.4 P.S.F. RAIN LOAD) EQUALS 23.3 P.S.F. SPECIFIED ROOF LIVE LOAD

ALLOWABLE DEFL.(LL)= L/360 (0.60")
CALCULATED VERT. DEFL.(LL) = L/ 999 (0.11")
ALLOWABLE DEFL.(TL)= L/360 (0.60")
CALCULATED VERT. DEFL.(TL) = L/ 999 (0.21")

CSI: TC=0.78/1.00 (F-G:1) , BC=0.95/1.00 (H-J:1) , WB=0.49/1.00 (D-J:1) , SSI=0.50/1.00 (H-J:1)

DOL LUMBER=1.00 NAIL=1.00 LS BEND=1.00 COMP=1.00 SHEAR=1.00 TENS= 1.00

COMPANION LIVE LOAD FACTOR = 0.50

AUTOSOLVE RIGHT HEEL ONLY

TRUSS PLATE MANUFACTURER IS NOT RESPONSIBLE FOR QUALITY CONTROL IN THE TRUSS MANUFACTURING PLANT .

CONTINUED ON PAGE 2

JOB NAME	TRUSS NAME	QUANTITY	PLY	JOB DESC.	DRWG NO.
313991	H32		1	TRUSS DESC. JT-39002	E-19112520

Alpa Roof Truss, Maple

Version 8.300 S Aug 9 2019 MiTek Industries, Inc. Fri Nov 8 13:11:06 2019 Page 1
ID:VRLqmcIDifiZCj2mk6F92VyQuye-n7HSlt19MlWyODnLBC9312w?G7JhhzVLTE?z7XyLFH3

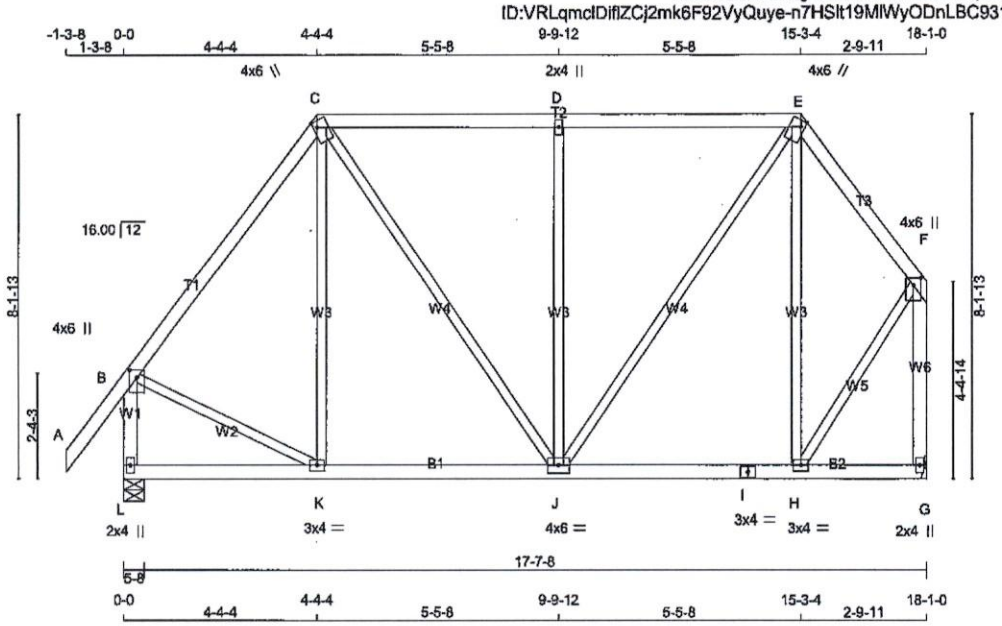

TOTAL WEIGHT = 98 lb

LUMBER

N. L. G. A. RULES

CHORDS	SIZE		LUMBER	DESCR.
A - C	2x4	DRY	No.2	SPF
C - E	2x4	DRY	No.2	SPF
E - F	2x4	DRY	No.2	SPF
L - B	2x4	DRY	No.2	SPF
G - F	2x4	DRY	No.2	SPF
L - I	2x4	DRY	No.2	SPF
I - G	2x4	DRY	No.2	SPF
ALL WEBS EXCEPT	2x3	DRY	No.2	SPF

DRY: SEASONED LUMBER.

PLATES (table is in inches)

JT	TYPE	PLATES	W	LEN	Y	X
B	TMVW+p	MT20	4.0	6.0	2.00	2.00
C	TTWW+m	MT20	4.0	6.0	1.75	1.00
D	TMW+w	MT20	2.0	4.0		
E	TTWW+m	MT20	4.0	6.0	1.75	1.00
F	TMVW+p	MT20	4.0	6.0	2.00	2.00
G	BMV1+p	MT20	2.0	4.0		
H	BMWW-t	MT20	3.0	4.0		
I	BS-t	MT20	3.0	4.0		
J	BMWWW-t	MT20	4.0	6.0		
K	BMWW-t	MT20	3.0	4.0		
L	BMV1+p	MT20	2.0	4.0		

NOTE: Lateral brace(s) shown shall be 2x4 SPF #2

DIMENSIONS, SUPPORTS AND LOADINGS SPECIFIED BY FABRICATOR TO BE VERIFIED BY BUILDING DESIGNER

BEARINGS

JT	FACTORED GROSS REACTION VERT	HORZ	MAXIMUM FACTORED GROSS REACTION DOWN	HORZ	UPLIFT	INPUT BRG IN-SX	REQRD BRG IN-SX
L	1054	0	1054	0	0	5-8	1-9
G	935	0	935	0	0	MECHANICAL	

A SUITABLE HANGER/MECHANICAL CONNECTION IS REQUIRED AT JOINT G. MINIMUM BEARING LENGTH AT JOINT G = 1-8.

UNFACTORED REACTIONS

JT	1ST LCASE COMBINED	MAX./MIN. COMPONENT REACTIONS SNOW	LIVE	PERM.LIVE	WIND	DEAD	SOIL
L	746	487 / 0	0 / 0	0 / 0	0 / 0	259 / 0	0 / 0
G	663	421 / 0	0 / 0	0 / 0	0 / 0	242 / 0	0 / 0

BEARING MATERIAL TO BE SPF NO.2 OR BETTER AT JOINT(S) L

BRACING

TOP CHORD TO BE SHEATHED OR MAX. PURLIN SPACING = 6.25 FT.
MAX. UNBRACED BOTTOM CHORD LENGTH = 10.00 FT OR RIGID CEILING DIRECTLY APPLIED.

ALL PITCH BREAKS AND PERIMETER CORNER JOINTS MUST BE LATERALLY RESTRAINED.

LOADING

TOTAL LOAD CASES: (4)

CHORDS

MEMB. FR-TO	MAX. FACTORED FORCE (LBS)	FACTORED VERT. LOAD LC1 (PLF) FROM	TO	MAX CSI (LC)	MAX. UNBRAC LENGTH
A- B	0 / 48	-84.9	-84.9	0.12 (1)	10.00
B- C	-675 / 0	-84.9	-84.9	0.30 (1)	6.25
C- D	-577 / 0	-84.9	-84.9	0.43 (1)	6.25
D- E	-577 / 0	-84.9	-84.9	0.43 (1)	6.25
E- F	-494 / 0	-84.9	-84.9	0.12 (1)	6.25
L- B	-1023 / 0	0.0	0.0	0.13 (1)	7.75
G- F	-921 / 0	0.0	0.0	0.31 (1)	7.81
L- K	0 / 0	-18.5	-18.5	0.10 (4)	10.00
K- J	0 / 402	-18.5	-18.5	0.14 (4)	10.00
J- I	0 / 289	-18.5	-18.5	0.13 (4)	10.00
I- H	0 / 289	-18.5	-18.5	0.13 (4)	10.00
H- G	0 / 0	-18.5	-18.5	0.08 (4)	10.00

WEBS

MEMB. FR-TO	MAX. FACTORED FORCE (LBS)	MAX CSI (LC)
K- C	-75 / 46	0.10 (1)
C- J	0 / 306	0.07 (1)
J- D	-565 / 0	0.73 (1)
J- E	0 / 502	0.11 (1)
H- E	-315 / 0	0.41 (1)
B- K	0 / 440	0.10 (1)
H- F	0 / 500	0.11 (1)

DESIGN CRITERIA

SPECIFIED LOADS:

TOP CH.	LL =	23.3	PSF
	DL =	6.0	PSF
BOT CH.	LL =	0.0	PSF
	DL =	7.4	PSF
TOTAL LOAD	=	36.7	PSF

SPACING = 24.0 IN. C/C

LOADING IN FLAT SECTION BASED ON A SLOPE OF 2.00/12 MINIMUM

THIS TRUSS IS DESIGNED FOR RESIDENTIAL OR SMALL BUILDING REQUIREMENTS OF PART 9, NBCC 2010

THIS DESIGN COMPLIES WITH:
- PART 9 OF OBC 2012 , BCBC 2012 , ABC 2014
- CSA 086-09
- TPIC 2011

(55 % OF 27.2 P.S.F. G.S.L. PLUS 8.4 P.S.F. RAIN LOAD) EQUALS 23.3 P.S.F. SPECIFIED ROOF LIVE LOAD

ALLOWABLE DEFL.(LL)= L/360 (0.60")
CALCULATED VERT. DEFL.(LL) = L/ 999 (0.02")
ALLOWABLE DEFL.(TL)= L/360 (0.60")
CALCULATED VERT. DEFL.(TL) = L/ 999 (0.03")

CSI: TC=0.43/1.00 (D-E:1) , BC=0.14/1.00 (J-K:4) , WB=0.73/1.00 (D-J:1) , SSI=0.22/1.00 (C-D:1)

DOL LUMBER=1.00 NAIL=1.00 LS BEND=1.10 COMP=1.10 SHEAR=1.10 TENS= 1.10

COMPANION LIVE LOAD FACTOR = 0.50

TRUSS PLATE MANUFACTURER IS NOT RESPONSIBLE FOR QUALITY CONTROL IN THE TRUSS MANUFACTURING PLANT .

NAIL VALUES

PLATE	GRIP(DRY) (PSI) MAX	MIN	SHEAR (PLI) MAX	MIN	SECTION (PLI) MAX	MIN
MT20	618	354	1667	788	1987	1656

PLATE PLACEMENT TOL. = 0.250 inches

PLATE ROTATION TOL. = 5.0 Deg.

JSI GRIP= 0.87 (H) (INPUT = 0.90)
JSI METAL= 0.29 (B) (INPUT = 1.00)

JOB NAME	TRUSS NAME	QUANTITY	PLY	JOB DESC.	DRWG NO.
313991	H33		1	TRUSS DESC. JT-39002	E-19112521

Alpa Roof Truss, Maple

Version 8.300 S Aug 9 2019 MiTek Industries, Inc. Fri Nov 8 13:11:11 2019 Page 1
ID:VRLqmclDiftZCj2mk6F92VyQuye-844Loa4IAH8FU_gJ_lIEk6dsf8_gML?4dWjkokyLFH_

Scale = 1:59.5

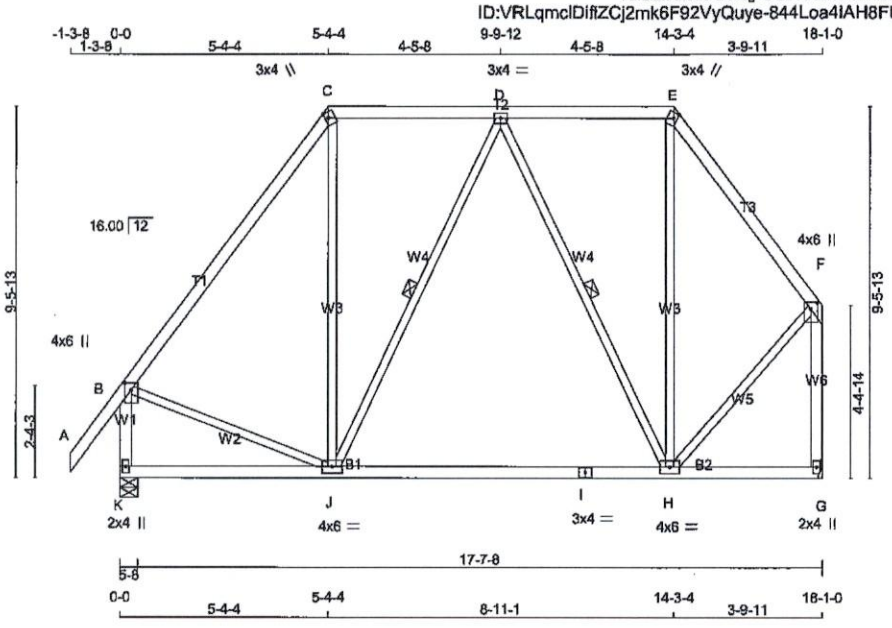

TOTAL WEIGHT = 98 lb

[M][F]

LUMBER

N. L. G. A. RULES

CHORDS	SIZE		LUMBER	DESCR.
A - C	2x4	DRY	No.2	SPF
C - E	2x4	DRY	No.2	SPF
E - F	2x4	DRY	No.2	SPF
K - B	2x4	DRY	No.2	SPF
G - F	2x4	DRY	No.2	SPF
K - I	2x4	DRY	No.2	SPF
I - G	2x4	DRY	No.2	SPF
ALL WEBS EXCEPT	2x3	DRY	No.2	SPF

DRY: SEASONED LUMBER.

PLATES (table is in inches)

JT	TYPE	PLATES	W	LEN	Y	X
B	TMVW+p	MT20	4.0	6.0	2.00	2.00
C	TTW+m	MT20	3.0	4.0	1.75	1.00
D	TMWW-t	MT20	3.0	4.0		
E	TTW+m	MT20	3.0	4.0	1.75	1.00
F	TMVW+p	MT20	4.0	6.0	2.00	2.00
G	BMV1+p	MT20	2.0	4.0		
H	BMWWW-t	MT20	4.0	6.0		
I	BS-t	MT20	3.0	4.0		
J	BMWWW-t	MT20	4.0	6.0		
K	BMV1+p	MT20	2.0	4.0		

NOTE: Lateral brace(s) shown shall be 2x4 SPF #2

LICENSED PROFESSIONAL ENGINEER
11/08/2019
R. TURENNE
100157040
PROVINCE OF ONTARIO

DIMENSIONS, SUPPORTS AND LOADINGS SPECIFIED BY FABRICATOR TO BE VERIFIED BY BUILDING DESIGNER

BEARINGS

JT	FACTORED GROSS REACTION VERT	HORZ	MAXIMUM FACTORED GROSS REACTION DOWN	HORZ	UPLIFT	INPUT BRG	REQRD BRG
K	1054	0	1054	0	0	5-8	1-9
G	935	0	935	0	0	MECHANICAL	

A SUITABLE HANGER/MECHANICAL CONNECTION IS REQUIRED AT JOINT G. MINIMUM BEARING LENGTH AT JOINT G = 1-8.

UNFACTORED REACTIONS

JT	1ST LCASE COMBINED	MAX./MIN. COMPONENT REACTIONS SNOW	LIVE	PERM.LIVE	WIND	DEAD	SOIL
K	746	487 / 0	0 / 0	0 / 0	0 / 0	259 / 0	0 / 0
G	663	421 / 0	0 / 0	0 / 0	0 / 0	242 / 0	0 / 0

BEARING MATERIAL TO BE SPF NO.2 OR BETTER AT JOINT(S) K

BRACING

TOP CHORD TO BE SHEATHED OR MAX. PURLIN SPACING = 6.25 FT.
MAX. UNBRACED BOTTOM CHORD LENGTH = 10.00 FT OR RIGID CEILING DIRECTLY APPLIED.

ALL PITCH BREAKS AND PERIMETER CORNER JOINTS MUST BE LATERALLY RESTRAINED.

1 LATERAL BRACE(S) AT 1/ 2 LENGTH OF D-J, D-H.

END VERTICAL(S) MUST BE SHEATHED OR HAVE BRACES AS INDICATED IN THE MAX. UNBRACED LENGTH COLUMN OF THE TABLE BELOW

LOADING

TOTAL LOAD CASES: (4)

CHORDS

MEMB. FR-TO	MAX. FACTORED FORCE (LBS)	FACTORED VERT. LOAD LC1 (PLF) FROM	TO	MAX CSI (LC)	MAX. UNBRAC LENGTH
A- B	0 / 48	-84.9	-84.9	0.12 (1)	10.00
B- C	-665 / 0	-84.9	-84.9	0.33 (1)	6.25
C- D	-398 / 0	-84.9	-84.9	0.22 (1)	6.25
D- E	-322 / 0	-84.9	-84.9	0.21 (1)	6.25
E- F	-538 / 0	-84.9	-84.9	0.16 (1)	6.25
K- B	-1022 / 0	0.0	0.0	0.13 (1)	7.75
G- F	-922 / 0	0.0	0.0	0.31 (1)	7.81
K- J	0 / 0	-18.5	-18.5	0.24 (4)	10.00
J- I	0 / 470	-18.5	-18.5	0.28 (4)	10.00
I- H	0 / 470	-18.5	-18.5	0.28 (4)	10.00
H- G	0 / 0	-18.5	-18.5	0.22 (4)	10.00

WEBS

MEMB. FR-TO	MAX. FACTORED FORCE (LBS)	MAX CSI (LC)
J- C	0 / 158	0.04 (4)
J- D	-166 / 0	0.13 (1)
D- H	-345 / 0	0.26 (1)
H- E	0 / 123	0.04 (4)
B- J	0 / 422	0.09 (1)
H- F	0 / 459	0.10 (1)

DESIGN CRITERIA

SPECIFIED LOADS:

TOP CH.	LL	=	23.3	PSF
	DL	=	6.0	PSF
BOT CH.	LL	=	0.0	PSF
	DL	=	7.4	PSF
TOTAL LOAD		=	36.7	PSF

SPACING = 24.0 IN. C/C

LOADING IN FLAT SECTION BASED ON A SLOPE OF 2.00/12 MINIMUM

THIS TRUSS IS DESIGNED FOR RESIDENTIAL OR SMALL BUILDING REQUIREMENTS OF PART 9, NBCC 2010

THIS DESIGN COMPLIES WITH:
- PART 9 OF OBC 2012 , BCBC 2012 , ABC 2014
- CSA 086-09
- TPIC 2011

(55 % OF 27.2 P.S.F. G.S.L. PLUS 8.4 P.S.F. RAIN LOAD) EQUALS 23.3 P.S.F. SPECIFIED ROOF LIVE LOAD

ALLOWABLE DEFL.(LL)= L/360 (0.60")
CALCULATED VERT. DEFL.(LL) = L/ 999 (0.01")
ALLOWABLE DEFL.(TL)= L/360 (0.60")
CALCULATED VERT. DEFL.(TL) = L/ 999 (0.10")

CSI: TC=0.33/1.00 (B-C:1) , BC=0.28/1.00 (H-J:4) , WB=0.26/1.00 (D-H:1) , SSI=0.18/1.00 (C-D:1)

DOL LUMBER=1.00 NAIL=1.00 LS BEND=1.10 COMP=1.10 SHEAR=1.10 TENS= 1.10

COMPANION LIVE LOAD FACTOR = 0.50

TRUSS PLATE MANUFACTURER IS NOT RESPONSIBLE FOR QUALITY CONTROL IN THE TRUSS MANUFACTURING PLANT .

NAIL VALUES

PLATE	GRIP(DRY) (PSI) MAX	MIN	SHEAR (PLI) MAX	MIN	SECTION (PLI) MAX	MIN
MT20	618	354	1667	788	1987	1656

PLATE PLACEMENT TOL. = 0.250 inches

PLATE ROTATION TOL. = 5.0 Deg.

JSI GRIP= 0.84 (J) (INPUT = 0.90)
JSI METAL= 0.29 (B) (INPUT = 1.00)

JOB NAME	TRUSS NAME	QUANTITY	PLY	JOB DESC.	DRWG NO.
313991	H34		1	TRUSS DESC. JT-39002	E-19112522

Alpa Roof Truss, Maple

Version 8.300 S Aug 9 2019 MiTek Industries, Inc. Fri Nov 8 13:11:20 2019 Page 1
ID:VRLqmclDiflZCj2mk6F92VyQuye-Np7IhfBx22Hz4Ns2?8PLc?VP9m3czlCPhPOjcjyLFGr

Scale = 1:65.2

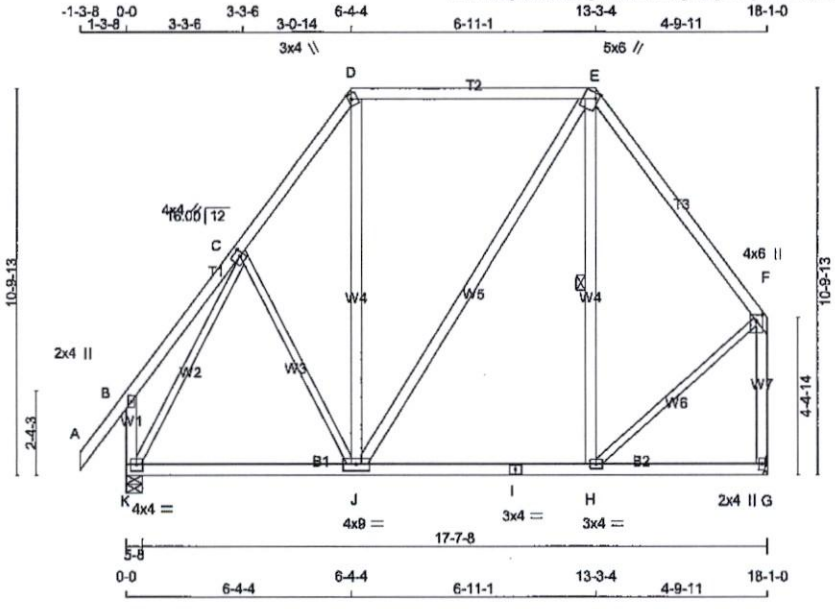

TOTAL WEIGHT = 113 lb

[M][F]

LUMBER

N. L. G. A. RULES

CHORDS	SIZE		LUMBER	DESCR.
A - D	2x4	DRY	No.2	SPF
D - E	2x4	DRY	2100F 1.8E	SPF
E - F	2x4	DRY	No.2	SPF
K - B	2x4	DRY	No.2	SPF
G - F	2x4	DRY	No.2	SPF
K - I	2x4	DRY	No.2	SPF
I - G	2x4	DRY	No.2	SPF
ALL WEBS EXCEPT	2x4	DRY	No.2	SPF
C - J	2x3	DRY	No.2	SPF
K - C	2x3	DRY	No.2	SPF
H - F	2x3	DRY	No.2	SPF

DRY: SEASONED LUMBER.

PLATES (table is in inches)

JT	TYPE	PLATES	W	LEN	Y	X
B	TMV+p	MT20	2.0	4.0		
C	TMWW-t	MT20	4.0	4.0	2.00	1.25
D	TTW+m	MT20	3.0	4.0	1.75	1.00
E	TTWW+m	MT20	5.0	6.0	1.75	1.00
F	TMVW+p	MT20	4.0	6.0	2.00	2.00
G	BMV1+p	MT20	2.0	4.0		
H	BMWW-t	MT20	3.0	4.0		
I	BS-t	MT20	3.0	4.0		
J	BMWWW-t	MT20	4.0	9.0		
K	BMVW1-t	MT20	4.0	4.0		

NOTE: Lateral brace(s) shown shall be 2x4 SPF #2

LICENSED PROFESSIONAL ENGINEER
11/08/2019
R. TURENNE
100157040
PROVINCE OF ONTARIO

DIMENSIONS, SUPPORTS AND LOADINGS SPECIFIED BY FABRICATOR TO BE VERIFIED BY BUILDING DESIGNER

BEARINGS

JT	FACTORED GROSS REACTION VERT	HORZ	MAXIMUM FACTORED GROSS REACTION DOWN	HORZ	UPLIFT	INPUT BRG IN-SX	REQRD BRG IN-SX
K	1054	0	1054	0	0	5-8	1-8
G	935	0	935	0	0	MECHANICAL	

A SUITABLE HANGER/MECHANICAL CONNECTION IS REQUIRED AT JOINT G. MINIMUM BEARING LENGTH AT JOINT G = 1-8.

UNFACTORED REACTIONS

JT	1ST LCASE COMBINED	MAX./MIN. COMPONENT REACTIONS SNOW	LIVE	PERM.LIVE	WIND	DEAD	SOIL
K	746	487 / 0	0 / 0	0 / 0	0 / 0	259 / 0	0 / 0
G	663	421 / 0	0 / 0	0 / 0	0 / 0	242 / 0	0 / 0

BEARING MATERIAL TO BE SPF NO.2 OR BETTER AT JOINT(S) K

BRACING

TOP CHORD TO BE SHEATHED OR MAX. PURLIN SPACING = 6.25 FT.
MAX. UNBRACED BOTTOM CHORD LENGTH = 10.00 FT OR RIGID CEILING DIRECTLY APPLIED.

ALL PITCH BREAKS AND PERIMETER CORNER JOINTS MUST BE LATERALLY RESTRAINED.

1 LATERAL BRACE(S) AT 1/ 2 LENGTH OF E-H.

END VERTICAL(S) MUST BE SHEATHED OR HAVE BRACES AS INDICATED IN THE MAX. UNBRACED LENGTH COLUMN OF THE TABLE BELOW

LOADING

TOTAL LOAD CASES: (4)

CHORDS

MEMB. FR-TO	MAX. FACTORED FORCE (LBS)	FACTORED VERT. LOAD LC1 (PLF) FROM	TO	MAX CSI (LC)	MAX. UNBRAC LENGTH
A- B	0 / 48	-84.9	-84.9	0.12 (1)	10.00
B- C	0 / 25	-84.9	-84.9	0.14 (1)	10.00
C- D	-651 / 0	-84.9	-84.9	0.11 (1)	6.25
D- E	-375 / 0	-84.9	-84.9	0.34 (1)	6.25
E- F	-541 / 0	-84.9	-84.9	0.26 (1)	6.25
K- B	-220 / 0	0.0	0.0	0.03 (1)	7.81
G- F	-900 / 0	0.0	0.0	0.31 (1)	7.81
K- J	0 / 400	-18.5	-18.5	0.23 (4)	10.00
J- I	0 / 321	-18.5	-18.5	0.23 (4)	10.00
I- H	0 / 321	-18.5	-18.5	0.23 (4)	10.00
H- G	0 / 0	-18.5	-18.5	0.13 (4)	10.00

WEBS

MEMB. FR-TO	MAX. FACTORED FORCE (LBS)	MAX CSI (LC)
C- J	-55 / 12	0.05 (1)
J- D	0 / 111	0.03 (4)
J- E	0 / 99	0.02 (1)
H- E	-147 / 31	0.09 (1)
K- C	-882 / 0	0.78 (1)
H- F	0 / 416	0.09 (1)

DESIGN CRITERIA

SPECIFIED LOADS:

TOP CH.	LL	=	23.3	PSF
	DL	=	6.0	PSF
BOT CH.	LL	=	0.0	PSF
	DL	=	7.4	PSF
TOTAL LOAD		=	36.7	PSF

SPACING = 24.0 IN. C/C

LOADING IN FLAT SECTION BASED ON A SLOPE OF 2.00/12 MINIMUM

THIS TRUSS IS DESIGNED FOR RESIDENTIAL OR SMALL BUILDING REQUIREMENTS OF PART 9, NBCC 2010

THIS DESIGN COMPLIES WITH:
- PART 9 OF OBC 2012 , BCBC 2012 , ABC 2014
- CSA 086-09
- TPIC 2011

(55 % OF 27.2 P.S.F. G.S.L. PLUS 8.4 P.S.F. RAIN LOAD) EQUALS 23.3 P.S.F. SPECIFIED ROOF LIVE LOAD

ALLOWABLE DEFL.(LL)= L/360 (0.60")
CALCULATED VERT. DEFL.(LL) = L/ 999 (0.01")
ALLOWABLE DEFL.(TL)= L/360 (0.60")
CALCULATED VERT. DEFL.(TL) = L/ 999 (0.05")

CSI: TC=0.34/1.00 (D-E:1) , BC=0.23/1.00 (J-K:4) , WB=0.78/1.00 (C-K:1) , SSI=0.23/1.00 (D-E:1)

DOL LUMBER=1.00 NAIL=1.00 LS BEND=1.10 COMP=1.10 SHEAR=1.10 TENS= 1.10

COMPANION LIVE LOAD FACTOR = 0.50

TRUSS PLATE MANUFACTURER IS NOT RESPONSIBLE FOR QUALITY CONTROL IN THE TRUSS MANUFACTURING PLANT .

NAIL VALUES

PLATE	GRIP(DRY) (PSI) MAX	MIN	SHEAR (PLI) MAX	MIN	SECTION (PLI) MAX	MIN
MT20	618	354	1667	788	1987	1656

PLATE PLACEMENT TOL. = 0.250 Inches

PLATE ROTATION TOL. = 5.0 Deg.

JSI GRIP= 0.88 (C) (INPUT = 0.90)
JSI METAL= 0.33 (C) (INPUT = 1.00)

JOB NAME	TRUSS NAME	QUANTITY	PLY	JOB DESC.	DRWG NO.
313991	H35		1	TRUSS DESC. JT-39002	E-19112523

Alpa Roof Truss, Maple

Version 8.300 S Aug 9 2019 MiTek Industries, Inc. Fri Nov 8 12:47:11 2019 Page 1
ID:VRLqmclDiflZCj2mk6F92VyQuye-l23zaCf1IrjZkhaYdKvYNR_ppfW6y6l7UTuXFCyLFdU

Scale = 1:37.2

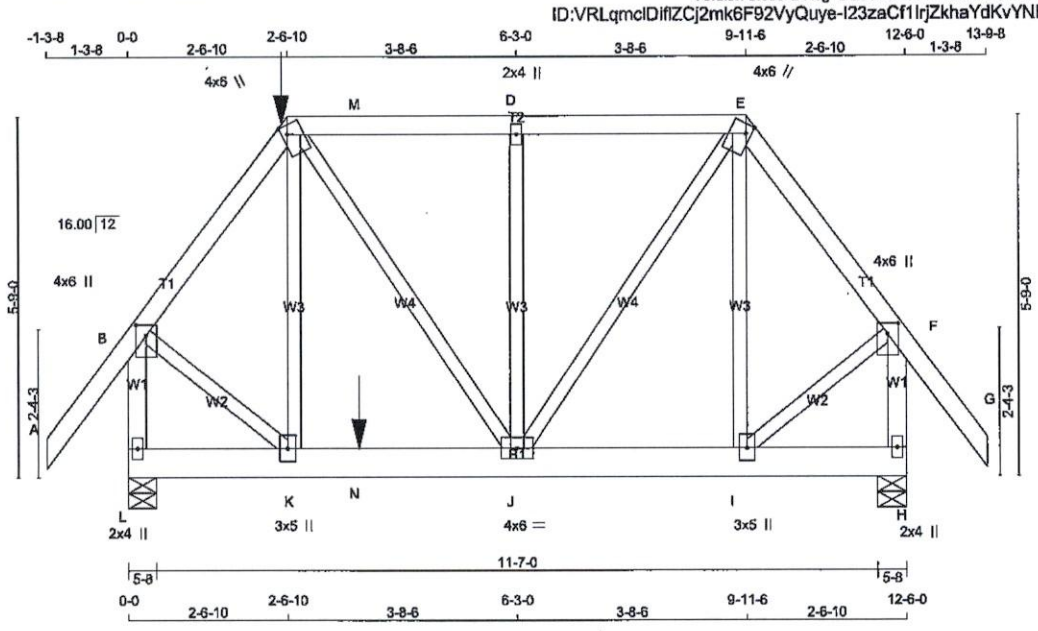

TOTAL WEIGHT = 77 lb

LUMBER
N. L. G. A. RULES

CHORDS	SIZE		LUMBER	DESCR.
A - C	2x4	DRY	No.2	SPF
C - E	2x4	DRY	No.2	SPF
E - G	2x4	DRY	No.2	SPF
L - B	2x4	DRY	No.2	SPF
H - F	2x4	DRY	No.2	SPF
L - H	2x6	DRY	No.2	SPF
ALL WEBS EXCEPT	2x3	DRY	No.2	SPF

DRY: SEASONED LUMBER.

PLATES (table is in inches)

JT	TYPE	PLATES	W	LEN	Y	X
B	TMVW+p	MT20	4.0	6.0	2.00	2.00
C	TTWW+m	MT20	4.0	6.0	1.75	1.00
D	TMW+w	MT20	2.0	4.0		
E	TTWW+m	MT20	4.0	6.0	1.75	1.00
F	TMVW+p	MT20	4.0	6.0	2.00	2.00
H	BMV1+p	MT20	2.0	4.0		
I	BMWW+t	MT20	3.0	5.0		
J	BMWWW-t	MT20	4.0	6.0		
K	BMWW+t	MT20	3.0	5.0		
L	BMV1+p	MT20	2.0	4.0		

NOTE: Lateral brace(s) shown shall be 2x4 SPF #2

LICENSED PROFESSIONAL ENGINEER
11/08/2019
R. TURENNE
100157040
PROVINCE OF ONTARIO

DIMENSIONS, SUPPORTS AND LOADINGS SPECIFIED BY FABRICATOR TO BE VERIFIED BY BUILDING DESIGNER

BEARINGS

JT	FACTORED GROSS REACTION VERT	HORZ	MAXIMUM FACTORED GROSS REACTION DOWN	HORZ	UPLIFT	INPUT BRG IN-SX	REQRD BRG IN-SX
L	1242	0	1242	0	0	5-8	1-13
H	945	0	945	0	0	5-8	1-8

UNFACTORED REACTIONS

JT	1ST LCASE COMBINED	MAX./MIN. COMPONENT REACTIONS SNOW	LIVE	PERM.LIVE	WIND	DEAD	SOIL
L	880	569 / 0	0 / 0	0 / 0	0 / 0	311 / 0	0 / 0
H	669	438 / 0	0 / 0	0 / 0	0 / 0	230 / 0	0 / 0

BEARING MATERIAL TO BE SPF NO.2 OR BETTER AT JOINT(S) L, H

BRACING
TOP CHORD TO BE SHEATHED OR MAX. PURLIN SPACING = 6.25 FT.
MAX. UNBRACED BOTTOM CHORD LENGTH = 10.00 FT OR RIGID CEILING DIRECTLY APPLIED.

ALL PITCH BREAKS AND PERIMETER CORNER JOINTS MUST BE LATERALLY RESTRAINED.

LOADING
TOTAL LOAD CASES: (4)

CHORDS

MEMB. FR-TO	MAX. FACTORED FORCE (LBS)	FACTORED VERT. LOAD (PLF) FROM	TO	LC1 MAX CSI (LC)	MAX. UNBRAC LENGTH
A- B	0 / 48	-84.9	-84.9	0.13 (1)	10.00
B- C	-846 / 0	-84.9	-84.9	0.12 (1)	6.25
C- M	-624 / 0	-124.6	-124.6	0.22 (1)	6.25
M- D	-624 / 0	-84.9	-84.9	0.22 (1)	6.25
D- E	-624 / 0	-84.9	-84.9	0.22 (1)	6.25
E- F	-568 / 0	-84.9	-84.9	0.11 (1)	6.25
F- G	0 / 48	-84.9	-84.9	0.13 (1)	10.00
L- B	-1263 / 0	0.0	0.0	0.17 (1)	7.13
H- F	-924 / 0	0.0	0.0	0.12 (1)	7.81
L- K	0 / 0	-27.2	-27.2	0.11 (1)	10.00
K- N	0 / 506	-27.2	-27.2	0.26 (1)	10.00
N- J	0 / 506	-18.5	-18.5	0.26 (1)	10.00
J- I	0 / 334	-18.5	-18.5	0.10 (1)	10.00
I- H	0 / 0	-18.5	-18.5	0.01 (4)	10.00

WEBS

MEMB. FR-TO	MAX. FACTORED FORCE (LBS)	MAX CSI (LC)
K- C	0 / 149	0.04 (4)
C- J	0 / 208	0.05 (1)
J- D	-380 / 0	0.18 (1)
J- E	0 / 508	0.13 (1)
I- E	-197 / 0	0.10 (1)
B- K	0 / 616	0.15 (1)
I- F	0 / 414	0.10 (1)

FACTORED CONCENTRATED LOADS (LBS)

JT	LOC.	LC1	MAX-	MAX+	FACE	DIR.	TYPE	HEEL	CONN.
C	2-6-10	-86	-86	—	FRONT	VERT	TOTAL	—	C1
N	3-8-7	-493	-493	—	FRONT	VERT	TOTAL	—	C1

CONNECTION REQUIREMENTS

1) **C1:** A SUITABLE HANGER/MECHANICAL CONNECTION IS REQUIRED.

[M]

DESIGN CRITERIA

*** SPECIAL LOADS ANALYSIS ***
GEOMETRY AND/OR BASIC LOADS CHANGED BY USER.
LOADS WERE DERIVED FROM USER INPUT
NO FURTHER MODIFICATIONS WERE MADE

SPECIFIED LOADS:

TOP CH.	LL	=	23.3	PSF
	DL	=	6.0	PSF
BOT CH.	LL	=	0.0	PSF
	DL	=	7.4	PSF
TOTAL LOAD		=	36.7	PSF

SPACING = 24.0 IN. C/C

LOADING IN FLAT SECTION BASED ON A SLOPE OF 2.00/12 MINIMUM

GIRDER TYPE: CPrimeHip
SIDE SETBACK = 2-6-10
END SETBACK = 3-10-8
END WALL WIDTH = 0-0
CORNER FRAMING TYPE: CONVENTIONAL
END JACK TYPE: CONVENTIONAL
APPLIED TO FRONT SIDE
- ADDT'L LOADS BASED ON 55 % OF GSL.
LOADS APPLIED TO FIRST 3-8-7 OF SPAN MEASURED FROM THE LEFT.

*** NON STANDARD GIRDER ***
ADDT'L USER-DEFINED LOADS APPLIED TO ALL LOAD CASES.

THIS TRUSS IS DESIGNED FOR RESIDENTIAL OR SMALL BUILDING REQUIREMENTS OF PART 9, NBCC 2010

THIS DESIGN COMPLIES WITH:
- PART 9 OF OBC 2012 , BCBC 2012 , ABC 2014
- CSA 086-09
- TPIC 2011

(55 % OF 27.2 P.S.F. G.S.L. PLUS 8.4 P.S.F. RAIN LOAD) EQUALS 23.3 P.S.F. SPECIFIED ROOF LIVE LOAD

ALLOWABLE DEFL.(LL)= L/360 (0.42")
CALCULATED VERT. DEFL.(LL) = L/ 999 (0.01")
ALLOWABLE DEFL.(TL)= L/360 (0.42")
CALCULATED VERT. DEFL.(TL) = L/ 999 (0.03")

CSI: TC=0.22/1.00 (C-D:1) , BC=0.26/1.00 (J-K:1) , WB=0.18/1.00 (D-J:1) , SSI=0.27/1.00 (J-K:1)

DOL LUMBER=1.00 NAIL=1.00 LS BEND=1.00 COMP=1.00 SHEAR=1.00 TENS= 1.00

COMPANION LIVE LOAD FACTOR = 0.50

TRUSS PLATE MANUFACTURER IS NOT RESPONSIBLE FOR QUALITY CONTROL IN THE TRUSS MANUFACTURING PLANT .

CONTINUED ON PAGE 2

JOB NAME	TRUSS NAME	QUANTITY	PLY	JOB DESC.		DRWG NO.
313991	H36		1	TRUSS DESC.	JT-39002	E-19112524

Alpa Roof Truss, Maple

Version 8.300 S Aug 9 2019 MiTek Industries, Inc. Fri Nov 8 13:11:25 2019 Page 1
ID:VRLqmcIDiflZCj2mk6F92VyQuye-jnwekNF4tavFA8k?oi?WJ3CHznpseke8rh6THxyLFGm

Scale = 1:49.1

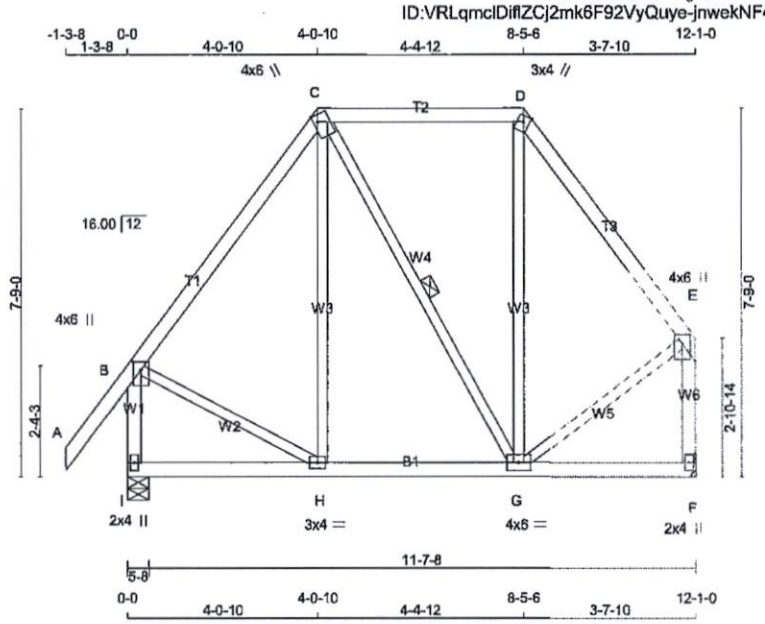

TOTAL WEIGHT = 67 lb

[M][F]

LUMBER

N. L. G. A. RULES

CHORDS	SIZE		LUMBER	DESCR.
A - C	2x4	DRY	No.2	SPF
C - D	2x4	DRY	No.2	SPF
D - E	2x4	DRY	No.2	SPF
I - B	2x4	DRY	No.2	SPF
F - E	2x4	DRY	No.2	SPF
I - F	2x4	DRY	No.2	SPF
ALL WEBS EXCEPT	2x3	DRY	No.2	SPF

DRY: SEASONED LUMBER.

PLATES (table is in inches)

JT	TYPE	PLATES	W	LEN	Y	X
B	TMVW+p	MT20	4.0	6.0	2.00	2.00
C	TTWW+m	MT20	4.0	6.0	1.75	1.00
D	TTW+m	MT20	3.0	4.0	Edge	
E	TMVW+p	MT20	4.0	6.0	2.00	2.00
F	BMV1+p	MT20	2.0	4.0		
G	BMWWW-t	MT20	4.0	6.0		
H	BMWW-t	MT20	3.0	4.0		
I	BMV1+p	MT20	2.0	4.0		

Edge - INDICATES REFERENCE CORNER OF PLATE TOUCHES EDGE OF CHORD.

NOTE: Lateral brace(s) shown shall be 2x4 SPF #2

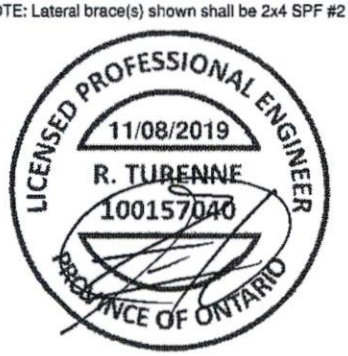

DIMENSIONS, SUPPORTS AND LOADINGS SPECIFIED BY FABRICATOR TO BE VERIFIED BY BUILDING DESIGNER

BEARINGS

JT	FACTORED GROSS REACTION VERT	HORZ	MAXIMUM FACTORED GROSS REACTION DOWN	HORZ	UPLIFT	INPUT BRG IN-SX	REQRD BRG IN-SX
I	744	0	744	0	0	5-8	1-8
F	624	0	624	0	0	MECHANICAL	

A SUITABLE HANGER/MECHANICAL CONNECTION IS REQUIRED AT JOINT F. MINIMUM BEARING LENGTH AT JOINT F = 1-8.

UNFACTORED REACTIONS

JT	1ST LCASE COMBINED	MAX./MIN. COMPONENT REACTIONS SNOW	LIVE	PERM.LIVE	WIND	DEAD	SOIL
I	526	347 / 0	0 / 0	0 / 0	0 / 0	179 / 0	0 / 0
F	443	281 / 0	0 / 0	0 / 0	0 / 0	162 / 0	0 / 0

BEARING MATERIAL TO BE SPF NO.2 OR BETTER AT JOINT(S) I

BRACING

TOP CHORD TO BE SHEATHED OR MAX. PURLIN SPACING = 6.25 FT.
MAX. UNBRACED BOTTOM CHORD LENGTH = 10.00 FT OR RIGID CEILING DIRECTLY APPLIED.

ALL PITCH BREAKS AND PERIMETER CORNER JOINTS MUST BE LATERALLY RESTRAINED.

1 LATERAL BRACE(S) AT 1/ 2 LENGTH OF C-G.

END VERTICAL(S) MUST BE SHEATHED OR HAVE BRACES AS INDICATED IN THE MAX. UNBRACED LENGTH COLUMN OF THE TABLE BELOW

LOADING

TOTAL LOAD CASES: (4)

CHORDS

MEMB. FR-TO	MAX. FACTORED FORCE (LBS)	FACTORED VERT. LOAD LC1 (PLF) FROM	TO	MAX CSI (LC)	MAX. UNBRAC LENGTH
A- B	0 / 48	-84.9	-84.9	0.12 (1)	10.00
B- C	-389 / 0	-84.9	-84.9	0.18 (1)	6.25
C- D	-218 / 0	-84.9	-84.9	0.21 (1)	6.25
D- E	-368 / 0	-84.9	-84.9	0.15 (1)	6.25
I- B	-713 / 0	0.0	0.0	0.09 (1)	7.81
F- E	-597 / 0	0.0	0.0	0.09 (1)	7.81
I- H	0 / 0	-18.5	-18.5	0.07 (4)	10.00
H- G	0 / 232	-18.5	-18.5	0.10 (4)	10.00
G- F	0 / 0	-18.5	-18.5	0.06 (4)	10.00

WEBS

MEMB. FR-TO	MAX. FACTORED FORCE (LBS)	MAX CSI (LC)
H- C	-24 / 55	0.03 (1)
C- G	-26 / 0	0.01 (1)
G- D	-46 / 43	0.05 (1)
B- H	0 / 256	0.06 (1)
G- E	0 / 264	0.06 (1)

DESIGN CRITERIA

SPECIFIED LOADS:

TOP CH.	LL	=	23.3	PSF
	DL	=	6.0	PSF
BOT CH.	LL	=	0.0	PSF
	DL	=	7.4	PSF
TOTAL LOAD		=	36.7	PSF

SPACING = 24.0 IN. C/C

LOADING IN FLAT SECTION BASED ON A SLOPE OF 2.00/12 MINIMUM

THIS TRUSS IS DESIGNED FOR RESIDENTIAL OR SMALL BUILDING REQUIREMENTS OF PART 9, NBCC 2010

THIS DESIGN COMPLIES WITH:
- PART 9 OF OBC 2012 , BCBC 2012 , ABC 2014
- CSA 086-09
- TPIC 2011

(55 % OF 27.2 P.S.F. G.S.L. PLUS 8.4 P.S.F. RAIN LOAD) EQUALS 23.3 P.S.F. SPECIFIED ROOF LIVE LOAD

ALLOWABLE DEFL.(LL)= L/360 (0.40")
CALCULATED VERT. DEFL.(LL) = L/ 999 (0.00")
ALLOWABLE DEFL.(TL)= L/360 (0.40")
CALCULATED VERT. DEFL.(TL) = L/ 999 (0.01")

CSI: TC=0.21/1.00 (C-D:1) , BC=0.10/1.00 (G-H:4) , WB=0.06/1.00 (E-G:1) , SSI=0.15/1.00 (C-D:1)

DOL LUMBER=1.00 NAIL=1.00 LS BEND=1.10 COMP=1.10 SHEAR=1.10 TENS= 1.10

COMPANION LIVE LOAD FACTOR = 0.50

TRUSS PLATE MANUFACTURER IS NOT RESPONSIBLE FOR QUALITY CONTROL IN THE TRUSS MANUFACTURING PLANT .

NAIL VALUES

PLATE	GRIP(DRY) (PSI) MAX	MIN	SHEAR (PLI) MAX	MIN	SECTION (PLI) MAX	MIN
MT20	618	354	1667	788	1987	1656

PLATE PLACEMENT TOL. = 0.250 inches

PLATE ROTATION TOL. = 5.0 Deg.

JSI GRIP= 0.79 (D) (INPUT = 0.90)
JSI METAL= 0.19 (B) (INPUT = 1.00)

JOB NAME	TRUSS NAME	QUANTITY	PLY	JOB DESC. / TRUSS DESC.	DRWG NO.
313991	H37		1	JT-39002	E-19112525

Alpa Roof Truss, Maple

Version 8.300 S Aug 9 2019 MiTek Industries, Inc. Fri Nov 8 13:11:31 2019 Page 1
ID:VRLqmclDiflZCj2mk6F92VyQuye-YwHv?QKqTQgPu3B99y6wYKSHSCrU2SG1DdZoUayLFGg

Scale = 1:61.3

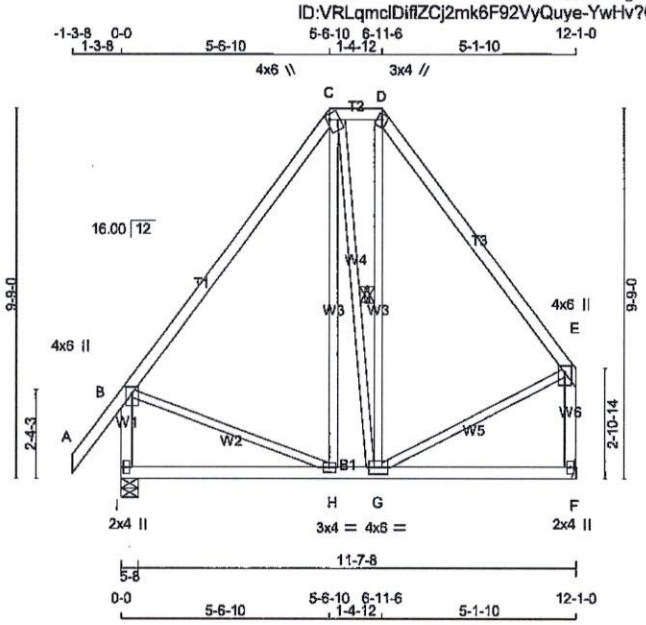

TOTAL WEIGHT = 76 lb

[M][F]

LUMBER

N. L. G. A. RULES

CHORDS	SIZE		LUMBER	DESCR.
A - C	2x4	DRY	No.2	SPF
C - D	2x4	DRY	No.2	SPF
D - E	2x4	DRY	No.2	SPF
I - B	2x4	DRY	No.2	SPF
F - E	2x4	DRY	No.2	SPF
I - F	2x4	DRY	No.2	SPF
ALL WEBS EXCEPT	2x3	DRY	No.2	SPF

DRY: SEASONED LUMBER.

PLATES (table is in inches)

JT	TYPE	PLATES	W	LEN	Y	X
B	TMVW+p	MT20	4.0	6.0	2.00	2.00
C	TTWW+m	MT20	4.0	6.0	1.75	1.00
D	TTW+m	MT20	3.0	4.0	Edge	
E	TMVW+p	MT20	4.0	6.0	2.00	2.00
F	BMV1+p	MT20	2.0	4.0		
G	BMWWW-t	MT20	4.0	6.0		
H	BMWW-t	MT20	3.0	4.0		
I	BMV1+p	MT20	2.0	4.0		

Edge - INDICATES REFERENCE CORNER OF PLATE TOUCHES EDGE OF CHORD.

NOTE: Lateral brace(s) shown shall be 2x4 SPF #2

LICENSED PROFESSIONAL ENGINEER
11/08/2019
R. TURBINE
100157040
PROVINCE OF ONTARIO

DIMENSIONS, SUPPORTS AND LOADINGS SPECIFIED BY FABRICATOR TO BE VERIFIED BY BUILDING DESIGNER

BEARINGS

JT	FACTORED GROSS REACTION VERT	HORZ	MAXIMUM FACTORED GROSS REACTION DOWN	HORZ	UPLIFT	INPUT BRG IN-SX	REQRD BRG IN-SX
I	744	0	744	0	0	5-8	1-8
F	624	0	624	0	0	MECHANICAL	

A SUITABLE HANGER/MECHANICAL CONNECTION IS REQUIRED AT JOINT F. MINIMUM BEARING LENGTH AT JOINT F = 1-8.

UNFACTORED REACTIONS

JT	1ST LCASE COMBINED	MAX./MIN. COMPONENT REACTIONS SNOW	LIVE	PERM.LIVE	WIND	DEAD	SOIL
I	526	347 / 0	0 / 0	0 / 0	0 / 0	179 / 0	0 / 0
F	443	281 / 0	0 / 0	0 / 0	0 / 0	162 / 0	0 / 0

BEARING MATERIAL TO BE SPF NO.2 OR BETTER AT JOINT(S) I

BRACING

TOP CHORD TO BE SHEATHED OR MAX. PURLIN SPACING = 6.25 FT.
MAX. UNBRACED BOTTOM CHORD LENGTH = 10.00 FT OR RIGID CEILING DIRECTLY APPLIED.

ALL PITCH BREAKS AND PERIMETER CORNER JOINTS MUST BE LATERALLY RESTRAINED.

1 LATERAL BRACE(S) AT 1/ 2 LENGTH OF C-G, D-G.

END VERTICAL(S) MUST BE SHEATHED OR HAVE BRACES AS INDICATED IN THE MAX. UNBRACED LENGTH COLUMN OF THE TABLE BELOW

LOADING

TOTAL LOAD CASES: (4)

CHORDS

MEMB. FR-TO	MAX. FACTORED FORCE (LBS)	FACTORED VERT. LOAD LC1 (PLF) FROM	TO	MAX CSI (LC)	MAX. UNBRAC LENGTH
A- B	0 / 48	-84.9	-84.9	0.12 (1)	10.00
B- C	-343 / 0	-84.9	-84.9	0.34 (1)	6.25
C- D	-201 / 0	-84.9	-84.9	0.02 (1)	6.25
D- E	-337 / 0	-84.9	-84.9	0.29 (1)	6.25
I- B	-701 / 0	0.0	0.0	0.09 (1)	7.81
F- E	-585 / 0	0.0	0.0	0.09 (1)	7.81
I- H	0 / 0	-18.5	-18.5	0.13 (4)	10.00
H- G	0 / 205	-18.5	-18.5	0.15 (4)	10.00
G- F	0 / 0	-18.5	-18.5	0.11 (4)	10.00

WEBS

MEMB. FR-TO	MAX. FACTORED FORCE (LBS)	MAX CSI (LC)
H- C	0 / 60	0.02 (4)
C- G	-28 / 0	0.02 (1)
G- D	-7 / 48	0.02 (4)
B- H	0 / 217	0.05 (1)
G- E	0 / 223	0.05 (1)

DESIGN CRITERIA

SPECIFIED LOADS:

TOP CH.	LL =	23.3	PSF
	DL =	6.0	PSF
BOT CH.	LL =	0.0	PSF
	DL =	7.4	PSF
TOTAL LOAD	=	36.7	PSF

SPACING = 24.0 IN. C/C

LOADING IN FLAT SECTION BASED ON A SLOPE OF 2.00/12 MINIMUM

THIS TRUSS IS DESIGNED FOR RESIDENTIAL OR SMALL BUILDING REQUIREMENTS OF PART 9, NBCC 2010

THIS DESIGN COMPLIES WITH:
- PART 9 OF OBC 2012 , BCBC 2012 , ABC 2014
- CSA 086-09
- TPIC 2011

(55 % OF 27.2 P.S.F. G.S.L. PLUS 8.4 P.S.F. RAIN LOAD) EQUALS 23.3 P.S.F. SPECIFIED ROOF LIVE LOAD

ALLOWABLE DEFL.(LL)= L/360 (0.40")
CALCULATED VERT. DEFL.(LL) = L/ 999 (0.00")
ALLOWABLE DEFL.(TL)= L/360 (0.40")
CALCULATED VERT. DEFL.(TL) = L/ 999 (0.03")

CSI: TC=0.34/1.00 (B-C:1) , BC=0.15/1.00 (G-H:4) , WB=0.05/1.00 (E-G:1) , SSI=0.11/1.00 (B-C:1)

DOL LUMBER=1.00 NAIL=1.00 LS BEND=1.10 COMP=1.10 SHEAR=1.10 TENS= 1.10

COMPANION LIVE LOAD FACTOR = 0.50

TRUSS PLATE MANUFACTURER IS NOT RESPONSIBLE FOR QUALITY CONTROL IN THE TRUSS MANUFACTURING PLANT .

NAIL VALUES

PLATE	GRIP(DRY) (PSI) MAX	MIN	SHEAR (PLI) MAX	MIN	SECTION (PLI) MAX	MIN
MT20	618	354	1667	788	1987	1656

PLATE PLACEMENT TOL. = 0.250 inches

PLATE ROTATION TOL. = 5.0 Deg.

JSI GRIP= 0.45 (D) (INPUT = 0.80)
JSI METAL= 0.20 (B) (INPUT = 1.00)

JOB NAME	TRUSS NAME	QUANTITY	PLY	JOB DESC.	DRWG NO.
313991	H38		1	TRUSS DESC. JT-39002	E-19112526

Alpa Roof Truss, Maple

Version 8.300 S Aug 9 2019 MiTek Industries, Inc. Fri Nov 8 13:11:37 2019 Page 1

ID:VRLqmclDiftZCj2mk6F92VyQuye-N4eAFTPb2GQYc_fJVDDKobiLPctqR3MvbZ06iEyLFGa

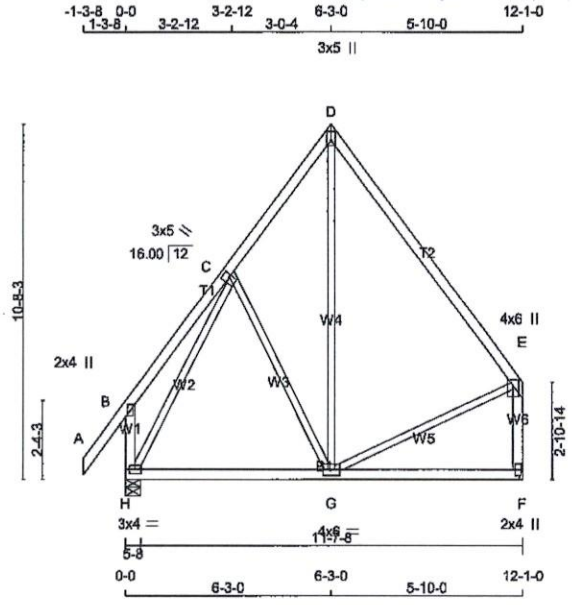

TOTAL WEIGHT = 69 lb

[M][F]

LUMBER

N. L. G. A. RULES

CHORDS	SIZE		LUMBER	DESCR.
A - D	2x4	DRY	No.2	SPF
D - E	2x4	DRY	2100F 1.8E	SPF
H - B	2x4	DRY	No.2	SPF
F - E	2x4	DRY	No.2	SPF
H - F	2x4	DRY	No.2	SPF
ALL WEBS EXCEPT	2x3	DRY	No.2	SPF

DRY: SEASONED LUMBER.

PLATES (table is in inches)

JT	TYPE	PLATES	W	LEN	Y	X
B	TMV+p	MT20	2.0	4.0		
C	TMWW+t	MT20	3.0	5.0	2.25	0.75
D	TTW+p	MT20	3.0	5.0	2.00	Edge
E	TMVW+p	MT20	4.0	6.0	2.00	2.00
F	BMV1+p	MT20	2.0	4.0		
G	BMWWW-t	MT20	4.0	6.0		
H	BMVW1-t	MT20	3.0	4.0		

Edge - INDICATES REFERENCE CORNER OF PLATE TOUCHES EDGE OF CHORD.

NOTE: Lateral brace(s) shown shall be 2x4 SPF #2

DIMENSIONS, SUPPORTS AND LOADINGS SPECIFIED BY FABRICATOR TO BE VERIFIED BY BUILDING DESIGNER

BEARINGS

JT	FACTORED GROSS REACTION VERT	HORZ	MAXIMUM FACTORED GROSS REACTION DOWN	HORZ	UPLIFT	INPUT BRG IN-SX	REQRD BRG IN-SX
F	624	0	624	0	0	MECHANICAL	
H	744	0	744	0	0	5-8	1-8

A SUITABLE HANGER/MECHANICAL CONNECTION IS REQUIRED AT JOINT F. MINIMUM BEARING LENGTH AT JOINT F = 1-8.

UNFACTORED REACTIONS

JT	1ST LCASE COMBINED	MAX./MIN. COMPONENT REACTIONS SNOW	LIVE	PERM.LIVE	WIND	DEAD	SOIL
F	443	281 / 0	0 / 0	0 / 0	0 / 0	162 / 0	0 / 0
H	526	347 / 0	0 / 0	0 / 0	0 / 0	179 / 0	0 / 0

BEARING MATERIAL TO BE SPF NO.2 OR BETTER AT JOINT(S) H

BRACING

TOP CHORD TO BE SHEATHED OR MAX. PURLIN SPACING = 6.25 FT.
MAX. UNBRACED BOTTOM CHORD LENGTH = 10.00 FT OR RIGID CEILING DIRECTLY APPLIED.

ALL PITCH BREAKS AND PERIMETER CORNER JOINTS MUST BE LATERALLY RESTRAINED.

LOADING

TOTAL LOAD CASES: (4)

CHORDS

MEMB. FR-TO	MAX. FACTORED FORCE (LBS)	FACTORED VERT. LOAD LC1 (PLF) FROM	TO	MAX CSI (LC)	MAX. UNBRAC LENGTH
A- B	0 / 48	-84.9	-84.9	0.12 (1)	10.00
B- C	0 / 25	-84.9	-84.9	0.14 (1)	10.00
C- D	-342 / 0	-84.9	-84.9	0.10 (1)	6.25
D- E	-318 / 0	-84.9	-84.9	0.25 (1)	6.25
H- B	-218 / 0	0.0	0.0	0.03 (1)	7.81
F- E	-584 / 0	0.0	0.0	0.09 (1)	7.81
H- G	0 / 244	-18.5	-18.5	0.21 (4)	10.00
G- F	0 / 0	-18.5	-18.5	0.19 (4)	10.00

WEBS

MEMB. FR-TO	MAX. FACTORED FORCE (LBS)	MAX CSI (LC)
C- G	-113 / 0	0.10 (1)
G- D	0 / 156	0.05 (4)
H- C	-540 / 0	0.46 (1)
G- E	0 / 208	0.05 (1)

DESIGN CRITERIA

SPECIFIED LOADS:

TOP CH.	LL	=	23.3	PSF
	DL	=	6.0	PSF
BOT CH.	LL	=	0.0	PSF
	DL	=	7.4	PSF
TOTAL LOAD		=	36.7	PSF

SPACING = 24.0 IN. C/C

THIS TRUSS IS DESIGNED FOR RESIDENTIAL OR SMALL BUILDING REQUIREMENTS OF PART 9, NBCC 2010

THIS DESIGN COMPLIES WITH:
- PART 9 OF OBC 2012 , BCBC 2012 , ABC 2014
- CSA 086-09
- TPIC 2011

(55 % OF 27.2 P.S.F. G.S.L. PLUS 8.4 P.S.F. RAIN LOAD) EQUALS 23.3 P.S.F. SPECIFIED ROOF LIVE LOAD

ALLOWABLE DEFL.(LL)= L/360 (0.40")
CALCULATED VERT. DEFL.(LL) = L/ 999 (0.01")
ALLOWABLE DEFL.(TL)= L/360 (0.40")
CALCULATED VERT. DEFL.(TL) = L/ 999 (0.04")

CSI: TC=0.25/1.00 (D-E:1) , BC=0.21/1.00 (G-H:4) , WB=0.46/1.00 (C-H:1) , SSI=0.12/1.00 (D-E:1)

DOL LUMBER=1.00 NAIL=1.00 LS BEND=1.10 COMP=1.10 SHEAR=1.10 TENS= 1.10

COMPANION LIVE LOAD FACTOR = 0.50

TRUSS PLATE MANUFACTURER IS NOT RESPONSIBLE FOR QUALITY CONTROL IN THE TRUSS MANUFACTURING PLANT .

NAIL VALUES

PLATE	GRIP(DRY) (PSI) MAX	MIN	SHEAR (PLI) MAX	MIN	SECTION (PLI) MAX	MIN
MT20	618	354	1667	788	1987	1656

PLATE PLACEMENT TOL. = 0.250 inches

PLATE ROTATION TOL. = 5.0 Deg.

JSI GRIP= 0.73 (C) (INPUT = 0.90)
JSI METAL= 0.34 (C) (INPUT = 1.00)

JOB NAME	TRUSS NAME	QUANTITY	PLY	JOB DESC. / TRUSS DESC.	DRWG NO.
313991	H39T	1	1	JT-39002	E-19112527

Alpa Roof Truss, Maple

Version 6.300 S Aug 9 2019 MiTek Industries, Inc. Fri Nov 8 13:11:42 2019 Page 1
ID:VRLqmcIDifIZCj2mk6F92VyQuye-k2S3IBTktp2rjIXGImoVVePBmdcl6Q6elqjtNRyLFGV

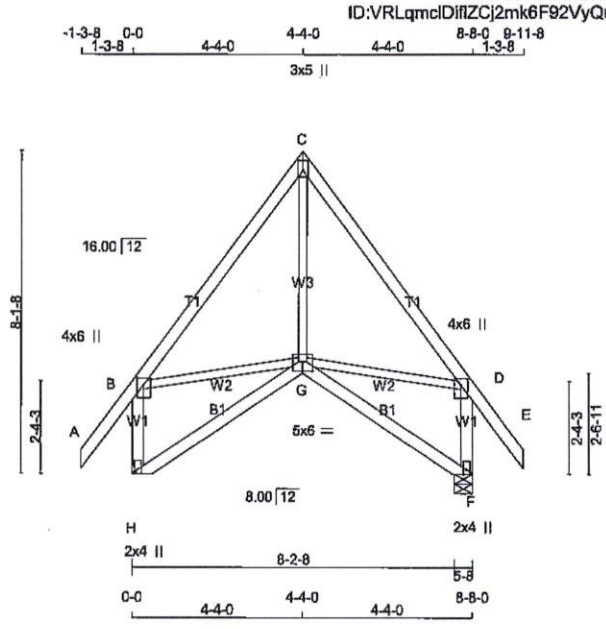

TOTAL WEIGHT = 2 X 50 = 99 lb

[M][F]

LUMBER

N. L. G. A. RULES

CHORDS	SIZE		LUMBER	DESCR.
A - C	2x4	DRY	No.2	SPF
C - E	2x4	DRY	No.2	SPF
H - B	2x4	DRY	No.2	SPF
F - D	2x4	DRY	No.2	SPF
H - G	2x4	DRY	No.2	SPF
G - F	2x4	DRY	No.2	SPF
ALL WEBS EXCEPT	2x3	DRY	No.2	SPF

DRY: SEASONED LUMBER.

PLATES (table is in inches)

JT	TYPE	PLATES	W	LEN	Y	X
B	TMVW+p	MT20	4.0	6.0	2.00	2.00
C	TTW+p	MT20	3.0	5.0	2.00	Edge
D	TMVW+p	MT20	4.0	6.0	2.00	2.00
F	BMV1+p	MT20	2.0	4.0	Edge	
G	BBWWW-p	MT20	5.0	6.0	2.75	3.00
H	BMV1+p	MT20	2.0	4.0	Edge	

Edge - INDICATES REFERENCE CORNER OF PLATE TOUCHES EDGE OF CHORD.

NOTE: Lateral brace(s) shown shall be 2x4 SPF #2

LICENSED PROFESSIONAL ENGINEER
11/08/2019
R. TURENNE
100157040
PROVINCE OF ONTARIO

DIMENSIONS, SUPPORTS AND LOADINGS SPECIFIED BY FABRICATOR TO BE VERIFIED BY BUILDING DESIGNER

BEARINGS

JT	FACTORED GROSS REACTION VERT	HORZ	MAXIMUM FACTORED GROSS REACTION DOWN	HORZ	UPLIFT	INPUT BRG IN-SX	REQRD BRG IN-SX
H	567	0	567	0	0	MECHANICAL	
F	567	0	567	0	0	5-8	1-8

A SUITABLE HANGER/MECHANICAL CONNECTION IS REQUIRED AT JOINT H. MINIMUM BEARING LENGTH AT JOINT H = 1-8.

UNFACTORED REACTIONS

JT	1ST LCASE COMBINED	MAX./MIN. COMPONENT REACTIONS SNOW	LIVE	PERM.LIVE	WIND	DEAD	SOIL
H	400	267 / 0	0 / 0	0 / 0	0 / 0	133 / 0	0 / 0
F	400	267 / 0	0 / 0	0 / 0	0 / 0	133 / 0	0 / 0

BEARING MATERIAL TO BE SPF NO.2 OR BETTER AT JOINT(S) F

BRACING

TOP CHORD TO BE SHEATHED OR MAX. PURLIN SPACING = 6.25 FT.
MAX. UNBRACED BOTTOM CHORD LENGTH = 10.00 FT OR RIGID CEILING DIRECTLY APPLIED.

ALL PITCH BREAKS AND PERIMETER CORNER JOINTS MUST BE LATERALLY RESTRAINED.

LOADING

TOTAL LOAD CASES: (4)

CHORDS

MEMB. FR-TO	MAX. FACTORED FORCE (LBS)	FACTORED VERT. LOAD LC1 (PLF) FROM	TO	MAX CSI (LC)	MAX. UNBRAC LENGTH
A- B	0 / 48	-84.9	-84.9	0.12 (1)	10.00
B- C	-314 / 0	-84.9	-84.9	0.21 (1)	6.25
C- D	-314 / 0	-84.9	-84.9	0.21 (1)	6.25
D- E	0 / 48	-84.9	-84.9	0.12 (1)	10.00
H- B	-527 / 0	0.0	0.0	0.07 (1)	7.81
F- D	-527 / 0	0.0	0.0	0.07 (1)	7.81
H- G	0 / 0	-18.5	-18.5	0.10 (4)	10.00
G- F	0 / 0	-18.5	-18.5	0.10 (4)	10.00

WEBS

MEMB. FR-TO	MAX. FACTORED FORCE (LBS)	MAX CSI (LC)
G- C	0 / 134	0.04 (4)
B- G	0 / 190	0.04 (1)
G- D	0 / 190	0.04 (1)

DESIGN CRITERIA

SPECIFIED LOADS:

TOP CH.	LL	=	23.3	PSF
	DL	=	6.0	PSF
BOT CH.	LL	=	0.0	PSF
	DL	=	7.4	PSF
TOTAL LOAD		=	36.7	PSF

SPACING = 24.0 IN. C/C

THIS TRUSS IS DESIGNED FOR RESIDENTIAL OR SMALL BUILDING REQUIREMENTS OF PART 9, NBCC 2010

THIS DESIGN COMPLIES WITH:
- PART 9 OF OBC 2012 , BCBC 2012 , ABC 2014
- CSA 086-09
- TPIC 2011

(55 % OF 27.2 P.S.F. G.S.L. PLUS 8.4 P.S.F. RAIN LOAD) EQUALS 23.3 P.S.F. SPECIFIED ROOF LIVE LOAD

ALLOWABLE DEFL.(LL)= L/360 (0.29")
CALCULATED VERT. DEFL.(LL) = L/ 999 (0.00")
ALLOWABLE DEFL.(TL)= L/360 (0.29")
CALCULATED VERT. DEFL.(TL) = L/ 999 (0.02")

CSI: TC=0.21/1.00 (B-C:1) , BC=0.10/1.00 (F-G:4) , WB=0.04/1.00 (B-G:1) , SSI=0.09/1.00 (B-C:1)

DOL LUMBER=1.00 NAIL=1.00 LS BEND=1.10 COMP=1.10 SHEAR=1.10 TENS= 1.10

COMPANION LIVE LOAD FACTOR = 0.50

TRUSS PLATE MANUFACTURER IS NOT RESPONSIBLE FOR QUALITY CONTROL IN THE TRUSS MANUFACTURING PLANT .

NAIL VALUES

PLATE	GRIP(DRY) (PSI) MAX	MIN	SHEAR (PLI) MAX	MIN	SECTION (PLI) MAX	MIN
MT20	618	354	1667	788	1987	1656

PLATE PLACEMENT TOL. = 0.250 inches

PLATE ROTATION TOL. = 5.0 Deg.

JSI GRIP= 0.67 (H) (INPUT = 0.80)
JSI METAL= 0.26 (H) (INPUT = 1.00)

JOB NAME	TRUSS NAME	QUANTITY	PLY	JOB DESC.	DRWG NO.
313991	H39TG		1	TRUSS DESC. JT-39002	E-19112528

Alpa Roof Truss, Maple

Version 8.300 S Aug 9 2019 MiTek Industries, Inc. Fri Nov 8 13:11:46 2019 Page 1

ID:VRLqmcIDiflZCj2mk6F92VyQuye-cpha8YWFx1ZHBMr1XctRfUashEzh2DAEgSh5WDyLFGR

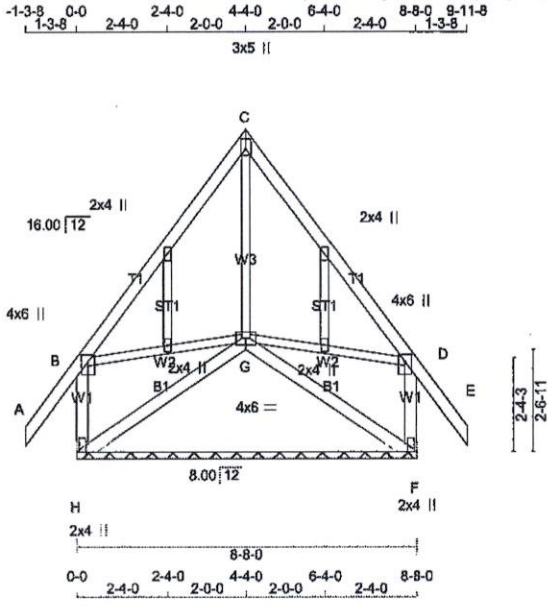

TOTAL WEIGHT = 54 lb

[M]

LUMBER

N. L. G. A. RULES

CHORDS	SIZE		LUMBER	DESCR.
A - C	2x4	DRY	No.2	SPF
C - E	2x4	DRY	No.2	SPF
H - B	2x4	DRY	No.2	SPF
F - D	2x4	DRY	No.2	SPF
H - G	2x4	DRY	No.2	SPF
G - F	2x4	DRY	No.2	SPF
ALL WEBS EXCEPT	2x3	DRY	No.2	SPF
ALL GABLE WEBS	2x3	DRY	No.2	SPF

DRY: SEASONED LUMBER.

GABLE STUDS SPACED AT 2-0-0 OC.

PLATES (table is in inches)

JT	TYPE	PLATES	W	LEN	Y	X
B	TMVW+p	MT20	4.0	6.0	2.00	2.00
C	TTW+p	MT20	3.0	5.0	2.00	Edge
D	TMVW+p	MT20	4.0	6.0	2.00	2.00
F	BMV1+p	MT20	2.0	4.0	Edge	
G	BBWWW1-p	MT20	4.0	6.0		
H	BMV1+p	MT20	2.0	4.0	Edge	
I, J, K, L						
I	NP+w	MT20	2.0	4.0		

Edge - INDICATES REFERENCE CORNER OF PLATE TOUCHES EDGE OF CHORD.

NOTE: Lateral brace(s) shown shall be 2x4 SPF #2

LICENSED PROFESSIONAL ENGINEER
11/08/2019
R. TURBINE
100157040
PROVINCE OF ONTARIO

DIMENSIONS, SUPPORTS AND LOADINGS SPECIFIED BY FABRICATOR TO BE VERIFIED BY BUILDING DESIGNER

BEARINGS

JT	FACTORED GROSS REACTION VERT	HORZ	MAXIMUM FACTORED GROSS REACTION DOWN	HORZ	UPLIFT	INPUT BRG IN-SX	REQRD BRG IN-SX
H	402	0	402	0	0	8-8-0 (7-8-0)	4-14
G	331	0	331	0	0	8-8-0 (7-8-0)	4-14
F	402	0	402	0	0	8-8-0 (7-8-0)	4-14

VALUE IN PARENTHESIS INDICATES EFFECTIVE BEARING LENGTH

UNFACTORED REACTIONS

JT	1ST LCASE COMBINED	MAX./MIN. COMPONENT REACTIONS SNOW	LIVE	PERM.LIVE	WIND	DEAD	SOIL
H	282	199 / 0	0 / 0	0 / 0	0 / 0	83 / 0	0 / 0
G	237	137 / 0	0 / 0	0 / 0	0 / 0	100 / 0	0 / 0
F	282	199 / 0	0 / 0	0 / 0	0 / 0	83 / 0	0 / 0

BEARING MATERIAL TO BE SPF NO.2 OR BETTER AT JOINT(S) H, G, F

BRACING

TOP CHORD TO BE SHEATHED OR MAX. PURLIN SPACING = 6.25 FT.
MAX. UNBRACED BOTTOM CHORD LENGTH = 10.00 FT OR RIGID CEILING DIRECTLY APPLIED.

ALL PITCH BREAKS AND PERIMETER CORNER JOINTS MUST BE LATERALLY RESTRAINED.

LOADING

TOTAL LOAD CASES: (4)

CHORDS

MEMB. FR-TO	MAX. FACTORED FORCE (LBS)	FACTORED VERT. LOAD (PLF) FROM	TO	LC1 MAX CSI (LC)	MAX. UNBRAC LENGTH
A- B	0 / 48	-84.9	-84.9	0.12 (1)	10.00
B- C	-82 / 0	-84.9	-84.9	0.27 (1)	6.25
C- D	-82 / 0	-84.9	-84.9	0.27 (1)	6.25
D- E	0 / 48	-84.9	-84.9	0.12 (1)	10.00
H- B	-362 / 0	0.0	0.0	0.05 (1)	7.81
F- D	-362 / 0	0.0	0.0	0.05 (1)	7.81
H- G	0 / 0	-18.5	-18.5	0.10 (4)	10.00
G- F	0 / 0	-18.5	-18.5	0.10 (4)	10.00

WEBS

MEMB. FR-TO	MAX. FACTORED FORCE (LBS)	MAX CSI (LC)
G- C	-236 / 0	0.10 (1)
B- G	0 / 50	0.01 (1)
G- D	0 / 50	0.01 (1)

DESIGN CRITERIA

SPECIFIED LOADS:

TOP CH.	LL	=	23.3	PSF
	DL	=	6.0	PSF
BOT CH.	LL	=	0.0	PSF
	DL	=	7.4	PSF
TOTAL LOAD		=	36.7	PSF

SPACING = 24.0 IN. C/C

THIS TRUSS IS DESIGNED FOR RESIDENTIAL OR SMALL BUILDING REQUIREMENTS OF PART 9, NBCC 2010

THIS DESIGN COMPLIES WITH:
- PART 9 OF OBC 2012 , BCBC 2012 , ABC 2014
- CSA 086-09
- TPIC 2011

(55 % OF 27.2 P.S.F. G.S.L. PLUS 8.4 P.S.F. RAIN LOAD) EQUALS 23.3 P.S.F. SPECIFIED ROOF LIVE LOAD

CSI: TC=0.27/1.00 (B-C:1) , BC=0.10/1.00 (F-G:4) , WB=0.10/1.00 (C-G:1) , SSI=0.09/1.00 (B-C:1)

DOL LUMBER=1.00 NAIL=1.00 LS BEND=1.10 COMP=1.10 SHEAR=1.10 TENS= 1.10

COMPANION LIVE LOAD FACTOR = 0.50

TRUSS PLATE MANUFACTURER IS NOT RESPONSIBLE FOR QUALITY CONTROL IN THE TRUSS MANUFACTURING PLANT .

NAIL VALUES

PLATE	GRIP(DRY) (PSI) MAX	MIN	SHEAR (PLI) MAX	MIN	SECTION (PLI) MAX	MIN
MT20	618	354	1667	788	1987	1656

PLATE PLACEMENT TOL. = 0.250 Inches

PLATE ROTATION TOL. = 5.0 Deg.

JSI GRIP= 0.46 (H) (INPUT = 0.90)
JSI METAL= 0.18 (F) (INPUT = 1.00)

JOB NAME	TRUSS NAME	QUANTITY	PLY	JOB DESC. / TRUSS DESC.	DRWG NO.
313991	H40		1	JT-39002	E-19112529

Alpa Roof Truss, Maple

Version 8.300 S Aug 9 2019 MiTek Industries, Inc. Fri Nov 8 12:59:16 2019 Page 1
ID:VRLqmcIDiflZC|2mk6F92VyQuye-aXN2k5RoZb3hD6Vub5QZGKWX_vrBKqArCm0OChyLFS9

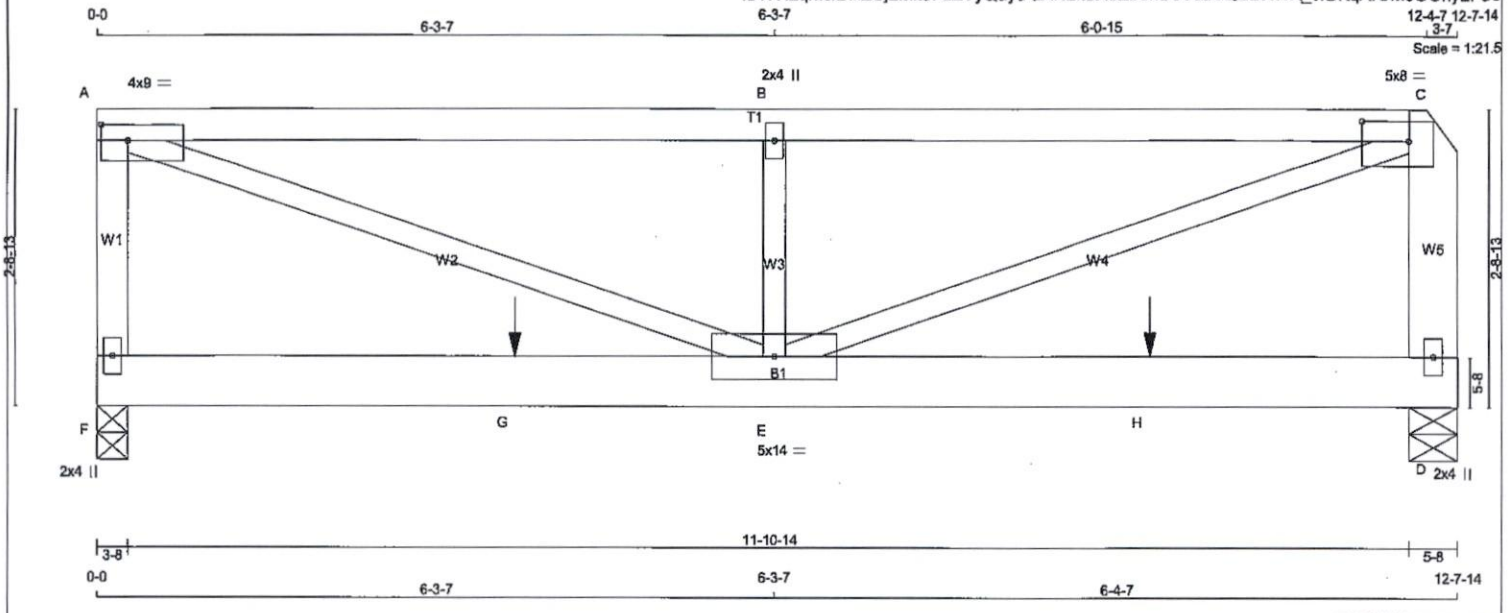

TOTAL WEIGHT = 55 lb [M]

LUMBER
N. L. G. A. RULES

CHORDS	SIZE		LUMBER	DESCR.
F - A	2x4	DRY	No.2	SPF
A - C	2x4	DRY	2100F 1.8E	SPF
F - D	2x6	DRY	No.2	SPF
ALL WEBS EXCEPT	2x3	DRY	No.2	SPF
D - C	2x6	DRY	No.2	SPF

DRY: SEASONED LUMBER.

PLATES (table is in inches)

JT	TYPE	PLATES	W	LEN	Y	X
A	TMVW-t	MT20	4.0	9.0	1.75	3.00
B	TMW+w	MT20	2.0	4.0		
C	TWMW*-I	MT20	5.0	8.0	2.25	5.25
D	BMW1+w	MT20	2.0	4.0		
E	BMWWW-t	MT20	5.0	14.0		
F	BMV1+p	MT20	2.0	4.0		

NOTE: Lateral brace(s) shown shall be 2x4 SPF #2

LICENSED PROFESSIONAL ENGINEER
11/08/2019
R. TURENNE
100157040
PROVINCE OF ONTARIO

DIMENSIONS, SUPPORTS AND LOADINGS SPECIFIED BY FABRICATOR TO BE VERIFIED BY BUILDING DESIGNER

BEARINGS

JT	FACTORED GROSS REACTION VERT	HORZ	MAXIMUM FACTORED GROSS REACTION DOWN	HORZ	UPLIFT	INPUT BRG IN-SX	REQRD BRG IN-SX
F	1966	0	1966	0	0	3-8	2-14
D	2119	0	2119	0	0	5-8	2-5

UNFACTORED REACTIONS

JT	1ST LCASE COMBINED	MAX./MIN. COMPONENT REACTIONS SNOW	LIVE	PERM.LIVE	WIND	DEAD	SOIL
F	1396	886 / 0	0 / 0	0 / 0	0 / 0	510 / 0	0 / 0
D	1504	955 / 0	0 / 0	0 / 0	0 / 0	549 / 0	0 / 0

BEARING MATERIAL TO BE SPF NO.2 OR BETTER AT JOINT(S) F, D

BRACING
TOP CHORD TO BE SHEATHED OR MAX. PURLIN SPACING = 3.33 FT.
MAX. UNBRACED BOTTOM CHORD LENGTH = 10.00 FT OR RIGID CEILING DIRECTLY APPLIED.

ALL PITCH BREAKS AND PERIMETER CORNER JOINTS MUST BE LATERALLY RESTRAINED.

LOADING
TOTAL LOAD CASES: (4)

CHORDS

MEMB. FR-TO	MAX. FACTORED FORCE (LBS)	FACTORED VERT. LOAD (PLF) FROM	TO	LC1 MAX CSI (LC)	MAX. UNBRAC LENGTH
F- A	-1674 / 0	0.0	0.0	0.23 (1)	6.37
A- B	-3361 / 0	-167.1	-167.1	0.91 (1)	3.33
B- C	-3361 / 0	-167.1	-167.1	0.90 (1)	3.33
F- G	0 / 0	-36.4	-36.4	0.63 (1)	10.00
G- E	0 / 0	-36.4	-36.4	0.63 (1)	10.00
E- H	0 / 0	-36.4	-36.4	0.74 (1)	10.00
H- D	0 / 0	-36.4	-36.4	0.74 (1)	10.00

WEBS

MEMB. FR-TO	MAX. FACTORED FORCE (LBS)	MAX CSI (LC)
A- E	0 / 3589	0.89 (1)
E- B	-1265 / 0	0.22 (1)
E- C	0 / 3600	0.89 (1)
D- C	-1689 / 0	0.14 (1)

FACTORED CONCENTRATED LOADS (LBS)

JT	LOC.	LC1	MAX-	MAX+	FACE	DIR.	TYPE	HEEL	CONN.
G	3-10-7	-778	-778	---	FRONT	VERT	TOTAL	—	C1
H	9-9-5	-778	-778	---	FRONT	VERT	TOTAL	—	C1

CONNECTION REQUIREMENTS

1) **C1:** A SUITABLE HANGER/MECHANICAL CONNECTION IS REQUIRED.

DESIGN CRITERIA

*** SPECIAL LOADS ANALYSIS ***
GEOMETRY AND/OR BASIC LOADS CHANGED BY USER.
LOADS WERE DERIVED FROM USER INPUT
NO FURTHER MODIFICATIONS WERE MADE

SPECIFIED LOADS:

TOP	CH.	LL	=	23.3	PSF
		DL	=	6.0	PSF
BOT	CH.	LL	=	0.0	PSF
		DL	=	7.4	PSF
TOTAL	LOAD		=	36.7	PSF

SPACING = 24.0 IN. C/C

LOADING IN FLAT SECTION BASED ON A SLOPE OF 2.00/12 MINIMUM

GIRDER TYPE: CPrimeHip
SIDE SETBACK = 0-0
END SETBACK = 5-10-8
END WALL WIDTH = 0-0
CORNER FRAMING TYPE: CONVENTIONAL
END JACK TYPE: CONVENTIONAL
APPLIED TO FRONT SIDE
- ADDT'L LOADS BASED ON 55 % OF GSL.

*** NON STANDARD GIRDER ***
ADDT'L USER-DEFINED LOADS APPLIED TO ALL LOAD CASES.

THIS TRUSS IS DESIGNED FOR RESIDENTIAL OR SMALL BUILDING REQUIREMENTS OF PART 9, NBCC 2010

THIS DESIGN COMPLIES WITH:
- PART 9 OF OBC 2012 , BCBC 2012 , ABC 2014
- CSA 086-09
- TPIC 2011

(55 % OF 27.2 P.S.F. G.S.L. PLUS 8.4 P.S.F. RAIN LOAD) EQUALS 23.3 P.S.F. SPECIFIED ROOF LIVE LOAD

ALLOWABLE DEFL.(LL)= L/360 (0.41")
CALCULATED VERT. DEFL.(LL) = L/ 999 (0.12")
ALLOWABLE DEFL.(TL)= L/360 (0.41")
CALCULATED VERT. DEFL.(TL) = L/ 609 (0.24")

CSI: TC=0.91/1.00 (A-B:1) , BC=0.74/1.00 (D-E:1) , WB=0.89/1.00 (C-E:1) , SSI=0.55/1.00 (A-B:1)

DOL LUMBER=1.00 NAIL=1.00 LS BEND=1.00 COMP=1.00 SHEAR=1.00 TENS= 1.00

COMPANION LIVE LOAD FACTOR = 0.50

TRUSS PLATE MANUFACTURER IS NOT RESPONSIBLE FOR QUALITY CONTROL IN THE TRUSS MANUFACTURING PLANT .

NAIL VALUES

PLATE	GRIP(DRY) (PSI) MAX	MIN	SHEAR (PLI) MAX	MIN	SECTION (PLI) MAX	MIN
MT20	618	354	1667	788	1987	1656

CONTINUED ON PAGE 2

JOB NAME	TRUSS NAME	QUANTITY	PLY	JOB DESC.	DRWG NO.
313991	H41T		1	TRUSS DESC. JT-39002	E-19112530

Alpa Roof Truss, Maple

ID:VRLqmclDiflZCj2mk6F92VyQuye-ZTLI72k9StyazHoh85juwVs9pvT1?q811vobhcyLFG8

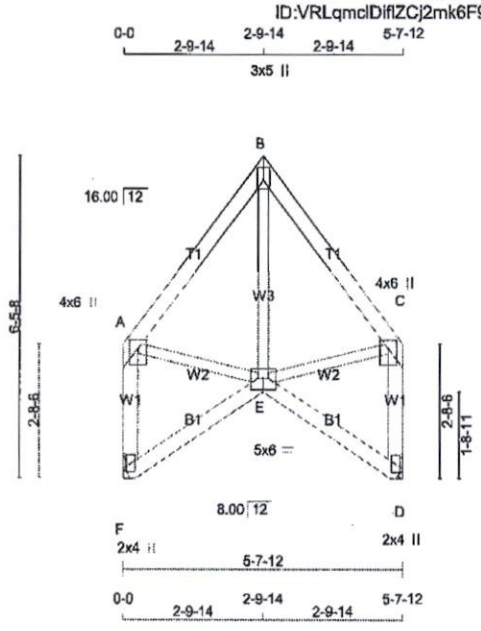

TOTAL WEIGHT = 2 X 32 = 65 lb

[M][F]

LUMBER

N. L. G. A. RULES

CHORDS	SIZE		LUMBER	DESCR.
A - B	2x4	DRY	No.2	SPF
B - C	2x4	DRY	No.2	SPF
F - A	2x4	DRY	No.2	SPF
D - C	2x4	DRY	No.2	SPF
F - E	2x4	DRY	No.2	SPF
E - D	2x4	DRY	No.2	SPF
ALL WEBS EXCEPT	2x3	DRY	No.2	SPF

DRY: SEASONED LUMBER.

PLATES (table is in inches)

JT	TYPE	PLATES	W	LEN	Y	X
A	TMVW+p	MT20	4.0	6.0	2.00	2.00
B	TTW+p	MT20	3.0	5.0	2.00	Edge
C	TMVW+p	MT20	4.0	6.0	2.00	2.00
D	BMV1+p	MT20	2.0	4.0		
E	BBWWW-p	MT20	5.0	6.0	2.75	3.00
F	BMV1+p	MT20	2.0	4.0		

Edge - INDICATES REFERENCE CORNER OF PLATE TOUCHES EDGE OF CHORD.

NOTE: Lateral brace(s) shown shall be 2x4 SPF #2

DIMENSIONS, SUPPORTS AND LOADINGS SPECIFIED BY FABRICATOR TO BE VERIFIED BY BUILDING DESIGNER

BEARINGS

JT	FACTORED GROSS REACTION VERT	HORZ	MAXIMUM FACTORED GROSS REACTION DOWN	HORZ	UPLIFT	INPUT BRG IN-SX	REQRD BRG IN-SX
F	292	0	292	0	0	MECHANICAL	
D	292	0	292	0	0	MECHANICAL	

A SUITABLE HANGER/MECHANICAL CONNECTION IS REQUIRED AT JOINT F, D. MINIMUM BEARING LENGTH AT JOINT F = 1-8, JOINT D = 1-8.

UNFACTORED REACTIONS

JT	1ST LCASE COMBINED	MAX./MIN. COMPONENT REACTIONS SNOW	LIVE	PERM.LIVE	WIND	DEAD	SOIL
F	207	131 / 0	0 / 0	0 / 0	0 / 0	76 / 0	0 / 0
D	207	131 / 0	0 / 0	0 / 0	0 / 0	76 / 0	0 / 0

BRACING

TOP CHORD TO BE SHEATHED OR MAX. PURLIN SPACING = 6.25 FT.
MAX. UNBRACED BOTTOM CHORD LENGTH = 10.00 FT OR RIGID CEILING DIRECTLY APPLIED.

ALL PITCH BREAKS AND PERIMETER CORNER JOINTS MUST BE LATERALLY RESTRAINED.

LOADING

TOTAL LOAD CASES: (4)

CHORDS

MEMB. FR-TO	MAX. FACTORED FORCE (LBS)	FACTORED VERT. LOAD (PLF) FROM	TO	LC1 MAX CSI (LC)	MAX. UNBRAC LENGTH
A- B	-159 / 0	-84.9	-84.9	0.09 (1)	6.25
B- C	-159 / 0	-84.9	-84.9	0.09 (1)	6.25
F- A	-266 / 0	0.0	0.0	0.04 (1)	7.81
D- C	-266 / 0	0.0	0.0	0.04 (1)	7.81
F- E	0 / 0	-18.5	-18.5	0.04 (4)	10.00
E- D	0 / 0	-18.5	-18.5	0.04 (4)	10.00

WEBS

MEMB. FR-TO	MAX. FACTORED FORCE (LBS)	MAX CSI (LC)
E- B	0 / 45	0.02 (4)
A- E	0 / 97	0.02 (1)
E- C	0 / 97	0.02 (1)

DESIGN CRITERIA

SPECIFIED LOADS:

TOP CH.	LL =	23.3	PSF
	DL =	6.0	PSF
BOT CH.	LL =	0.0	PSF
	DL =	7.4	PSF
TOTAL LOAD	=	36.7	PSF

SPACING = 24.0 IN. C/C

THIS TRUSS IS DESIGNED FOR RESIDENTIAL OR SMALL BUILDING REQUIREMENTS OF PART 9, NBCC 2010

THIS DESIGN COMPLIES WITH:
- PART 9 OF OBC 2012 , BCBC 2012 , ABC 2014
- CSA 086-09
- TPIC 2011

(55 % OF 27.2 P.S.F. G.S.L. PLUS 8.4 P.S.F. RAIN LOAD) EQUALS 23.3 P.S.F. SPECIFIED ROOF LIVE LOAD

ALLOWABLE DEFL.(LL)= L/360 (0.19")
CALCULATED VERT. DEFL.(LL) = L/ 999 (0.00")
ALLOWABLE DEFL.(TL)= L/360 (0.19")
CALCULATED VERT. DEFL.(TL) = L/ 999 (0.00")

CSI: TC=0.09/1.00 (A-B:1) , BC=0.04/1.00 (D-E:4) , WB=0.02/1.00 (A-E:1) , SSI=0.06/1.00 (A-B:1)

DOL LUMBER=1.00 NAIL=1.00 LS BEND=1.10 COMP=1.10 SHEAR=1.10 TENS= 1.10

COMPANION LIVE LOAD FACTOR = 0.50

TRUSS PLATE MANUFACTURER IS NOT RESPONSIBLE FOR QUALITY CONTROL IN THE TRUSS MANUFACTURING PLANT .

NAIL VALUES

PLATE	GRIP(DRY) (PSI) MAX	MIN	SHEAR (PLI) MAX	MIN	SECTION (PLI) MAX	MIN
MT20	618	354	1667	788	1987	1656

PLATE PLACEMENT TOL. = 0.250 inches

PLATE ROTATION TOL. = 5.0 Deg.

JSI GRIP= 0.17 (D) (INPUT = 0.90)
JSI METAL= 0.14 (D) (INPUT = 1.00)

JOB NAME	TRUSS NAME	QUANTITY	PLY	JOB DESC.	DRWG NO.
313991	H41TG		1	TRUSS DESC. JT-39002	E-19112531

Alpa Roof Truss, Maple

Version 8.300 S Aug 9 2019 MiTek Industries, Inc. Fri Nov 8 13:12:06 2019 Page 1
ID:VRLqmcIDiflZCj2rnk6F92VyQuye-1fv8LOfoDB4RbRNtipE7TiPK6IpGkH0AGZX8E2yLFG7

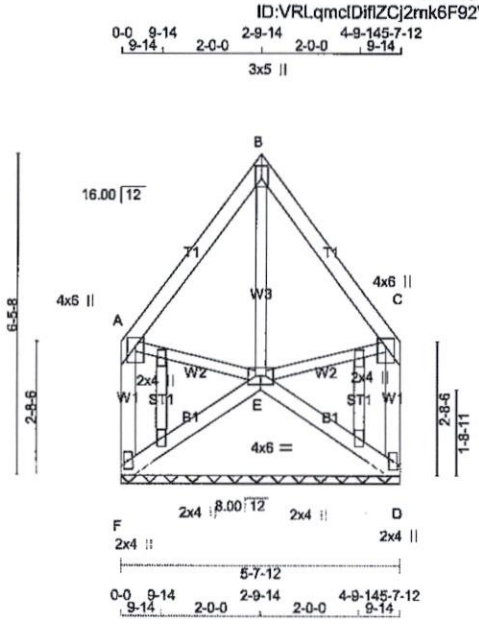

TOTAL WEIGHT = 35 lb
[M]

LUMBER
N. L. G. A. RULES

CHORDS	SIZE		LUMBER	DESCR.
A - B	2x4	DRY	No.2	SPF
B - C	2x4	DRY	No.2	SPF
F - A	2x4	DRY	No.2	SPF
D - C	2x4	DRY	No.2	SPF
F - E	2x4	DRY	No.2	SPF
E - D	2x4	DRY	No.2	SPF
ALL WEBS EXCEPT	2x3	DRY	No.2	SPF
ALL GABLE WEBS	2x3	DRY	No.2	SPF

DRY: SEASONED LUMBER.

GABLE STUDS SPACED AT 2-0-0 OC.

PLATES (table is in inches)

JT	TYPE	PLATES	W	LEN	Y	X
A	TMVW+p	MT20	4.0	6.0	2.00	2.00
B	TTW+p	MT20	3.0	5.0	2.00	Edge
C	TMVW+p	MT20	4.0	6.0	2.00	2.00
D	BMV1+p	MT20	2.0	4.0		
E	BBWWW1-p	MT20	4.0	6.0		
F	BMV1+p	MT20	2.0	4.0		
G, H, I, J						
G	NP+w	MT20	2.0	4.0		

Edge - INDICATES REFERENCE CORNER OF PLATE TOUCHES EDGE OF CHORD.

NOTE: Lateral brace(s) shown shall be 2x4 SPF #2

LICENSED PROFESSIONAL ENGINEER
11/08/2019
R. TURENNE
100157040
PROVINCE OF ONTARIO

DIMENSIONS, SUPPORTS AND LOADINGS SPECIFIED BY FABRICATOR TO BE VERIFIED BY BUILDING DESIGNER

BEARINGS

JT	FACTORED GROSS REACTION VERT	HORZ	MAXIMUM FACTORED GROSS REACTION DOWN	HORZ	UPLIFT	INPUT BRG IN-SX	REQRD BRG IN-SX
F	197	0	197	0	0	5-7-12 (5-2-0)	3-4
E	190	0	190	0	0	5-7-12 (5-2-0)	3-4
D	197	0	197	0	0	5-7-12 (5-2-0)	3-4

VALUE IN PARENTHESIS INDICATES EFFECTIVE BEARING LENGTH

UNFACTORED REACTIONS

JT	1ST LCASE COMBINED	MAX./MIN. COMPONENT REACTIONS SNOW	LIVE	PERM.LIVE	WIND	DEAD	SOIL
F	139	94 / 0	0 / 0	0 / 0	0 / 0	45 / 0	0 / 0
E	137	75 / 0	0 / 0	0 / 0	0 / 0	61 / 0	0 / 0
D	139	94 / 0	0 / 0	0 / 0	0 / 0	45 / 0	0 / 0

BEARING MATERIAL TO BE SPF NO.2 OR BETTER AT JOINT(S) F, E, D

BRACING
TOP CHORD TO BE SHEATHED OR MAX. PURLIN SPACING = 6.25 FT.
MAX. UNBRACED BOTTOM CHORD LENGTH = 10.00 FT OR RIGID CEILING DIRECTLY APPLIED.

ALL PITCH BREAKS AND PERIMETER CORNER JOINTS MUST BE LATERALLY RESTRAINED.

LOADING
TOTAL LOAD CASES: (4)

CHORDS

MEMB. FR-TO	MAX. FACTORED FORCE (LBS)	FACTORED VERT. LOAD (PLF) FROM	TO	LC1 MAX CSI (LC)	MAX. UNBRAC LENGTH
A- B	-56 / 0	-84.9	-84.9	0.12 (1)	6.25
B- C	-56 / 0	-84.9	-84.9	0.12 (1)	6.25
F- A	-171 / 0	0.0	0.0	0.03 (1)	7.81
D- C	-171 / 0	0.0	0.0	0.03 (1)	7.81
F- E	0 / 0	-18.5	-18.5	0.04 (4)	10.00
E- D	0 / 0	-18.5	-18.5	0.04 (4)	10.00

WEBS

MEMB. FR-TO	MAX. FACTORED FORCE (LBS)	MAX CSI (LC)
E- B	-151 / 0	0.05 (1)
A- E	0 / 34	0.01 (1)
E- C	0 / 34	0.01 (1)

DESIGN CRITERIA

SPECIFIED LOADS:

TOP CH.	LL =	23.3	PSF
	DL =	6.0	PSF
BOT CH.	LL =	0.0	PSF
	DL =	7.4	PSF
TOTAL LOAD	=	36.7	PSF

SPACING = 24.0 IN. C/C

THIS TRUSS IS DESIGNED FOR RESIDENTIAL OR SMALL BUILDING REQUIREMENTS OF PART 9, NBCC 2010

THIS DESIGN COMPLIES WITH:
- PART 9 OF OBC 2012 , BCBC 2012 , ABC 2014
- CSA 086-09
- TPIC 2011

(55 % OF 27.2 P.S.F. G.S.L. PLUS 8.4 P.S.F. RAIN LOAD) EQUALS 23.3 P.S.F. SPECIFIED ROOF LIVE LOAD

CSI: TC=0.12/1.00 (A-B:1) , BC=0.04/1.00 (D-E:4) , WB=0.05/1.00 (B-E:1) , SSI=0.06/1.00 (A-B:1)

DOL LUMBER=1.00 NAIL=1.00 LS BEND=1.10 COMP=1.10 SHEAR=1.10 TENS= 1.10

COMPANION LIVE LOAD FACTOR = 0.50

TRUSS PLATE MANUFACTURER IS NOT RESPONSIBLE FOR QUALITY CONTROL IN THE TRUSS MANUFACTURING PLANT .

NAIL VALUES

PLATE	GRIP(DRY) (PSI) MAX	MIN	SHEAR (PLI) MAX	MIN	SECTION (PLI) MAX	MIN
MT20	618	354	1667	788	1987	1656

PLATE PLACEMENT TOL. = 0.250 inches

PLATE ROTATION TOL. = 5.0 Deg.

JSI GRIP= 0.16 (E) (INPUT = 0.90)
JSI METAL= 0.09 (D) (INPUT = 1.00)

JOB NAME	TRUSS NAME	QUANTITY	PLY	JOB DESC. / TRUSS DESC.	DRWG NO.
313991	J01		1	JT-39002	E-19112532

Alpa Roof Truss, Maple

Version 8.300 S Aug 9 2019 MiTek Industries, Inc. Fri Nov 8 13:12:34 2019 Page 1
ID:VRLqmcIDiflZCj2mk6F92VyQuye-C2bjDz5MdncTykWGLhkhccZ02bJmlyeliwJcCRyLFFh

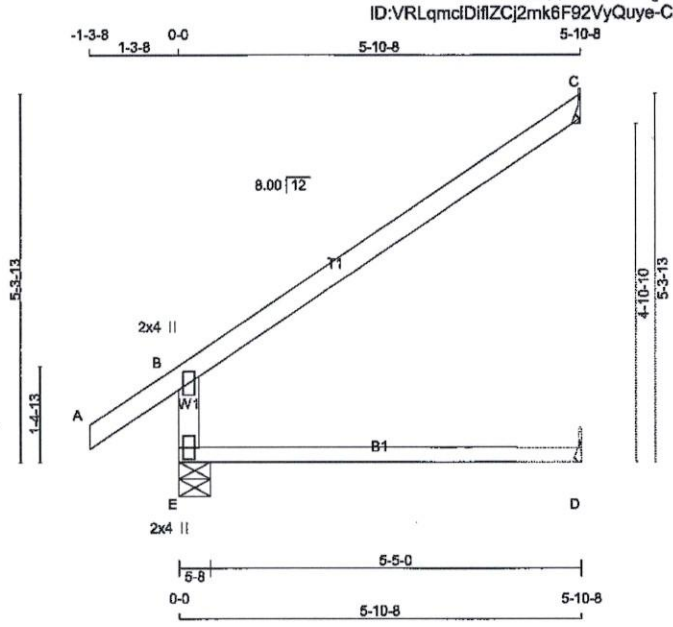

TOTAL WEIGHT = 15 X 16 = 240 lb

LUMBER
N. L. G. A. RULES

CHORDS	SIZE		LUMBER	DESCR.
E - B	2x4	DRY	No.2	SPF
A - C	2x4	DRY	No.2	SPF
E - D	2x3	DRY	No.2	SPF

DRY: SEASONED LUMBER.

PLATES (table is in inches)

JT	TYPE	PLATES	W	LEN	Y	X
B	TMV+p	MT20	2.0	4.0		
E	BMV1+p	MT20	2.0	4.0		

NOTE: Lateral brace(s) shown shall be 2x4 SPF #2

LICENSED PROFESSIONAL ENGINEER
11/08/2019
R. TURENNE
100157040
PROVINCE OF ONTARIO

DIMENSIONS, SUPPORTS AND LOADINGS SPECIFIED BY FABRICATOR TO BE VERIFIED BY BUILDING DESIGNER

BEARINGS

JT	FACTORED GROSS REACTION VERT	HORZ	MAXIMUM FACTORED GROSS REACTION DOWN	HORZ	UPLIFT	INPUT BRG IN-SX	REQRD BRG IN-SX
E	494	0	494	0	0	5-8	1-8
C	187	0	187	0	0	MECHANICAL	
D	43	0	48	0	0	MECHANICAL	

A SUITABLE HANGER/MECHANICAL CONNECTION IS REQUIRED AT JOINT C, D. MINIMUM BEARING LENGTH AT JOINT C = 1-8, JOINT D = 1-8.

BEVELED PLATE OR SHIM REQUIRED TO PROVIDE FULL BEARING SURFACE WITH TRUSS CHORD AT JT(S): C

UNFACTORED REACTIONS

JT	1ST LCASE COMBINED	MAX./MIN. COMPONENT REACTIONS SNOW	LIVE	PERM.LIVE	WIND	DEAD	SOIL
E	348	235 / 0	0 / 0	0 / 0	0 / 0	113 / 0	0 / 0
C	129	103 / 0	0 / 0	0 / 0	0 / 0	26 / 0	0 / 0
D	34	0 / 0	0 / 0	0 / 0	0 / 0	34 / 0	0 / 0

BEARING MATERIAL TO BE SPF NO.2 OR BETTER AT JOINT(S) E

BRACING
TOP CHORD TO BE SHEATHED OR MAX. PURLIN SPACING = 6.25 FT.
MAX. UNBRACED BOTTOM CHORD LENGTH = 10.00 FT OR RIGID CEILING DIRECTLY APPLIED.

ALL PITCH BREAKS AND PERIMETER CORNER JOINTS MUST BE LATERALLY RESTRAINED.

LOADING
TOTAL LOAD CASES: (4)

CHORDS

MEMB. FR-TO	MAX. FACTORED FORCE (LBS)	FACTORED VERT. LOAD (PLF) FROM	TO	LC1 CSI (LC)	MAX UNBRAC LENGTH
E- B	-428 / 0	0.0	0.0	0.16 (4)	7.81
A- B	0 / 32	-84.9	-84.9	0.11 (1)	10.00
B- C	-35 / 0	-84.9	-84.9	0.50 (1)	6.25
E- D	0 / 0	-18.5	-18.5	0.30 (4)	10.00

WEBS

MEMB. FR-TO	MAX. FACTORED FORCE (LBS)	MAX CSI (LC)

DESIGN CRITERIA

SPECIFIED LOADS:

TOP CH.	LL =	23.3	PSF
	DL =	6.0	PSF
BOT CH.	LL =	0.0	PSF
	DL =	7.4	PSF
TOTAL LOAD	=	36.7	PSF

SPACING = 24.0 IN. C/C

THIS TRUSS IS DESIGNED FOR RESIDENTIAL OR SMALL BUILDING REQUIREMENTS OF PART 9, NBCC 2010

THIS DESIGN COMPLIES WITH:
- PART 9 OF OBC 2012 , BCBC 2012 , ABC 2014
- CSA 086-09
- TPIC 2011

DESIGN ASSUMPTIONS
-OVERHANG NOT TO BE ALTERED OR CUT OFF.

(55 % OF 27.2 P.S.F. G.S.L. PLUS 8.4 P.S.F. RAIN LOAD) EQUALS 23.3 P.S.F. SPECIFIED ROOF LIVE LOAD

ALLOWABLE DEFL.(LL)= L/360 (0.20")
CALCULATED VERT. DEFL.(LL) = L/ 999 (0.00")
ALLOWABLE DEFL.(TL)= L/360 (0.20")
CALCULATED VERT. DEFL.(TL) = L/ 932 (0.08")

CSI: TC=0.50/1.00 (B-C:1) , BC=0.30/1.00 (D-E:4) , WB=0.00/1.00 (n/a:0) , SSI=0.20/1.00 (B-C:1)

DOL LUMBER=1.00 NAIL=1.00 LS BEND=1.10 COMP=1.10 SHEAR=1.10 TENS= 1.10

COMPANION LIVE LOAD FACTOR = 0.50

AUTOSOLVE RIGHT HEEL ONLY

TRUSS PLATE MANUFACTURER IS NOT RESPONSIBLE FOR QUALITY CONTROL IN THE TRUSS MANUFACTURING PLANT .

NAIL VALUES

PLATE	GRIP(DRY) (PSI) MAX	MIN	SHEAR (PLI) MAX	MIN	SECTION (PLI) MAX	MIN
MT20	618	354	1667	788	1987	1656

PLATE PLACEMENT TOL. = 0.250 inches

PLATE ROTATION TOL. = 5.0 Deg.

JSI GRIP= 0.28 (B) (INPUT = 0.90)
JSI METAL= 0.22 (B) (INPUT = 1.00)

JOB NAME	TRUSS NAME	QUANTITY	PLY	JOB DESC. / TRUSS DESC.	DRWG NO.
313991	J02T		1	JT-39002	E-19112533

Alpa Roof Truss, Maple

Version 8.300 S Aug 9 2019 MiTek Industries, Inc. Fri Nov 8 13:12:09 2019 Page 1
ID:VRLqmclDiflZCj2mk6F92VyQuye-REaGzQngW6S0Su5SNxnq5L1fNWpjxeSdyXmoqNyLFG4

Scale = 1:42.3

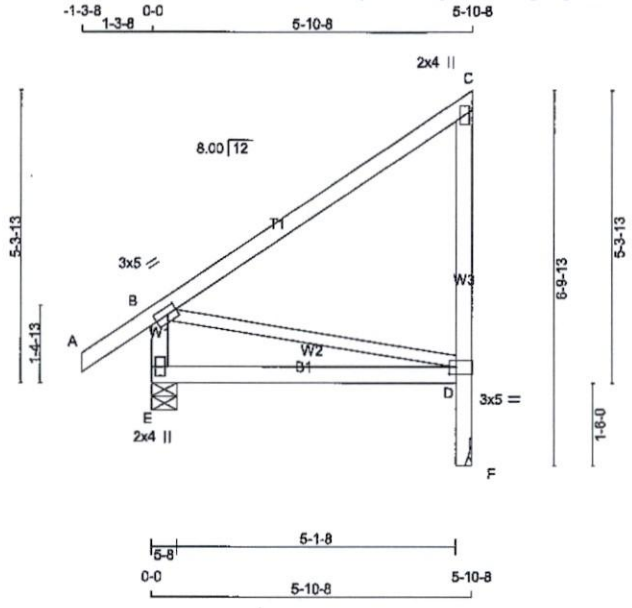

TOTAL WEIGHT = 2 X 29 = 59 lb [M]

LUMBER
N. L. G. A. RULES

CHORDS	SIZE		LUMBER	DESCR.
E - B	2x4	DRY	No.2	SPF
A - C	2x4	DRY	No.2	SPF
F - C	2x4	DRY	No.2	SPF
E - D	2x4	DRY	No.2	SPF
ALL WEBS	2x3	DRY	No.2	SPF

DRY: SEASONED LUMBER.

PLATES (table is in inches)

JT	TYPE	PLATES	W	LEN	Y	X
B	TMVW-t	MT20	3.0	5.0	1.50	2.00
C	TMV+p	MT20	2.0	4.0		
D	BVMW-t	MT20	3.0	5.0	1.50	1.50
E	BMV1+p	MT20	2.0	4.0		

NOTE: Lateral brace(s) shown shall be 2x4 SPF #2

DIMENSIONS, SUPPORTS AND LOADINGS SPECIFIED BY FABRICATOR TO BE VERIFIED BY BUILDING DESIGNER

BEARINGS

JT	FACTORED GROSS REACTION VERT	HORZ	MAXIMUM FACTORED GROSS REACTION DOWN	HORZ	UPLIFT	INPUT BRG IN-SX	REQRD BRG IN-SX
E	420	0	420	0	0	5-8	1-8
F	304	0	304	0	0	MECHANICAL	

A SUITABLE HANGER/MECHANICAL CONNECTION IS REQUIRED AT JOINT F. MINIMUM BEARING LENGTH AT JOINT F = 1-8.

UNFACTORED REACTIONS

JT	1ST LCASE COMBINED	MAX./MIN. COMPONENT REACTIONS SNOW	LIVE	PERM.LIVE	WIND	DEAD	SOIL
E	296	201 / 0	0 / 0	0 / 0	0 / 0	95 / 0	0 / 0
F	216	137 / 0	0 / 0	0 / 0	0 / 0	79 / 0	0 / 0

BEARING MATERIAL TO BE SPF NO.2 OR BETTER AT JOINT(S) E

BRACING
TOP CHORD TO BE SHEATHED OR MAX. PURLIN SPACING = 10.00 FT.
MAX. UNBRACED BOTTOM CHORD LENGTH = 10.00 FT OR RIGID CEILING DIRECTLY APPLIED.

ALL PITCH BREAKS AND PERIMETER CORNER JOINTS MUST BE LATERALLY RESTRAINED.

LOADING
TOTAL LOAD CASES: (4)

CHORDS

MEMB. FR-TO	MAX. FACTORED FORCE (LBS)	FACTORED VERT. LOAD (PLF) FROM	TO	MAX CSI (LC)	MAX. UNBRAC LENGTH
E- B	-366 / 0	0.0	0.0	0.04 (1)	7.81
A- B	0 / 32	-84.9	-84.9	0.11 (1)	10.00
B- C	0 / 0	-84.9	-84.9	0.50 (1)	10.00
F- D	-304 / 0	0.0	0.0	0.04 (1)	7.81
D- C	-249 / 0	0.0	0.0	0.14 (1)	7.81
E- D	0 / 0	-18.5	-18.5	0.19 (4)	10.00

WEBS

MEMB. FR-TO	MAX. FACTORED FORCE (LBS)	MAX CSI (LC)
B- D	0 / 0	0.00 (1)

DESIGN CRITERIA

SPECIFIED LOADS:

TOP CH.	LL =	23.3	PSF
	DL =	6.0	PSF
BOT CH.	LL =	0.0	PSF
	DL =	7.4	PSF
TOTAL LOAD	=	36.7	PSF

SPACING = 24.0 IN. C/C

THIS TRUSS IS DESIGNED FOR RESIDENTIAL OR SMALL BUILDING REQUIREMENTS OF PART 9, NBCC 2010

THIS DESIGN COMPLIES WITH:
- PART 9 OF OBC 2012 , BCBC 2012 , ABC 2014
- CSA 086-09
- TPIC 2011

(55 % OF 27.2 P.S.F. G.S.L. PLUS 8.4 P.S.F. RAIN LOAD) EQUALS 23.3 P.S.F. SPECIFIED ROOF LIVE LOAD

ALLOWABLE DEFL.(LL)= L/360 (0.20")
CALCULATED VERT. DEFL.(LL) = L/ 999 (0.00")
ALLOWABLE DEFL.(TL)= L/360 (0.20")
CALCULATED VERT. DEFL.(TL) = L/ 999 (0.05")

CSI: TC=0.50/1.00 (B-C:1) , BC=0.19/1.00 (D-E:4) , WB=0.00/1.00 (B-D:1) , SSI=0.16/1.00 (B-C:1)

DOL LUMBER=1.00 NAIL=1.00 LS BEND=1.10 COMP=1.10 SHEAR=1.10 TENS= 1.10

COMPANION LIVE LOAD FACTOR = 0.50

TRUSS PLATE MANUFACTURER IS NOT RESPONSIBLE FOR QUALITY CONTROL IN THE TRUSS MANUFACTURING PLANT .

NAIL VALUES

PLATE	GRIP(DRY) (PSI) MAX	MIN	SHEAR (PLI) MAX	MIN	SECTION (PLI) MAX	MIN
MT20	618	354	1667	788	1987	1656

PLATE PLACEMENT TOL. = 0.250 inches

PLATE ROTATION TOL. = 5.0 Deg.

JSI GRIP= 0.36 (D) (INPUT = 0.90)
JSI METAL= 0.13 (C) (INPUT = 1.00)

JOB NAME	TRUSS NAME	QUANTITY	PLY	JOB DESC.		DRWG NO.
313991	J02TA		1	TRUSS DESC.	JT-39002	E-19112534

Alpa Roof Truss, Maple

Version 8.300 S Aug 9 2019 MiTek Industries, Inc. Fri Nov 8 13:12:10 2019 Page 1
ID:VRLqmcIDiflZCj2mk6F92VyQuye-vR8eAloIHPat32gfxel3dYZxsw8yg4TmBBVMNqyLFG3

Scale = 1:41.0

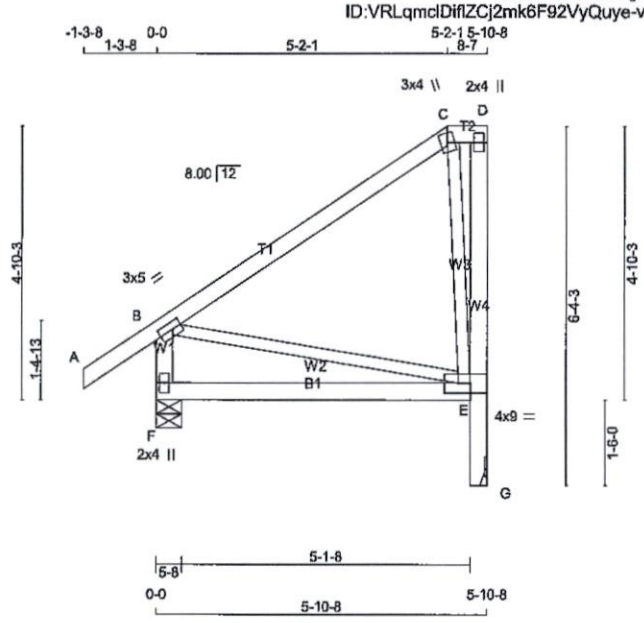

TOTAL WEIGHT = 32 lb
[M]

LUMBER
N. L. G. A. RULES

CHORDS	SIZE		LUMBER	DESCR.
A - C	2x4	DRY	No.2	SPF
C - D	2x4	DRY	No.2	SPF
G - D	2x4	DRY	No.2	SPF
F - B	2x4	DRY	No.2	SPF
F - E	2x4	DRY	No.2	SPF
ALL WEBS EXCEPT	2x3	DRY	No.2	SPF

DRY: SEASONED LUMBER.

PLATES (table is in inches)

JT	TYPE	PLATES	W	LEN	Y	X
B	TMVW-t	MT20	3.0	5.0	1.50	2.00
C	TTW+m	MT20	3.0	4.0		
D	TMV+p	MT20	2.0	4.0		
E	BVMWW-l	MT20	4.0	9.0	2.00	3.00
F	BMV1+p	MT20	2.0	4.0		

NOTE: Lateral brace(s) shown shall be 2x4 SPF #2

LICENSED PROFESSIONAL ENGINEER
11/08/2019
R. TURENNE
100157040
PROVINCE OF ONTARIO

DIMENSIONS, SUPPORTS AND LOADINGS SPECIFIED BY FABRICATOR TO BE VERIFIED BY BUILDING DESIGNER

BEARINGS

JT	FACTORED GROSS REACTION VERT	HORZ	MAXIMUM FACTORED GROSS REACTION DOWN	HORZ	UPLIFT	INPUT BRG IN-SX	REQRD BRG IN-SX
G	304	0	304	0	0	MECHANICAL	
F	420	0	420	0	0	5-8	1-8

A SUITABLE HANGER/MECHANICAL CONNECTION IS REQUIRED AT JOINT G. MINIMUM BEARING LENGTH AT JOINT G = 1-8.

UNFACTORED REACTIONS

JT	1ST LCASE COMBINED	MAX./MIN. COMPONENT REACTIONS SNOW	LIVE	PERM.LIVE	WIND	DEAD	SOIL
G	216	137 / 0	0 / 0	0 / 0	0 / 0	79 / 0	0 / 0
F	296	201 / 0	0 / 0	0 / 0	0 / 0	95 / 0	0 / 0

BEARING MATERIAL TO BE SPF NO.2 OR BETTER AT JOINT(S) F

BRACING
TOP CHORD TO BE SHEATHED OR MAX. PURLIN SPACING = 6.25 FT.
MAX. UNBRACED BOTTOM CHORD LENGTH = 10.00 FT OR RIGID CEILING DIRECTLY APPLIED.

ALL PITCH BREAKS AND PERIMETER CORNER JOINTS MUST BE LATERALLY RESTRAINED.

LOADING
TOTAL LOAD CASES: (4)

CHORDS

MEMB. FR-TO	MAX. FACTORED FORCE (LBS)	FACTORED VERT. LOAD (PLF) FROM	TO	LC1	MAX CSI (LC)	MAX. UNBRAC LENGTH
A- B	0 / 32	-84.9	-84.9	0.11 (1)		10.00
B- C	-42 / 0	-84.9	-84.9	0.39 (1)		6.25
C- D	0 / 0	-84.9	-84.9	0.01 (1)		10.00
G- E	-304 / 0	0.0	0.0	0.04 (1)		7.81
E- D	-30 / 0	0.0	0.0	0.01 (1)		7.81
F- B	-366 / 0	0.0	0.0	0.04 (1)		7.81
F- E	0 / 0	-18.5	-18.5	0.19 (4)		10.00

WEBS

MEMB. FR-TO	MAX. FACTORED FORCE (LBS)	MAX CSI (LC)
C- E	-229 / 0	0.08 (1)
B- E	0 / 36	0.01 (1)

DESIGN CRITERIA

SPECIFIED LOADS:

TOP CH.	LL =	23.3	PSF
	DL =	6.0	PSF
BOT CH.	LL =	0.0	PSF
	DL =	7.4	PSF
TOTAL LOAD	=	36.7	PSF

SPACING = 24.0 IN. C/C

LOADING IN FLAT SECTION BASED ON A SLOPE OF 2.00/12 MINIMUM

THIS TRUSS IS DESIGNED FOR RESIDENTIAL OR SMALL BUILDING REQUIREMENTS OF PART 9, NBCC 2010

THIS DESIGN COMPLIES WITH:
- PART 9 OF OBC 2012 , BCBC 2012 , ABC 2014
- CSA 086-09
- TPIC 2011

(65 % OF 27.2 P.S.F. G.S.L. PLUS 8.4 P.S.F. RAIN LOAD) EQUALS 23.3 P.S.F. SPECIFIED ROOF LIVE LOAD

ALLOWABLE DEFL.(LL)= L/360 (0.20")
CALCULATED VERT. DEFL.(LL) = L/ 999 (0.00")
ALLOWABLE DEFL.(TL)= L/360 (0.20")
CALCULATED VERT. DEFL.(TL) = L/ 999 (0.05")

CSI: TC=0.39/1.00 (B-C:1) , BC=0.19/1.00 (E-F:4) , WB=0.08/1.00 (C-E:1) , SSI=0.14/1.00 (B-C:1)

DOL LUMBER=1.00 NAIL=1.00 LS BEND=1.10 COMP=1.10 SHEAR=1.10 TENS= 1.10

COMPANION LIVE LOAD FACTOR = 0.50

TRUSS PLATE MANUFACTURER IS NOT RESPONSIBLE FOR QUALITY CONTROL IN THE TRUSS MANUFACTURING PLANT .

NAIL VALUES

PLATE	GRIP(DRY) (PSI) MAX	MIN	SHEAR (PLI) MAX	MIN	SECTION (PLI) MAX	MIN
MT20	618	354	1667	788	1987	1656

PLATE PLACEMENT TOL. = 0.250 Inches

PLATE ROTATION TOL. = 5.0 Deg.

JSI GRIP= 0.33 (B) (INPUT = 0.90)
JSI METAL= 0.12 (E) (INPUT = 1.00)

JOB NAME	TRUSS NAME	QUANTITY	PLY	JOB DESC.		DRWG NO.
313991	J03		1	TRUSS DESC.	JT-39002	E-19112535

Alpa Roof Truss, Maple

Version 8.300 S Aug 9 2019 MiTek Industries, Inc. Fri Nov 8 13:12:25 2019 Page 1
ID:VRLqmcIDifIZCj2mk6F92VyQuye-zJYJKu_il0TlNMKXJI4akjhYkzHghtQze1eeOSyLFFq

Scale = 1:35.2

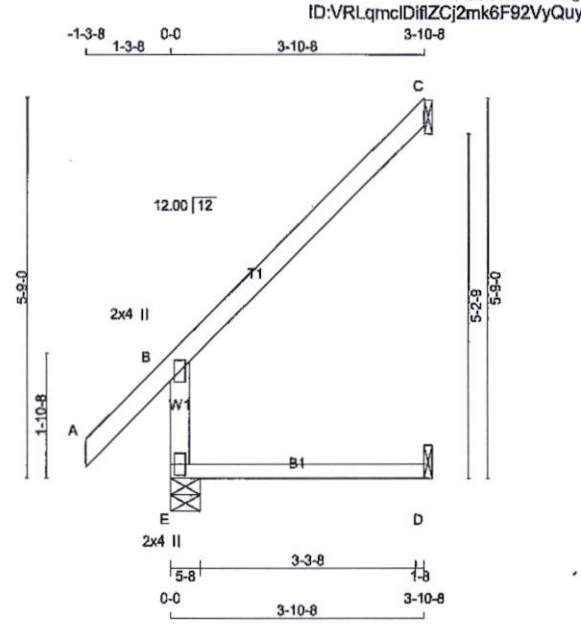

TOTAL WEIGHT = 2 X 14 = 27 lb [M]

LUMBER

N. L. G. A. RULES

CHORDS	SIZE		LUMBER	DESCR.
E - B	2x4	DRY	No.2	SPF
A - C	2x4	DRY	No.2	SPF
E - D	2x3	DRY	No.2	SPF

DRY: SEASONED LUMBER.

PLATES (table is in inches)

JT	TYPE	PLATES	W	LEN	Y	X
B	TMV+p	MT20	2.0	4.0		
E	BMV1+p	MT20	2.0	4.0		

NOTE: Lateral brace(s) shown shall be 2x4 SPF #2

LICENSED PROFESSIONAL ENGINEER
11/08/2019
R. TURENNE
100157040
PROVINCE OF ONTARIO

DIMENSIONS, SUPPORTS AND LOADINGS SPECIFIED BY FABRICATOR TO BE VERIFIED BY BUILDING DESIGNER

BEARINGS

JT	FACTORED GROSS REACTION VERT	HORZ	MAXIMUM FACTORED GROSS REACTION DOWN	HORZ	UPLIFT	INPUT BRG IN-SX	REQRD BRG IN-SX
E	366	0	366	0	0	5-8	1-8
C	123	0	123	0	0	1-8	1-8
D	30	0	33	0	0	1-8	1-8

SEE MITEK STANDARD DETAIL B97791H FOR CONNECTION TO JOINT(S) C , D

UNFACTORED REACTIONS

JT	1ST LCASE COMBINED	MAX./MIN. COMPONENT REACTIONS SNOW	LIVE	PERM.LIVE	WIND	DEAD	SOIL
E	257	178 / 0	0 / 0	0 / 0	0 / 0	79 / 0	0 / 0
C	85	68 / 0	0 / 0	0 / 0	0 / 0	17 / 0	0 / 0
D	24	0 / 0	0 / 0	0 / 0	0 / 0	24 / 0	0 / 0

BEARING MATERIAL TO BE SPF NO.2 OR BETTER AT JOINT(S) E

BRACING

TOP CHORD TO BE SHEATHED OR MAX. PURLIN SPACING = 6.25 FT.
MAX. UNBRACED BOTTOM CHORD LENGTH = 10.00 FT OR RIGID CEILING DIRECTLY APPLIED.

ALL PITCH BREAKS AND PERIMETER CORNER JOINTS MUST BE LATERALLY RESTRAINED.

LOADING

TOTAL LOAD CASES: (5)

CHORDS

MEMB. FR-TO	MAX. FACTORED FORCE (LBS)	FACTORED VERT. LOAD LC1 (PLF) FROM	TO	MAX CSI (LC)	MAX. UNBRAC LENGTH
E- B	-324 / 0	0.0	0.0	0.06 (4)	7.81
A- B	0 / 42	-84.9	-84.9	0.14 (5)	10.00
B- C	-29 / 0	-84.9	-84.9	0.22 (1)	6.25
E- D	0 / 0	-18.5	-18.5	0.11 (4)	10.00

WEBS

MEMB. FR-TO	MAX. FACTORED FORCE (LBS)	MAX CSI (LC)

CANTILEVER ANALYSIS HAS BEEN CONSIDERED IN THIS DESIGN

DESIGN CRITERIA

SPECIFIED LOADS:

TOP CH.	LL	=	23.3	PSF
	DL	=	6.0	PSF
BOT CH.	LL	=	0.0	PSF
	DL	=	7.4	PSF
TOTAL LOAD		=	36.7	PSF

SPACING = 24.0 IN. C/C

THIS TRUSS IS DESIGNED FOR RESIDENTIAL OR SMALL BUILDING REQUIREMENTS OF PART 9, NBCC 2010

THIS DESIGN COMPLIES WITH:
- PART 9 OF OBC 2012 , BCBC 2012 , ABC 2014
- CSA 086-09
- TPIC 2011

DESIGN ASSUMPTIONS
-OVERHANG NOT TO BE ALTERED OR CUT OFF.

(55 % OF 27.2 P.S.F. G.S.L. PLUS 8.4 P.S.F. RAIN LOAD) EQUALS 23.3 P.S.F. SPECIFIED ROOF LIVE LOAD

ALLOWABLE DEFL.(LL)= L/360 (0.19")
CALCULATED VERT. DEFL.(LL) = L/ 999 (0.00")
ALLOWABLE DEFL.(TL)= L/360 (0.19")
CALCULATED VERT. DEFL.(TL) = L/ 999 (0.02")

CSI: TC=0.22/1.00 (B-C:1) , BC=0.11/1.00 (D-E:4) , WB=0.00/1.00 (n/a:0) , SSI=0.11/1.00 (B-C:1)

DOL LUMBER=1.00 NAIL=1.00 LS BEND=1.10 COMP=1.10 SHEAR=1.10 TENS= 1.10

COMPANION LIVE LOAD FACTOR = 0.50

AUTOSOLVE RIGHT HEEL ONLY

TRUSS PLATE MANUFACTURER IS NOT RESPONSIBLE FOR QUALITY CONTROL IN THE TRUSS MANUFACTURING PLANT .

NAIL VALUES

PLATE	GRIP(DRY) (PSI) MAX	MIN	SHEAR (PLI) MAX	MIN	SECTION (PLI) MAX	MIN
MT20	618	354	1667	788	1987	1656

PLATE PLACEMENT TOL. = 0.250 inches

PLATE ROTATION TOL. = 5.0 Deg.

JSI GRIP= 0.26 (B) (INPUT = 0.90)
JSI METAL= 0.17 (B) (INPUT = 1.00)

JOB NAME	TRUSS NAME	QUANTITY	PLY	JOB DESC.	DRWG NO.
314234	H21T		1	TRUSS DESC. JT-39002	E-19112536

Alpa Roof Truss, Maple

Version 8.300 S Aug 9 2019 MiTek Industries, Inc. Mon Nov 11 08:15:36 2019 Page 1

ID:VRLqmcIDiflZCj2mk6F92VyQuye-d_q4?rlpqPBAo_eyoDHgfCtPz8WaWF4dPCCVlZyKKK5

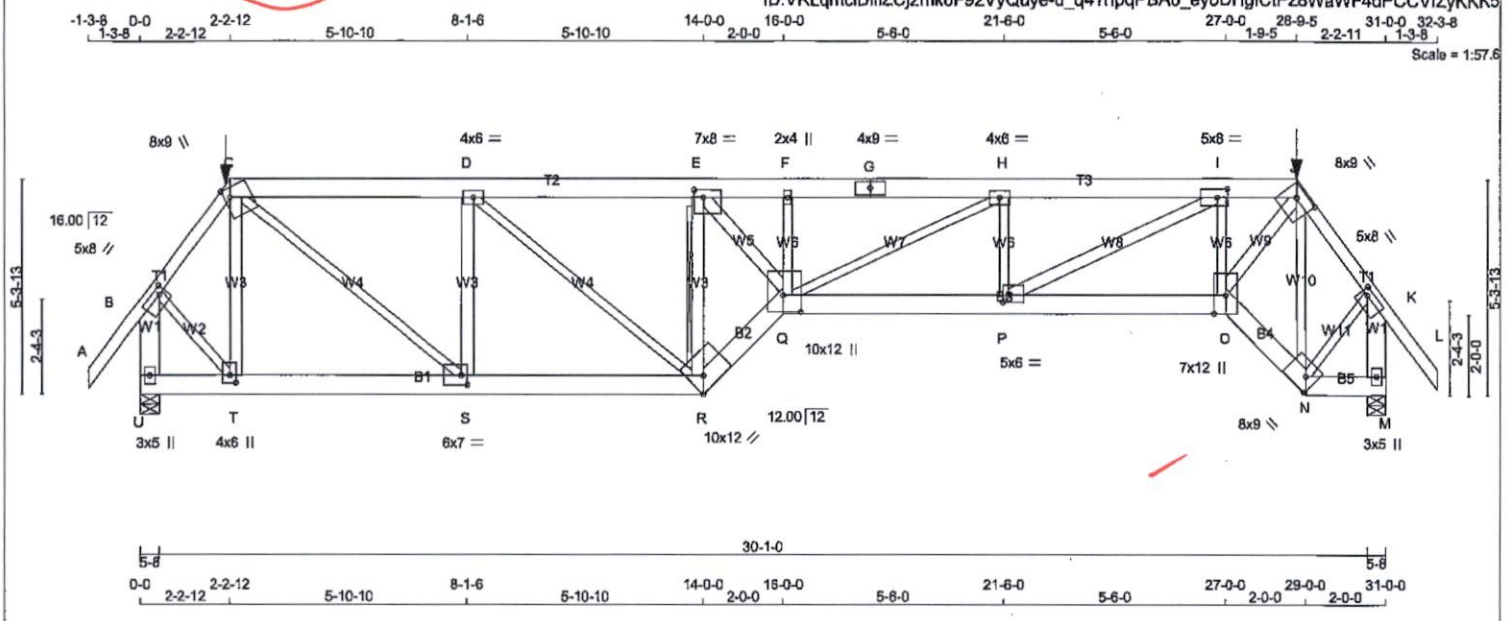

TOTAL WEIGHT = 187 lb

[M]

LUMBER

N. L. G. A. RULES

CHORDS	SIZE		LUMBER	DESCR.
A - C	2x4	DRY	No.2	SPF
C - G	2x6	DRY	No.2	SPF
G - J	2x6	DRY	No.2	SPF
J - L	2x4	DRY	No.2	SPF
U - B	2x6	DRY	No.2	SPF
M - K	2x6	DRY	No.2	SPF
U - R	2x6	DRY	No.2	SPF
R - Q	2x6	DRY	1650F 1.5E	SPF
Q - O	2x6	DRY	1650F 1.5E	SPF
O - N	2x6	DRY	No.2	SPF
N - M	2x6	DRY	No.2	SPF
ALL WEBS	2x3	DRY	No.2	SPF
EXCEPT				
T - C	2x4	DRY	No.2	SPF
S - D	2x4	DRY	No.2	SPF
R - E	2x4	DRY	No.2	SPF
E - Q	2x4	DRY	1650F 1.5E	SPF
P - I	2x4	DRY	No.2	SPF
O - J	2x4	DRY	No.2	SPF

DRY: SEASONED LUMBER.

PLATES (table is in inches)

JT	TYPE	PLATES	W	LEN	Y	X
B	TMVW-t	MT20	5.0	8.0	1.75	2.00
C	TTWW+m	MT20	8.0	9.0	2.75	1.75
D	TMWW-t	MT20	4.0	6.0		
E	TMWW-t	MT20	7.0	8.0	2.25	2.75
F	TMW+w	MT20	2.0	4.0		
G	TS-t	MT20	4.0	9.0		
H	TMWW-t	MT20	4.0	6.0		
I	TMWW-t	MT20	5.0	8.0	2.50	3.00
J	TTWW-h	MT20	8.0	9.0	2.75	5.25
K	TMVW-t	MT20	5.0	8.0	1.75	2.00
M	BMV1+p	MT20	3.0	5.0		
N	BBWW-h	MT20	8.0	9.0	3.75	3.00
O	BBWW+p	MT20	7.0	12.0	Edge	
P	BMWW-t	MT20	5.0	6.0	2.00	1.50
Q	BBWWW+p	MT20	10.0	12.0	5.00	5.25
R	BBWW-h	MT20	10.0	12.0	Edge	4.00
S	BMWW-t	MT20	6.0	7.0	2.75	1.75

NOTE: Lateral brace(s) shown shall be 2x4 SPF #2

LICENSED PROFESSIONAL ENGINEER
11/11/2019
R. TURENNE
100157040
PROVINCE OF ONTARIO

DIMENSIONS, SUPPORTS AND LOADINGS SPECIFIED BY FABRICATOR TO BE VERIFIED BY BUILDING DESIGNER

BEARINGS

JT	FACTORED GROSS REACTION VERT	HORZ	MAXIMUM FACTORED GROSS REACTION DOWN	HORZ	UPLIFT	INPUT BRG IN-SX	REQRD BRG IN-SX
U	3223	0	3223	0	0	5-8	5-0
M	3241	0	3241	0	0	5-8	5-1

ALLOW FOR 0.4" OF HORIZONTAL MOVEMENT DUE TO TOTAL LOAD

UNFACTORED REACTIONS

JT	1ST LCASE COMBINED	MAX./MIN. COMPONENT REACTIONS SNOW	LIVE	PERM.LIVE	WIND	DEAD	SOIL
U	2287	1459 / 0	0 / 0	0 / 0	0 / 0	828 / 0	0 / 0
M	2299	1469 / 0	0 / 0	0 / 0	0 / 0	830 / 0	0 / 0

BEARING MATERIAL TO BE SPF NO.2 OR BETTER AT JOINT(S) U, M

BRACING

TOP CHORD TO BE SHEATHED OR MAX. PURLIN SPACING = 2.34 FT.
MAX. UNBRACED BOTTOM CHORD LENGTH = 10.00 FT OR RIGID CEILING DIRECTLY APPLIED.

ALL PITCH BREAKS AND PERIMETER CORNER JOINTS MUST BE LATERALLY RESTRAINED.

2x4 DRY SPF No.2 T-BRACE AT E-R

FASTEN T AND I-BRACES TO NARROW EDGE OF WEB WITH ONE ROW PER PLY OF 3" COMMON WIRE NAILS @ 6" O.C. WITH 3" MINIMUM END DISTANCE. BRACE MUST COVER 90% OF WEB LENGTH.

END VERTICAL(S) MUST BE SHEATHED OR HAVE BRACES AS INDICATED IN THE MAX. UNBRACED LENGTH COLUMN OF THE TABLE BELOW

LOADING

TOTAL LOAD CASES: (4)

CHORDS

MEMB. FR-TO	MAX. FACTORED FORCE (LBS)	FACTORED VERT. LOAD LC1 (PLF) FROM	TO	MAX CSI (LC)	MAX. UNBRAC LENGTH
A- B	0 / 48	-84.9	-84.9	0.13 (1)	10.00
B- C	-2375 / 0	-84.9	-84.9	0.16 (1)	4.30
C- D	-4032 / 0	-167.1	-167.1	0.59 (1)	3.64
D- E	-5085 / 0	-167.1	-167.1	0.67 (1)	3.17
E- F	-8636 / 0	-84.9	-84.9	0.63 (1)	2.53
F- G	-8640 / 0	-84.9	-84.9	0.82 (1)	2.34
G- H	-8640 / 0	-84.9	-84.9	0.82 (1)	2.34
H- I	-7447 / 0	-84.9	-84.9	0.56 (1)	2.85
I- J	-3968 / 0	-84.9	-84.9	0.15 (1)	4.22
J- K	-2217 / 0	-84.9	-84.9	0.15 (1)	4.43
K- L	0 / 48	-84.9	-84.9	0.13 (1)	10.00
U- B	-3241 / 0	0.0	0.0	0.29 (1)	5.84
M- K	-3204 / 0	0.0	0.0	0.29 (1)	5.87
U- T	0 / 0	-36.4	-36.4	0.11 (4)	10.00
T- S	0 / 1396	-36.4	-36.4	0.29 (1)	10.00
S- R	0 / 4032	-36.4	-36.4	0.63 (1)	10.00
R- Q	0 / 6954	-118.6	-118.6	0.60 (1)	10.00
Q- P	0 / 7446	-118.6	-118.6	0.77 (1)	10.00
P- O	0 / 4046	-118.6	-118.6	0.50 (1)	10.00
O- N	0 / 2046	-118.6	-118.6	0.31 (1)	10.00
N- M	0 / 0	-36.4	-36.4	0.02 (4)	10.00

WEBS

MEMB. FR-TO	MAX. FACTORED FORCE (LBS)	MAX CSI (LC)
T- C	-898 / 0	0.24 (1)
C- S	0 / 3416	0.85 (1)
S- D	-2006 / 0	0.54 (1)
D- R	0 / 1360	0.34 (1)
R- E	-5528 / 0	0.91 (1)
E- Q	0 / 6130	0.78 (1)
Q- F	-105 / 0	0.02 (1)
Q- H	0 / 1340	0.33 (1)
P- H	-1153 / 0	0.22 (1)
P- I	0 / 3849	0.68 (1)
O- I	-2111 / 0	0.40 (1)
O- J	0 / 4718	0.83 (1)
J- N	-2509 / 0	0.87 (1)
B- T	0 / 1814	0.45 (1)
N- K	0 / 1800	0.45 (1)

FACTORED CONCENTRATED LOADS (LBS)

JT	LOC.	LC1	MAX-	MAX+	FACE	DIR.	TYPE	HEEL	CONN.
C	2-2-12	-138	-138	—	FRONT	VERT	TOTAL	—	C1
J	28-9-5	-138	-138	—	FRONT	VERT	TOTAL	—	C1

DESIGN CRITERIA

SPECIFIED LOADS:

TOP CH.	LL	=	23.3	PSF
	DL	=	6.0	PSF
BOT CH.	LL	=	0.0	PSF
	DL	=	7.4	PSF
TOTAL LOAD		=	36.7	PSF

SPACING = 24.0 IN. C/C

LOADING IN FLAT SECTION BASED ON A SLOPE OF 2.00/12 MINIMUM

GIRDER TYPE: CPrimeHip
SIDE SETBACK = 2-2-12
END SETBACK = 5-10-8
END WALL WIDTH = 0-0
CORNER FRAMING TYPE: CONVENTIONAL
END JACK TYPE: CONVENTIONAL
APPLIED TO FRONT SIDE
- ADDT'L LOADS BASED ON 55 % OF GSL.
LOADS APPLIED TO FIRST 14-0-0 OF SPAN MEASURED FROM THE LEFT.

GIRDER TYPE: CPrimeHip
SIDE SETBACK = 2-2-12
END SETBACK = 5-10-8
END WALL WIDTH = 0-0
CORNER FRAMING TYPE: CONVENTIONAL
END JACK TYPE: CONVENTIONAL
APPLIED TO FRONT SIDE
- ADDT'L LOADS BASED ON 55 % OF GSL.
LOADS APPLIED TO FIRST 2-2-12 OF SPAN MEASURED FROM THE RIGHT.

GIRDER TYPE: CStdGirder
START DISTANCE = 14-0-0
START SPAN CARRIED = 5-10-8
END DISTANCE = 29-0-0
END SPAN CARRIED = 5-10-8
END WALL WIDTH = 0-0
APPLIED TO FRONT SIDE OF BOTTOM CHORD.
- ADDT'L LOADS BASED ON 55 % OF GSL. (DEFINED BY USER)

THIS TRUSS IS DESIGNED FOR RESIDENTIAL OR SMALL BUILDING REQUIREMENTS OF PART 9, NBCC 2010, NBCC 2015

THIS DESIGN COMPLIES WITH:
- PART 9 OF BCBC 2018 , OBC 2012 , ABC 2019
- CSA 086-09, CSA 086-14
- TPIC 2011, TPIC 2014

(55 % OF 27.2 P.S.F. G.S.L. PLUS 8.4 P.S.F. RAIN LOAD) EQUALS 23.3 P.S.F. SPECIFIED ROOF LIVE LOAD

ALLOWABLE DEFL.(LL)= L/360 (1.03")
CALCULATED VERT. DEFL.(LL) = L/ 968 (0.36")
ALLOWABLE DEFL.(TL)= L/360 (1.03")
CALCULATED VERT. DEFL.(TL) = L/ 509 (0.73")

CSI: TC=0.82/1.00 (F-H:1) , BC=0.77/1.00 (P-Q:1) , WB=0.91/1.00 (E-R:1) , SSI=0.39/1.00 (C-D:1)

CONTINUED ON PAGE 2

PLATES (table is in inches)

JT	TYPE	PLATES	W	LEN	Y	X
T	BMWW+t	MT20	4.0	6.0	2.25	1.75
U	BMV1+p	MT20	3.0	5.0		

Edge - INDICATES REFERENCE CORNER OF PLATE TOUCHES EDGE OF CHORD.

NOTE: Lateral brace(s) shown shall be 2x4 SPF #2

LICENSED PROFESSIONAL ENGINEER
11/11/2019
R. TURENNE
100157040
PROVINCE OF ONTARIO

CONNECTION REQUIREMENTS

1) **C1:** A SUITABLE HANGER/MECHANICAL CONNECTION IS REQUIRED.

DOL LUMBER=1.00 NAIL=1.00 LS BEND=1.00 COMP=1.00 SHEAR=1.00 TENS= 1.00

COMPANION LIVE LOAD FACTOR = 1.00

AUTOSOLVE HEELS OFF

TRUSS PLATE MANUFACTURER IS NOT RESPONSIBLE FOR QUALITY CONTROL IN THE TRUSS MANUFACTURING PLANT .

NAIL VALUES

PLATE	GRIP(DRY) (PSI)		SHEAR (PLI)		SECTION (PLI)	
	MAX	MIN	MAX	MIN	MAX	MIN
MT20	618	354	1667	788	1987	1656

PLATE PLACEMENT TOL. = 0.250 inches

PLATE ROTATION TOL. = 5.0 Deg.

JSI GRIP= 0.90 (S) (INPUT = 0.90)
JSI METAL= 0.98 (O) (INPUT = 1.00)

JOB NAME	TRUSS NAME	QUANTITY	PLY	JOB DESC.	DRWG NO.
314234	H22T		1	TRUSS DESC. JT-39002	E-19112537

Alpa Roof Truss, Maple

Version 8.300 S Aug 9 2019 MiTek Industries, Inc. Mon Nov 11 08:15:37 2019 Page 1
ID:VRLqmclDiflZCj2mk6F92VyQuye-5AOSDBJRbjJ1P8C8LxovCPQcrYxaFmzmesx2r?yKKK4

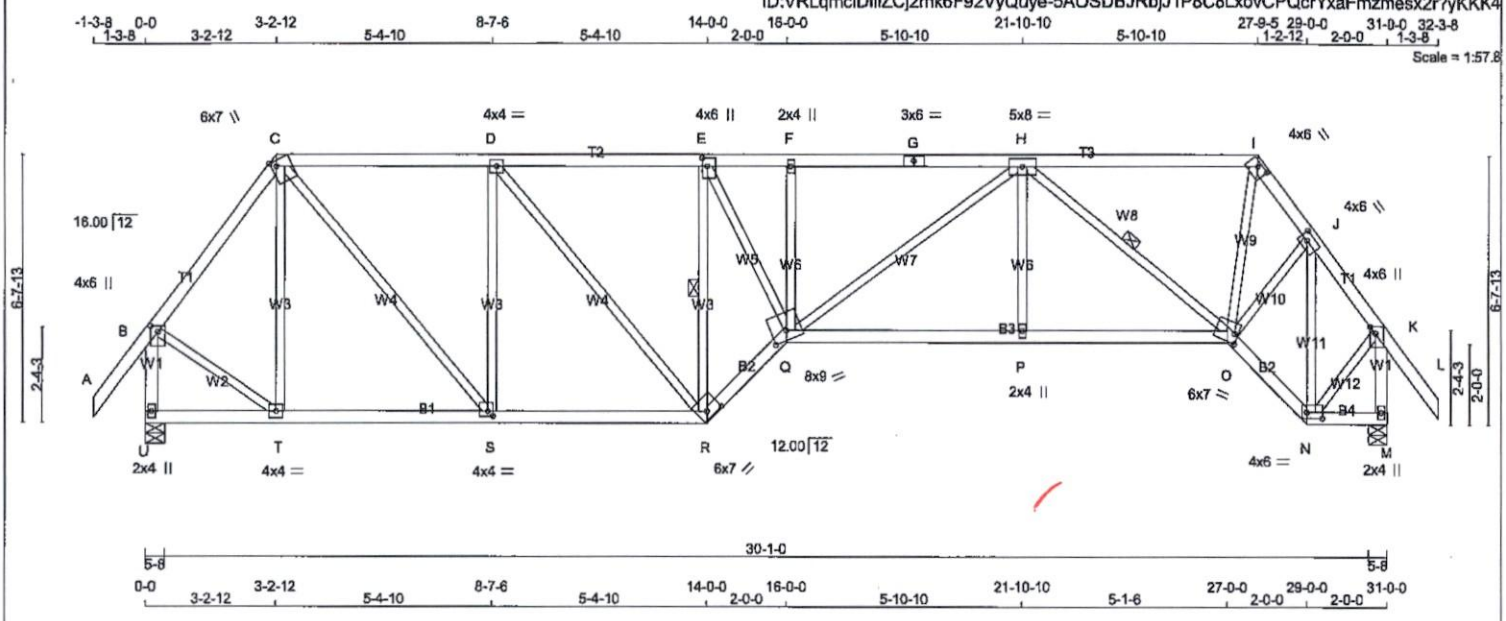

LUMBER
N. L. G. A. RULES

CHORDS	SIZE		LUMBER	DESCR.
A - C	2x4	DRY	No.2	SPF
C - G	2x4	DRY	No.2	SPF
G - I	2x4	DRY	No.2	SPF
I - L	2x4	DRY	No.2	SPF
U - B	2x4	DRY	No.2	SPF
M - K	2x4	DRY	No.2	SPF
U - R	2x4	DRY	No.2	SPF
R - Q	2x4	DRY	No.2	SPF
Q - O	2x4	DRY	No.2	SPF
O - N	2x4	DRY	No.2	SPF
N - M	2x4	DRY	No.2	SPF
ALL WEBS EXCEPT	2x3	DRY	No.2	SPF

DRY: SEASONED LUMBER.

PLATES (table is in inches)

JT	TYPE	PLATES	W	LEN	Y	X
B	TMWW+p	MT20	4.0	6.0	1.75	2.00
C	TTWW+m	MT20	6.0	7.0	Edge	1.50
D	TMWW-t	MT20	4.0	4.0		
E	TMWW+t	MT20	4.0	6.0	2.50	1.50
F	TMW+w	MT20	2.0	4.0		
G	TS-t	MT20	3.0	6.0		
H	TMWWW-t	MT20	5.0	8.0		
I	TTW-h	MT20	4.0	6.0	1.25	3.00
J	TMWW-t	MT20	4.0	6.0	2.00	2.25
K	TMW+p	MT20	4.0	6.0	2.00	Edge
M	BMV1+p	MT20	2.0	4.0		
N	BBWW-l	MT20	4.0	6.0	1.75	4.50
O	BBWWW-m	MT20	6.0	7.0	3.00	1.00
P	BMW+w	MT20	2.0	4.0		
Q	BBWWW-m	MT20	8.0	9.0	2.75	4.50
R	BBWW-h	MT20	6.0	7.0	2.00	4.25
S	BMWW-t	MT20	4.0	4.0	1.50	1.50
T	BMWW-t	MT20	4.0	4.0		
U	BMV1+p	MT20	2.0	4.0		

Edge - INDICATES REFERENCE CORNER OF PLATE TOUCHES EDGE OF CHORD.

NOTE: Lateral brace(s) shown shall be 2x4 SPF #2

LICENSED PROFESSIONAL ENGINEER
11/11/2019
R. TURENNE
100157040
PROVINCE OF ONTARIO

DIMENSIONS, SUPPORTS AND LOADINGS SPECIFIED BY FABRICATOR TO BE VERIFIED BY BUILDING DESIGNER

BEARINGS

JT	FACTORED GROSS REACTION VERT	HORZ	MAXIMUM FACTORED GROSS REACTION DOWN	HORZ	UPLIFT	INPUT BRG IN-SX	REQRD BRG IN-SX
U	1719	0	1719	0	0	5-8	2-9
M	1724	0	1724	0	0	5-8	2-9

UNFACTORED REACTIONS

JT	1ST LCASE COMBINED	MAX./MIN. COMPONENT REACTIONS SNOW	LIVE	PERM.LIVE	WIND	DEAD	SOIL
U	1218	786 / 0	0 / 0	0 / 0	0 / 0	432 / 0	0 / 0
M	1222	789 / 0	0 / 0	0 / 0	0 / 0	433 / 0	0 / 0

BEARING MATERIAL TO BE SPF NO.2 OR BETTER AT JOINT(S) U, M

BRACING
TOP CHORD TO BE SHEATHED OR MAX. PURLIN SPACING = 3.45 FT.
MAX. UNBRACED BOTTOM CHORD LENGTH = 10.00 FT OR RIGID CEILING DIRECTLY APPLIED.

ALL PITCH BREAKS AND PERIMETER CORNER JOINTS MUST BE LATERALLY RESTRAINED.

1 LATERAL BRACE(S) AT 1/ 2 LENGTH OF E-R, H-O.

END VERTICAL(S) MUST BE SHEATHED OR HAVE BRACES AS INDICATED IN THE MAX. UNBRACED LENGTH COLUMN OF THE TABLE BELOW

LOADING
TOTAL LOAD CASES: (4)

CHORDS

MEMB. FR-TO	MAX. FACTORED FORCE (LBS)	FACTORED VERT. LOAD (PLF) FROM	TO	LC1 MAX CSI (LC)	MAX. UNBRAC LENGTH
A- B	0 / 48	-84.9	-84.9	0.12 (1)	10.00
B- C	-1250 / 0	-84.9	-84.9	0.19 (1)	5.55
C- D	-1613 / 0	-84.9	-84.9	0.45 (1)	4.68
D- E	-1956 / 0	-84.9	-84.9	0.48 (1)	4.30
E- F	-2876 / 0	-84.9	-84.9	0.24 (1)	3.91
F- G	-2883 / 0	-84.9	-84.9	0.68 (1)	3.45
G- H	-2883 / 0	-84.9	-84.9	0.68 (1)	3.45
H- I	-1255 / 0	-84.9	-84.9	0.50 (1)	5.06
I- J	-1758 / 0	-84.9	-84.9	0.08 (1)	4.97
J- K	-1097 / 0	-84.9	-84.9	0.13 (1)	5.89
K- L	0 / 48	-84.9	-84.9	0.12 (1)	10.00
U- B	-1699 / 0	0.0	0.0	0.22 (1)	6.38
M- K	-1706 / 0	0.0	0.0	0.22 (1)	6.36
U- T	0 / 0	-18.5	-18.5	0.08 (4)	10.00
T- S	0 / 739	-18.5	-18.5	0.20 (4)	10.00
S- R	0 / 1614	-18.5	-18.5	0.33 (1)	10.00
R- Q	0 / 2713	-18.5	-18.5	0.45 (1)	10.00
Q- P	0 / 2436	-18.5	-18.5	0.47 (1)	10.00
P- O	0 / 2436	-18.5	-18.5	0.46 (1)	10.00
O- N	0 / 850	-18.5	-18.5	0.15 (1)	10.00
N- M	0 / 0	-18.5	-18.5	0.02 (4)	10.00

WEBS

MEMB. FR-TO	MAX. FACTORED FORCE (LBS)	MAX CSI (LC)
T- C	-350 / 0	0.26 (1)
C- S	0 / 1347	0.30 (1)
S- D	-924 / 0	0.68 (1)
D- R	0 / 527	0.12 (1)
R- E	-2252 / 0	0.64 (1)
E- Q	0 / 2190	0.49 (1)
Q- F	-304 / 0	0.10 (1)
Q- H	0 / 555	0.12 (1)
P- H	0 / 131	0.05 (4)
H- O	-1547 / 0	0.48 (1)
O- I	0 / 1168	0.26 (1)
O- J	0 / 686	0.15 (1)
N- J	-1171 / 0	0.40 (1)
B- T	0 / 864	0.19 (1)
N- K	0 / 874	0.20 (1)

DESIGN CRITERIA

SPECIFIED LOADS:

TOP CH.	LL	=	23.3	PSF
	DL	=	6.0	PSF
BOT CH.	LL	=	0.0	PSF
	DL	=	7.4	PSF
TOTAL LOAD		=	36.7	PSF

SPACING = 24.0 IN. C/C

LOADING IN FLAT SECTION BASED ON A SLOPE OF 2.00/12 MINIMUM

THIS TRUSS IS DESIGNED FOR RESIDENTIAL OR SMALL BUILDING REQUIREMENTS OF PART 9, NBCC 2010, NBCC 2015

THIS DESIGN COMPLIES WITH:
- PART 9 OF BCBC 2018 , OBC 2012 , ABC 2019
- CSA 086-09, CSA 086-14
- TPIC 2011, TPIC 2014

DESIGN ASSUMPTIONS
-OVERHANG NOT TO BE ALTERED OR CUT OFF.

(55 % OF 27.2 P.S.F. G.S.L. PLUS 8.4 P.S.F. RAIN LOAD) EQUALS 23.3 P.S.F. SPECIFIED ROOF LIVE LOAD

ALLOWABLE DEFL.(LL)= L/360 (1.03")
CALCULATED VERT. DEFL.(LL) = L/ 999 (0.17")
ALLOWABLE DEFL.(TL)= L/360 (1.03")
CALCULATED VERT. DEFL.(TL) = L/ 999 (0.32")

CSI: TC=0.68/1.00 (F-H:1) , BC=0.47/1.00 (P-Q:1) , WB=0.68/1.00 (D-S:1) , SSI=0.24/1.00 (H-I:1)

DOL LUMBER=1.00 NAIL=1.00 LS BEND=1.10 COMP=1.10 SHEAR=1.10 TENS= 1.10

COMPANION LIVE LOAD FACTOR = 1.00

TRUSS PLATE MANUFACTURER IS NOT RESPONSIBLE FOR QUALITY CONTROL IN THE TRUSS MANUFACTURING PLANT .

NAIL VALUES

PLATE	GRIP(DRY) (PSI) MAX	MIN	SHEAR (PLI) MAX	MIN	SECTION (PLI) MAX	MIN
MT20	618	354	1667	788	1987	1656

PLATE PLACEMENT TOL. = 0.250 inches

PLATE ROTATION TOL. = 5.0 Deg.

JSI GRIP= 0.90 (K) (INPUT = 0.90)
JSI METAL= 0.48 (B) (INPUT = 1.00)

JOB NAME	TRUSS NAME	QUANTITY	PLY	JOB DESC.	DRWG NO.
314234	H23T		1	TRUSS DESC. JT-39002	E-19112538

Alpa Roof Truss, Maple

Version 8.300 S Aug 9 2019 MiTek Industries, Inc. Mon Nov 11 08:15:39 2019 Page 1
ID:VRLqmcIDiflZCj2mk6F92VyQuye-1ZWCetKh7KZlfRMXTLrNHqV?MLeNjf435AQ9vuyKKK2

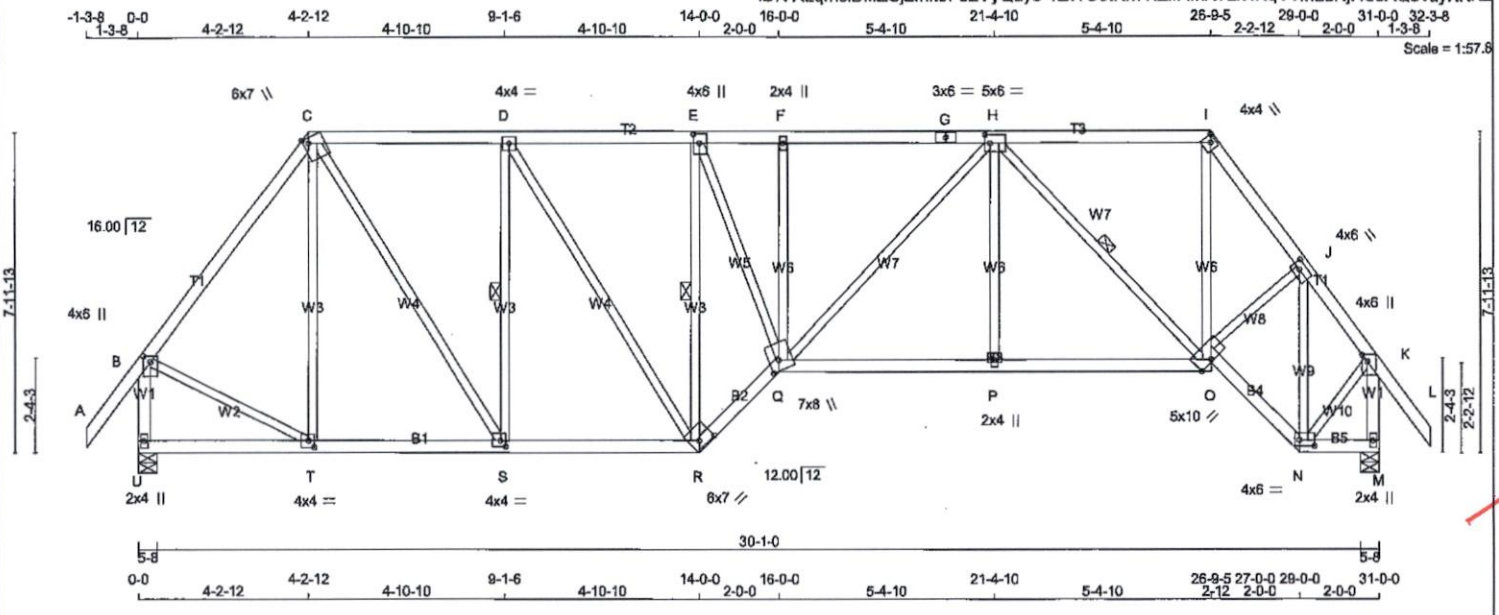

LUMBER
N. L. G. A. RULES

CHORDS	SIZE		LUMBER	DESCR.
A - C	2x4	DRY	No.2	SPF
C - G	2x4	DRY	No.2	SPF
G - I	2x4	DRY	No.2	SPF
I - L	2x4	DRY	No.2	SPF
U - B	2x4	DRY	No.2	SPF
M - K	2x4	DRY	No.2	SPF
U - R	2x4	DRY	No.2	SPF
R - Q	2x4	DRY	No.2	SPF
Q - O	2x4	DRY	No.2	SPF
O - N	2x4	DRY	No.2	SPF
N - M	2x4	DRY	No.2	SPF
ALL WEBS EXCEPT	2x3	DRY	No.2	SPF

DRY: SEASONED LUMBER.

PLATES (table is in inches)

JT	TYPE	PLATES	W	LEN	Y	X
B	TMWW+p	MT20	4.0	6.0	1.75	2.00
C	TTWW+m	MT20	6.0	7.0	Edge	1.50
D	TMWW-t	MT20	4.0	4.0		
E	TMWW+t	MT20	4.0	6.0	2.75	1.75
F	TMW+w	MT20	2.0	4.0		
G	TS-t	MT20	3.0	6.0		
H	TMWWW-t	MT20	5.0	6.0	2.50	1.50
I	TTW-h	MT20	4.0	4.0	Edge	
J	TMWW-t	MT20	4.0	6.0	2.00	2.25
K	TMW+p	MT20	4.0	6.0	2.00	Edge
M	BMV1+p	MT20	2.0	4.0		
N	BBWW-l	MT20	4.0	6.0	1.75	4.50
O	BBWWW+h	MT20	5.0	10.0	4.50	0.50
P	BMW+w	MT20	2.0	4.0		
Q	BBWWW+m	MT20	7.0	8.0	3.00	3.00
R	BBWW-h	MT20	6.0	7.0	2.00	4.25
S	BMWW-t	MT20	4.0	4.0	1.75	1.50
T	BMWW-t	MT20	4.0	4.0	2.00	1.75
U	BMV1+p	MT20	2.0	4.0		

Edge - INDICATES REFERENCE CORNER OF PLATE TOUCHES EDGE OF CHORD.

NOTE: Lateral brace(s) shown shall be 2x4 SPF #2

LICENSED PROFESSIONAL ENGINEER
11/11/2019
R. TURENNE
100157040
PROVINCE OF ONTARIO

DIMENSIONS, SUPPORTS AND LOADINGS SPECIFIED BY FABRICATOR TO BE VERIFIED BY BUILDING DESIGNER

BEARINGS

JT	FACTORED GROSS REACTION VERT	HORZ	MAXIMUM FACTORED GROSS REACTION DOWN	HORZ	UPLIFT	INPUT BRG IN-SX	REQRD BRG IN-SX
U	1719	0	1719	0	0	5-8	2-9
M	1724	0	1724	0	0	5-8	2-9

UNFACTORED REACTIONS

JT	1ST LCASE COMBINED	MAX./MIN. COMPONENT REACTIONS SNOW	LIVE	PERM.LIVE	WIND	DEAD	SOIL
U	1218	786 / 0	0 / 0	0 / 0	0 / 0	432 / 0	0 / 0
M	1222	789 / 0	0 / 0	0 / 0	0 / 0	433 / 0	0 / 0

BEARING MATERIAL TO BE SPF NO.2 OR BETTER AT JOINT(S) U, M

BRACING
TOP CHORD TO BE SHEATHED OR MAX. PURLIN SPACING = 4.08 FT.
MAX. UNBRACED BOTTOM CHORD LENGTH = 10.00 FT OR RIGID CEILING DIRECTLY APPLIED.

ALL PITCH BREAKS AND PERIMETER CORNER JOINTS MUST BE LATERALLY RESTRAINED.

1 LATERAL BRACE(S) AT 1/ 2 LENGTH OF D-S, E-R, H-O.

END VERTICAL(S) MUST BE SHEATHED OR HAVE BRACES AS INDICATED IN THE MAX. UNBRACED LENGTH COLUMN OF THE TABLE BELOW

LOADING
TOTAL LOAD CASES: (4)

CHORDS

MEMB. FR-TO	MAX. FORCE (LBS)	FACTORED VERT. LOAD LC1 (PLF) FROM	TO	MAX CSI (LC)	MAX. UNBRAC LENGTH
A- B	0 / 48	-84.9	-84.9	0.12 (1)	10.00
B- C	-1295 / 0	-84.9	-84.9	0.33 (1)	5.32
C- D	-1371 / 0	-84.9	-84.9	0.36 (1)	5.11
D- E	-1613 / 0	-84.9	-84.9	0.37 (1)	4.79
E- F	-2196 / 0	-84.9	-84.9	0.17 (1)	4.46
F- G	-2201 / 0	-84.9	-84.9	0.49 (1)	4.08
G- H	-2201 / 0	-84.9	-84.9	0.49 (1)	4.08
H- I	-1050 / 0	-84.9	-84.9	0.40 (1)	5.58
I- J	-1767 / 0	-84.9	-84.9	0.12 (1)	4.93
J- K	-1095 / 0	-84.9	-84.9	0.13 (1)	5.89
K- L	0 / 48	-84.9	-84.9	0.12 (1)	10.00
U- B	-1688 / 0	0.0	0.0	0.22 (1)	6.39
M- K	-1706 / 0	0.0	0.0	0.22 (1)	6.36
U- T	0 / 0	-18.5	-18.5	0.09 (4)	10.00
T- S	0 / 769	-18.5	-18.5	0.18 (1)	10.00
S- R	0 / 1371	-18.5	-18.5	0.27 (1)	10.00
R- Q	0 / 2244	-18.5	-18.5	0.37 (1)	10.00
Q- P	0 / 1913	-18.5	-18.5	0.38 (1)	10.00
P- O	0 / 1913	-18.5	-18.5	0.38 (1)	10.00
O- N	0 / 840	-18.5	-18.5	0.15 (1)	10.00
N- M	0 / 0	-18.5	-18.5	0.02 (4)	10.00

WEBS

MEMB. FR-TO	MAX. FORCE (LBS)	MAX CSI (LC)
T- C	-256 / 0	0.31 (1)
C- S	0 / 1117	0.25 (1)
S- D	-853 / 0	0.34 (1)
D- R	0 / 450	0.10 (1)
R- E	-1902 / 0	0.76 (1)
E- Q	0 / 1747	0.39 (1)
Q- F	-284 / 0	0.16 (1)
Q- H	0 / 417	0.09 (1)
P- H	0 / 115	0.04 (4)
H- O	-1239 / 0	0.50 (1)
O- J	0 / 626	0.14 (1)
N- J	-1153 / 0	0.39 (1)
B- T	0 / 848	0.19 (1)
N- K	0 / 884	0.20 (1)
O- I	0 / 1135	0.26 (1)

DESIGN CRITERIA

SPECIFIED LOADS:

TOP CH.	LL	=	23.3	PSF
	DL	=	6.0	PSF
BOT CH.	LL	=	0.0	PSF
	DL	=	7.4	PSF
TOTAL LOAD		=	36.7	PSF

SPACING = 24.0 IN. C/C

LOADING IN FLAT SECTION BASED ON A SLOPE OF 2.00/12 MINIMUM

THIS TRUSS IS DESIGNED FOR RESIDENTIAL OR SMALL BUILDING REQUIREMENTS OF PART 9, NBCC 2010, NBCC 2015

THIS DESIGN COMPLIES WITH:
- PART 9 OF BCBC 2018 , OBC 2012 , ABC 2019
- CSA 086-09, CSA 086-14
- TPIC 2011, TPIC 2014

DESIGN ASSUMPTIONS
-OVERHANG NOT TO BE ALTERED OR CUT OFF.

(55 % OF 27.2 P.S.F. G.S.L. PLUS 8.4 P.S.F. RAIN LOAD) EQUALS 23.3 P.S.F. SPECIFIED ROOF LIVE LOAD

ALLOWABLE DEFL.(LL)= L/360 (1.03")
CALCULATED VERT. DEFL.(LL) = L/ 999 (0.13")
ALLOWABLE DEFL.(TL)= L/360 (1.03")
CALCULATED VERT. DEFL.(TL) = L/ 999 (0.25")

CSI: TC=0.49/1.00 (F-H:1) , BC=0.38/1.00 (O-P:1) , WB=0.76/1.00 (E-R:1) , SSI=0.22/1.00 (H-I:1)

DOL LUMBER=1.00 NAIL=1.00 LS BEND=1.10 COMP=1.10 SHEAR=1.10 TENS= 1.10

COMPANION LIVE LOAD FACTOR = 1.00

TRUSS PLATE MANUFACTURER IS NOT RESPONSIBLE FOR QUALITY CONTROL IN THE TRUSS MANUFACTURING PLANT .

NAIL VALUES

PLATE	GRIP(DRY) (PSI) MAX	MIN	SHEAR (PLI) MAX	MIN	SECTION (PLI) MAX	MIN
MT20	618	354	1667	788	1987	1656

PLATE PLACEMENT TOL. = 0.250 inches

PLATE ROTATION TOL. = 6.0 Deg.

JSI GRIP= 0.90 (K) (INPUT = 0.90)
JSI METAL= 0.56 (I) (INPUT = 1.00)

JOB NAME	TRUSS NAME	QUANTITY	PLY	JOB DESC.	DRWG NO.
314234	H24T		1	TRUSS DESC. JT-39002	E-19112539

Alpa Roof Truss, Maple

Version 8.300 S Aug 9 2019 MiTek Industries, Inc. Mon Nov 11 08:15:41 2019 Page 1
ID:VRLqmclDiflZCj2mk6F92VyQuye-_xez3YMxfyqTulWvamtrMFalv9KvBYsMZUvG_nyKKK0

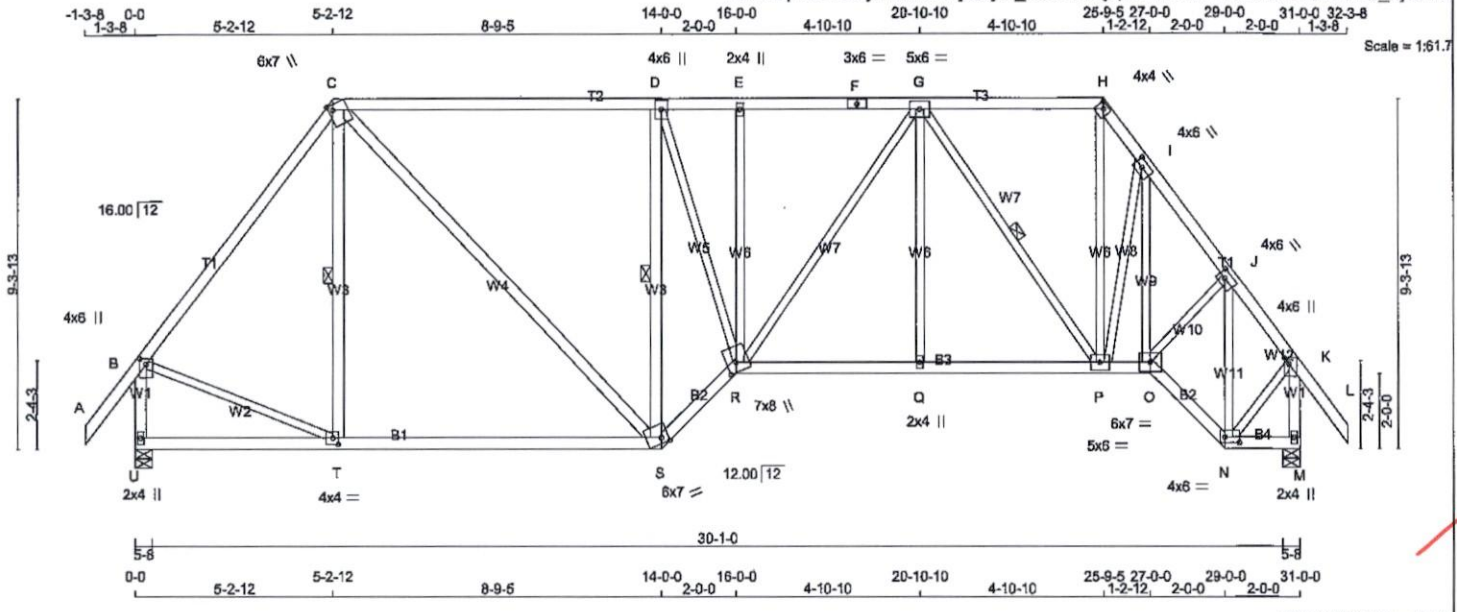

LUMBER
N. L. G. A. RULES

CHORDS	SIZE		LUMBER	DESCR.
A - C	2x4	DRY	No.2	SPF
C - F	2x4	DRY	2100F 1.8E	SPF
F - H	2x4	DRY	2100F 1.8E	SPF
H - L	2x4	DRY	No.2	SPF
U - B	2x4	DRY	No.2	SPF
M - K	2x4	DRY	No.2	SPF
U - S	2x4	DRY	No.2	SPF
S - R	2x4	DRY	No.2	SPF
R - O	2x4	DRY	No.2	SPF
O - N	2x4	DRY	No.2	SPF
N - M	2x4	DRY	No.2	SPF
ALL WEBS	2x3	DRY	No.2	SPF
EXCEPT				
T - C	2x4	DRY	No.2	SPF
C - S	2x4	DRY	No.2	SPF
S - D	2x4	DRY	No.2	SPF

DRY: SEASONED LUMBER.

PLATES (table is in inches)

JT	TYPE	PLATES	W	LEN	Y	X
B	TMVW+p	MT20	4.0	6.0	1.75	2.00
C	TTWW+m	MT20	6.0	7.0	Edge	1.50
D	TMWW+t	MT20	4.0	6.0		
E	TMW+w	MT20	2.0	4.0		
F	TS-t	MT20	3.0	6.0		
G	TMWWW-t	MT20	5.0	6.0		
H	TTW-h	MT20	4.0	4.0	Edge	
I	TMWW-t	MT20	4.0	6.0	2.00	2.50
J	TMWW-t	MT20	4.0	6.0	2.00	2.25
K	TMVW+p	MT20	4.0	6.0	2.00	Edge
M	BMV1+p	MT20	2.0	4.0		
N	BBWW-t	MT20	4.0	6.0	1.75	4.50
O	BBWW-t	MT20	6.0	7.0		
P	BMWWW-t	MT20	5.0	6.0		
Q	BMW+w	MT20	2.0	4.0		
R	BBWWW+m	MT20	7.0	8.0	3.00	3.00
S	BBWW-m	MT20	6.0	7.0	Edge	2.25
T	BMWW-t	MT20	4.0	4.0	2.00	1.75
U	BMV1+p	MT20	2.0	4.0		

NOTE: Lateral brace(s) shown shall be 2x4 SPF #2

LICENSED PROFESSIONAL ENGINEER
11/11/2019
R. TURENNE
100157040
PROVINCE OF ONTARIO

DIMENSIONS, SUPPORTS AND LOADINGS SPECIFIED BY FABRICATOR TO BE VERIFIED BY BUILDING DESIGNER

BEARINGS

JT	FACTORED GROSS REACTION VERT	HORZ	MAXIMUM FACTORED GROSS REACTION DOWN	HORZ	UPLIFT	INPUT BRG IN-SX	REQRD BRG IN-SX
U	1719	0	1719	0	0	5-8	2-9
M	1724	0	1724	0	0	5-8	2-9

UNFACTORED REACTIONS

JT	1ST LCASE COMBINED	MAX./MIN. COMPONENT REACTIONS SNOW	LIVE	PERM.LIVE	WIND	DEAD	SOIL
U	1218	786 / 0	0 / 0	0 / 0	0 / 0	432 / 0	0 / 0
M	1222	789 / 0	0 / 0	0 / 0	0 / 0	433 / 0	0 / 0

BEARING MATERIAL TO BE SPF NO.2 OR BETTER AT JOINT(S) U, M

BRACING
TOP CHORD TO BE SHEATHED OR MAX. PURLIN SPACING = 4.96 FT.
MAX. UNBRACED BOTTOM CHORD LENGTH = 10.00 FT OR RIGID CEILING DIRECTLY APPLIED.

ALL PITCH BREAKS AND PERIMETER CORNER JOINTS MUST BE LATERALLY RESTRAINED.

1 LATERAL BRACE(S) AT 1/ 2 LENGTH OF C-T, D-S, G-P.

END VERTICAL(S) MUST BE SHEATHED OR HAVE BRACES AS INDICATED IN THE MAX. UNBRACED LENGTH COLUMN OF THE TABLE BELOW

LOADING
TOTAL LOAD CASES: (4)

CHORDS

MEMB. FR-TO	MAX. FACTORED FORCE (LBS)	FACTORED VERT. LOAD LC1 (PLF) FROM	TO	MAX CSI (LC)	MAX. UNBRAC LENGTH
A- B	0 / 48	-84.9	-84.9	0.12 (1)	10.00
B- C	-1325 / 0	-84.9	-84.9	0.56 (1)	5.03
C- D	-1440 / 0	-84.9	-84.9	0.68 (1)	5.43
D- E	-1765 / 0	-84.9	-84.9	0.58 (1)	5.00
E- F	-1765 / 0	-84.9	-84.9	0.24 (1)	5.71
F- G	-1765 / 0	-84.9	-84.9	0.24 (1)	5.71
G- H	-1006 / 0	-84.9	-84.9	0.22 (1)	6.25
H- I	-1670 / 0	-84.9	-84.9	0.06 (1)	5.10
I- J	-1746 / 0	-84.9	-84.9	0.12 (1)	4.96
J- K	-1095 / 0	-84.9	-84.9	0.13 (1)	5.89
K- L	0 / 48	-84.9	-84.9	0.12 (1)	10.00
U- B	-1693 / 0	0.0	0.0	0.22 (1)	6.39
M- K	-1706 / 0	0.0	0.0	0.22 (1)	6.36
U- T	0 / 0	-18.5	-18.5	0.31 (4)	10.00
T- S	0 / 790	-18.5	-18.5	0.38 (4)	10.00
S- R	0 / 1991	-18.5	-18.5	0.33 (1)	10.00
R- Q	0 / 1584	-18.5	-18.5	0.31 (1)	10.00
Q- P	0 / 1584	-18.5	-18.5	0.30 (1)	10.00
P- O	0 / 1039	-18.5	-18.5	0.21 (1)	10.00
O- N	0 / 863	-18.5	-18.5	0.15 (1)	10.00
N- M	0 / 0	-18.5	-18.5	0.02 (4)	10.00

WEBS

MEMB. FR-TO	MAX. FACTORED FORCE (LBS)	MAX CSI (LC)
T- C	-123 / 79	0.05 (1)
C- S	0 / 929	0.15 (1)
S- D	-1986 / 0	0.81 (1)
D- R	0 / 1219	0.27 (1)
R- E	0 / 51	0.01 (1)
R- G	0 / 315	0.07 (1)
Q- G	0 / 110	0.04 (4)
G- P	-1028 / 0	0.50 (1)
P- H	0 / 1130	0.25 (1)
P- I	-227 / 0	0.13 (1)
O- I	0 / 135	0.03 (1)
O- J	0 / 663	0.15 (1)
N- J	-1189 / 0	0.41 (1)
B- T	0 / 843	0.19 (1)
N- K	0 / 887	0.20 (1)

DESIGN CRITERIA

SPECIFIED LOADS:

TOP CH.	LL	=	23.3	PSF
	DL	=	6.0	PSF
BOT CH.	LL	=	0.0	PSF
	DL	=	7.4	PSF
TOTAL LOAD		=	36.7	PSF

SPACING = 24.0 IN. C/C

LOADING IN FLAT SECTION BASED ON A SLOPE OF 2.00/12 MINIMUM

THIS TRUSS IS DESIGNED FOR RESIDENTIAL OR SMALL BUILDING REQUIREMENTS OF PART 9, NBCC 2010, NBCC 2015

THIS DESIGN COMPLIES WITH:
- PART 9 OF BCBC 2018 , OBC 2012 , ABC 2019
- CSA 086-09, CSA 086-14
- TPIC 2011, TPIC 2014

DESIGN ASSUMPTIONS
-OVERHANG NOT TO BE ALTERED OR CUT OFF.

(55 % OF 27.2 P.S.F. G.S.L. PLUS 8.4 P.S.F. RAIN LOAD) EQUALS 23.3 P.S.F. SPECIFIED ROOF LIVE LOAD

ALLOWABLE DEFL.(LL)= L/360 (1.03")
CALCULATED VERT. DEFL.(LL) = L/ 999 (0.09")
ALLOWABLE DEFL.(TL)= L/360 (1.03")
CALCULATED VERT. DEFL.(TL) = L/ 999 (0.25")

CSI: TC=0.68/1.00 (C-D:1) , BC=0.38/1.00 (S-T:4) , WB=0.81/1.00 (D-S:1) , SSI=0.34/1.00 (C-D:1)

DOL LUMBER=1.00 NAIL=1.00 LS BEND=1.10 COMP=1.10 SHEAR=1.10 TENS= 1.10

COMPANION LIVE LOAD FACTOR = 1.00

TRUSS PLATE MANUFACTURER IS NOT RESPONSIBLE FOR QUALITY CONTROL IN THE TRUSS MANUFACTURING PLANT .

NAIL VALUES

PLATE	GRIP(DRY) (PSI) MAX	MIN	SHEAR (PLI) MAX	MIN	SECTION (PLI) MAX	MIN
MT20	618	354	1667	788	1987	1656

PLATE PLACEMENT TOL. = 0.250 Inches

PLATE ROTATION TOL. = 5.0 Deg.

JSI GRIP= 0.90 (K) (INPUT = 0.90)
JSI METAL= 0.55 (H) (INPUT = 1.00)

CONTINUED ON PAGE 2

JOB NAME	TRUSS NAME	QUANTITY	PLY	JOB DESC.	DRWG NO.
314234	H25T		1	TRUSS DESC. JT-39002	E-19112540

Alpa Roof Truss, Maple

Version 8.300 S Aug 9 2019 MiTek Industries, Inc. Mon Nov 11 08:15:43 2019 Page 1

ID:VRLqmcIDifZCj2mk6F92VyQuye-wKIjTENCAZ4A73gfiBvJRgfcNz?OfTQf0oON2fyKKK_

Scale = 1:68.5

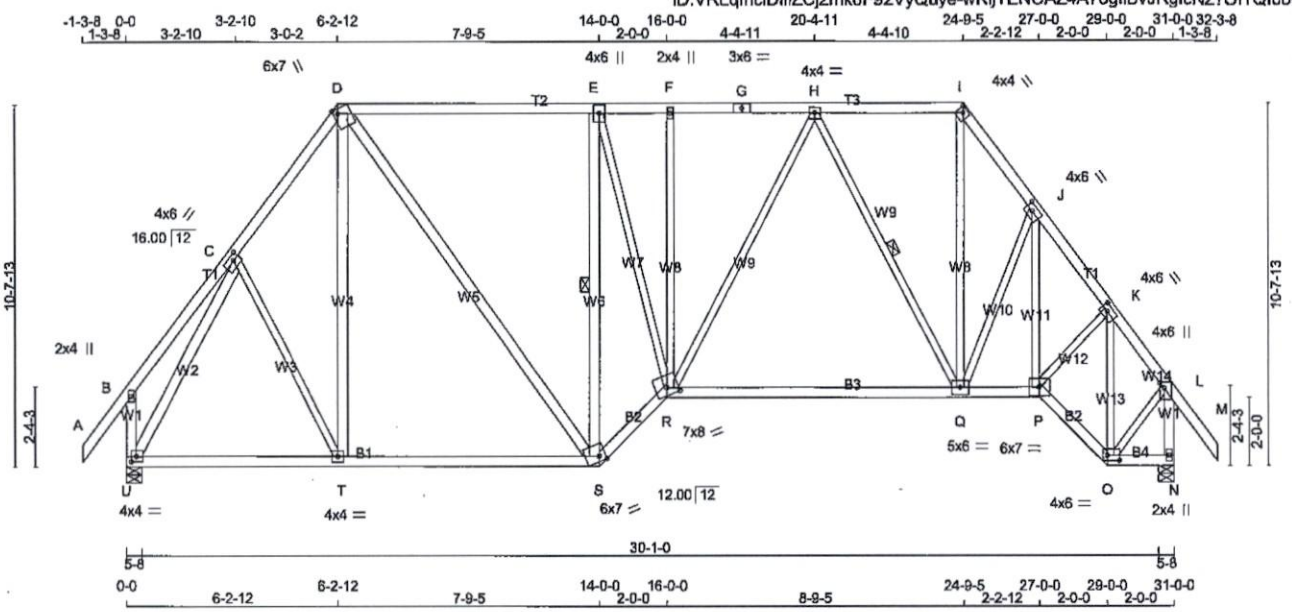

TOTAL WEIGHT = 194 lb

[M]

LUMBER

N. L. G. A. RULES

CHORDS	SIZE		LUMBER	DESCR.
A - D	2x4	DRY	No.2	SPF
D - G	2x4	DRY	No.2	SPF
G - I	2x4	DRY	No.2	SPF
I - M	2x4	DRY	No.2	SPF
U - B	2x4	DRY	No.2	SPF
N - L	2x4	DRY	No.2	SPF
U - S	2x4	DRY	No.2	SPF
S - R	2x4	DRY	No.2	SPF
R - P	2x4	DRY	No.2	SPF
P - O	2x4	DRY	No.2	SPF
O - N	2x4	DRY	No.2	SPF
ALL WEBS	2x3	DRY	No.2	SPF
EXCEPT				
T - D	2x4	DRY	No.2	SPF
D - S	2x4	DRY	No.2	SPF
S - E	2x4	DRY	1650F 1.5E	SPF
U - C	2x4	DRY	1650F 1.5E	SPF

DRY: SEASONED LUMBER.

PLATES (table is in inches)

JT	TYPE	PLATES	W	LEN	Y	X
B	TMV+p	MT20	2.0	4.0		
C	TMWW-t	MT20	4.0	6.0	1.75	2.25
D	TTWW+m	MT20	6.0	7.0	Edge	1.50
E	TMWW+t	MT20	4.0	6.0		
F	TMW+w	MT20	2.0	4.0		
G	TS-t	MT20	3.0	6.0		
H	TMWW-t	MT20	4.0	4.0		
I	TTW-h	MT20	4.0	4.0	Edge	
J	TMWW-t	MT20	4.0	6.0	2.00	2.50
K	TMWW-t	MT20	4.0	6.0	2.00	2.25
L	TMW+p	MT20	4.0	6.0	2.00	Edge
N	BMV1+p	MT20	2.0	4.0		
O	BBWW-l	MT20	4.0	6.0	1.75	4.50
P	BBWW-l	MT20	6.0	7.0		
Q	BMWWW-t	MT20	5.0	6.0		
R	BBWWW-m	MT20	7.0	8.0	2.75	4.00
S	BBWW-m	MT20	6.0	7.0	Edge	2.25
T	BMWW-t	MT20	4.0	4.0		
U	BMVW1-t	MT20	4.0	4.0	1.75	1.75

NOTE: Lateral brace(s) shown shall be 2x4 SPF #2

LICENSED PROFESSIONAL ENGINEER
11/11/2019
R. TURENNE
100157040
PROVINCE OF ONTARIO

DIMENSIONS, SUPPORTS AND LOADINGS SPECIFIED BY FABRICATOR TO BE VERIFIED BY BUILDING DESIGNER

BEARINGS

JT	FACTORED GROSS REACTION VERT	HORZ	MAXIMUM FACTORED GROSS REACTION DOWN	HORZ	UPLIFT	INPUT BRG IN-SX	REQRD BRG IN-SX
N	1724	0	1724	0	0	5-8	2-9
U	1719	0	1719	0	0	5-8	1-14

UNFACTORED REACTIONS

JT	1ST LCASE COMBINED	MAX./MIN. COMPONENT REACTIONS SNOW	LIVE	PERM.LIVE	WIND	DEAD	SOIL
N	1222	789 / 0	0 / 0	0 / 0	0 / 0	433 / 0	0 / 0
U	1218	786 / 0	0 / 0	0 / 0	0 / 0	432 / 0	0 / 0

BEARING MATERIAL TO BE SPF NO.2 OR BETTER AT JOINT(S) N, U

BRACING

TOP CHORD TO BE SHEATHED OR MAX. PURLIN SPACING = 4.15 FT.
MAX. UNBRACED BOTTOM CHORD LENGTH = 10.00 FT OR RIGID CEILING DIRECTLY APPLIED.

ALL PITCH BREAKS AND PERIMETER CORNER JOINTS MUST BE LATERALLY RESTRAINED.

1 LATERAL BRACE(S) AT 1/ 2 LENGTH OF E-S, H-Q.

END VERTICAL(S) MUST BE SHEATHED OR HAVE BRACES AS INDICATED IN THE MAX. UNBRACED LENGTH COLUMN OF THE TABLE BELOW

LOADING

TOTAL LOAD CASES: (4)

CHORDS

MEMB. FR-TO	MAX. FACTORED FORCE (LBS)	FACTORED VERT. LOAD (PLF) FROM	TO	LC1	MAX CSI (LC)	MAX. UNBRAC LENGTH
A- B	0 / 48	-84.9	-84.9	0.12 (1)	10.00	
B- C	0 / 24	-84.9	-84.9	0.13 (1)	10.00	
C- D	-1336 / 0	-84.9	-84.9	0.16 (1)	5.44	
D- E	-1239 / 0	-84.9	-84.9	0.81 (1)	4.50	
E- F	-1482 / 0	-84.9	-84.9	0.70 (1)	4.15	
F- G	-1482 / 0	-84.9	-84.9	0.30 (1)	5.03	
G- H	-1482 / 0	-84.9	-84.9	0.30 (1)	5.03	
H- I	-977 / 0	-84.9	-84.9	0.28 (1)	5.92	
I- J	-1633 / 0	-84.9	-84.9	0.08 (1)	5.12	
J- K	-1740 / 0	-84.9	-84.9	0.09 (1)	4.99	
K- L	-1095 / 0	-84.9	-84.9	0.13 (1)	5.88	
L- M	0 / 48	-84.9	-84.9	0.12 (1)	10.00	
U- B	-218 / 0	0.0	0.0	0.03 (1)	7.81	
N- L	-1706 / 0	0.0	0.0	0.22 (1)	6.36	
U- T	0 / 737	-18.5	-18.5	0.33 (4)	10.00	
T- S	0 / 784	-18.5	-18.5	0.34 (4)	10.00	
S- R	0 / 1718	-18.5	-18.5	0.29 (1)	10.00	
R- Q	0 / 1344	-18.5	-18.5	0.44 (4)	10.00	
Q- P	0 / 1046	-18.5	-18.5	0.42 (4)	10.00	
P- O	0 / 860	-18.5	-18.5	0.15 (1)	10.00	
O- N	0 / 0	-18.5	-18.5	0.02 (4)	10.00	

WEBS

MEMB. FR-TO	MAX. FACTORED FORCE (LBS)	MAX CSI (LC)
C- T	0 / 94	0.02 (4)
T- D	0 / 123	0.03 (4)
D- S	0 / 756	0.12 (1)
S- E	-1741 / 0	0.74 (1)
E- R	0 / 1071	0.24 (1)
R- F	0 / 4	0.00 (4)
R- H	0 / 298	0.07 (1)
Q- I	0 / 1075	0.24 (1)
Q- J	-218 / 0	0.13 (1)
P- J	0 / 89	0.02 (1)
P- K	0 / 678	0.15 (1)
O- K	-1185 / 0	0.40 (1)
U- C	-1635 / 0	0.74 (1)
O- L	0 / 883	0.20 (1)
H- Q	-803 / 0	0.50 (1)

DESIGN CRITERIA

SPECIFIED LOADS:

TOP CH.	LL	=	23.3	PSF
	DL	=	6.0	PSF
BOT CH.	LL	=	0.0	PSF
	DL	=	7.4	PSF
TOTAL LOAD		=	36.7	PSF

SPACING = 24.0 IN. C/C

LOADING IN FLAT SECTION BASED ON A SLOPE OF 2.00/12 MINIMUM

THIS TRUSS IS DESIGNED FOR RESIDENTIAL OR SMALL BUILDING REQUIREMENTS OF PART 9, NBCC 2010, NBCC 2015

THIS DESIGN COMPLIES WITH:
- PART 9 OF BCBC 2018 , OBC 2012 , ABC 2019
- CSA 086-09, CSA 086-14
- TPIC 2011, TPIC 2014

DESIGN ASSUMPTIONS
-OVERHANG NOT TO BE ALTERED OR CUT OFF.

(55 % OF 27.2 P.S.F. G.S.L. PLUS 8.4 P.S.F. RAIN LOAD) EQUALS 23.3 P.S.F. SPECIFIED ROOF LIVE LOAD

ALLOWABLE DEFL.(LL)= L/360 (1.03")
CALCULATED VERT. DEFL.(LL) = L/ 999 (0.09")
ALLOWABLE DEFL.(TL)= L/360 (1.03")
CALCULATED VERT. DEFL.(TL) = L/ 999 (0.27")

CSI: TC=0.81/1.00 (D-E:1) , BC=0.44/1.00 (Q-R:4) , WB=0.74/1.00 (E-S:1) , SSI=0.30/1.00 (D-E:1)

DOL LUMBER=1.00 NAIL=1.00 LS BEND=1.10 COMP=1.10 SHEAR=1.10 TENS= 1.10

COMPANION LIVE LOAD FACTOR = 1.00

AUTOSOLVE RIGHT HEEL ONLY

TRUSS PLATE MANUFACTURER IS NOT RESPONSIBLE FOR QUALITY CONTROL IN THE TRUSS MANUFACTURING PLANT .

NAIL VALUES

PLATE	GRIP(DRY) (PSI) MAX	MIN	SHEAR (PLI) MAX	MIN	SECTION (PLI) MAX	MIN
MT20	618	354	1667	788	1987	1656

PLATE PLACEMENT TOL. = 0.250 Inches

PLATE ROTATION TOL. = 5.0 Deg.

JSI GRIP= 0.90 (L) (INPUT = 0.90)
JSI METAL= 0.52 (I) (INPUT = 1.00)

CONTINUED ON PAGE 2

JOB NAME	TRUSS NAME	QUANTITY	PLY	JOB DESC.		DRWG NO.
314234	J01T		1	TRUSS DESC.	JT-39002	E-19112541

Alpa Roof Truss, Maple

Version 8.300 S Aug 9 2019 MiTek Industries, Inc. Mon Nov 11 08:15:44 2019 Page 1
ID:VRLqmclDiflZCj2mk6F92VyQuye-OWJ5haOqxtC1lCFUGvRY_uCx_MRpO5ToFR8wZ5yKKJz

Scale = 1:33.7

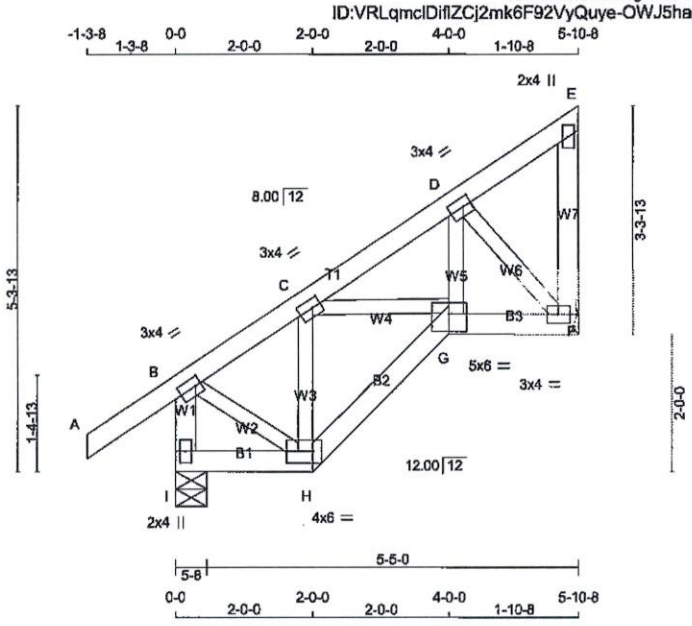

TOTAL WEIGHT = 7 X 30 = 209 lb

LUMBER
N. L. G. A. RULES

CHORDS	SIZE		LUMBER	DESCR.
I - B	2x4	DRY	No.2	SPF
A - E	2x4	DRY	No.2	SPF
F - E	2x4	DRY	No.2	SPF
I - H	2x4	DRY	No.2	SPF
H - G	2x4	DRY	No.2	SPF
G - F	2x4	DRY	No.2	SPF
ALL WEBS	2x3	DRY	No.2	SPF

DRY: SEASONED LUMBER.

PLATES (table is in inches)

JT	TYPE	PLATES	W	LEN	Y	X
B	TMWW-t	MT20	3.0	4.0	1.50	1.00
C	TMWW-t	MT20	3.0	4.0	1.50	1.50
D	TMWW-t	MT20	3.0	4.0	1.50	1.50
E	TMV+p	MT20	2.0	4.0		
F	BMWW1-t	MT20	3.0	4.0		
G	BBWW-l	MT20	5.0	6.0	3.00	3.00
H	BBWW-l	MT20	4.0	6.0	2.00	4.50
I	BMV1+p	MT20	2.0	4.0		

NOTE: Lateral brace(s) shown shall be 2x4 SPF #2

LICENSED PROFESSIONAL ENGINEER
11/11/2019
R. TURENNE
100157040
PROVINCE OF ONTARIO

DIMENSIONS, SUPPORTS AND LOADINGS SPECIFIED BY FABRICATOR TO BE VERIFIED BY BUILDING DESIGNER

BEARINGS

JT	FACTORED GROSS REACTION VERT	HORZ	MAXIMUM FACTORED GROSS REACTION DOWN	HORZ	UPLIFT	INPUT BRG IN-SX	REQRD BRG IN-SX
I	434	0	434	0	0	5-8	1-8
F	290	0	290	0	0	MECHANICAL	

A SUITABLE HANGER/MECHANICAL CONNECTION IS REQUIRED AT JOINT F. MINIMUM BEARING LENGTH AT JOINT F = 1-8.

UNFACTORED REACTIONS

JT	1ST LCASE COMBINED	MAX./MIN. COMPONENT REACTIONS SNOW	LIVE	PERM.LIVE	WIND	DEAD	SOIL
I	305	208 / 0	0 / 0	0 / 0	0 / 0	97 / 0	0 / 0
F	206	129 / 0	0 / 0	0 / 0	0 / 0	77 / 0	0 / 0

BEARING MATERIAL TO BE SPF NO.2 OR BETTER AT JOINT(S) I

BRACING
TOP CHORD TO BE SHEATHED OR MAX. PURLIN SPACING = 6.25 FT.
MAX. UNBRACED BOTTOM CHORD LENGTH = 10.00 FT OR RIGID CEILING DIRECTLY APPLIED.

ALL PITCH BREAKS AND PERIMETER CORNER JOINTS MUST BE LATERALLY RESTRAINED.

LOADING
TOTAL LOAD CASES: (4)

CHORDS

MEMB. FR-TO	MAX. FACTORED FORCE (LBS)	FACTORED VERT. LOAD LC1 (PLF) FROM	TO	MAX CSI (LC)	MAX. UNBRAC LENGTH
I-B	-415 / 0	0.0	0.0	0.04 (1)	7.81
A-B	0 / 32	-84.9	-84.9	0.11 (1)	10.00
B-C	-204 / 0	-84.9	-84.9	0.11 (1)	6.25
C-D	-264 / 0	-84.9	-84.9	0.05 (1)	6.25
D-E	-11 / 0	-84.9	-84.9	0.05 (1)	6.25
F-E	-56 / 0	0.0	0.0	0.01 (1)	7.81
I-H	0 / 0	-18.5	-18.5	0.02 (4)	10.00
H-G	0 / 204	-18.5	-18.5	0.05 (1)	10.00
G-F	0 / 215	-18.5	-18.5	0.05 (1)	10.00

WEBS

MEMB. FR-TO	MAX. FACTORED FORCE (LBS)	MAX CSI (LC)
B-H	0 / 173	0.04 (1)
H-C	-188 / 0	0.03 (1)
C-G	0 / 81	0.02 (1)
G-D	0 / 172	0.04 (1)
D-F	-308 / 0	0.05 (1)

DESIGN CRITERIA

SPECIFIED LOADS:

TOP CH.	LL =	23.3	PSF
	DL =	6.0	PSF
BOT CH.	LL =	0.0	PSF
	DL =	7.4	PSF
TOTAL LOAD	=	36.7	PSF

SPACING = 24.0 IN. C/C

THIS TRUSS IS DESIGNED FOR RESIDENTIAL OR SMALL BUILDING REQUIREMENTS OF PART 9, NBCC 2010, NBCC 2015

THIS DESIGN COMPLIES WITH:
- PART 9 OF BCBC 2018 , OBC 2012 , ABC 2019
- CSA 086-09, CSA 086-14
- TPIC 2011, TPIC 2014

DESIGN ASSUMPTIONS
-OVERHANG NOT TO BE ALTERED OR CUT OFF.

(55 % OF 27.2 P.S.F. G.S.L. PLUS 8.4 P.S.F. RAIN LOAD) EQUALS 23.3 P.S.F. SPECIFIED ROOF LIVE LOAD

ALLOWABLE DEFL.(LL)= L/360 (0.20")
CALCULATED VERT. DEFL.(LL) = L/ 999 (0.00")
ALLOWABLE DEFL.(TL)= L/360 (0.20")
CALCULATED VERT. DEFL.(TL) = L/ 999 (0.01")

CSI: TC=0.11/1.00 (A-B:1) , BC=0.05/1.00 (F-G:1) , WB=0.05/1.00 (D-F:1) , SSI=0.08/1.00 (A-B:1)

DOL LUMBER=1.00 NAIL=1.00 LS BEND=1.10 COMP=1.10 SHEAR=1.10 TENS= 1.10

COMPANION LIVE LOAD FACTOR = 1.00

TRUSS PLATE MANUFACTURER IS NOT RESPONSIBLE FOR QUALITY CONTROL IN THE TRUSS MANUFACTURING PLANT .

NAIL VALUES

PLATE	GRIP(DRY) (PSI) MAX	MIN	SHEAR (PLI) MAX	MIN	SECTION (PLI) MAX	MIN
MT20	618	354	1667	788	1987	1656

PLATE PLACEMENT TOL. = 0.250 inches

PLATE ROTATION TOL. = 5.0 Deg.

JSI GRIP= 0.56 (B) (INPUT = 0.90)
JSI METAL= 0.12 (B) (INPUT = 1.00)

SIMPSON Strong-Tie

May 27, 2019

Re: Expiration Date for Technical Bulletins Extended to 12/31/2019

Please be advised that the expiration date of the Technical Bulletins listed below has been extended until December 31, 2019.

T-SPECCP17	T-SPECH17	T-SPECDSHGUS17R
T-SPECHGUS17-R	T-SPECHHUS17-R	T-SPECHUS17
T-SPECLF17	T-SPECLT17	T-SPECLU17
T-SPECCLUL17	T-SPECLUS17	T-SPECSUR17
T-SPECTBE17	T-SPECTC17	T-SPECTHGB17
T-SPECTHGBHV17	T-SPECTHGQ17	T-SPECTHGW17
T-SPECLSULSSU17	T-SPECHTHGQ17	T-SPECSTHGQ17

Should you have any questions or concerns regarding the above, please contact me at your convenience.

Sincerely,

Brent Bunting, P.Eng.
Simpson Strong-Tie Canada, Ltd.

LICENSED PROFESSIONAL ENGINEER
5/28/2019
B. D. BUNTING
PROVINCE OF ONTARIO

TECHNICAL BULLETIN

LUS – Double Shear Joist Hangers

SIMPSON Strong-Tie®

All LUS hangers have double shear nailing. This patented innovation distributes the load through two points on each joist nail for greater strength. It also allows the use of fewer nails, faster installation and the use of common nails for all connections.

Material: 18 gauge

Finish: G90 galvanized

Design:

- Factored resistances are in accordance with CSA O86-14.
- Uplift resistances have been increased 15%. No further increase is permitted.
- Wood shear is not considered in the factored resistances given. The specifier must ensure that the joist and header capacities are capable of withstanding these loads.

Installation:

- Use all specified fasteners.
- Nails: 16d = 0.162" dia. x 3½" long common wire, 10d = 0.148" x 3" long common wire.
- Double shear nails must be driven at an angle through the joist or truss into the header to achieve the table loads.
- Not designed for welded or nailer applications.

Options:

- These hangers cannot be modified

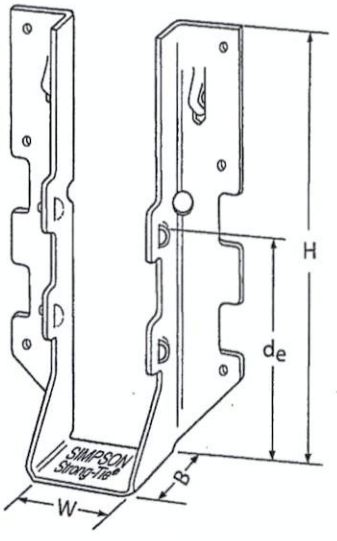

LUS28

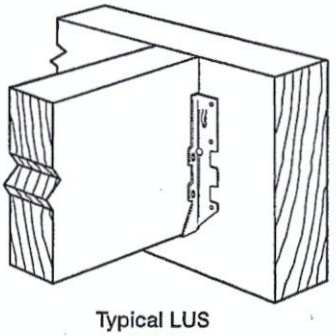

Typical LUS Installation

Model No.	Ga.	Dimensions (in.)				Fasteners		Factored Resistance (lb.)			
								D.Fir-L		S-P-F	
		W	H	B	d_e[1]	Face	Joist	Uplift (K_D=1.15)	Normal (K_D=1.00)	Uplift (K_D=1.15)	Normal (K_D=1.00)
LUS24	18	1 9/16	3 1/8	1 3/4	1 15/16	(4) 10d	(2) 10d	710	1630	645	1155
LUS24-2	18	3 1/8	3 1/8	2	1 13/16	(4) 16d	(2) 16d	835	2020	590	1435
LUS26	18	1 9/16	4 3/4	1 3/4	3 5/8	(4) 10d	(4) 10d	1420	2170	1290	1630
LUS26-2	18	3 1/8	4 7/8	2	4	(4) 16d	(4) 16d	1720	2595	1545	1920
LUS26-3	18	4 5/8	4 3/16	2	3 1/4	(4) 16d	(4) 16d	1720	2595	1545	2340
LUS28	18	1 9/16	6 5/8	1 3/4	3 3/4	(6) 10d	(6) 10d	1420	2520	1290	1790
LUS28-2	18	3 1/8	7	2	4	(6) 16d	(4) 16d	1720	3325	1545	2575
LUS28-3	18	4 5/8	6 1/4	2	3 1/4	(6) 16d	(4) 16d	1720	3325	1545	2375
LUS210	18	1 9/16	7 13/16	1 3/4	3 7/8	(8) 10d	(4) 10d	1420	2785	1290	2210
LUS210-2	18	3 1/8	9	2	6	(8) 16d	(6) 16d	2580	4500	2320	3195
LUS210-3	18	4 5/8	8 3/16	2	5 1/4	(8) 16d	(6) 16d	2580	3345	2320	2375

1. d_e is the distance from the seat of the hanger to the highest joist nail.

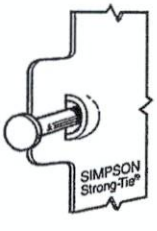

Dome Double Shear Nailing prevents tabs breaking off (available on some models).

U.S. Patent 5,603,580

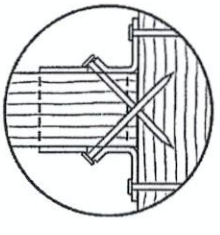

Double Shear Nailing Top View.

LICENSED PROFESSIONAL ENGINEER
4/5/2017
B. D. BUNTING
PROVINCE OF ONTARIO

LIMIT STATES DESIGN

This technical bulletin is effective until June 30, 2019, and reflects information available as of March 1, 2017. This information is updated periodically and should not be relied upon after June 30, 2019. Contact Simpson Strong-Tie for current information and limited warranty or see strongtie.com.

© 2017 Simpson Strong-Tie Company Inc.

T-SPECLUS17 3/17 exp. 6/19

(800) 999-5099
strongtie.com

HUS/LJS – Double Shear Joist Hangers

SIMPSON Strong-Tie®

All hangers have double shear nailing. This patented innovation distributes the load through two points on each joist nail for greater strength. It also allows the use of fewer nails, faster installation and the use of common nails for all connections. Do not bend or remove tabs.

Material: See table

Finish: G90 galvanized

Design:

- Factored resistances are in accordance with CSA O86 -14.
- Uplift resistances have been increased 15%. No further increase is permitted.
- Wood shear is not considered in the factored resistances given. The specifier must ensure that the joist and header capacities are capable of withstanding these loads.

Installation:

- Use all specified fasteners
- Nails: 16d = 0.162" dia. x 3½" long common wire
- Double shear nails must be driven at an angle through the joist or truss into the header to achieve the table loads
- Not designed for welded or nailer applications

Options:

- See current catalogue for options

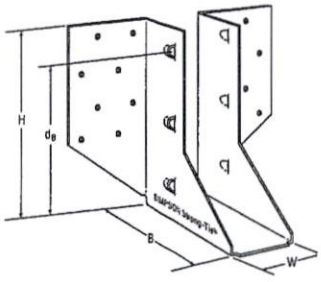

LJS26DS

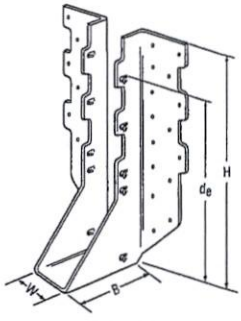

HUS210
(HUS26, HUS28, similar)

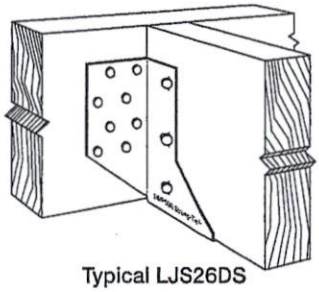

Typical LJS26DS Installation

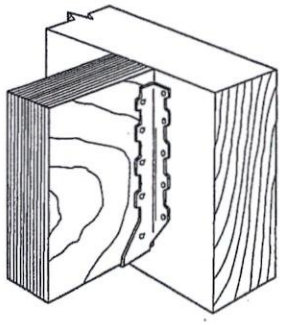

Typical HUS Installation

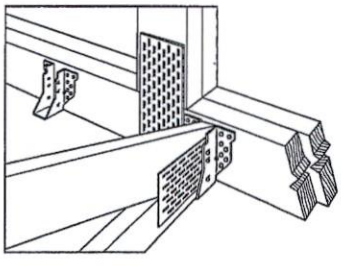

Typical HUS Installation
(Truss Designer to provide fastener quantity for connecting multiple members together)

Model No.	Ga.	Dimensions (in.)				Fasteners		Factored Resistance (lb.)			
								D.Fir-L		S-P-F	
		W	H	B	d_e[1]	Face	Joist	Uplift (K_D=1.15)	Normal (K_D=1.00)	Uplift (K_D=1.15)	Normal (K_D=1.00)
								lb.	lb.	lb.	lb.
LJS26DS	18	1 9/16	5	3½	4⅝	(16) 16d	(6) 16d	2055	4265	1460	4115
HUS26	16	1⅝	5⅜	3	3 15/16	(14) 16d	(6) 16d	2705	4940	2065	3875
HUS28	16	1⅝	7 3/32	3	6 3/32	(22) 16d	(8) 16d	3605	5365	2675	4345
HUS210	16	1⅝	9 3/32	3	7 31/32	(30) 16d	(10) 16d	4505	5795	4010	4740
HUS1.81/10	16	1 13/16	9	3	8	(30) 16d	(10) 16d	4505	6450	4010	5200

1. d_e is the distance from the seat of the hanger to the highest joist nail.

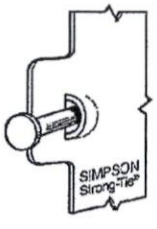

Dome Double Shear Nailing prevents tabs breaking off (available on some models).

U.S. Patent 5,603,580

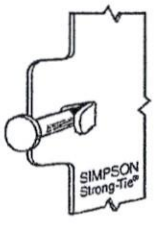

Double Shear Nailing Side View. Do not bend tab back.

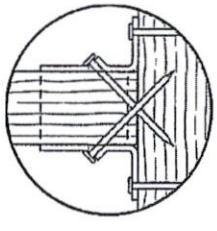

Double Shear Nailing Top View.

LIMIT STATES DESIGN

This technical bulletin is effective until June 30, 2019, and reflects information available as of March 1, 2017. This information is updated periodically and should not be relied upon after June 30, 2019. Contact Simpson Strong-Tie for current information and limited warranty, or see strongtie.com.

© 2017 Simpson Strong-Tie Company Inc.

(800) 999-5099
strongtie.com

HHUS – Double Shear Joist Hangers

SIMPSON Strong-Tie®

All HHUS hangers have double shear nailing. This patented innovation distributes the load through two points on each joist nail for greater strength. It also allows the use of fewer nails, faster installation and the use of common nails for all connections. Do not bend or remove tabs.

Material: 14 gauge

Finish: G90 galvanized

Design:

- Factored resistances are in accordance with CSA O86-14.
- Uplift resistances have been increased 15%. No further increase is permitted.
- Wood shear is not considered in the factored resistances given. The specifier must ensure that the joist and header capacities are capable of withstanding these loads.

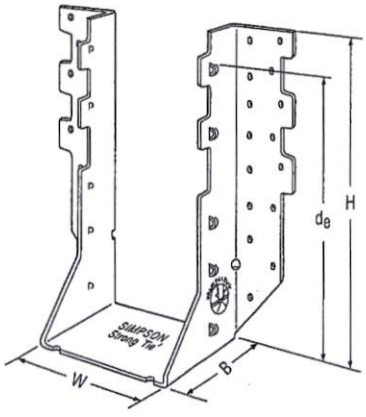

HHUS410

Installation:

- Use all specified fasteners
- Nails: 16d = 0.162" dia. x 3½" long common wire
- Double shear nails must be driven at an angle through the joist or truss into the header to achieve the table loads
- Not designed for welded or nailer applications

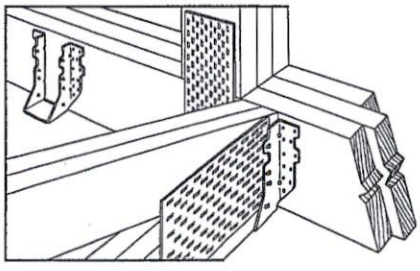

Typical HHUS Installation (Truss Designer to provide fastener quantity for connecting multiple members together)

Options:

- See current catalogue for options

Model No.	Ga.	Dimensions (in.)				Fasteners		Factored Resistance (lb.)			
								D.Fir-L		S-P-F	
		W	H	B	d_e[1]	Face	Joist	Uplift (K_D=1.15)	Normal (K_D=1.00)	Uplift (K_D=1.15)	Normal (K_D=1.00)
HHUS26-2	14	3 5/16	5 13/16	3	3 15/16	(14) 16d	(6) 16d	2850	7335	2065	5205
HHUS28-2	14	3 5/16	7 7/32	3	6 5/32	(22) 16d	(8) 16d	3765	8940	2675	6345
HHUS210-2	14	3 5/16	9 3/32	3	8	(30) 16d	(10) 16d	4745	9660	4310	7000
HHUS210-3	14	4 11/16	9	3	7 15/16	(30) 16d	(10) 16d	4745	10545	4310	7485
HHUS210-4	14	6 1/8	8 29/32	3	7 27/32	(30) 16d	(10) 16d	4745	10545	4310	7485
HHUS46	14	3 5/8	5 13/32	3	3 15/16	(14) 16d	(6) 16d	2540	7335	2065	5205
HHUS48	14	3 5/8	7 1/8	3	6 1/8	(22) 16d	(8) 16d	3765	8945	2267	6345
HHUS410	14	3 5/8	9	3	8	(30) 16d	(10) 16d	4745	9855	4310	7000
HHUS5.50/10	14	5 1/2	9	3	8	(30) 16d	(10) 16d	4745	10545	4310	7485
HHUS7.25/10	14	7 1/4	9	3 5/16	7 29/32	(30) 16d	(10) 16d	4745	10770	4310	7650

1. d_e is the distance from the seat of the hanger to the highest joist nail.

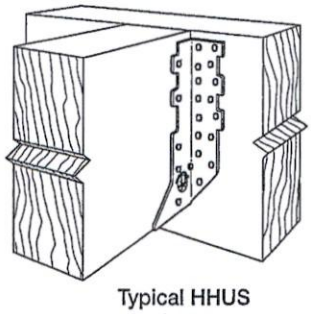

Typical HHUS Installation

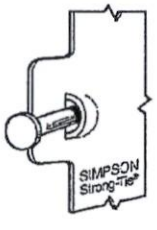

Dome Double Shear Nailing prevents tabs breaking off (available on some models).

U.S. Patent 5,603,580

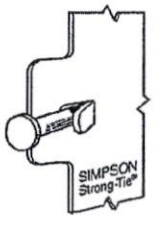

Double Shear Nailing Side View. Do not bend tab back.

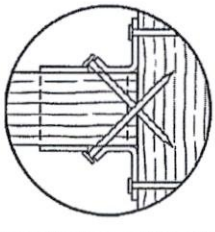

Double Shear Nailing Top View.

LIMIT STATES DESIGN

This technical bulletin is effective until June 30, 2019, and reflects information available as of March 1, 2017. This information is updated periodically and should not be relied upon after June 30, 2019. Contact Simpson Strong-Tie for current information and limited warranty or see strongtie.com.

© 2017 Simpson Strong-Tie Company Inc.

T-SPECHHUS17 3/17 exp. 6/19

(800) 999-5099
strongtie.com

TC – Truss Connectors

SIMPSON Strong-Tie®

The TC truss connector is an ideal connector for scissor trusses and can allow horizontal movement up to 1¼". The TC also attaches plated trusses to top plates or sill plates to resist uplift forces. Typically used on one or both ends of truss as determined by the building designer.

Material: 16 gauge

Finish: G90 galvanized

Design: Factored resistances are in accordance with CSA 086-14

Installation:

- Use all specified fasteners.
- Nails: 10d = 0.148" dia. x 3" long common wire, 10d x 1½ = 0.148" dia. x 1½" long.
- Drive 10d nails into the truss at the inside end of the slotted holes (inside end is towards the centre of the truss) and clinch on the back side. Do not seat these nails into the truss–allow room under the nail head for movement of the truss with respect to the wall.

Optional TC Installation:

- Bend one flange up 90°. Drive specified nails into the top and face of the top plates or install Titen® screws into the top and face of masonry wall. See optional load tables and installation details.

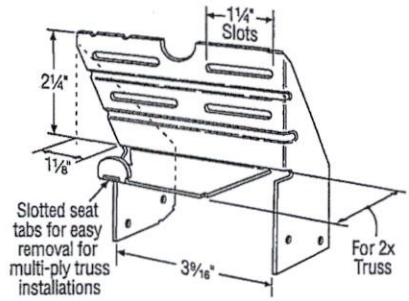

TC24
U.S. Patent 4,932,173

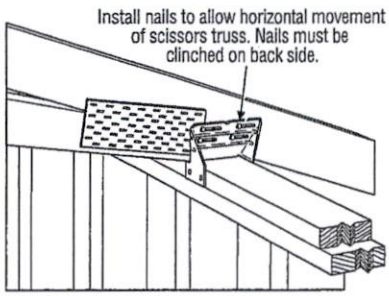

Typical TC24 Installation

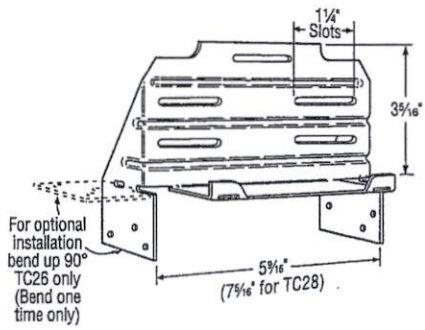

TC26
(TC28 Similiar)

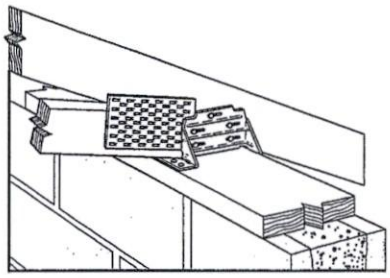

Optional TC26 Installation for Grouted Concrete Block using a Wood Nailer
(8", 10", 12" Wall Installation Similar)

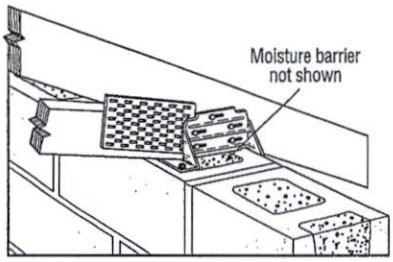

Optional TC26 Installation for Grouted Concrete Block using Titen Screws

Model No.	Fasteners		Factored Resistance	
	Truss	Wall Plates	D.Fir-L	S-P-F
			Uplift (K_D=1.15)	Uplift (K_D=1.15)
			lb.	lb.
TC24	(4) 10d	(4) 10d	605	430
TC26	(5) 10d	(6) 10d	1015	720
TC28	(5) 10d	(6) 10d	1015	720

Optional TC Installation Table

Model No.	Fasteners		Factored Resistance	
	Truss	Wall Plates	D.Fir-L	S-P-F
			Uplift (K_D=1.15)	Uplift (K_D=1.15)
			lb.	lb.
TC26	(5) 10d	(6) 10d x 1½"	810	660
	(5) 10d	(6) 10d	930	660

1. Factored resistances have been increased 15% for earthquake or wind loading; no further increase allowed; reduce where other loads govern.
2. Grout strength is 15 MPa minimum.
3. Optional TC26 installation with 10d nails requires minimum 3" top plate thickness.
4. TC26 fastened to grouted concrete block with (6) – ⁹⁄₁₆" x 2¼" Titen screws has a factored uplift resistance of 275 lb.

LICENSED PROFESSIONAL ENGINEER
4/3/2017
B. D. BUNTING
PROVINCE OF ONTARIO

LIMIT STATES DESIGN

This technical bulletin is effective until June 30, 2019, and reflects information available as of March 1, 2017. This information is updated periodically and should not be relied upon after June 30, 2019. Contact Simpson Strong-Tie for current information and limited warranty or see strongtie.com.

© 2017 Simpson Strong-Tie Company Inc.

(800) 999-5099
strongtie.com

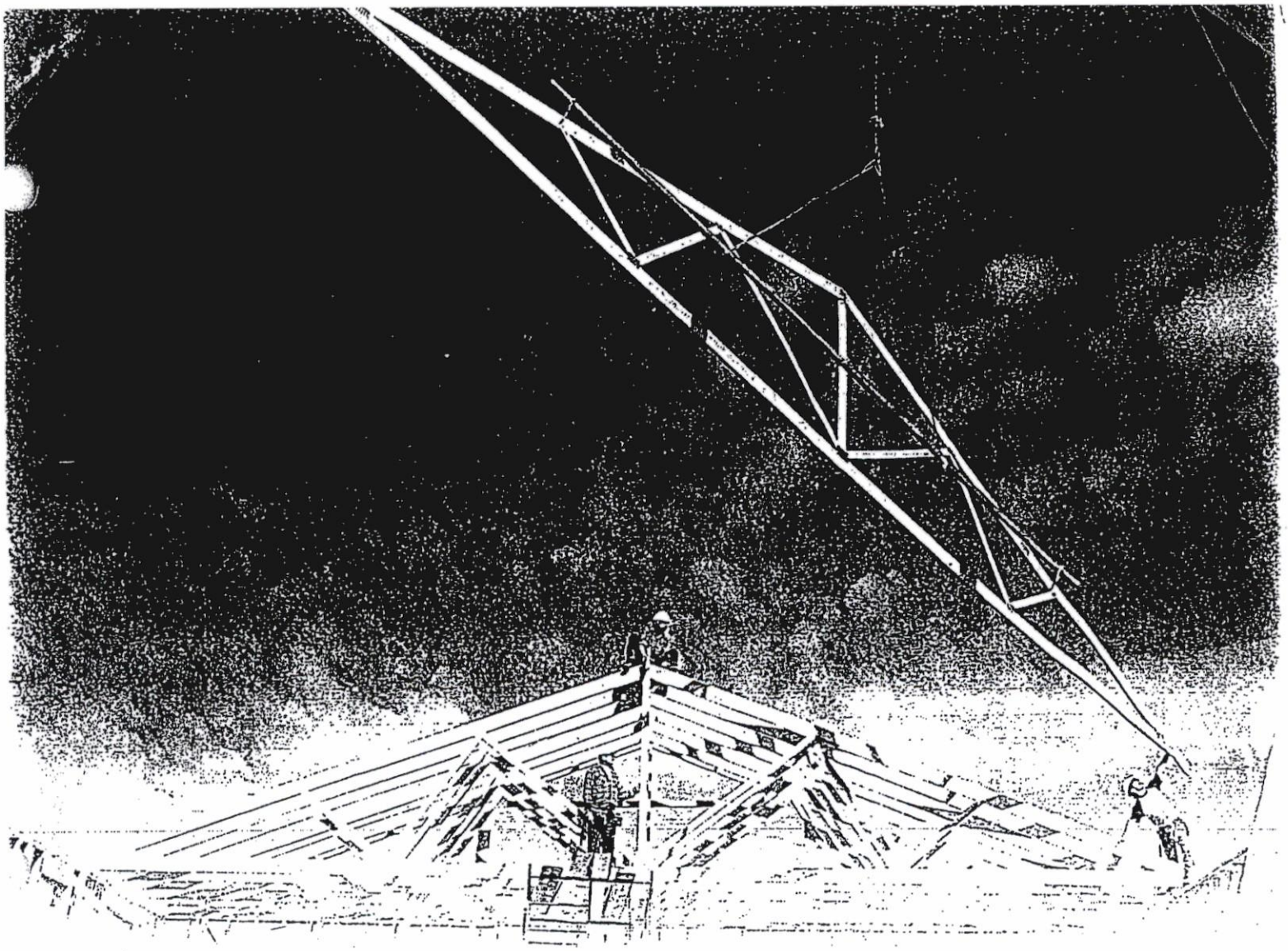

Wood Truss Installation

A Guide to proper handling, erecting and bracing metal plate connected wood trusses

Table of Content

Warning.....4

1 Unloading & Lifting.....5

2 Job Site Handling.....5

3 Hoisting.....6

4 Beginning the Erection Process.....7

5 Erection Tolerance.....8

6 Bracing.....8

7 Bracing Requirements for 3 Planes of Roof.....9

8 Stacking Materials.....10

Caution Notes.....11

Warning

General

Familiarity with the **Construction Design Documents**, the **Truss Design Drawings**, and **Truss Placement Plans** (if required by the **Construction Design Documents**) is required to properly erect, brace, and connect the trusses to the building system.

All of the care and quality involved in the design and manufacture of wood trusses can be jeopardized if the trusses are not properly handled, erected, and braced.

The consequences of improper handling, erecting, and bracing may be a collapse of the structure, which at best is a substantial loss of time and materials, and at worst is a loss of life. The majority of truss accidents occur during truss installation and not as a result of improper design or manufacture.

Prior to truss erection, the builder/erector shall meet with the erection crew for a safety and planning meeting, making sure each crew member understands his or her roles and responsibilities during the erection process.

Temporary Erection Bracing

Trusses are not marked in any way to identify the frequency, or location of temporary erection bracing.

All temporary bracing shall comply with the latest edition of *Commentary and Recommendations for Handling, Installing & Bracing Metal Plate Connected Wood Trusses* (HIB), published by the Truss Plate Institute, and/or as specified in the **Construction Design Documents** prepared by the building designer.

Permanent Truss Bracing

Permanent bracing for the roof or floor trusses is the responsibility of the building designer and should be shown on the **Construction Design Documents**. Permanent bracing locations for individual compression members of a wood truss are shown on the **Truss Design Drawings**, and shall be installed by the building or erection contractor. This bracing is needed for the proper performance of individual trusses within the roof or floor system. The design and connection of the bracing to the truss and then to the overall building system is the responsibility of the building designer, and is in addition to the permanent bracing plan, which is also specified by the building designer.

Special Design Requirements

Special design requirements, such as wind bracing, portal bracing, seismic bracing, diaphragms, shear walls, or other load transfer elements and their connections to wood trusses must be considered separately by the building designer, who shall determine size, location, and method of connections for all bracing as needed to resist these forces.

1 Unloading & Lifting

Never handle trusses flat

Beginning with the unloading process, and throughout all phases of construction, care must be taken to avoid **lateral bending** of trusses, which can cause damage to the lumber and metal connector plates at the joints.

Avoid lateral bending

- **Use special care in windy weather.**
- **If using a crane within 10 feet of an electric line, contact the local power company.**
- **If using a crane within 5 miles of an airport, contact the airport 30 days prior to erection to learn about any safety regulations that must be followed.**

2 Job Site Handling

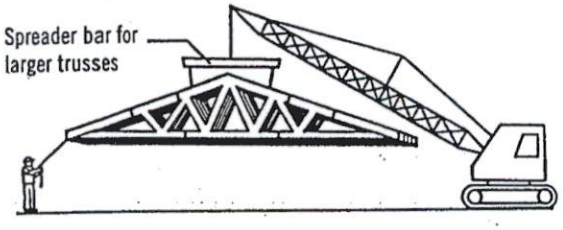

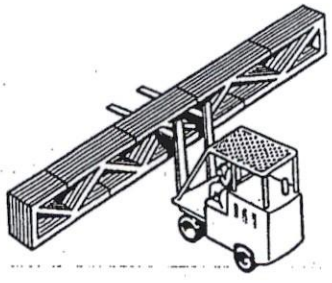

All trusses should be picked up at the top chords in a vertical position only

Proper banding and smooth ground allow for unloading of trusses without damage. This should be done as close to the building site as possible to minimize handling. **Do not** break banding until installation begins. Hand erection of trusses is allowed, provided excessive lateral bending is prevented.

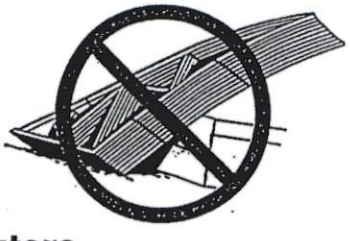

Do not store unbraced bundles upright

If trusses are stored vertically they shall be braced in a manner that will prevent tipping or topping. Generally cuting of the banding is done just prior to installation.

Do not store on uneven ground

If trusses are stored horizontally, blocking should be used on eight to ten foot centers, or as required, to minimize lateral bending and moisture gain.

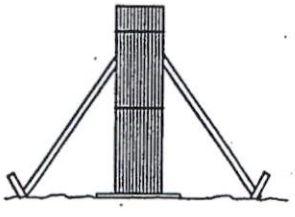

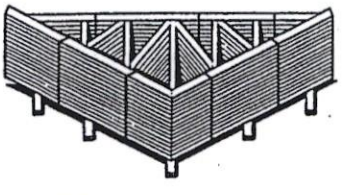

Care should be exercised when removing banding to avoid damaging trusses.

During long term storage, trusses shall be protected from the environment in a manner that provides for adequate ventilation of the trusses. If tarpaulins or other material is used, the ends shall be left open for ventilation. Plastic is not recommended, since it can trap moisture.

3 Hoisting

All trusses that are erected one at a time shall be held safely in position by the erection equipment until such time as all necessary bracing has been installed and the ends of the trusses are securely fastened to the building.

Avoid lateral bending

L ≤ 30'

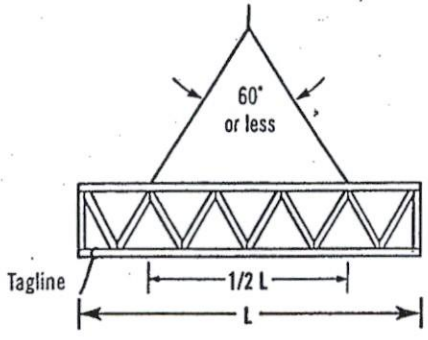

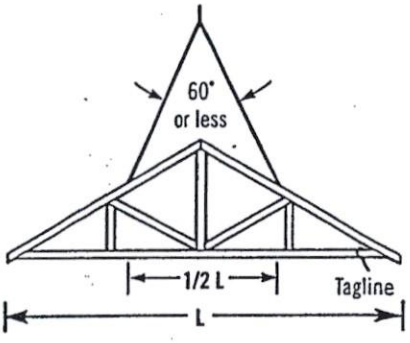

Truss sling is acceptable where these criteria are met.

30' < L ≤ 60'

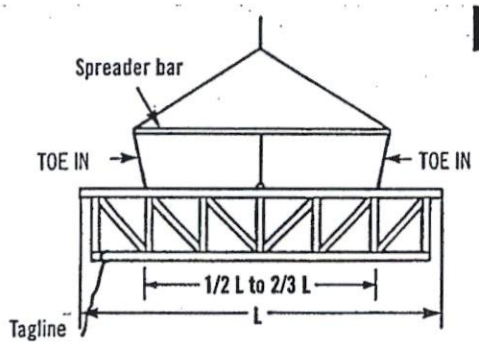

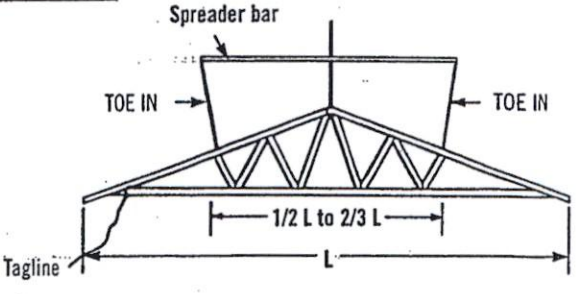

Use spreader bar in all other cases. It should be noted that the lines from the ends of the spreader bar **"TOE IN"**; if these lines should **"TOE OUT"** the truss may fold in half.

L > 60'

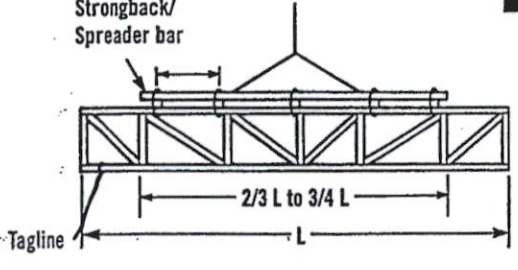

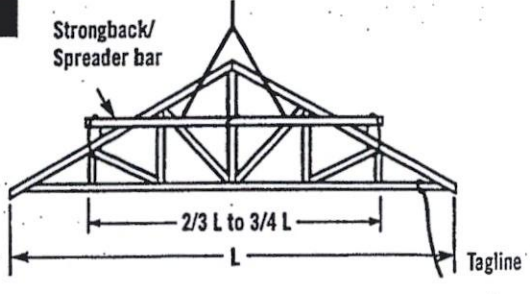

For lifting trusses with spans in excess of 60 feet, it is recommended that a strongback/spreader bar be used as illustrated. The strongback/spreader bar should be attached to the top chord and web members at intervals of approximately 10 feet. Further, the strongback/spreader bar should be at or above the mid-height of the truss to prevent overturning. The strongback/spreader bar can be of any material with sufficient strength to safely carry the weight of the truss and sufficient rigidity to adequately resist bending of the truss.

4 Beginning the Erection Process

It is important for the builder or erection contractor to provide substantial bracing for the first truss erected. The two or more trusses making up the rest of the first set are tied to and rely upon the first truss for stability. Likewise, after this first set of trusses is adequately cross-braced, the remaining trusses installed rely upon this first set for stability. Thus, the performance of the truss bracing system depends to a great extent on how well the first group of trusses is braced.

Ground Brace – Exterior

One satisfactory method ties the first unit of trusses off to a series of braces that are attached to a stake driven into the ground and securely anchored. The ground brace itself should be supported as shown below or it is apt to buckle. Additional ground braces in the opposite direction, inside the building, are also recommended.

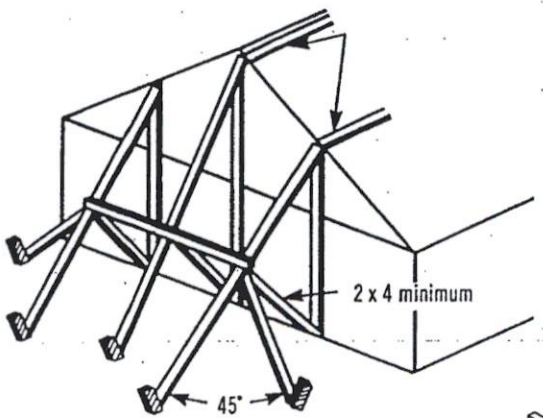

Note: Locate ground braces for first truss directly in line with all rows of top chord continuous lateral bracing (either temporary or permanent).

Ground Brace – Interior

Another satisfactory method where height of building or ground conditions prohibit bracing from the exterior is to tie the first truss rigidly in place from the interior at the floor level, provided the floor is substantially completed and capable of supporting the ground bracing forces. Securely fasten the first truss to the middle of the building. Brace the bracing similar to exterior ground bracing shown at left. Set trusses from the middle toward the end of the building. Properly cross-brace the first set of trusses before removing floor braces and setting remaining trusses.

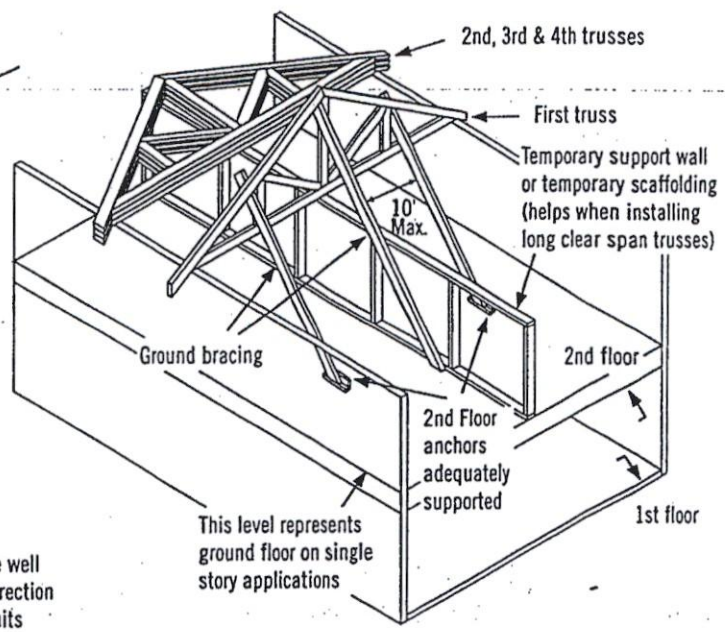

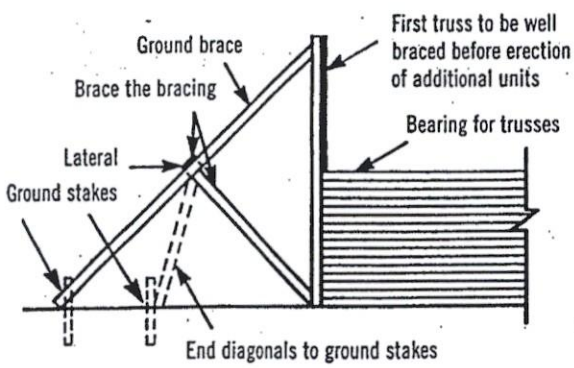

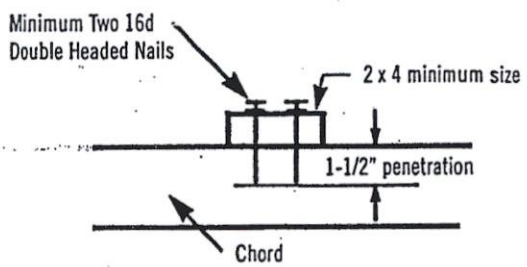

Inadequate size of bracing material or inadequate fastening is a major cause of erection dominoing.

5 Erection Tolerance

Complying with erection tolerances is critical to achieving an acceptable roof or floor line, and to accomplishing effective bracing. Setting trusses within tolerance the first time will prevent the need for the hazardous practice of respacing or adjusting trusses when roof sheathing or roof purlins are installed. Trusses leaning or bowing can cause nails to miss the top chords when sheathing is applied, and create cumulative stresses on the bracing, which is a frequent cause of dominoing.

When sheathing, make sure nails are driven into the top chord of the trusses.

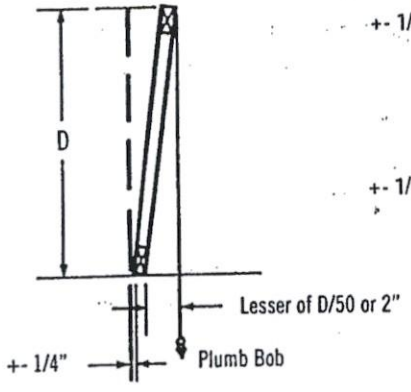

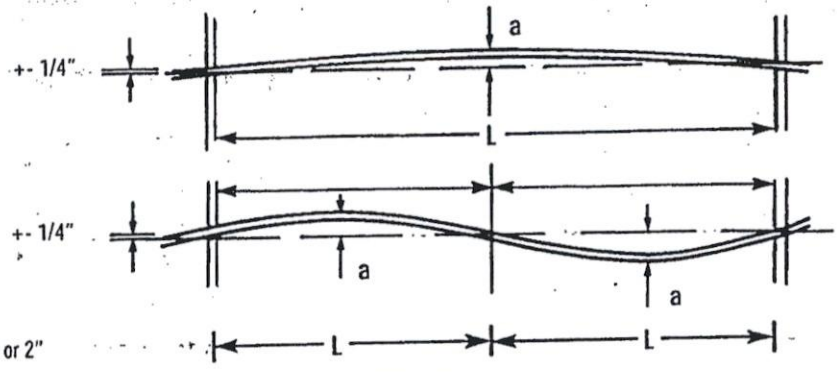

L = 16' to 32', a = 1"
L = 32' & over, a = 2"

6 Bracing

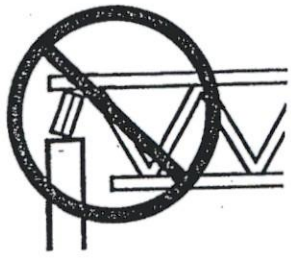

Do not install trusses on temporarily connected supports

Do not walk on unbraced trusses

Do not walk on trusses or gable ends lying flat

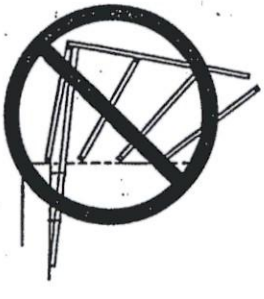

Nails in withdrawal (parallel to force)

All anchors, hangers, tie-downs, seats, bearing ledgers, etc., that are part of the supporting structure shall be accurately and properly placed and permanently attached before truss installation begins. No trusses shall ever be installed on anchors or ties that have temporary connections to the supporting structure.

Nailing scabs to the end of the building to brace the first truss is not recommended.
All nailing of bracing should be done so that nails are driven perpendicular to the direction of force, as shown at right.

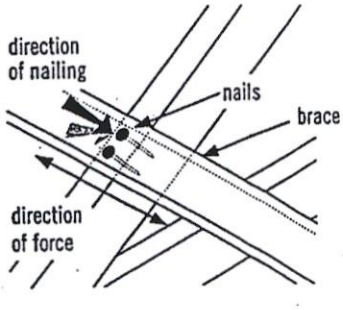

Well nailed (perpendicular to force)

7 Bracing Requirements for 3 Planes of Roof

Temporary erection bracing must be applied to three planes of the roof system to ensure stability: Plane 1) **Top Chord** (sheathing), Plane 2) **Bottom Chord** (ceiling plane), and Plane 3) **Web Member** plane or vertical plane perpendicular to trusses.

1) Top Chord Plane

Most important to the builder or erection contractor is bracing in the plane of the top chord. Truss top chords are susceptible to lateral buckling before they are braced or sheathed.

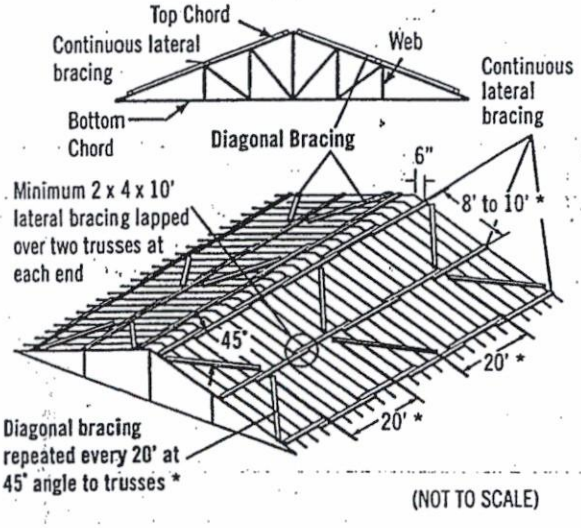

(NOT TO SCALE)

Exact spacing between trusses should be maintained as bracing is installed to avoid the hazardous practice of removing bracing to adjust spacing. This act of "adjusting spacing" can cause trusses to topple if connections are removed at the wrong time.

2) Bottom Chord Plane

In order to hold proper spacing on the bottom chord, temporary bracing is recommended on the top of the bottom chord.

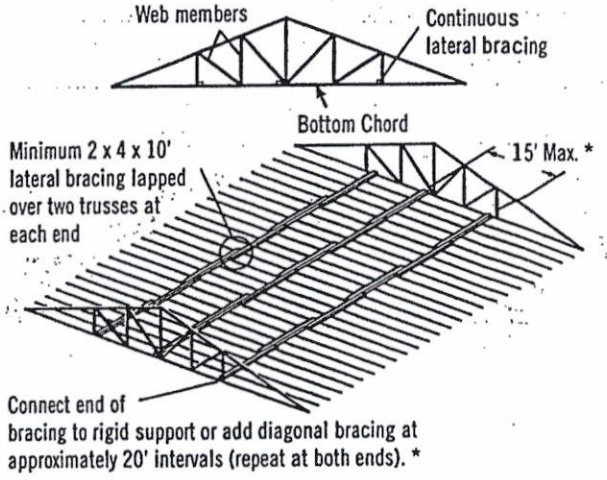

* Long spans, heavy loads or other spacing configurations may require closer spacing between lateral bracing and closer intervals between diagonals. Consult the building designer or HIB and DSB (*Recommended Design Specification for Temporary Bracing of Metal-Plate Connected Wood Trusses*) for details.

Diagonal or cross-bracing is very important!

3) Web Member Plane

"X" bracing, as shown, is critical in preventing trusses from leaning or dominoing. Repeat as shown to create a succession of rigid units.

X-bracing should be installed on vertical web members wherever possible, at or near lateral bracing. Plywood or OSB may be substituted for X-bracing.

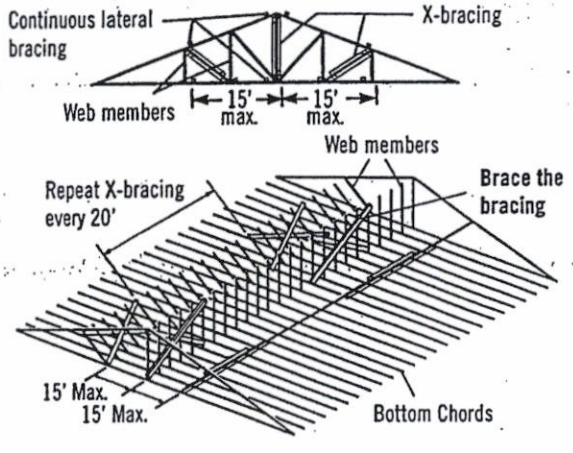

Note: Top chords and some web members are not shown, in order to make drawings more readable.

Do not use short blocks to brace individual trusses without a specific bracing plan detailing their use

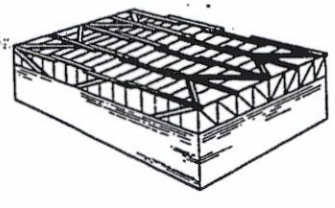

Bracing requirements using the same principles apply to parallel chord trusses

8 Stacking Materials

Do not proceed with building completion until all bracing is securely and properly in place

Never stack materials on unbraced or inadequately braced trusses

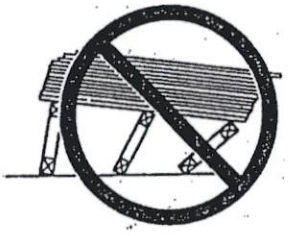

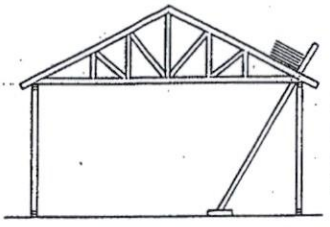

Proper distribution of construction materials is a must during construction.

Never stack materials near a peak

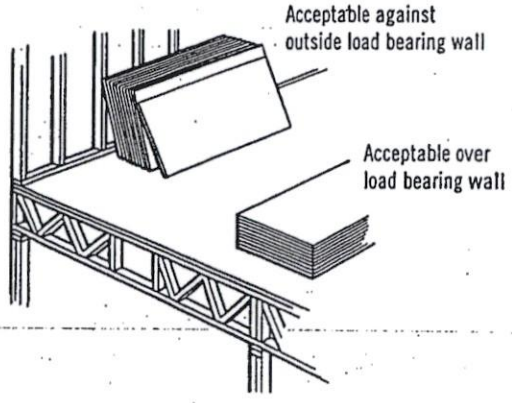

Never stack materials on the cantilever of a truss

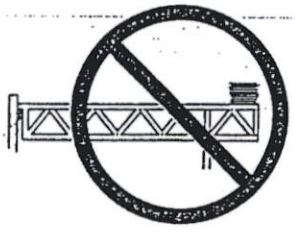

Always stack materials over two or more trusses.

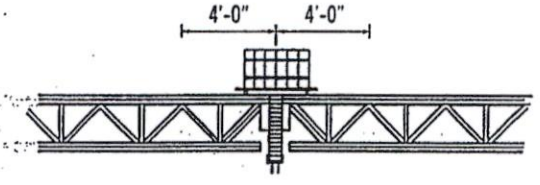

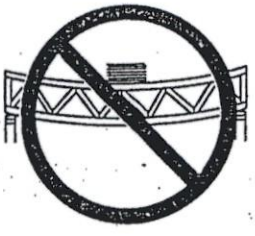

Never overload small groups or single trusses. Position load over as many trusses as possible.

Roofing and mechanical contractors are cautioned to stack materials only along outside supporting members or directly over inside supporting members. Trusses are not designed for dynamic loads (i.e., moving vehicles). Extreme care should be taken when loading and stacking construction materials (rolled roofing, mechanical equipment, etc.) on the roof or floor system.

Never cut any structural member of a truss.

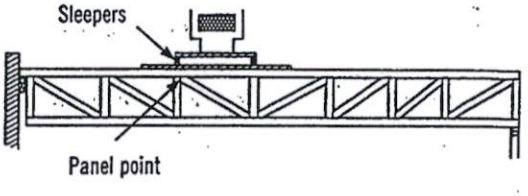

Sleepers for mechanical equipment should be located at panel points (joints) or over main supporting members, and only on trusses that have been designed for such loads.

Caution Notes

Errors in building lines and/or dimensions, or errors by others shall be corrected by the contractor or responsible construction trade subcontractor or supplier **before** erection of trusses begins.

Cutting of nonstructural overhangs is considered a part of normal erection and shall be done by the builder or erection contractor.

Any field modification that involves the cutting, drilling, or relocation of any structural truss member or connector plate shall not be done without the approval of the truss manufacturer or a licensed design professional.

The methods and procedures outlined are intended to ensure that the overall construction techniques employed will put floor and roof trusses **safely** in place in a completed structure. These recommendations for bracing wood trusses originate from the collective experience of leading technical personnel in the wood truss industry, but must, due to the nature of responsibilities involved, be presented only as a **guide** for use by a qualified building designer, builder, or erection contractor. Thus, the Wood Truss Council of America expressly disclaims any responsibility for damages arising from the use, application, or reliance on the recommendations and information contained herein.

[Selected text and figures referenced or reproduced from HIB and DSB by permission of the Truss Plate Institute, Madison, WI.]

THE CANADIAN WOOD TRUSS ASSOCIATION

L'ASSOCIATION CANADIENNE DES FABRICANTS DE FERMES DE BOIS

1400 Blair Place, Suite 210, Ottawa, ON K1J 9B8
Tel.: 613-747-5544 Fax: 613-747-6264

Wood Truss Council of America

One WTCA Center
6300 Enterprise Lane, Madison, WI 53719-1140
Tel.: 608-274-4849 Fax: 608-274-3329
wtca@woodtruss.com www.woodtruss.com