ALL CONV. FRAMING TO CONFORM WITH PART 9 OF O.B.C. (Latest Edition) ROOF RAFTERS THAT CROSS MEET OVER TRUSSES TO BE 2X4 SPF #2 24"O.C. WITH A VERT.POST TO THE TRUSS UNDERNEATH AT EACH CROSS PT. VERT. POST LONGER THAN 6' TO HAVE LATERAL BRACING SO THAT THE DIST. BETWEEN END PT. & BETWEEN ROWS OF BRACING DOES NOT EXCEED 6'

ALPA-BARRIE

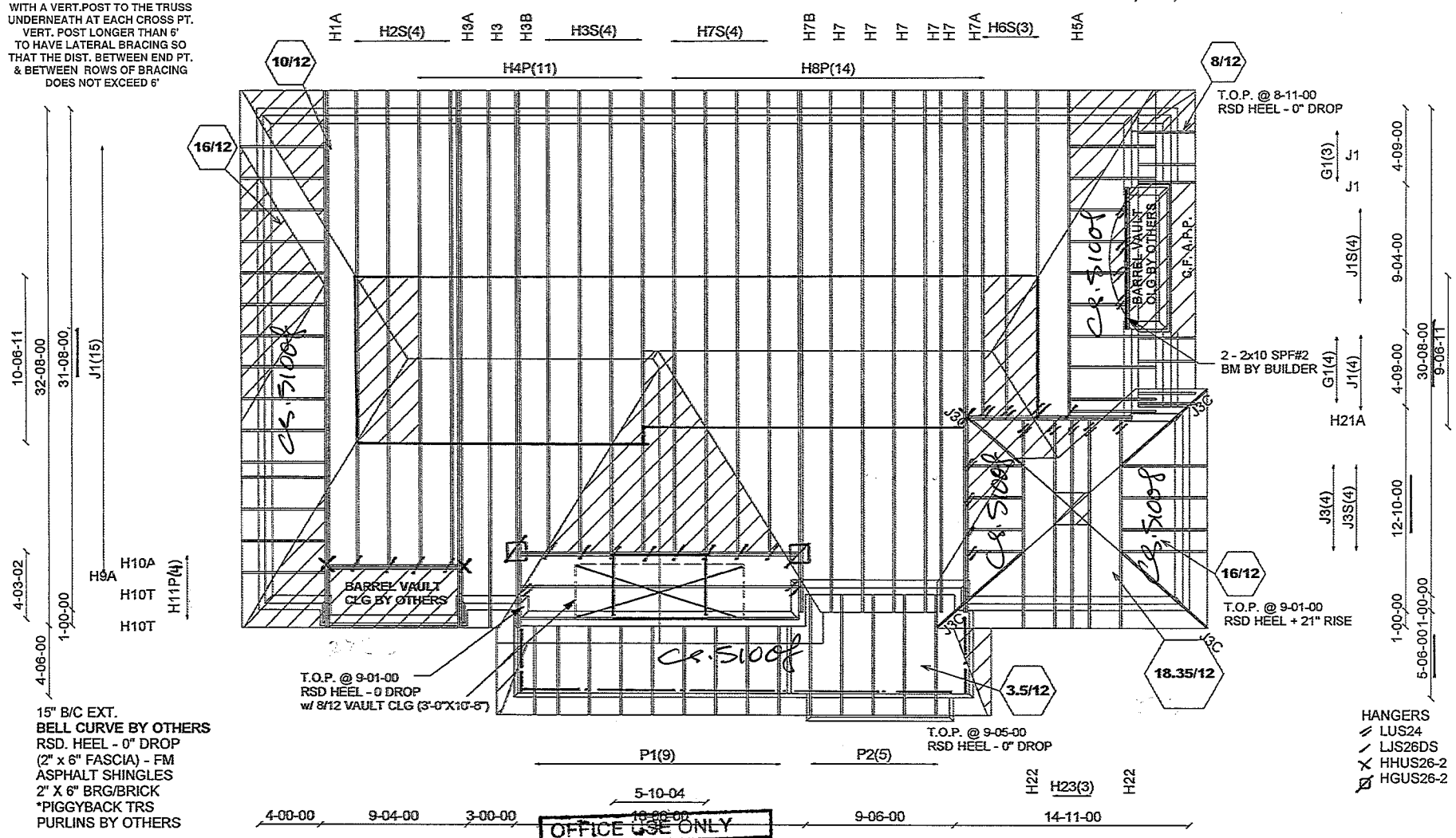

15" B/C EXT.
BELL CURVE BY OTHERS
RSD. HEEL - 0" DROP
(2" x 6" FASCIA) - FM
ASPHALT SHINGLES
2" X 6" BRG/BRICK
*PIGGYBACK TRS
PURLINS BY OTHERS

~~CONFIRM TRUSS LAYOUT/DIRECTION~~
JAN/16/18

HANGERS
LUS24
LJS26DS
HHUS26-2
HGUS26-2

CONVENTIONAL FRAMING BY OTHERS

OFFICE USE ONLY
ENGINEERED FROM
A- 18023269 TO
A- 18023289

LILAC

Job Track: 45147	Builder / Location: GOLD PARK HOMES / VAUGHAN		Model / Elevation: 4006 / B
Layout ID: 291811	Project: PINE VALLEY		
Plan Log: 95233	Date: 1/17/2018	Designer: AMANDA	

THESE DRAWINGS CONSTITUTE THE PROPERTY OF ALPA ROOF TRUSSES INC., SHALL NOT BE REPRODUCED, PUBLISHED, OR REDISTRIBUTED IN ANY MANNER OR UTILIZED FOR ANY PURPOSE OTHER THAN THE MANUFACTURE OF TRUSSES BY ALPA ROOF TRUSSES INC AND WILL BE RETRACTED BY ALPA ROOF TRUSSES INC IF UTLILZED FOR ANY OTHER PURPOSE.

ALL CONV. FRAMING TO CONFORM WITH PART 9 OF O.B.C. (Latest Edition) ROOF RAFTERS THAT CROSS MEET OVER TRUSSES TO BE 2X4 SPF #2 24"O.C. WITH A VERT.POST TO THE TRUSS UNDERNEATH AT EACH CROSS PT. VERT. POST LONGER THAN 6' TO HAVE LATERAL BRACING SO THAT THE DIST. BETWEEN END PT. & BETWEEN ROWS OF BRACING DOES NOT EXCEED 6'

ALPA-BARRIE

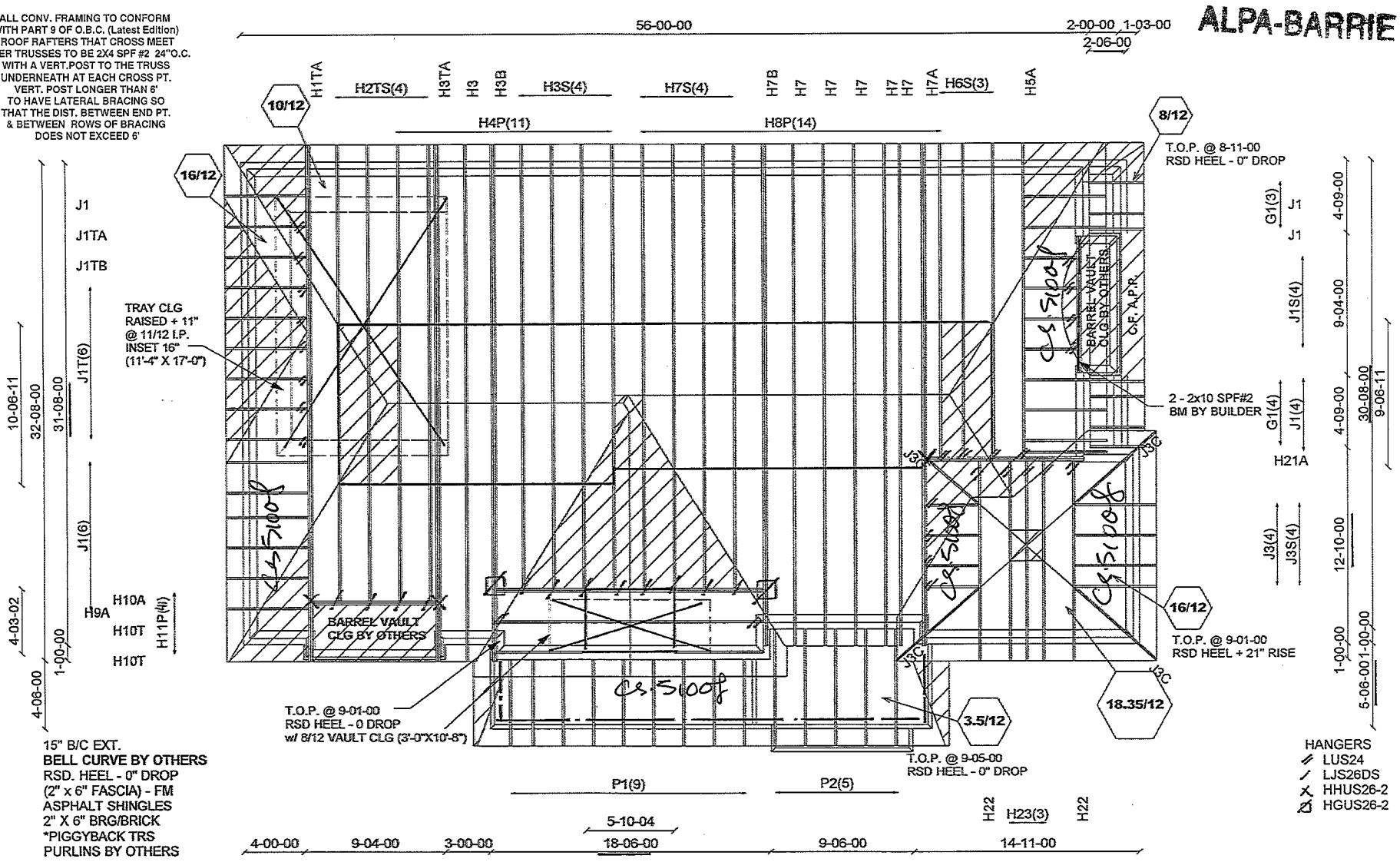

15" B/C EXT.
BELL CURVE BY OTHERS
RSD. HEEL - 0" DROP
(2" x 6" FASCIA) - FM
ASPHALT SHINGLES
2" X 6" BRG/BRICK
*PIGGYBACK TRS
PURLINS BY OTHERS

HANGERS
LUS24
LJS26DS
HHUS26-2
HGUS26-2

~~CONFIRM TRUSS LAYOUT/DIRECTION~~
JAN/16/18

OFFICE USE ONLY
ENGINEERED FROM
A- 18023271 TO
A- 18023295

LILAC

CONVENTIONAL FRAMING BY OTHERS

Job Track: 45147	Builder / Location: GOLD PARK HOMES / VAUGHAN	Model / Elevation: 4006 REV1	/ B OPT TRAY
Layout ID: 292588	Project: PINE VALLEY	THESE DRAWINGS CONSTITUTE THE PROPERTY OF ALPA ROOF TRUSSES INC., SHALL NOT BE REPRODUCED, PUBLISHED, OR REDISTRIBUTED IN ANY MANNER OR UTILIZED FOR ANY PURPOSE OTHER THAN THE MANUFACTURE OF TRUSSES BY ALPA ROOF TRUSSES INC AND WILL BE RETRACTED BY ALPA ROOF TRUSSES INC IF UTLILZED FOR ANY OTHER PURPOSE.	
Plan Log: 95914	Date: 1/17/2018 Designer: AMANDA		

Stracon Engineering Inc.

69 Graydon Crescent
Richmond Hill, Ontario
L4B 3W7
(905) 832-2250 Fax (905) 832-0286

REGISTERED PROFESSIONAL ENGINEER
JAN 15 2014
F. FOK
PROVINCE OF ONTARIO

RESPONSIBILITIES

1. Stracon Engineering Inc. is responsible for the design of trusses as individual components.
2. It is the responsibility of others to ascertain that the design loads utilized on this drawing meet or exceed the actual dead load imposed by the structure and the live load imposed by the local building code or the authorities with jurisdictions.
3. All dimensions are to be verified by owner contractor, architect or other authority before manufacture.
4. Stracon Engineering Inc. bears no responsibility for the erection of the trusses. Persons erecting trusses are cautioned to seek professional advice regarding temporary and permanent bracing system. Bracing shown on Stracon Engineering Inc. drawings is specified for the truss as a component only and forms an integral part of the truss design.
5. It is the truss manufacture's responsibility to ensure that trusses are manufactured in conformance with Stracon Engineering Inc. specifications outlined below.

SPECIFICATIONS

1. Trusses designed by Stracon Engineering Inc. conforms to the relevant section of the Ontario Building Code of Canada (Part 9 or Part 4) or to the Canadian code for farm buildings, whichever applies to the building type indicated on the drawings as well as to the procedures established by the truss plate institute of Canada. Unit stresses used are as per CSA-086-09.
2. Lumber is to be the sizes and grade specified.
3. Moisture content of lumber is not to exceed 19% in service unless otherwise specified.
4. Lumber not to be treated with chemicals unless otherwise specified.
5. Plates shall be applied to both faces of the truss at each joint and shall be positioned as specified.
6. The top chord is assumed to be continuously laterally braced by the roof sheathing or purlins at intervals not exceeding 12.5 times in thickness.
7. Where not rigid ceiling is attached directly to the bottom chord, laterally brace the chords at intervals not exceeding 3M (10') o.c.

January 15, 2014

JOB NAME	TRUSS NAME	QUANTITY	PLY	JOB DESC.	DRWG NO.
291811	H1A	1	2	TRUSS DESC.	

Alpa Roof Truss, Maple

Version 8.200 S Jan 6 2018 MiTek Industries, Inc. Fri Feb 16 12:48:40 2018 Page 1

ID:84gOFYESM8s1JmDO6_uSGRyQWjP-W3FGY870S7eY0c?IR4phwKaQSelbv4OQyGAueizka05

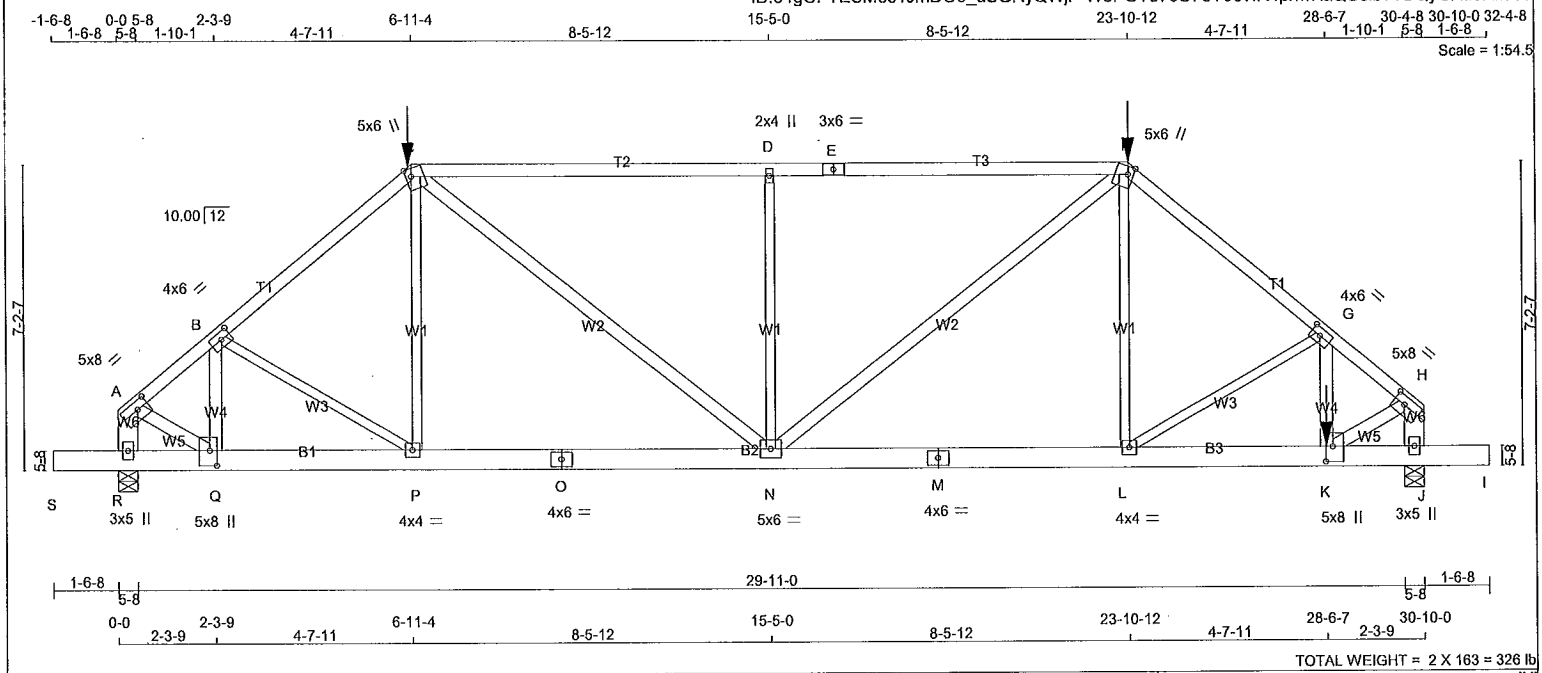

TOTAL WEIGHT = 2 X 163 = 326 lb

[M]

LUMBER

N. L. G. A. RULES

CHORDS	SIZE		LUMBER	DESCR.
A - C	2x4	DRY	No.2	SPF
C - E	2x4	DRY	1650F 1.5E	SPF
E - F	2x4	DRY	1650F 1.5E	SPF
F - H	2x4	DRY	No.2	SPF
R - A	2x6	DRY	No.2	SPF
J - H	2x6	DRY	No.2	SPF
S - O	2x6	DRY	No.2	SPF
O - M	2x6	DRY	No.2	SPF
M - I	2x6	DRY	No.2	SPF
ALL WEBS EXCEPT	2x4	DRY	No.2	SPF
B - P	2x3	DRY	No.2	SPF
P - C	2x3	DRY	No.2	SPF
L - F	2x3	DRY	No.2	SPF
L - G	2x3	DRY	No.2	SPF
N - D	2x3	DRY	No.2	SPF

DRY: SEASONED LUMBER.

DESIGN CONSISTS OF 2 TRUSSES BUILT SEPARATELY THEN FASTENED TOGETHER AS FOLLOWS:

CHORDS	#ROWS	SURFACE SPACING (IN)	LOAD(PLF)
TOP CHORDS : (0.122"X3") SPIRAL NAILS			
A- C	1	12	SIDE(61.0)
C- E	1	12	SIDE(47.5)
E- F	1	12	SIDE(47.5)
F- H	1	12	SIDE(61.0)
R- A	2	12	TOP
J- H	2	12	TOP
BOTTOM CHORDS : (0.122"X3") SPIRAL NAILS			
S- O	2	12	SIDE(4.9)
O- M	2	12	SIDE(4.9)
M- I	2	12	SIDE(160.1)
WEBS : (0.122"X3") SPIRAL NAILS			
P- C	1	6	SIDE(38.1)
L- F	1	6	SIDE(38.1)
2x3	1	6	
G- K	2	3	SIDE(686.0)
2x4	1	6	

NOTE: Lateral brace(s) shown shall be 1x4 for Part 9 design as per OBC 9.23.13.11, and no less than 2x4 for Part 4 design

REGISTERED PROFESSIONAL ENGINEER
02/16/2018
EDWIN C. FOK
PROVINCE OF ONTARIO

DIMENSIONS, SUPPORTS AND LOADINGS SPECIFIED BY FABRICATOR TO BE VERIFIED BY BUILDING DESIGNER

BEARINGS

JT	FACTORED GROSS REACTION VERT	HORZ	MAXIMUM FACTORED GROSS REACTION DOWN	HORZ	UPLIFT	INPUT BRG IN-SX	REQRD BRG IN-SX
R	2558	0	2558	0	0	5-8	1-8
J	5634	0	5634	0	0	5-8	3-7

UNFACTORED REACTIONS

JT	1ST LCASE COMBINED	SNOW	MAX./MIN. COMPONENT REACTIONS LIVE	PERM.LIVE	WIND	DEAD	SOIL
R	1820	1131 / 0	0 / 0	0 / 0	0 / 0	689 / 0	0 / 0
J	3963	2722 / 0	0 / 0	0 / 0	0 / 0	1241 / 0	0 / 0

BEARING MATERIAL TO BE SPF NO.2 OR BETTER AT JOINT(S) R, J

BRACING

TOP CHORD TO BE SHEATHED OR MAX. PURLIN SPACING = 4.08 FT.
MAX. UNBRACED BOTTOM CHORD LENGTH = 10.00 FT OR RIGID CEILING DIRECTLY APPLIED.

ALL PITCH BREAKS AND PERIMETER CORNER JOINTS MUST BE LATERALLY RESTRAINED.

LOADING

TOTAL LOAD CASES: (4)

CHORDS

MEMB. FR-TO	MAX. FACTORED FORCE (LBS)	FACTORED VERT. LOAD LC1 (PLF) FROM	TO	MAX CSI (LC)	MAX. UNBRAC LENGTH
A- B	-2346 / 0	-78.0	-78.0	0.13 (1)	5.73
B- C	-2766 / 0	-78.0	-78.0	0.16 (1)	5.36
C- D	-3306 / 0	-115.1	-115.1	0.82 (1)	4.58
D- E	-3307 / 0	-115.1	-115.1	0.82 (1)	4.58
E- F	-3307 / 0	-115.1	-115.1	0.82 (1)	4.58
F- G	-3577 / 0	-78.0	-78.0	0.19 (1)	4.82
G- H	-5226 / 0	-198.2	-198.2	0.19 (1)	4.08
R- A	-2355 / 0	0.0	0.0	0.08 (1)	7.81
J- H	-5304 / 0	0.0	0.0	0.19 (1)	6.35
S- R	0 / 0	-96.5	-96.5	0.04 (1)	10.00
R- Q	0 / 0	-27.3	-27.3	0.02 (1)	10.00
Q- P	0 / 1833	-27.3	-27.3	0.17 (1)	10.00
P- O	0 / 2106	-27.3	-27.3	0.19 (1)	10.00
O- N	0 / 2106	-27.3	-27.3	0.19 (1)	10.00
N- M	0 / 2744	-27.3	-27.3	0.24 (1)	10.00
M- L	0 / 2744	-27.3	-27.3	0.24 (1)	10.00
L- K	0 / 4044	-27.3	-27.3	0.36 (1)	10.00
K- J	0 / 0	-55.8	-55.8	0.10 (1)	10.00
J- I	0 / 0	-96.5	-96.5	0.04 (1)	10.00

WEBS

MEMB. FR-TO	MAX. FACTORED FORCE (LBS)	MAX CSI (LC)
Q- B	-767 / 0	0.06 (1)
B- P	0 / 320	0.04 (1)
P- C	0 / 166	0.03 (4)
L- F	0 / 1088	0.13 (1)
L- G	-1546 / 0	0.41 (1)
K- G	0 / 1397	0.12 (1)
A- Q	0 / 2000	0.18 (1)
K- H	0 / 4413	0.39 (1)
N- F	0 / 722	0.06 (1)
C- N	0 / 1540	0.14 (1)
N- D	-1197 / 0	0.52 (1)

FACTORED CONCENTRATED LOADS (LBS)

JT	LOC.	LC1	MAX-	MAX+	FACE	DIR.	TYPE
C	6-11-4	-217	-217	---	FRONT	VERT	TOTAL
F	23-10-12	-217	-217	---	FRONT	VERT	TOTAL
K	28-6-6	-3243	-3243	---	FRONT	VERT	TOTAL

DESIGN CRITERIA

*** SPECIAL LOADS ANALYSIS ***
GEOMETRY AND/OR BASIC LOADS CHANGED BY USER.
LOADS WERE DERIVED FROM USER INPUT
NO FURTHER MODIFICATIONS WERE MADE

SPECIFIED LOADS:

TOP CH.	LL	=	21.0	PSF
	DL	=	6.0	PSF
BOT CH.	LL	=	0.0	PSF
	DL	=	7.4	PSF
TOTAL LOAD		=	34.4	PSF

SPACING = 24.0 IN. C/C

LOADING IN FLAT SECTION BASED ON A SLOPE OF 2.00/12 MINIMUM

GIRDER TYPE: CPrimeHip
SIDE SETBACK = 0-0
END SETBACK = 8-2-0
END WALL WIDTH = 0-0
CORNER FRAMING TYPE: CONVENTIONAL
END JACK TYPE: CONVENTIONAL
APPLIED TO FRONT SIDE
- ADDT'L LOADS BASED ON 55 % OF GSL.
LOADS APPLIED TO FIRST 2-4-0 OF SPAN MEASURED FROM THE RIGHT.

GIRDER TYPE: CPrimeHip
SIDE SETBACK = 6-11-4
END SETBACK = 3-10-14
END WALL WIDTH = 0-0
CORNER FRAMING TYPE: CONVENTIONAL
END JACK TYPE: CONVENTIONAL
APPLIED TO FRONT SIDE
- ADDT'L LOADS BASED ON 55 % OF GSL.

*** NON STANDARD GIRDER ***
ADDT'L USER-DEFINED LOADS APPLIED TO ALL LOAD CASES.

THIS TRUSS IS DESIGNED FOR RESIDENTIAL OR SMALL BUILDING REQUIREMENTS OF PART 9, NBCC 2010, NBCC 2015

THIS DESIGN COMPLIES WITH:
- PART 9 OF OBC 2012, OBC 2018
- CSA 086-09, CSA 086-14
- TPIC 2011, TPIC 2014

(55 % OF 23.0 P.S.F. G.S.L. PLUS 8.4 P.S.F. RAIN LOAD) EQUALS 21.0 P.S.F. SPECIFIED ROOF LIVE LOAD

ALLOWABLE DEFL.(LL)= L/360 (1.03")
CALCULATED VERT. DEFL.(LL) = L/ 999 (0.05")
ALLOWABLE DEFL.(TL)= L/360 (1.03")
CALCULATED VERT. DEFL.(TL) = L/ 999 (0.11")

CANTILEVER DEFLECTION:
ALLOWABLE DEFL.(LL)= L/120 (0.19")
CALCULATED VERT. DEFL.(LL) = L/ 999 (0.00")
ALLOWABLE DEFL.(TL)= L/120 (0.19")
CALCULATED VERT. DEFL.(TL) = L/ 999 (0.00")

A-18023269

CONTINUED ON PAGE 2

NAILS TO BE DRIVEN FROM ONE SIDE ONLY.

GIRDER NAILING ASSUMES NAILED HANGERS ARE FASTENED WITH MIN. 3-0 INCH NAILS.

PLATES (table is in inches)

JT	TYPE	PLATES	W	LEN	Y	X
A	TMVW-t	MT20	5.0	8.0	2.25	3.25
B	TMWW-t	MT20	4.0	6.0	2.00	2.75
C	TTWW+m	MT20	5.0	6.0	2.25	1.50
D	TMW+w	MT20	2.0	4.0		
E	TS-t	MT20	3.0	6.0		
F	TTWW+m	MT20	5.0	6.0	2.25	1.50
G	TMWW-t	MT20	4.0	6.0	2.00	2.75
H	TMVW-t	MT20	5.0	8.0	2.25	3.25
J	BMV1+p	MT20	3.0	5.0		
K	BMWW+t	MT20	5.0	8.0	4.25	2.00
L	BMWW-t	MT20	4.0	4.0		
M	BS-t	MT20	4.0	6.0		
N	BMWWW-t	MT20	5.0	6.0		
O	BS-t	MT20	4.0	6.0		
P	BMWW-t	MT20	4.0	4.0		
Q	BMWW+t	MT20	5.0	8.0	4.25	2.00
R	BMV1+p	MT20	3.0	5.0		

HANGERS NOTES

1) SPECIAL HANGER(S) OR CONNECTION(S) REQUIRED TO SUPPORT CONCENTRATED LOAD(S) 216.9 lbs FACTORED DOWN AT 23-10-12, AND 216.9 lbs FACTORED DOWN AT 6-11-4 ON TOP CHORD, AND 3243.2 lbs FACTORED DOWN AT 28-6-6 ON BOTTOM CHORD. DESIGN FOR UNSPECIFIED CONNECTION(S) IS DELEGATED TO THE BUILDING DESIGNER.

NOTE: Lateral brace(s) shown shall be 1x4 for Part 9 design as per OBC 9.23.13.11, and no less than 2x4 for Part 4 design

REGISTERED PROFESSIONAL ENGINEER
02/16/2018
EDWIN C. FOK
PROVINCE OF ONTARIO

CSI: TC=0.82/1.00 (D-F:1) , BC=0.36/1.00 (K-L:1) , WB=0.52/1.00 (D-N:1) , SSI=0.26/1.00 (C-D:1)

DOL LUMBER=1.00 NAIL=1.00 LS BEND=1.00 COMP=1.00 SHEAR=1.00 TENS= 1.00

COMPANION LIVE LOAD FACTOR = 1.00

AUTOSOLVE HEELS OFF

TRUSS PLATE MANUFACTURER IS NOT RESPONSIBLE FOR QUALITY CONTROL IN THE TRUSS MANUFACTURING PLANT .

NAIL VALUES

PLATE	GRIP(DRY) (PSI)		SHEAR (PLI)		SECTION (PLI)	
	MAX	MIN	MAX	MIN	MAX	MIN
MT20	618	354	1667	788	1987	1656

PLATE PLACEMENT TOL. = 0.250 inches

PLATE ROTATION TOL. = 5.0 Deg.

JSI GRIP= 0.86 (H) (INPUT = 0.90)
JSI METAL= 0.73 (K) (INPUT = 1.00)

A-18023269(2)

JOB NAME	TRUSS NAME	QUANTITY	PLY	JOB DESC.	DRWG NO.
291811	H2S	4	1	TRUSS DESC.	

Alpa Roof Truss, Maple

Version 8.200 S Jan 6 2018 MiTek Industries, Inc. Fri Feb 16 12:42:54 2018 Page 1

ID:84gOFYESM8s1JmDO6_uSGRyQWjP-fVLSxrx_xp2eWRZoAPcYuMFQaAf7qbeUORMbUlzka5V

Scale = 1:60.9

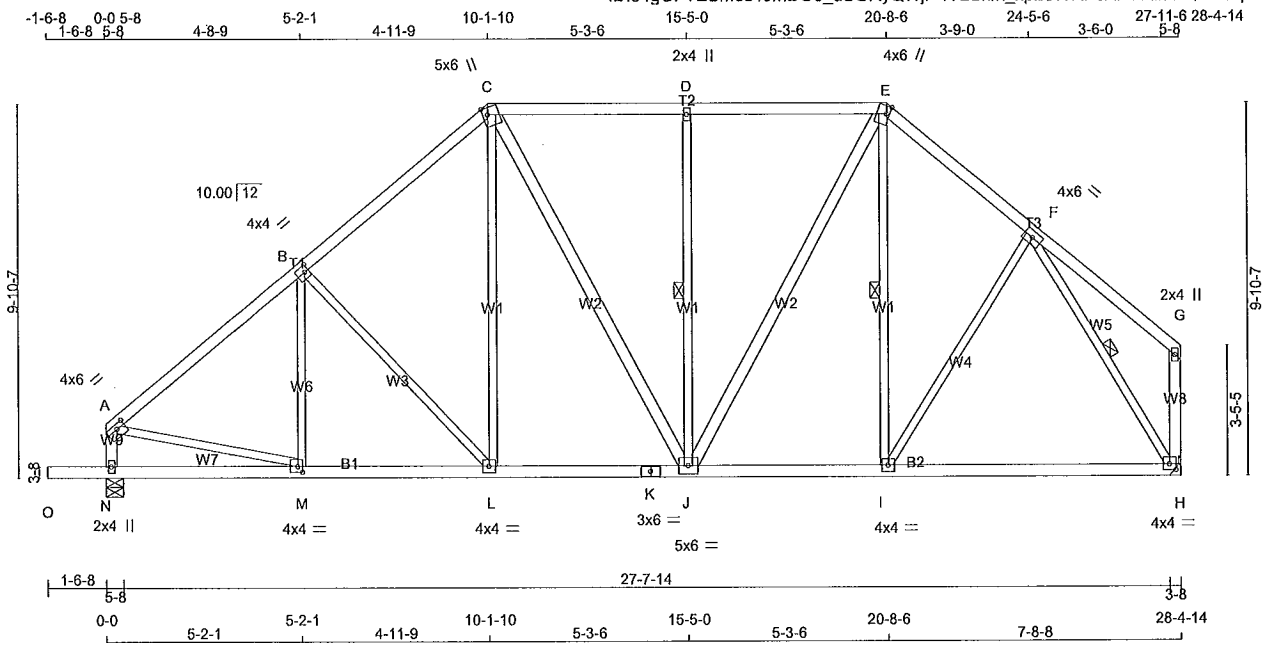

TOTAL WEIGHT = 4 X 150 = 600 lb

[M][F]

LUMBER

N. L. G. A. RULES

CHORDS	SIZE		LUMBER	DESCR.
A - C	2x4	DRY	No.2	SPF
C - E	2x4	DRY	No.2	SPF
E - G	2x4	DRY	No.2	SPF
N - A	2x4	DRY	No.2	SPF
H - G	2x4	DRY	No.2	SPF
O - K	2x4	DRY	No.2	SPF
K - H	2x4	DRY	No.2	SPF
ALL WEBS	2x3	DRY	No.2	SPF
EXCEPT				
C - J	2x4	DRY	No.2	SPF
J - E	2x4	DRY	No.2	SPF

DRY: SEASONED LUMBER.

PLATES (table is in inches)

JT	TYPE	PLATES	W	LEN	Y	X
A	TMVW-t	MT20	4.0	6.0	1.50	2.75
B	TMWW-t	MT20	4.0	4.0	2.00	1.25
C	TTWW+m	MT20	5.0	6.0	2.25	1.50
D	TMW+w	MT20	2.0	4.0		
E	TTWW+m	MT20	4.0	6.0	Edge	1.00
F	TMWW-t	MT20	4.0	6.0		
G	TMV+p	MT20	2.0	4.0		
H	BMVW1-t	MT20	4.0	4.0	1.75	2.00
I	BMWW-t	MT20	4.0	4.0		
J	BMWWW-t	MT20	5.0	6.0		
K	BS-t	MT20	3.0	6.0		
L	BMWW-t	MT20	4.0	4.0		
M	BMWW-t	MT20	4.0	4.0	1.75	1.50
N	BMV1+p	MT20	2.0	4.0		

Edge - INDICATES REFERENCE CORNER OF PLATE TOUCHES EDGE OF CHORD.

NOTE: Lateral brace(s) shown shall be 1x4 for Part 9 design as per OBC 9.23.13.11, and no less than 2x4 for Part 4 design

REGISTERED PROFESSIONAL ENGINEER
02/16/2018
EDWIN C. FOK
PROVINCE OF ONTARIO

DIMENSIONS, SUPPORTS AND LOADINGS SPECIFIED BY FABRICATOR TO BE VERIFIED BY BUILDING DESIGNER

BEARINGS

JT	FACTORED GROSS REACTION VERT	HORZ	MAXIMUM FACTORED GROSS REACTION DOWN	HORZ	UPLIFT	INPUT BRG IN-SX	REQRD BRG IN-SX
N	1555	0	1555	0	0	5-8	2-5
H	1413	0	1413	0	0	HANGER BY OTHERS	
						MIN. SEAT SIZE: 1-9	

UNFACTORED REACTIONS

1ST LCASE MAX./MIN. COMPONENT REACTIONS

JT	COMBINED	SNOW	LIVE	PERM.LIVE	WIND	DEAD	SOIL
N	1112	661 / 0	0 / 0	0 / 0	0 / 0	451 / 0	0 / 0
H	1011	596 / 0	0 / 0	0 / 0	0 / 0	415 / 0	0 / 0

BEARING MATERIAL TO BE SPF NO.2 OR BETTER AT JOINT(S) N

BRACING

FOR SECTION C-E, MAX. PURLIN SPACING = 2.00 FT.
FOR OTHER SECTIONS, TOP CHORD TO BE SHEATHED OR MAX. PURLIN SPACING = 5.08 FT.
MAX. UNBRACED BOTTOM CHORD LENGTH = 10.00 FT OR RIGID CEILING DIRECTLY APPLIED.

ALL PITCH BREAKS AND PERIMETER CORNER JOINTS MUST BE LATERALLY RESTRAINED.

1 LATERAL BRACE(S) AT 1/ 2 LENGTH OF D-J, E-I, F-H.

END VERTICAL(S) MUST BE SHEATHED OR HAVE BRACES AS INDICATED IN THE MAX. UNBRACED LENGTH COLUMN OF THE TABLE BELOW

LOADING

TOTAL LOAD CASES: (4)

CHORDS

MEMB. FR-TO	MAX. FACTORED FORCE (LBS)	FACTORED VERT. LOAD LC1 (PLF) FROM	TO	MAX CSI (LC)	MAX. UNBRAC LENGTH
A- B	-1481 / 0	-78.0	-78.0	0.30 (1)	5.08
B- C	-1303 / 0	-78.0	-78.0	0.28 (1)	5.35
C- D	-1088 / 0	-85.5	-85.5	0.32 (1)	2.00
D- E	-1088 / 0	-85.5	-85.5	0.32 (1)	2.00
E- F	-1134 / 0	-78.0	-78.0	0.16 (1)	5.80
F- G	0 / 22	-78.0	-78.0	0.18 (1)	10.00
N- A	-1366 / 0	0.0	0.0	0.14 (1)	6.94
H- G	-117 / 0	0.0	0.0	0.02 (1)	7.81
O- N	0 / 0	-96.5	-96.5	0.16 (1)	10.00
N- M	0 / 0	-18.5	-18.5	0.11 (4)	10.00
M- L	0 / 1160	-18.5	-18.5	0.24 (1)	10.00
L- K	0 / 978	-18.5	-18.5	0.21 (1)	10.00
K- J	0 / 978	-18.5	-18.5	0.21 (1)	10.00
J- I	0 / 851	-18.5	-18.5	0.33 (4)	10.00
I- H	0 / 757	-18.5	-18.5	0.31 (4)	10.00

WEBS

MEMB. FR-TO	MAX. FACTORED FORCE (LBS)	MAX CSI (LC)
M- B	-142 / 17	0.07 (1)
B- L	-271 / 0	0.29 (1)
L- C	0 / 297	0.07 (1)
C- J	0 / 227	0.04 (1)
J- D	-551 / 0	0.36 (1)
J- E	0 / 489	0.08 (1)
I- E	-5 / 61	0.02 (4)
I- F	0 / 180	0.04 (4)
A- M	0 / 1186	0.27 (1)
F- H	-1450 / 0	0.52 (1)

DESIGN CRITERIA

SPECIFIED LOADS:

TOP CH.	LL	=	21.0	PSF
	DL	=	6.0	PSF
BOT CH.	LL	=	0.0	PSF
	DL	=	7.4	PSF
TOTAL LOAD		=	34.4	PSF

SPACING = 24.0 IN. C/C

LOADING IN FLAT SECTION BASED ON PIGGYBACK TRUSS WITH SLOPES OF 6.00/12 AND -6.00/12 AND RESPECTIVE WALL HEIGHTS OF 0-0 AND 0-0 AND AN ADDITIONAL DEAD LOAD OF 3.0 P.S.F.

THIS TRUSS IS DESIGNED FOR RESIDENTIAL OR SMALL BUILDING REQUIREMENTS OF PART 9, NBCC 2010, NBCC 2015

THIS DESIGN COMPLIES WITH:
- PART 9 OF OBC 2012, OBC 2018
- CSA 086-09, CSA 086-14
- TPIC 2011, TPIC 2014

(55 % OF 23.0 P.S.F. G.S.L. PLUS 8.4 P.S.F. RAIN LOAD) EQUALS 21.0 P.S.F. SPECIFIED ROOF LIVE LOAD

ALLOWABLE DEFL.(LL)= L/360 (0.95")
CALCULATED VERT. DEFL.(LL) = L/ 999 (0.04")
ALLOWABLE DEFL.(TL)= L/360 (0.95")
CALCULATED VERT. DEFL.(TL) = L/ 999 (0.12")

CANTILEVER DEFLECTION:
ALLOWABLE DEFL.(LL)= L/120 (0.19")
CALCULATED VERT. DEFL.(LL) = L/ 999 (0.01")
ALLOWABLE DEFL.(TL)= L/120 (0.19")
CALCULATED VERT. DEFL.(TL) = L/ 999 (0.01")

CSI: TC=0.32/1.00 (C-D:1) , BC=0.33/1.00 (I-J:4) , WB=0.52/1.00 (F-H:1) , SSI=0.22/1.00 (C-D:1)

DOL LUMBER=1.00 NAIL=1.00 LS BEND=1.10 COMP=1.10 SHEAR=1.10 TENS= 1.10

COMPANION LIVE LOAD FACTOR = 1.00

TRUSS PLATE MANUFACTURER IS NOT RESPONSIBLE FOR QUALITY CONTROL IN THE TRUSS MANUFACTURING PLANT .

NAIL VALUES

PLATE	GRIP(DRY) (PSI) MAX	MIN	SHEAR (PLI) MAX	MIN	SECTION (PLI) MAX	MIN
MT20	618	354	1667	788	1987	1656

PLATE PLACEMENT TOL. = 0.250 inches

PLATE ROTATION TOL. = 5.0 Deg.

JSI GRIP= 0.90 (H) (INPUT = 0.90)
JSI METAL= 0.43 (M) (INPUT = 1.00)

A-18023270

JOB NAME	TRUSS NAME	QUANTITY	PLY	JOB DESC.	DRWG NO.
291811	H3	1	1	TRUSS DESC.	

Alpa Roof Truss, Maple

Version 8.200 S Jan 6 2018 MiTek Industries, Inc. Fri Feb 16 12:43:09 2018 Page 1

ID:84gOFYESM8s1JmDO6_uSGRyQWjP-iOl74z6OPQxWpkChY3N4?XNziDonrQviqHVtWNzka5G

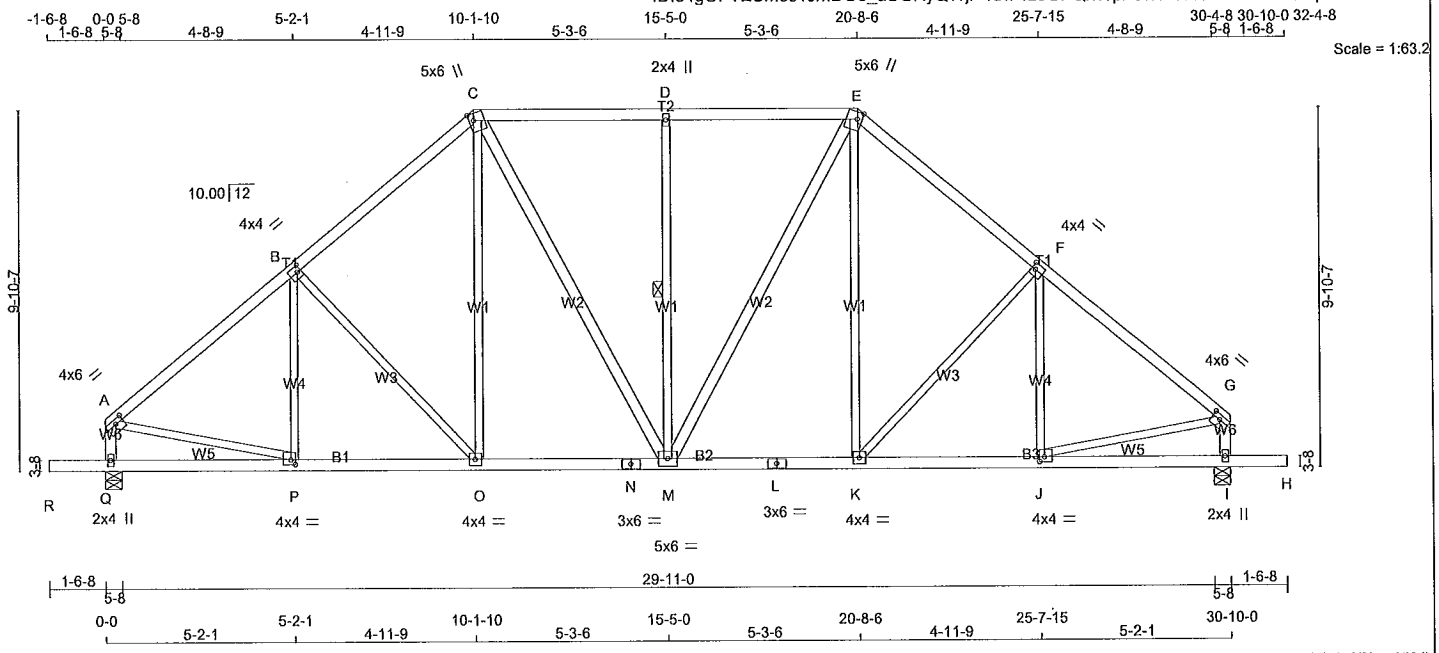

TOTAL WEIGHT = 158 lb

[M][F]

LUMBER

N. L. G. A. RULES

CHORDS	SIZE		LUMBER	DESCR.
A - C	2x4	DRY	No.2	SPF
C - E	2x4	DRY	No.2	SPF
E - G	2x4	DRY	No.2	SPF
Q - A	2x4	DRY	No.2	SPF
I - G	2x4	DRY	No.2	SPF
R - N	2x4	DRY	No.2	SPF
N - L	2x4	DRY	No.2	SPF
L - H	2x4	DRY	No.2	SPF
ALL WEBS EXCEPT	2x3	DRY	No.2	SPF
C - M	2x4	DRY	No.2	SPF
M - E	2x4	DRY	No.2	SPF

DRY: SEASONED LUMBER.

PLATES (table is in inches)

JT	TYPE	PLATES	W	LEN	Y	X
A	TMVW-t	MT20	4.0	6.0	1.50	2.75
B	TMWW-t	MT20	4.0	4.0	2.00	1.25
C	TTWW+m	MT20	5.0	6.0	2.25	1.50
D	TMW+w	MT20	2.0	4.0		
E	TTWW+m	MT20	5.0	6.0	2.25	1.50
F	TMWW-t	MT20	4.0	4.0	2.00	1.25
G	TMVW-t	MT20	4.0	6.0	1.50	2.75
I	BMV1+p	MT20	2.0	4.0		
J	BMWW-t	MT20	4.0	4.0	1.50	1.50
K	BMWW-t	MT20	4.0	4.0		
L	BS-t	MT20	3.0	6.0		
M	BMWWW-t	MT20	5.0	6.0		
N	BS-t	MT20	3.0	6.0		
O	BMWW-t	MT20	4.0	4.0		
P	BMWW-t	MT20	4.0	4.0	1.50	1.50
Q	BMV1+p	MT20	2.0	4.0		

NOTE: Lateral brace(s) shown shall be 1x4 for Part 9 design as per OBC 9.23.13.11, and no less than 2x4 for Part 4 design

REGISTERED PROFESSIONAL ENGINEER
02/16/2018
EDWIN C. FOK
PROVINCE OF ONTARIO

DIMENSIONS, SUPPORTS AND LOADINGS SPECIFIED BY FABRICATOR TO BE VERIFIED BY BUILDING DESIGNER

BEARINGS

JT	FACTORED GROSS REACTION VERT	HORZ	MAXIMUM FACTORED GROSS REACTION DOWN	HORZ	UPLIFT	INPUT BRG IN-SX	REQRD BRG IN-SX
Q	1676	0	1676	0	0	5-8	2-8
I	1676	0	1676	0	0	5-8	2-8

UNFACTORED REACTIONS

JT	1ST LCASE COMBINED	MAX./MIN. COMPONENT REACTIONS SNOW	LIVE	PERM.LIVE	WIND	DEAD	SOIL
Q	1198	712 / 0	0 / 0	0 / 0	0 / 0	486 / 0	0 / 0
I	1198	712 / 0	0 / 0	0 / 0	0 / 0	486 / 0	0 / 0

BEARING MATERIAL TO BE SPF NO.2 OR BETTER AT JOINT(S) Q, I

BRACING

FOR SECTION C-E, MAX. PURLIN SPACING = 2.00 FT.
FOR OTHER SECTIONS, TOP CHORD TO BE SHEATHED OR MAX. PURLIN SPACING = 4.89 FT.
MAX. UNBRACED BOTTOM CHORD LENGTH = 10.00 FT OR RIGID CEILING DIRECTLY APPLIED.

ALL PITCH BREAKS AND PERIMETER CORNER JOINTS MUST BE LATERALLY RESTRAINED.

1 LATERAL BRACE(S) AT 1/ 2 LENGTH OF D-M.

END VERTICAL(S) MUST BE SHEATHED OR HAVE BRACES AS INDICATED IN THE MAX. UNBRACED LENGTH COLUMN OF THE TABLE BELOW

LOADING

TOTAL LOAD CASES: (4)

CHORDS

MEMB. FR-TO	MAX. FACTORED FORCE (LBS)	FACTORED VERT. LOAD LC1 (PLF) FROM	TO	MAX CSI (LC)	MAX. UNBRAC LENGTH
A- B	-1631 / 0	-78.0	-78.0	0.31 (1)	4.89
B- C	-1469 / 0	-78.0	-78.0	0.29 (1)	5.11
C- D	-1284 / 0	-85.5	-85.5	0.32 (1)	2.00
D- E	-1284 / 0	-85.5	-85.5	0.32 (1)	2.00
E- F	-1469 / 0	-78.0	-78.0	0.29 (1)	5.11
F- G	-1631 / 0	-78.0	-78.0	0.31 (1)	4.89
Q- A	-1486 / 0	0.0	0.0	0.15 (1)	6.72
I- G	-1486 / 0	0.0	0.0	0.15 (1)	6.72
R- Q	0 / 0	-96.5	-96.5	0.16 (1)	10.00
Q- P	0 / 0	-18.5	-18.5	0.11 (4)	10.00
P- O	0 / 1276	-18.5	-18.5	0.26 (1)	10.00
O- N	0 / 1105	-18.5	-18.5	0.23 (1)	10.00
N- M	0 / 1105	-18.5	-18.5	0.23 (1)	10.00
M- L	0 / 1105	-18.5	-18.5	0.23 (1)	10.00
L- K	0 / 1105	-18.5	-18.5	0.23 (1)	10.00
K- J	0 / 1276	-18.5	-18.5	0.26 (1)	10.00
J- I	0 / 0	-18.5	-18.5	0.11 (4)	10.00
I- H	0 / 0	-96.5	-96.5	0.16 (1)	10.00

WEBS

MEMB. FR-TO	MAX. FACTORED FORCE (LBS)	MAX CSI (LC)
P- B	-165 / 9	0.08 (1)
B- O	-253 / 0	0.27 (1)
O- C	0 / 279	0.06 (1)
C- M	0 / 369	0.06 (1)
M- D	-549 / 0	0.36 (1)
M- E	0 / 369	0.06 (1)
K- E	0 / 279	0.06 (1)
K- F	-253 / 0	0.27 (1)
J- F	-165 / 9	0.08 (1)
A- P	0 / 1304	0.29 (1)
J- G	0 / 1304	0.29 (1)

DESIGN CRITERIA

SPECIFIED LOADS:

TOP CH.	LL	=	21.0	PSF
	DL	=	6.0	PSF
BOT CH.	LL	=	0.0	PSF
	DL	=	7.4	PSF
TOTAL LOAD		=	34.4	PSF

SPACING = 24.0 IN. C/C

LOADING IN FLAT SECTION BASED ON PIGGYBACK TRUSS WITH SLOPES OF 6.00/12 AND -6.00/12 AND RESPECTIVE WALL HEIGHTS OF 0-0 AND 0-0 AND AN ADDITIONAL DEAD LOAD OF 3.0 P.S.F.

THIS TRUSS IS DESIGNED FOR RESIDENTIAL OR SMALL BUILDING REQUIREMENTS OF PART 9, NBCC 2010, NBCC 2015

THIS DESIGN COMPLIES WITH:
- PART 9 OF OBC 2012, OBC 2018
- CSA 086-09, CSA 086-14
- TPIC 2011, TPIC 2014

(55 % OF 23.0 P.S.F. G.S.L. PLUS 8.4 P.S.F. RAIN LOAD) EQUALS 21.0 P.S.F. SPECIFIED ROOF LIVE LOAD

ALLOWABLE DEFL.(LL)= L/360 (1.03")
CALCULATED VERT. DEFL.(LL) = L/ 999 (0.05")
ALLOWABLE DEFL.(TL)= L/360 (1.03")
CALCULATED VERT. DEFL.(TL) = L/ 999 (0.10")

CANTILEVER DEFLECTION:
ALLOWABLE DEFL.(LL)= L/120 (0.19")
CALCULATED VERT. DEFL.(LL) = L/ 999 (0.01")
ALLOWABLE DEFL.(TL)= L/120 (0.19")
CALCULATED VERT. DEFL.(TL) = L/ 999 (0.01")

CSI: TC=0.32/1.00 (C-D:1) , BC=0.26/1.00 (O-P:1) , WB=0.36/1.00 (D-M:1) , SSI=0.22/1.00 (C-D:1)

DOL LUMBER=1.00 NAIL=1.00 LS BEND=1.10 COMP=1.10 SHEAR=1.10 TENS= 1.10

COMPANION LIVE LOAD FACTOR = 1.00

TRUSS PLATE MANUFACTURER IS NOT RESPONSIBLE FOR QUALITY CONTROL IN THE TRUSS MANUFACTURING PLANT .

NAIL VALUES

PLATE	GRIP(DRY) (PSI) MAX	MIN	SHEAR (PLI) MAX	MIN	SECTION (PLI) MAX	MIN
MT20	618	354	1667	788	1987	1656

PLATE PLACEMENT TOL. = 0.250 inches

PLATE ROTATION TOL. = 5.0 Deg.

JSI GRIP= 0.78 (P) (INPUT = 0.90)
JSI METAL= 0.48 (P) (INPUT = 1.00)

A-18023271

JOB NAME	TRUSS NAME	QUANTITY	PLY	JOB DESC.	DRWG NO.
291811	H3A	1	2	TRUSS DESC.	

Alpa Roof Truss, Maple

Version 8.200 S Jan 6 2018 MiTek Industries, Inc. Fri Feb 16 12:54:51 2018 Page 1

ID:84gOFYESM8s1JmDO6_uSGRyQWjP-9RAWQ?ck46Ov1dtcgVzhSZSwVCJZKsc1GVY19hzkZwl

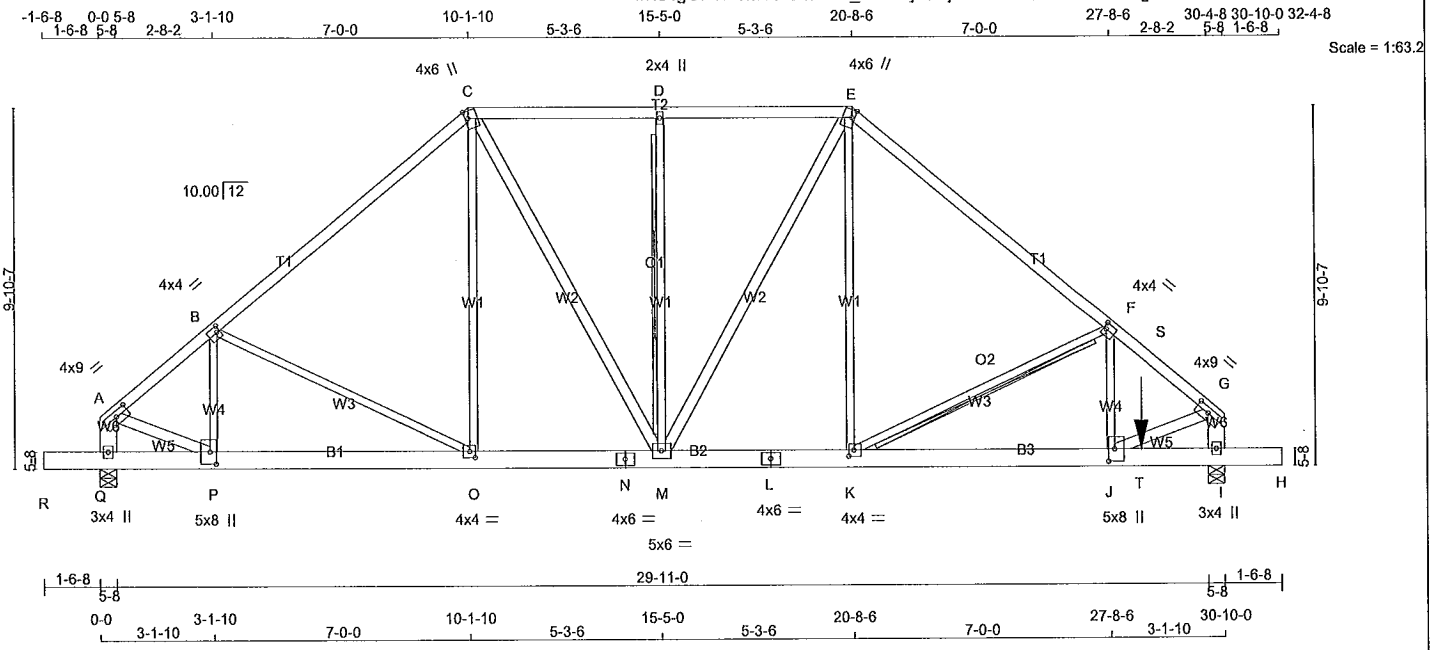

TOTAL WEIGHT = 2 X 177 = 354 lb

[M]

LUMBER

N. L. G. A. RULES

CHORDS	SIZE		LUMBER	DESCR.
A - C	2x4	DRY	No.2	SPF
C - E	2x4	DRY	No.2	SPF
E - G	2x4	DRY	No.2	SPF
Q - A	2x6	DRY	No.2	SPF
I - G	2x6	DRY	No.2	SPF
R - N	2x6	DRY	No.2	SPF
N - L	2x6	DRY	No.2	SPF
L - H	2x6	DRY	No.2	SPF
ALL WEBS EXCEPT	2x3	DRY	No.2	SPF
C - M	2x4	DRY	No.2	SPF
M - E	2x4	DRY	No.2	SPF
A - P	2x4	DRY	No.2	SPF
J - G	2x4	DRY	No.2	SPF

DRY: SEASONED LUMBER.

DESIGN CONSISTS OF 2 TRUSSES BUILT SEPARATELY THEN FASTENED TOGETHER AS FOLLOWS:

CHORDS	#ROWS	SURFACE SPACING (IN)	LOAD(PLF)
TOP CHORDS : (0.122"X3") SPIRAL NAILS			
A- C	1	12	TOP
C- E	1	12	TOP
E- G	1	12	SIDE(46.2)
Q- A	2	12	TOP
I- G	2	12	TOP
BOTTOM CHORDS : (0.122"X3") SPIRAL NAILS			
R- N	2	12	TOP
N- L	2	12	TOP
L- H	2	12	SIDE(16.0)
WEBS : (0.122"X3") SPIRAL NAILS			
2x3	1	6	
2x4	1	6	

NAILS TO BE DRIVEN FROM ONE SIDE ONLY.

GIRDER NAILING ASSUMES NAILED HANGERS ARE FASTENED WITH MIN. 3-0 INCH NAILS.

NOTE: Lateral brace(s) shown shall be 1x4 for Part 9 design as per OBC 9.23.13.11, and no less than 2x4 for Part 4 design

REGISTERED PROFESSIONAL ENGINEER
02/16/2018
EDWIN C. FOK
PROVINCE OF ONTARIO

DIMENSIONS, SUPPORTS AND LOADINGS SPECIFIED BY FABRICATOR TO BE VERIFIED BY BUILDING DESIGNER

BEARINGS

JT	FACTORED GROSS REACTION VERT	HORZ	MAXIMUM FACTORED GROSS REACTION DOWN	HORZ	UPLIFT	INPUT BRG IN-SX	REQRD BRG IN-SX
Q	1934	0	1934	0	0	5-8	1-8
I	5007	0	5007	0	0	5-8	2-10

UNFACTORED REACTIONS

JT	1ST LCASE COMBINED	MAX./MIN. COMPONENT REACTIONS SNOW	LIVE	PERM.LIVE	WIND	DEAD	SOIL
Q	1378	847 / 0	0 / 0	0 / 0	0 / 0	531 / 0	0 / 0
I	3519	2436 / 0	0 / 0	0 / 0	0 / 0	1083 / 0	0 / 0

BEARING MATERIAL TO BE SPF NO.2 OR BETTER AT JOINT(S) Q, I

BRACING

FOR SECTION C-E, MAX. PURLIN SPACING = 2.00 FT.
FOR OTHER SECTIONS, TOP CHORD TO BE SHEATHED OR MAX. PURLIN SPACING = 4.20 FT.
MAX. UNBRACED BOTTOM CHORD LENGTH = 10.00 FT OR RIGID CEILING DIRECTLY APPLIED.

ALL PITCH BREAKS AND PERIMETER CORNER JOINTS MUST BE LATERALLY RESTRAINED.

2x4 DRY SPF No.2 T-BRACE AT D-M, F-K

FASTEN T AND I-BRACES TO NARROW EDGE OF WEB WITH ONE ROW PER PLY OF 3" COMMON WIRE NAILS @ 6" O.C. WITH 3" MINIMUM END DISTANCE. BRACE MUST COVER 90% OF WEB LENGTH.

END VERTICAL(S) MUST BE SHEATHED OR HAVE BRACES AS INDICATED IN THE MAX. UNBRACED LENGTH COLUMN OF THE TABLE BELOW

LOADING

TOTAL LOAD CASES: (4)

CHORDS

MEMB. FR-TO	MAX. FACTORED FORCE (LBS)	FACTORED VERT. LOAD (PLF) FROM	TO	LC1 MAX CSI (LC)	MAX. UNBRAC LENGTH
A- B	-1904 / 0	-78.0	-78.0	0.28 (1)	5.96
B- C	-1848 / 0	-78.0	-78.0	0.35 (1)	6.02
C- D	-1716 / 0	-85.5	-85.5	0.24 (1)	2.00
D- E	-1716 / 0	-85.5	-85.5	0.24 (1)	2.00
E- F	-2197 / 0	-78.0	-78.0	0.39 (1)	5.62
F- S	-4368 / 0	-78.0	-78.0	0.36 (1)	4.20
S- G	-4368 / 0	-198.2	-198.2	0.36 (1)	4.20
Q- A	-1761 / 0	0.0	0.0	0.06 (1)	7.81
I- G	-4097 / 0	0.0	0.0	0.15 (1)	7.03
R- Q	0 / 0	-96.5	-96.5	0.04 (1)	10.00
Q- P	0 / 0	-18.5	-18.5	0.03 (4)	10.00
P- O	0 / 1517	-18.5	-18.5	0.13 (1)	10.00
O- N	0 / 1395	-18.5	-18.5	0.11 (1)	10.00
N- M	0 / 1395	-18.5	-18.5	0.11 (1)	10.00
M- L	0 / 1669	-18.5	-18.5	0.14 (1)	10.00
L- K	0 / 1669	-18.5	-18.5	0.14 (1)	10.00
K- J	0 / 3395	-18.5	-18.5	0.38 (1)	10.00
J- T	0 / 0	-18.5	-18.5	0.61 (1)	10.00
T- I	0 / 0	-47.0	-47.0	0.61 (1)	10.00
I- H	0 / 0	-96.5	-96.5	0.04 (1)	10.00

WEBS

MEMB. FR-TO	MAX. FACTORED FORCE (LBS)	MAX CSI (LC)
P- B	-393 / 0	0.05 (1)
B- O	-140 / 0	0.09 (1)
O- C	0 / 186	0.03 (4)
C- M	0 / 660	0.06 (1)
M- D	-545 / 0	0.27 (1)
M- E	0 / 96	0.01 (4)
K- E	0 / 904	0.11 (1)
K- F	-1947 / 0	0.62 (1)
J- F	0 / 1656	0.20 (1)
A- P	0 / 1593	0.14 (1)
J- G	0 / 3564	0.32 (1)

FACTORED CONCENTRATED LOADS (LBS)

JT	LOC.	LC1	MAX-	MAX+	FACE	DIR.	TYPE
T	28-6-6	-3243	-3243	---	FRONT	VERT	TOTAL

DESIGN CRITERIA

*** SPECIAL LOADS ANALYSIS ***
GEOMETRY AND/OR BASIC LOADS CHANGED BY USER.
LOADS WERE DERIVED FROM USER INPUT
NO FURTHER MODIFICATIONS WERE MADE

SPECIFIED LOADS:

TOP CH.	LL	=	21.0	PSF
	DL	=	6.0	PSF
BOT CH.	LL	=	0.0	PSF
	DL	=	7.4	PSF
TOTAL LOAD		=	34.4	PSF

SPACING = 24.0 IN. C/C

LOADING IN FLAT SECTION BASED ON PIGGYBACK TRUSS WITH SLOPES OF 6.00/12 AND -6.00/12 AND RESPECTIVE WALL HEIGHTS OF 0-0 AND 0-0 AND AN ADDITIONAL DEAD LOAD OF 3.0 P.S.F.

GIRDER TYPE: CPrimeHip
SIDE SETBACK = 0-0
END SETBACK = 8-2-0
END WALL WIDTH = 0-0
CORNER FRAMING TYPE: CONVENTIONAL
END JACK TYPE: CONVENTIONAL
APPLIED TO FRONT SIDE
- ADDT'L LOADS BASED ON 55 % OF GSL.
LOADS APPLIED TO FIRST 2-4-0 OF SPAN MEASURED FROM THE RIGHT.

*** NON STANDARD GIRDER ***
ADDT'L USER-DEFINED LOADS APPLIED TO ALL LOAD CASES.

THIS TRUSS IS DESIGNED FOR RESIDENTIAL OR SMALL BUILDING REQUIREMENTS OF PART 9, NBCC 2010, NBCC 2015

THIS DESIGN COMPLIES WITH:
- PART 9 OF OBC 2012, OBC 2018
- CSA 086-09, CSA 086-14
- TPIC 2011, TPIC 2014

(55 % OF 23.0 P.S.F. G.S.L. PLUS 8.4 P.S.F. RAIN LOAD) EQUALS 21.0 P.S.F. SPECIFIED ROOF LIVE LOAD

ALLOWABLE DEFL.(LL)= L/360 (1.03")
CALCULATED VERT. DEFL.(LL) = L/ 999 (0.04")
ALLOWABLE DEFL.(TL)= L/360 (1.03")
CALCULATED VERT. DEFL.(TL) = L/ 999 (0.07")

CANTILEVER DEFLECTION:
ALLOWABLE DEFL.(LL)= L/120 (0.19")
CALCULATED VERT. DEFL.(LL) = L/ 999 (0.00")
ALLOWABLE DEFL.(TL)= L/120 (0.19")
CALCULATED VERT. DEFL.(TL) = L/ 999 (0.00")

CSI: TC=0.39/1.00 (E-F:1) , BC=0.61/1.00 (I-J:1) , WB=0.62/1.00 (F-K:1) , SSI=0.86/1.00 (I-J:1)

DOL LUMBER=1.00 NAIL=1.00 LS BEND=1.00 COMP=1.00 SHEAR=1.00 TENS= 1.00

COMPANION LIVE LOAD FACTOR = 1.00

A-18023272

CONTINUED ON PAGE 2

PLATES (table is in inches)

JT	TYPE	PLATES	W	LEN	Y	X
A	TMVW-t	MT20	4.0	9.0	1.75	4.25
B	TMWW-t	MT20	4.0	4.0	2.00	1.00
C	TTWW+m	MT20	4.0	6.0	Edge	1.00
D	TMW+w	MT20	2.0	4.0		
E	TTWW+m	MT20	4.0	6.0	Edge	1.00
F	TMWW-t	MT20	4.0	4.0	2.00	1.00
G	TMVW-t	MT20	4.0	9.0	1.75	4.25
I	BMV1+p	MT20	3.0	4.0		
J	BMWW+t	MT20	5.0	8.0	4.00	2.00
K	BMWW-t	MT20	4.0	4.0	2.00	1.75
L	BS-t	MT20	4.0	6.0		
M	BMWWW-t	MT20	5.0	6.0		
N	BS-t	MT20	4.0	6.0		
O	BMWW-t	MT20	4.0	4.0	2.00	1.75
P	BMWW+t	MT20	5.0	8.0	4.00	2.00
Q	BMV1+p	MT20	3.0	4.0		

Edge - INDICATES REFERENCE CORNER OF PLATE TOUCHES EDGE OF CHORD.

HANGERS NOTES

1) SPECIAL HANGER(S) OR CONNECTION(S) REQUIRED TO SUPPORT CONCENTRATED LOAD(S) 3243.2 lbs FACTORED DOWN AT 28-6-6 ON BOTTOM CHORD. DESIGN FOR UNSPECIFIED CONNECTION(S) IS DELEGATED TO THE BUILDING DESIGNER.

NOTE: Lateral brace(s) shown shall be 1x4 for Part 9 design as per OBC 9.23.13.11, and no less than 2x4 for Part 4 design

REGISTERED PROFESSIONAL ENGINEER
02/16/2018
EDWIN C. FOK
PROVINCE OF ONTARIO

AUTOSOLVE HEELS OFF

TRUSS PLATE MANUFACTURER IS NOT RESPONSIBLE FOR QUALITY CONTROL IN THE TRUSS MANUFACTURING PLANT .

NAIL VALUES

PLATE	GRIP(DRY) (PSI)		SHEAR (PLI)		SECTION (PLI)	
	MAX	MIN	MAX	MIN	MAX	MIN
MT20	618	354	1667	788	1987	1656

PLATE PLACEMENT TOL. = 0.250 inches

PLATE ROTATION TOL. = 5.0 Deg.

JSI GRIP= 0.85 (G) (INPUT = 0.90)
JSI METAL= 0.61 (P) (INPUT = 1.00)

A-1802327 2(M)

JOB NAME	TRUSS NAME	QUANTITY	PLY	JOB DESC.	DRWG NO.
291811	H3B	1	2	TRUSS DESC.	

Alpa Roof Truss, Maple

Version 8.200 S Jan 6 2018 MiTek Industries, Inc. Fri Feb 16 13:01:38 2018 Page 1

ID:84gOFYESM8s1JmDO6_uSGRyQWjP-kkGNrAX1E9f9MAUq0Tm8SOpRhGEzBraxrJe3xczkZpx

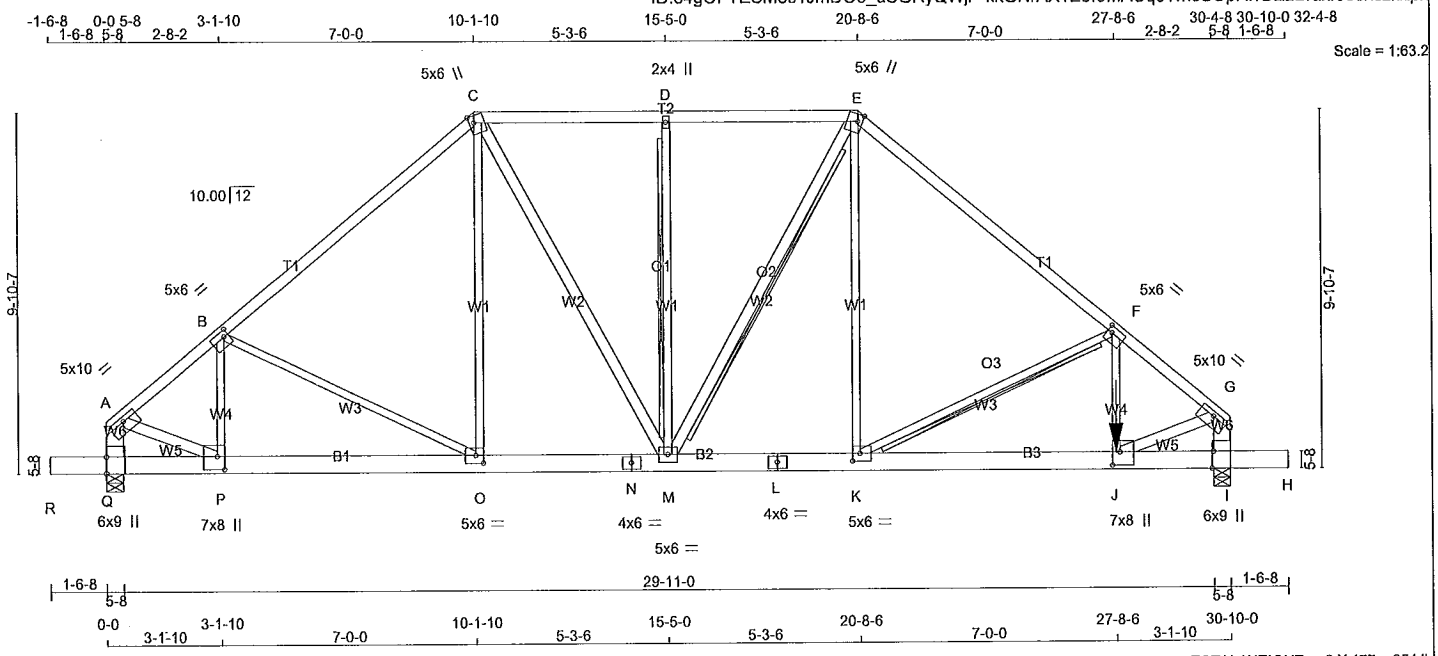

TOTAL WEIGHT = 2 X 177 = 354 lb

[M]

LUMBER

N. L. G. A. RULES

CHORDS	SIZE		LUMBER	DESCR.
A - C	2x4	DRY	No.2	SPF
C - E	2x4	DRY	No.2	SPF
E - G	2x4	DRY	No.2	SPF
Q - A	2x6	DRY	No.2	SPF
I - G	2x6	DRY	No.2	SPF
R - N	2x6	DRY	No.2	SPF
N - L	2x6	DRY	No.2	SPF
L - H	2x6	DRY	No.2	SPF
ALL WEBS EXCEPT	2x3	DRY	No.2	SPF
C - M	2x4	DRY	No.2	SPF
M - E	2x4	DRY	No.2	SPF
A - P	2x4	DRY	No.2	SPF
J - G	2x4	DRY	No.2	SPF

DRY: SEASONED LUMBER.

DESIGN CONSISTS OF 2 TRUSSES BUILT SEPARATELY THEN FASTENED TOGETHER AS FOLLOWS:

CHORDS	#ROWS	SURFACE SPACING (IN)	LOAD(PLF)
TOP CHORDS : (0.122"X3") SPIRAL NAILS			
A- C	1	12	TOP
C- E	1	12	TOP
E- G	1	12	TOP
Q- A	2	12	TOP
I- G	2	12	TOP
BOTTOM CHORDS : (0.122"X3") SPIRAL NAILS			
R- N	2	12	TOP
N- L	2	12	TOP
L- H	2	2	SIDE(1256.2)
WEBS : (0.122"X3") SPIRAL NAILS			
F- J	1	3	SIDE(478.1)
2x3	1	6	
2x4	1	6	

NAILS TO BE DRIVEN FROM ONE SIDE ONLY.

GIRDER NAILING ASSUMES NAILED HANGERS ARE FASTENED WITH MIN. 3-0 INCH NAILS.

NOTE: Lateral brace(s) shown shall be 1x4 for Part 9 design as per OBC 9.23.13.11, and no less than 2x4 for Part 4 design

REGISTERED PROFESSIONAL ENGINEER
02/16/2018
EDWIN C. FOK
PROVINCE OF ONTARIO

DIMENSIONS, SUPPORTS AND LOADINGS SPECIFIED BY FABRICATOR TO BE VERIFIED BY BUILDING DESIGNER

BEARINGS

JT	FACTORED GROSS REACTION VERT	HORZ	MAXIMUM FACTORED GROSS REACTION DOWN	HORZ	UPLIFT	INPUT BRG IN-SX	REQRD BRG IN-SX
Q	2396	0	2396	0	0	5-8	1-8
I	8631	0	8631	0	0	5-8	5-8

UNFACTORED REACTIONS

JT	1ST LCASE COMBINED	SNOW	MAX./MIN. COMPONENT REACTIONS LIVE	PERM.LIVE	WIND	DEAD	SOIL
Q	1700	1086 / 0	0 / 0	0 / 0	0 / 0	614 / 0	0 / 0
I	6050	4272 / 0	0 / 0	0 / 0	0 / 0	1779 / 0	0 / 0

BEARING MATERIAL TO BE SPF NO.2 OR BETTER AT JOINT(S) Q, I
BEARING SIZE FACTOR = 1.15 AT JNT(S) I (BASED ON SUPPORT DEPTH = 1-8)

BRACING

FOR SECTION C-E, MAX. PURLIN SPACING = 2.00 FT.
FOR OTHER SECTIONS, TOP CHORD TO BE SHEATHED OR MAX. PURLIN SPACING = 2.91 FT.
MAX. UNBRACED BOTTOM CHORD LENGTH = 10.00 FT OR RIGID CEILING DIRECTLY APPLIED.

ALL PITCH BREAKS AND PERIMETER CORNER JOINTS MUST BE LATERALLY RESTRAINED.

2x4 DRY SPF No.2 T-BRACE AT D-M
2x6 DRY SPF No.2 T-BRACE AT E-M, F-K

FASTEN T AND I-BRACES TO NARROW EDGE OF WEB WITH ONE ROW PER PLY OF 3" COMMON WIRE NAILS @ 6" O.C. WITH 3" MINIMUM END DISTANCE. BRACE MUST COVER 90% OF WEB LENGTH.

END VERTICAL(S) MUST BE SHEATHED OR HAVE BRACES AS INDICATED IN THE MAX. UNBRACED LENGTH COLUMN OF THE TABLE BELOW

LOADING

TOTAL LOAD CASES: (4)

CHORDS

MEMB. FR-TO	MAX. FACTORED FORCE (LBS)	FACTORED VERT. LOAD LC1 (PLF) FROM	TO	MAX CSI (LC)	MAX. UNBRAC LENGTH
A- B	-2420 / 0	-78.0	-78.0	0.29 (1)	5.43
B- C	-2494 / 0	-78.0	-78.0	0.40 (1)	5.36
C- D	-2463 / 0	-85.5	-85.5	0.25 (1)	2.00
D- E	-2463 / 0	-85.5	-85.5	0.25 (1)	2.00
E- F	-3512 / 0	-78.0	-78.0	0.51 (1)	4.66
F- G	-8690 / 0	-78.0	-78.0	0.52 (1)	2.91
Q- A	-2219 / 0	0.0	0.0	0.08 (1)	7.81
I- G	-7780 / 0	0.0	0.0	0.28 (1)	5.39
R- Q	0 / 0	-96.5	-96.5	0.04 (1)	10.00
Q- P	0 / 0	-18.5	-18.5	0.03 (4)	10.00
P- O	0 / 1914	-18.5	-18.5	0.15 (1)	10.00
O- N	0 / 1890	-18.5	-18.5	0.15 (1)	10.00
N- M	0 / 1890	-18.5	-18.5	0.15 (1)	10.00
M- L	0 / 2698	-18.5	-18.5	0.22 (1)	10.00
L- K	0 / 2698	-18.5	-18.5	0.22 (1)	10.00
K- J	0 / 6722	-18.5	-18.5	0.53 (1)	10.00
J- I	0 / 0	-396.3	-396.3	0.23 (1)	10.00
I- H	0 / 0	-96.5	-96.5	0.04 (1)	10.00

WEBS

MEMB. FR-TO	MAX. FACTORED FORCE (LBS)	MAX CSI (LC)
P- B	-527 / 0	0.07 (1)
B- O	-28 / 0	0.02 (1)
O- C	0 / 148	0.03 (4)
C- M	0 / 1177	0.10 (1)
M- D	-538 / 0	0.26 (1)
M- E	-484 / 0	0.09 (1)
K- E	0 / 2246	0.28 (1)
K- F	-4542 / 0	0.93 (1)
J- F	0 / 4895	0.61 (1)
A- P	0 / 2009	0.18 (1)
J- G	0 / 7057	0.62 (1)

FACTORED CONCENTRATED LOADS (LBS)

JT	LOC.	LC1	MAX-	MAX+	FACE	DIR.	TYPE
J	27-8-6	-6491	-6491	—	FRONT	VERT	TOTAL

DESIGN CRITERIA

*** SPECIAL LOADS ANALYSIS ***
GEOMETRY AND/OR BASIC LOADS CHANGED BY USER.
LOADS WERE DERIVED FROM USER INPUT
NO FURTHER MODIFICATIONS WERE MADE

SPECIFIED LOADS:

TOP CH.	LL	=	21.0	PSF
	DL	=	6.0	PSF
BOT CH.	LL	=	0.0	PSF
	DL	=	7.4	PSF
TOTAL LOAD		=	34.4	PSF

SPACING = 24.0 IN. C/C

LOADING IN FLAT SECTION BASED ON PIGGYBACK TRUSS WITH SLOPES OF 6.00/12 AND -6.00/12 AND RESPECTIVE WALL HEIGHTS OF 0-0 AND 0-0 AND AN ADDITIONAL DEAD LOAD OF 3.0 P.S.F.

GIRDER TYPE: CStdGirder
START DISTANCE = 27-8-6
START SPAN CARRIED = 17-8-0
END DISTANCE = 30-10-0
END SPAN CARRIED = 17-8-0
END WALL WIDTH = 0-0
APPLIED TO FRONT SIDE OF BOTTOM CHORD.
- ADDT'L LOADS BASED ON 55 % OF GSL.

*** NON STANDARD GIRDER ***
ADDT'L USER-DEFINED LOADS APPLIED TO ALL LOAD CASES.

THIS TRUSS IS DESIGNED FOR RESIDENTIAL OR SMALL BUILDING REQUIREMENTS OF PART 9, NBCC 2010, NBCC 2015

THIS DESIGN COMPLIES WITH:
- PART 9 OF OBC 2012, OBC 2018
- CSA 086-09, CSA 086-14
- TPIC 2011, TPIC 2014

(55 % OF 23.0 P.S.F. G.S.L. PLUS 8.4 P.S.F. RAIN LOAD) EQUALS 21.0 P.S.F. SPECIFIED ROOF LIVE LOAD

ALLOWABLE DEFL.(LL)= L/360 (1.03")
CALCULATED VERT. DEFL.(LL) = L/ 999 (0.08")
ALLOWABLE DEFL.(TL)= L/360 (1.03")
CALCULATED VERT. DEFL.(TL) = L/ 999 (0.14")

CANTILEVER DEFLECTION:
ALLOWABLE DEFL.(LL)= L/120 (0.19")
CALCULATED VERT. DEFL.(LL) = L/ 999 (0.00")
ALLOWABLE DEFL.(TL)= L/120 (0.19")
CALCULATED VERT. DEFL.(TL) = L/ 999 (0.00")

CSI: TC=0.52/1.00 (F-G:1) , BC=0.53/1.00 (J-K:1) , WB=0.93/1.00 (F-K:1) , SSI=0.23/1.00 (I-J:1)

DOL LUMBER=1.00 NAIL=1.00 LS BEND=1.00 COMP=1.00 SHEAR=1.00 TENS= 1.00

COMPANION LIVE LOAD FACTOR = 1.00

A-18023273

CONTINUED ON PAGE 2

JOB NAME	TRUSS NAME	QUANTITY	PLY	JOB DESC.	DRWG NO.
291811	H3B	1	2	TRUSS DESC.	

Alpa Roof Truss, Maple

ID:84gOFYESM8s1JmDO6_uSGRyQWjP-kkGNrAX1E9f9MAUq0Tm8SOpRhGEzBraxrJe3xczkZpx

PLATES (table is in inches)

JT	TYPE	PLATES	W	LEN	Y	X
A	TMVW-t	MT20	5.0	10.0	1.50	5.00
B	TMWW-t	MT20	5.0	6.0	2.00	1.50
C	TTWW+m	MT20	5.0	6.0	2.25	1.50
D	TMW+w	MT20	2.0	4.0		
E	TTWW+m	MT20	5.0	6.0	2.25	1.50
F	TMWW-t	MT20	5.0	6.0	2.00	1.50
G	TMVW-t	MT20	5.0	10.0	1.50	5.00
I	BMV1+t	MT20	6.0	9.0	Edge	0.50
J	BMWW+t	MT20	7.0	8.0	4.25	2.50
K	BMWW-t	MT20	5.0	6.0	2.50	2.50
L	BS-t	MT20	4.0	6.0		
M	BMWWW-t	MT20	5.0	6.0		
N	BS-t	MT20	4.0	6.0		
O	BMWW-t	MT20	5.0	6.0	2.50	2.50
P	BMWW+t	MT20	7.0	8.0	4.25	2.50
Q	BMV1+t	MT20	6.0	9.0	Edge	

Edge - INDICATES REFERENCE CORNER OF PLATE TOUCHES EDGE OF CHORD.

HANGERS NOTES

1) SPECIAL HANGER(S) OR CONNECTION(S) REQUIRED TO SUPPORT CONCENTRATED LOAD(S) 6490.7 lbs FACTORED DOWN AT 27-8-6 ON BOTTOM CHORD. DESIGN FOR UNSPECIFIED CONNECTION(S) IS DELEGATED TO THE BUILDING DESIGNER.

NOTE: Lateral brace(s) shown shall be 1x4 for Part 9 design as per OBC 9.23.13.11, and no less than 2x4 for Part 4 design

REGISTERED PROFESSIONAL ENGINEER
02/16/2018
EDWIN C. FOK
PROVINCE OF ONTARIO

AUTOSOLVE HEELS OFF

TRUSS PLATE MANUFACTURER IS NOT RESPONSIBLE FOR QUALITY CONTROL IN THE TRUSS MANUFACTURING PLANT .

NAIL VALUES

PLATE	GRIP(DRY) (PSI) MAX	MIN	SHEAR (PLI) MAX	MIN	SECTION (PLI) MAX	MIN
MT20	618	354	1667	788	1987	1656

PLATE PLACEMENT TOL. = 0.250 Inches

PLATE ROTATION TOL. = 5.0 Deg.

JSI GRIP= 0.88 (J) (INPUT = 0.90)
JSI METAL= 0.87 (J) (INPUT = 1.00)

A-18023273(2)

JOB NAME	TRUSS NAME	QUANTITY	PLY	JOB DESC.	DRWG NO.
291811	H3S	4	1	TRUSS DESC.	

Alpa Roof Truss, Maple

Version 8.200 S Jan 6 2018 MiTek Industries, Inc. Fri Feb 16 12:56:00 2018 Page 1
ID:84gOFYESM8s1JmDO6_uSGRyQWjP-ejrbvbS0qJ46pDesDUitl7pjs0xr?7sB7klB4BzkZvD

Scale = 1:60.4

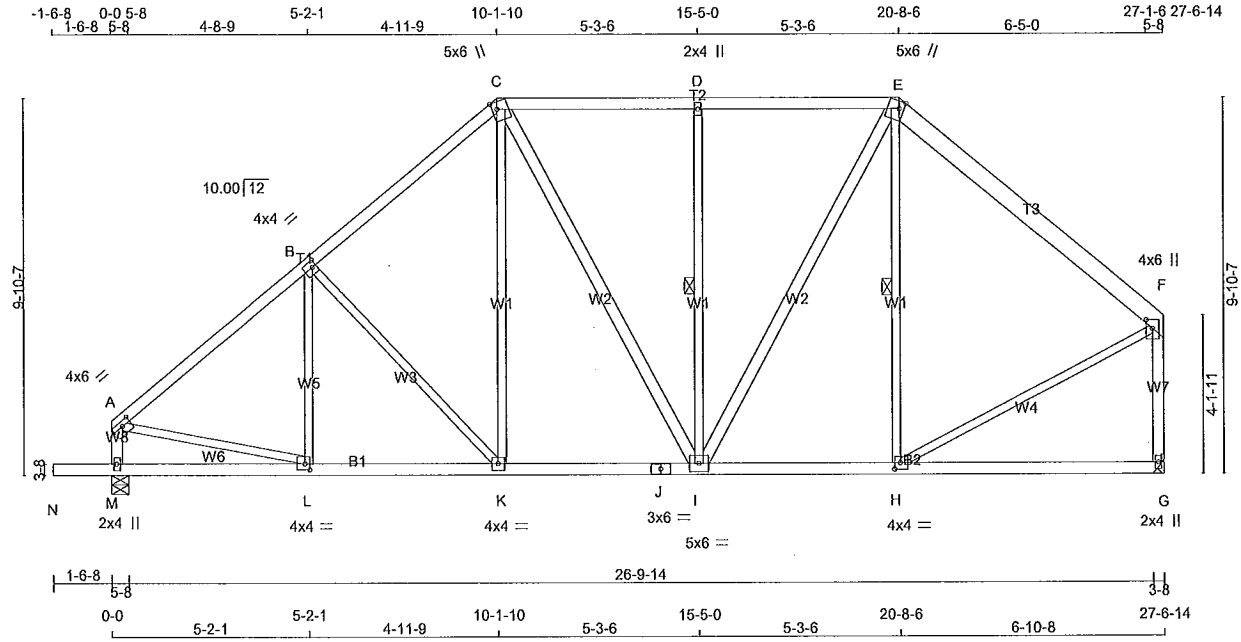

TOTAL WEIGHT = 4 X 149 = 596 lb

[M][F]

LUMBER

N. L. G. A. RULES

CHORDS	SIZE		LUMBER	DESCR.
A - C	2x4	DRY	No.2	SPF
C - E	2x4	DRY	No.2	SPF
E - F	2x6	DRY	No.2	SPF
M - A	2x4	DRY	No.2	SPF
G - F	2x4	DRY	No.2	SPF
N - J	2x4	DRY	No.2	SPF
J - G	2x4	DRY	No.2	SPF
ALL WEBS	2x3	DRY	No.2	SPF
EXCEPT				
C - I	2x4	DRY	No.2	SPF
I - E	2x4	DRY	No.2	SPF

DRY: SEASONED LUMBER.

PLATES (table is in inches)

JT	TYPE	PLATES	W	LEN	Y	X
A	TMVW-t	MT20	4.0	6.0	1.50	2.75
B	TMWW-t	MT20	4.0	4.0	2.00	1.25
C	TTWW+m	MT20	5.0	6.0	2.25	1.50
D	TMW+w	MT20	2.0	4.0		
E	TTWW+m	MT20	5.0	6.0	2.25	1.50
F	TMVW+p	MT20	4.0	6.0	2.75	2.00
G	BMV1+p	MT20	2.0	4.0		
H	BMWW-t	MT20	4.0	4.0	2.00	1.75
I	BMWWW-t	MT20	5.0	6.0		
J	BS-t	MT20	3.0	6.0		
K	BMWW-t	MT20	4.0	4.0		
L	BMWW-t	MT20	4.0	4.0	1.75	1.50
M	BMV1+p	MT20	2.0	4.0		

NOTE: Lateral brace(s) shown shall be 1x4 for Part 9 design as per OBC 9.23.13.11, and no less than 2x4 for Part 4 design

REGISTERED PROFESSIONAL ENGINEER
02/16/2018
EDWIN C. FOK
PROVINCE OF ONTARIO

DIMENSIONS, SUPPORTS AND LOADINGS SPECIFIED BY FABRICATOR TO BE VERIFIED BY BUILDING DESIGNER

BEARINGS

JT	FACTORED GROSS REACTION VERT	HORZ	MAXIMUM FACTORED GROSS REACTION DOWN	HORZ	UPLIFT	INPUT BRG IN-SX	REQRD BRG IN-SX
M	1514	0	1514	0	0	5-8	2-4
G	1374	0	1374	0	0	HANGER BY OTHERS	
						MIN. SEAT SIZE: 1-8	

UNFACTORED REACTIONS

JT	1ST LCASE COMBINED	MAX./MIN. COMPONENT REACTIONS SNOW	LIVE	PERM.LIVE	WIND	DEAD	SOIL
M	1082	643 / 0	0 / 0	0 / 0	0 / 0	439 / 0	0 / 0
G	984	579 / 0	0 / 0	0 / 0	0 / 0	405 / 0	0 / 0

BEARING MATERIAL TO BE SPF NO.2 OR BETTER AT JOINT(S) M

BRACING

FOR SECTION C-E, MAX. PURLIN SPACING = 2.00 FT.
FOR OTHER SECTIONS, TOP CHORD TO BE SHEATHED OR MAX. PURLIN SPACING = 5.16 FT.
MAX. UNBRACED BOTTOM CHORD LENGTH = 10.00 FT OR RIGID CEILING DIRECTLY APPLIED.

ALL PITCH BREAKS AND PERIMETER CORNER JOINTS MUST BE LATERALLY RESTRAINED.

1 LATERAL BRACE(S) AT 1/ 2 LENGTH OF D-I, E-H.

END VERTICAL(S) MUST BE SHEATHED OR HAVE BRACES AS INDICATED IN THE MAX. UNBRACED LENGTH COLUMN OF THE TABLE BELOW

LOADING

TOTAL LOAD CASES: (4)

CHORDS

MEMB. FR-TO	MAX. FACTORED FORCE (LBS)	FACTORED VERT. LOAD LC1 (PLF) FROM	TO	MAX CSI (LC)	MAX. UNBRAC LENGTH
A- B	-1429 / 0	-78.0	-78.0	0.30 (1)	5.16
B- C	-1245 / 0	-78.0	-78.0	0.28 (1)	5.45
C- D	-1021 / 0	-85.5	-85.5	0.32 (1)	2.00
D- E	-1021 / 0	-85.5	-85.5	0.32 (1)	2.00
E- F	-1004 / 0	-78.0	-78.0	0.24 (1)	6.25
M- A	-1325 / 0	0.0	0.0	0.14 (1)	7.03
G- F	-1322 / 0	0.0	0.0	0.34 (1)	7.03
N- M	0 / 0	-96.5	-96.5	0.16 (1)	10.00
M- L	0 / 0	-18.5	-18.5	0.11 (4)	10.00
L- K	0 / 1121	-18.5	-18.5	0.24 (1)	10.00
K- J	0 / 934	-18.5	-18.5	0.21 (1)	10.00
J- I	0 / 934	-18.5	-18.5	0.21 (1)	10.00
I- H	0 / 764	-18.5	-18.5	0.28 (4)	10.00
H- G	0 / 0	-18.5	-18.5	0.20 (4)	10.00

WEBS

MEMB. FR-TO	MAX. FACTORED FORCE (LBS)	MAX CSI (LC)
L- B	-133 / 21	0.07 (1)
B- K	-278 / 0	0.30 (1)
K- C	0 / 300	0.07 (1)
C- I	0 / 181	0.03 (1)
I- D	-541 / 0	0.36 (1)
I- E	0 / 530	0.09 (1)
H- E	-270 / 0	0.18 (1)
A- L	0 / 1145	0.26 (1)
H- F	0 / 868	0.20 (1)

DESIGN CRITERIA

SPECIFIED LOADS:

TOP CH.	LL	=	21.0	PSF
	DL	=	6.0	PSF
BOT CH.	LL	=	0.0	PSF
	DL	=	7.4	PSF
TOTAL LOAD		=	34.4	PSF

SPACING = 24.0 IN. C/C

LOADING IN FLAT SECTION BASED ON PIGGYBACK TRUSS WITH SLOPES OF 6.00/12 AND -6.00/12 AND RESPECTIVE WALL HEIGHTS OF 0-0 AND 0-0 AND AN ADDITIONAL DEAD LOAD OF 3.0 P.S.F.

THIS TRUSS IS DESIGNED FOR RESIDENTIAL OR SMALL BUILDING REQUIREMENTS OF PART 9, NBCC 2010, NBCC 2015

THIS DESIGN COMPLIES WITH:
- PART 9 OF OBC 2012, OBC 2018
- CSA 086-09, CSA 086-14
- TPIC 2011, TPIC 2014

(55 % OF 23.0 P.S.F. G.S.L. PLUS 8.4 P.S.F. RAIN LOAD) EQUALS 21.0 P.S.F. SPECIFIED ROOF LIVE LOAD

ALLOWABLE DEFL.(LL)= L/360 (0.92")
CALCULATED VERT. DEFL.(LL) = L/ 999 (0.03")
ALLOWABLE DEFL.(TL)= L/360 (0.92")
CALCULATED VERT. DEFL.(TL) = L/ 999 (0.08")

CANTILEVER DEFLECTION:
ALLOWABLE DEFL.(LL)= L/120 (0.19")
CALCULATED VERT. DEFL.(LL) = L/ 999 (0.01")
ALLOWABLE DEFL.(TL)= L/120 (0.19")
CALCULATED VERT. DEFL.(TL) = L/ 999 (0.01")

CSI: TC=0.34/1.00 (F-G:1) , BC=0.28/1.00 (H-I:4) , WB=0.36/1.00 (D-I:1) , SSI=0.22/1.00 (C-D:1)

DOL LUMBER=1.00 NAIL=1.00 LS BEND=1.10 COMP=1.10 SHEAR=1.10 TENS= 1.10

COMPANION LIVE LOAD FACTOR = 1.00

TRUSS PLATE MANUFACTURER IS NOT RESPONSIBLE FOR QUALITY CONTROL IN THE TRUSS MANUFACTURING PLANT .

NAIL VALUES

PLATE	GRIP(DRY) (PSI) MAX	MIN	SHEAR (PLI) MAX	MIN	SECTION (PLI) MAX	MIN
MT20	618	354	1667	788	1987	1656

PLATE PLACEMENT TOL. = 0.250 Inches

PLATE ROTATION TOL. = 5.0 Deg.

JSI GRIP= 0.80 (L) (INPUT = 0.90)
JSI METAL= 0.49 (F) (INPUT = 1.00)

A-18023274

JOB NAME	TRUSS NAME	QUANTITY	PLY	JOB DESC.	DRWG NO.
291811	H4P	11	1	TRUSS DESC.	

Alpa Roof Truss, Maple

Version 8.200 S Jan 6 2018 MiTek Industries, Inc. Fri Feb 16 12:56:05 2018 Page 1
ID:84gOFYESM8s1JmDO6_uSGRyQWjP-_geUyJV9friPv_Xq?1I2SAWcl1fLgTJwH?TylPzkZv8

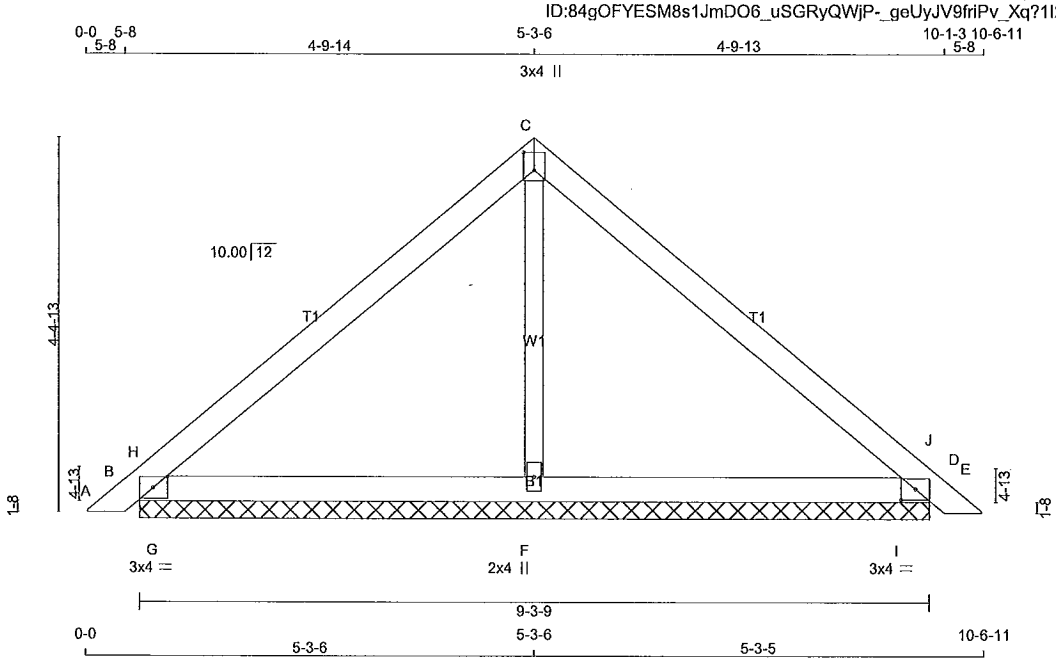

TOTAL WEIGHT = 11 X 29 = 321 lb

LUMBER
N. L. G. A. RULES

CHORDS	SIZE		LUMBER	DESCR.
A - C	2x4	DRY	No.2	SPF
C - E	2x4	DRY	No.2	SPF
B - D	2x4	DRY	No.2	SPF
ALL WEBS	2x3	DRY	No.2	SPF

DRY: SEASONED LUMBER.

PLATES (table Is In Inches)

JT	TYPE	PLATES	W	LEN	Y	X
B	TMB1-I	MT20	3.0	4.0	1.50	2.00
C	TTW+p	MT20	3.0	4.0	2.50	1.50
D	TMB1-I	MT20	3.0	4.0	1.50	2.00
F	BMW1+w	MT20	2.0	4.0		

NOTE: Lateral brace(s) shown shall be 1x4 for Part 9 design as per OBC 9.23.13.11, and no less than 2x4 for Part 4 design

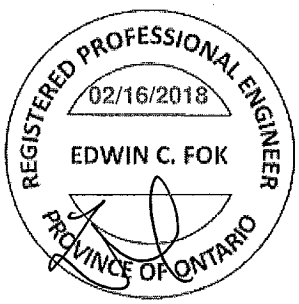

DIMENSIONS, SUPPORTS AND LOADINGS SPECIFIED BY FABRICATOR TO BE VERIFIED BY BUILDING DESIGNER

BEARINGS

JT	FACTORED GROSS REACTION VERT	HORZ	MAXIMUM FACTORED GROSS REACTION DOWN	HORZ	UPLIFT	INPUT BRG IN-SX	REQRD BRG IN-SX
B	352	0	352	0	0	9-3-9	11-8
D	352	0	352	0	0	9-3-9	11-8
F	274	0	274	0	0	9-3-9	11-8

UNFACTORED REACTIONS

JT	1ST LCASE COMBINED	MAX./MIN. COMPONENT REACTIONS SNOW	LIVE	PERM.LIVE	WIND	DEAD	SOIL
B	249	167 / 0	0 / 0	0 / 0	0 / 0	82 / 0	0 / 0
D	248	167 / 0	0 / 0	0 / 0	0 / 0	82 / 0	0 / 0
F	199	101 / 0	0 / 0	0 / 0	0 / 0	98 / 0	0 / 0

BEARING MATERIAL TO BE SPF NO.2 OR BETTER AT JOINT(S) B, D, F

BRACING
TOP CHORD TO BE SHEATHED OR MAX. PURLIN SPACING = 6.25 FT.
MAX. UNBRACED BOTTOM CHORD LENGTH = 10.00 FT OR RIGID CEILING DIRECTLY APPLIED.

ALL PITCH BREAKS AND PERIMETER CORNER JOINTS MUST BE LATERALLY RESTRAINED.

LOADING
TOTAL LOAD CASES: (4)

CHORDS

MEMB. FR-TO	MAX. FACTORED FORCE (LBS)	FACTORED VERT. LOAD LC1 (PLF) FROM	TO	MAX CSI (LC)	MAX. UNBRAC LENGTH
A- B	0 / 12	-78.0	-78.0	0.02 (1)	10.00
B- H	-33 / 71	-78.0	-78.0	0.13 (1)	6.25
H- C	-185 / 0	-78.0	-78.0	0.20 (1)	6.25
C- J	-185 / 0	-78.0	-78.0	0.20 (1)	6.25
J- D	-33 / 71	-78.0	-78.0	0.13 (1)	6.25
D- E	0 / 12	-78.0	-78.0	0.02 (1)	10.00
B- G	0 / 132	-18.5	-18.5	0.19 (1)	10.00
G- F	0 / 132	-18.5	-18.5	0.19 (1)	10.00
F- I	0 / 132	-18.5	-18.5	0.19 (1)	10.00
I- D	0 / 132	-18.5	-18.5	0.19 (1)	10.00

WEBS

MEMB. FR-TO	MAX. FACTORED FORCE (LBS)	MAX CSI (LC)
F- C	-83 / 0	0.02 (1)
G- H	-528 / 0	0.00 (1)
I- J	-528 / 0	0.00 (1)

DESIGN CRITERIA

SPECIFIED LOADS:

TOP CH.	LL	=	21.0	PSF
	DL	=	6.0	PSF
BOT CH.	LL	=	0.0	PSF
	DL	=	7.4	PSF
TOTAL LOAD		=	34.4	PSF

SPACING = 24.0 IN. C/C

THIS TRUSS IS DESIGNED FOR RESIDENTIAL OR SMALL BUILDING REQUIREMENTS OF PART 9, NBCC 2010, NBCC 2015

THIS DESIGN COMPLIES WITH:
- PART 9 OF OBC 2012, OBC 2018
- CSA 086-09, CSA 086-14
- TPIC 2011, TPIC 2014

(55 % OF 23.0 P.S.F. G.S.L. PLUS 8.4 P.S.F. RAIN LOAD) EQUALS 21.0 P.S.F. SPECIFIED ROOF LIVE LOAD

CSI: TC=0.20/1.00 (C-H:1) , BC=0.19/1.00 (B-G:1) , WB=0.02/1.00 (C-F:1) , SSI=0.40/1.00 (B-G:1)

DOL LUMBER=1.00 NAIL=1.00 LS BEND=1.10 COMP=1.10 SHEAR=1.10 TENS= 1.10

COMPANION LIVE LOAD FACTOR = 1.00

TRUSS PLATE MANUFACTURER IS NOT RESPONSIBLE FOR QUALITY CONTROL IN THE TRUSS MANUFACTURING PLANT .

NAIL VALUES

PLATE	GRIP(DRY) (PSI) MAX	MIN	SHEAR (PLI) MAX	MIN	SECTION (PLI) MAX	MIN
MT20	618	354	1667	788	1987	1656

PLATE PLACEMENT TOL. = 0.250 Inches

PLATE ROTATION TOL. = 5.0 Deg.

JSI GRIP= 0.31 (B) (INPUT = 0.90)
JSI METAL= 0.08 (D) (INPUT = 1.00)

A-18023275

JOB NAME	TRUSS NAME	QUANTITY	PLY	JOB DESC.	DRWG NO.
291811	H5A	1	1	TRUSS DESC.	

Alpa Roof Truss, Maple

Version 8.200 S Jan 6 2018 MiTek Industries, Inc. Fri Feb 16 12:58:58 2018 Page 1
ID:84gOFYESM8s1JmDO6_uSGRyQWjP-QybuGTbgv?Vs9aF4etvczfA0FmfNiWmN3QtcKtzkZsR

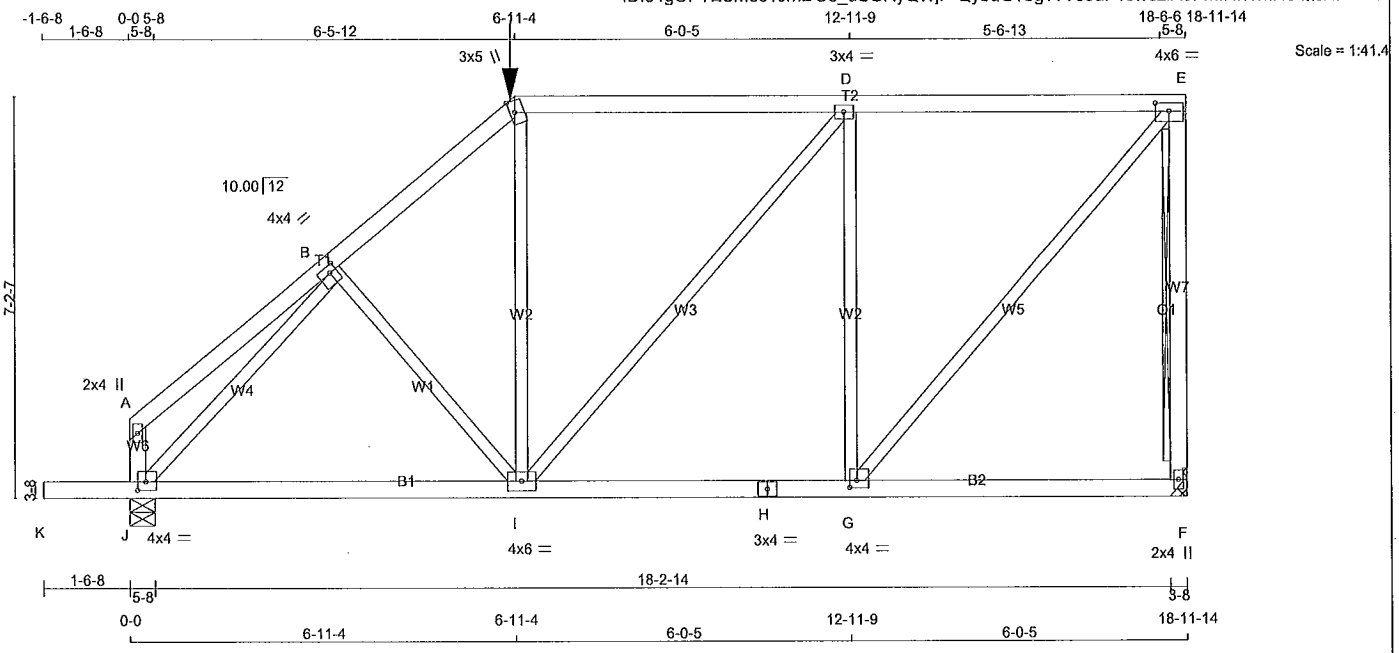

TOTAL WEIGHT = 90 lb

LUMBER
N. L. G. A. RULES

CHORDS	SIZE		LUMBER	DESCR.
A - C	2x4	DRY	No.2	SPF
C - E	2x4	DRY	No.2	SPF
F - E	2x4	DRY	No.2	SPF
J - A	2x4	DRY	No.2	SPF
K - H	2x4	DRY	No.2	SPF
H - F	2x4	DRY	No.2	SPF
ALL WEBS EXCEPT	2x3	DRY	No.2	SPF

DRY: SEASONED LUMBER.

PLATES (table is in inches)

JT	TYPE	PLATES	W	LEN	Y	X
A	TMV+p	MT20	2.0	4.0		
B	TMWW-t	MT20	4.0	4.0	1.50	1.50
C	TTW+m	MT20	3.0	5.0	Edge	1.00
D	TMWW-t	MT20	3.0	4.0		
E	TMVW-t	MT20	4.0	6.0	1.75	3.00
F	BMV1+p	MT20	2.0	4.0		
G	BMWW-t	MT20	4.0	4.0	1.50	1.50
H	BS-t	MT20	3.0	4.0		
I	BMWWW-t	MT20	4.0	6.0		
J	BMVW1-t	MT20	4.0	4.0	1.75	1.75

Edge - INDICATES REFERENCE CORNER OF PLATE TOUCHES EDGE OF CHORD.

HANGERS NOTES

1) SPECIAL HANGER(S) OR CONNECTION(S) REQUIRED TO SUPPORT CONCENTRATED LOAD(S) 216.9 lbs FACTORED DOWN AT 6-11-4 ON TOP CHORD. DESIGN FOR UNSPECIFIED CONNECTION(S) IS DELEGATED TO THE BUILDING DESIGNER.

NOTE: Lateral brace(s) shown shall be 1x4 for Part 9 design as per OBC 9.23.13.11, and no less than 2x4 for Part 4 design

REGISTERED PROFESSIONAL ENGINEER
02/16/2018
EDWIN C. FOK
PROVINCE OF ONTARIO

DIMENSIONS, SUPPORTS AND LOADINGS SPECIFIED BY FABRICATOR TO BE VERIFIED BY BUILDING DESIGNER

BEARINGS

JT	FACTORED GROSS REACTION VERT	HORZ	MAXIMUM FACTORED GROSS REACTION DOWN	HORZ	UPLIFT	INPUT BRG	REQRD BRG
F	1385	0	1385	0	0	HANGER BY OTHERS	
						MIN. SEAT SIZE: 1-8	
J	1428	0	1428	0	0	5-8	1-8

UNFACTORED REACTIONS

JT	1ST LCASE COMBINED	MAX./MIN. COMPONENT REACTIONS SNOW	LIVE	PERM.LIVE	WIND	DEAD	SOIL
F	987	606 / 0	0 / 0	0 / 0	0 / 0	381 / 0	0 / 0
J	1020	614 / 0	0 / 0	0 / 0	0 / 0	406 / 0	0 / 0

BEARING MATERIAL TO BE SPF NO.2 OR BETTER AT JOINT(S) J

BRACING

TOP CHORD TO BE SHEATHED OR MAX. PURLIN SPACING = 4.61 FT.
MAX. UNBRACED BOTTOM CHORD LENGTH = 10.00 FT OR RIGID CEILING DIRECTLY APPLIED.

ALL PITCH BREAKS AND PERIMETER CORNER JOINTS MUST BE LATERALLY RESTRAINED.

2x4 DRY SPF No.2 T-BRACE AT E-F

FASTEN T AND I-BRACES TO NARROW EDGE OF WEB WITH ONE ROW PER PLY OF 3" COMMON WIRE NAILS @ 6" O.C. WITH 3" MINIMUM END DISTANCE. BRACE MUST COVER 90% OF WEB LENGTH.

END VERTICAL(S) MUST BE SHEATHED OR HAVE BRACES AS INDICATED IN THE MAX. UNBRACED LENGTH COLUMN OF THE TABLE BELOW

LOADING

TOTAL LOAD CASES: (4)

CHORDS

MEMB. FR-TO	MAX. FACTORED FORCE (LBS)	FACTORED VERT. LOAD (PLF) FROM	TO	LC1 MAX CSI (LC)	MAX. UNBRAC LENGTH
A- B	0 / 18	-78.0	-78.0	0.15 (1)	10.00
B- C	-1241 / 0	-78.0	-78.0	0.18 (1)	5.54
C- D	-938 / 0	-115.1	-115.1	0.83 (1)	4.61
D- E	-919 / 0	-115.1	-115.1	0.83 (1)	4.66
F- E	-1316 / 0	0.0	0.0	0.39 (1)	7.81
J- A	-110 / 0	0.0	0.0	0.01 (1)	7.81
K- J	0 / 0	-96.5	-96.5	0.17 (1)	10.00
J- I	0 / 956	-27.3	-27.3	0.41 (4)	10.00
I- H	0 / 919	-27.3	-27.3	0.41 (4)	10.00
H- G	0 / 919	-27.3	-27.3	0.41 (4)	10.00
G- F	0 / 0	-27.3	-27.3	0.23 (4)	10.00

WEBS

MEMB. FR-TO	MAX. FACTORED FORCE (LBS)	MAX CSI (LC)
B- I	-32 / 27	0.02 (1)
I- C	0 / 200	0.07 (4)
I- D	0 / 31	0.01 (4)
G- D	-883 / 0	0.81 (1)
G- E	0 / 1398	0.35 (1)
J- B	-1450 / 0	0.70 (1)

FACTORED CONCENTRATED LOADS (LBS)

JT	LOC.	LC1	MAX-	MAX+	FACE	DIR.	TYPE
C	6-11-4	-217	-217	---	FRONT	VERT	TOTAL

DESIGN CRITERIA

SPECIFIED LOADS:

TOP CH.	LL =	21.0	PSF
	DL =	6.0	PSF
BOT CH.	LL =	0.0	PSF
	DL =	7.4	PSF
TOTAL LOAD	=	34.4	PSF

SPACING = 24.0 IN. C/C

LOADING IN FLAT SECTION BASED ON A SLOPE OF 2.00/12 MINIMUM

GIRDER TYPE: CPrimeHip
LEFT SETBACK = 6-11-4
RIGHT SETBACK = 0-0
END SETBACK = 3-10-14
END WALL WIDTH = 0-0
CORNER FRAMING TYPE: CONVENTIONAL
END JACK TYPE: CONVENTIONAL
APPLIED TO FRONT SIDE
- ADDT'L LOADS BASED ON 55 % OF GSL.

THIS TRUSS IS DESIGNED FOR RESIDENTIAL OR SMALL BUILDING REQUIREMENTS OF PART 9, NBCC 2010, NBCC 2015

THIS DESIGN COMPLIES WITH:
- PART 9 OF OBC 2012, OBC 2018
- CSA 086-09, CSA 086-14
- TPIC 2011, TPIC 2014

(55 % OF 23.0 P.S.F. G.S.L. PLUS 8.4 P.S.F. RAIN LOAD) EQUALS 21.0 P.S.F. SPECIFIED ROOF LIVE LOAD

ALLOWABLE DEFL.(LL)= L/360 (0.63")
CALCULATED VERT. DEFL.(LL) = L/ 999 (0.03")
ALLOWABLE DEFL.(TL)= L/360 (0.63")
CALCULATED VERT. DEFL.(TL) = L/ 999 (0.13")

CANTILEVER DEFLECTION:
ALLOWABLE DEFL.(LL)= L/120 (0.19")
CALCULATED VERT. DEFL.(LL) = L/ 999 (0.01")
ALLOWABLE DEFL.(TL)= L/120 (0.19")
CALCULATED VERT. DEFL.(TL) = L/ 999 (0.01")

CSI: TC=0.83/1.00 (C-D:1) , BC=0.41/1.00 (G-I:4) , WB=0.81/1.00 (D-G:1) , SSI=0.37/1.00 (D-E:1)

DOL LUMBER=1.00 NAIL=1.00 LS BEND=1.00 COMP=1.00 SHEAR=1.00 TENS= 1.00

COMPANION LIVE LOAD FACTOR = 1.00

AUTOSOLVE RIGHT HEEL ONLY

TRUSS PLATE MANUFACTURER IS NOT RESPONSIBLE FOR QUALITY CONTROL IN THE TRUSS MANUFACTURING PLANT .

NAIL VALUES

PLATE	GRIP(DRY) (PSI) MAX	MIN	SHEAR (PLI) MAX	MIN	SECTION (PLI) MAX	MIN
MT20	618	354	1667	788	1987	1656

A-18023276

CONTINUED ON PAGE 2

JOB NAME	TRUSS NAME	QUANTITY	PLY	JOB DESC.	DRWG NO.
291811	H6S	3	1	TRUSS DESC.	

Alpa Roof Truss, Maple

Version 8.200 S Jan 6 2018 MiTek Industries, Inc. Fri Feb 16 12:59:17 2018 Page 1

ID:84gOFYESM8s1JmDO6_uSGRyQWjP-McF4FyqbRqu9xVCjFMk3EfTP6Q9VfBVAQt_6VHzkZs8

Scale = 1:59.5

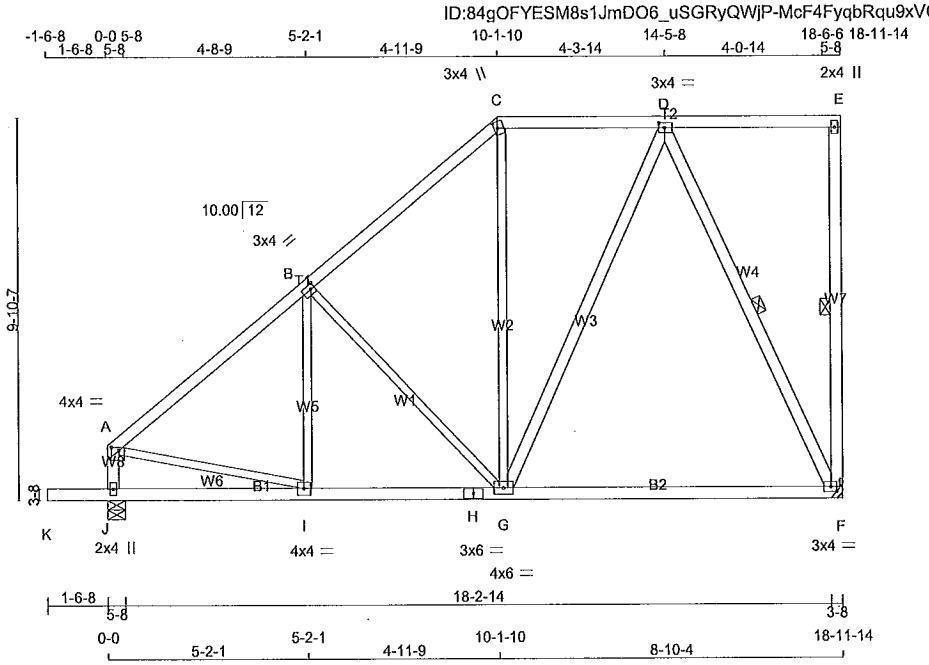

TOTAL WEIGHT = 3 X 105 = 316 lb

[M][F]

LUMBER

N. L. G. A. RULES

CHORDS	SIZE		LUMBER	DESCR.
A - C	2x4	DRY	No.2	SPF
C - E	2x4	DRY	No.2	SPF
F - E	2x4	DRY	No.2	SPF
J - A	2x4	DRY	No.2	SPF
K - H	2x4	DRY	No.2	SPF
H - F	2x4	DRY	No.2	SPF
ALL WEBS	2x3	DRY	No.2	SPF
EXCEPT				
G - D	2x4	DRY	No.2	SPF
D - F	2x4	DRY	No.2	SPF

DRY: SEASONED LUMBER.

PLATES (table is in Inches)

JT	TYPE	PLATES	W	LEN	Y	X
A	TMVW-p	MT20	4.0	4.0	1.00	2.25
B	TMWW-t	MT20	3.0	4.0	1.50	1.25
C	TTW+m	MT20	3.0	4.0	2.00	1.00
D	TMWW-t	MT20	3.0	4.0	1.50	1.75
E	TMV+p	MT20	2.0	4.0		
F	BMVW1-t	MT20	3.0	4.0	1.50	1.75
G	BMWWW-t	MT20	4.0	6.0		
H	BS-t	MT20	3.0	6.0		
I	BMWW-t	MT20	4.0	4.0		
J	BMV1+p	MT20	2.0	4.0		

NOTE: Lateral brace(s) shown shall be 1x4 for Part 9 design as per OBC 9.23.13.11, and no less than 2x4 for Part 4 design

REGISTERED PROFESSIONAL ENGINEER
02/16/2018
EDWIN C. FOK
PROVINCE OF ONTARIO

DIMENSIONS, SUPPORTS AND LOADINGS SPECIFIED BY FABRICATOR TO BE VERIFIED BY BUILDING DESIGNER

BEARINGS

JT	FACTORED GROSS REACTION VERT	HORZ	MAXIMUM FACTORED GROSS REACTION DOWN	HORZ	UPLIFT	INPUT BRG	REQRD BRG
F	967	0	967	0	0	IN-SX	IN-SX
						HANGER BY OTHERS	
						MIN. SEAT SIZE: 1-8	
J	1080	0	1080	0	0	5-8	1-10

UNFACTORED REACTIONS

JT	1ST LCASE COMBINED	MAX./MIN. COMPONENT REACTIONS SNOW	LIVE	PERM.LIVE	WIND	DEAD	SOIL
F	694	399 / 0	0 / 0	0 / 0	0 / 0	295 / 0	0 / 0
J	771	463 / 0	0 / 0	0 / 0	0 / 0	308 / 0	0 / 0

BEARING MATERIAL TO BE SPF NO.2 OR BETTER AT JOINT(S) J

BRACING

FOR SECTION C-E, MAX. PURLIN SPACING = 2.00 FT.
FOR OTHER SECTIONS, TOP CHORD TO BE SHEATHED OR MAX. PURLIN SPACING = 6.20 FT.
MAX. UNBRACED BOTTOM CHORD LENGTH = 10.00 FT OR RIGID CEILING DIRECTLY APPLIED.

ALL PITCH BREAKS AND PERIMETER CORNER JOINTS MUST BE LATERALLY RESTRAINED.

1 LATERAL BRACE(S) AT 1/ 2 LENGTH OF E-F, D-F.

END VERTICAL(S) MUST BE SHEATHED OR HAVE BRACES AS INDICATED IN THE MAX. UNBRACED LENGTH COLUMN OF THE TABLE BELOW

LOADING

TOTAL LOAD CASES: (4)

CHORDS

MEMB. FR-TO	MAX. FACTORED FORCE (LBS)	FACTORED VERT. LOAD LC1 (PLF) FROM	TO	MAX CSI (LC)	MAX. UNBRAC LENGTH
A- B	-885 / 0	-78.0	-78.0	0.27 (1)	6.20
B- C	-657 / 0	-78.0	-78.0	0.26 (1)	6.25
C- D	-480 / 0	-85.5	-85.5	0.22 (1)	2.00
D- E	0 / 0	-85.5	-85.5	0.28 (1)	10.00
F- E	-148 / 0	0.0	0.0	0.07 (1)	6.25
J- A	-888 / 0	0.0	0.0	0.09 (1)	7.81
K- J	0 / 0	-96.5	-96.5	0.16 (1)	10.00
J- I	0 / 0	-18.5	-18.5	0.12 (4)	10.00
I- H	0 / 703	-18.5	-18.5	0.37 (4)	10.00
H- G	0 / 703	-18.5	-18.5	0.37 (4)	10.00
G- F	0 / 356	-18.5	-18.5	0.33 (4)	10.00

WEBS

MEMB. FR-TO	MAX. FACTORED FORCE (LBS)	MAX CSI (LC)
I- B	-70 / 30	0.03 (1)
B- G	-326 / 0	0.35 (1)
G- C	0 / 118	0.04 (4)
G- D	0 / 310	0.05 (1)
D- F	-832 / 0	0.49 (1)
A- I	0 / 718	0.16 (1)

DESIGN CRITERIA

SPECIFIED LOADS:

TOP CH.	LL	=	21.0	PSF
	DL	=	6.0	PSF
BOT CH.	LL	=	0.0	PSF
	DL	=	7.4	PSF
TOTAL LOAD		=	34.4	PSF

SPACING = 24.0 IN. C/C

LOADING IN FLAT SECTION BASED ON PIGGYBACK TRUSS WITH SLOPES OF 6.00/12 AND -6.00/12 AND RESPECTIVE WALL HEIGHTS OF 0-0 AND 0-0 AND AN ADDITIONAL DEAD LOAD OF 3.0 P.S.F.

THIS TRUSS IS DESIGNED FOR RESIDENTIAL OR SMALL BUILDING REQUIREMENTS OF PART 9, NBCC 2010, NBCC 2015

THIS DESIGN COMPLIES WITH:
- PART 9 OF OBC 2012, OBC 2018
- CSA 086-09, CSA 086-14
- TPIC 2011, TPIC 2014

(55 % OF 23.0 P.S.F. G.S.L. PLUS 8.4 P.S.F. RAIN LOAD) EQUALS 21.0 P.S.F. SPECIFIED ROOF LIVE LOAD

ALLOWABLE DEFL.(LL)= L/360 (0.63")
CALCULATED VERT. DEFL.(LL) = L/ 999 (0.02")
ALLOWABLE DEFL.(TL)= L/360 (0.63")
CALCULATED VERT. DEFL.(TL) = L/ 999 (0.17")

CANTILEVER DEFLECTION:
ALLOWABLE DEFL.(LL)= L/120 (0.19")
CALCULATED VERT. DEFL.(LL) = L/ 999 (0.01")
ALLOWABLE DEFL.(TL)= L/120 (0.19")
CALCULATED VERT. DEFL.(TL) = L/ 999 (0.01")

CSI: TC=0.28/1.00 (D-E:1) , BC=0.37/1.00 (G-I:4) , WB=0.49/1.00 (D-F:1) , SSI=0.19/1.00 (D-E:1)

DOL LUMBER=1.00 NAIL=1.00 LS BEND=1.10 COMP=1.10 SHEAR=1.10 TENS= 1.10

COMPANION LIVE LOAD FACTOR = 1.00

TRUSS PLATE MANUFACTURER IS NOT RESPONSIBLE FOR QUALITY CONTROL IN THE TRUSS MANUFACTURING PLANT .

NAIL VALUES

PLATE	GRIP(DRY) (PSI) MAX	MIN	SHEAR (PLI) MAX	MIN	SECTION (PLI) MAX	MIN
MT20	618	354	1667	788	1987	1656

PLATE PLACEMENT TOL. = 0.250 inches

PLATE ROTATION TOL. = 5.0 Deg.

JSI GRIP= 0.90 (F) (INPUT = 0.90)
JSI METAL= 0.49 (H) (INPUT = 1.00)

A-18023277

JOB NAME	TRUSS NAME	QUANTITY	PLY	JOB DESC.	DRWG NO.
291811	H7	5	1	TRUSS DESC.	

Alpa Roof Truss, Maple

Version 8.200 S Jan 6 2018 MiTek Industries, Inc. Fri Feb 16 12:59:50 2018 Page 1

ID:84gOFYESM8s1JmDO6_uSGRyQWjP-vykYAFEHgz3UPZD3hnqp4dK2OjQ2t9y10WTM8szkZrd

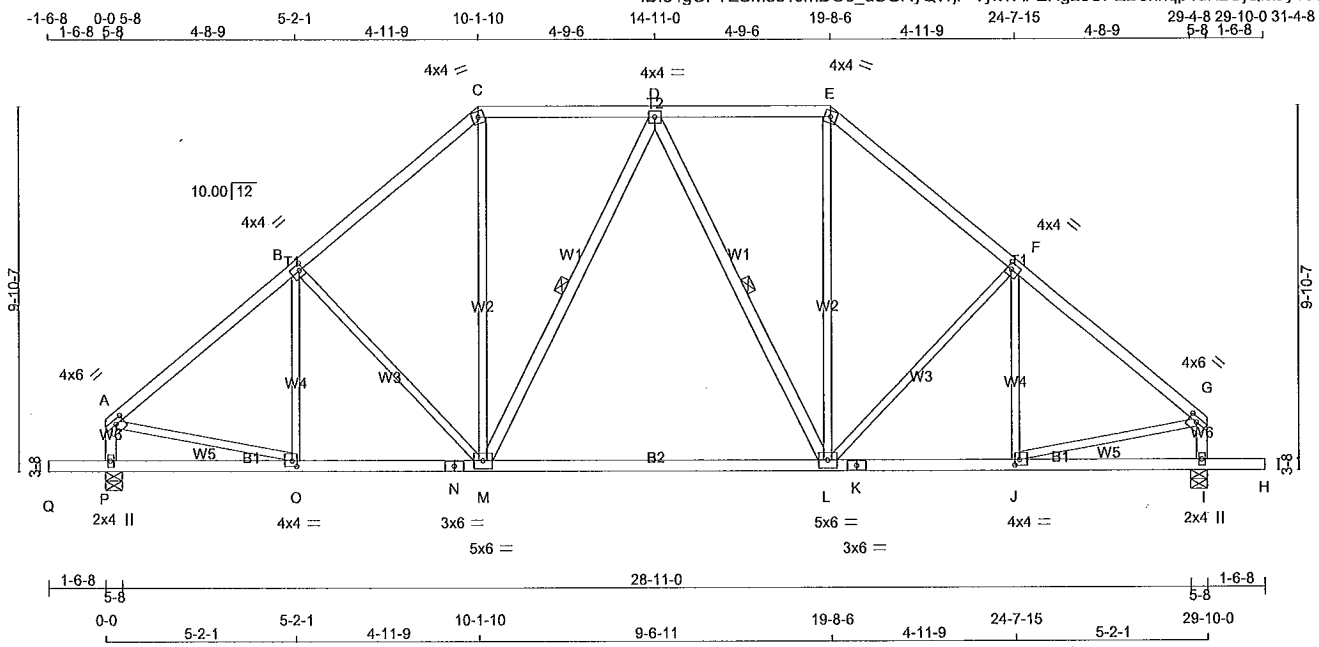

TOTAL WEIGHT = 5 X 148 = 740 lb

LUMBER

N. L. G. A. RULES

CHORDS	SIZE		LUMBER	DESCR.
A - C	2x4	DRY	No.2	SPF
C - E	2x4	DRY	No.2	SPF
E - G	2x4	DRY	No.2	SPF
P - A	2x4	DRY	No.2	SPF
I - G	2x4	DRY	No.2	SPF
Q - N	2x4	DRY	No.2	SPF
N - K	2x4	DRY	No.2	SPF
K - H	2x4	DRY	No.2	SPF
ALL WEBS EXCEPT	2x3	DRY	No.2	SPF
M - D	2x4	DRY	No.2	SPF
D - L	2x4	DRY	No.2	SPF

DRY: SEASONED LUMBER.

PLATES (table is in inches)

JT	TYPE	PLATES	W	LEN	Y	X
A	TMVW-t	MT20	4.0	6.0	1.50	2.75
B	TMWW-t	MT20	4.0	4.0	2.00	1.25
C	TTW-m	MT20	4.0	4.0		
D	TMWW-t	MT20	4.0	4.0		
E	TTW-m	MT20	4.0	4.0		
F	TMWW-t	MT20	4.0	4.0	2.00	1.25
G	TMVW-t	MT20	4.0	6.0	1.50	2.75
I	BMV1+p	MT20	2.0	4.0		
J	BMWW-t	MT20	4.0	4.0	1.75	1.50
K	BS-t	MT20	3.0	6.0		
L	BMWWW-t	MT20	5.0	6.0		
M	BMWWW-t	MT20	5.0	6.0		
N	BS-t	MT20	3.0	6.0		
O	BMWW-t	MT20	4.0	4.0	1.75	1.50
P	BMV1+p	MT20	2.0	4.0		

NOTE: Lateral brace(s) shown shall be 1x4 for Part 9 design as per OBC 9.23.13.11, and no less than 2x4 for Part 4 design

REGISTERED PROFESSIONAL ENGINEER
02/16/2018
EDWIN C. FOK
PROVINCE OF ONTARIO

DIMENSIONS, SUPPORTS AND LOADINGS SPECIFIED BY FABRICATOR TO BE VERIFIED BY BUILDING DESIGNER

BEARINGS

JT	FACTORED GROSS REACTION VERT	HORZ	MAXIMUM FACTORED GROSS REACTION DOWN	HORZ	UPLIFT	INPUT BRG IN-SX	REQRD BRG IN-SX
P	1624	0	1624	0	0	5-8	2-6
I	1624	0	1624	0	0	5-8	2-6

UNFACTORED REACTIONS

JT	1ST LCASE COMBINED	MAX./MIN. COMPONENT REACTIONS SNOW	LIVE	PERM.LIVE	WIND	DEAD	SOIL
P	1161	691 / 0	0 / 0	0 / 0	0 / 0	470 / 0	0 / 0
I	1161	691 / 0	0 / 0	0 / 0	0 / 0	470 / 0	0 / 0

BEARING MATERIAL TO BE SPF NO.2 OR BETTER AT JOINT(S) P, I

BRACING

FOR SECTION C-E, MAX. PURLIN SPACING = 2.00 FT.
FOR OTHER SECTIONS, TOP CHORD TO BE SHEATHED OR MAX. PURLIN SPACING = 4.98 FT.
MAX. UNBRACED BOTTOM CHORD LENGTH = 10.00 FT OR RIGID CEILING DIRECTLY APPLIED.

ALL PITCH BREAKS AND PERIMETER CORNER JOINTS MUST BE LATERALLY RESTRAINED.

1 LATERAL BRACE(S) AT 1/ 2 LENGTH OF D-M, D-L.

END VERTICAL(S) MUST BE SHEATHED OR HAVE BRACES AS INDICATED IN THE MAX. UNBRACED LENGTH COLUMN OF THE TABLE BELOW

LOADING

TOTAL LOAD CASES: (4)

CHORDS

MEMB. FR-TO	MAX. FACTORED FORCE (LBS)	FACTORED VERT. LOAD LC1 (PLF) FROM	TO	MAX CSI (LC)	MAX. UNBRAC LENGTH
A- B	-1562 / 0	-78.0	-78.0	0.30 (1)	4.98
B- C	-1407 / 0	-78.0	-78.0	0.29 (1)	5.20
C- D	-1061 / 0	-85.5	-85.5	0.26 (1)	2.00
D- E	-1061 / 0	-85.5	-85.5	0.26 (1)	2.00
E- F	-1407 / 0	-78.0	-78.0	0.29 (1)	5.20
F- G	-1562 / 0	-78.0	-78.0	0.30 (1)	4.98
P- A	-1431 / 0	0.0	0.0	0.15 (1)	6.82
I- G	-1431 / 0	0.0	0.0	0.15 (1)	6.82
Q- P	0 / 0	-96.5	-96.5	0.16 (1)	10.00
P- O	0 / 0	-18.5	-18.5	0.11 (4)	10.00
O- N	0 / 1223	-18.5	-18.5	0.38 (4)	10.00
N- M	0 / 1223	-18.5	-18.5	0.38 (4)	10.00
M- L	0 / 1182	-18.5	-18.5	0.38 (4)	10.00
L- K	0 / 1223	-18.5	-18.5	0.38 (4)	10.00
K- J	0 / 1223	-18.5	-18.5	0.38 (4)	10.00
J- I	0 / 0	-18.5	-18.5	0.11 (4)	10.00
I- H	0 / 0	-96.5	-96.5	0.16 (1)	10.00

WEBS

MEMB. FR-TO	MAX. FACTORED FORCE (LBS)	MAX CSI (LC)
O- B	-175 / 0	0.09 (1)
B- M	-245 / 0	0.26 (1)
M- C	0 / 577	0.13 (1)
M- D	-276 / 0	0.17 (1)
D- L	-276 / 0	0.17 (1)
L- E	0 / 577	0.13 (1)
L- F	-245 / 0	0.26 (1)
J- F	-175 / 0	0.09 (1)
A- O	0 / 1249	0.28 (1)
J- G	0 / 1249	0.28 (1)

DESIGN CRITERIA

SPECIFIED LOADS:

TOP CH.	LL	=	21.0	PSF
	DL	=	6.0	PSF
BOT CH.	LL	=	0.0	PSF
	DL	=	7.4	PSF
TOTAL LOAD		=	34.4	PSF

SPACING = 24.0 IN. C/C

LOADING IN FLAT SECTION BASED ON PIGGYBACK TRUSS WITH SLOPES OF 6.00/12 AND -6.00/12 AND RESPECTIVE WALL HEIGHTS OF 0-0 AND 0-0 AND AN ADDITIONAL DEAD LOAD OF 3.0 P.S.F.

THIS TRUSS IS DESIGNED FOR RESIDENTIAL OR SMALL BUILDING REQUIREMENTS OF PART 9, NBCC 2010, NBCC 2015

THIS DESIGN COMPLIES WITH:
- PART 9 OF OBC 2012, OBC 2018
- CSA 086-09, CSA 086-14
- TPIC 2011, TPIC 2014

(55 % OF 23.0 P.S.F. G.S.L. PLUS 8.4 P.S.F. RAIN LOAD) EQUALS 21.0 P.S.F. SPECIFIED ROOF LIVE LOAD

ALLOWABLE DEFL.(LL)= L/360 (0.99")
CALCULATED VERT. DEFL.(LL) = L/ 999 (0.04")
ALLOWABLE DEFL.(TL)= L/360 (0.99")
CALCULATED VERT. DEFL.(TL) = L/ 999 (0.21")

CANTILEVER DEFLECTION:
ALLOWABLE DEFL.(LL)= L/120 (0.19")
CALCULATED VERT. DEFL.(LL) = L/ 999 (0.01")
ALLOWABLE DEFL.(TL)= L/120 (0.19")
CALCULATED VERT. DEFL.(TL) = L/ 999 (0.01")

CSI: TC=0.30/1.00 (F-G:1) , BC=0.38/1.00 (J-L:4) , WB=0.28/1.00 (G-J:1) , SSI=0.20/1.00 (C-D:1)

DOL LUMBER=1.00 NAIL=1.00 LS BEND=1.10 COMP=1.10 SHEAR=1.10 TENS= 1.10

COMPANION LIVE LOAD FACTOR = 1.00

TRUSS PLATE MANUFACTURER IS NOT RESPONSIBLE FOR QUALITY CONTROL IN THE TRUSS MANUFACTURING PLANT .

NAIL VALUES

PLATE	GRIP(DRY) (PSI) MAX	MIN	SHEAR (PLI) MAX	MIN	SECTION (PLI) MAX	MIN
MT20	618	354	1667	788	1987	1656

PLATE PLACEMENT TOL. = 0.250 inches

PLATE ROTATION TOL. = 5.0 Deg.

JSI GRIP= 0.88 (O) (INPUT = 0.90)
JSI METAL= 0.52 (N) (INPUT = 1.00)

A-18023278

JOB NAME	TRUSS NAME	QUANTITY	PLY	JOB DESC.	DRWG NO.
291811	H7A	1	2	TRUSS DESC.	

Alpa Roof Truss, Maple

Version 8.200 S Jan 6 2018 MiTek Industries, Inc. Fri Feb 16 13:10:33 2018 Page 1

ID:84gOFYESM8s1JmDO6_uSGRyQWjP-af5d760dEX3F2OtesKtbeDTpXwtX1vGgt2ktD5zkZha

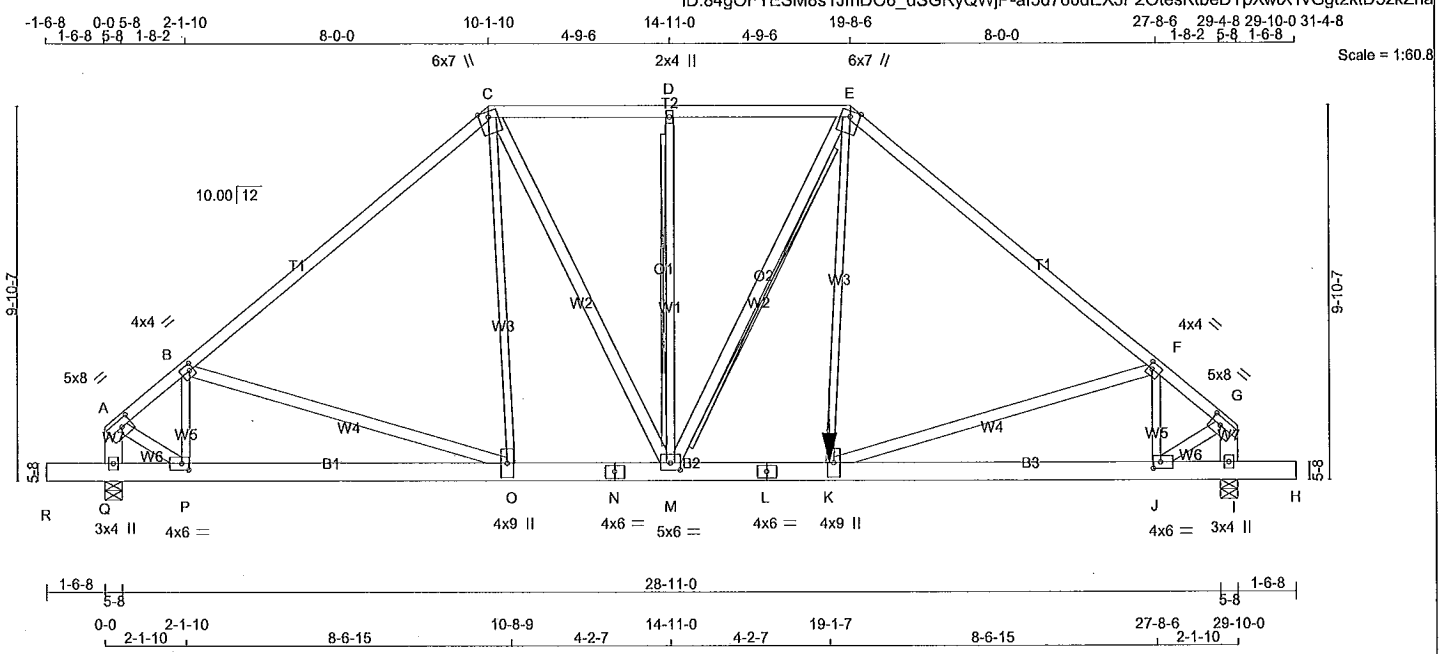

TOTAL WEIGHT = 2 X 178 = 355 lb

[M]

LUMBER

N. L. G. A. RULES

CHORDS	SIZE		LUMBER	DESCR.
A - C	2x4	DRY	1650F 1.5E	SPF
C - E	2x4	DRY	No.2	SPF
E - G	2x4	DRY	1650F 1.5E	SPF
Q - A	2x6	DRY	No.2	SPF
I - G	2x6	DRY	No.2	SPF
R - N	2x6	DRY	No.2	SPF
N - L	2x6	DRY	No.2	SPF
L - H	2x6	DRY	No.2	SPF
ALL WEBS EXCEPT	2x4	DRY	No.2	SPF
P - B	2x3	DRY	No.2	SPF
C - O	2x3	DRY	No.2	SPF
M - D	2x3	DRY	No.2	SPF
K - E	2x3	DRY	No.2	SPF
J - F	2x3	DRY	No.2	SPF

DRY: SEASONED LUMBER.

DESIGN CONSISTS OF 2 TRUSSES BUILT SEPARATELY THEN FASTENED TOGETHER AS FOLLOWS:

CHORDS	#ROWS	SURFACE SPACING (IN)	LOAD(PLF)
TOP CHORDS : (0.122"X3") SPIRAL NAILS			
A- C	1	12	TOP
C- E	1	12	TOP
E- G	1	12	TOP
Q- A	2	12	TOP
I- G	2	12	TOP
BOTTOM CHORDS : (0.122"X3") SPIRAL NAILS			
R- N	2	12	TOP
N- L	2	12	TOP
L- H	2	12	SIDE(165.4)
WEBS : (0.122"X3") SPIRAL NAILS			
K- E	1	6	SIDE(916.5)
2x3	1	6	
2x4	1	6	

NAILS TO BE DRIVEN FROM ONE SIDE ONLY.

GIRDER NAILING ASSUMES NAILED HANGERS ARE FASTENED WITH MIN. 3-0 INCH NAILS.

NOTE: Lateral brace(s) shown shall be 1x4 for Part 9 design as per OBC 9.23.13.11, and no less than 2x4 for Part 4 design

REGISTERED PROFESSIONAL ENGINEER
02/16/2018
EDWIN C. FOK
PROVINCE OF ONTARIO

DIMENSIONS, SUPPORTS AND LOADINGS SPECIFIED BY FABRICATOR TO BE VERIFIED BY BUILDING DESIGNER

BEARINGS

JT	FACTORED GROSS REACTION VERT	HORZ	MAXIMUM FACTORED GROSS REACTION DOWN	HORZ	UPLIFT	INPUT BRG IN-SX	REQRD BRG IN-SX
Q	3195	0	3195	0	0	5-8	1-11
I	4666	0	4666	0	0	5-8	2-7

UNFACTORED REACTIONS

JT	1ST LCASE COMBINED	MAX./MIN. COMPONENT REACTIONS SNOW	LIVE	PERM.LIVE	WIND	DEAD	SOIL
Q	2254	1510 / 0	0 / 0	0 / 0	0 / 0	743 / 0	0 / 0
I	3281	2256 / 0	0 / 0	0 / 0	0 / 0	1025 / 0	0 / 0

BEARING MATERIAL TO BE SPF NO.2 OR BETTER AT JOINT(S) Q, I

BRACING

FOR SECTION C-E, MAX. PURLIN SPACING = 2.00 FT.
FOR OTHER SECTIONS, TOP CHORD TO BE SHEATHED OR MAX. PURLIN SPACING = 4.38 FT.
MAX. UNBRACED BOTTOM CHORD LENGTH = 10.00 FT OR RIGID CEILING DIRECTLY APPLIED.

ALL PITCH BREAKS AND PERIMETER CORNER JOINTS MUST BE LATERALLY RESTRAINED.

2x4 DRY SPF No.2 T-BRACE AT D-M
2x6 DRY SPF No.2 T-BRACE AT E-M

FASTEN T AND I-BRACES TO NARROW EDGE OF WEB WITH ONE ROW PER PLY OF 3" COMMON WIRE NAILS @ 6" O.C. WITH 3" MINIMUM END DISTANCE. BRACE MUST COVER 90% OF WEB LENGTH.

END VERTICAL(S) MUST BE SHEATHED OR HAVE BRACES AS INDICATED IN THE MAX. UNBRACED LENGTH COLUMN OF THE TABLE BELOW

LOADING

TOTAL LOAD CASES: (4)

CHORDS

MEMB. FR-TO	MAX. FACTORED FORCE (LBS)	FACTORED VERT. LOAD (PLF) FROM	TO	LC1	MAX CSI (LC)	MAX. UNBRAC LENGTH
A- B	-2977 / 0	-78.0	-78.0	0.32 (1)	5.52	
B- C	-3607 / 0	-78.0	-78.0	0.56 (1)	5.13	
C- D	-3666 / 0	-85.5	-85.5	0.24 (1)	2.00	
D- E	-3666 / 0	-85.5	-85.5	0.24 (1)	2.00	
E- F	-5325 / 0	-78.0	-78.0	0.79 (1)	4.38	
F- G	-4538 / 0	-78.0	-78.0	0.33 (1)	4.69	
Q- A	-2981 / 0	0.0	0.0	0.11 (1)	7.81	
I- G	-4548 / 0	0.0	0.0	0.16 (1)	6.76	
R- Q	0 / 0	-96.5	-96.5	0.04 (1)	10.00	
Q- P	0 / 0	-18.5	-18.5	0.05 (4)	10.00	
P- O	0 / 2398	-18.5	-18.5	0.20 (1)	10.00	
O- N	0 / 2739	-18.5	-18.5	0.22 (1)	10.00	
N- M	0 / 2739	-18.5	-18.5	0.22 (1)	10.00	
M- L	0 / 4322	-18.5	-18.5	0.31 (1)	10.00	
L- K	0 / 4322	-18.5	-18.5	0.31 (1)	10.00	
K- J	0 / 3593	-63.7	-63.7	0.38 (1)	10.00	
J- I	0 / 0	-63.7	-63.7	0.12 (1)	10.00	
I- H	0 / 0	-96.5	-96.5	0.04 (1)	10.00	

WEBS

MEMB. FR-TO	MAX. FACTORED FORCE (LBS)	MAX CSI (LC)
P- B	-1082 / 0	0.10 (1)
B- O	0 / 357	0.03 (1)
C- O	0 / 133	0.03 (4)
M- D	-470 / 0	0.23 (1)
K- E	0 / 4271	0.53 (1)
K- F	0 / 488	0.04 (1)
J- F	-1218 / 0	0.12 (1)
A- P	0 / 2649	0.23 (1)
J- G	0 / 3970	0.35 (1)
C- M	0 / 2059	0.18 (1)
M- E	-1455 / 0	0.26 (1)

FACTORED CONCENTRATED LOADS (LBS)

JT	LOC.	LC1	MAX-	MAX+	FACE	DIR.	TYPE
K	19-1-6	-4129	-4129	---	FRONT	VERT	TOTAL

DESIGN CRITERIA

*** SPECIAL LOADS ANALYSIS ***
GEOMETRY AND/OR BASIC LOADS CHANGED BY USER.
LOADS WERE DERIVED FROM USER INPUT
NO FURTHER MODIFICATIONS WERE MADE

SPECIFIED LOADS:

TOP CH.	LL	=	21.0	PSF
	DL	=	6.0	PSF
BOT CH.	LL	=	0.0	PSF
	DL	=	7.4	PSF
TOTAL LOAD		=	34.4	PSF

SPACING = 24.0 IN. C/C

LOADING IN FLAT SECTION BASED ON PIGGYBACK TRUSS WITH SLOPES OF 6.00/12 AND -6.00/12 AND RESPECTIVE WALL HEIGHTS OF 0-0 AND 0-0 AND AN ADDITIONAL DEAD LOAD OF 3.0 P.S.F.

GIRDER TYPE: CStdGirder
START DISTANCE = 19-1-6
START SPAN CARRIED = 3-10-8
END DISTANCE = 29-10-0
END SPAN CARRIED = 3-10-8
END WALL WIDTH = 0-0
APPLIED TO FRONT SIDE OF BOTTOM CHORD.
- ADDT'L LOADS BASED ON 55 % OF GSL.

*** NON STANDARD GIRDER ***
ADDT'L USER-DEFINED LOADS APPLIED TO ALL LOAD CASES.

THIS TRUSS IS DESIGNED FOR RESIDENTIAL OR SMALL BUILDING REQUIREMENTS OF PART 9, NBCC 2010, NBCC 2015

THIS DESIGN COMPLIES WITH:
- PART 9 OF OBC 2012, OBC 2018
- CSA 086-09, CSA 086-14
- TPIC 2011, TPIC 2014

DESIGN ASSUMPTIONS
-OVERHANG NOT TO BE ALTERED OR CUT OFF.

(55 % OF 23.0 P.S.F. G.S.L. PLUS 8.4 P.S.F. RAIN LOAD) EQUALS 21.0 P.S.F. SPECIFIED ROOF LIVE LOAD

ALLOWABLE DEFL.(LL)= L/360 (0.99")
CALCULATED VERT. DEFL.(LL) = L/ 999 (0.09")
ALLOWABLE DEFL..(TL)= L/360 (0.99")
CALCULATED VERT. DEFL.(TL) = L/ 999 (0.17")

CANTILEVER DEFLECTION:
ALLOWABLE DEFL.(LL)= L/120 (0.19")
CALCULATED VERT. DEFL.(LL) = L/ 999 (0.01")
ALLOWABLE DEFL.(TL)= L/120 (0.19")
CALCULATED VERT. DEFL.(TL) = L/ 762 (0.02")

CSI: TC=0.79/1.00 (E-F:1) , BC=0.38/1.00 (J-K:1) , WB=0.53/1.00 (E-K:1) , SSI=0.12/1.00 (B-C:1)

DOL LUMBER=1.00 NAIL=1.00 LS BEND=1.00 COMP=1.00 SHEAR=1.00 TENS= 1.00

A-18023279

CONTINUED ON PAGE 2

PLATES (table is in inches)

JT	TYPE	PLATES	W	LEN	Y	X
A	TMVW-t	MT20	5.0	8.0	2.25	3.25
B	TMWW-t	MT20	4.0	4.0	2.00	1.25
C	TTWW+m	MT20	6.0	7.0	Edge	
D	TMW+w	MT20	2.0	4.0		
E	TTWW+m	MT20	6.0	7.0	Edge	
F	TMWW-t	MT20	4.0	4.0	2.00	1.25
G	TMVW-t	MT20	5.0	8.0	2.25	3.25
I	BMV1+p	MT20	3.0	4.0		
J	BMWW-t	MT20	4.0	6.0	2.00	2.25
K	BMWW+t	MT20	4.0	9.0		
L	BS-t	MT20	4.0	6.0		
M	BMWWW-t	MT20	5.0	6.0	2.25	3.00
N	BS-t	MT20	4.0	6.0		
O	BMWW+t	MT20	4.0	9.0		
P	BMWW-t	MT20	4.0	6.0	2.00	2.25
Q	BMV1+p	MT20	3.0	4.0		

Edge - INDICATES REFERENCE CORNER OF PLATE TOUCHES EDGE OF CHORD.

HANGERS NOTES

1) SPECIAL HANGER(S) OR CONNECTION(S) REQUIRED TO SUPPORT CONCENTRATED LOAD(S) 4128.5 lbs FACTORED DOWN AT 19-1-6 ON BOTTOM CHORD. DESIGN FOR UNSPECIFIED CONNECTION(S) IS DELEGATED TO THE BUILDING DESIGNER.

NOTE: Lateral brace(s) shown shall be 1x4 for Part 9 design as per OBC 9.23.13.11, and no less than 2x4 for Part 4 design

REGISTERED PROFESSIONAL ENGINEER
02/16/2018
EDWIN C. FOK
PROVINCE OF ONTARIO

COMPANION LIVE LOAD FACTOR = 1.00

AUTOSOLVE HEELS OFF

TRUSS PLATE MANUFACTURER IS NOT RESPONSIBLE FOR QUALITY CONTROL IN THE TRUSS MANUFACTURING PLANT.

NAIL VALUES

PLATE	GRIP(DRY) (PSI) MAX	MIN	SHEAR (PLI) MAX	MIN	SECTION (PLI) MAX	MIN
MT20	618	354	1667	788	1987	1656

PLATE PLACEMENT TOL. = 0.250 inches

PLATE ROTATION TOL. = 5.0 Deg.

JSI GRIP= 0.84 (K) (INPUT = 0.90)
JSI METAL= 0.61 (O) (INPUT = 1.00)

A-180232798(N)

JOB NAME	TRUSS NAME	QUANTITY	PLY	JOB DESC.	DRWG NO.
291811	H7B	1	2	TRUSS DESC.	

Alpa Roof Truss, Maple

Version 8.200 S Jan 6 2018 MiTek Industries, Inc. Fri Feb 16 13:11:48 2018 Page 1

ID:84gOFYESM8s1JmDO6_uSGRyQWjP-t57_slwfaaWcXv63lajBA13jQ9R86p_j7DPLLFzkZgP

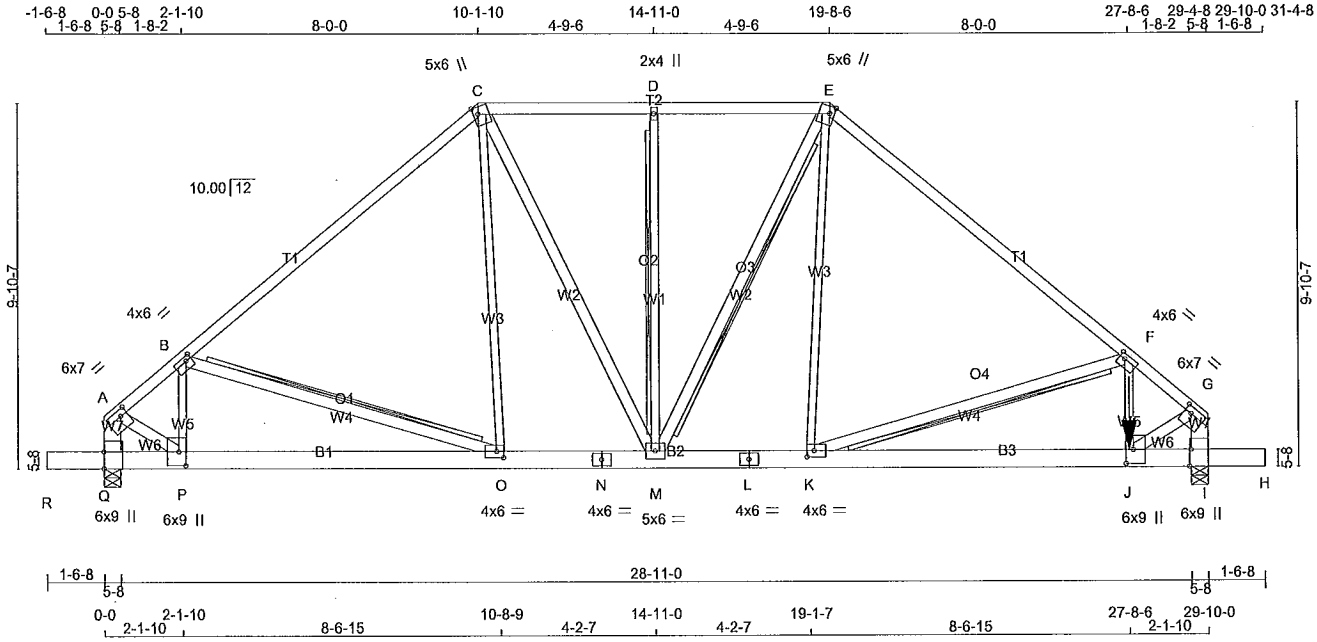

LUMBER

N. L. G. A. RULES

CHORDS	SIZE		LUMBER	DESCR.
A - C	2x4	DRY	1650F 1.5E	SPF
C - E	2x4	DRY	No.2	SPF
E - G	2x4	DRY	1650F 1.5E	SPF
Q - A	2x6	DRY	No.2	SPF
I - G	2x6	DRY	No.2	SPF
R - N	2x6	DRY	No.2	SPF
N - L	2x6	DRY	No.2	SPF
L - H	2x6	DRY	No.2	SPF
ALL WEBS EXCEPT	2x4	DRY	No.2	SPF
P - B	2x3	DRY	No.2	SPF
C - O	2x3	DRY	No.2	SPF
M - D	2x3	DRY	No.2	SPF
K - E	2x3	DRY	No.2	SPF
J - F	2x3	DRY	No.2	SPF

DRY: SEASONED LUMBER.

DESIGN CONSISTS OF 2 TRUSSES BUILT SEPARATELY THEN FASTENED TOGETHER AS FOLLOWS:

CHORDS	#ROWS	SURFACE SPACING (IN)	LOAD(PLF)
TOP CHORDS : (0.122"X3") SPIRAL NAILS			
A- C	1	12	TOP
C- E	1	12	TOP
E- G	1	12	TOP
Q- A	2	12	TOP
I- G	2	12	TOP
BOTTOM CHORDS : (0.122"X3") SPIRAL NAILS			
R- N	2	12	TOP
N- L	2	12	TOP
L- H	2	2	SIDE(1256.2)
WEBS : (0.122"X3") SPIRAL NAILS			
F- J	1	2	SIDE(478.1)
2x3	1	6	
2x4	1	6	

NAILS TO BE DRIVEN FROM ONE SIDE ONLY.

GIRDER NAILING ASSUMES NAILED HANGERS ARE FASTENED WITH MIN. 3-0 INCH NAILS.

NOTE: Lateral brace(s) shown shall be 1x4 for Part 9 design as per OBC 9.23.13.11, and no less than 2x4 for Part 4 design

REGISTERED PROFESSIONAL ENGINEER
02/16/2018
EDWIN C. FOK
PROVINCE OF ONTARIO

DIMENSIONS, SUPPORTS AND LOADINGS SPECIFIED BY FABRICATOR TO BE VERIFIED BY BUILDING DESIGNER

BEARINGS

JT	FACTORED GROSS REACTION VERT	HORZ	MAXIMUM FACTORED GROSS REACTION DOWN	HORZ	UPLIFT	INPUT BRG IN-SX	REQRD BRG IN-SX
Q	2117	0	2117	0	0	5-8	1-8
I	8428	0	8428	0	0	5-8	5-8

UNFACTORED REACTIONS

JT	1ST LCASE COMBINED	MAX./MIN. COMPONENT REACTIONS SNOW	LIVE	PERM.LIVE	WIND	DEAD	SOIL
Q	1504	948 / 0	0 / 0	0 / 0	0 / 0	556 / 0	0 / 0
I	5902	4203 / 0	0 / 0	0 / 0	0 / 0	1699 / 0	0 / 0

BEARING MATERIAL TO BE SPF NO.2 OR BETTER AT JOINT(S) Q, I
BEARING SIZE FACTOR = 1.15 AT JNT(S) I (BASED ON SUPPORT DEPTH = 1-8)

BRACING

FOR SECTION C-E, MAX. PURLIN SPACING = 2.00 FT.
FOR OTHER SECTIONS, TOP CHORD TO BE SHEATHED OR MAX. PURLIN SPACING = 3.74 FT.
MAX. UNBRACED BOTTOM CHORD LENGTH = 10.00 FT OR RIGID CEILING DIRECTLY APPLIED.

ALL PITCH BREAKS AND PERIMETER CORNER JOINTS MUST BE LATERALLY RESTRAINED.

2x4 DRY SPF No.2 T-BRACE AT B-O, D-M
2x6 DRY SPF No.2 T-BRACE AT F-K, E-M

FASTEN T AND I-BRACES TO NARROW EDGE OF WEB WITH ONE ROW PER PLY OF 3" COMMON WIRE NAILS @ 6" O.C. WITH 3" MINIMUM END DISTANCE. BRACE MUST COVER 90% OF WEB LENGTH.

END VERTICAL(S) MUST BE SHEATHED OR HAVE BRACES AS INDICATED IN THE MAX. UNBRACED LENGTH COLUMN OF THE TABLE BELOW

LOADING

TOTAL LOAD CASES: (4)

CHORDS

MEMB. FR-TO	MAX. FACTORED FORCE (LBS)	FACTORED VERT. LOAD (PLF) FROM	TO	LC1 MAX CSI (LC)	MAX. UNBRAC LENGTH
A- B	-1908 / 0	-78.0	-78.0	0.31 (1)	6.25
B- C	-2095 / 0	-78.0	-78.0	0.41 (1)	6.25
C- D	-1963 / 0	-85.5	-85.5	0.20 (1)	2.00
D- E	-1963 / 0	-85.5	-85.5	0.20 (1)	2.00
E- F	-2644 / 0	-78.0	-78.0	0.42 (1)	5.83
F- G	-7648 / 0	-78.0	-78.0	0.36 (1)	3.74
Q- A	-1911 / 0	0.0	0.0	0.07 (1)	7.81
I- G	-7665 / 0	0.0	0.0	0.28 (1)	5.42
R- Q	0 / 0	-96.5	-96.5	0.04 (1)	10.00
Q- P	0 / 0	-18.5	-18.5	0.05 (4)	10.00
P- O	0 / 1578	-18.5	-18.5	0.14 (1)	10.00
O- N	0 / 1587	-18.5	-18.5	0.14 (1)	10.00
N- M	0 / 1587	-18.5	-18.5	0.14 (1)	10.00
M- L	0 / 2095	-18.5	-18.5	0.21 (1)	10.00
L- K	0 / 2095	-18.5	-18.5	0.21 (1)	10.00
K- J	0 / 5976	-18.5	-18.5	0.50 (1)	10.00
J- I	0 / 0	-396.3	-396.3	0.13 (1)	10.00
I- H	0 / 0	-96.5	-96.5	0.04 (1)	10.00

WEBS

MEMB. FR-TO	MAX. FACTORED FORCE (LBS)	MAX CSI (LC)
P- B	-688 / 0	0.07 (1)
B- O	-7 / 0	0.00 (4)
C- O	0 / 163	0.03 (4)
M- D	-487 / 0	0.24 (1)
K- E	0 / 1515	0.19 (1)
K- F	-4178 / 0	0.55 (1)
J- F	0 / 3940	0.49 (1)
A- P	0 / 1744	0.15 (1)
J- G	0 / 6602	0.58 (1)
C- M	0 / 836	0.07 (1)
M- E	-292 / 0	0.05 (1)

FACTORED CONCENTRATED LOADS (LBS)

JT	LOC.	LC1	MAX-	MAX+	FACE	DIR.	TYPE
J	27-8-6	-6491	-6491	---	FRONT	VERT	TOTAL

[M]

DESIGN CRITERIA

*** SPECIAL LOADS ANALYSIS ***
GEOMETRY AND/OR BASIC LOADS CHANGED BY USER.
LOADS WERE DERIVED FROM USER INPUT
NO FURTHER MODIFICATIONS WERE MADE

SPECIFIED LOADS:

TOP CH.	LL =	21.0	PSF
	DL =	6.0	PSF
BOT CH.	LL =	0.0	PSF
	DL =	7.4	PSF
TOTAL LOAD	=	34.4	PSF

SPACING = 24.0 IN. C/C

LOADING IN FLAT SECTION BASED ON PIGGYBACK TRUSS WITH SLOPES OF 6.00/12 AND -6.00/12 AND RESPECTIVE WALL HEIGHTS OF 0-0 AND 0-0 AND AN ADDITIONAL DEAD LOAD OF 3.0 P.S.F.

GIRDER TYPE: CStdGirder
START DISTANCE = 27-8-6
START SPAN CARRIED = 17-8-0
END DISTANCE = 29-10-0
END SPAN CARRIED = 17-8-0
END WALL WIDTH = 0-0
APPLIED TO FRONT SIDE OF BOTTOM CHORD.
- ADDT'L LOADS BASED ON 55 % OF GSL.

*** NON STANDARD GIRDER ***
ADDT'L USER-DEFINED LOADS APPLIED TO ALL LOAD CASES.

THIS TRUSS IS DESIGNED FOR RESIDENTIAL OR SMALL BUILDING REQUIREMENTS OF PART 9, NBCC 2010, NBCC 2015

THIS DESIGN COMPLIES WITH:
- PART 9 OF OBC 2012, OBC 2018
- CSA 086-09, CSA 086-14
- TPIC 2011, TPIC 2014

DESIGN ASSUMPTIONS
-OVERHANG NOT TO BE ALTERED OR CUT OFF.

(55 % OF 23.0 P.S.F. G.S.L. PLUS 8.4 P.S.F. RAIN LOAD) EQUALS 21.0 P.S.F. SPECIFIED ROOF LIVE LOAD

ALLOWABLE DEFL.(LL)= L/360 (0.99")
CALCULATED VERT. DEFL.(LL) = L/ 999 (0.07")
ALLOWABLE DEFL.(TL)= L/360 (0.99")
CALCULATED VERT. DEFL.(TL) = L/ 999 (0.12")

CANTILEVER DEFLECTION:
ALLOWABLE DEFL.(LL)= L/120 (0.19")
CALCULATED VERT. DEFL.(LL) = L/ 512 (0.04")
ALLOWABLE DEFL.(TL)= L/120 (0.19")
CALCULATED VERT. DEFL.(TL) = L/ 302 (0.06")

CSI: TC=0.42/1.00 (E-F:1) , BC=0.50/1.00 (J-K:1) , WB=0.58/1.00 (G-J:1) , SSI=0.20/1.00 (I-J:1)

DOL LUMBER=1.00 NAIL=1.00 LS BEND=1.00 COMP=1.00 SHEAR=1.00 TENS= 1.00

A-18023280

CONTINUED ON PAGE 2

PLATES (table is in inches)

JT	TYPE	PLATES	W	LEN	Y	X
A	TMVW-t	MT20	6.0	7.0	2.00	2.25
B	TMWW-t	MT20	4.0	6.0	1.50	1.75
C	TTWW+m	MT20	5.0	6.0	2.25	1.50
D	TMW+w	MT20	2.0	4.0		
E	TTWW+m	MT20	5.0	6.0	2.25	1.50
F	TMWW-t	MT20	4.0	6.0	1.50	1.75
G	TMVW-t	MT20	6.0	7.0	2.00	2.25
I	BMV1+t	MT20	6.0	9.0	Edge	0.50
J	BMWW+t	MT20	6.0	9.0	4.50	2.25
K	BMWW-t	MT20	4.0	6.0	2.00	2.25
L	BS-t	MT20	4.0	6.0		
M	BMWWW-t	MT20	5.0	6.0		
N	BS-t	MT20	4.0	6.0		
O	BMWW-t	MT20	4.0	6.0	2.00	2.25
P	BMWW+t	MT20	6.0	9.0	4.50	2.25
Q	BMV1+t	MT20	6.0	9.0	Edge	

Edge - INDICATES REFERENCE CORNER OF PLATE TOUCHES EDGE OF CHORD.

HANGERS NOTES

1) SPECIAL HANGER(S) OR CONNECTION(S) REQUIRED TO SUPPORT CONCENTRATED LOAD(S) 6490.7 lbs FACTORED DOWN AT 27-8-6 ON BOTTOM CHORD. DESIGN FOR UNSPECIFIED CONNECTION(S) IS DELEGATED TO THE BUILDING DESIGNER.

NOTE: Lateral brace(s) shown shall be 1x4 for Part 9 design as per OBC 9.23.13.11, and no less than 2x4 for Part 4 design

REGISTERED PROFESSIONAL ENGINEER
02/16/2018
EDWIN C. FOK
PROVINCE OF ONTARIO

COMPANION LIVE LOAD FACTOR = 1.00

AUTOSOLVE HEELS OFF

TRUSS PLATE MANUFACTURER IS NOT RESPONSIBLE FOR QUALITY CONTROL IN THE TRUSS MANUFACTURING PLANT .

NAIL VALUES

PLATE	GRIP(DRY) (PSI) MAX	MIN	SHEAR (PLI) MAX	MIN	SECTION (PLI) MAX	MIN
MT20	618	354	1667	788	1987	1656

PLATE PLACEMENT TOL. = 0.250 Inches

PLATE ROTATION TOL. = 5.0 Deg.

JSI GRIP= 0.89 (F) (INPUT = 0.90)
JSI METAL= 0.90 (P) (INPUT = 1.00)

A-180232801

JOB NAME	TRUSS NAME	QUANTITY	PLY	JOB DESC.	DRWG NO.
291811	H7S	4	1	TRUSS DESC.	

Alpa Roof Truss, Maple

Version 8.200 S Jan 6 2018 MiTek Industries, Inc. Fri Feb 16 13:00:11 2018 Page 1

ID:84gOFYESM8s1JmDO6_uSGRyQWjP-n?WUaQUSjQiVQoK6QiikQ2ieCBZrIcc7rH3zO8zkZrl

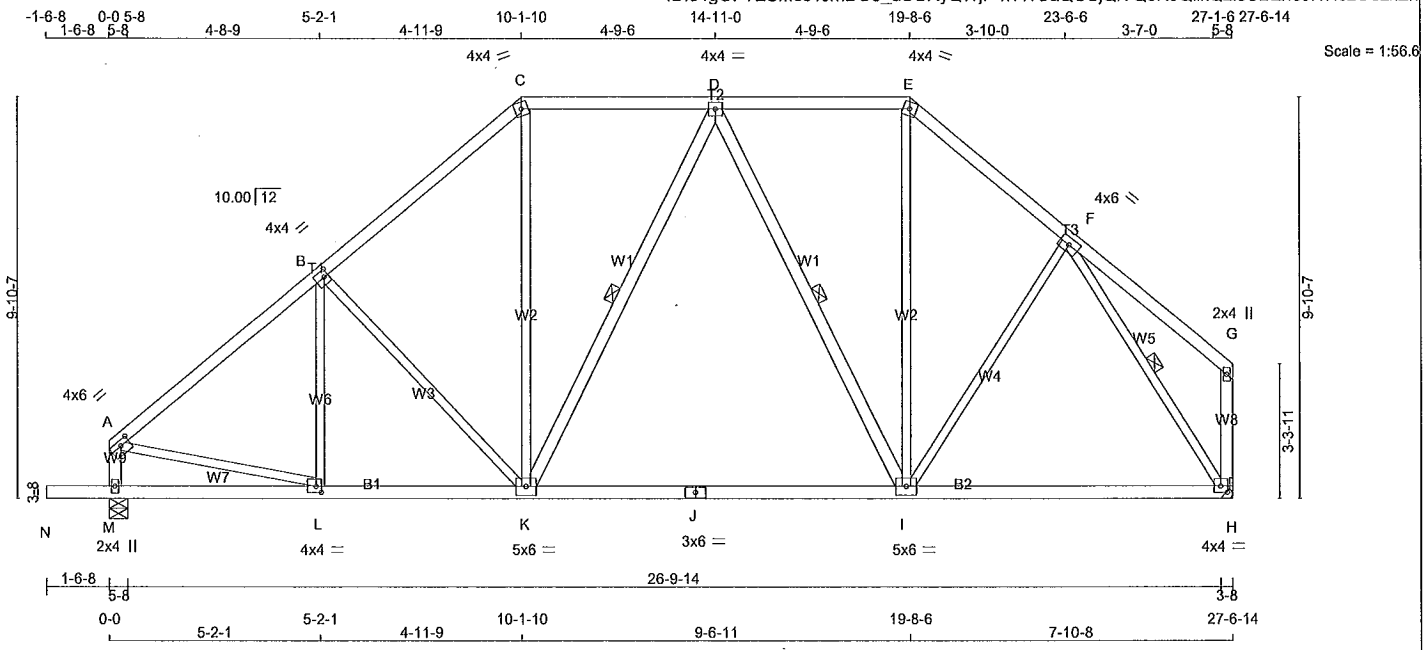

TOTAL WEIGHT = 4 X 140 = 560 lb

[M][F]

LUMBER

N. L. G. A. RULES

CHORDS	SIZE		LUMBER	DESCR.
A - C	2x4	DRY	No.2	SPF
C - E	2x4	DRY	No.2	SPF
E - G	2x4	DRY	No.2	SPF
M - A	2x4	DRY	No.2	SPF
H - G	2x4	DRY	No.2	SPF
N - J	2x4	DRY	No.2	SPF
J - H	2x4	DRY	No.2	SPF
ALL WEBS	2x3	DRY	No.2	SPF
EXCEPT				
K - D	2x4	DRY	No.2	SPF
D - I	2x4	DRY	No.2	SPF

DRY: SEASONED LUMBER.

PLATES (table is in inches)

JT	TYPE	PLATES	W	LEN	Y	X
A	TMVW-t	MT20	4.0	6.0	1.50	2.75
B	TMWW-t	MT20	4.0	4.0	2.00	1.25
C	TTW-m	MT20	4.0	4.0		
D	TMWW-t	MT20	4.0	4.0		
E	TTW-m	MT20	4.0	4.0		
F	TMWW-t	MT20	4.0	6.0		
G	TMV+p	MT20	2.0	4.0		
H	BMVW1-t	MT20	4.0	4.0	1.75	2.00
I	BMWWW-t	MT20	5.0	6.0		
J	BS-t	MT20	3.0	6.0		
K	BMWWW-t	MT20	5.0	6.0		
L	BMWW-t	MT20	4.0	4.0	1.75	1.50
M	BMV1+p	MT20	2.0	4.0		

NOTE: Lateral brace(s) shown shall be 1x4 for Part 9 design as per OBC 9.23.13.11, and no less than 2x4 for Part 4 design

REGISTERED PROFESSIONAL ENGINEER
02/16/2018
EDWIN C. FOK
PROVINCE OF ONTARIO

DIMENSIONS, SUPPORTS AND LOADINGS SPECIFIED BY FABRICATOR TO BE VERIFIED BY BUILDING DESIGNER

BEARINGS

JT	FACTORED GROSS REACTION VERT	HORZ	MAXIMUM FACTORED GROSS REACTION DOWN	HORZ	UPLIFT	INPUT BRG IN-SX	REQRD BRG IN-SX
M	1512	0	1512	0	0	5-8	2-4
H	1369	0	1369	0	0	HANGER BY OTHERS	
						MIN. SEAT SIZE: 1-8	

UNFACTORED REACTIONS

MAX./MIN. COMPONENT REACTIONS

JT	1ST LCASE COMBINED	SNOW	LIVE	PERM.LIVE	WIND	DEAD	SOIL
M	1081	643 / 0	0 / 0	0 / 0	0 / 0	437 / 0	0 / 0
H	979	579 / 0	0 / 0	0 / 0	0 / 0	401 / 0	0 / 0

BEARING MATERIAL TO BE SPF NO.2 OR BETTER AT JOINT(S) M

BRACING

FOR SECTION C-E, MAX. PURLIN SPACING = 2.00 FT.
FOR OTHER SECTIONS, TOP CHORD TO BE SHEATHED OR MAX. PURLIN SPACING = 5.17 FT.
MAX. UNBRACED BOTTOM CHORD LENGTH = 10.00 FT OR RIGID CEILING DIRECTLY APPLIED.

ALL PITCH BREAKS AND PERIMETER CORNER JOINTS MUST BE LATERALLY RESTRAINED.

1 LATERAL BRACE(S) AT 1/ 2 LENGTH OF D-K, D-I, F-H.

END VERTICAL(S) MUST BE SHEATHED OR HAVE BRACES AS INDICATED IN THE MAX. UNBRACED LENGTH COLUMN OF THE TABLE BELOW

LOADING

TOTAL LOAD CASES: (4)

CHORDS

MEMB. FR-TO	MAX. FACTORED FORCE (LBS)	FACTORED VERT. LOAD LC1 (PLF) FROM	TO	MAX CSI (LC)	MAX. UNBRAC LENGTH
A- B	-1423 / 0	-78.0	-78.0	0.30 (1)	5.17
B- C	-1250 / 0	-78.0	-78.0	0.28 (1)	5.44
C- D	-939 / 0	-85.5	-85.5	0.26 (1)	2.00
D- E	-835 / 0	-85.5	-85.5	0.25 (1)	2.00
E- F	-1107 / 0	-78.0	-78.0	0.16 (1)	5.85
F- G	0 / 22	-78.0	-78.0	0.19 (1)	10.00
M- A	-1320 / 0	0.0	0.0	0.14 (1)	7.04
H- G	-120 / 0	0.0	0.0	0.02 (1)	7.81
N- M	0 / 0	-96.5	-96.5	0.16 (1)	10.00
M- L	0 / 0	-18.5	-18.5	0.11 (4)	10.00
L- K	0 / 1116	-18.5	-18.5	0.34 (4)	10.00
K- J	0 / 1009	-18.5	-18.5	0.45 (4)	10.00
J- I	0 / 1009	-18.5	-18.5	0.45 (4)	10.00
I- H	0 / 754	-18.5	-18.5	0.42 (4)	10.00

WEBS

MEMB. FR-TO	MAX. FACTORED FORCE (LBS)	MAX CSI (LC)
L- B	-149 / 4	0.07 (1)
B- K	-266 / 0	0.29 (1)
K- C	0 / 478	0.11 (1)
K- D	-158 / 0	0.10 (1)
D- I	-396 / 0	0.24 (1)
I- E	0 / 420	0.09 (1)
I- F	0 / 142	0.04 (4)
A- L	0 / 1141	0.26 (1)
F- H	-1411 / 0	0.51 (1)

DESIGN CRITERIA

SPECIFIED LOADS:

TOP CH.	LL	=	21.0	PSF
	DL	=	6.0	PSF
BOT CH.	LL	=	0.0	PSF
	DL	=	7.4	PSF
TOTAL LOAD		=	34.4	PSF

SPACING = 24.0 IN. C/C

LOADING IN FLAT SECTION BASED ON PIGGYBACK TRUSS WITH SLOPES OF 6.00/12 AND -6.00/12 AND RESPECTIVE WALL HEIGHTS OF 0-0 AND 0-0 AND AN ADDITIONAL DEAD LOAD OF 3.0 P.S.F.

THIS TRUSS IS DESIGNED FOR RESIDENTIAL OR SMALL BUILDING REQUIREMENTS OF PART 9, NBCC 2010, NBCC 2015

THIS DESIGN COMPLIES WITH:
- PART 9 OF OBC 2012, OBC 2018
- CSA 086-09, CSA 086-14
- TPIC 2011, TPIC 2014

(55 % OF 23.0 P.S.F. G.S.L. PLUS 8.4 P.S.F. RAIN LOAD) EQUALS 21.0 P.S.F. SPECIFIED ROOF LIVE LOAD

ALLOWABLE DEFL.(LL)= L/360 (0.92")
CALCULATED VERT. DEFL.(LL) = L/ 999 (0.03")
ALLOWABLE DEFL.(TL)= L/360 (0.92")
CALCULATED VERT. DEFL.(TL) = L/ 999 (0.16")

CANTILEVER DEFLECTION:
ALLOWABLE DEFL.(LL)= L/120 (0.19")
CALCULATED VERT. DEFL.(LL) = L/ 999 (0.01")
ALLOWABLE DEFL.(TL)= L/120 (0.19")
CALCULATED VERT. DEFL.(TL) = L/ 999 (0.01")

CSI: TC=0.30/1.00 (A-B:1) , BC=0.45/1.00 (I-K:4) , WB=0.51/1.00 (F-H:1) , SSI=0.20/1.00 (C-D:1)

DOL LUMBER=1.00 NAIL=1.00 LS BEND=1.10 COMP=1.10 SHEAR=1.10 TENS= 1.10

COMPANION LIVE LOAD FACTOR = 1.00

TRUSS PLATE MANUFACTURER IS NOT RESPONSIBLE FOR QUALITY CONTROL IN THE TRUSS MANUFACTURING PLANT .

NAIL VALUES

PLATE	GRIP(DRY) (PSI) MAX	MIN	SHEAR (PLI) MAX	MIN	SECTION (PLI) MAX	MIN
MT20	618	354	1667	788	1987	1656

PLATE PLACEMENT TOL. = 0.250 inches

PLATE ROTATION TOL. = 5.0 Deg.

JSI GRIP= 0.88 (H) (INPUT = 0.90)
JSI METAL= 0.55 (J) (INPUT = 1.00)

A-18023281

JOB NAME	TRUSS NAME	QUANTITY	PLY	JOB DESC.	DRWG NO.
291811	H8P	14	1	TRUSS DESC.	

Alpa Roof Truss, Maple

Version 8.200 S Jan 6 2018 MiTek Industries, Inc. Fri Feb 16 13:00:17 2018 Page 1
ID:84gOFYESM8s1JmDO6_uSGRyQWjP-c9tlrTZDJGSe8joFmyp8gJyhpchtiRj0DDWHbozkZrC

Scale = 1:25.4

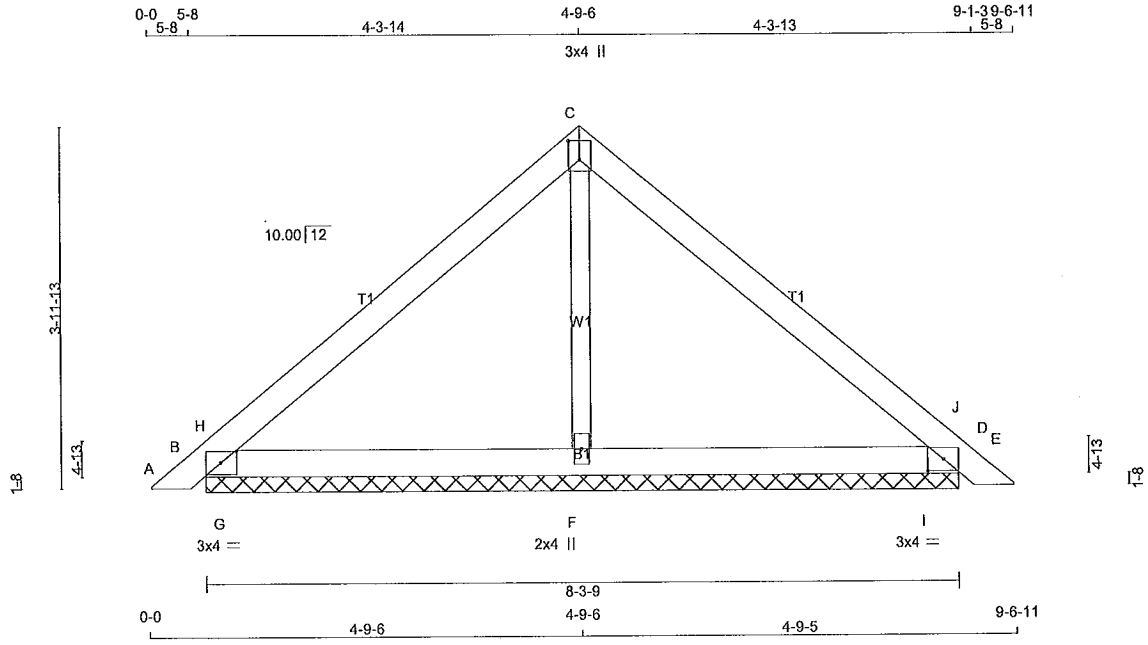

TOTAL WEIGHT = 14 X 26 = 367 lb

LUMBER
N. L. G. A. RULES

CHORDS	SIZE		LUMBER	DESCR.
A - C	2x4	DRY	No.2	SPF
C - E	2x4	DRY	No.2	SPF
B - D	2x4	DRY	No.2	SPF
ALL WEBS	2x3	DRY	No.2	SPF

DRY: SEASONED LUMBER.

PLATES (table is in inches)

JT	TYPE	PLATES	W	LEN	Y	X
B	TMB1-I	MT20	3.0	4.0	1.50	2.00
C	TTW+p	MT20	3.0	4.0	2.50	1.50
D	TMB1-I	MT20	3 0	4.0	1.50	2.00
F	BMW1+w	MT20	2.0	4.0		

NOTE: Lateral brace(s) shown shall be 1x4 for Part 9 design as per OBC 9.23.13.11, and no less than 2x4 for Part 4 design

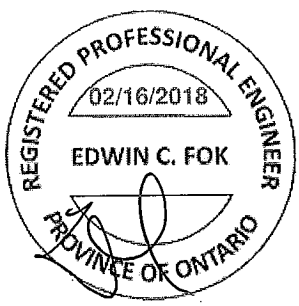

DIMENSIONS, SUPPORTS AND LOADINGS SPECIFIED BY FABRICATOR TO BE VERIFIED BY BUILDING DESIGNER

BEARINGS

JT	FACTORED GROSS REACTION VERT	HORZ	MAXIMUM FACTORED GROSS REACTION DOWN	HORZ	UPLIFT	INPUT BRG IN-SX	REQRD BRG IN-SX
B	313	0	313	0	0	8-3-9	9-10
D	313	0	313	0	0	8-3-9	9-10
F	256	0	256	0	0	8-3-9	9-10

UNFACTORED REACTIONS

JT	1ST LCASE COMBINED	MAX./MIN. COMPONENT REACTIONS SNOW	LIVE	PERM.LIVE	WIND	DEAD	SOIL
B	221	148 / 0	0 / 0	0 / 0	0 / 0	72 / 0	0 / 0
D	221	148 / 0	0 / 0	0 / 0	0 / 0	72 / 0	0 / 0
F	186	95 / 0	0 / 0	0 / 0	0 / 0	90 / 0	0 / 0

BEARING MATERIAL TO BE SPF NO.2 OR BETTER AT JOINT(S) B, D, F

BRACING
TOP CHORD TO BE SHEATHED OR MAX. PURLIN SPACING = 6.25 FT.
MAX. UNBRACED BOTTOM CHORD LENGTH = 10.00 FT OR RIGID CEILING DIRECTLY APPLIED.

ALL PITCH BREAKS AND PERIMETER CORNER JOINTS MUST BE LATERALLY RESTRAINED.

LOADING
TOTAL LOAD CASES: (4)

CHORDS

MEMB. FR-TO	MAX. FACTORED FORCE (LBS)	FACTORED VERT. LOAD LC1 (PLF) FROM	TO	MAX CSI (LC)	MAX. UNBRAC LENGTH
A- B	0 / 12	-78.0	-78.0	0.02 (1)	10.00
B- H	-30 / 39	-78.0	-78.0	0.10 (1)	6.25
H- C	-155 / 0	-78.0	-78.0	0.16 (1)	6.25
C- J	-155 / 0	-78.0	-78.0	0.16 (1)	6.25
J- D	-30 / 39	-78.0	-78.0	0.10 (1)	6.25
D- E	0 / 12	-78.0	-78.0	0.02 (1)	10.00
B- G	0 / 111	-18.5	-18.5	0.16 (1)	10.00
G- F	0 / 111	-18.5	-18.5	0.16 (1)	10.00
F- I	0 / 111	-18.5	-18.5	0.16 (1)	10.00
I- D	0 / 111	-18.5	-18.5	0.16 (1)	10.00

WEBS

MEMB. FR-TO	MAX. FACTORED FORCE (LBS)	MAX CSI (LC)
F- C	-85 / 0	0.02 (1)
G- H	-425 / 0	0.00 (1)
I- J	-425 / 0	0.00 (1)

[M]

DESIGN CRITERIA

SPECIFIED LOADS:

TOP CH.	LL	=	21.0	PSF
	DL	=	6.0	PSF
BOT CH.	LL	=	0.0	PSF
	DL	=	7.4	PSF
TOTAL LOAD		=	34.4	PSF

SPACING = 24.0 IN. C/C

THIS TRUSS IS DESIGNED FOR RESIDENTIAL OR SMALL BUILDING REQUIREMENTS OF PART 9, NBCC 2010, NBCC 2015

THIS DESIGN COMPLIES WITH:
- PART 9 OF OBC 2012, OBC 2018
- CSA 086-09, CSA 086-14
- TPIC 2011, TPIC 2014

(55 % OF 23.0 P.S.F. G.S.L. PLUS 8.4 P.S.F. RAIN LOAD) EQUALS 21.0 P.S.F. SPECIFIED ROOF LIVE LOAD

CSI: TC=0.16/1.00 (C-H:1) , BC=0.16/1.00 (B-G:1) , WB=0.02/1.00 (C-F:1) , SSI=0.32/1.00 (B-G:1)

DOL LUMBER=1.00 NAIL=1.00 LS BEND=1.10 COMP=1.10 SHEAR=1.10 TENS= 1.10

COMPANION LIVE LOAD FACTOR = 1.00

TRUSS PLATE MANUFACTURER IS NOT RESPONSIBLE FOR QUALITY CONTROL IN THE TRUSS MANUFACTURING PLANT .

NAIL VALUES

PLATE	GRIP(DRY) (PSI) MAX	MIN	SHEAR (PLI) MAX	MIN	SECTION (PLI) MAX	MIN
MT20	618	354	1667	788	1987	1656

PLATE PLACEMENT TOL. = 0.250 inches

PLATE ROTATION TOL. = 5.0 Deg.

JSI GRIP= 0.27 (B) (INPUT = 0.90)
JSI METAL= 0.07 (D) (INPUT = 1.00)

A-18023282

JOB NAME	TRUSS NAME	QUANTITY	PLY	JOB DESC.	DRWG NO.
291811	H9A	1	2	TRUSS DESC.	

Alpa Roof Truss, Maple

Version 8.200 S Jan 6 2018 MiTek Industries, Inc. Fri Feb 16 12:26:49 2018 Page 1

ID:84gOFYESM8s1JmDO6_uSGRyQWjP-PrYePtFgBJTZE7HK8FoFHtnYOAIKEBaSUp507BzkaKa

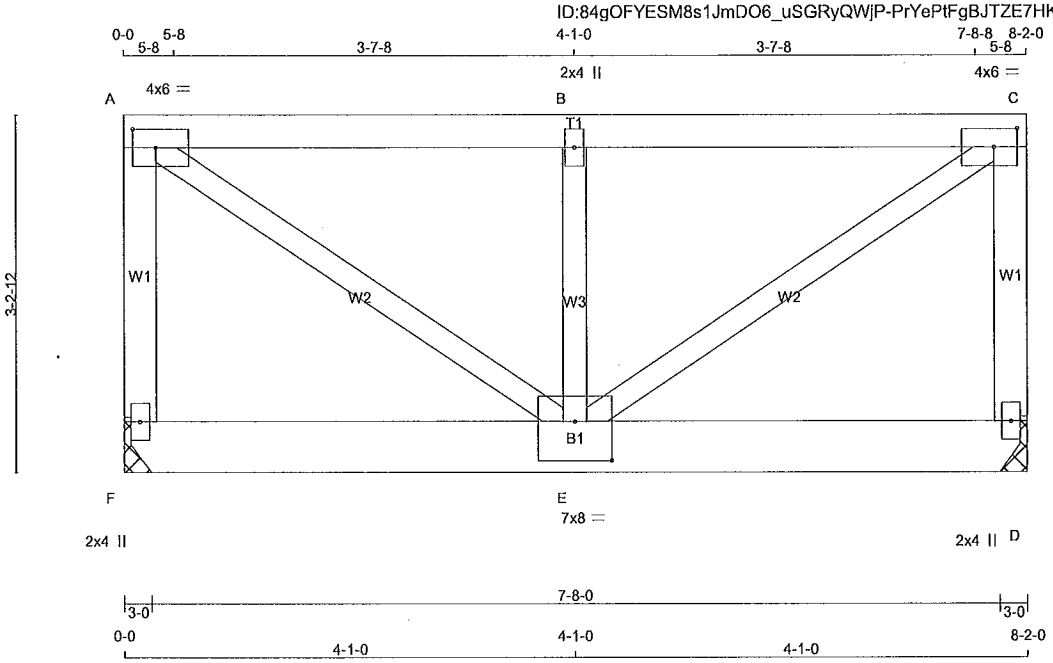

Scale = 1:20.8

TOTAL WEIGHT = 2 X 39 = 78 lb

[M]

LUMBER

N. L. G. A. RULES

CHORDS	SIZE		LUMBER	DESCR.
F - A	2x4	DRY	No.2	SPF
A - C	2x4	DRY	No.2	SPF
D - C	2x4	DRY	No.2	SPF
F - D	2x6	DRY	No.2	SPF
ALL WEBS	2x3	DRY	No.2	SPF

DRY: SEASONED LUMBER.

DESIGN CONSISTS OF 2 TRUSSES BUILT SEPARATELY THEN FASTENED TOGETHER AS FOLLOWS:

CHORDS	#ROWS	SURFACE SPACING (IN)	LOAD(PLF)
TOP CHORDS : (0.122"X3") SPIRAL NAILS			
F- A	1	12	TOP
A- C	1	12	SIDE(16.3)
C- D	1	12	TOP
BOTTOM CHORDS : (0.122"X3") SPIRAL NAILS			
F- D	2	8	SIDE(322.3)
WEBS : (0.122"X3") SPIRAL NAILS			
2x3	1	6	

NAILS TO BE DRIVEN FROM ONE SIDE ONLY.

TOP - COMPONENTS ARE LOADED FROM THE TOP AND MUST BE PLACED ON TOP EDGE OF ALL PLIES FOR THE LOAD TO BE TRANSFERRED TO EACH PLY.

SIDE - PLF SHOWN IS THE EQUIVALENT UDL APPLIED TO ONE SIDE THAT THE CORRESPONDING NAILING PATTERN SHALL BE CAPABLE OF TRANSFERING. REMAINING PLF MUST BE APPLIED ON THE OPPOSITE SIDE OR ON THE TOP.

PLATES (table is in inches)

JT	TYPE	PLATES	W	LEN	Y	X
A	TMVW-t	MT20	4.0	6.0	2.00	2.50
B	TMW+w	MT20	2.0	4.0		
C	TMVW-t	MT20	4.0	6.0	2.00	2.50
D	BMV1+p	MT20	2.0	4.0		
E	BMWWW-t	MT20	7.0	8.0	4.25	4.00
F	BMV1+p	MT20	2.0	4.0		

NOTE: Lateral brace(s) shown shall be 1x4 for Part 9 design as per OBC 9.23.13.11, and no less than 2x4 for Part 4 design

REGISTERED PROFESSIONAL ENGINEER
02/16/2018
EDWIN C. FOK
PROVINCE OF ONTARIO

DIMENSIONS, SUPPORTS AND LOADINGS SPECIFIED BY FABRICATOR TO BE VERIFIED BY BUILDING DESIGNER

BEARINGS

JT	FACTORED GROSS REACTION VERT	HORZ	MAXIMUM FACTORED GROSS REACTION DOWN	HORZ	UPLIFT	INPUT BRG	REQRD BRG
F	3160	0	3160	0	0	IN-SX	IN-SX
						HANGER BY OTHERS	
						MIN. SEAT SIZE: 1-11	
D	3160	0	3160	0	0	HANGER BY OTHERS	
						MIN. SEAT SIZE: 1-11	

UNFACTORED REACTIONS

1ST LCASE MAX./MIN. COMPONENT REACTIONS

JT	COMBINED	SNOW	LIVE	PERM.LIVE	WIND	DEAD	SOIL
F	2253	1375 / 0	0 / 0	0 / 0	0 / 0	878 / 0	0 / 0
D	2253	1375 / 0	0 / 0	0 / 0	0 / 0	878 / 0	0 / 0

BRACING

TOP CHORD TO BE SHEATHED OR MAX. PURLIN SPACING = 5.41 FT.
MAX. UNBRACED BOTTOM CHORD LENGTH = 10.00 FT OR RIGID CEILING DIRECTLY APPLIED.

ALL PITCH BREAKS AND PERIMETER CORNER JOINTS MUST BE LATERALLY RESTRAINED.

LOADING

TOTAL LOAD CASES: (4)

CHORDS

MEMB. FR-TO	MAX. FACTORED FORCE (LBS)	FACTORED VERT. LOAD (PLF) FROM	TO	LC1	MAX CSI (LC)	MAX. UNBRAC LENGTH
F- A	-2069 / 0	0.0	0.0	0.17 (1)		7.69
A- B	-2694 / 0	-110.7	-110.7	0.15 (1)		5.41
B- C	-2694 / 0	-110.7	-110.7	0.15 (1)		5.41
D- C	-2069 / 0	0.0	0.0	0.17 (1)		7.69
F- E	0 / 0	-663.1	-663.1	0.40 (1)		10.00
E- D	0 / 0	-663.1	-663.1	0.40 (1)		10.00

WEBS

MEMB. FR-TO	MAX. FACTORED FORCE (LBS)	MAX CSI (LC)
A- E	0 / 3286	0.41 (1)
E- B	-529 / 0	0.05 (1)
E- C	0 / 3286	0.41 (1)

DESIGN CRITERIA

SPECIFIED LOADS:

TOP CH.	LL	=	21.0	PSF
	DL	=	6.0	PSF
BOT CH.	LL	=	0.0	PSF
	DL	=	7.4	PSF
TOTAL LOAD		=	34.4	PSF

SPACING = 24.0 IN. C/C

LOADING IN FLAT SECTION BASED ON A SLOPE OF 2.00/12 MINIMUM

GIRDER TYPE: CPrimeHlp
SIDE SETBACK = 0-0
END SETBACK = 3-8-2
END WALL WIDTH = 0-0
CORNER FRAMING TYPE: CONVENTIONAL
END JACK TYPE: CONVENTIONAL
APPLIED TO FRONT SIDE
- ADDT'L LOADS BASED ON 55 % OF GSL.

GIRDER TYPE: CStdGirder
START DISTANCE = 0-0
START SPAN CARRIED = 28-4-14
END DISTANCE = 8-2-0
END SPAN CARRIED = 28-4-14
END WALL WIDTH = 0-0
APPLIED TO FRONT SIDE OF BOTTOM CHORD.
- ADDT'L LOADS BASED ON 55 % OF GSL.

THIS TRUSS IS DESIGNED FOR RESIDENTIAL OR SMALL BUILDING REQUIREMENTS OF PART 9, NBCC 2010, NBCC 2015

THIS DESIGN COMPLIES WITH:
- PART 9 OF OBC 2012, OBC 2018
- CSA 086-09, CSA 086-14
- TPIC 2011, TPIC 2014

(55 % OF 23.0 P.S.F. G.S.L. PLUS 8.4 P.S.F. RAIN LOAD) EQUALS 21.0 P.S.F. SPECIFIED ROOF LIVE LOAD

ALLOWABLE DEFL.(LL)= L/360 (0.27")
CALCULATED VERT. DEFL.(LL) = L/ 999 (0.03")
ALLOWABLE DEFL.(TL)= L/360 (0.27")
CALCULATED VERT. DEFL.(TL) = L/ 999 (0.06")

CSI: TC=0.17/1.00 (A-F:1) , BC=0.40/1.00 (E-F:1) , WB=0.41/1.00 (A-E:1) , SSI=0.54/1.00 (E-F:1)

DOL LUMBER=1.00 NAIL=1.00 LS BEND=1.00 COMP=1.00 SHEAR=1.00 TENS= 1.00

COMPANION LIVE LOAD FACTOR = 1.00

TRUSS PLATE MANUFACTURER IS NOT RESPONSIBLE FOR QUALITY CONTROL IN THE TRUSS MANUFACTURING PLANT .

NAIL VALUES

PLATE	GRIP(DRY) (PSI) MAX	MIN	SHEAR (PLI) MAX	MIN	SECTION (PLI) MAX	MIN
MT20	618	354	1667	788	1987	1656

A-18023283

CONTINUED ON PAGE 2

JOB NAME	TRUSS NAME	QUANTITY	PLY	JOB DESC.	DRWG NO.
291811	H10A	1	2	TRUSS DESC.	

Alpa Roof Truss, Maple

Version 8.200 S Jan 6 2018 MiTek Industries, Inc. Fri Feb 16 13:02:06 2018 Page 1

ID:84gOFYESM8s1JmDO6_uSGRyQWjP-w7yyjltbemBBjTdCfLGiblz9wYhdleY2HgQYw_zkZpV

Scale = 1:56.2

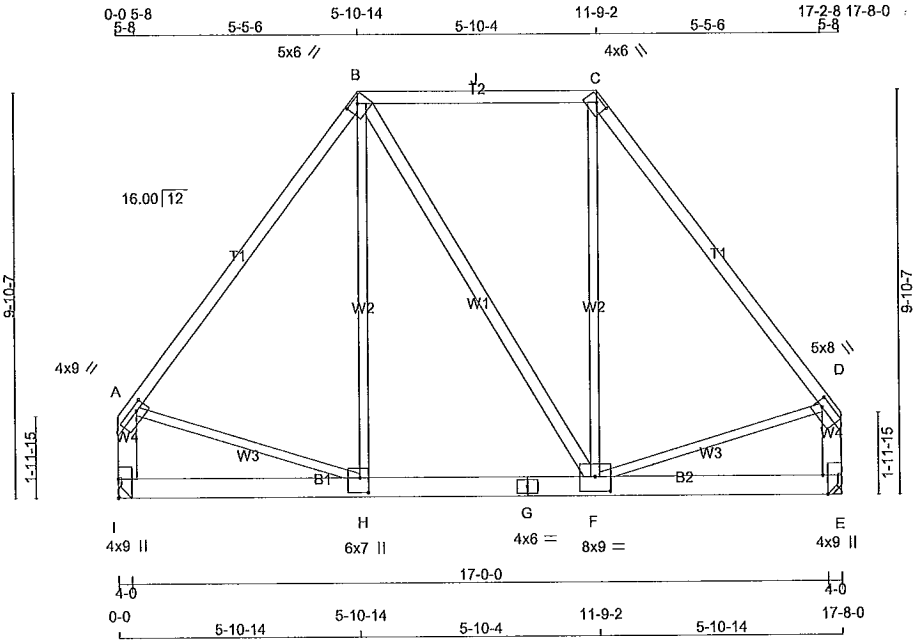

TOTAL WEIGHT = 2 X 104 = 208 lb

LUMBER

N. L. G. A. RULES

CHORDS	SIZE		LUMBER	DESCR.
A - B	2x4	DRY	No.2	SPF
B - C	2x4	DRY	No.2	SPF
C - D	2x4	DRY	No.2	SPF
I - A	2x6	DRY	No.2	SPF
E - D	2x6	DRY	No.2	SPF
I - G	2x6	DRY	No.2	SPF
G - E	2x6	DRY	No.2	SPF
ALL WEBS EXCEPT	2x3	DRY	No.2	SPF
B - F	2x4	DRY	No.2	SPF

DRY: SEASONED LUMBER.

DESIGN CONSISTS OF 2 TRUSSES BUILT SEPARATELY THEN FASTENED TOGETHER AS FOLLOWS:

CHORDS	#ROWS	SURFACE SPACING (IN)	LOAD(PLF)
TOP CHORDS : (0.122"X3") SPIRAL NAILS			
A- B	1	12	TOP
B- C	1	12	TOP
C- D	1	12	TOP
I- A	2	12	TOP
E- D	2	12	TOP
BOTTOM CHORDS : (0.122"X3") SPIRAL NAILS			
I- G	2	8	SIDE(308.4)
G- E	2	8	SIDE(308.4)
WEBS : (0.122"X3") SPIRAL NAILS			
2x3	1	6	
2x4	1	6	

NAILS TO BE DRIVEN FROM ONE SIDE ONLY.

TOP - COMPONENTS ARE LOADED FROM THE TOP AND MUST BE PLACED ON TOP EDGE OF ALL PLIES FOR THE LOAD TO BE TRANSFERRED TO EACH PLY.

SIDE - PLF SHOWN IS THE EQUIVALENT UDL APPLIED TO ONE SIDE THAT THE CORRESPONDING NAILING PATTERN SHALL BE CAPABLE OF TRANSFERING. REMAINING PLF MUST BE APPLIED ON THE OPPOSITE SIDE OR ON THE TOP.

NOTE: Lateral brace(s) shown shall be 1x4 for Part 9 design as per OBC 9.23.13.11, and no less than 2x4 for Part 4 design

REGISTERED PROFESSIONAL ENGINEER
02/16/2018
EDWIN C. FOK
PROVINCE OF ONTARIO

DIMENSIONS, SUPPORTS AND LOADINGS SPECIFIED BY FABRICATOR TO BE VERIFIED BY BUILDING DESIGNER

BEARINGS

JT	FACTORED GROSS REACTION VERT	HORZ	MAXIMUM FACTORED GROSS REACTION DOWN	HORZ	UPLIFT	INPUT BRG IN-SX	REQRD BRG IN-SX
I	6322	0	6322	0	0	HANGER BY OTHERS MIN. SEAT SIZE: 4-0	
E	6322	0	6322	0	0	HANGER BY OTHERS MIN. SEAT SIZE: 4-0	

UNFACTORED REACTIONS

JT	1ST LCASE COMBINED	MAX./MIN. COMPONENT REACTIONS SNOW	LIVE	PERM.LIVE	WIND	DEAD	SOIL
I	4509	2742 / 0	0 / 0	0 / 0	0 / 0	1768 / 0	0 / 0
E	4509	2742 / 0	0 / 0	0 / 0	0 / 0	1768 / 0	0 / 0

BRACING

FOR SECTION B-C, MAX. PURLIN SPACING = 2.00 FT.
FOR OTHER SECTIONS, TOP CHORD TO BE SHEATHED OR MAX. PURLIN SPACING = 4.06 FT.
MAX. UNBRACED BOTTOM CHORD LENGTH = 10.00 FT OR RIGID CEILING DIRECTLY APPLIED.

ALL PITCH BREAKS AND PERIMETER CORNER JOINTS MUST BE LATERALLY RESTRAINED.

LOADING

TOTAL LOAD CASES: (4)

CHORDS

MEMB. FR-TO	MAX. FACTORED FORCE (LBS)	FACTORED VERT. LOAD (PLF) FROM	TO	LC1 MAX CSI (LC)	MAX. UNBRAC LENGTH
A- B	-4737 / 0	-78.0	-78.0	0.82 (1)	4.06
B- J	-2882 / 0	-85.5	-85.5	0.34 (1)	2.00
J- C	-2882 / 0	-85.5	-85.5	0.34 (1)	2.00
C- D	-4761 / 0	-78.0	-78.0	0.83 (1)	4.06
I- A	-4746 / 0	0.0	0.0	0.19 (1)	6.64
E- D	-4768 / 0	0.0	0.0	0.19 (1)	6.63
I- H	0 / 0	-635.2	-635.2	0.74 (1)	10.00
H- G	0 / 2868	-635.2	-635.2	0.97 (1)	10.00
G- F	0 / 2868	-635.2	-635.2	0.97 (1)	10.00
F- E	0 / 0	-635.2	-635.2	0.79 (1)	10.00

WEBS

MEMB. FR-TO	MAX. FACTORED FORCE (LBS)	MAX CSI (LC)
H- B	0 / 3294	0.41 (1)
F- C	0 / 3337	0.41 (1)
A- H	0 / 2921	0.36 (1)
F- D	0 / 2935	0.36 (1)

DESIGN CRITERIA

SPECIFIED LOADS:

TOP CH.	LL	=	21.0	PSF
	DL	=	6.0	PSF
BOT CH.	LL	=	0.0	PSF
	DL	=	7.4	PSF
TOTAL LOAD		=	34.4	PSF

SPACING = 24.0 IN. C/C

LOADING IN FLAT SECTION BASED ON PIGGYBACK TRUSS WITH SLOPES OF 6.00/12 AND -6.00/12 AND RESPECTIVE WALL HEIGHTS OF 0-0 AND 0-0 AND AN ADDITIONAL DEAD LOAD OF 3.0 P.S.F.

GIRDER TYPE: CStdGirder
START DISTANCE = 0-0
START SPAN CARRIED = 27-6-14
END DISTANCE = 17-8-0
END SPAN CARRIED = 27-6-14
END WALL WIDTH = 0-0
APPLIED TO FRONT SIDE OF BOTTOM CHORD.
- ADDT'L LOADS BASED ON 55 % OF GSL.

THIS TRUSS IS DESIGNED FOR RESIDENTIAL OR SMALL BUILDING REQUIREMENTS OF PART 9, NBCC 2010, NBCC 2015

THIS DESIGN COMPLIES WITH:
- PART 9 OF OBC 2012, OBC 2018
- CSA 086-09, CSA 086-14
- TPIC 2011, TPIC 2014

(55 % OF 23.0 P.S.F. G.S.L. PLUS 8.4 P.S.F. RAIN LOAD) EQUALS 21.0 P.S.F. SPECIFIED ROOF LIVE LOAD

ALLOWABLE DEFL.(LL)= L/360 (0.59")
CALCULATED VERT. DEFL.(LL) = L/ 999 (0.10")
ALLOWABLE DEFL.(TL)= L/360 (0.59")
CALCULATED VERT. DEFL.(TL) = L/ 999 (0.21")

CSI: TC=0.83/1.00 (C-D:1) , BC=0.97/1.00 (F-H:1) , WB=0.41/1.00 (C-F:1) , SSI=0.75/1.00 (E-F:1)

DOL LUMBER=1.00 NAIL=1.00 LS BEND=1.00 COMP=1.00 SHEAR=1.00 TENS= 1.00

COMPANION LIVE LOAD FACTOR = 1.00

AUTOSOLVE HEELS OFF

TRUSS PLATE MANUFACTURER IS NOT RESPONSIBLE FOR QUALITY CONTROL IN THE TRUSS MANUFACTURING PLANT .

NAIL VALUES

PLATE	GRIP(DRY) (PSI) MAX	MIN	SHEAR (PLI) MAX	MIN	SECTION (PLI) MAX	MIN
MT20	618	354	1667	788	1987	1656

PLATE PLACEMENT TOL. = 0.250 inches

PLATE ROTATION TOL. = 5.0 Deg.

A-18023284

CONTINUED ON PAGE 2

JOB NAME	TRUSS NAME	QUANTITY	PLY	JOB DESC.	DRWG NO.
291811	H10A	1	2	TRUSS DESC.	

PLATES (table is in inches)

JT	TYPE	PLATES	W	LEN	Y	X
A	TMVW-t	MT20	4.0	9.0	1.50	3.00
B	TTWW-h	MT20	5.0	6.0	1.50	3.00
C	TTW-h	MT20	4.0	6.0	1.25	3.00
D	TMVW-t	MT20	5.0	8.0	2.25	2.00
E	BMV1+t	MT20	4.0	9.0	Edge	1.50
F	BMWWW-t	MT20	8.0	9.0	4.25	4.50
G	BS-t	MT20	4.0	6.0		
H	BMWW+t	MT20	6.0	7.0	4.25	2.50
I	BMV1+t	MT20	4.0	9.0	5.50	

Edge - INDICATES REFERENCE CORNER OF PLATE TOUCHES EDGE OF CHORD.

JSI GRIP= 0.90 (A) (INPUT = 0.90)
JSI METAL= 0.61 (C) (INPUT = 1.00)

NOTE: Lateral brace(s) shown shall be 1x4 for Part 9 design as per OBC 9.23.13.11, and no less than 2x4 for Part 4 design

REGISTERED PROFESSIONAL ENGINEER
02/16/2018
EDWIN C. FOK
PROVINCE OF ONTARIO

A-18023284(2)

JOB NAME	TRUSS NAME	QUANTITY	PLY	JOB DESC.	DRWG NO.
291811	H10T	2	1	TRUSS DESC.	

Alpa Roof Truss, Maple

Version 8.200 S Jan 6 2018 MiTek Industries, Inc. Fri Feb 16 13:00:45 2018 Page 1
ID:84gOFYESM8s1JmDO6_uSGRyQWjP-oYZLj2unjt_gV0xePrJipD6PNuFFG1e7fZImaAzkZqm

Scale = 1:56.4

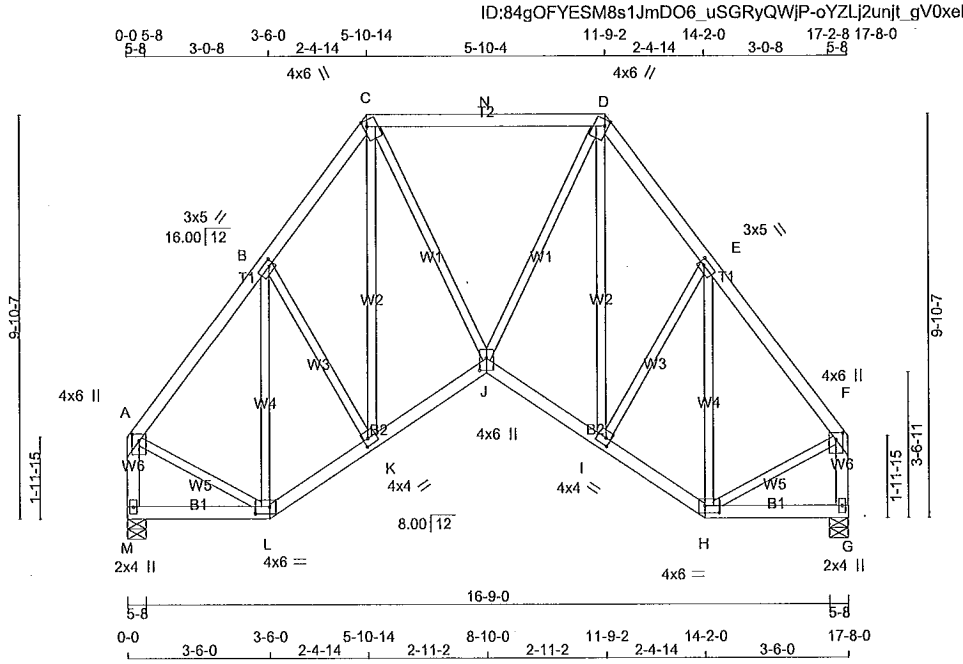

TOTAL WEIGHT = 2 X 103 = 205 lb

[M][F]

LUMBER
N. L. G. A. RULES

CHORDS	SIZE		LUMBER	DESCR.
A - C	2x4	DRY	No.2	SPF
C - D	2x4	DRY	No.2	SPF
D - F	2x4	DRY	No.2	SPF
M - A	2x4	DRY	No.2	SPF
G - F	2x4	DRY	No.2	SPF
M - L	2x4	DRY	No.2	SPF
L - J	2x4	DRY	No.2	SPF
J - H	2x4	DRY	No.2	SPF
H - G	2x4	DRY	No.2	SPF
ALL WEBS EXCEPT	2x3	DRY	No.2	SPF

DRY: SEASONED LUMBER.

PLATES (table is in inches)

JT	TYPE	PLATES	W	LEN	Y	X
A	TMVW+p	MT20	4.0	6.0	2.00	2.00
B	TMWW-t	MT20	3.0	5.0	1.50	1.50
C	TTWW+m	MT20	4.0	6.0	1.75	1.00
D	TTWW+m	MT20	4.0	6.0	1.75	1.00
E	TMWW-t	MT20	3.0	5.0	1.50	1.50
F	TMVW+p	MT20	4.0	6.0	2.00	2.00
G	BMV1+p	MT20	2.0	4.0		
H	BBWW-l	MT20	4.0	6.0	2.00	4.25
I	BMWW-t	MT20	4.0	4.0	2.00	1.50
J	BBWW+p	MT20	4.0	6.0	3.50	2.00
K	BMWW-t	MT20	4.0	4.0	2.00	1.50
L	BBWW-l	MT20	4.0	6.0	2.00	4.25
M	BMV1+p	MT20	2.0	4.0		

NOTE: Lateral brace(s) shown shall be 1x4 for Part 9 design as per OBC 9.23.13.11, and no less than 2x4 for Part 4 design

REGISTERED PROFESSIONAL ENGINEER
02/16/2018
EDWIN C. FOK
PROVINCE OF ONTARIO

DIMENSIONS, SUPPORTS AND LOADINGS SPECIFIED BY FABRICATOR TO BE VERIFIED BY BUILDING DESIGNER

BEARINGS

JT	FACTORED GROSS REACTION VERT	HORZ	MAXIMUM FACTORED GROSS REACTION DOWN	HORZ	UPLIFT	INPUT BRG IN-SX	REQRD BRG IN-SX
M	874	0	874	0	0	5-8	1-8
G	874	0	874	0	0	5-8	1-8

UNFACTORED REACTIONS

JT	1ST LCASE COMBINED	MAX./MIN. COMPONENT REACTIONS SNOW	LIVE	PERM.LIVE	WIND	DEAD	SOIL
M	625	371 / 0	0 / 0	0 / 0	0 / 0	254 / 0	0 / 0
G	625	371 / 0	0 / 0	0 / 0	0 / 0	254 / 0	0 / 0

BEARING MATERIAL TO BE SPF NO.2 OR BETTER AT JOINT(S) M, G

BRACING
FOR SECTION C-D, MAX. PURLIN SPACING = 2.00 FT.
FOR OTHER SECTIONS, TOP CHORD TO BE SHEATHED OR MAX. PURLIN SPACING = 6.25 FT.
MAX. UNBRACED BOTTOM CHORD LENGTH = 10.00 FT OR RIGID CEILING DIRECTLY APPLIED.

ALL PITCH BREAKS AND PERIMETER CORNER JOINTS MUST BE LATERALLY RESTRAINED.

LOADING
TOTAL LOAD CASES: (4)

CHORDS

MEMB. FR-TO	MAX. FACTORED FORCE (LBS)	FACTORED VERT. LOAD (PLF) FROM	TO	LC1 CSI (LC)	MAX UNBRAC LENGTH
A- B	-665 / 0	-78.0	-78.0	0.11 (1)	6.25
B- C	-773 / 0	-78.0	-78.0	0.10 (1)	6.25
C- N	-599 / 0	-85.5	-85.5	0.50 (1)	2.00
N- D	-599 / 0	-85.5	-85.5	0.50 (1)	2.00
D- E	-773 / 0	-78.0	-78.0	0.10 (1)	6.25
E- F	-665 / 0	-78.0	-78.0	0.11 (1)	6.25
M- A	-842 / 0	0.0	0.0	0.10 (1)	7.81
G- F	-842 / 0	0.0	0.0	0.10 (1)	7.81
M- L	0 / 0	-18.5	-18.5	0.07 (4)	10.00
L- K	0 / 489	-18.5	-18.5	0.10 (1)	10.00
K- J	0 / 530	-18.5	-18.5	0.10 (1)	10.00
J- I	0 / 530	-18.5	-18.5	0.10 (1)	10.00
I- H	0 / 489	-18.5	-18.5	0.10 (1)	10.00
H- G	0 / 0	-18.5	-18.5	0.07 (4)	10.00

WEBS

MEMB. FR-TO	MAX. FACTORED FORCE (LBS)	MAX CSI (LC)
L- B	-408 / 0	0.28 (1)
B- K	0 / 77	0.02 (1)
K- C	-31 / 16	0.04 (1)
C- J	0 / 353	0.08 (1)
J- D	0 / 353	0.08 (1)
I- D	-31 / 16	0.04 (1)
I- E	0 / 77	0.02 (1)
H- E	-408 / 0	0.28 (1)
A- L	0 / 451	0.10 (1)
H- F	0 / 451	0.10 (1)

DESIGN CRITERIA

SPECIFIED LOADS:

TOP CH.	LL	=	21.0	PSF
	DL	=	6.0	PSF
BOT CH.	LL	=	0.0	PSF
	DL	=	7.4	PSF
TOTAL LOAD		=	34.4	PSF

SPACING = 24.0 IN. C/C

LOADING IN FLAT SECTION BASED ON PIGGYBACK TRUSS WITH SLOPES OF 6.00/12 AND -6.00/12 AND RESPECTIVE WALL HEIGHTS OF 0-0 AND 0-0 AND AN ADDITIONAL DEAD LOAD OF 3.0 P.S.F.

THIS TRUSS IS DESIGNED FOR RESIDENTIAL OR SMALL BUILDING REQUIREMENTS OF PART 9, NBCC 2010, NBCC 2015

THIS DESIGN COMPLIES WITH:
- PART 9 OF OBC 2012, OBC 2018
- CSA 086-09, CSA 086-14
- TPIC 2011, TPIC 2014

(55 % OF 23.0 P.S.F. G.S.L. PLUS 8.4 P.S.F. RAIN LOAD) EQUALS 21.0 P.S.F. SPECIFIED ROOF LIVE LOAD

ALLOWABLE DEFL.(LL)= L/360 (0.59")
CALCULATED VERT. DEFL.(LL) = L/ 999 (0.02")
ALLOWABLE DEFL.(TL)= L/360 (0.59")
CALCULATED VERT. DEFL.(TL) = L/ 999 (0.03")

CSI: TC=0.50/1.00 (C-D:1) , BC=0.10/1.00 (I-J:1) , WB=0.28/1.00 (E-H:1) , SSI=0.20/1.00 (C-D:1)

DOL LUMBER=1.00 NAIL=1.00 LS BEND=1.10 COMP=1.10 SHEAR=1.10 TENS= 1.10

COMPANION LIVE LOAD FACTOR = 1.00

TRUSS PLATE MANUFACTURER IS NOT RESPONSIBLE FOR QUALITY CONTROL IN THE TRUSS MANUFACTURING PLANT .

NAIL VALUES

PLATE	GRIP(DRY) (PSI) MAX	MIN	SHEAR (PLI) MAX	MIN	SECTION (PLI) MAX	MIN
MT20	618	354	1667	788	1987	1656

PLATE PLACEMENT TOL. = 0.250 Inches

PLATE ROTATION TOL. = 5.0 Deg.

JSI GRIP= 0.88 (C) (INPUT = 0.90)
JSI METAL= 0.24 (A) (INPUT = 1.00)

A-18023285

JOB NAME	TRUSS NAME	QUANTITY	PLY	JOB DESC.	DRWG NO.
291811	H11P	4	1	TRUSS DESC.	

Alpa Roof Truss, Maple

Version 8.200 S Jan 6 2018 MiTek Industries, Inc. Fri Feb 16 13:02:25 2018 Page 1

ID:84gOFYESM8s1JmDO6_uSGRyQWjP-snc8lF6W9baUVOasGr69sJFamCPiiKQrf7W35NzkZpC

Scale = 1:26.2

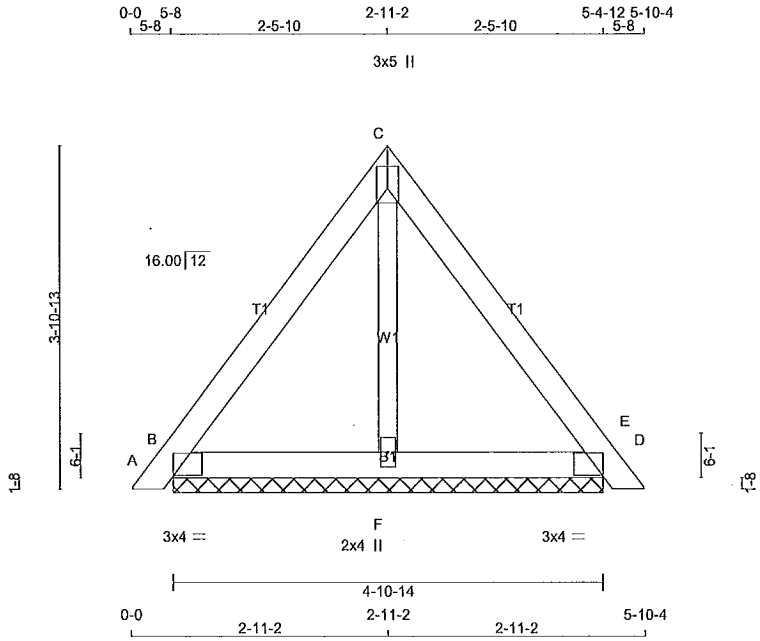

TOTAL WEIGHT = 4 X 19 = 77 lb

LUMBER

N. L. G. A. RULES

CHORDS	SIZE		LUMBER	DESCR.
A - C	2x4	DRY	No.2	SPF
C - E	2x4	DRY	No.2	SPF
B - D	2x4	DRY	No.2	SPF
ALL WEBS	2x3	DRY	No.2	SPF

DRY: SEASONED LUMBER.

PLATES (table is in inches)

JT	TYPE	PLATES	W	LEN	Y	X
B	TMB1-I	MT20	3.0	4.0	1.50	2.75
C	TTW+p	MT20	3.0	5.0	2.00	Edge
D	TMB1-I	MT20	3.0	4.0	1.50	2.75
F	BMW1+w	MT20	2.0	4.0		

Edge - INDICATES REFERENCE CORNER OF PLATE TOUCHES EDGE OF CHORD.

NOTE: Lateral brace(s) shown shall be 1x4 for Part 9 design as per OBC 9.23.13.11, and no less than 2x4 for Part 4 design

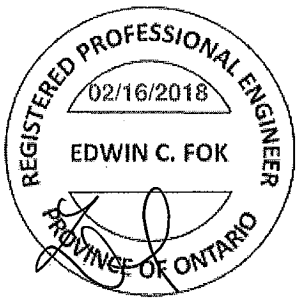

DIMENSIONS, SUPPORTS AND LOADINGS SPECIFIED BY FABRICATOR TO BE VERIFIED BY BUILDING DESIGNER

BEARINGS

JT	FACTORED GROSS REACTION VERT	HORZ	MAXIMUM FACTORED GROSS REACTION DOWN	HORZ	UPLIFT	INPUT BRG IN-SX	REQRD BRG IN-SX
B	193	0	193	0	0	4-10-14	3-2
D	193	0	193	0	0	4-10-14	3-2
F	142	0	142	0	0	4-10-14	3-2

UNFACTORED REACTIONS

JT	1ST LCASE COMBINED	MAX./MIN. COMPONENT REACTIONS SNOW	LIVE	PERM.LIVE	WIND	DEAD	SOIL
B	135	95 / 0	0 / 0	0 / 0	0 / 0	41 / 0	0 / 0
D	135	95 / 0	0 / 0	0 / 0	0 / 0	41 / 0	0 / 0
F	105	46 / 0	0 / 0	0 / 0	0 / 0	59 / 0	0 / 0

BEARING MATERIAL TO BE SPF NO.2 OR BETTER AT JOINT(S) B, D, F

BRACING

TOP CHORD TO BE SHEATHED OR MAX. PURLIN SPACING = 6.25 FT.
MAX. UNBRACED BOTTOM CHORD LENGTH = 10.00 FT OR RIGID CEILING DIRECTLY APPLIED.

ALL PITCH BREAKS AND PERIMETER CORNER JOINTS MUST BE LATERALLY RESTRAINED.

LOADING

TOTAL LOAD CASES: (4)

CHORDS MEMB. FR-TO	MAX. FACTORED FORCE (LBS)	FACTORED VERT. LOAD LC1 (PLF) FROM	TO	MAX CSI (LC)	MAX. UNBRAC LENGTH	WEBS MEMB. FR-TO	MAX. FACTORED FORCE (LBS)	MAX CSI (LC)
A- B	0 / 10	-78.0	-78.0	0.01 (1)	10.00	F- C	-85 / 0	0.02 (1)
B- C	-65 / 0	-78.0	-78.0	0.08 (1)	6.25			
C- D	-65 / 0	-78.0	-78.0	0.08 (1)	6.25			
D- E	0 / 10	-78.0	-78.0	0.01 (1)	10.00			
B- F	0 / 38	-18.5	-18.5	0.03 (4)	10.00			
F- D	0 / 38	-18.5	-18.5	0.03 (4)	10.00			

[M]

DESIGN CRITERIA

SPECIFIED LOADS:

TOP CH.	LL =	21.0	PSF
	DL =	6.0	PSF
BOT CH.	LL =	0.0	PSF
	DL =	7.4	PSF
TOTAL LOAD	=	34.4	PSF

SPACING = 24.0 IN. C/C

THIS TRUSS IS DESIGNED FOR RESIDENTIAL OR SMALL BUILDING REQUIREMENTS OF PART 9, NBCC 2010, NBCC 2015

THIS DESIGN COMPLIES WITH:
- PART 9 OF OBC 2012, OBC 2018
- CSA 086-09, CSA 086-14
- TPIC 2011, TPIC 2014

(55 % OF 23.0 P.S.F. G.S.L. PLUS 8.4 P.S.F. RAIN LOAD) EQUALS 21.0 P.S.F. SPECIFIED ROOF LIVE LOAD

CSI: TC=0.08/1.00 (C-D:1) , BC=0.03/1.00 (B-F:4) , WB=0.02/1.00 (C-F:1) , SSI=0.04/1.00 (C-D:1)

DOL LUMBER=1.00 NAIL=1.00 LS BEND=1.10 COMP=1.10 SHEAR=1.10 TENS= 1.10

COMPANION LIVE LOAD FACTOR = 1.00

TRUSS PLATE MANUFACTURER IS NOT RESPONSIBLE FOR QUALITY CONTROL IN THE TRUSS MANUFACTURING PLANT .

NAIL VALUES

PLATE	GRIP(DRY) (PSI) MAX	MIN	SHEAR (PLI) MAX	MIN	SECTION (PLI) MAX	MIN
MT20	618	354	1667	788	1987	1656

PLATE PLACEMENT TOL. = 0.250 Inches

PLATE ROTATION TOL. = 5.0 Deg.

JSI GRIP= 0.23 (D) (INPUT = 0.90)
JSI METAL= 0.09 (D) (INPUT = 1.00)

A-18023286

JOB NAME	TRUSS NAME	QUANTITY	PLY	JOB DESC.	DRWG NO.
291811	H21A	1	2	TRUSS DESC.	

Alpa Roof Truss, Maple

Version 8.200 S Jan 6 2018 MiTek Industries, Inc. Fri Feb 16 13:06:46 2018 Page 1

ID:84gOFYESM8s1JmDO6_uSGRyQWjP-j_tpUUGEioTSJV1039IMxLZ5UQOKMA6GgEFNIlzkZI7

Scale = 1:58.2

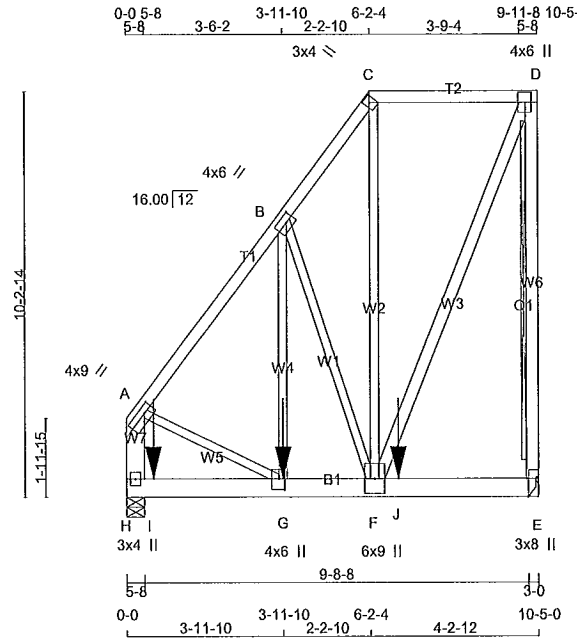

TOTAL WEIGHT = 2 X 83 = 166 lb

[M]

LUMBER

N. L. G. A. RULES

CHORDS	SIZE		LUMBER	DESCR.
A - C	2x4	DRY	No.2	SPF
C - D	2x4	DRY	No.2	SPF
E - D	2x4	DRY	No.2	SPF
H - A	2x6	DRY	No.2	SPF
H - E	2x6	DRY	No.2	SPF
ALL WEBS EXCEPT	2x3	DRY	No.2	SPF
F - D	2x4	DRY	No.2	SPF

DRY: SEASONED LUMBER.

DESIGN CONSISTS OF 2 TRUSSES BUILT SEPARATELY THEN FASTENED TOGETHER AS FOLLOWS:

CHORDS	#ROWS	SURFACE SPACING (IN)	LOAD(PLF)
TOP CHORDS : (0.122"X3") SPIRAL NAILS			
A- C	1	12	TOP
C- D	1	12	TOP
D- E	1	12	TOP
H- A	2	6	SIDE(81.0)
BOTTOM CHORDS : (0.122"X3") SPIRAL NAILS			
H- E	2	8	SIDE(320.4)
WEBS : (0.122"X3") SPIRAL NAILS			
B- G	1	6	SIDE(246.6)
2x3	1	6	
2x4	1	6	

NAILS TO BE DRIVEN FROM ONE SIDE ONLY.

GIRDER NAILING ASSUMES NAILED HANGERS ARE FASTENED WITH MIN. 3-0 INCH NAILS.

TOP - COMPONENTS ARE LOADED FROM THE TOP AND MUST BE PLACED ON TOP EDGE OF ALL PLIES FOR THE LOAD TO BE TRANSFERRED TO EACH PLY.

SIDE - PLF SHOWN IS THE EQUIVALENT UDL APPLIED TO ONE SIDE THAT THE CORRESPONDING NAILING PATTERN SHALL BE CAPABLE OF TRANSFERING. REMAINING PLF MUST BE APPLIED ON THE OPPOSITE SIDE OR ON THE TOP.

NOTE: Lateral brace(s) shown shall be 1x4 for Part 9 design as per OBC 9.23.13.11, and no less than 2x4 for Part 4 design

REGISTERED PROFESSIONAL ENGINEER
02/16/2018
EDWIN C. FOK
PROVINCE OF ONTARIO

DIMENSIONS, SUPPORTS AND LOADINGS SPECIFIED BY FABRICATOR TO BE VERIFIED BY BUILDING DESIGNER

BEARINGS

JT	FACTORED GROSS REACTION VERT	HORZ	MAXIMUM FACTORED GROSS REACTION DOWN	HORZ	UPLIFT	INPUT BRG IN-SX	REQRD BRG IN-SX
E	4023	0	4023	0	0	HANGER BY OTHERS MIN. SEAT SIZE: 3-0	
H	4130	0	4130	0	0	5-8	2-4

UNFACTORED REACTIONS

JT	1ST LCASE COMBINED	SNOW	MAX./MIN. COMPONENT REACTIONS LIVE	PERM.LIVE	WIND	DEAD	SOIL
E	2868	1751 / 0	0 / 0	0 / 0	0 / 0	1118 / 0	0 / 0
H	2944	1797 / 0	0 / 0	0 / 0	0 / 0	1147 / 0	0 / 0

BEARING MATERIAL TO BE SPF NO.2 OR BETTER AT JOINT(S) H

BRACING

TOP CHORD TO BE SHEATHED OR MAX. PURLIN SPACING = 5.28 FT.
MAX. UNBRACED BOTTOM CHORD LENGTH = 10.00 FT OR RIGID CEILING DIRECTLY APPLIED.

ALL PITCH BREAKS AND PERIMETER CORNER JOINTS MUST BE LATERALLY RESTRAINED.

2x6 DRY SPF No.2 T-BRACE AT D-E

FASTEN T AND I-BRACES TO NARROW EDGE OF WEB WITH ONE ROW PER PLY OF 3" COMMON WIRE NAILS @ 6" O.C. WITH 3" MINIMUM END DISTANCE. BRACE MUST COVER 90% OF WEB LENGTH.

END VERTICAL(S) MUST BE SHEATHED OR HAVE BRACES AS INDICATED IN THE MAX. UNBRACED LENGTH COLUMN OF THE TABLE BELOW

LOADING

TOTAL LOAD CASES: (4)

CHORDS MEMB. FR-TO	MAX. FACTORED FORCE (LBS)	FACTORED VERT. LOAD (PLF) FROM	TO	LC1 MAX CSI (LC)	MAX. UNBRAC LENGTH	WEBS MEMB. FR-TO	MAX. FACTORED FORCE (LBS)	MAX CSI (LC)
A- B	-2908 / 0	-78.0	-78.0	0.15 (1)	5.28	G- B	0 / 1794	0.22 (1)
B- C	-2146 / 0	-78.0	-78.0	0.07 (1)	5.99	B- F	-1535 / 0	0.78 (1)
C- D	-1274 / 0	-78.0	-78.0	0.14 (1)	6.25	F- C	0 / 1472	0.18 (1)
E- D	-3196 / 0	0.0	0.0	0.49 (1)	7.81	F- D	0 / 3301	0.29 (1)
H- A	-3147 / 0	0.0	0.0	0.13 (1)	7.78	A- G	0 / 1878	0.23 (1)
H- I	0 / 0	-18.5	-18.5	0.27 (1)	10.00			
I- G	0 / 0	-249.6	-249.6	0.27 (1)	10.00			
G- F	0 / 1753	-659.4	-659.4	0.45 (1)	10.00			
F- J	0 / 0	-659.4	-659.4	0.33 (1)	10.00			
J- E	0 / 0	-473.5	-428.2	0.33 (1)	10.00			

FACTORED CONCENTRATED LOADS (LBS)

JT	LOC.	LC1	MAX-	MAX+	FACE	DIR.	TYPE
G	3-11-10	-1384	-1384	---	FRONT	VERT	TOTAL
I	8-4	-804	-804	---	FRONT	VERT	TOTAL
J	6-10-12	-804	-804	---	FRONT	VERT	TOTAL

DESIGN CRITERIA

*** SPECIAL LOADS ANALYSIS ***
GEOMETRY AND/OR BASIC LOADS CHANGED BY USER.
LOADS WERE DERIVED FROM USER INPUT
NO FURTHER MODIFICATIONS WERE MADE

SPECIFIED LOADS:

TOP CH.	LL	=	21.0	PSF
	DL	=	6.0	PSF
BOT CH.	LL	=	0.0	PSF
	DL	=	7.4	PSF
TOTAL LOAD		=	34.4	PSF

SPACING = 24.0 IN. C/C

LOADING IN FLAT SECTION BASED ON A SLOPE OF 2.00/12 MINIMUM

GIRDER TYPE: CStdGirder
START DISTANCE = 8-4
START SPAN CARRIED = 11-7-0
END DISTANCE = 6-10-12
END SPAN CARRIED = 11-7-0
END WALL WIDTH = 0-0
APPLIED TO FRONT SIDE OF BOTTOM CHORD.
- ADDT'L LOADS BASED ON 55 % OF GSL.

GIRDER TYPE: CStdGirder
START DISTANCE = 6-10-12
START SPAN CARRIED = 3-10-8
END DISTANCE = 10-5-0
END SPAN CARRIED = 2-0-0
END WALL WIDTH = 0-0
APPLIED TO FRONT SIDE OF BOTTOM CHORD.
- ADDT'L LOADS BASED ON 55 % OF GSL.

GIRDER TYPE: CStdGirder
START DISTANCE = 3-11-10
START SPAN CARRIED = 18-11-14
END DISTANCE = 10-5-0
END SPAN CARRIED = 18-11-14
END WALL WIDTH = 0-0
APPLIED TO FRONT SIDE OF BOTTOM CHORD.
- ADDT'L LOADS BASED ON 55 % OF GSL.

*** NON STANDARD GIRDER ***
ADDT'L USER-DEFINED LOADS APPLIED TO ALL LOAD CASES.

THIS TRUSS IS DESIGNED FOR RESIDENTIAL OR SMALL BUILDING REQUIREMENTS OF PART 9, NBCC 2010, NBCC 2015

THIS DESIGN COMPLIES WITH:
- PART 9 OF OBC 2012, OBC 2018
- CSA 086-09, CSA 086-14
- TPIC 2011, TPIC 2014

(55 % OF 23.0 P.S.F. G.S.L. PLUS 8.4 P.S.F. RAIN LOAD) EQUALS 21.0 P.S.F. SPECIFIED ROOF LIVE LOAD

ALLOWABLE DEFL.(LL)= L/360 (0.35")
CALCULATED VERT. DEFL.(LL) = L/ 999 (0.03")
ALLOWABLE DEFL.(TL)= L/360 (0.35")
CALCULATED VERT. DEFL.(TL) = L/ 999 (0.06")

A-18023287

CONTINUED ON PAGE 2

JOB NAME	TRUSS NAME	QUANTITY	PLY	JOB DESC.	DRWG NO.
291811	H21A	1	2	TRUSS DESC.	

PLATES (table is in inches)

JT	TYPE	PLATES	W	LEN	Y	X
A	TMVW-t	MT20	4.0	9.0	1.75	3.00
B	TMWW-t	MT20	4.0	6.0	2.00	2.50
C	TTW+h	MT20	3.0	4.0	1.75	1.25
D	TMVW+p	MT20	4.0	6.0	3.00	1.75
E	BMV1+t	MT20	3.0	8.0	Edge	0.50
F	BMWWW+t	MT20	6.0	9.0		
G	BMWW+t	MT20	4.0	6.0	3.25	1.75
H	BMV1+p	MT20	3.0	4.0		

Edge - INDICATES REFERENCE CORNER OF PLATE TOUCHES EDGE OF CHORD.

HANGERS NOTES

1) SPECIAL HANGER(S) OR CONNECTION(S) REQUIRED TO SUPPORT CONCENTRATED LOAD(S) 803.7 lbs FACTORED DOWN AT 8-4, AND 803.7 lbs FACTORED DOWN AT 6-10-12, AND 1384.4 lbs FACTORED DOWN AT 3-11-10 ON BOTTOM CHORD. DESIGN FOR UNSPECIFIED CONNECTION(S) IS DELEGATED TO THE BUILDING DESIGNER.

NOTE: Lateral brace(s) shown shall be 1x4 for Part 9 design as per OBC 9.23.13.11, and no less than 2x4 for Part 4 design

REGISTERED PROFESSIONAL ENGINEER
02/16/2018
EDWIN C. FOK
PROVINCE OF ONTARIO

CSI: TC=0.49/1.00 (D-E:1) , BC=0.45/1.00 (F-G:1) , WB=0.78/1.00 (B-F:1) , SSI=0.65/1.00 (E-F:1)

DOL LUMBER=1.00 NAIL=1.00 LS BEND=1.00 COMP=1.00 SHEAR=1.00 TENS= 1.00

COMPANION LIVE LOAD FACTOR = 1.00

AUTOSOLVE RIGHT HEEL ONLY

TRUSS PLATE MANUFACTURER IS NOT RESPONSIBLE FOR QUALITY CONTROL IN THE TRUSS MANUFACTURING PLANT .

NAIL VALUES

PLATE	GRIP(DRY) (PSI) MAX	MIN	SHEAR (PLI) MAX	MIN	SECTION (PLI) MAX	MIN
MT20	618	354	1667	788	1987	1656

PLATE PLACEMENT TOL. = 0.250 inches

PLATE ROTATION TOL. = 5.0 Deg.

JSI GRIP= 0.87 (G) (INPUT = 0.90)
JSI METAL= 0.39 (G) (INPUT = 1.00)

A-1802328 7(1)

JOB NAME	TRUSS NAME	QUANTITY	PLY	JOB DESC.	DRWG NO.
291811	H22	2	1	TRUSS DESC.	

Alpa Roof Truss, Maple

Version 8.200 S Jan 6 2018 MiTek Industries, Inc. Fri Feb 16 13:03:20 2018 Page 1
ID:84gOFYESM8s1JmDO6_uSGRyQWjP-IMQxF2m0CVWhbrHQ_ub3bv1rcN8V4BXxIBLTWhzkZoL

Scale = 1:51.1

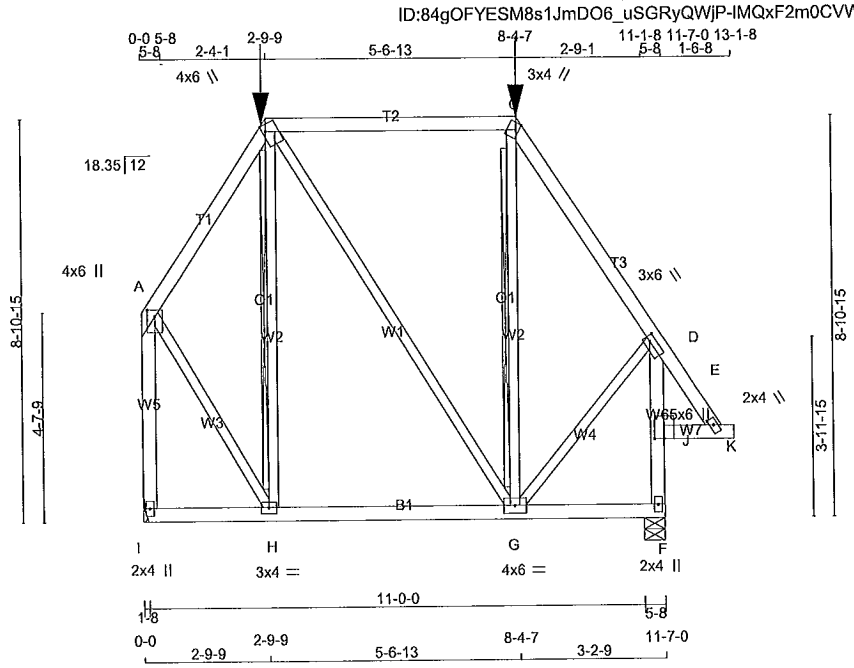

TOTAL WEIGHT = 2 X 75 = 151 lb [M]

LUMBER
N. L. G. A. RULES

CHORDS	SIZE		LUMBER	DESCR.
A - B	2x4	DRY	No.2	SPF
B - C	2x4	DRY	No.2	SPF
C - E	2x4	DRY	No.2	SPF
I - A	2x4	DRY	No.2	SPF
F - D	2x4	DRY	No.2	SPF
I - F	2x4	DRY	No.2	SPF
ALL WEBS EXCEPT	2x3	DRY	No.2	SPF
J - K	2x4	DRY	No.2	SPF

DRY: SEASONED LUMBER.

PLATES (table is in inches)

JT	TYPE	PLATES	W	LEN	Y	X
A	TMVW+p	MT20	4.0	6.0	1.75	2.00
B	TTWW+m	MT20	4.0	6.0	Edge	0.75
C	TTW+m	MT20	3.0	4.0	Edge	0.75
D	TMVW-t	MT20	3.0	6.0	1.50	1.50
E	TWM-I	MT20	2.0	4.0	1.00	1.75
F	BMV1+p	MT20	2.0	4.0		
G	BMWWW-t	MT20	4.0	6.0		
H	BMWW-t	MT20	3.0	4.0		
I	BMV1+p	MT20	2.0	4.0		
J	VMW*-I	MT20	5.0	6.0	2.50	

Edge - INDICATES REFERENCE CORNER OF PLATE TOUCHES EDGE OF CHORD.

HANGERS NOTES

1) SPECIAL HANGER(S) OR CONNECTION(S) REQUIRED TO SUPPORT CONCENTRATED LOAD(S) 99.2 lbs FACTORED DOWN AT 8-4-7, AND 86.3 lbs FACTORED DOWN AT 2-9-9 ON TOP CHORD. DESIGN FOR UNSPECIFIED CONNECTION(S) IS DELEGATED TO THE BUILDING DESIGNER.

NOTE: Lateral brace(s) shown shall be 1x4 for Part 9 design as per OBC 9.23.13.11, and no less than 2x4 for Part 4 design

REGISTERED PROFESSIONAL ENGINEER
02/16/2018
EDWIN C. FOK
PROVINCE OF ONTARIO

DIMENSIONS, SUPPORTS AND LOADINGS SPECIFIED BY FABRICATOR TO BE VERIFIED BY BUILDING DESIGNER

BEARINGS

JT	FACTORED GROSS REACTION VERT	HORZ	MAXIMUM FACTORED GROSS REACTION DOWN	HORZ	UPLIFT	INPUT BRG IN-SX	REQRD BRG IN-SX
I	803	0	803	0	0	HANGER BY OTHERS MIN. SEAT SIZE: 1-8	
F	898	0	898	0	0	5-8	1-8

UNFACTORED REACTIONS

JT	1ST LCASE COMBINED	MAX./MIN. COMPONENT REACTIONS SNOW	LIVE	PERM.LIVE	WIND	DEAD	SOIL
I	573	347 / 0	0 / 0	0 / 0	0 / 0	225 / 0	0 / 0
F	639	399 / 0	0 / 0	0 / 0	0 / 0	240 / 0	0 / 0

BEARING MATERIAL TO BE SPF NO.2 OR BETTER AT JOINT(S) F

BRACING

TOP CHORD TO BE SHEATHED OR MAX. PURLIN SPACING = 6.25 FT.
MAX. UNBRACED BOTTOM CHORD LENGTH = 10.00 FT OR RIGID CEILING DIRECTLY APPLIED.

MAX. UNBRACED INTERIOR CHORD LENGTH = 10.00 FT

ALL PITCH BREAKS AND PERIMETER CORNER JOINTS MUST BE LATERALLY RESTRAINED.

2x4 DRY SPF No.2 T-BRACE AT B-H, C-G

FASTEN T AND I-BRACES TO NARROW EDGE OF WEB WITH ONE ROW PER PLY OF 3" COMMON WIRE NAILS @ 6" O.C. WITH 3" MINIMUM END DISTANCE. BRACE MUST COVER 90% OF WEB LENGTH.

END VERTICAL(S) MUST BE SHEATHED OR HAVE BRACES AS INDICATED IN THE MAX. UNBRACED LENGTH COLUMN OF THE TABLE BELOW

LOADING

TOTAL LOAD CASES: (4)

CHORDS

MEMB. FR-TO	MAX. FACTORED FORCE (LBS)	FACTORED VERT. LOAD (PLF) FROM	TO	LC1	MAX CSI (LC)	MAX. UNBRAC LENGTH
A- B	-413 / 0	-78.0	-78.0	0.12 (1)	6.25	
B- C	-239 / 0	-114.5	-114.5	0.67 (1)	6.25	
C- D	-469 / 0	-78.0	-78.0	0.16 (1)	6.25	
D- E	0 / 25	-78.0	-78.0	0.16 (1)	10.00	
I- A	-782 / 0	0.0	0.0	0.31 (1)	7.81	
F- J	-866 / 0	0.0	0.0	0.17 (1)	7.81	
J- D	-866 / 0	0.0	0.0	0.17 (1)	7.81	
I- H	0 / 0	-27.2	-27.2	0.14 (4)	10.00	
H- G	0 / 221	-27.2	-27.2	0.17 (4)	10.00	
G- F	0 / 13	-27.2	-27.2	0.14 (4)	10.00	

WEBS

MEMB. FR-TO	MAX. FACTORED FORCE (LBS)	MAX CSI (LC)
H- B	-194 / 16	0.12 (1)
B- G	0 / 32	0.01 (1)
G- C	-140 / 40	0.08 (1)
A- H	0 / 395	0.10 (1)
G- D	0 / 335	0.08 (1)
J- E	0 / 25	0.00 (1)
E- K	0 / 0	0.00 (1)

FACTORED CONCENTRATED LOADS (LBS)

JT	LOC.	LC1	MAX-	MAX+	FACE	DIR.	TYPE
B	2-9-9	-86	-86	—	FRONT	VERT	TOTAL
C	8-4-7	-99	-99	---	FRONT	VERT	TOTAL

DESIGN CRITERIA

SPECIFIED LOADS:

TOP CH.	LL =	21.0	PSF
	DL =	6.0	PSF
BOT CH.	LL =	0.0	PSF
	DL =	7.4	PSF
TOTAL LOAD	=	34.4	PSF

SPACING = 24.0 IN. C/C

LOADING IN FLAT SECTION BASED ON A SLOPE OF 2.00/12 MINIMUM

GIRDER TYPE: CPrimeHip
LEFT SETBACK = 2-9-9
RIGHT SETBACK = 3-2-9
END SETBACK = 3-10-8
END WALL WIDTH = 0-0
CORNER FRAMING TYPE: CONVENTIONAL
END JACK TYPE: CONVENTIONAL
APPLIED TO FRONT SIDE
- ADDT'L LOADS BASED ON 55 % OF GSL.

THIS TRUSS IS DESIGNED FOR RESIDENTIAL OR SMALL BUILDING REQUIREMENTS OF PART 9, NBCC 2010, NBCC 2015

THIS DESIGN COMPLIES WITH:
- PART 9 OF OBC 2012, OBC 2018
- CSA 086-09, CSA 086-14
- TPIC 2011, TPIC 2014

(55 % OF 23.0 P.S.F. G.S.L. PLUS 8.4 P.S.F. RAIN LOAD) EQUALS 21.0 P.S.F. SPECIFIED ROOF LIVE LOAD

ALLOWABLE DEFL.(LL)= L/360 (0.39")
CALCULATED VERT. DEFL.(LL) = L/ 999 (0.01")
ALLOWABLE DEFL.(TL)= L/360 (0.39")
CALCULATED VERT. DEFL.(TL) = L/ 999 (0.03")

CSI: TC=0.67/1.00 (B-C:1) , BC=0.17/1.00 (G-H:4) , WB=0.12/1.00 (B-H:1) , SSI=0.27/1.00 (B-C:1)

DOL LUMBER=1.00 NAIL=1.00 LS BEND=1.00 COMP=1.00 SHEAR=1.00 TENS= 1.00

COMPANION LIVE LOAD FACTOR = 1.00

TRUSS PLATE MANUFACTURER IS NOT RESPONSIBLE FOR QUALITY CONTROL IN THE TRUSS MANUFACTURING PLANT .

NAIL VALUES

PLATE	GRIP(DRY) (PSI) MAX	MIN	SHEAR (PLI) MAX	MIN	SECTION (PLI) MAX	MIN
MT20	618	354	1667	788	1987	1656

PLATE PLACEMENT TOL. = 0.250 inches

PLATE ROTATION TOL. = 5.0 Deg.

JSI GRIP= 0.72 (H) (INPUT = 0.90)
JSI METAL= 0.18 (F) (INPUT = 1.00)

A-18023288

JOB NAME	TRUSS NAME	QUANTITY	PLY	JOB DESC.	DRWG NO.
291811	H23	3	1	TRUSS DESC.	

Alpa Roof Truss, Maple

Version 8.200 S Jan 6 2018 MiTek Industries, Inc. Fri Feb 16 13:03:28 2018 Page 1

ID:84gOFYESM8s1JmDO6_uSGRyQWjP-Wvvywnt1KyWYY4uzSaIxvbMJQcuGype78QHupEzkZoD

Scale = 1:65.8

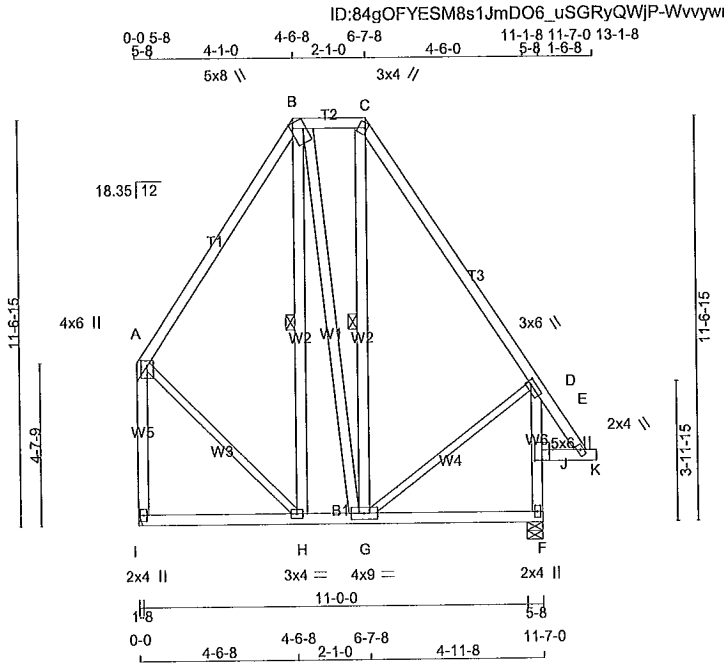

TOTAL WEIGHT = 3 X 97 = 290 lb

[M][F]

LUMBER

N. L. G. A. RULES

CHORDS	SIZE		LUMBER	DESCR.
A - B	2x4	DRY	No.2	SPF
B - C	2x4	DRY	No.2	SPF
C - E	2x4	DRY	No.2	SPF
I - A	2x4	DRY	No.2	SPF
F - D	2x4	DRY	No.2	SPF
I - F	2x4	DRY	No.2	SPF
ALL WEBS	2x4	DRY	No.2	SPF
EXCEPT				
A - H	2x3	DRY	No.2	SPF
G - D	2x3	DRY	No.2	SPF

DRY: SEASONED LUMBER.

PLATES (table is in Inches)

JT	TYPE	PLATES	W	LEN	Y	X
A	TMVW+p	MT20	4.0	6.0	1.75	2.00
B	TTWW+m	MT20	5.0	8.0	Edge	0.75
C	TTW+m	MT20	3.0	4.0	Edge	0.75
D	TMVW-t	MT20	3.0	6.0	1.50	1.50
E	TWM-I	MT20	2.0	4.0	1.00	1.75
F	BMV1+p	MT20	2.0	4.0		
G	BMWWW-t	MT20	4.0	9.0		
H	BMWW-t	MT20	3.0	4.0		
I	BMV1+p	MT20	2.0	4.0		
J	VMW*-I	MT20	5.0	6.0	2.50	

Edge - INDICATES REFERENCE CORNER OF PLATE TOUCHES EDGE OF CHORD.

NOTE: Lateral brace(s) shown shall be 1x4 for Part 9 design as per OBC 9.23.13.11, and no less than 2x4 for Part 4 design

REGISTERED PROFESSIONAL ENGINEER
02/16/2018
EDWIN C. FOK
PROVINCE OF ONTARIO

DIMENSIONS, SUPPORTS AND LOADINGS SPECIFIED BY FABRICATOR TO BE VERIFIED BY BUILDING DESIGNER

BEARINGS

JT	FACTORED GROSS REACTION VERT	HORZ	MAXIMUM FACTORED GROSS REACTION DOWN	HORZ	UPLIFT	INPUT BRG	REQRD BRG
I	554	0	554	0	0	IN-SX	IN-SX
						HANGER BY OTHERS	
						MIN. SEAT SIZE: 1-8	
F	657	0	657	0	0	5-8	1-8

UNFACTORED REACTIONS

JT	1ST LCASE COMBINED	MAX./MIN. COMPONENT REACTIONS SNOW	LIVE	PERM.LIVE	WIND	DEAD	SOIL
I	395	241 / 0	0 / 0	0 / 0	0 / 0	154 / 0	0 / 0
F	466	296 / 0	0 / 0	0 / 0	0 / 0	170 / 0	0 / 0

BEARING MATERIAL TO BE SPF NO.2 OR BETTER AT JOINT(S) F

BRACING

TOP CHORD TO BE SHEATHED OR MAX. PURLIN SPACING = 6.25 FT.
MAX. UNBRACED BOTTOM CHORD LENGTH = 10.00 FT OR RIGID CEILING DIRECTLY APPLIED.

MAX. UNBRACED INTERIOR CHORD LENGTH = 10.00 FT

ALL PITCH BREAKS AND PERIMETER CORNER JOINTS MUST BE LATERALLY RESTRAINED.

1 LATERAL BRACE(S) AT 1/ 2 LENGTH OF B-H, C-G.

END VERTICAL(S) MUST BE SHEATHED OR HAVE BRACES AS INDICATED IN THE MAX. UNBRACED LENGTH COLUMN OF THE TABLE BELOW

LOADING

TOTAL LOAD CASES: (4)

CHORDS

MEMB. FR-TO	MAX. FACTORED FORCE (LBS)	FACTORED VERT. LOAD LC1 (PLF) FROM	TO	MAX CSI (LC)	MAX. UNBRAC LENGTH
A- B	-256 / 0	-78.0	-78.0	0.21 (1)	6.25
B- C	-142 / 0	-78.0	-78.0	0.04 (1)	6.25
C- D	-294 / 0	-78.0	-78.0	0.24 (1)	6.25
D- E	-4 / 0	-78.0	-78.0	0.21 (1)	10.00
I- A	-517 / 0	0.0	0.0	0.20 (1)	7.81
F- J	-618 / 0	0.0	0.0	0.03 (1)	7.81
J- D	-618 / 0	0.0	0.0	0.03 (1)	7.81
I- H	0 / 0	-18.5	-18.5	0.08 (4)	10.00
H- G	0 / 139	-18.5	-18.5	0.11 (4)	10.00
G- F	0 / 40	-18.5	-18.5	0.10 (4)	10.00

WEBS

MEMB. FR-TO	MAX. FACTORED FORCE (LBS)	MAX CSI (LC)
H- B	-62 / 18	0.04 (1)
B- G	0 / 18	0.00 (4)
G- C	-16 / 39	0.01 (1)
A- H	0 / 187	0.04 (1)
G- D	0 / 125	0.03 (1)
J- E	0 / 78	0.01 (1)
E- K	0 / 0	0.00 (1)

DESIGN CRITERIA

SPECIFIED LOADS:

TOP CH.	LL	=	21.0	PSF
	DL	=	6.0	PSF
BOT CH.	LL	=	0.0	PSF
	DL	=	7.4	PSF
TOTAL LOAD		=	34.4	PSF

SPACING = 24.0 IN. C/C

LOADING IN FLAT SECTION BASED ON A SLOPE OF 2.00/12 MINIMUM

THIS TRUSS IS DESIGNED FOR RESIDENTIAL OR SMALL BUILDING REQUIREMENTS OF PART 9, NBCC 2010, NBCC 2015

THIS DESIGN COMPLIES WITH:
- PART 9 OF OBC 2012, OBC 2018
- CSA 086-09, CSA 086-14
- TPIC 2011, TPIC 2014

(55 % OF 23.0 P.S.F. G.S.L. PLUS 8.4 P.S.F. RAIN LOAD) EQUALS 21.0 P.S.F. SPECIFIED ROOF LIVE LOAD

ALLOWABLE DEFL.(LL)= L/360 (0.39")
CALCULATED VERT. DEFL.(LL) = L/ 999 (0.00")
ALLOWABLE DEFL.(TL)= L/360 (0.39")
CALCULATED VERT. DEFL.(TL) = L/ 999 (0.02")

CSI: TC=0.24/1.00 (C-D:1) , BC=0.11/1.00 (G-H:4) , WB=0.04/1.00 (B-H:1) , SSI=0.10/1.00 (C-D:1)

DOL LUMBER=1.00 NAIL=1.00 LS BEND=1.10 COMP=1.10 SHEAR=1.10 TENS= 1.10

COMPANION LIVE LOAD FACTOR = 1.00

TRUSS PLATE MANUFACTURER IS NOT RESPONSIBLE FOR QUALITY CONTROL IN THE TRUSS MANUFACTURING PLANT .

NAIL VALUES

PLATE	GRIP(DRY) (PSI) MAX	MIN	SHEAR (PLI) MAX	MIN	SECTION (PLI) MAX	MIN
MT20	618	354	1667	788	1987	1656

PLATE PLACEMENT TOL. = 0.250 Inches

PLATE ROTATION TOL. = 5.0 Deg.

JSI GRIP= 0.42 (D) (INPUT = 0.90)
JSI METAL= 0.13 (F) (INPUT = 1.00)

A-18023289

JOB NAME	TRUSS NAME	QUANTITY	PLY	JOB DESC.	DRWG NO.
292588	H1TA	1	2	TRUSS DESC.	

Alpa Roof Truss, Maple

Version 8.200 S Jan 6 2018 MiTek Industries, Inc. Fri Feb 16 13:30:22 2018 Page 1

ID:84gOFYESM8s1JmDO6_uSGRyQWjP-GPR7ggPRDstYB6H9?YiQKyC7RDg07e5hHXFHSgzkZP?

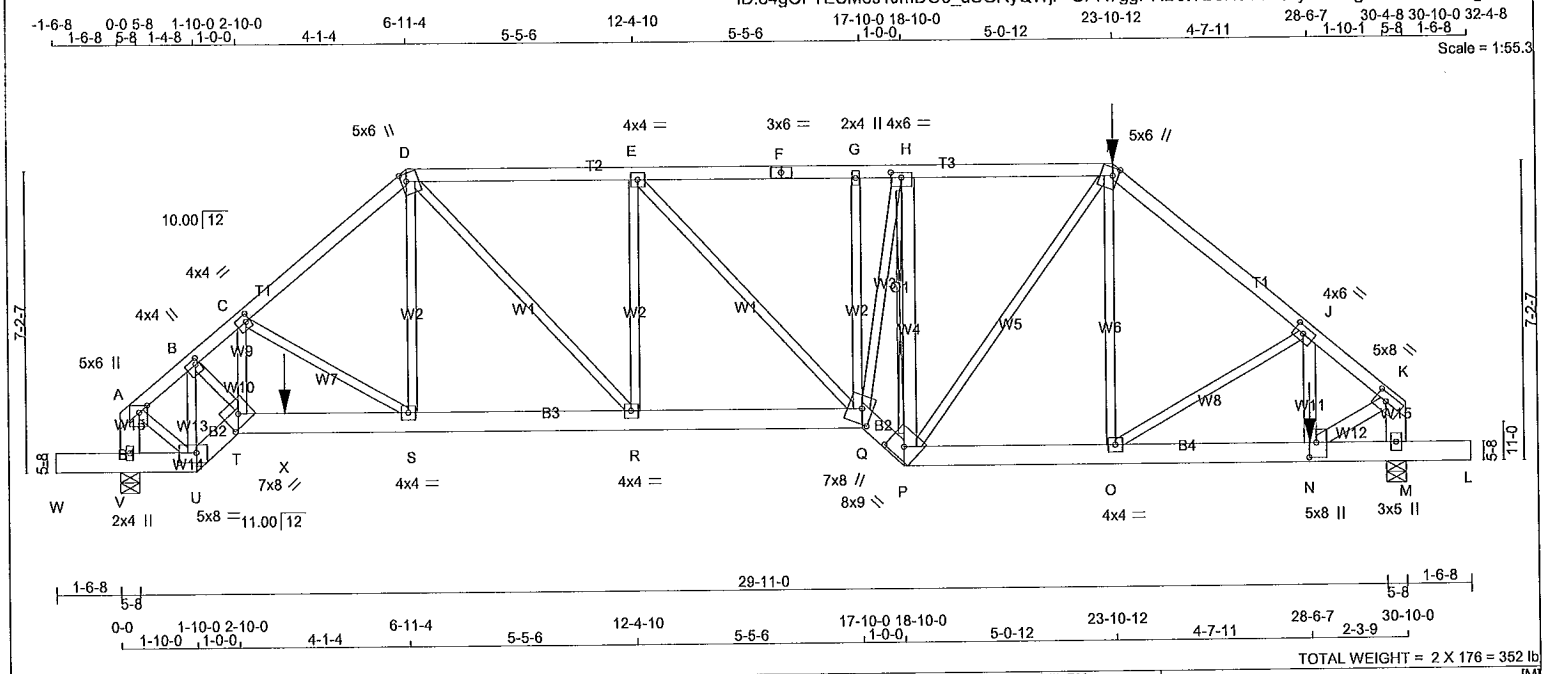

TOTAL WEIGHT = 2 X 176 = 352 lb [M]

LUMBER

N. L. G. A. RULES

CHORDS	SIZE		LUMBER	DESCR.
A - D	2x4	DRY	No.2	SPF
D - F	2x4	DRY	No.2	SPF
F - I	2x4	DRY	No.2	SPF
I - K	2x4	DRY	No.2	SPF
V - A	2x6	DRY	No.2	SPF
M - K	2x6	DRY	No.2	SPF
W - U	2x6	DRY	No.2	SPF
U - T	2x6	DRY	No.2	SPF
T - Q	2x6	DRY	No.2	SPF
Q - P	2x6	DRY	No.2	SPF
P - L	2x6	DRY	No.2	SPF
ALL WEBS	2x3	DRY	No.2	SPF
EXCEPT				
P - H	2x4	DRY	No.2	SPF
N - J	2x4	DRY	No.2	SPF
N - K	2x4	DRY	No.2	SPF

DRY: SEASONED LUMBER.

DESIGN CONSISTS OF 2 TRUSSES BUILT SEPARATELY THEN FASTENED TOGETHER AS FOLLOWS:

CHORDS	#ROWS	SURFACE SPACING (IN)	LOAD(PLF)
TOP CHORDS : (0.122"X3") SPIRAL NAILS			
A- D	1	12	TOP
D- F	1	12	TOP
F- I	1	12	SIDE(47.5)
I- K	1	12	SIDE(61.0)
V- A	2	12	TOP
M- K	2	12	TOP
BOTTOM CHORDS : (0.122"X3") SPIRAL NAILS			
W- U	2	12	TOP
U- T	2	12	TOP
T- Q	2	12	SIDE(23.0)
Q- P	2	12	SIDE(3.6)
P- L	2	12	SIDE(160.1)
WEBS : (0.122"X3") SPIRAL NAILS			
O- I	1	6	SIDE(38.1)
2x3	1	6	
J- N	2	3	SIDE(686.0)
2x4	1	6	

NOTE: Lateral brace(s) shown shall be 1x4 for Part 9 design as per OBC 9.23.13.11, and no less than 2x4 for Part 4 design

REGISTERED PROFESSIONAL ENGINEER
02/16/2018
EDWIN C. FOK
PROVINCE OF ONTARIO

DIMENSIONS, SUPPORTS AND LOADINGS SPECIFIED BY FABRICATOR TO BE VERIFIED BY BUILDING DESIGNER

BEARINGS

JT	FACTORED GROSS REACTION VERT	HORZ	MAXIMUM FACTORED GROSS REACTION DOWN	HORZ	UPLIFT	INPUT BRG IN-SX	REQRD BRG IN-SX
V	2677	0	2677	0	0	5-8	1-8
M	5634	0	5634	0	0	5-8	3-7

UNFACTORED REACTIONS

JT	1ST LCASE COMBINED	SNOW	MAX./MIN. COMPONENT REACTIONS LIVE	PERM.LIVE	WIND	DEAD	SOIL
V	1899	1210 / 0	0 / 0	0 / 0	0 / 0	690 / 0	0 / 0
M	3963	2723 / 0	0 / 0	0 / 0	0 / 0	1240 / 0	0 / 0

BEARING MATERIAL TO BE SPF NO.2 OR BETTER AT JOINT(S) V, M

BRACING

TOP CHORD TO BE SHEATHED OR MAX. PURLIN SPACING = 4.08 FT.
MAX. UNBRACED BOTTOM CHORD LENGTH = 10.00 FT OR RIGID CEILING DIRECTLY APPLIED.

ALL PITCH BREAKS AND PERIMETER CORNER JOINTS MUST BE LATERALLY RESTRAINED.

2x4 DRY SPF No.2 T-BRACE AT H-P

FASTEN T AND I-BRACES TO NARROW EDGE OF WEB WITH ONE ROW PER PLY OF 3" COMMON WIRE NAILS @ 6" O.C. WITH 3" MINIMUM END DISTANCE. BRACE MUST COVER 90% OF WEB LENGTH.

END VERTICAL(S) MUST BE SHEATHED OR HAVE BRACES AS INDICATED IN THE MAX. UNBRACED LENGTH COLUMN OF THE TABLE BELOW

LOADING

TOTAL LOAD CASES: (4)

CHORDS

MEMB. FR-TO	MAX. FACTORED FORCE (LBS)	FACTORED VERT. LOAD (PLF) FROM	TO	LC1 MAX CSI (LC)	MAX. UNBRAC LENGTH
A- B	-2273 / 0	-78.0	-78.0	0.06 (1)	5.88
B- C	-3567 / 0	-78.0	-78.0	0.11 (1)	4.88
C- D	-3181 / 0	-78.0	-78.0	0.13 (1)	5.10
D- E	-3453 / 0	-78.0	-78.0	0.27 (1)	4.78
E- F	-3695 / 0	-78.0	-78.0	0.28 (1)	4.64
F- G	-3695 / 0	-78.0	-78.0	0.28 (1)	4.64
G- H	-3694 / 0	-115.1	-115.1	0.26 (1)	4.61
H- I	-3217 / 0	-115.1	-115.1	0.28 (1)	4.90
I- J	-3567 / 0	-78.0	-78.0	0.19 (1)	4.83
J- K	-5233 / 0	-198.2	-198.2	0.20 (1)	4.08
V- A	-2449 / 0	0.0	0.0	0.09 (1)	7.81
M- K	-5311 / 0	0.0	0.0	0.19 (1)	6.35
W- V	0 / 0	-96.5	-96.5	0.04 (1)	10.00
V- U	-1 / 0	-18.5	-18.5	0.04 (1)	10.00
U- T	0 / 2205	-18.5	-18.5	0.14 (1)	10.00
T- X	0 / 2793	-18.5	-18.5	0.27 (1)	10.00
X- S	0 / 2793	-64.5	-64.5	0.27 (1)	10.00
S- R	0 / 2436	-64.5	-64.5	0.23 (1)	10.00
R- Q	0 / 3453	-64.5	-64.5	0.29 (1)	10.00
Q- P	0 / 4264	-27.3	-27.3	0.28 (1)	10.00
P- O	0 / 2735	-27.3	-27.3	0.22 (1)	10.00
O- N	0 / 4050	-27.3	-27.3	0.36 (1)	10.00
N- M	0 / 0	-55.8	-55.8	0.09 (1)	10.00
M- L	0 / 0	-96.5	-96.5	0.04 (1)	10.00

WEBS

MEMB. FR-TO	MAX. FACTORED FORCE (LBS)	MAX CSI (LC)
U- B	-2436 / 0	0.22 (1)
B- T	0 / 1970	0.24 (1)
T- C	0 / 177	0.02 (1)
C- S	-432 / 0	0.08 (1)
S- D	0 / 625	0.08 (1)
D- R	0 / 1497	0.19 (1)
R- E	-761 / 0	0.23 (1)
E- Q	0 / 355	0.04 (1)
Q- G	-14 / 11	0.00 (1)
Q- H	0 / 2878	0.36 (1)
P- H	-3445 / 0	0.63 (1)
P- I	0 / 804	0.10 (1)
O- I	0 / 1029	0.13 (1)
O- J	-1561 / 0	0.41 (1)
N- J	0 / 1416	0.13 (1)
A- U	0 / 1954	0.24 (1)
N- K	0 / 4419	0.39 (1)

FACTORED CONCENTRATED LOADS (LBS)

JT	LOC.	LC1	MAX-	MAX+	FACE	DIR.	TYPE
I	23-10-12	-217	-217	---	FRONT	VERT	TOTAL
N	28-6-6	-3243	-3243	---	FRONT	VERT	TOTAL

DESIGN CRITERIA

*** SPECIAL LOADS ANALYSIS ***
GEOMETRY AND/OR BASIC LOADS CHANGED BY USER.
LOADS WERE DERIVED FROM USER INPUT
NO FURTHER MODIFICATIONS WERE MADE

SPECIFIED LOADS:

TOP	CH.	LL =	21.0	PSF
		DL =	6.0	PSF
BOT	CH.	LL =	0.0	PSF
		DL =	7.4	PSF
TOTAL	LOAD	=	34.4	PSF

SPACING = 24.0 IN. C/C

LOADING IN FLAT SECTION BASED ON A SLOPE OF 2.00/12 MINIMUM

GIRDER TYPE: CStdGirder
START DISTANCE = 3-11-10
START SPAN CARRIED = 3-10-14
END DISTANCE = 17-10-0
END SPAN CARRIED = 3-10-14
END WALL WIDTH = 0-0
APPLIED TO FRONT SIDE OF BOTTOM CHORD.
- ADDT'L LOADS BASED ON 55 % OF GSL.

GIRDER TYPE: CPrimeHip
SIDE SETBACK = 6-11-4
END SETBACK = 3-10-14
END WALL WIDTH = 0-0
CORNER FRAMING TYPE: CONVENTIONAL
END JACK TYPE: CONVENTIONAL
APPLIED TO FRONT SIDE
- ADDT'L LOADS BASED ON 55 % OF GSL.
LOADS APPLIED TO FIRST 13-0-0 OF SPAN MEASURED FROM THE RIGHT.

GIRDER TYPE: CPrimeHip
SIDE SETBACK = 0-0
END SETBACK = 8-2-0
END WALL WIDTH = 0-0
CORNER FRAMING TYPE: CONVENTIONAL
END JACK TYPE: CONVENTIONAL
APPLIED TO FRONT SIDE
- ADDT'L LOADS BASED ON 55 % OF GSL.
LOADS APPLIED TO FIRST 2-4-0 OF SPAN MEASURED FROM THE RIGHT.

*** NON STANDARD GIRDER ***
ADDT'L USER-DEFINED LOADS APPLIED TO ALL LOAD CASES.

THIS TRUSS IS DESIGNED FOR RESIDENTIAL OR SMALL BUILDING REQUIREMENTS OF PART 9, NBCC 2010, NBCC 2015

THIS DESIGN COMPLIES WITH:
- PART 9 OF OBC 2012, OBC 2018
- CSA 086-09, CSA 086-14
- TPIC 2011, TPIC 2014

DESIGN ASSUMPTIONS
-OVERHANG NOT TO BE ALTERED OR CUT OFF.

A-18023290

CONTINUED ON PAGE 2

JOB NAME	TRUSS NAME	QUANTITY	PLY	JOB DESC.	DRWG NO.
292588	H1TA	1	2	TRUSS DESC.	

NAILS TO BE DRIVEN FROM ONE SIDE ONLY.

GIRDER NAILING ASSUMES NAILED HANGERS ARE FASTENED WITH MIN. 3-0 INCH NAILS.

PLATES (table is in inches)

JT	TYPE	PLATES	W	LEN	Y	X
A	TMVW+p	MT20	5.0	6.0	2.00	2.25
B	TMWW+t	MT20	4.0	4.0	1.50	1.00
C	TMWW-t	MT20	4.0	4.0	2.00	1.25
D	TTWW+m	MT20	5.0	6.0	2.25	1.50
E	TMWW-t	MT20	4.0	4.0		
F	TS-t	MT20	3.0	6.0		
G	TMW+w	MT20	2.0	4.0		
H	TMWW-t	MT20	4.0	6.0	1.50	3.00
I	TTWW+m	MT20	5.0	6.0	2.25	1.50
J	TMWW-t	MT20	4.0	6.0	2.00	2.75
K	TMVW-t	MT20	5.0	8.0	2.25	3.25
M	BMV1+p	MT20	3.0	5.0		
N	BMWW+t	MT20	5.0	8.0	4.25	2.00
O, R, S						
O	BMWW-t	MT20	4.0	4.0		
P	BBWW-h	MT20	8.0	9.0	3.25	4.50
Q	BBWWW+m	MT20	7.0	8.0	4.25	3.00
T	BBWW-h	MT20	7.0	8.0	3.25	4.00
U	BBWW-l	MT20	5.0	8.0	2.75	5.00
V	BMV1+p	MT20	2.0	4.0		

HANGERS NOTES

1) SPECIAL HANGER(S) OR CONNECTION(S) REQUIRED TO SUPPORT CONCENTRATED LOAD(S) 216.9 lbs FACTORED DOWN AT 23-10-12 ON TOP CHORD, AND 256.2 lbs FACTORED DOWN AT 3-11-10, AND 3243.2 lbs FACTORED DOWN AT 28-6-6 ON BOTTOM CHORD. DESIGN FOR UNSPECIFIED CONNECTION(S) IS DELEGATED TO THE BUILDING DESIGNER.

NOTE: Lateral brace(s) shown shall be 1x4 for Part 9 design as per OBC 9.23.13.11, and no less than 2x4 for Part 4 design

REGISTERED PROFESSIONAL ENGINEER
02/16/2018
EDWIN C. FOK
PROVINCE OF ONTARIO

FACTORED CONCENTRATED LOADS (LBS)

JT	LOC.	LC1	MAX-	MAX+	FACE	DIR.	TYPE
X	3-11-10	-256	-256	—	FRONT	VERT	TOTAL

(55 % OF 23.0 P.S.F. G.S.L. PLUS 8.4 P.S.F. RAIN LOAD) EQUALS 21.0 P.S.F. SPECIFIED ROOF LIVE LOAD

ALLOWABLE DEFL.(LL)= L/360 (1.03")
CALCULATED VERT. DEFL.(LL) = L/ 999 (0.09")
ALLOWABLE DEFL.(TL)= L/360 (1.03")
CALCULATED VERT. DEFL.(TL) = L/ 999 (0.18")

CANTILEVER DEFLECTION:
ALLOWABLE DEFL.(LL)= L/120 (0.19")
CALCULATED VERT. DEFL.(LL) = L/ 999 (0.01")
ALLOWABLE DEFL.(TL)= L/120 (0.19")
CALCULATED VERT. DEFL.(TL) = L/ 663 (0.03")

CSI: TC=0.28/1.00 (E-G:1) , BC=0.36/1.00 (N-O:1) , WB=0.63/1.00 (H-P:1) , SSI=0.15/1.00 (H-I:1)

DOL LUMBER=1.00 NAIL=1.00 LS BEND=1.00 COMP=1.00 SHEAR=1.00 TENS= 1.00

COMPANION LIVE LOAD FACTOR = 1.00

AUTOSOLVE HEELS OFF

TRUSS PLATE MANUFACTURER IS NOT RESPONSIBLE FOR QUALITY CONTROL IN THE TRUSS MANUFACTURING PLANT .

NAIL VALUES

PLATE	GRIP(DRY) (PSI)		SHEAR (PLI)		SECTION (PLI)	
	MAX	MIN	MAX	MIN	MAX	MIN
MT20	618	354	1667	788	1987	1656

PLATE PLACEMENT TOL. = 0.250 inches

PLATE ROTATION TOL. = 5.0 Deg.

JSI GRIP= 0.89 (H) (INPUT = 0.90)
JSI METAL= 0.73 (N) (INPUT = 1.00)

A-18023290(2)

JOB NAME	TRUSS NAME	QUANTITY	PLY	JOB DESC.	DRWG NO.
292588	H2TS	4	1	TRUSS DESC.	

Alpa Roof Truss, Maple

Version 8.200 S Jan 6 2018 MiTek Industries, Inc. Fri Feb 16 13:31:06 2018 Page 1

ID:84gOFYESM8s1JmDO6_uSGRyQWjP-zt5lvjx1sNPITtedanUk6E1ZCygsRSdAPNvc?7zkZOJ

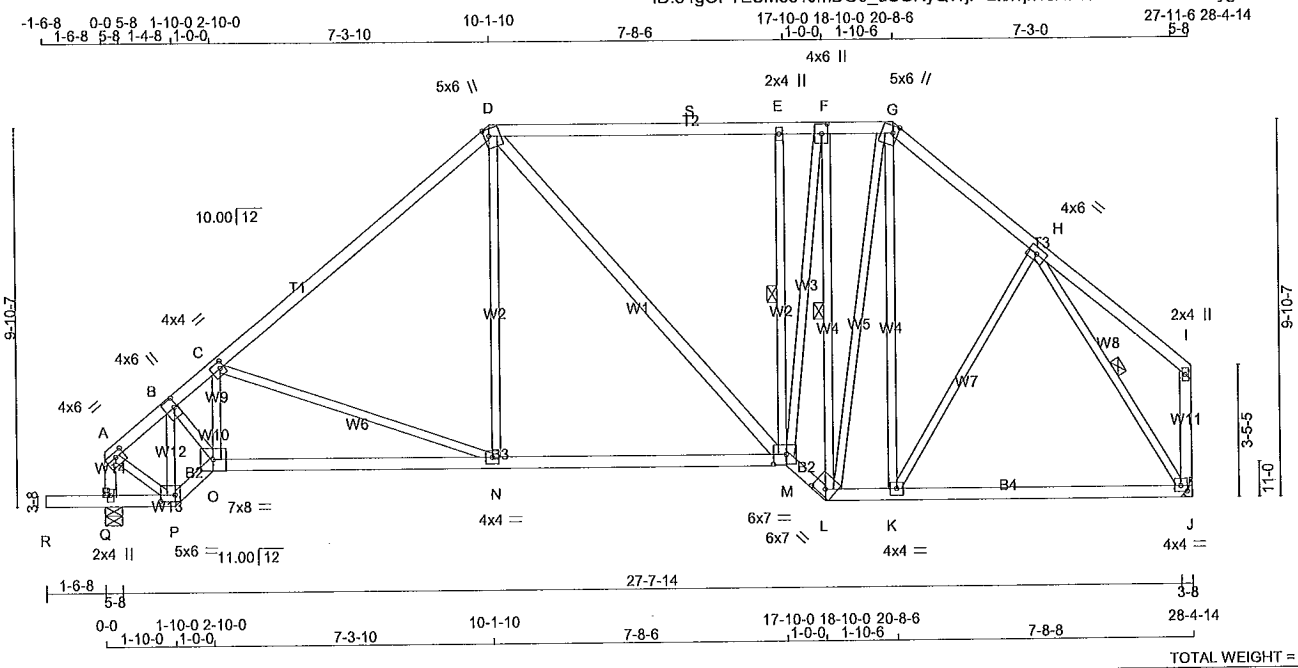

TOTAL WEIGHT = 4 X 159 = 638 lb

[M][F]

LUMBER

N. L. G. A. RULES

CHORDS	SIZE		LUMBER	DESCR.
A - D	2x4	DRY	No.2	SPF
D - G	2x4	DRY	No.2	SPF
G - I	2x4	DRY	No.2	SPF
Q - A	2x4	DRY	No.2	SPF
J - I	2x4	DRY	No.2	SPF
R - P	2x4	DRY	No.2	SPF
P - O	2x4	DRY	No.2	SPF
O - M	2x4	DRY	No.2	SPF
M - L	2x4	DRY	No.2	SPF
L - J	2x4	DRY	No.2	SPF
ALL WEBS EXCEPT	2x3	DRY	No.2	SPF
D - M	2x4	DRY	No.2	SPF

DRY: SEASONED LUMBER.

PLATES (table is in inches)

JT	TYPE	PLATES	W	LEN	Y	X
A	TMVW-t	MT20	4.0	6.0	1.50	2.75
B	TMWW+t	MT20	4.0	6.0	3.00	1.00
C	TMWW-t	MT20	4.0	4.0	2.00	1.25
D	TTWW+m	MT20	5.0	6.0	2.25	1.50
E	TMW+w	MT20	2.0	4.0		
F	TMWW+t	MT20	4.0	6.0	3.00	1.75
G	TTWW+m	MT20	5.0	6.0	2.25	1.50
H	TMWW-t	MT20	4.0	6.0		
I	TMV+p	MT20	2.0	4.0		
J	BMVW1-t	MT20	4.0	4.0	1.75	2.00
K	BMWW-t	MT20	4.0	4.0		
L	BBWW-h	MT20	6.0	7.0	2.00	4.00
M	BBWWW-p	MT20	6.0	7.0	3.00	4.00
N	BMWW-t	MT20	4.0	4.0		
O	BBWW-l	MT20	7.0	8.0		
P	BBWW-l	MT20	5.0	6.0	2.00	4.50
Q	BMV1+p	MT20	2.0	4.0		

NOTE: Lateral brace(s) shown shall be 1x4 for Part 9 design as per OBC 9.23.13.11, and no less than 2x4 for Part 4 design

REGISTERED PROFESSIONAL ENGINEER
02/16/2018
EDWIN C. FOK
PROVINCE OF ONTARIO

DIMENSIONS, SUPPORTS AND LOADINGS SPECIFIED BY FABRICATOR TO BE VERIFIED BY BUILDING DESIGNER

BEARINGS

JT	FACTORED GROSS REACTION VERT	HORZ	MAXIMUM FACTORED GROSS REACTION DOWN	HORZ	UPLIFT	INPUT BRG IN-SX	REQRD BRG IN-SX
Q	1559	0	1559	0	0	5-8	2-5
J	1409	0	1409	0	0	HANGER BY OTHERS	
						MIN. SEAT SIZE: 1-8	

UNFACTORED REACTIONS

JT	1ST LCASE COMBINED	MAX./MIN. COMPONENT REACTIONS SNOW	LIVE	PERM.LIVE	WIND	DEAD	SOIL
Q	1115	663 / 0	0 / 0	0 / 0	0 / 0	452 / 0	0 / 0
J	1008	594 / 0	0 / 0	0 / 0	0 / 0	414 / 0	0 / 0

BEARING MATERIAL TO BE SPF NO.2 OR BETTER AT JOINT(S) Q

BRACING

FOR SECTION D-G, MAX. PURLIN SPACING = 2.00 FT.
FOR OTHER SECTIONS, TOP CHORD TO BE SHEATHED OR MAX. PURLIN SPACING = 4.48 FT.
MAX. UNBRACED BOTTOM CHORD LENGTH = 10.00 FT OR RIGID CEILING DIRECTLY APPLIED.

ALL PITCH BREAKS AND PERIMETER CORNER JOINTS MUST BE LATERALLY RESTRAINED.

1 LATERAL BRACE(S) AT 1/ 2 LENGTH OF E-M, F-L, H-J.

END VERTICAL(S) MUST BE SHEATHED OR HAVE BRACES AS INDICATED IN THE MAX. UNBRACED LENGTH COLUMN OF THE TABLE BELOW

LOADING

TOTAL LOAD CASES: (4)

CHORDS

MEMB. FR-TO	MAX. FACTORED FORCE (LBS)	FACTORED VERT. LOAD (PLF) FROM	TO	LC1	MAX CSI (LC)	MAX. UNBRAC LENGTH
A- B	-1151 / 0	-78.0	-78.0	0.13 (1)	5.80	
B- C	-1742 / 0	-78.0	-78.0	0.47 (1)	4.48	
C- D	-1445 / 0	-78.0	-78.0	0.60 (1)	4.75	
D- S	-1156 / 0	-85.5	-85.5	0.61 (1)	2.00	
S- E	-1156 / 0	-85.5	-85.5	0.61 (1)	2.00	
E- F	-1146 / 0	-85.5	-85.5	0.50 (1)	2.00	
F- G	-947 / 0	-85.5	-85.5	0.06 (1)	2.00	
G- H	-1132 / 0	-78.0	-78.0	0.16 (1)	5.80	
H- I	0 / 21	-78.0	-78.0	0.18 (1)	10.00	
Q- A	-1331 / 0	0.0	0.0	0.14 (1)	7.02	
J- I	-122 / 0	0.0	0.0	0.02 (1)	7.81	
R- Q	0 / 0	-96.5	-96.5	0.16 (1)	10.00	
Q- P	0 / 0	-18.5	-18.5	0.12 (1)	10.00	
P- O	0 / 1095	-18.5	-18.5	0.18 (1)	10.00	
O- N	0 / 1554	-18.5	-18.5	0.45 (4)	10.00	
N- M	0 / 1083	-18.5	-18.5	0.41 (4)	10.00	
M- L	0 / 1264	-18.5	-18.5	0.21 (1)	10.00	
L- K	0 / 849	-18.5	-18.5	0.36 (4)	10.00	
K- J	0 / 762	-18.5	-18.5	0.34 (4)	10.00	

WEBS

MEMB. FR-TO	MAX. FACTORED FORCE (LBS)	MAX CSI (LC)
P- B	-1275 / 0	0.22 (1)
B- O	0 / 1288	0.29 (1)
O- C	-251 / 0	0.04 (1)
C- N	-504 / 0	0.63 (1)
N- D	0 / 333	0.08 (4)
D- M	0 / 109	0.02 (1)
M- E	-836 / 0	0.43 (1)
M- F	0 / 1689	0.38 (1)
L- F	-1378 / 0	0.91 (1)
L- G	0 / 505	0.11 (1)
K- G	0 / 80	0.03 (4)
K- H	0 / 171	0.04 (4)
A- P	0 / 994	0.22 (1)
H- J	-1447 / 0	0.54 (1)

DESIGN CRITERIA

SPECIFIED LOADS:

TOP CH.	LL	=	21.0	PSF
	DL	=	6.0	PSF
BOT CH.	LL	=	0.0	PSF
	DL	=	7.4	PSF
TOTAL LOAD		=	34.4	PSF

SPACING = 24.0 IN. C/C

LOADING IN FLAT SECTION BASED ON PIGGYBACK TRUSS WITH SLOPES OF 6.00/12 AND -6.00/12 AND RESPECTIVE WALL HEIGHTS OF 0-0 AND 0-0 AND AN ADDITIONAL DEAD LOAD OF 3.0 P.S.F.

THIS TRUSS IS DESIGNED FOR RESIDENTIAL OR SMALL BUILDING REQUIREMENTS OF PART 9, NBCC 2010, NBCC 2015

THIS DESIGN COMPLIES WITH:
- PART 9 OF OBC 2012, OBC 2018
- CSA 086-09, CSA 086-14
- TPIC 2011, TPIC 2014

DESIGN ASSUMPTIONS
-OVERHANG NOT TO BE ALTERED OR CUT OFF.

(55 % OF 23.0 P.S.F. G.S.L. PLUS 8.4 P.S.F. RAIN LOAD) EQUALS 21.0 P.S.F. SPECIFIED ROOF LIVE LOAD

ALLOWABLE DEFL.(LL)= L/360 (0.95")
CALCULATED VERT. DEFL.(LL) = L/ 999 (0.07")
ALLOWABLE DEFL.(TL)= L/360 (0.95")
CALCULATED VERT. DEFL.(TL) = L/ 999 (0.21")

CANTILEVER DEFLECTION:
ALLOWABLE DEFL.(LL)= L/120 (0.19")
CALCULATED VERT. DEFL.(LL) = L/ 999 (0.00")
ALLOWABLE DEFL.(TL)= L/120 (0.19")
CALCULATED VERT. DEFL.(TL) = L/ 999 (0.00")

CSI: TC=0.61/1.00 (D-E:1) , BC=0.45/1.00 (N-O:4) , WB=0.91/1.00 (F-L:1) , SSI=0.35/1.00 (E-F:1)

DOL LUMBER=1.00 NAIL=1.00 LS BEND=1.10 COMP=1.10 SHEAR=1.10 TENS= 1.10

COMPANION LIVE LOAD FACTOR = 1.00

AUTOSOLVE LEFT HEEL ONLY

TRUSS PLATE MANUFACTURER IS NOT RESPONSIBLE FOR QUALITY CONTROL IN THE TRUSS MANUFACTURING PLANT .

NAIL VALUES

PLATE	GRIP(DRY) (PSI) MAX	MIN	SHEAR (PLI) MAX	MIN	SECTION (PLI) MAX	MIN
MT20	618	354	1667	788	1987	1656

PLATE PLACEMENT TOL. = 0.250 inches

PLATE ROTATION TOL. = 5.0 Deg.

A-18023291

CONTINUED ON PAGE 2

JOB NAME	TRUSS NAME	QUANTITY	PLY	JOB DESC.	DRWG NO.
292588	H3TA	1	2	TRUSS DESC.	

Alpa Roof Truss, Maple

ID:84gOFYESM8s1JmDO6_uSGRyQWjP-iVzohG6xTh5l3XPD7ajyPBUL1W88cvsfoOW8JhzkZLV

Scale = 1:62.1

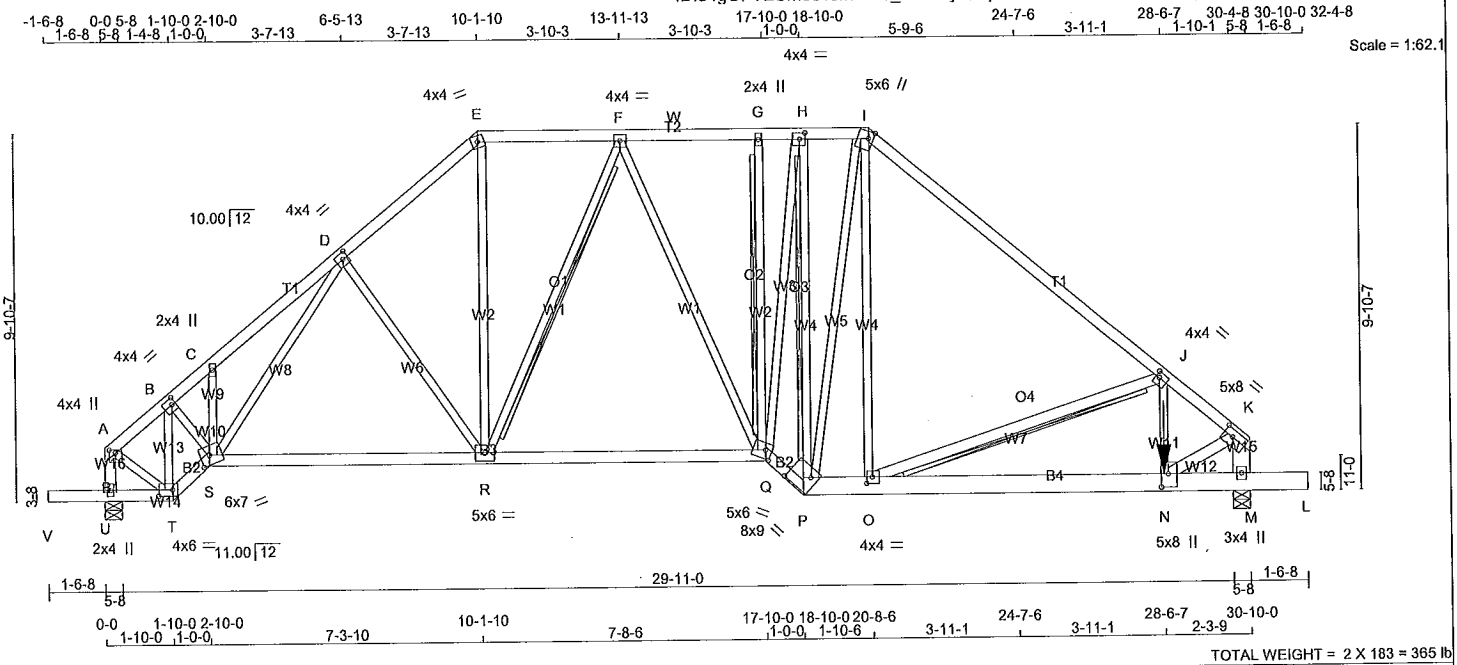

TOTAL WEIGHT = 2 X 183 = 365 lb

[M]

LUMBER

N. L. G. A. RULES

CHORDS	SIZE		LUMBER	DESCR.
A - E	2x4	DRY	No.2	SPF
E - I	2x4	DRY	No.2	SPF
I - K	2x4	DRY	No.2	SPF
U - A	2x4	DRY	No.2	SPF
M - K	2x6	DRY	No.2	SPF
V - T	2x4	DRY	No.2	SPF
T - S	2x4	DRY	No.2	SPF
S - Q	2x4	DRY	No.2	SPF
Q - P	2x4	DRY	No.2	SPF
P - L	2x6	DRY	No.2	SPF
ALL WEBS EXCEPT	2x3	DRY	No.2	SPF
N - K	2x4	DRY	No.2	SPF
O - J	2x4	DRY	No.2	SPF

DRY: SEASONED LUMBER.

DESIGN CONSISTS OF 2 TRUSSES BUILT SEPARATELY THEN FASTENED TOGETHER AS FOLLOWS:

CHORDS	#ROWS	SURFACE SPACING (IN)	LOAD(PLF)
TOP CHORDS : (0.122"X3") SPIRAL NAILS			
A- E	1	12	TOP
E- I	1	12	TOP
I- K	1	12	SIDE(46.2)
U- A	1	12	TOP
M- K	2	12	TOP
BOTTOM CHORDS : (0.122"X3") SPIRAL NAILS			
V- T	1	12	TOP
T- S	1	12	TOP
S- Q	1	12	TOP
Q- P	1	12	TOP
P- L	2	11	SIDE(229.9)
WEBS : (0.122"X3") SPIRAL NAILS			
J- N	1	2	SIDE(616.1)
2x3	1	6	
2x4	1	6	

NAILS TO BE DRIVEN FROM ONE SIDE ONLY.

NOTE: Lateral brace(s) shown shall be 1x4 for Part 9 design as per OBC 9.23.13.11, and no less than 2x4 for Part 4 design

REGISTERED PROFESSIONAL ENGINEER
02/16/2018
EDWIN C. FOK
PROVINCE OF ONTARIO

DIMENSIONS, SUPPORTS AND LOADINGS SPECIFIED BY FABRICATOR TO BE VERIFIED BY BUILDING DESIGNER

BEARINGS

JT	FACTORED GROSS REACTION VERT	HORZ	MAXIMUM FACTORED GROSS REACTION DOWN	HORZ	UPLIFT	INPUT BRG IN-SX	REQRD BRG IN-SX
U	1934	0	1934	0	0	5-8	1-8
M	5002	0	5002	0	0	5-8	2-10

UNFACTORED REACTIONS

JT	1ST LCASE COMBINED	SNOW	MAX./MIN. COMPONENT REACTIONS LIVE	PERM.LIVE	WIND	DEAD	SOIL
U	1378	846 / 0	0 / 0	0 / 0	0 / 0	531 / 0	0 / 0
M	3515	2434 / 0	0 / 0	0 / 0	0 / 0	1081 / 0	0 / 0

BEARING MATERIAL TO BE SPF NO.2 OR BETTER AT JOINT(S) U, M

BRACING

FOR SECTION E-I, MAX. PURLIN SPACING = 2.00 FT.
FOR OTHER SECTIONS, TOP CHORD TO BE SHEATHED OR MAX. PURLIN SPACING = 3.94 FT.
MAX. UNBRACED BOTTOM CHORD LENGTH = 10.00 FT OR RIGID CEILING DIRECTLY APPLIED.

ALL PITCH BREAKS AND PERIMETER CORNER JOINTS MUST BE LATERALLY RESTRAINED.

2x4 DRY SPF No.2 T-BRACE AT F-R, G-Q, H-P, J-O

FASTEN T AND I-BRACES TO NARROW EDGE OF WEB WITH ONE ROW PER PLY OF 3" COMMON WIRE NAILS @ 6" O.C. WITH 3" MINIMUM END DISTANCE. BRACE MUST COVER 90% OF WEB LENGTH.

END VERTICAL(S) MUST BE SHEATHED OR HAVE BRACES AS INDICATED IN THE MAX. UNBRACED LENGTH COLUMN OF THE TABLE BELOW

LOADING

TOTAL LOAD CASES: (4)

CHORDS

MEMB. FR-TO	MAX. FACTORED FORCE (LBS)	FACTORED VERT. LOAD LC1 (PLF) FROM	TO	MAX CSI (LC)	MAX. UNBRAC LENGTH
A- B	-1508 / 0	-78.0	-78.0	0.04 (1)	6.25
B- C	-2357 / 0	-78.0	-78.0	0.03 (1)	5.83
C- D	-2361 / 0	-78.0	-78.0	0.11 (1)	5.74
D- E	-2001 / 0	-78.0	-78.0	0.10 (1)	6.12
E- F	-1530 / 0	-85.5	-85.5	0.12 (1)	2.00
F- W	-1870 / 0	-85.5	-85.5	0.12 (1)	2.00
W- G	-1870 / 0	-85.5	-85.5	0.12 (1)	2.00
G- H	-1868 / 0	-85.5	-85.5	0.03 (1)	2.00
H- I	-1697 / 0	-85.5	-85.5	0.03 (1)	2.00
I- J	-2208 / 0	-78.0	-78.0	0.53 (1)	5.48
J- K	-4699 / 0	-198.2	-198.2	0.43 (1)	3.94
U- A	-1705 / 0	0.0	0.0	0.10 (1)	7.81
M- K	-4737 / 0	0.0	0.0	0.17 (1)	6.65
V- U	0 / 0	-96.5	-96.5	0.09 (1)	10.00
U- T	0 / 0	-18.5	-18.5	0.09 (1)	10.00
T- S	0 / 1470	-18.5	-18.5	0.13 (1)	10.00
S- R	0 / 1705	-18.5	-18.5	0.25 (4)	10.00
R- Q	0 / 1784	-18.5	-18.5	0.26 (4)	10.00
Q- P	0 / 2231	-18.5	-18.5	0.20 (1)	10.00
P- O	0 / 1676	-18.5	-18.5	0.15 (1)	10.00
O- N	0 / 3708	-18.5	-18.5	0.31 (1)	10.00
N- M	0 / 0	-47.0	-47.0	0.05 (1)	10.00
M- L	0 / 0	-96.5	-96.5	0.04 (1)	10.00

WEBS

MEMB. FR-TO	MAX. FACTORED FORCE (LBS)	MAX CSI (LC)
T- B	-1698 / 0	0.16 (1)
B- S	0 / 1298	0.16 (1)
S- C	-190 / 0	0.02 (1)
S- D	0 / 221	0.03 (1)
D- R	-335 / 0	0.14 (1)
R- E	0 / 1026	0.13 (1)
R- F	-641 / 0	0.31 (1)
F- Q	0 / 210	0.03 (1)
Q- G	-133 / 0	0.05 (1)
Q- H	0 / 1491	0.18 (1)
P- H	-1633 / 0	0.80 (1)
P- I	0 / 112	0.01 (4)
O- I	0 / 952	0.12 (1)
N- J	0 / 1657	0.21 (1)
A- T	0 / 1333	0.16 (1)
N- K	0 / 4046	0.36 (1)
O- J	-2176 / 0	0.68 (1)

DESIGN CRITERIA

*** SPECIAL LOADS ANALYSIS ***
GEOMETRY AND/OR BASIC LOADS CHANGED BY USER.
LOADS WERE DERIVED FROM USER INPUT
NO FURTHER MODIFICATIONS WERE MADE

SPECIFIED LOADS:

TOP CH.	LL	=	21.0	PSF
	DL	=	6.0	PSF
BOT CH.	LL	=	0.0	PSF
	DL	=	7.4	PSF
TOTAL LOAD		=	34.4	PSF

SPACING = 24.0 IN. C/C

LOADING IN FLAT SECTION BASED ON PIGGYBACK TRUSS WITH SLOPES OF 6.00/12 AND -6.00/12 AND RESPECTIVE WALL HEIGHTS OF 0-0 AND 0-0 AND AN ADDITIONAL DEAD LOAD OF 3.0 P.S.F.

GIRDER TYPE: CPrimeHip
SIDE SETBACK = 0-0
END SETBACK = 8-2-0
END WALL WIDTH = 0-0
CORNER FRAMING TYPE: CONVENTIONAL
END JACK TYPE: CONVENTIONAL
APPLIED TO FRONT SIDE
- ADDT'L LOADS BASED ON 55 % OF GSL.
LOADS APPLIED TO FIRST 2-4-0 OF SPAN MEASURED FROM THE RIGHT.

*** NON STANDARD GIRDER ***
ADDT'L USER-DEFINED LOADS APPLIED TO ALL LOAD CASES.

THIS TRUSS IS DESIGNED FOR RESIDENTIAL OR SMALL BUILDING REQUIREMENTS OF PART 9, NBCC 2010, NBCC 2015

THIS DESIGN COMPLIES WITH:
- PART 9 OF OBC 2012, OBC 2018
- CSA 086-09, CSA 086-14
- TPIC 2011, TPIC 2014

DESIGN ASSUMPTIONS
-OVERHANG NOT TO BE ALTERED OR CUT OFF.

(55 % OF 23.0 P.S.F. G.S.L. PLUS 8.4 P.S.F. RAIN LOAD) EQUALS 21.0 P.S.F. SPECIFIED ROOF LIVE LOAD

ALLOWABLE DEFL.(LL)= L/360 (1.03")
CALCULATED VERT. DEFL.(LL) = L/ 999 (0.06")
ALLOWABLE DEFL.(TL)= L/360 (1.03")
CALCULATED VERT. DEFL.(TL) = L/ 999 (0.13")

CANTILEVER DEFLECTION:
ALLOWABLE DEFL.(LL)= L/120 (0.19")
CALCULATED VERT. DEFL.(LL) = L/ 999 (0.00")
ALLOWABLE DEFL.(TL)= L/120 (0.19")
CALCULATED VERT. DEFL.(TL) = L/ 999 (0.01")

CSI: TC=0.53/1.00 (I-J:1) , BC=0.31/1.00 (N-O:1) , WB=0.80/1.00 (H-P:1) , SSI=0.14/1.00 (J-K:1)

A-18023292

CONTINUED ON PAGE 2

JOB NAME	TRUSS NAME	QUANTITY	PLY	JOB DESC.	DRWG NO.
292588	H3TA	1	2	TRUSS DESC.	

GIRDER NAILING ASSUMES NAILED HANGERS ARE FASTENED WITH MIN. 3-0 INCH NAILS.

PLATES (table is in inches)

JT	TYPE	PLATES	W	LEN	Y	X
A	TMVW+p	MT20	4.0	4.0	1.00	2.00
B	TMWW-t	MT20	4.0	4.0	2.00	1.25
C	TMW+w	MT20	2.0	4.0		
D	TMWW-t	MT20	4.0	4.0	2.00	1.75
E	TTW-m	MT20	4.0	4.0		
F	TMWW-t	MT20	4.0	4.0		
G	TMW+w	MT20	2.0	4.0		
H	TMWW-t	MT20	4.0	4.0	2.00	1.75
I	TTWW+m	MT20	5.0	6.0	2.25	1.50
J	TMWW-t	MT20	4.0	4.0	1.75	1.25
K	TMVW-t	MT20	5.0	8.0	2.25	3.25
M	BMV1+p	MT20	3.0	4.0		
N	BMWW+t	MT20	5.0	8.0	4.25	2.25
O	BMWW-t	MT20	4.0	4.0	2.00	1.75
P	BBWW-h	MT20	8.0	9.0	5.25	6.75
Q	BBWWW-m	MT20	5.0	6.0	2.75	2.00
R	BMWWW-t	MT20	5.0	6.0		
S	BBWWW-m	MT20	6.0	7.0	3.00	3.00
T	BBWW-l	MT20	4.0	6.0	2.00	4.50
U	BMV1+p	MT20	2.0	4.0		

HANGERS NOTES

1) SPECIAL HANGER(S) OR CONNECTION(S) REQUIRED TO SUPPORT CONCENTRATED LOAD(S) 3243.2 lbs FACTORED DOWN AT 28-6-6 ON BOTTOM CHORD. DESIGN FOR UNSPECIFIED CONNECTION(S) IS DELEGATED TO THE BUILDING DESIGNER.

NOTE: Lateral brace(s) shown shall be 1x4 for Part 9 design as per OBC 9.23.13.11, and no less than 2x4 for Part 4 design

REGISTERED PROFESSIONAL ENGINEER
02/16/2018
EDWIN C. FOK
PROVINCE OF ONTARIO

FACTORED CONCENTRATED LOADS (LBS)

JT	LOC.	LC1	MAX-	MAX+	FACE	DIR.	TYPE
N	28-6-6	-3243	-3243	---	FRONT	VERT	TOTAL

DOL LUMBER=1.00 NAIL=1.00 LS BEND=1.00 COMP=1.00 SHEAR=1.00 TENS= 1.00

COMPANION LIVE LOAD FACTOR = 1.00

AUTOSOLVE LEFT HEEL ONLY

TRUSS PLATE MANUFACTURER IS NOT RESPONSIBLE FOR QUALITY CONTROL IN THE TRUSS MANUFACTURING PLANT .

NAIL VALUES

PLATE	GRIP(DRY) (PSI)		SHEAR (PLI)		SECTION (PLI)	
	MAX	MIN	MAX	MIN	MAX	MIN
MT20	618	354	1667	788	1987	1656

PLATE PLACEMENT TOL. = 0.250 inches

PLATE ROTATION TOL. = 5.0 Deg.

JSI GRIP= 0.90 (Q) (INPUT = 0.90)
JSI METAL= 0.67 (N) (INPUT = 1.00)

A-18023292(2)

JOB NAME	TRUSS NAME	QUANTITY	PLY	JOB DESC.	DRWG NO.
292588	J1T	6	1	TRUSS DESC.	

Alpa Roof Truss, Maple

Version 8.200 S Jan 6 2018 MiTek Industries, Inc. Fri Feb 16 13:34:21 2018 Page 1

ID:84gOFYESM8s1JmDO6_uSGRyQWjP-mONTqOIMxl_dMr25VEUTWMc13Zl4dtFtEDeRLKzkZLG

Scale = 1:40.3

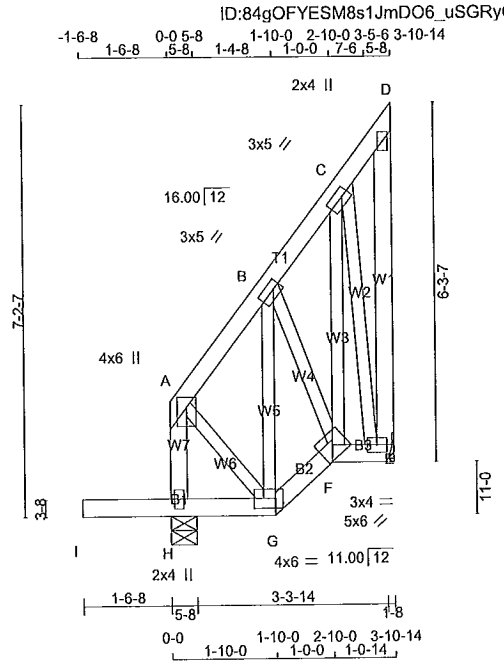

TOTAL WEIGHT = 6 X 37 = 224 lb

[M]

LUMBER

N. L. G. A. RULES

CHORDS	SIZE		LUMBER	DESCR.
H - A	2x4	DRY	No.2	SPF
A - D	2x4	DRY	No.2	SPF
E - D	2x4	DRY	No.2	SPF
I - G	2x4	DRY	No.2	SPF
G - F	2x4	DRY	No.2	SPF
F - E	2x4	DRY	No.2	SPF
ALL WEBS	2x3	DRY	No.2	SPF

DRY: SEASONED LUMBER.

PLATES (table is in inches)

JT	TYPE	PLATES	W	LEN	Y	X
A	TMVW+p	MT20	4.0	6.0	2.00	2.00
B	TMWW-t	MT20	3.0	5.0	1.50	1.50
C	TMWW-t	MT20	3.0	5.0	1.50	1.50
D	TMV+p	MT20	2.0	4.0		
E	BMVW1-t	MT20	3.0	4.0		
F	BBWW-h	MT20	5.0	6.0		
G	BBWW-l	MT20	4.0	6.0	2.00	4.50
H	BMV1+p	MT20	2.0	4.0		

NOTE: Lateral brace(s) shown shall be 1x4 for Part 9 design as per OBC 9.23.13.11, and no less than 2x4 for Part 4 design

REGISTERED PROFESSIONAL ENGINEER
02/16/2018
EDWIN C. FOK
PROVINCE OF ONTARIO

DIMENSIONS, SUPPORTS AND LOADINGS SPECIFIED BY FABRICATOR TO BE VERIFIED BY BUILDING DESIGNER

BEARINGS

JT	FACTORED GROSS REACTION VERT	HORZ	MAXIMUM FACTORED GROSS REACTION DOWN	HORZ	UPLIFT	INPUT BRG IN-SX	REQRD BRG IN-SX
H	366	0	366	0	0	5-8	1-8
E	159	0	159	0	0	HANGER BY OTHERS MIN. SEAT SIZE: 1-8	

UNFACTORED REACTIONS

JT	1ST LCASE COMBINED	MAX./MIN. COMPONENT REACTIONS SNOW	LIVE	PERM.LIVE	WIND	DEAD	SOIL
H	261	159 / 0	0 / 0	0 / 0	0 / 0	102 / 0	0 / 0
E	113	69 / -13	0 / 0	0 / 0	0 / 0	44 / 0	0 / 0

BEARING MATERIAL TO BE SPF NO.2 OR BETTER AT JOINT(S) H

BRACING

TOP CHORD TO BE SHEATHED OR MAX. PURLIN SPACING = 6.25 FT.
MAX. UNBRACED BOTTOM CHORD LENGTH = 10.00 FT OR RIGID CEILING DIRECTLY APPLIED.

ALL PITCH BREAKS AND PERIMETER CORNER JOINTS MUST BE LATERALLY RESTRAINED.

LOADING

TOTAL LOAD CASES: (5)

CHORDS

MEMB. FR-TO	MAX. FACTORED FORCE (LBS)	FACTORED VERT. LOAD LC1 (PLF) FROM	TO	MAX CSI (LC)	MAX. UNBRAC LENGTH
H- A	-138 / 0	0.0	0.0	0.02 (1)	7.81
A- B	-53 / 6	-78.0	-78.0	0.03 (1)	6.25
B- C	-50 / 0	-78.0	-78.0	0.03 (1)	6.25
C- D	-4 / 0	-78.0	-78.0	0.01 (1)	10.00
E- D	-25 / 0	0.0	0.0	0.02 (1)	7.81
I- H	0 / 0	-96.5	-96.5	0.16 (1)	10.00
H- G	0 / 0	-18.5	-18.5	0.16 (1)	10.00
G- F	-5 / 47	-18.5	-18.5	0.01 (1)	10.00
F- E	0 / 20	-18.5	-18.5	0.01 (4)	10.00

WEBS

MEMB. FR-TO	MAX. FACTORED FORCE (LBS)	MAX CSI (LC)
A- G	-4 / 50	0.01 (1)
G- B	-101 / 0	0.03 (1)
B- F	-29 / 13	0.01 (1)
F- C	-2 / 78	0.02 (1)
C- E	-126 / 0	0.05 (1)

CANTILEVER ANALYSIS HAS BEEN CONSIDERED IN THIS DESIGN

DESIGN CRITERIA

SPECIFIED LOADS:

TOP CH.	LL	=	21.0	PSF
	DL	=	6.0	PSF
BOT CH.	LL	=	0.0	PSF
	DL	=	7.4	PSF
TOTAL LOAD		=	34.4	PSF

SPACING = 24.0 IN. C/C

THIS TRUSS IS DESIGNED FOR RESIDENTIAL OR SMALL BUILDING REQUIREMENTS OF PART 9, NBCC 2010, NBCC 2015

THIS DESIGN COMPLIES WITH:
- PART 9 OF OBC 2012, OBC 2018
- CSA 086-09, CSA 086-14
- TPIC 2011, TPIC 2014

DESIGN ASSUMPTIONS
-OVERHANG NOT TO BE ALTERED OR CUT OFF.

(55 % OF 23.0 P.S.F. G.S.L. PLUS 8.4 P.S.F. RAIN LOAD) EQUALS 21.0 P.S.F. SPECIFIED ROOF LIVE LOAD

ALLOWABLE DEFL.(LL)= L/360 (0.19")
CALCULATED VERT. DEFL.(LL) = L/ 999 (0.00")
ALLOWABLE DEFL.(TL)= L/360 (0.19")
CALCULATED VERT. DEFL.(TL) = L/ 999 (0.00")

CANTILEVER DEFLECTION:
ALLOWABLE DEFL.(LL)= L/120 (0.19")
CALCULATED VERT. DEFL.(LL) = L/ 999 (0.02")
ALLOWABLE DEFL.(TL)= L/120 (0.19")
CALCULATED VERT. DEFL.(TL) = L/ 544 (0.03")

CSI: TC=0.03/1.00 (A-B:1) , BC=0.16/1.00 (G-H:1) , WB=0.05/1.00 (C-E:1) , SSI=0.12/1.00 (H-I:1)

DOL LUMBER=1.00 NAIL=1.00 LS BEND=1.10 COMP=1.10 SHEAR=1.10 TENS= 1.10

COMPANION LIVE LOAD FACTOR = 1.00

TRUSS PLATE MANUFACTURER IS NOT RESPONSIBLE FOR QUALITY CONTROL IN THE TRUSS MANUFACTURING PLANT .

NAIL VALUES

PLATE	GRIP(DRY) (PSI) MAX	MIN	SHEAR (PLI) MAX	MIN	SECTION (PLI) MAX	MIN
MT20	618	354	1667	788	1987	1656

PLATE PLACEMENT TOL. = 0.250 inches

PLATE ROTATION TOL. = 5.0 Deg.

JSI GRIP= 0.13 (E) (INPUT = 0.90)
JSI METAL= 0.04 (G) (INPUT = 1.00)

A-18023293

JOB NAME	TRUSS NAME	QUANTITY	PLY	JOB DESC.	DRWG NO.
292588	J1TA	1	1	TRUSS DESC.	

Alpa Roof Truss, Maple

Version 8.200 S Jan 6 2018 MiTek Industries, Inc. Fri Feb 16 13:26:50 2018 Page 1
ID:84gOFYESM8s1JmDO6_uSGRyQWjP-TddzAAqS9j9dlX4Qb0uikFQx_INJSurUXYu30zzkZSJ

Scale = 1:26.2

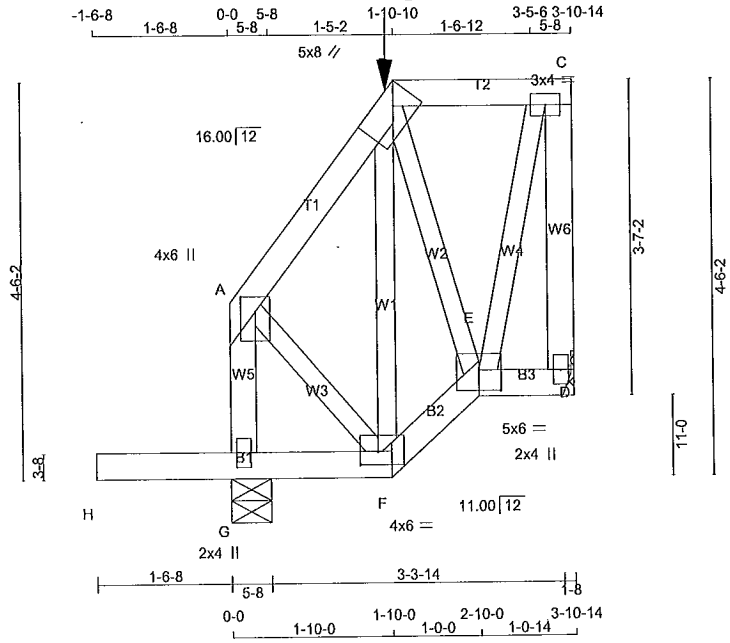

TOTAL WEIGHT = 28 lb

[M]

LUMBER

N. L. G. A. RULES

CHORDS	SIZE		LUMBER	DESCR.
A - B	2x4	DRY	No.2	SPF
B - C	2x4	DRY	No.2	SPF
D - C	2x4	DRY	No.2	SPF
G - A	2x4	DRY	No.2	SPF
H - F	2x4	DRY	No.2	SPF
F - E	2x4	DRY	No.2	SPF
E - D	2x4	DRY	No.2	SPF
ALL WEBS EXCEPT	2x3	DRY	No.2	SPF

DRY: SEASONED LUMBER.

PLATES (table is in inches)

JT	TYPE	PLATES	W	LEN	Y	X
A	TMVW+p	MT20	4.0	6.0	2.00	2.00
B	TTWW-h	MT20	5.0	8.0	Edge	2.75
C	TMVW-t	MT20	3.0	4.0		
D	BMV1+p	MT20	2.0	4.0		
E	BBWW-l	MT20	5.0	6.0	2.75	3.00
F	BBWW-l	MT20	4.0	6.0	1.75	2.50
G	BMV1+p	MT20	2.0	4.0		

Edge - INDICATES REFERENCE CORNER OF PLATE TOUCHES EDGE OF CHORD.

HANGERS NOTES

1) SPECIAL HANGER(S) OR CONNECTION(S) REQUIRED TO SUPPORT CONCENTRATED LOAD(S) 54.3 lbs FACTORED DOWN AT 1-10-10 ON TOP CHORD. DESIGN FOR UNSPECIFIED CONNECTION(S) IS DELEGATED TO THE BUILDING DESIGNER.

NOTE: Lateral brace(s) shown shall be 1x4 for Part 9 design as per OBC 9.23.13.11, and no less than 2x4 for Part 4 design

REGISTERED PROFESSIONAL ENGINEER
02/16/2018
EDWIN C. FOK
PROVINCE OF ONTARIO

DIMENSIONS, SUPPORTS AND LOADINGS SPECIFIED BY FABRICATOR TO BE VERIFIED BY BUILDING DESIGNER

BEARINGS

JT	FACTORED GROSS REACTION VERT	HORZ	MAXIMUM FACTORED GROSS REACTION DOWN	HORZ	UPLIFT	INPUT BRG	REQRD BRG
D	251	0	251	0	0	IN-SX	IN-SX
						HANGER BY OTHERS	
						MIN. SEAT SIZE: 1-8	
G	427	0	427	0	0	5-8	1-8

UNFACTORED REACTIONS

JT	1ST LCASE COMBINED	MAX./MIN. COMPONENT REACTIONS SNOW	LIVE	PERM.LIVE	WIND	DEAD	SOIL
D	178	110 / -13	0 / 0	0 / 0	0 / 0	68 / 0	0 / 0
G	305	184 / 0	0 / 0	0 / 0	0 / 0	121 / 0	0 / 0

BEARING MATERIAL TO BE SPF NO.2 OR BETTER AT JOINT(S) G

BRACING

TOP CHORD TO BE SHEATHED OR MAX. PURLIN SPACING = 6.25 FT.
MAX. UNBRACED BOTTOM CHORD LENGTH = 10.00 FT OR RIGID CEILING DIRECTLY APPLIED.

ALL PITCH BREAKS AND PERIMETER CORNER JOINTS MUST BE LATERALLY RESTRAINED.

LOADING

TOTAL LOAD CASES: (5)

CHORDS

MEMB. FR-TO	MAX. FACTORED FORCE (LBS)	FACTORED VERT. LOAD (PLF) FROM	TO	LC1 MAX CSI (LC)	MAX. UNBRAC LENGTH
A- B	-90 / 0	-78.0	-78.0	0.05 (1)	6.25
B- C	-41 / 0	-111.3	-111.3	0.08 (1)	6.25
D- C	-236 / 0	0.0	0.0	0.05 (1)	7.81
G- A	-192 / 0	0.0	0.0	0.02 (1)	7.81
H- G	0 / 0	-96.5	-96.5	0.17 (1)	10.00
G- F	0 / 0	-26.4	-26.4	0.17 (1)	10.00
F- E	0 / 74	-26.4	-26.4	0.02 (1)	10.00
E- D	0 / 0	-26.4	-26.4	0.01 (4)	10.00

WEBS

MEMB. FR-TO	MAX. FACTORED FORCE (LBS)	MAX CSI (LC)
F- B	-121 / 0	0.04 (1)
B- E	-49 / 8	0.01 (1)
E- C	0 / 132	0.03 (1)
A- F	0 / 70	0.02 (1)

FACTORED CONCENTRATED LOADS (LBS)

JT	LOC.	LC1	MAX-	MAX+	FACE	DIR.	TYPE
B	1-10-10	-54	-54	---	FRONT	VERT	TOTAL

CANTILEVER ANALYSIS HAS BEEN CONSIDERED IN THIS DESIGN

DESIGN CRITERIA

SPECIFIED LOADS:

TOP CH.	LL	=	21.0	PSF
	DL	=	6.0	PSF
BOT CH.	LL	=	0.0	PSF
	DL	=	7.4	PSF
TOTAL LOAD		=	34.4	PSF

SPACING = 24.0 IN. C/C

LOADING IN FLAT SECTION BASED ON A SLOPE OF 2.00/12 MINIMUM

GIRDER TYPE: CPrimeHip
LEFT SETBACK = 1-10-11
RIGHT SETBACK = 0-0
END SETBACK = 3-8-8
END WALL WIDTH = 0-0
CORNER FRAMING TYPE: CONVENTIONAL
END JACK TYPE: CONVENTIONAL
APPLIED TO FRONT SIDE
- ADDT'L LOADS BASED ON 55 % OF GSL.

THIS TRUSS IS DESIGNED FOR RESIDENTIAL OR SMALL BUILDING REQUIREMENTS OF PART 9, NBCC 2010, NBCC 2015

THIS DESIGN COMPLIES WITH:
- PART 9 OF OBC 2012, OBC 2018
- CSA 086-09, CSA 086-14
- TPIC 2011, TPIC 2014

DESIGN ASSUMPTIONS
-OVERHANG NOT TO BE ALTERED OR CUT OFF.

(55 % OF 23.0 P.S.F. G.S.L. PLUS 8.4 P.S.F. RAIN LOAD) EQUALS 21.0 P.S.F. SPECIFIED ROOF LIVE LOAD

ALLOWABLE DEFL.(LL)= L/360 (0.19")
CALCULATED VERT. DEFL.(LL) = L/ 999 (0.00")
ALLOWABLE DEFL.(TL)= L/360 (0.19")
CALCULATED VERT. DEFL.(TL) = L/ 999 (0.00")

CANTILEVER DEFLECTION:
ALLOWABLE DEFL.(LL)= L/120 (0.19")
CALCULATED VERT. DEFL.(LL) = L/ 999 (0.02")
ALLOWABLE DEFL.(TL)= L/120 (0.19")
CALCULATED VERT. DEFL.(TL) = L/ 555 (0.03")

CSI: TC=0.08/1.00 (B-C:1) , BC=0.17/1.00 (F-G:1) , WB=0.04/1.00 (B-F:1) , SSI=0.13/1.00 (G-H:1)

DOL LUMBER=1.00 NAIL=1.00 LS BEND=1.00 COMP=1.00 SHEAR=1.00 TENS= 1.00

COMPANION LIVE LOAD FACTOR = 1.00

TRUSS PLATE MANUFACTURER IS NOT RESPONSIBLE FOR QUALITY CONTROL IN THE TRUSS MANUFACTURING PLANT .

A-18023294

CONTINUED ON PAGE 2

JOB NAME	TRUSS NAME	QUANTITY	PLY	JOB DESC.	DRWG NO.
292588	J1TB	1	1	TRUSS DESC.	

Alpa Roof Truss, Maple

Version 8.200 S Jan 6 2018 MiTek Industries, Inc. Fri Feb 16 13:34:29 2018 Page 1
ID:84gOFYESM8s1JmDO6_uSGRyQWjP-XwsVW7ON3I_VJ3fezwdLr2xO1n1yVUE24TasdszkZL8

Scale = 1:34.9

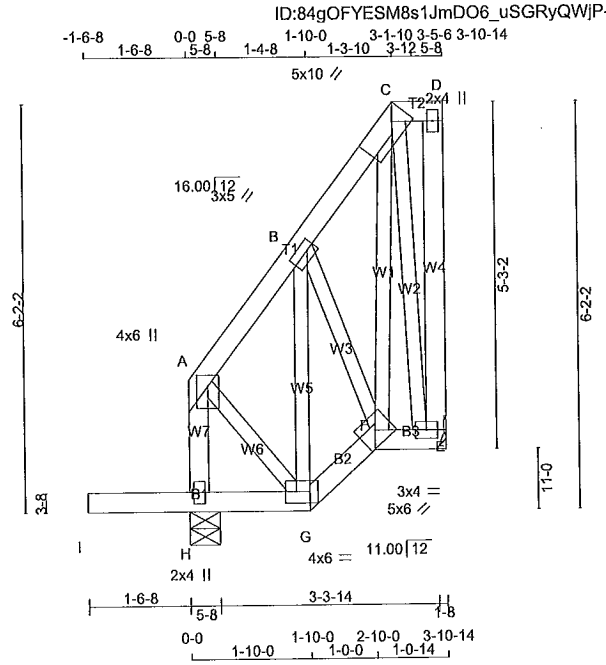

TOTAL WEIGHT = 36 lb

[M]

LUMBER

N. L. G. A. RULES

CHORDS	SIZE		LUMBER	DESCR.
A - C	2x4	DRY	No.2	SPF
C - D	2x4	DRY	No.2	SPF
E - D	2x4	DRY	No.2	SPF
H - A	2x4	DRY	No.2	SPF
I - G	2x4	DRY	No.2	SPF
G - F	2x4	DRY	No.2	SPF
F - E	2x4	DRY	No.2	SPF
ALL WEBS EXCEPT	2x3	DRY	No.2	SPF

DRY: SEASONED LUMBER.

PLATES (table is in inches)

JT	TYPE	PLATES	W	LEN	Y	X
A	TMVW+p	MT20	4.0	6.0	2.00	2.00
B	TMWW-t	MT20	3.0	5.0	1.50	1.50
C	TTWW-h	MT20	5.0	10.0	Edge	2.75
D	TMV+p	MT20	2.0	4.0		
E	BMVW1-t	MT20	3.0	4.0		
F	BBWW-h	MT20	5.0	6.0		
G	BBWW-l	MT20	4.0	6.0	2.00	4.50
H	BMV1+p	MT20	2.0	4.0		

Edge - INDICATES REFERENCE CORNER OF PLATE TOUCHES EDGE OF CHORD.

NOTE: Lateral brace(s) shown shall be 1x4 for Part 9 design as per OBC 9.23.13.11, and no less than 2x4 for Part 4 design

REGISTERED PROFESSIONAL ENGINEER
02/16/2018
EDWIN C. FOK
PROVINCE OF ONTARIO

DIMENSIONS, SUPPORTS AND LOADINGS SPECIFIED BY FABRICATOR TO BE VERIFIED BY BUILDING DESIGNER

BEARINGS

JT	FACTORED GROSS REACTION VERT	HORZ	MAXIMUM FACTORED GROSS REACTION DOWN	HORZ	UPLIFT	INPUT BRG IN-SX	REQRD BRG IN-SX
E	159	0	159	0	0	HANGER BY OTHERS MIN. SEAT SIZE: 1-8	
H	366	0	366	0	0	5-8	1-8

UNFACTORED REACTIONS

JT	1ST LCASE COMBINED	MAX./MIN. COMPONENT REACTIONS SNOW	LIVE	PERM.LIVE	WIND	DEAD	SOIL
E	113	69 / -13	0 / 0	0 / 0	0 / 0	44 / 0	0 / 0
H	261	159 / 0	0 / 0	0 / 0	0 / 0	102 / 0	0 / 0

BEARING MATERIAL TO BE SPF NO.2 OR BETTER AT JOINT(S) H

BRACING

TOP CHORD TO BE SHEATHED OR MAX. PURLIN SPACING = 6.25 FT.
MAX. UNBRACED BOTTOM CHORD LENGTH = 10.00 FT OR RIGID CEILING DIRECTLY APPLIED.

ALL PITCH BREAKS AND PERIMETER CORNER JOINTS MUST BE LATERALLY RESTRAINED.

LOADING

TOTAL LOAD CASES: (5)

CHORDS

MEMB. FR-TO	MAX. FACTORED FORCE (LBS)	FACTORED VERT. LOAD (PLF) FROM	TO	LC1 CSI (LC)	MAX. UNBRAC LENGTH
A- B	-53 / 6	-78.0	-78.0	0.03 (1)	6.25
B- C	-52 / 0	-78.0	-78.0	0.03 (1)	6.25
C- D	0 / 0	-78.0	-78.0	0.01 (1)	10.00
E- D	-30 / 0	0.0	0.0	0.01 (1)	7.81
H- A	-138 / 0	0.0	0.0	0.02 (1)	7.81
I- H	0 / 0	-96.5	-96.5	0.16 (1)	10.00
H- G	0 / 0	-18.5	-18.5	0.16 (1)	10.00
G- F	-5 / 48	-18.5	-18.5	0.01 (1)	10.00
F- E	0 / 19	-18.5	-18.5	0.01 (4)	10.00

WEBS

MEMB. FR-TO	MAX. FACTORED FORCE (LBS)	MAX CSI (LC)
G- B	-101 / 0	0.03 (1)
B- F	-32 / 13	0.01 (1)
F- C	-2 / 82	0.02 (1)
C- E	-121 / 0	0.05 (1)
A- G	-3 / 50	0.01 (1)

CANTILEVER ANALYSIS HAS BEEN CONSIDERED IN THIS DESIGN

DESIGN CRITERIA

SPECIFIED LOADS:

TOP CH.	LL	=	21.0	PSF
	DL	=	6.0	PSF
BOT CH.	LL	=	0.0	PSF
	DL	=	7.4	PSF
TOTAL LOAD		=	34.4	PSF

SPACING = 24.0 IN. C/C

LOADING IN FLAT SECTION BASED ON A SLOPE OF 2.00/12 MINIMUM

THIS TRUSS IS DESIGNED FOR RESIDENTIAL OR SMALL BUILDING REQUIREMENTS OF PART 9, NBCC 2010, NBCC 2015

THIS DESIGN COMPLIES WITH:
- PART 9 OF OBC 2012, OBC 2018
- CSA 086-09, CSA 086-14
- TPIC 2011, TPIC 2014

DESIGN ASSUMPTIONS
-OVERHANG NOT TO BE ALTERED OR CUT OFF.

(55 % OF 23.0 P.S.F. G.S.L. PLUS 8.4 P.S.F. RAIN LOAD) EQUALS 21.0 P.S.F. SPECIFIED ROOF LIVE LOAD

ALLOWABLE DEFL.(LL)= L/360 (0.19")
CALCULATED VERT. DEFL.(LL) = L/ 999 (0.00")
ALLOWABLE DEFL.(TL)= L/360 (0.19")
CALCULATED VERT. DEFL.(TL) = L/ 999 (0.00")

CANTILEVER DEFLECTION:
ALLOWABLE DEFL.(LL)= L/120 (0.19")
CALCULATED VERT. DEFL.(LL) = L/ 999 (0.02")
ALLOWABLE DEFL.(TL)= L/120 (0.19")
CALCULATED VERT. DEFL.(TL) = L/ 544 (0.03")

CSI: TC=0.03/1.00 (A-B:1) , BC=0.16/1.00 (G-H:1) , WB=0.05/1.00 (C-E:1) , SSI=0.12/1.00 (H-I:1)

DOL LUMBER=1.00 NAIL=1.00 LS BEND=1.10 COMP=1.10 SHEAR=1.10 TENS= 1.10

COMPANION LIVE LOAD FACTOR = 1.00

TRUSS PLATE MANUFACTURER IS NOT RESPONSIBLE FOR QUALITY CONTROL IN THE TRUSS MANUFACTURING PLANT .

NAIL VALUES

PLATE	GRIP(DRY) (PSI) MAX	MIN	SHEAR (PLI) MAX	MIN	SECTION (PLI) MAX	MIN
MT20	618	354	1667	788	1987	1656

PLATE PLACEMENT TOL. = 0.250 inches

PLATE ROTATION TOL. = 5.0 Deg.

JSI GRIP= 0.12 (E) (INPUT = 0.90)
JSI METAL= 0.04 (G) (INPUT = 1.00)

A-18023295

STRACON ENGINEERING INC.

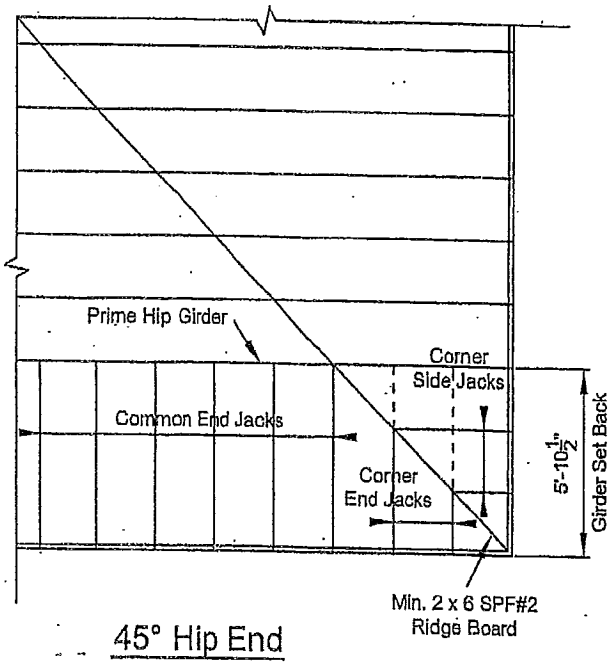

45° Hip End

LUMBER SPECIFICATION

TOP CHORD : 2 x 4 SPF#2
BOTTOM CHORD : 2 x 4 SPF#2
WEBS : 2 x 3 SPF#2
UNLESS OTHERWISE SHOWN

DESIGN LOAD

TOP CHORD SNOW LOAD	:	40.5 P.S.F.
TOP CHORD DEAD LOAD	:	3.0 P.S.F.
BOTTOM CHORD LIVE LOAD	:	0.0 P.S.F.
BOTTOM CHORD DEAD LOAD	:	7.0 P.S.F.
TOTAL LOAD	:	50.5 P.S.F

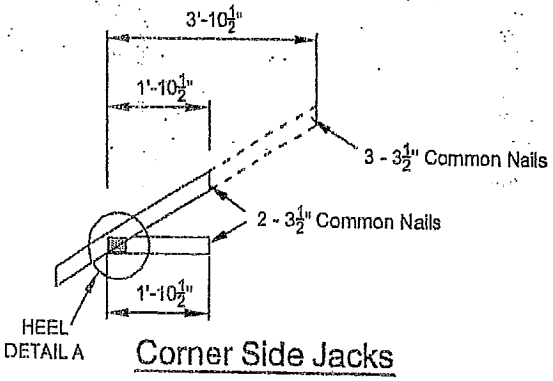

Corner Side Jacks

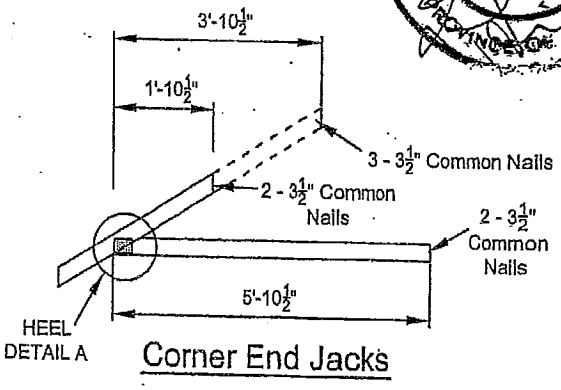

Corner End Jacks

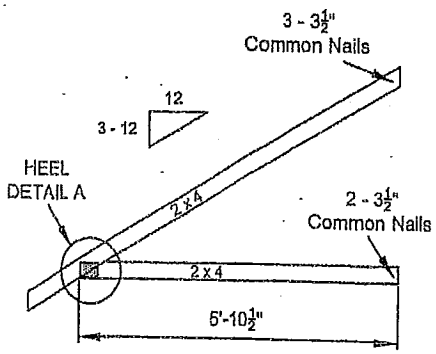

Common End Jacks

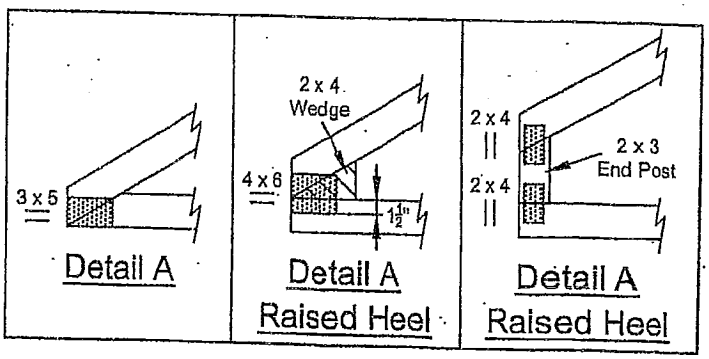

NOTE: DESIGN CONFORMS TO PART 9, O.B.C. 2012 (L.S.D. DESIGN)

CS-51008

LUS – Double Shear Joist Hangers

SIMPSON Strong-Tie®

All LUS hangers have double shear nailing. This patented innovation distributes the load through two points on each joist nail for greater strength. It also allows the use of fewer nails, faster installation and the use of common nails for all connections.

Material: 18 gauge

Finish: G90 galvanized

Design:

- Factored resistances are in accordance with CSA O86-14.
- Uplift resistances have been increased 15%. No further increase is permitted.
- Wood shear is not considered in the factored resistances given. The specifier must ensure that the joist and header capacities are capable of withstanding these loads.

Installation:

- Use all specified fasteners.
- Nails: 16d = 0.162" dia. x 3½" long common wire, 10d = 0.148" x 3" long common wire.
- Double shear nails must be driven at an angle through the joist or truss into the header to achieve the table loads.
- Not designed for welded or nailer applications.

Options:

- These hangers cannot be modified

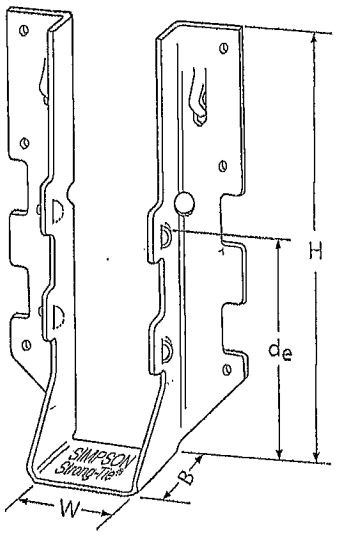

LUS28

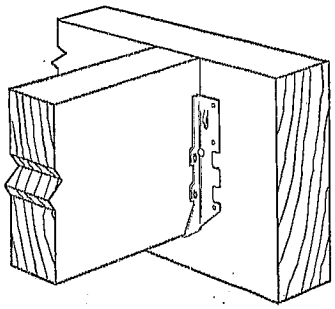

Typical LUS Installation

Model No.	Ga.	Dimensions (in.)				Fasteners		Factored Resistance (lb.)			
								D.Fir-L		S-P-F	
		W	H	B	d_e[1]	Face	Joist	Uplift (K_D=1.15)	Normal (K_D=1.00)	Uplift (K_D=1.15)	Normal (K_D=1.00)
LUS24	18	1 9/16	3 1/8	1 3/4	1 15/16	(4) 10d	(2) 10d	710	1630	645	1155
LUS24-2	18	3 1/8	3 1/8	2	1 13/16	(4) 16d	(2) 16d	835	2020	590	1435
LUS26	18	1 9/16	4 3/4	1 3/4	3 5/8	(4) 10d	(4) 10d	1420	2170	1290	1630
LUS26-2	18	3 1/8	4 7/8	2	4	(4) 16d	(4) 16d	1720	2595	1545	1920
LUS26-3	18	4 5/8	4 9/16	2	3 1/4	(4) 16d	(4) 16d	1720	2595	1545	2340
LUS28	18	1 9/16	6 5/8	1 3/4	3 3/4	(6) 10d	(6) 10d	1420	2520	1290	1790
LUS28-2	18	3 1/8	7	2	4	(6) 16d	(4) 16d	1720	3325	1545	2575
LUS28-3	18	4 5/8	6 1/4	2	3 1/4	(6) 16d	(4) 16d	1720	3325	1545	2375
LUS210	18	1 9/16	7 13/16	1 3/4	3 7/8	(8) 10d	(4) 10d	1420	2785	1290	2210
LUS210-2	18	3 1/8	9	2	6	(8) 16d	(6) 16d	2580	4500	2320	3195
LUS210-3	18	4 5/8	8 9/16	2	5 1/4	(8) 16d	(6) 16d	2580	3345	2320	2375

1. d_e is the distance from the seat of the hanger to the highest joist nail.

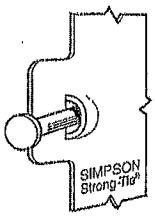

Dome Double Shear Nailing prevents tabs breaking off (available on some models).

U.S. Patent 5,603,580

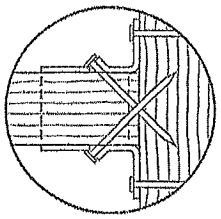

Double Shear Nailing Top View.

LICENSED PROFESSIONAL ENGINEER
4/5/2017
B. D. BUNTING
PROVINCE OF ONTARIO

LIMIT STATES DESIGN

This technical bulletin is effective until June 30, 2019, and reflects information available as of March 1, 2017. This information is updated periodically and should not be relied upon after June 30, 2019. Contact Simpson Strong-Tie for current information and limited warranty or see strongtie.com.

© 2017 Simpson Strong-Tie Company Inc.

(800) 999-5099
strongtie.com

TECHNICAL BULLETIN

HHUS – Double Shear Joist Hangers

SIMPSON Strong-Tie®

All HHUS hangers have double shear nailing. This patented innovation distributes the load through two points on each joist nail for greater strength. It also allows the use of fewer nails, faster installation and the use of common nails for all connections. Do not bend or remove tabs.

Material: 14 gauge

Finish: G90 galvanized

Design:

- Factored resistances are in accordance with CSA O86-14.
- Uplift resistances have been increased 15%. No further increase is permitted.
- Wood shear is not considered in the factored resistances given. The specifier must ensure that the joist and header capacities are capable of withstanding these loads.

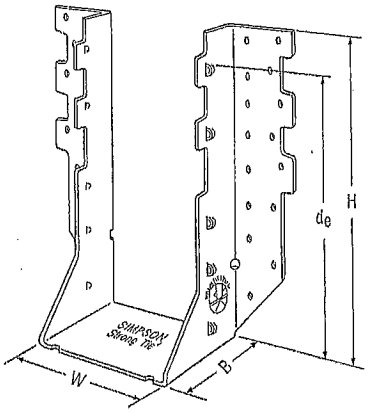

HHUS410

Installation:

- Use all specified fasteners
- Nails: 16d = 0.162" dia. x 3½" long common wire
- Double shear nails must be driven at an angle through the joist or truss into the header to achieve the table loads
- Not designed for welded or nailer applications

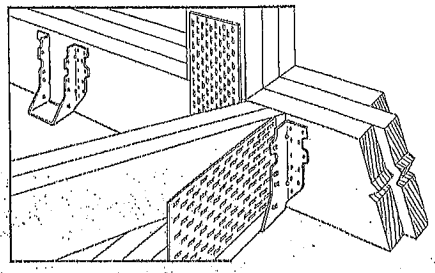

Typical HHUS Installation (Truss Designer to provide fastener quantity for connecting multiple members together)

Options:

- See current catalogue for options

Model No.	Ga.	Dimensions (in.)				Fasteners		Factored Resistance (lb.)			
								D.Fir-L		S-P-F	
		W	H	B	d_e[1]	Face	Joist	Uplift (K_D=1.15)	Normal (K_D=1.00)	Uplift (K_D=1.15)	Normal (K_D=1.00)
HHUS26-2	14	3 5/16	5 13/16	3	3 15/16	(14) 16d	(6) 16d	2850	7335	2065	5205
HHUS28-2	14	3 5/16	7 7/32	3	6 5/32	(22) 16d	(8) 16d	3765	8940	2675	6345
HHUS210-2	14	3 5/16	9 3/32	3	8	(30) 16d	(10) 16d	4745	9660	4310	7000
HHUS210-3	14	4 11/16	9	3	7 15/16	(30) 16d	(10) 16d	4745	10545	4310	7485
HHUS210-4	14	6 1/8	8 29/32	3	7 27/32	(30) 16d	(10) 16d	4745	10545	4310	7485
HHUS46	14	3 5/8	5 13/32	3	3 15/16	(14) 16d	(6) 16d	2540	7335	2065	5205
HHUS48	14	3 5/8	7 1/8	3	6 1/8	(22) 16d	(8) 16d	3765	8945	2267	6345
HHUS410	14	3 5/8	9	3	8	(30) 16d	(10) 16d	4745	9855	4310	7000
HHUS5.50/10	14	5 1/2	9	3	8	(30) 16d	(10) 16d	4745	10545	4310	7485
HHUS7.25/10	14	7 1/4	9	3 5/16	7 29/32	(30) 16d	(10) 16d	4745	10770	4310	7650

1. d_e is the distance from the seat of the hanger to the highest joist nail.

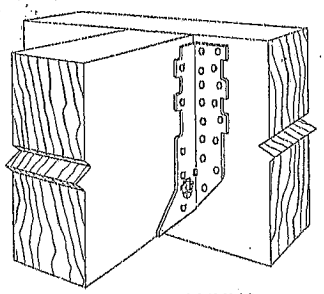

Typical HHUS Installation

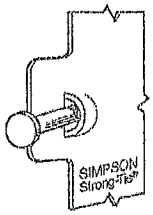

Dome Double Shear Nailing prevents tabs breaking off (available on some models).

U.S. Patent 5,603,580

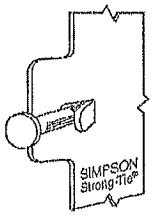

Double Shear Nailing Side View. Do not bend tab back.

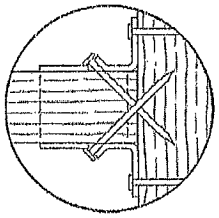

Double Shear Nailing Top View.

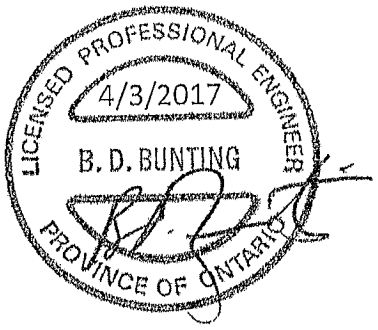

LIMIT STATES DESIGN

This technical bulletin is effective until June 30, 2019, and reflects information available as of March 1, 2017. This information is updated periodically and should not be relied upon after June 30, 2019. Contact Simpson Strong-Tie for current information and limited warranty or see strongtie.com.

© 2017 Simpson Strong-Tie Company Inc.

T-SPECHHUS17 3/17 exp. 6/19

(800) 999-5099
strongtie.com

HUS/LJS – Double Shear Joist Hangers

SIMPSON Strong-Tie®

All hangers have double shear nailing. This patented innovation distributes the load through two points on each joist nail for greater strength. It also allows the use of fewer nails, faster installation and the use of common nails for all connections. Do not bend or remove tabs.

Material: See table

Finish: G90 galvanized

Design:

- Factored resistances are in accordance with CSA O86-14.
- Uplift resistances have been increased 15%. No further increase is permitted.
- Wood shear is not considered in the factored resistances given. The specifier must ensure that the joist and header capacities are capable of withstanding these loads.

Installation:

- Use all specified fasteners
- Nails: 16d = 0.162" dia. x 3½" long common wire
- Double shear nails must be driven at an angle through the joist or truss into the header to achieve the table loads
- Not designed for welded or nailer applications

Options:

- See current catalogue for options

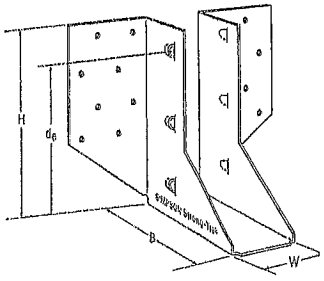

LJS26DS

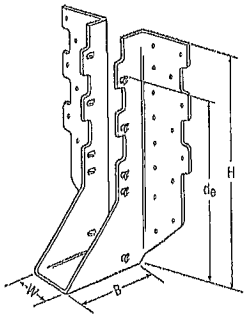

HUS210
(HUS26, HUS28, similar)

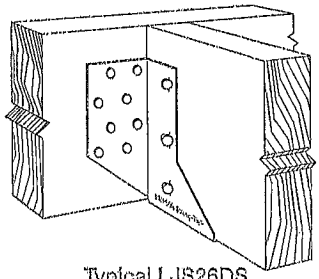

Typical LJS26DS Installation

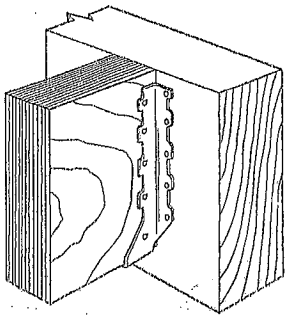

Typical HUS Installation

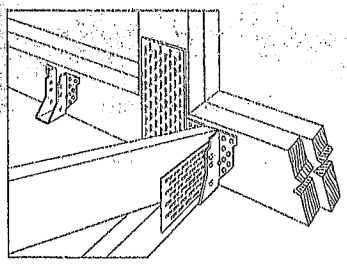

Typical HUS Installation
(Truss Designer to provide fastener quantity for connecting multiple members together)

Model No.	Ga.	Dimensions (in.)				Fasteners		Factored Resistance (lb.)			
								D.Fir-L		S-P-F	
		W	H	B	d_e[1]	Face	Joist	Uplift (K_D=1.15)	Normal (K_D=1.00)	Uplift (K_D=1.15)	Normal (K_D=1.00)
								lb.	lb.	lb.	lb.
LJS26DS	18	1 9/16	5	3½	4⅝	(16) 16d	(6) 16d	2055	4265	1460	4115
HUS26	16	1⅝	5⅝	3	3 15/16	(14) 16d	(6) 16d	2705	4940	2065	3875
HUS28	16	1⅝	7 3/32	3	6 9/32	(22) 16d	(8) 16d	3605	5365	2675	4345
HUS210	16	1⅝	9 9/32	3	7 31/32	(30) 16d	(10) 16d	4505	5795	4010	4740
HUS1.81/10	16	1 13/16	9	3	8	(30) 16d	(10) 16d	4505	6450	4010	5200

1. d_e is the distance from the seat of the hanger to the highest joist nail.

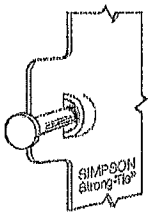

Dome Double Shear Nailing prevents tabs breaking off (available on some models).

U.S. Patent 5,603,580

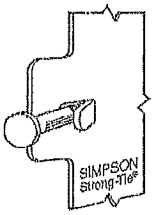

Double Shear Nailing Side View. Do not bend tab back.

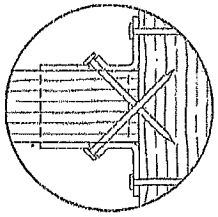

Double Shear Nailing Top View.

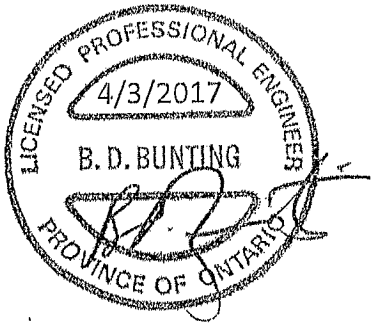

LIMIT STATES DESIGN

This technical bulletin is effective until June 30, 2019, and reflects information available as of March 1, 2017. This information is updated periodically and should not be relied upon after June 30, 2019. Contact Simpson Strong-Tie for current information and limited warranty or see strongtie.com.

© 2017 Simpson Strong-Tie Company Inc.

(800) 999-5099
strongtie.com

TECHNICAL BULLETIN

HGUS – Double Shear Joist Hangers

SIMPSON Strong-Tie®

All HGUS hangers have double shear nailing. This patented innovation distributes the load through two points on each joist nail for greater strength. It also allows the use of fewer nails, faster installation and the use of common nails for all connections. Do not bend or remove tabs.

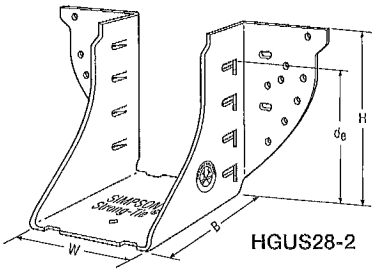

HGUS28-2

Material: 12 gauge

Finish: G90 galvanized

Design:

- Factored resistances are in accordance with CSA O86-14.
- Uplift resistances have been increased 15%. No further increase is permitted.
- Wood shear is not considered in the factored resistances given. The specifier must ensure that the joist and header capacities are capable of withstanding these loads.

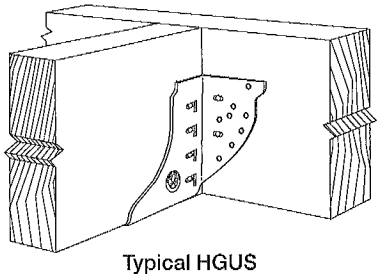
Typical HGUS Installation

Installation:

- Use all specified fasteners
- Nails: 16d = 0.162" dia x 3½" long common wire
- Double shear nails must be driven at an angle through the joist or truss into the header to achieve the table loads
- Not designed for welded or nailer applications

Options:

- See current catalogue for options

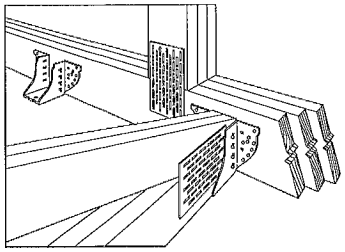
Typical HGUS Installation (Truss Designer to provide fastener quantity for connecting multiple members together)

Model No.	Ga.	Dimensions (in.)				Fasteners		Factored Resistance (lb.)			
								D.Fir-L		S-P-F	
		W	H	B	d_e[1]	Face	Joist	Uplift (K_D=1.15)	Normal (K_D=1.00)	Uplift (K_D=1.15)	Normal (K_D=1.00)
HGUS26	12	1⅝	5⅜	5	4 5/32	(20) 16d	(8) 16d	2685	6625	2685	5700
HGUS26-2	12	3 5/16	5 7/16	4	4⅛	(20) 16d	(8) 16d	4385	8950	3100	6355
HGUS26-3	12	4 15/16	5½	4	4⅛	(20) 16d	(8) 16d	4385	8950	3100	6355
HGUS26-4	12	6 9/16	5 7/16	4	4⅛	(20) 16d	(8) 16d	4385	8950	3100	6355
HGUS28	12	1⅝	7⅛	5	6⅛	(36) 16d	(12) 16d	3310	7675	3100	6900
HGUS28-2	12	3 5/16	7 3/16	4	6⅛	(36) 16d	(12) 16d	6070	12980	4310	9215
HGUS28-3	12	4 15/16	7¼	4	6⅜	(36) 16d	(12) 16d	6070	12980	4310	9215
HGUS28-4	12	6 9/16	7 3/16	4	6⅛	(36) 16d	(12) 16d	6070	12980	4310	9215
HGUS210-2	12	3 5/16	9 3/16	4	8⅛	(46) 16d	(16) 16d	6840	14645	4855	10400
HGUS210-3	12	4 15/16	9¼	4	8⅜	(46) 16d	(16) 16d	6840	14645	4855	10400
HGUS210-4	12	6 9/16	9 3/16	4	8⅛	(46) 16d	(16) 16d	6840	14645	4855	10400
HGUS212-4	12	6 9/16	10⅝	4	10⅛	(56) 16d	(20) 16d	7640	14995	5425	10645
HGUS214-4	12	6 9/16	12⅝	4	11⅛	(66) 16d	(22) 16d	10130	16400	7195	11645

1. d_e is the distance from the seat of the hanger to the highest joist nail.

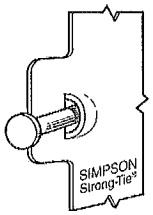

Dome Double Shear Nailing prevents tabs breaking off (available on some models).

U.S. Patent 5,603,580

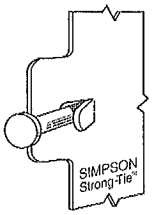

Double Shear Nailing Side View. Do not bend tab back.

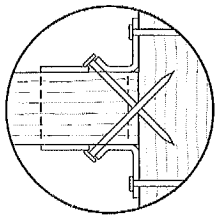
Double Shear Nailing Top View.

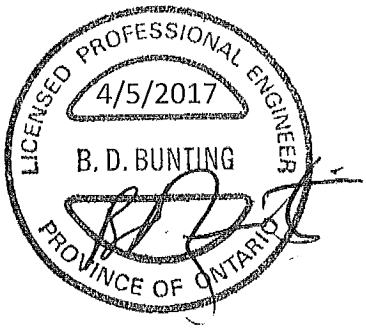

LIMIT STATES DESIGN

This technical bulletin is effective until June 30, 2019, and reflects information available as of March 1, 2017. This information is updated periodically and should not be relied upon after June 30, 2019. Contact Simpson Strong-Tie for current information and limited warranty or see strongtie.com.

© 2017 Simpson Strong-Tie Company Inc.

T-SPECHGUS17 3/17 exp. 6/19

(800) 999-5099
strongtie.com