ALPA-BARRIE

ALL CONV. FRAMING TO CONFORM WITH PART 9 OF O.B.C. (Latest Edition) ROOF RAFTERS THAT CROSS MEET OVER TRUSSES TO BE 2X4 SPF #2 24"O.C. WITH A VERT.POST TO THE TRUSS UNDERNEATH AT EACH CROSS PT. VERT. POST LONGER THAN 6' TO HAVE LATERAL BRACING SO THAT THE DIST. BETWEEN END PT. & BETWEEN ROWS OF BRACING DOES NOT EXCEED 6'

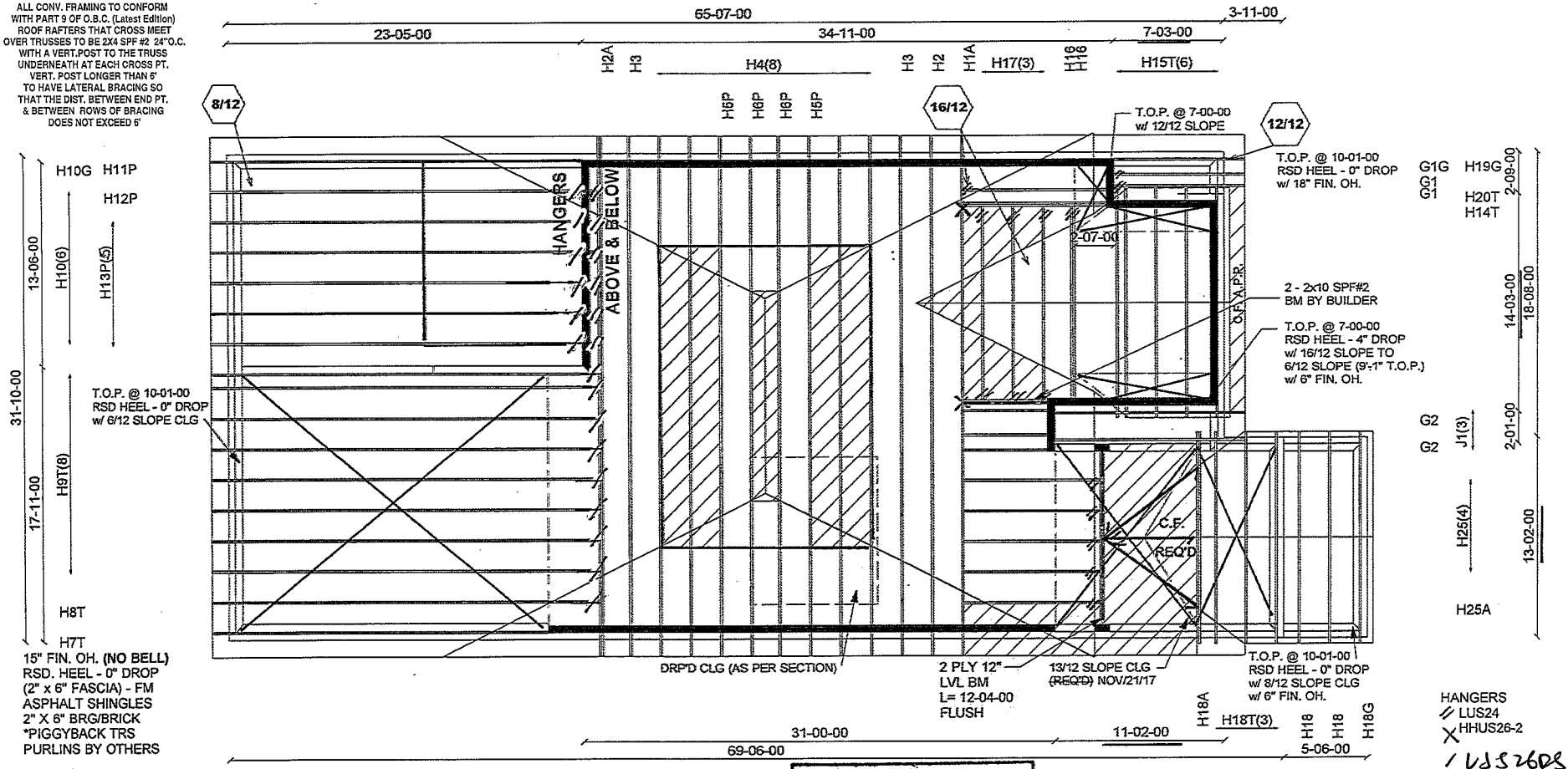

LOFT WALLS SUPPORTED BY OTHERS

OFFICE USE ONLY
ENGINEERED FROM
A-18023042 TO
A-18023071

BRIARWOOD

Job Track: 45147	Builder / Location: GOLD PARK HOMES / VAUGHAN		Model / Elevation: 4000 REV1 / A
Layout ID: 292566	Project: PINE VALLEY	THESE DRAWINGS CONSTITUTE THE PROPERTY OF ALPA ROOF TRUSSES INC., SHALL NOT BE REPRODUCED, PUBLISHED, OR REDISTRIBUTED IN ANY MANNER OR UTILIZED FOR ANY PURPOSE OTHER THAN THE MANUFACTURE OF TRUSSES BY ALPA ROOF TRUSSES INC AND WILL BE RETRACTED BY ALPA ROOF TRUSSES INC IF UTLILZED FOR ANY OTHER PURPOSE.	
Plan Log: 95914	Date: 1/16/2018	Designer: AMANDA	

ALPA-BARRIE

ALL CONV. FRAMING TO CONFORM WITH PART 9 OF O.B.C. (Latest Edition) ROOF RAFTERS THAT CROSS MEET OVER TRUSSES TO BE 2X4 SPF #2 24"C WITH A VERT.POST TO THE TRUSS UNDERNEATH AT EACH CROSS PT. VERT. POST LONGER THAN 6' TO HAVE LATERAL BRACING SO THAT THE DIST. BETWEEN END PT. & BETWEEN ROWS OF BRACING DOES NOT EXCEED 6'

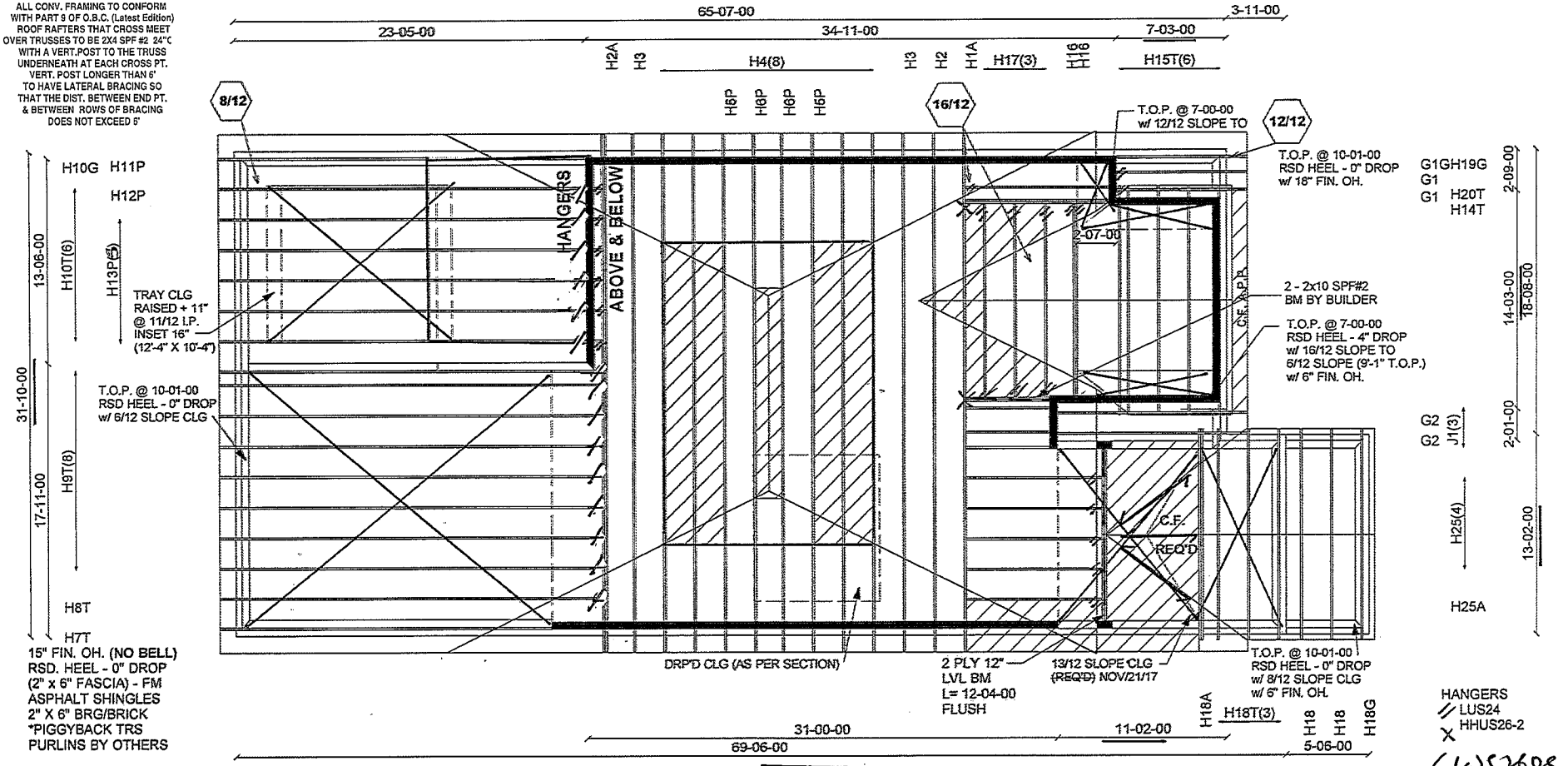

LOFT WALLS SUPPORTED BY OTHERS

OFFICE USE ONLY
ENGINEERED FROM
A- 18023042 TO
A- 18023072

BRIARWOOD

CONVENTIONAL FRAMING BY OTHERS

Job Track: 45147	Builder / Location: GOLD PARK HOMES / VAUGHAN	Model / Elevation: 4000 REV1 / A OPT TRAY	
Layout ID: 292567	Project: PINE VALLEY	THESE DRAWINGS CONSTITUTE THE PROPERTY OF ALPA ROOF TRUSSES INC., SHALL NOT BE REPRODUCED, PUBLISHED, OR REDISTRIBUTED IN ANY MANNER OR UTILIZED FOR ANY PURPOSE OTHER THAN THE MANUFACTURE OF TRUSSES BY ALPA ROOF TRUSSES INC AND WILL BE RETRACTED BY ALPA ROOF TRUSSES INC IF UTLILZED FOR ANY OTHER PURPOSE.	
Plan Log: 95914	Date: 1/16/2018 Designer: AMANDA		

Stracon Engineering Inc.

69 Graydon Crescent
Richmond Hill, Ontario
L4B 3W7
(905) 832-2250 Fax (905) 832-0286

REGISTERED PROFESSIONAL ENGINEER
E. FOK
PROVINCE OF ONTARIO

RESPONSIBILITIES

1. Stracon Engineering Inc. is responsible for the design of trusses as individual components.
2. It is the responsibility of others to ascertain that the design loads utilized on this drawing meet or exceed the actual dead load imposed by the structure and the live load imposed by the local building code or the authorities with jurisdictions.
3. All dimensions are to be verified by owner contractor, architect or other authority before manufacture.
4. Stracon Engineering Inc. bears no responsibility for the erection of the trusses. Persons erecting trusses are cautioned to seek professional advice regarding temporary and permanent bracing system. Bracing shown on Stracon Engineering Inc. drawings is specified for the truss as a component only and forms an integral part of the truss design.
5. It is the truss manufacture's responsibility to ensure that trusses are manufactured in conformance with Stracon Engineering Inc. specifications outlined below.

SPECIFICATIONS

1. Trusses designed by Stracon Engineering Inc. conforms to the relevant section of the Ontario Building Code of Canada (Part 9 or Part 4) or to the Canadian code for farm buildings, whichever applies to the building type indicated on the drawings as well as to the procedures established by the truss plate institute of Canada. Unit stresses used are as per CSA-086-09.
2. Lumber is to be the sizes and grade specified.
3. Moisture content of lumber is not to exceed 19% in service unless otherwise specified.
4. Lumber not to be treated with chemicals unless otherwise specified.
5. Plates shall be applied to both faces of the truss at each joint and shall be positioned as specified.
6. The top chord is assumed to be continuously laterally braced by the roof sheathing or purlins at intervals not exceeding 12.5 times in thickness.
7. Where not rigid ceiling is attached directly to the bottom chord, laterally brace the chords at intervals not exceeding 3M (10') o.c.

January 15, 2014

JOB NAME	TRUSS NAME	QUANTITY	PLY	JOB DESC.	DRWG NO.
292566	G1	2	1	TRUSS DESC.	

Alpa Roof Truss, Maple

Version 8.200 S Jan 6 2018 MiTek Industries, Inc. Thu Feb 15 08:07:00 2018 Page 1
ID:84gOFYESM8s1JmDO6_uSGRyQWjP-6rTb9I_ZlBxc0cys?EYSESCJInckXrUZ9q_j_7zkzE9

Scale = 1:52.6

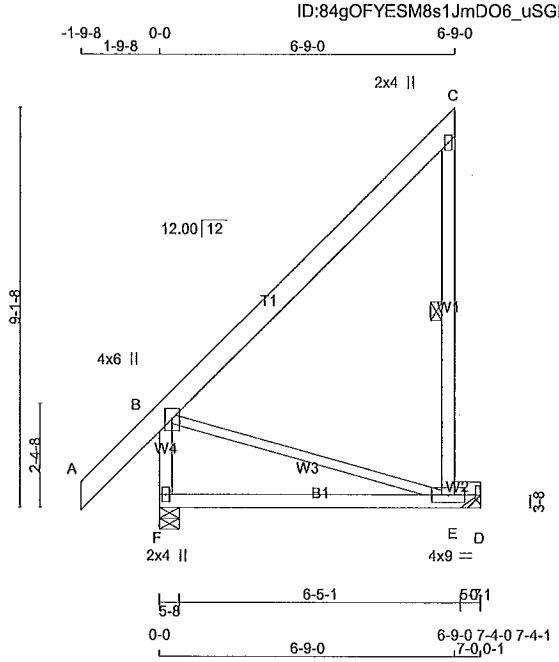

TOTAL WEIGHT = 2 X 48 = 96 lb

LUMBER
N. L. G. A. RULES

CHORDS	SIZE		LUMBER	DESCR.
A - C	2x6	DRY	No.2	SPF
E - C	2x4	DRY	No.2	SPF
F - B	2x4	DRY	No.2	SPF
F - D	2x4	DRY	No.2	SPF
E - D	2x4	DRY	No.2	SPF
ALL WEBS	2x3	DRY	No.2	SPF

DRY: SEASONED LUMBER.

PLATES (table is in Inches)

JT	TYPE	PLATES	W	LEN	Y	X
B	TMVW+p	MT20	4.0	6.0	2.75	2.00
C	TMV+p	MT20	2.0	4.0		
E	BMVWW-t	MT20	4.0	9.0		
F	BMV1+p	MT20	2.0	4.0		

NOTE: Lateral brace(s) shown shall be 1x4 for Part 9 design as per OBC 9.23.13.11, and no less than 2x4 for Part 4 design

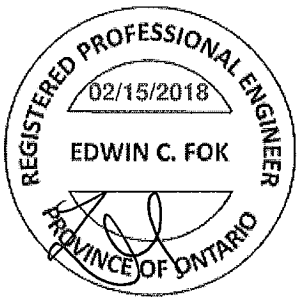

DIMENSIONS, SUPPORTS AND LOADINGS SPECIFIED BY FABRICATOR TO BE VERIFIED BY BUILDING DESIGNER

BEARINGS

JT	FACTORED GROSS REACTION VERT	HORZ	MAXIMUM FACTORED GROSS REACTION DOWN	HORZ	UPLIFT	INPUT BRG IN-SX	REQRD BRG IN-SX
F	504	0	504	0	0	5-8	1-8
D	310	0	310	0	0	HANGER BY OTHERS MIN. SEAT SIZE: 1-8	

VALUE IN PARENTHESIS INDICATES EFFECTIVE BEARING LENGTH

UNFACTORED REACTIONS

MAX./MIN. COMPONENT REACTIONS

JT	1ST LCASE COMBINED	SNOW	LIVE	PERM.LIVE	WIND	DEAD	SOIL
F	357	235 / 0	0 / 0	0 / 0	0 / 0	122 / 0	0 / 0
D	222	130 / 0	0 / 0	0 / 0	0 / 0	92 / 0	0 / 0

BEARING MATERIAL TO BE SPF NO.2 OR BETTER AT JOINT(S) F

BRACING

TOP CHORD TO BE SHEATHED OR MAX. PURLIN SPACING = 10.00 FT.
MAX. UNBRACED BOTTOM CHORD LENGTH = 10.00 FT OR RIGID CEILING DIRECTLY APPLIED.

ALL PITCH BREAKS AND PERIMETER CORNER JOINTS MUST BE LATERALLY RESTRAINED.

1 LATERAL BRACE(S) AT 1/ 2 LENGTH OF C-E.

END VERTICAL(S) MUST BE SHEATHED OR HAVE BRACES AS INDICATED IN THE MAX. UNBRACED LENGTH COLUMN OF THE TABLE BELOW

LOADING

TOTAL LOAD CASES: (4)

CHORDS

MEMB. FR-TO	MAX. FACTORED FORCE (LBS)	FACTORED VERT. LOAD LC1 (PLF) FROM	TO	MAX CSI (LC)	MAX. UNBRAC LENGTH
A- B	0 / 54	-78.0	-78.0	0.11 (1)	10.00
B- C	0 / 0	-78.0	-78.0	0.30 (1)	10.00
E- C	-263 / 0	0.0	0.0	0.09 (1)	6.25
F- B	-415 / 0	0.0	0.0	0.05 (1)	7.81
F- E	0 / 0	-18.5	-18.5	0.33 (4)	10.00
E- D	0 / 0	-18.5	-18.5	0.10 (1)	10.00

WEBS

MEMB. FR-TO	MAX. FACTORED FORCE (LBS)	MAX CSI (LC)
B- E	0 / 0	0.00 (1)

DESIGN CRITERIA

SPECIFIED LOADS:

TOP CH.	LL	=	21.0	PSF
	DL	=	6.0	PSF
BOT CH.	LL	=	0.0	PSF
	DL	=	7.4	PSF
TOTAL LOAD		=	34.4	PSF

SPACING = 24.0 IN. C/C

THIS TRUSS IS DESIGNED FOR RESIDENTIAL OR SMALL BUILDING REQUIREMENTS OF PART 9, NBCC 2010, NBCC 2015

THIS DESIGN COMPLIES WITH:
- PART 9 OF OBC 2012, OBC 2018
- CSA 086-09, CSA 086-14
- TPIC 2011, TPIC 2014

(55 % OF 23.0 P.S.F. G.S.L. PLUS 8.4 P.S.F. RAIN LOAD) EQUALS 21.0 P.S.F. SPECIFIED ROOF LIVE LOAD

ALLOWABLE DEFL.(LL)= L/360 (0.24")
CALCULATED VERT. DEFL.(LL) = L/ 999 (0.07")
ALLOWABLE DEFL.(TL)= L/360 (0.24")
CALCULATED VERT. DEFL.(TL) = L/ 374 (0.24")

CSI: TC=0.30/1.00 (B-C:1) , BC=0.33/1.00 (E-F:4) , WB=0.00/1.00 (B-E:1) , SSI=0.12/1.00 (D-E:1)

DOL LUMBER=1.00 NAIL=1.00 LS BEND=1.10 COMP=1.10 SHEAR=1.10 TENS= 1.10

COMPANION LIVE LOAD FACTOR = 1.00

TRUSS PLATE MANUFACTURER IS NOT RESPONSIBLE FOR QUALITY CONTROL IN THE TRUSS MANUFACTURING PLANT .

NAIL VALUES

PLATE	GRIP(DRY) (PSI) MAX	MIN	SHEAR (PLI) MAX	MIN	SECTION (PLI) MAX	MIN
MT20	618	354	1667	788	1987	1656

PLATE PLACEMENT TOL. = 0.250 inches

PLATE ROTATION TOL. = 5.0 Deg.

JSI GRIP= 0.49 (E) (INPUT = 0.90)
JSI METAL= 0.20 (E) (INPUT = 1.00)

A-18023042

JOB NAME	TRUSS NAME	QUANTITY	PLY	JOB DESC.	DRWG NO.
292566	G1G	1	1	TRUSS DESC.	

Alpa Roof Truss, Maple

Version 8.200 S Jan 6 2018 MiTek Industries, Inc. Thu Feb 15 08:07:06 2018 Page 1

ID:84gOFYESM8s1JmDO6_uSGRyQWjP-x?qsPL3JK1hmkXP0LUfsUjSMnCkixXeRXmR1CnzkzE3

Scale = 1:57.0

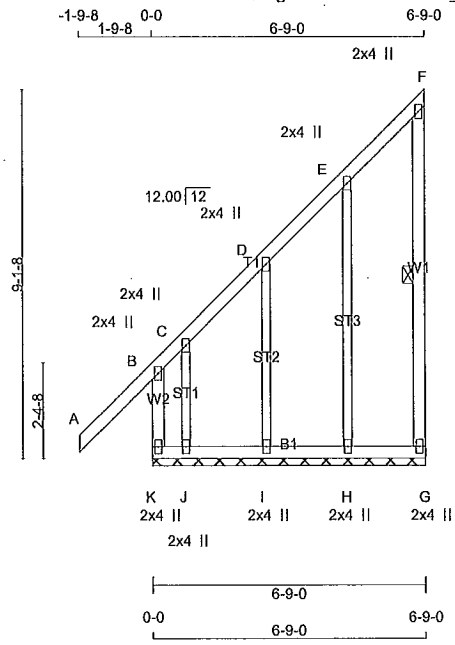

TOTAL WEIGHT = 45 lb

LUMBER

N. L. G. A. RULES

CHORDS	SIZE		LUMBER	DESCR.
K - B	2x4	DRY	No.2	SPF
A - F	2x4	DRY	No.2	SPF
G - F	2x4	DRY	No.2	SPF
K - G	2x4	DRY	No.2	SPF
ALL WEBS	2x3	DRY	No.2	SPF
ALL GABLE WEBS	2x3	DRY	No.2	SPF

DRY: SEASONED LUMBER.

GABLE STUDS SPACED AT 2-0-0 OC.

PLATES (table is in inches)

JT	TYPE	PLATES	W	LEN	Y	X
B	TMV+p	MT20	2.0	4.0		
C, D, E						
C	TMW+w	MT20	2.0	4.0		
F	TMV+p	MT20	2.0	4.0		
G	BMV1+p	MT20	2.0	4.0		
H, I, J						
H	BMW1+w	MT20	2.0	4.0		
K	BMV1+p	MT20	2.0	4.0		

NOTE: Lateral brace(s) shown shall be 1x4 for Part 9 design as per OBC 9.23.13.11, and no less than 2x4 for Part 4 design

REGISTERED PROFESSIONAL ENGINEER
02/15/2018
EDWIN C. FOK
PROVINCE OF ONTARIO

DIMENSIONS, SUPPORTS AND LOADINGS SPECIFIED BY FABRICATOR TO BE VERIFIED BY BUILDING DESIGNER

BEARINGS

THIS TRUSS DESIGNED FOR CONTINUOUS BEARINGS.

THIS TRUSS REQUIRES RIGID SHEATHING ON EXPOSED FACE.

PROVIDE ANCHORAGE AT BEARING JOINT J FOR 150 LBS FACTORED UPLIFT
BEARING MATERIAL TO BE SPF NO.2 OR BETTER AT JOINT(S)

BRACING

TOP CHORD TO BE SHEATHED OR MAX. PURLIN SPACING = 6.25 FT.
MAX. UNBRACED BOTTOM CHORD LENGTH = 10.00 FT OR RIGID CEILING DIRECTLY APPLIED.

ALL PITCH BREAKS AND PERIMETER CORNER JOINTS MUST BE LATERALLY RESTRAINED.

1 LATERAL BRACE(S) AT 1/ 2 LENGTH OF F-G.

END VERTICAL(S) MUST BE SHEATHED OR HAVE BRACES AS INDICATED IN THE MAX. UNBRACED LENGTH COLUMN OF THE TABLE BELOW

LOADING

TOTAL LOAD CASES: (4)

CHORDS

MEMB. FR-TO	MAX. FORCE (LBS)	FACTORED VERT. LOAD (PLF) FROM	TO	LC1 MAX CSI (LC)	MAX. UNBRAC LENGTH
K- B	-336 / 0	0.0	0.0	0.04 (1)	7.81
A- B	0 / 52	-78.0	-78.0	0.20 (1)	10.00
B- C	-116 / 0	-78.0	-78.0	0.17 (1)	6.25
C- D	-4 / 0	-78.0	-78.0	0.04 (1)	10.00
D- E	-5 / 0	-78.0	-78.0	0.04 (1)	10.00
E- F	-9 / 0	-78.0	-78.0	0.04 (1)	10.00
G- F	-67 / 0	0.0	0.0	0.01 (1)	6.25
K- J	0 / 5	-18.5	-18.5	0.04 (1)	10.00
J- I	0 / 7	-18.5	-18.5	0.02 (4)	10.00
I- H	0 / 3	-18.5	-18.5	0.02 (4)	10.00
H- G	0 / 0	-18.5	-18.5	0.02 (4)	10.00

WEBS

MEMB. FR-TO	MAX. FORCE (LBS)	MAX CSI (LC)
H- E	-165 / 0	0.15 (1)
I- D	-161 / 0	0.06 (1)
J- C	0 / 55	0.01 (1)

DESIGN CRITERIA

SPECIFIED LOADS:

TOP CH.	LL	=	21.0	PSF
	DL	=	6.0	PSF
BOT CH.	LL	=	0.0	PSF
	DL	=	7.4	PSF
TOTAL LOAD		=	34.4	PSF

SPACING = 24.0 IN. C/C

THIS TRUSS IS DESIGNED FOR RESIDENTIAL OR SMALL BUILDING REQUIREMENTS OF PART 9, NBCC 2010, NBCC 2015

THIS DESIGN COMPLIES WITH:
- PART 9 OF OBC 2012, OBC 2018
- CSA 086-09, CSA 086-14
- TPIC 2011, TPIC 2014

DESIGN ASSUMPTIONS
-OVERHANG NOT TO BE ALTERED OR CUT OFF.

(55 % OF 23.0 P.S.F. G.S.L. PLUS 8.4 P.S.F. RAIN LOAD) EQUALS 21.0 P.S.F. SPECIFIED ROOF LIVE LOAD

CSI: TC=0.20/1.00 (A-B:1) , BC=0.04/1.00 (J-K:1) , WB=0.15/1.00 (E-H:1) , SSI=0.10/1.00 (B-C:1)

DOL LUMBER=1.00 NAIL=1.00 LS BEND=1.10 COMP=1.10 SHEAR=1.10 TENS= 1.10

COMPANION LIVE LOAD FACTOR = 1.00

TRUSS PLATE MANUFACTURER IS NOT RESPONSIBLE FOR QUALITY CONTROL IN THE TRUSS MANUFACTURING PLANT .

NAIL VALUES

PLATE	GRIP(DRY) (PSI) MAX	MIN	SHEAR (PLI) MAX	MIN	SECTION (PLI) MAX	MIN
MT20	618	354	1667	788	1987	1656

PLATE PLACEMENT TOL. = 0.250 Inches

PLATE ROTATION TOL. = 5.0 Deg.

JSI GRIP= 0.27 (B) (INPUT = 0.90)
JSI METAL= 0.18 (B) (INPUT = 1.00)

A-18023043

JOB NAME	TRUSS NAME	QUANTITY	PLY	JOB DESC.	DRWG NO.
292566	G2	2	1	TRUSS DESC.	

Alpa Roof Truss, Maple

Version 8.200 S Jan 6 2018 MiTek Industries, Inc. Thu Feb 15 08:07:14 2018 Page 1
ID:84gOFYESM8s1JmDO6_uSGRyQWjP-lXJu549LSUidhm0ZpAokpPojURNdp3sdN0NSTJzkzDx

Scale = 1:68.2

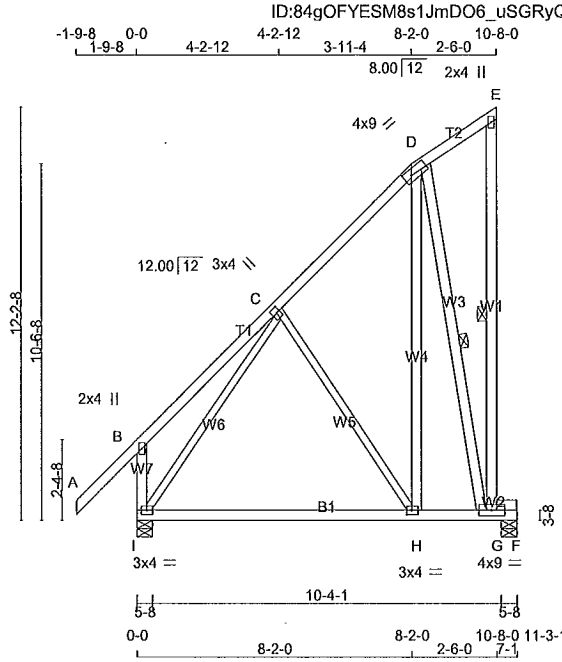

TOTAL WEIGHT = 2 X 84 = 168 lb

[M]

LUMBER

N. L. G. A. RULES

CHORDS	SIZE		LUMBER	DESCR.
A - D	2x4	DRY	No.2	SPF
D - E	2x4	DRY	No.2	SPF
G - E	2x4	DRY	No.2	SPF
I - B	2x4	DRY	No.2	SPF
I - F	2x4	DRY	No.2	SPF
G - F	2x4	DRY	No.2	SPF
ALL WEBS	2x4	DRY	No.2	SPF
EXCEPT				
I - C	2x3	DRY	No.2	SPF
C - H	2x3	DRY	No.2	SPF

DRY: SEASONED LUMBER.

PLATES (table is in inches)

JT	TYPE	PLATES	W	LEN	Y	X
B	TMV+p	MT20	2.0	4.0		
C	TMWW+t	MT20	3.0	4.0	2.00	1.25
D	TTWW-m	MT20	4.0	9.0	2.00	2.75
E	TMV+p	MT20	2.0	4.0		
G	BMVWW-t	MT20	4.0	9.0		
H	BMWW-t	MT20	3.0	4.0	1.50	1.75
I	BMVW1-t	MT20	3.0	4.0		

NOTE: Lateral brace(s) shown shall be 1x4 for Part 9 design as per OBC 9.23.13.11, and no less than 2x4 for Part 4 design

REGISTERED PROFESSIONAL ENGINEER
02/15/2018
EDWIN C. FOK
PROVINCE OF ONTARIO

DIMENSIONS, SUPPORTS AND LOADINGS SPECIFIED BY FABRICATOR TO BE VERIFIED BY BUILDING DESIGNER

BEARINGS

JT	FACTORED GROSS REACTION VERT	HORZ	MAXIMUM FACTORED GROSS REACTION DOWN	HORZ	UPLIFT	INPUT BRG IN-SX	REQRD BRG IN-SX
F	498	0	498	0	0	5-8 (5-7)	1-8
I	689	0	689	0	0	5-8	1-8

VALUE IN PARENTHESIS INDICATES EFFECTIVE BEARING LENGTH

UNFACTORED REACTIONS

JT	1ST LCASE COMBINED	MAX./MIN. COMPONENT REACTIONS SNOW	LIVE	PERM.LIVE	WIND	DEAD	SOIL
F	356	212 / 0	0 / 0	0 / 0	0 / 0	144 / 0	0 / 0
I	489	315 / 0	0 / 0	0 / 0	0 / 0	173 / 0	0 / 0

BEARING MATERIAL TO BE SPF NO.2 OR BETTER AT JOINT(S) F, I

BRACING

TOP CHORD TO BE SHEATHED OR MAX. PURLIN SPACING = 6.25 FT.
MAX. UNBRACED BOTTOM CHORD LENGTH = 10.00 FT OR RIGID CEILING DIRECTLY APPLIED.

ALL PITCH BREAKS AND PERIMETER CORNER JOINTS MUST BE LATERALLY RESTRAINED.

1 LATERAL BRACE(S) AT 1/ 2 LENGTH OF E-G, D-G.

END VERTICAL(S) MUST BE SHEATHED OR HAVE BRACES AS INDICATED IN THE MAX. UNBRACED LENGTH COLUMN OF THE TABLE BELOW

LOADING

TOTAL LOAD CASES: (4)

CHORDS

MEMB. FR-TO	MAX. FACTORED FORCE (LBS)	VERT. LOAD LC1 (PLF) FROM	TO	MAX CSI (LC)	MAX. UNBRAC LENGTH
A- B	0 / 52	-78.0	-78.0	0.20 (1)	10.00
B- C	0 / 27	-78.0	-78.0	0.22 (1)	10.00
C- D	-210 / 0	-78.0	-78.0	0.22 (1)	6.25
D- E	0 / 0	-78.0	-78.0	0.08 (1)	10.00
G- E	-97 / 0	0.0	0.0	0.08 (1)	6.25
I- B	-269 / 0	0.0	0.0	0.03 (1)	7.81
I- H	0 / 242	-18.5	-18.5	0.33 (4)	10.00
H- G	0 / 136	-18.5	-18.5	0.42 (1)	10.00
G- F	0 / 0	-18.5	-18.5	0.16 (1)	10.00

WEBS

MEMB. FR-TO	MAX. FACTORED FORCE (LBS)	MAX CSI (LC)
H- D	0 / 465	0.07 (1)
D- G	-570 / 0	0.35 (1)
I- C	-435 / 0	0.45 (1)
C- H	-198 / 0	0.22 (1)

DESIGN CRITERIA

SPECIFIED LOADS:

TOP CH.	LL	=	21.0	PSF
	DL	=	6.0	PSF
BOT CH.	LL	=	0.0	PSF
	DL	=	7.4	PSF
TOTAL LOAD		=	34.4	PSF

SPACING = 24.0 IN. C/C

THIS TRUSS IS DESIGNED FOR RESIDENTIAL OR SMALL BUILDING REQUIREMENTS OF PART 9, NBCC 2010, NBCC 2015

THIS DESIGN COMPLIES WITH:
- PART 9 OF OBC 2012, OBC 2018
- CSA 086-09, CSA 086-14
- TPIC 2011, TPIC 2014

(55 % OF 23.0 P.S.F. G.S.L. PLUS 8.4 P.S.F. RAIN LOAD) EQUALS 21.0 P.S.F. SPECIFIED ROOF LIVE LOAD

ALLOWABLE DEFL.(LL)= L/360 (0.38")
CALCULATED VERT. DEFL.(LL) = L/ 999 (0.03")
ALLOWABLE DEFL.(TL)= L/360 (0.38")
CALCULATED VERT. DEFL.(TL) = L/ 999 (0.11")

CSI: TC=0.22/1.00 (B-C:1) , BC=0.42/1.00 (G-H:1) , WB=0.45/1.00 (C-I:1) , SSI=0.19/1.00 (F-G:1)

DOL LUMBER=1.00 NAIL=1.00 LS BEND=1.10 COMP=1.10 SHEAR=1.10 TENS= 1.10

COMPANION LIVE LOAD FACTOR = 1.00

AUTOSOLVE RIGHT HEEL ONLY

TRUSS PLATE MANUFACTURER IS NOT RESPONSIBLE FOR QUALITY CONTROL IN THE TRUSS MANUFACTURING PLANT .

NAIL VALUES

PLATE	GRIP(DRY) (PSI) MAX	MIN	SHEAR (PLI) MAX	MIN	SECTION (PLI) MAX	MIN
MT20	618	354	1667	788	1987	1656

PLATE PLACEMENT TOL. = 0.250 Inches

PLATE ROTATION TOL. = 5.0 Deg.

JSI GRIP= 0.90 (C) (INPUT = 0.90)
JSI METAL= 0.32 (G) (INPUT = 1.00)

A-18023044

JOB NAME	TRUSS NAME	QUANTITY	PLY	JOB DESC.	DRWG NO.
292566	H1A	1	1	TRUSS DESC.	

Alpa Roof Truss, Maple

Version 8.200 S Jan 6 2018 MiTek Industries, Inc. Thu Feb 15 08:25:24 2018 Page 1
ID:84gOFYESM8s1JmDO6_uSGRyQWjP-nEAysnL3lO1zTGL2g5LL_GxxFplBCwO30bQ8j7zkyyv

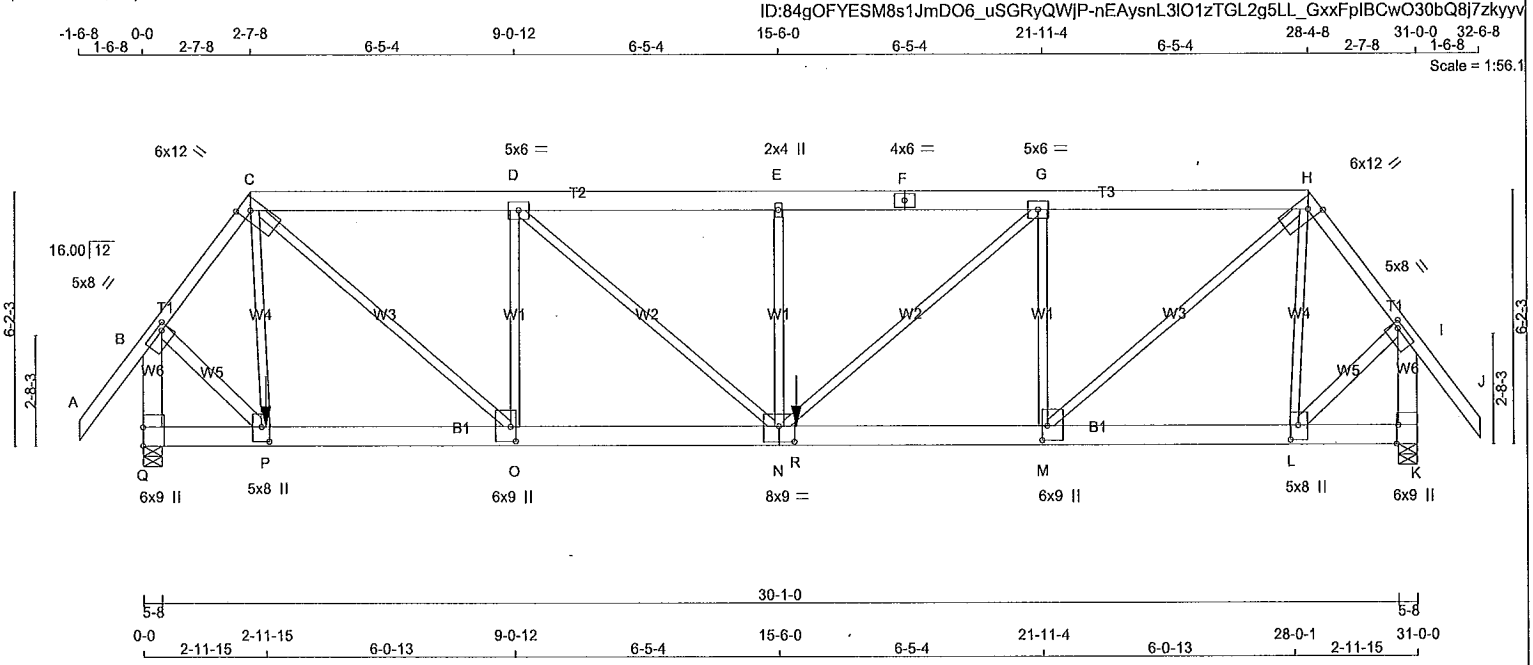

TOTAL WEIGHT = 182 lb

LUMBER

N. L. G. A. RULES

CHORDS	SIZE		LUMBER	DESCR.
A - C	2x4	DRY	No.2	SPF
C - F	2x6	DRY	No.2	SPF
F - H	2x6	DRY	No.2	SPF
H - J	2x4	DRY	No.2	SPF
Q - B	2x6	DRY	No.2	SPF
K - I	2x6	DRY	No.2	SPF
Q - N	2x6	DRY	1650F 1.5E	SPF
N - K	2x6	DRY	1650F 1.5E	SPF
ALL WEBS EXCEPT	2x3	DRY	No.2	SPF
B - P	2x4	DRY	No.2	SPF
L - I	2x4	DRY	No.2	SPF

DRY: SEASONED LUMBER.

PLATES (table is in inches)

JT	TYPE	PLATES	W	LEN	Y	X
B	TMVW-t	MT20	5.0	8.0	1.50	2.00
C	TTWW+h	MT20	6.0	12.0	3.25	2.75
D	TMWW-t	MT20	5.0	6.0		
E	TMW+w	MT20	2.0	4.0		
F	TS-t	MT20	4.0	6.0		
G	TMWW-t	MT20	5.0	6.0		
H	TTWW+h	MT20	6.0	12.0	3.25	2.75
I	TMVW-t	MT20	5.0	8.0	1.50	2.00
K	BMV1+t	MT20	6.0	9.0	Edge	0.50
L	BMWW+t	MT20	5.0	8.0	4.25	2.25
M	BMWW+t	MT20	6.0	9.0	4.25	1.50
N	BSWWW-I	MT20	8.0	9.0	4.50	4.50
O	BMWW+t	MT20	6.0	9.0	4.25	1.50
P	BMWW+t	MT20	5.0	8.0	4.25	2.25
Q	BMV1+t	MT20	6.0	9.0	5.50	

Edge - INDICATES REFERENCE CORNER OF PLATE TOUCHES EDGE OF CHORD.

HANGERS NOTES

NOTE: Lateral brace(s) shown shall be 1x4 for Part 9 design as per OBC 9.23.13.11, and no less than 2x4 for Part 4 design

REGISTERED PROFESSIONAL ENGINEER
02/15/2018
EDWIN C. FOK
PROVINCE OF ONTARIO

DIMENSIONS, SUPPORTS AND LOADINGS SPECIFIED BY FABRICATOR TO BE VERIFIED BY BUILDING DESIGNER

BEARINGS

JT	FACTORED GROSS REACTION VERT	HORZ	MAXIMUM FACTORED GROSS REACTION DOWN	HORZ	UPLIFT	INPUT BRG IN-SX	REQRD BRG IN-SX
Q	4895	0	4895	0	0	5-8	5-8
K	4254	0	4254	0	0	5-8	5-8

UNFACTORED REACTIONS

JT	1ST LCASE COMBINED	MAX./MIN. COMPONENT REACTIONS SNOW	LIVE	PERM.LIVE	WIND	DEAD	SOIL
Q	3488	2144 / 0	0 / 0	0 / 0	0 / 0	1344 / 0	0 / 0
K	3030	1865 / 0	0 / 0	0 / 0	0 / 0	1166 / 0	0 / 0

BEARING MATERIAL TO BE SPF NO.2 OR BETTER AT JOINT(S) Q, K
BEARING SIZE FACTOR = 1.15 AT JNT(S) Q, K (BASED ON SUPPORT DEPTH = 1-8)

BRACING

TOP CHORD TO BE SHEATHED OR MAX. PURLIN SPACING = 3.34 FT.
MAX. UNBRACED BOTTOM CHORD LENGTH = 10.00 FT OR RIGID CEILING DIRECTLY APPLIED.

ALL PITCH BREAKS AND PERIMETER CORNER JOINTS MUST BE LATERALLY RESTRAINED.

LOADING

TOTAL LOAD CASES: (4)

CHORDS

MEMB. FR-TO	MAX. FACTORED FORCE (LBS)	FACTORED VERT. LOAD (PLF) FROM	TO	LC1	MAX CSI (LC)	MAX. UNBRAC LENGTH
A- B	0 / 52	-78.0	-78.0	0.17 (1)	10.00	
B- C	-3530 / 0	-78.0	-78.0	0.30 (1)	3.50	
C- D	-4251 / 0	-78.0	-78.0	0.38 (1)	3.88	
D- E	-5582 / 0	-78.0	-78.0	0.48 (1)	3.34	
E- F	-5582 / 0	-78.0	-78.0	0.45 (1)	3.38	
F- G	-5582 / 0	-78.0	-78.0	0.45 (1)	3.38	
G- H	-4823 / 0	-78.0	-78.0	0.41 (1)	3.65	
H- I	-3128 / 0	-78.0	-78.0	0.26 (1)	3.73	
I- J	0 / 52	-78.0	-78.0	0.17 (1)	10.00	
Q- B	-4612 / 0	0.0	0.0	0.46 (1)	4.97	
K- I	-4113 / 0	0.0	0.0	0.41 (1)	5.25	

WEBS

MEMB. FR-TO	MAX. FACTORED FORCE (LBS)	MAX CSI (LC)
C- P	0 / 659	0.16 (1)
O- D	-1749 / 0	0.94 (1)
D- N	0 / 1781	0.44 (1)
N- E	-462 / 0	0.25 (1)
N- G	0 / 1016	0.25 (1)
M- G	-1229 / 0	0.66 (1)
L- H	-460 / 0	0.25 (1)
B- P	0 / 2625	0.46 (1)
L- I	0 / 2326	0.41 (1)
C- O	0 / 2797	0.69 (1)
M- H	0 / 3984	0.99 (1)

Q- P	0 / 0	-209.4	-209.4	0.10 (1)	10.00
P- O	0 / 2159	-18.5	-18.5	0.22 (1)	10.00
O- N	0 / 4251	-18.5	-18.5	0.39 (1)	10.00
N- R	0 / 4823	-18.5	-18.5	0.83 (1)	10.00
R- M	0 / 4823	-186.3	-186.3	0.83 (1)	10.00
M- L	0 / 1843	-186.3	-186.3	0.56 (1)	10.00
L- K	0 / 0	-186.3	-186.3	0.21 (1)	10.00

FACTORED CONCENTRATED LOADS (LBS)

JT	LOC.	LC1	MAX-	MAX+	FACE	DIR.	TYPE
P	2-11-14	-1798	-1798	---	FRONT	VERT	TOTAL
R	15-11-0	-997	-997	---	FRONT	VERT	TOTAL

[M]

DESIGN CRITERIA

*** SPECIAL LOADS ANALYSIS ***
GEOMETRY AND/OR BASIC LOADS CHANGED BY USER.
LOADS WERE DERIVED FROM USER INPUT
NO FURTHER MODIFICATIONS WERE MADE

SPECIFIED LOADS:

TOP CH.	LL	=	21.0	PSF
	DL	=	6.0	PSF
BOT CH.	LL	=	0.0	PSF
	DL	=	7.4	PSF
TOTAL LOAD		=	34.4	PSF

SPACING = 24.0 IN. C/C

LOADING IN FLAT SECTION BASED ON A SLOPE OF 2.00/12 MINIMUM

GIRDER TYPE: CStdGirder
START DISTANCE = 0-0
START SPAN CARRIED = 9-11-0
END DISTANCE = 2-11-14
END SPAN CARRIED = 9-11-0
END WALL WIDTH = 0-0
APPLIED TO FRONT SIDE OF BOTTOM CHORD.
- ADDT'L LOADS BASED ON 55 % OF GSL.

GIRDER TYPE: CStdGirder
START DISTANCE = 15-11-0
START SPAN CARRIED = 8-11-8
END DISTANCE = 31-0-0
END SPAN CARRIED = 8-11-8
END WALL WIDTH = 0-0
APPLIED TO FRONT SIDE OF BOTTOM CHORD.
- ADDT'L LOADS BASED ON 55 % OF GSL.

*** NON STANDARD GIRDER ***
ADDT'L USER-DEFINED LOADS APPLIED TO ALL LOAD CASES.

THIS TRUSS IS DESIGNED FOR RESIDENTIAL OR SMALL BUILDING REQUIREMENTS OF PART 9, NBCC 2010, NBCC 2015

THIS DESIGN COMPLIES WITH:
- PART 9 OF OBC 2012, OBC 2018
- CSA 086-09, CSA 086-14
- TPIC 2011, TPIC 2014

(55 % OF 23.0 P.S.F. G.S.L. PLUS 8.4 P.S.F. RAIN LOAD) EQUALS 21.0 P.S.F. SPECIFIED ROOF LIVE LOAD

ALLOWABLE DEFL.(LL)= L/360 (1.03")
CALCULATED VERT. DEFL.(LL) = L/ 999 (0.23")
ALLOWABLE DEFL.(TL)= L/360 (1.03")
CALCULATED VERT. DEFL.(TL) = L/ 796 (0.47")

CSI: TC=0.48/1.00 (D-E:1) , BC=0.83/1.00 (M-N:1) , WB=0.99/1.00 (H-M:1) , SSI=0.89/1.00 (M-N:1)

DOL LUMBER=1.00 NAIL=1.00 LS BEND=1.00 COMP=1.00 SHEAR=1.00 TENS= 1.00

COMPANION LIVE LOAD FACTOR = 1.00

A-18023045

CONTINUED ON PAGE 2

JOB NAME	TRUSS NAME	QUANTITY	PLY	JOB DESC.	DRWG NO.
292566	H2	1	1	TRUSS DESC.	

Alpa Roof Truss, Maple

Version 8.200 S Jan 6 2018 MiTek Industries, Inc. Thu Feb 15 08:12:20 2018 Page 1

ID:84gOFYESM8s1JmDO6_uSGRyQWjP-kPoaJjsHOWFCPnPMlRHVCxT0_ntNWPWfkcVeDazkz99

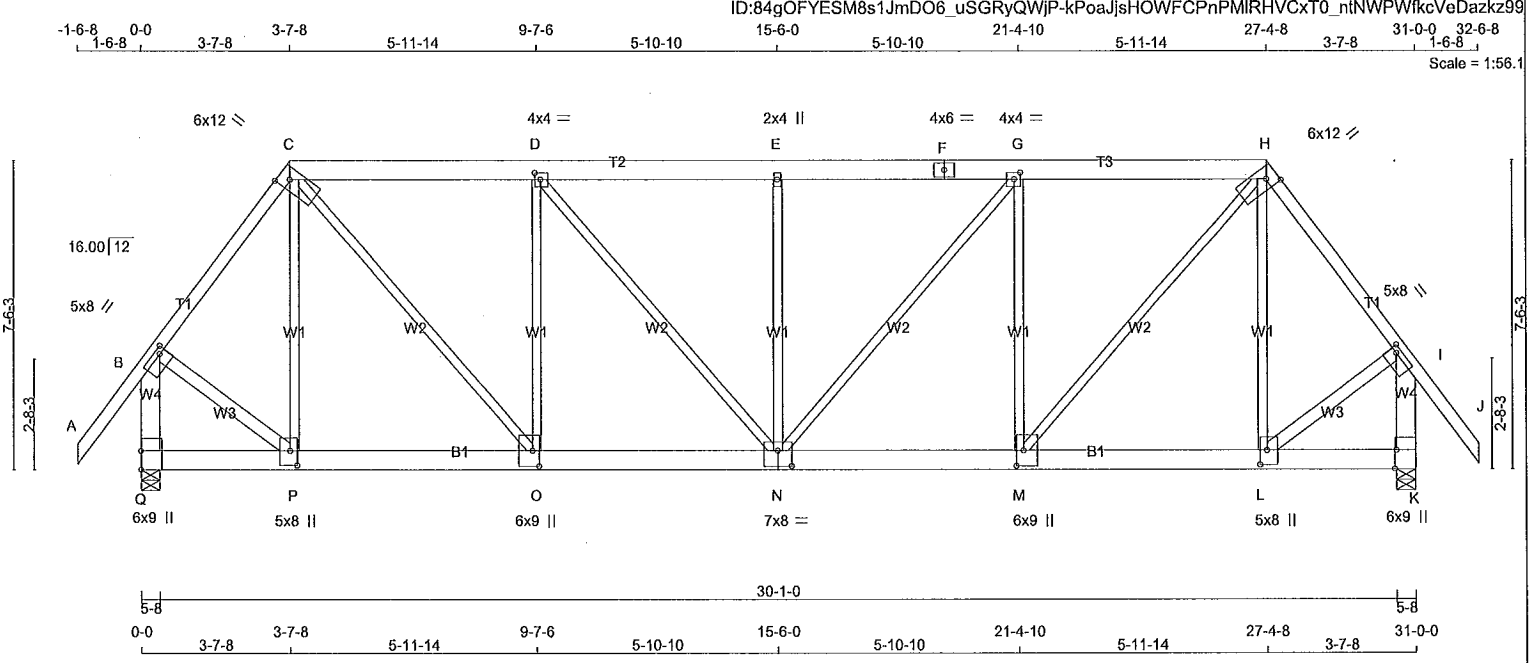

TOTAL WEIGHT = 191 lb

[M]

LUMBER

N. L. G. A. RULES

CHORDS	SIZE		LUMBER	DESCR.
A - C	2x4	DRY	No.2	SPF
C - F	2x6	DRY	No.2	SPF
F - H	2x6	DRY	No.2	SPF
H - J	2x4	DRY	No.2	SPF
Q - B	2x6	DRY	No.2	SPF
K - I	2x6	DRY	No.2	SPF
Q - N	2x6	DRY	1650F 1.5E	SPF
N - K	2x6	DRY	1650F 1.5E	SPF
ALL WEBS EXCEPT	2x3	DRY	No.2	SPF
B - P	2x4	DRY	No.2	SPF
L - I	2x4	DRY	No.2	SPF

DRY: SEASONED LUMBER.

PLATES (table is in inches)

JT	TYPE	PLATES	W	LEN	Y	X
B	TMVW-t	MT20	5.0	8.0	1.50	2.00
C	TTWW+h	MT20	6.0	12.0	3.25	2.75
D	TMWW-t	MT20	4.0	4.0	2.00	1.75
E	TMW+w	MT20	2.0	4.0		
F	TS-t	MT20	4.0	6.0		
G	TMWW-t	MT20	4.0	4.0	2.00	1.75
H	TTWW+h	MT20	6.0	12.0	3.25	2.75
I	TMVW-t	MT20	5.0	8.0	1.50	2.00
K	BMV1+t	MT20	6.0	9.0	Edge	0.50
L	BMWW+t	MT20	5.0	8.0	4.25	2.00
M	BMWW+t	MT20	6.0	9.0	4.50	2.00
N	BSWWW-l	MT20	7.0	8.0	4.50	4.00
O	BMWW+t	MT20	6.0	9.0	4.50	2.00
P	BMWW+t	MT20	5.0	8.0	4.25	2.00
Q	BMV1+t	MT20	6.0	9.0	5.50	

Edge - INDICATES REFERENCE CORNER OF PLATE TOUCHES EDGE OF CHORD.

NOTE: Lateral brace(s) shown shall be 1x4 for Part 9 design as per OBC 9.23.13.11, and no less than 2x4 for Part 4 design

REGISTERED PROFESSIONAL ENGINEER
02/15/2018
EDWIN C. FOK
PROVINCE OF ONTARIO

DIMENSIONS, SUPPORTS AND LOADINGS SPECIFIED BY FABRICATOR TO BE VERIFIED BY BUILDING DESIGNER

BEARINGS

JT	FACTORED GROSS REACTION VERT	HORZ	MAXIMUM FACTORED GROSS REACTION DOWN	HORZ	UPLIFT	INPUT BRG IN-SX	REQRD BRG IN-SX
Q	1625	0	1625	0	0	5-8	1-12
K	1625	0	1625	0	0	5-8	1-12

UNFACTORED REACTIONS

JT	1ST LCASE COMBINED	MAX./MIN. COMPONENT REACTIONS SNOW	LIVE	PERM.LIVE	WIND	DEAD	SOIL
Q	1156	720 / 0	0 / 0	0 / 0	0 / 0	435 / 0	0 / 0
K	1156	720 / 0	0 / 0	0 / 0	0 / 0	435 / 0	0 / 0

BEARING MATERIAL TO BE SPF NO.2 OR BETTER AT JOINT(S) Q, K

BRACING

TOP CHORD TO BE SHEATHED OR MAX. PURLIN SPACING = 5.63 FT.
MAX. UNBRACED BOTTOM CHORD LENGTH = 10.00 FT OR RIGID CEILING DIRECTLY APPLIED.

ALL PITCH BREAKS AND PERIMETER CORNER JOINTS MUST BE LATERALLY RESTRAINED.

LOADING

TOTAL LOAD CASES: (4)

CHORDS

MEMB. FR-TO	MAX. FACTORED FORCE (LBS)	FACTORED VERT. LOAD (PLF) FROM	TO	LC1 MAX CSI (LC)	MAX. UNBRAC LENGTH
A- B	0 / 52	-78.0	-78.0	0.17 (1)	10.00
B- C	-1156 / 0	-78.0	-78.0	0.23 (1)	5.63
C- D	-1450 / 0	-78.0	-78.0	0.22 (1)	6.15
D- E	-1666 / 0	-78.0	-78.0	0.23 (1)	5.83
E- F	-1666 / 0	-78.0	-78.0	0.23 (1)	5.83
F- G	-1666 / 0	-78.0	-78.0	0.23 (1)	5.83
G- H	-1450 / 0	-78.0	-78.0	0.22 (1)	6.15
H- I	-1156 / 0	-78.0	-78.0	0.23 (1)	5.63
I- J	0 / 52	-78.0	-78.0	0.17 (1)	10.00
Q- B	-1607 / 0	0.0	0.0	0.16 (1)	7.72
K- I	-1607 / 0	0.0	0.0	0.16 (1)	7.72
Q- P	0 / 0	-18.5	-18.5	0.04 (4)	10.00
P- O	0 / 688	-18.5	-18.5	0.09 (1)	10.00
O- N	0 / 1450	-18.5	-18.5	0.15 (1)	10.00
N- M	0 / 1450	-18.5	-18.5	0.15 (1)	10.00
M- L	0 / 688	-18.5	-18.5	0.09 (1)	10.00
L- K	0 / 0	-18.5	-18.5	0.04 (4)	10.00

WEBS

MEMB. FR-TO	MAX. FACTORED FORCE (LBS)	MAX CSI (LC)
P- C	-302 / 0	0.28 (1)
C- O	0 / 1176	0.29 (1)
O- D	-784 / 0	0.72 (1)
D- N	0 / 337	0.08 (1)
N- E	-423 / 0	0.39 (1)
N- G	0 / 337	0.08 (1)
M- G	-784 / 0	0.72 (1)
M- H	0 / 1176	0.29 (1)
L- H	-302 / 0	0.28 (1)
B- P	0 / 805	0.14 (1)
L- I	0 / 805	0.14 (1)

DESIGN CRITERIA

SPECIFIED LOADS:

TOP CH.	LL	=	21.0	PSF
	DL	=	6.0	PSF
BOT CH.	LL	=	0.0	PSF
	DL	=	7.4	PSF
TOTAL LOAD		=	34.4	PSF

SPACING = 24.0 IN. C/C

LOADING IN FLAT SECTION BASED ON A SLOPE OF 2.00/12 MINIMUM

THIS TRUSS IS DESIGNED FOR RESIDENTIAL OR SMALL BUILDING REQUIREMENTS OF PART 9, NBCC 2010, NBCC 2015

THIS DESIGN COMPLIES WITH:
- PART 9 OF OBC 2012, OBC 2018
- CSA 086-09, CSA 086-14
- TPIC 2011, TPIC 2014

(55 % OF 23.0 P.S.F. G.S.L. PLUS 8.4 P.S.F. RAIN LOAD) EQUALS 21.0 P.S.F. SPECIFIED ROOF LIVE LOAD

ALLOWABLE DEFL.(LL)= L/360 (1.03")
CALCULATED VERT. DEFL.(LL) = L/ 999 (0.05")
ALLOWABLE DEFL.(TL)= L/360 (1.03")
CALCULATED VERT. DEFL.(TL) = L/ 999 (0.11")

CSI: TC=0.23/1.00 (B-C:1) , BC=0.15/1.00 (N-O:1) , WB=0.72/1.00 (D-O:1) , SSI=0.18/1.00 (G-H:1)

DOL LUMBER=1.00 NAIL=1.00 LS BEND=1.00 COMP=1.00 SHEAR=1.00 TENS= 1.00

COMPANION LIVE LOAD FACTOR = 1.00

AUTOSOLVE HEELS OFF

TRUSS PLATE MANUFACTURER IS NOT RESPONSIBLE FOR QUALITY CONTROL IN THE TRUSS MANUFACTURING PLANT .

NAIL VALUES

PLATE	GRIP(DRY) (PSI) MAX	MIN	SHEAR (PLI) MAX	MIN	SECTION (PLI) MAX	MIN
MT20	618	354	1667	788	1987	1656

PLATE PLACEMENT TOL. = 0.250 inches

PLATE ROTATION TOL. = 5.0 Deg.

JSI GRIP= 0.56 (D) (INPUT = 0.90)
JSI METAL= 0.26 (B) (INPUT = 1.00)

A-18023046

JOB NAME	TRUSS NAME	QUANTITY	PLY	JOB DESC.	DRWG NO.
292566	H2A	1	2	TRUSS DESC.	

Alpa Roof Truss, Maple

Version 8.200 S Jan 6 2018 MiTek Industries, Inc. Thu Feb 15 08:11:48 2018 Page 1

ID:84gOFYESM8s1JmDO6_uSGRyQWjP-gFtTbmTCwgDlZtzDtjl?vB8UXtnf0tOyNely5Qzkz9f

-1-6-8 0-0 3-7-8 9-7-6 15-6-0 21-4-10 27-4-8 31-0-0 32-6-8

1-6-8 3-7-8 5-11-14 5-10-10 5-10-10 5-11-14 3-7-8 1-6-8

Scale = 1:56.1

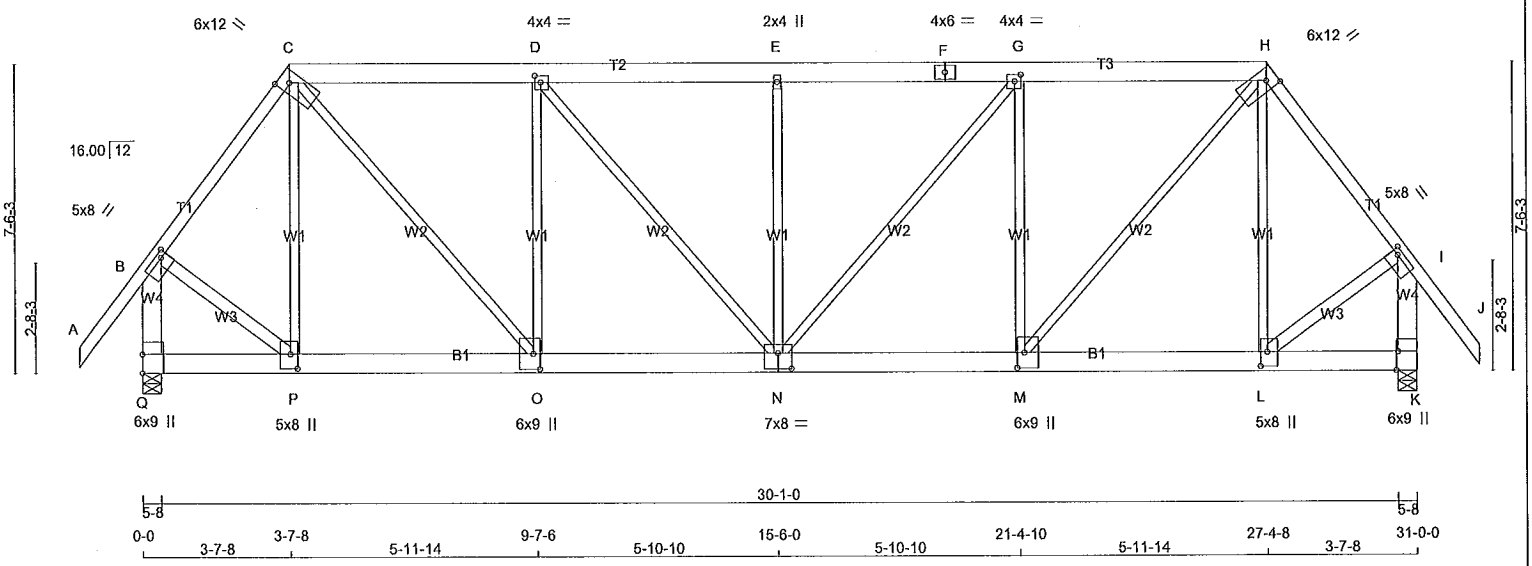

TOTAL WEIGHT = 2 X 191 = 383 lb

[M]

LUMBER

N. L. G. A. RULES

CHORDS	SIZE		LUMBER	DESCR.
A - C	2x4	DRY	No.2	SPF
C - F	2x6	DRY	No.2	SPF
F - H	2x6	DRY	No.2	SPF
H - J	2x4	DRY	No.2	SPF
Q - B	2x6	DRY	No.2	SPF
K - I	2x6	DRY	No.2	SPF
Q - N	2x6	DRY	1650F 1.5E	SPF
N - K	2x6	DRY	1650F 1.5E	SPF
ALL WEBS EXCEPT	2x3	DRY	No.2	SPF
B - P	2x4	DRY	No.2	SPF
L - I	2x4	DRY	No.2	SPF

DRY: SEASONED LUMBER.

DESIGN CONSISTS OF 2 TRUSSES BUILT SEPARATELY THEN FASTENED TOGETHER AS FOLLOWS:

CHORDS	#ROWS	SURFACE SPACING (IN)	LOAD(PLF)
TOP CHORDS : (0.122"X3") SPIRAL NAILS			
A- C	1	12	TOP
H- J	1	12	TOP
C- F	2	12	TOP
F- H	2	12	TOP
Q- B	2	12	TOP
K- I	2	12	TOP
BOTTOM CHORDS : (0.122"X3") SPIRAL NAILS			
Q- N	2	9	SIDE(265.9)
N- K	2	9	SIDE(265.9)
WEBS : (0.122"X3") SPIRAL NAILS			
2x3	1	6	
2x4	1	6	

NAILS TO BE DRIVEN FROM ONE SIDE ONLY.

TOP - COMPONENTS ARE LOADED FROM THE TOP AND MUST BE PLACED ON TOP EDGE OF ALL PLIES FOR THE LOAD TO BE TRANSFERRED TO EACH PLY.

NOTE: Lateral brace(s) shown shall be 1x4 for Part 9 design as per OBC 9.23.13.11, and no less than 2x4 for Part 4 design

REGISTERED PROFESSIONAL ENGINEER
02/15/2018
EDWIN C. FOK
PROVINCE OF ONTARIO

DIMENSIONS, SUPPORTS AND LOADINGS SPECIFIED BY FABRICATOR TO BE VERIFIED BY BUILDING DESIGNER

BEARINGS

JT	FACTORED GROSS REACTION VERT	HORZ	MAXIMUM FACTORED GROSS REACTION DOWN	HORZ	UPLIFT	INPUT BRG IN-SX	REQRD BRG IN-SX
Q	9866	0	9866	0	0	5-8	5-8
K	9866	0	9866	0	0	5-8	5-8

UNFACTORED REACTIONS

JT	1ST LCASE COMBINED	MAX./MIN. COMPONENT REACTIONS SNOW	LIVE	PERM.LIVE	WIND	DEAD	SOIL
Q	7032	4307 / 0	0 / 0	0 / 0	0 / 0	2725 / 0	0 / 0
K	7032	4307 / 0	0 / 0	0 / 0	0 / 0	2725 / 0	0 / 0

BEARING MATERIAL TO BE SPF NO.2 OR BETTER AT JOINT(S) Q, K

BEARING SIZE FACTOR = 1.15 AT JNT(S) Q, K (BASED ON SUPPORT DEPTH = 1-8)

BRACING

TOP CHORD TO BE SHEATHED OR MAX. PURLIN SPACING = 3.33 FT.

MAX. UNBRACED BOTTOM CHORD LENGTH = 10.00 FT OR RIGID CEILING DIRECTLY APPLIED.

ALL PITCH BREAKS AND PERIMETER CORNER JOINTS MUST BE LATERALLY RESTRAINED.

LOADING

TOTAL LOAD CASES: (4)

CHORDS

MEMB. FR-TO	MAX. FACTORED FORCE (LBS)	FACTORED VERT. LOAD (PLF) FROM	TO	LC1 CSI (LC)	MAX. UNBRAC LENGTH
A- B	0 / 52	-78.0	-78.0	0.08 (1)	10.00
B- C	-7706 / 0	-78.0	-78.0	0.43 (1)	3.33
C- D	-9440 / 0	-78.0	-78.0	0.28 (1)	3.81
D- E	-10710 / 0	-78.0	-78.0	0.29 (1)	3.59
E- F	-10710 / 0	-78.0	-78.0	0.29 (1)	3.59
F- G	-10710 / 0	-78.0	-78.0	0.29 (1)	3.59
G- H	-9440 / 0	-78.0	-78.0	0.28 (1)	3.81
H- I	-7706 / 0	-78.0	-78.0	0.43 (1)	3.33
I- J	0 / 52	-78.0	-78.0	0.08 (1)	10.00
Q- B	-9177 / 0	0.0	0.0	0.46 (1)	4.98
K- I	-9177 / 0	0.0	0.0	0.46 (1)	4.98
Q- P	0 / 0	-550.2	-550.2	0.32 (1)	10.00
P- O	0 / 4621	-550.2	-550.2	0.67 (1)	10.00
O- N	0 / 9440	-550.2	-550.2	0.87 (1)	10.00
N- M	0 / 9440	-550.2	-550.2	0.87 (1)	10.00
M- L	0 / 4621	-550.2	-550.2	0.67 (1)	10.00
L- K	0 / 0	-550.2	-550.2	0.32 (1)	10.00

WEBS

MEMB. FR-TO	MAX. FACTORED FORCE (LBS)	MAX CSI (LC)
P- C	0 / 132	0.02 (4)
O- D	-1998 / 0	0.91 (1)
D- N	0 / 1982	0.25 (1)
N- E	-452 / 0	0.21 (1)
N- G	0 / 1982	0.25 (1)
M- G	-1998 / 0	0.91 (1)
M- H	0 / 7442	0.92 (1)
L- H	0 / 132	0.02 (4)
B- P	0 / 5370	0.47 (1)
L- I	0 / 5370	0.47 (1)

DESIGN CRITERIA

SPECIFIED LOADS:

TOP CH.	LL	=	21.0	PSF
	DL	=	6.0	PSF
BOT CH.	LL	=	0.0	PSF
	DL	=	7.4	PSF
TOTAL LOAD		=	34.4	PSF

SPACING = 24.0 IN. C/C

LOADING IN FLAT SECTION BASED ON A SLOPE OF 2.00/12 MINIMUM

GIRDER TYPE: CStdGirder
START DISTANCE = 0-0
START SPAN CARRIED = 24-0-9
END DISTANCE = 31-0-0
END SPAN CARRIED = 24-0-9
END WALL WIDTH = 0-0
APPLIED TO FRONT SIDE OF BOTTOM CHORD.
- ADDT'L LOADS BASED ON 55 % OF GSL.

THIS TRUSS IS DESIGNED FOR RESIDENTIAL OR SMALL BUILDING REQUIREMENTS OF PART 9, NBCC 2010, NBCC 2015

THIS DESIGN COMPLIES WITH:
- PART 9 OF OBC 2012, OBC 2018
- CSA 086-09, CSA 086-14
- TPIC 2011, TPIC 2014

(55 % OF 23.0 P.S.F. G.S.L. PLUS 8.4 P.S.F. RAIN LOAD) EQUALS 21.0 P.S.F. SPECIFIED ROOF LIVE LOAD

ALLOWABLE DEFL.(LL)= L/360 (1.03")
CALCULATED VERT. DEFL.(LL) = L/ 999 (0.20")
ALLOWABLE DEFL.(TL)= L/360 (1.03")
CALCULATED VERT. DEFL.(TL) = L/ 947 (0.39")

CSI: TC=0.46/1.00 (I-K:1) , BC=0.87/1.00 (M-N:1) , WB=0.92/1.00 (H-M:1) , SSI=0.64/1.00 (M-N:1)

DOL LUMBER=1.00 NAIL=1.00 LS BEND=1.00 COMP=1.00 SHEAR=1.00 TENS= 1.00

COMPANION LIVE LOAD FACTOR = 1.00

AUTOSOLVE HEELS OFF

TRUSS PLATE MANUFACTURER IS NOT RESPONSIBLE FOR QUALITY CONTROL IN THE TRUSS MANUFACTURING PLANT .

NAIL VALUES

PLATE	GRIP(DRY) (PSI) MAX	MIN	SHEAR (PLI) MAX	MIN	SECTION (PLI) MAX	MIN
MT20	618	354	1667	788	1987	1656

PLATE PLACEMENT TOL. = 0.250 Inches

PLATE ROTATION TOL. = 5.0 Deg.

JSI GRIP= 0.90 (G) (INPUT = 0.90)
JSI METAL= 0.83 (P) (INPUT = 1.00)

A-18023047

CONTINUED ON PAGE 2

JOB NAME	TRUSS NAME	QUANTITY	PLY	JOB DESC.	DRWG NO.
292566	H2A	1	2	TRUSS DESC.	

Alpa Roof Truss, Maple

ID:84gOFYESM8s1JmDO6_uSGRyQWjP-gFtTbmTCwgDlZtzDtji?vB8UXtnf0tOyNely5Qzkz9f

PLATES (table is in inches)

JT	TYPE	PLATES	W	LEN	Y	X
B	TMVW-t	MT20	5.0	8.0	1.50	2.00
C	TTWW+h	MT20	6.0	12.0	3.25	2.75
D	TMWW-t	MT20	4.0	4.0	2.00	1.75
E	TMW+w	MT20	2.0	4.0		
F	TS-t	MT20	4.0	6.0		
G	TMWW-t	MT20	4.0	4.0	2.00	1.75
H	TTWW+h	MT20	6.0	12.0	3.25	2.75
I	TMVW-t	MT20	5.0	8.0	1.50	2.00
K	BMV1+t	MT20	6.0	9.0	Edge	0.50
L	BMWW+t	MT20	5.0	8.0	4.25	2.00
M	BMWW+t	MT20	6.0	9.0	4.50	2.00
N	BSWWW-l	MT20	7.0	8.0	4.50	4.00
O	BMWW+t	MT20	6.0	9.0	4.50	2.00
P	BMWW+t	MT20	5.0	8.0	4.25	2.00
Q	BMV1+t	MT20	6.0	9.0	5.50	

Edge - INDICATES REFERENCE CORNER OF PLATE TOUCHES EDGE OF CHORD.

NOTE: Lateral brace(s) shown shall be 1x4 for Part 9 design as per OBC 9.23.13.11, and no less than 2x4 for Part 4 design

REGISTERED PROFESSIONAL ENGINEER
02/15/2018
EDWIN C. FOK
PROVINCE OF ONTARIO

A-18023047(2)

JOB NAME	TRUSS NAME	QUANTITY	PLY	JOB DESC.	DRWG NO.
292566	H3	2	1	TRUSS DESC.	

Alpa Roof Truss, Maple

Version 8.200 S Jan 6 2018 MiTek Industries, Inc. Thu Feb 15 08:12:30 2018 Page 1
ID:84gOFYESM8s1JmDO6_uSGRyQWjP-RKPLP7_Y1aWncKAHKXTrc2tcTpE0s1N81AwAa?zkz9?

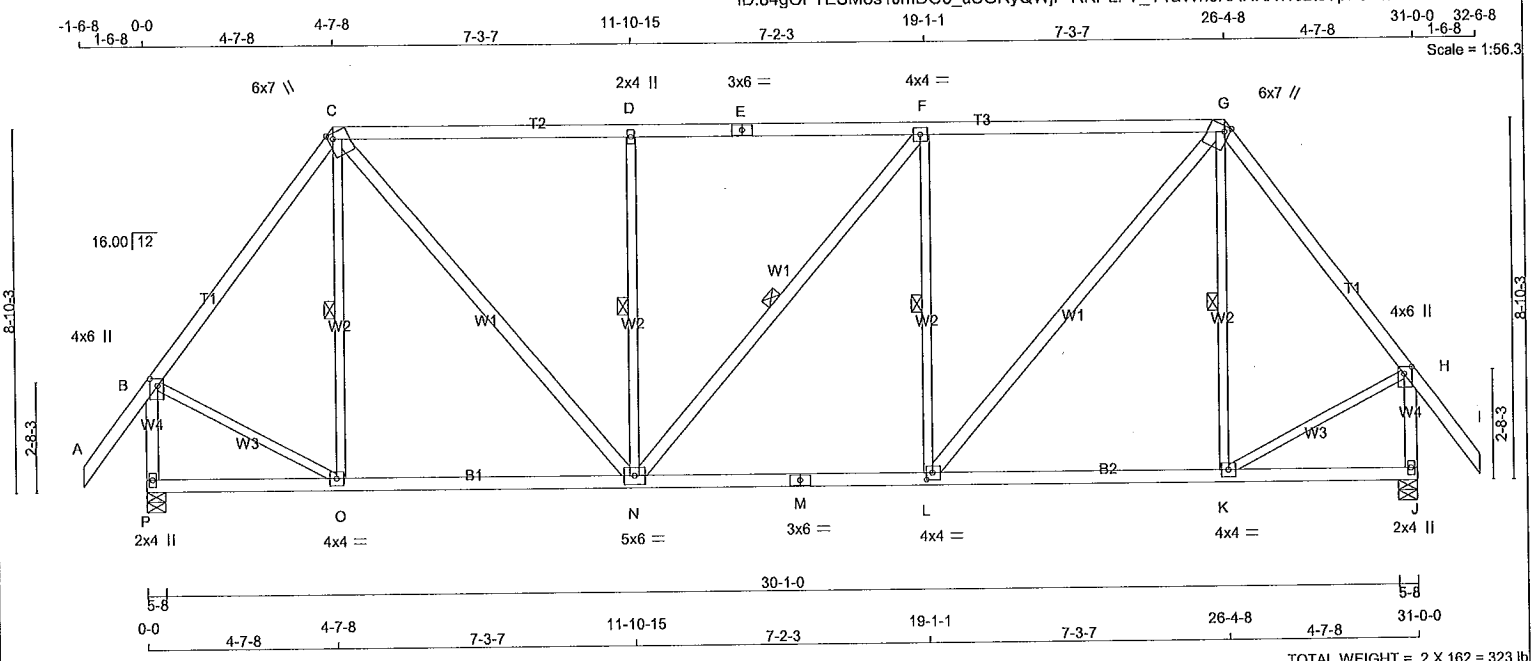

TOTAL WEIGHT = 2 X 162 = 323 lb [M]

LUMBER
N. L. G. A. RULES

CHORDS	SIZE		LUMBER	DESCR.
A - C	2x4	DRY	No.2	SPF
C - E	2x4	DRY	No.2	SPF
E - G	2x4	DRY	No.2	SPF
G - I	2x4	DRY	No.2	SPF
P - B	2x4	DRY	No.2	SPF
J - H	2x4	DRY	No.2	SPF
P - M	2x4	DRY	No.2	SPF
M - J	2x4	DRY	No.2	SPF
ALL WEBS EXCEPT	2x3	DRY	No.2	SPF
C - N	2x4	DRY	No.2	SPF
N - F	2x4	DRY	No.2	SPF
L - G	2x4	DRY	No.2	SPF

DRY: SEASONED LUMBER.

PLATES (table is in inches)

JT	TYPE	PLATES	W	LEN	Y	X
B	TMVW+p	MT20	4.0	6.0	2.00	2.25
C	TTWW+m	MT20	6.0	7.0	Edge	1.50
D	TMW+w	MT20	2.0	4.0		
E	TS-t	MT20	3.0	6.0		
F	TMWW-t	MT20	4.0	4.0		
G	TTWW+m	MT20	6.0	7.0	Edge	1.50
H	TMVW+p	MT20	4.0	6.0	2.00	2.25
J	BMV1+p	MT20	2.0	4.0		
K	BMWW-t	MT20	4.0	4.0		
L	BMWW-t	MT20	4.0	4.0	2.00	1.75
M	BS-t	MT20	3.0	6.0		
N	BMWWW-t	MT20	5.0	6.0		
O	BMWW-t	MT20	4.0	4.0		
P	BMV1+p	MT20	2.0	4.0		

Edge - INDICATES REFERENCE CORNER OF PLATE TOUCHES EDGE OF CHORD.

NOTE: Lateral brace(s) shown shall be 1x4 for Part 9 design as per OBC 9.23.13.11, and no less than 2x4 for Part 4 design

REGISTERED PROFESSIONAL ENGINEER
02/15/2018
EDWIN C. FOK
PROVINCE OF ONTARIO

DIMENSIONS, SUPPORTS AND LOADINGS SPECIFIED BY FABRICATOR TO BE VERIFIED BY BUILDING DESIGNER

BEARINGS

JT	FACTORED GROSS REACTION VERT	HORZ	MAXIMUM FACTORED GROSS REACTION DOWN	HORZ	UPLIFT	INPUT BRG IN-SX	REQRD BRG IN-SX
P	1625	0	1625	0	0	5-8	2-6
J	1625	0	1625	0	0	5-8	2-6

UNFACTORED REACTIONS

JT	1ST LCASE COMBINED	MAX./MIN. COMPONENT REACTIONS SNOW	LIVE	PERM.LIVE	WIND	DEAD	SOIL
P	1156	720 / 0	0 / 0	0 / 0	0 / 0	435 / 0	0 / 0
J	1156	720 / 0	0 / 0	0 / 0	0 / 0	435 / 0	0 / 0

BEARING MATERIAL TO BE SPF NO.2 OR BETTER AT JOINT(S) P, J

BRACING
TOP CHORD TO BE SHEATHED OR MAX. PURLIN SPACING = 4.67 FT.
MAX. UNBRACED BOTTOM CHORD LENGTH = 10.00 FT OR RIGID CEILING DIRECTLY APPLIED.

ALL PITCH BREAKS AND PERIMETER CORNER JOINTS MUST BE LATERALLY RESTRAINED.

1 LATERAL BRACE(S) AT 1/ 2 LENGTH OF C-O, D-N, F-N, F-L, G-K.

END VERTICAL(S) MUST BE SHEATHED OR HAVE BRACES AS INDICATED IN THE MAX. UNBRACED LENGTH COLUMN OF THE TABLE BELOW

LOADING
TOTAL LOAD CASES: (4)

CHORDS

MEMB. FR-TO	MAX. FACTORED FORCE (LBS)	FACTORED VERT. LOAD LC1 (PLF) FROM	TO	MAX CSI (LC)	MAX. UNBRAC LENGTH
A- B	0 / 52	-78.0	-78.0	0.15 (1)	10.00
B- C	-1178 / 0	-78.0	-78.0	0.37 (1)	5.47
C- D	-1337 / 0	-78.0	-78.0	0.67 (1)	4.69
D- E	-1337 / 0	-78.0	-78.0	0.68 (1)	4.68
E- F	-1337 / 0	-78.0	-78.0	0.68 (1)	4.68
F- G	-1338 / 0	-78.0	-78.0	0.68 (1)	4.67
G- H	-1177 / 0	-78.0	-78.0	0.37 (1)	5.47
H- I	0 / 52	-78.0	-78.0	0.15 (1)	10.00
P- B	-1595 / 0	0.0	0.0	0.23 (1)	6.54
J- H	-1595 / 0	0.0	0.0	0.23 (1)	6.54
P- O	0 / 0	-18.5	-18.5	0.16 (4)	10.00
O- N	0 / 700	-18.5	-18.5	0.26 (4)	10.00
N- M	0 / 1338	-18.5	-18.5	0.32 (1)	10.00
M- L	0 / 1338	-18.5	-18.5	0.32 (1)	10.00
L- K	0 / 700	-18.5	-18.5	0.26 (4)	10.00
K- J	0 / 0	-18.5	-18.5	0.16 (4)	10.00

WEBS

MEMB. FR-TO	MAX. FACTORED FORCE (LBS)	MAX CSI (LC)
O- C	-217 / 2	0.11 (1)
C- N	0 / 979	0.16 (1)
N- D	-609 / 0	0.31 (1)
N- F	-2 / 0	0.00 (1)
L- F	-610 / 0	0.31 (1)
L- G	0 / 981	0.16 (1)
K- G	-218 / 2	0.11 (1)
B- O	0 / 781	0.18 (1)
K- H	0 / 781	0.18 (1)

DESIGN CRITERIA

SPECIFIED LOADS:

TOP CH.	LL	=	21.0	PSF
	DL	=	6.0	PSF
BOT CH.	LL	=	0.0	PSF
	DL	=	7.4	PSF
TOTAL LOAD		=	34.4	PSF

SPACING = 24.0 IN. C/C

LOADING IN FLAT SECTION BASED ON A SLOPE OF 2.00/12 MINIMUM

THIS TRUSS IS DESIGNED FOR RESIDENTIAL OR SMALL BUILDING REQUIREMENTS OF PART 9, NBCC 2010, NBCC 2015

THIS DESIGN COMPLIES WITH:
- PART 9 OF OBC 2012, OBC 2018
- CSA 086-09, CSA 086-14
- TPIC 2011, TPIC 2014

(55 % OF 23.0 P.S.F. G.S.L. PLUS 8.4 P.S.F. RAIN LOAD) EQUALS 21.0 P.S.F. SPECIFIED ROOF LIVE LOAD

ALLOWABLE DEFL.(LL)= L/360 (1.03")
CALCULATED VERT. DEFL.(LL) = L/ 999 (0.05")
ALLOWABLE DEFL.(TL)= L/360 (1.03")
CALCULATED VERT. DEFL.(TL) = L/ 999 (0.11")

CSI: TC=0.68/1.00 (F-G:1) , BC=0.32/1.00 (L-N:1) , WB=0.31/1.00 (F-L:1) , SSI=0.26/1.00 (F-G:1)

DOL LUMBER=1.00 NAIL=1.00 LS BEND=1.10 COMP=1.10 SHEAR=1.10 TENS= 1.10

COMPANION LIVE LOAD FACTOR = 1.00

TRUSS PLATE MANUFACTURER IS NOT RESPONSIBLE FOR QUALITY CONTROL IN THE TRUSS MANUFACTURING PLANT .

NAIL VALUES

PLATE	GRIP(DRY) (PSI) MAX	MIN	SHEAR (PLI) MAX	MIN	SECTION (PLI) MAX	MIN
MT20	618	354	1667	788	1987	1656

PLATE PLACEMENT TOL. = 0.250 Inches

PLATE ROTATION TOL. = 5.0 Deg.

JSI GRIP= 0.90 (N) (INPUT = 0.90)
JSI METAL= 0.48 (M) (INPUT = 1.00)

A-18023048

JOB NAME	TRUSS NAME	QUANTITY	PLY	JOB DESC.	DRWG NO.
292566	H4	8	1	TRUSS DESC.	

Alpa Roof Truss, Maple

Version 8.200 S Jan 6 2018 MiTek Industries, Inc. Thu Feb 15 08:12:49 2018 Page 1

ID:84gOFYESM8s1JmDO6_uSGRyQWjP-O_3XOdCTZQv5OF7xx1Ilu2Av9Tk2pb8xPd1hkOzkz8

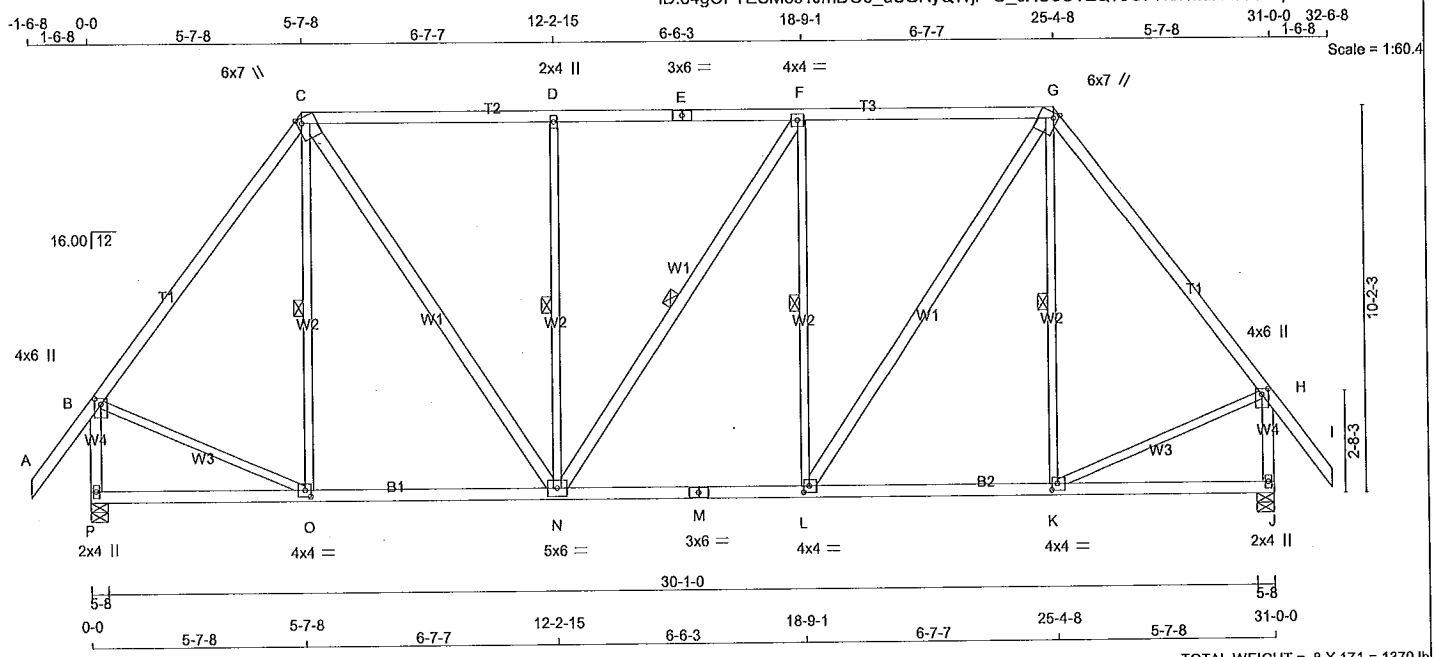

TOTAL WEIGHT = 8 X 171 = 1370 lb

[M][F]

LUMBER

N. L. G. A. RULES

CHORDS	SIZE		LUMBER	DESCR.
A - C	2x4	DRY	No.2	SPF
C - E	2x4	DRY	No.2	SPF
E - G	2x4	DRY	No.2	SPF
G - I	2x4	DRY	No.2	SPF
P - B	2x4	DRY	No.2	SPF
J - H	2x4	DRY	No.2	SPF
P - M	2x4	DRY	No.2	SPF
M - J	2x4	DRY	No.2	SPF
ALL WEBS	2x3	DRY	No.2	SPF
EXCEPT				
C - N	2x4	DRY	No.2	SPF
N - F	2x4	DRY	No.2	SPF
L - G	2x4	DRY	No.2	SPF

DRY: SEASONED LUMBER.

PLATES (table is in inches)

JT	TYPE	PLATES	W	LEN	Y	X
B	TMVW+p	MT20	4.0	6.0	1.75	2.00
C	TTWW+m	MT20	6.0	7.0	Edge	1.50
D	TMW+w	MT20	2.0	4.0		
E	TS-t	MT20	3.0	6.0		
F	TMWW-t	MT20	4.0	4.0		
G	TTWW+m	MT20	6.0	7.0	Edge	1.50
H	TMVW+p	MT20	4.0	6.0	1.75	2.00
J	BMV1+p	MT20	2.0	4.0		
K, L, O						
K	BMWW-t	MT20	4.0	4.0	2.00	1.75
M	BS-t	MT20	3.0	6.0		
N	BMWWW-t	MT20	5.0	6.0		
P	BMV1+p	MT20	2.0	4.0		

Edge - INDICATES REFERENCE CORNER OF PLATE TOUCHES EDGE OF CHORD.

NOTE: Lateral brace(s) shown shall be 1x4 for Part 9 design as per OBC 9.23.13.11, and no less than 2x4 for Part 4 design

REGISTERED PROFESSIONAL ENGINEER
02/15/2018
EDWIN C. FOK
PROVINCE OF ONTARIO

DIMENSIONS, SUPPORTS AND LOADINGS SPECIFIED BY FABRICATOR TO BE VERIFIED BY BUILDING DESIGNER

BEARINGS

JT	FACTORED GROSS REACTION VERT	HORZ	MAXIMUM FACTORED GROSS REACTION DOWN	HORZ	UPLIFT	INPUT BRG IN-SX	REQRD BRG IN-SX
P	1699	0	1699	0	0	5-8	2-8
J	1699	0	1699	0	0	5-8	2-8

UNFACTORED REACTIONS

JT	1ST LCASE COMBINED	MAX./MIN. COMPONENT REACTIONS SNOW	LIVE	PERM.LIVE	WIND	DEAD	SOIL
P	1215	720 / 0	0 / 0	0 / 0	0 / 0	495 / 0	0 / 0
J	1215	720 / 0	0 / 0	0 / 0	0 / 0	495 / 0	0 / 0

BEARING MATERIAL TO BE SPF NO.2 OR BETTER AT JOINT(S) P, J

BRACING

FOR SECTION C-G, MAX. PURLIN SPACING = 2.00 FT.
FOR OTHER SECTIONS, TOP CHORD TO BE SHEATHED OR MAX. PURLIN SPACING = 5.33 FT.
MAX. UNBRACED BOTTOM CHORD LENGTH = 10.00 FT OR RIGID CEILING DIRECTLY APPLIED.

ALL PITCH BREAKS AND PERIMETER CORNER JOINTS MUST BE LATERALLY RESTRAINED.

1 LATERAL BRACE(S) AT 1/ 2 LENGTH OF C-O, D-N, F-N, F-L, G-K.

END VERTICAL(S) MUST BE SHEATHED OR HAVE BRACES AS INDICATED IN THE MAX. UNBRACED LENGTH COLUMN OF THE TABLE BELOW

LOADING

TOTAL LOAD CASES: (4)

CHORDS

MEMB. FR-TO	MAX. FACTORED FORCE (LBS)	FACTORED VERT. LOAD LC1 (PLF) FROM	TO	MAX CSI (LC)	MAX. UNBRAC LENGTH
A- B	0 / 52	-78.0	-78.0	0.15 (1)	10.00
B- C	-1258 / 0	-78.0	-78.0	0.40 (1)	5.33
C- D	-1237 / 0	-85.5	-85.5	0.46 (1)	2.00
D- E	-1237 / 0	-85.5	-85.5	0.42 (1)	2.00
E- F	-1237 / 0	-85.5	-85.5	0.42 (1)	2.00
F- G	-1238 / 0	-85.5	-85.5	0.46 (1)	2.00
G- H	-1257 / 0	-78.0	-78.0	0.40 (1)	5.34
H- I	0 / 52	-78.0	-78.0	0.15 (1)	10.00
P- B	-1658 / 0	0.0	0.0	0.24 (1)	6.44
J- H	-1658 / 0	0.0	0.0	0.24 (1)	6.44
P- O	0 / 0	-18.5	-18.5	0.16 (4)	10.00
O- N	0 / 750	-18.5	-18.5	0.24 (4)	10.00
N- M	0 / 1239	-18.5	-18.5	0.28 (1)	10.00
M- L	0 / 1239	-18.5	-18.5	0.28 (1)	10.00
L- K	0 / 750	-18.5	-18.5	0.24 (4)	10.00
K- J	0 / 0	-18.5	-18.5	0.16 (4)	10.00

WEBS

MEMB. FR-TO	MAX. FACTORED FORCE (LBS)	MAX CSI (LC)
O- C	-173 / 10	0.12 (1)
C- N	0 / 874	0.14 (1)
N- D	-606 / 0	0.43 (1)
N- F	-2 / 0	0.00 (1)
L- F	-606 / 0	0.43 (1)
L- G	0 / 876	0.14 (1)
K- G	-175 / 10	0.12 (1)
B- O	0 / 810	0.18 (1)
K- H	0 / 809	0.18 (1)

DESIGN CRITERIA

SPECIFIED LOADS:

TOP CH.	LL	=	21.0	PSF
	DL	=	6.0	PSF
BOT CH.	LL	=	0.0	PSF
	DL	=	7.4	PSF
TOTAL LOAD		=	34.4	PSF

SPACING = 24.0 IN. C/C

LOADING IN FLAT SECTION BASED ON PIGGYBACK TRUSS WITH SLOPES OF 6.00/12 AND -6.00/12 AND RESPECTIVE WALL HEIGHTS OF 0-0 AND 0-0 AND AN ADDITIONAL DEAD LOAD OF 3.0 P.S.F.

THIS TRUSS IS DESIGNED FOR RESIDENTIAL OR SMALL BUILDING REQUIREMENTS OF PART 9, NBCC 2010, NBCC 2015

THIS DESIGN COMPLIES WITH:
- PART 9 OF OBC 2012, OBC 2018
- CSA 086-09, CSA 086-14
- TPIC 2011, TPIC 2014

(55 % OF 23.0 P.S.F. G.S.L. PLUS 8.4 P.S.F. RAIN LOAD) EQUALS 21.0 P.S.F. SPECIFIED ROOF LIVE LOAD

ALLOWABLE DEFL.(LL)= L/360 (1.03")
CALCULATED VERT. DEFL.(LL) = L/ 999 (0.04")
ALLOWABLE DEFL.(TL)= L/360 (1.03")
CALCULATED VERT. DEFL.(TL) = L/ 999 (0.10")

CSI: TC=0.46/1.00 (F-G:1) , BC=0.28/1.00 (L-N:1) , WB=0.43/1.00 (F-L:1) , SSI=0.26/1.00 (F-G:1)

DOL LUMBER=1.00 NAIL=1.00 LS BEND=1.10 COMP=1.10 SHEAR=1.10 TENS= 1.10

COMPANION LIVE LOAD FACTOR = 1.00

TRUSS PLATE MANUFACTURER IS NOT RESPONSIBLE FOR QUALITY CONTROL IN THE TRUSS MANUFACTURING PLANT .

NAIL VALUES

PLATE	GRIP(DRY) (PSI) MAX	MIN	SHEAR (PLI) MAX	MIN	SECTION (PLI) MAX	MIN
MT20	618	354	1667	788	1987	1656

PLATE PLACEMENT TOL. = 0.250 inches

PLATE ROTATION TOL. = 5.0 Deg.

JSI GRIP= 0.87 (P) (INPUT = 0.90)
JSI METAL= 0.51 (B) (INPUT = 1.00)

A-18023049

JOB NAME	TRUSS NAME	QUANTITY	PLY	JOB DESC.	DRWG NO.
292566	H5P	2	1	TRUSS DESC.	

Alpa Roof Truss, Maple

Version 8.200 S Jan 6 2018 MiTek Industries, Inc. Thu Feb 15 08:12:55 2018 Page 1
ID:84gOFYESM8s1JmDO6_uSGRyQWjP-D8QofgHE8GfE6Ab5IHPi7JP_FuqHDOGpnZU?x2zkz8c

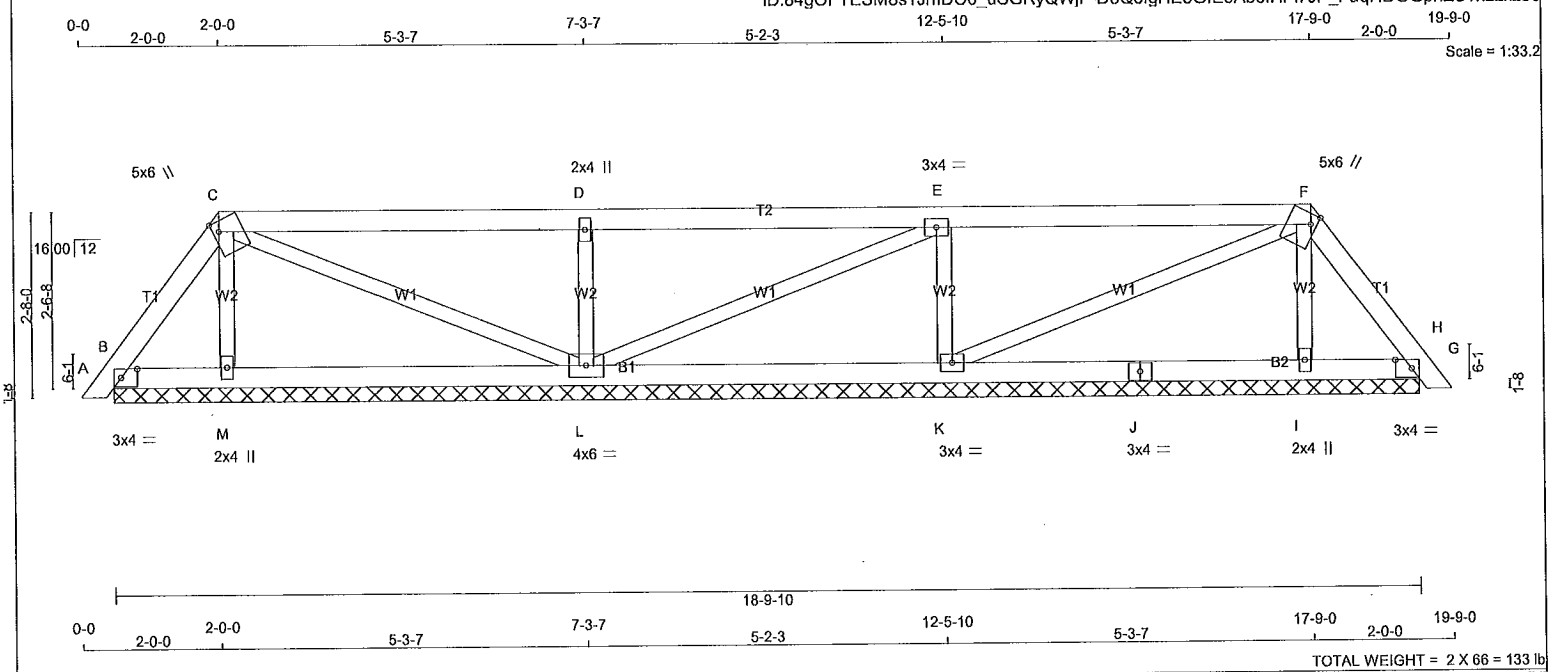

TOTAL WEIGHT = 2 X 66 = 133 lb

[M]

LUMBER

N. L. G. A. RULES

CHORDS	SIZE		LUMBER	DESCR.
A - C	2x4	DRY	No.2	SPF
C - F	2x4	DRY	No.2	SPF
F - H	2x4	DRY	No.2	SPF
B - J	2x4	DRY	No.2	SPF
J - G	2x4	DRY	No.2	SPF
ALL WEBS	2x3	DRY	No.2	SPF

DRY: SEASONED LUMBER.

PLATES (table is in inches)

JT	TYPE	PLATES	W	LEN	Y	X
B	TMB1-I	MT20	3.0	4.0	1.50	2.75
C	TTWW+m	MT20	5.0	6.0	1.75	1.00
D	TMW+w	MT20	2.0	4.0		
E	TMWW-t	MT20	3.0	4.0		
F	TTWW+m	MT20	5.0	6.0	1.75	1.00
G	TMB1-I	MT20	3.0	4.0	1.50	2.75
I	BMW1+w	MT20	2.0	4.0		
J	BS-t	MT20	3.0	4.0		
K	BMWW1-t	MT20	3.0	4.0		
L	BMWWW1-t	MT20	4.0	6.0		
M	BMW1+w	MT20	2.0	4.0		

NOTE: Lateral brace(s) shown shall be 1x4 for Part 9 design as per OBC 9.23.13.11, and no less than 2x4 for Part 4 design

REGISTERED PROFESSIONAL ENGINEER
02/15/2018
EDWIN C. FOK
PROVINCE OF ONTARIO

DIMENSIONS, SUPPORTS AND LOADINGS SPECIFIED BY FABRICATOR TO BE VERIFIED BY BUILDING DESIGNER

BEARINGS

JT	FACTORED GROSS REACTION VERT	HORZ	MAXIMUM FACTORED GROSS REACTION DOWN	HORZ	UPLIFT	INPUT BRG IN-SX	REQRD BRG IN-SX
B	135	0	135	0	0	18-9-10 (4-0-0	3-14
M	237	0	237	0	0	18-9-10 (4-0-0	3-14
L	577	0	577	0	0	18-9-10 (4-0-0	3-14
K	539	0	539	0	0	18-9-10 (4-0-0	3-14
I	230	0	230	0	0	18-9-10 (4-0-0	3-14
G	151	0	151	0	0	18-9-10 (4-0-0	3-14

VALUE IN PARENTHESIS INDICATES EFFECTIVE BEARING LENGTH

UNFACTORED REACTIONS

JT	1ST LCASE COMBINED	MAX./MIN. COMPONENT REACTIONS SNOW	LIVE	PERM.LIVE	WIND	DEAD	SOIL
B	93	75 / 0	0 / 0	0 / 0	0 / 0	18 / 0	0 / 0
M	173	84 / 0	0 / 0	0 / 0	0 / 0	89 / 0	0 / 0
L	410	258 / 0	0 / 0	0 / 0	0 / 0	152 / 0	0 / 0
K	383	237 / 0	0 / 0	0 / 0	0 / 0	146 / 0	0 / 0
I	168	80 / 0	0 / 0	0 / 0	0 / 0	88 / 0	0 / 0
G	104	84 / 0	0 / 0	0 / 0	0 / 0	20 / 0	0 / 0

BEARING MATERIAL TO BE SPF NO.2 OR BETTER AT JOINT(S) B, M, L, K, I, G

BRACING

TOP CHORD TO BE SHEATHED OR MAX. PURLIN SPACING = 6.25 FT.
MAX. UNBRACED BOTTOM CHORD LENGTH = 10.00 FT OR RIGID CEILING DIRECTLY APPLIED.

ALL PITCH BREAKS AND PERIMETER CORNER JOINTS MUST BE LATERALLY RESTRAINED.

LOADING

TOTAL LOAD CASES: (4)

CHORDS

MEMB. FR-TO	MAX. FACTORED FORCE (LBS)	FACTORED VERT. LOAD LC1 (PLF) FROM	TO	MAX CSI (LC)	MAX. UNBRAC LENGTH
A- B	0 / 10	-78.0	-78.0	0.01 (1)	10.00
B- C	-64 / 0	-78.0	-78.0	0.03 (1)	6.25
C- D	0 / 10	-78.0	-78.0	0.29 (1)	10.00
D- E	0 / 9	-78.0	-78.0	0.29 (1)	10.00
E- F	-24 / 0	-78.0	-78.0	0.29 (1)	6.25
F- G	-84 / 0	-78.0	-78.0	0.03 (1)	6.25
G- H	0 / 10	-78.0	-78.0	0.01 (1)	10.00
B- M	0 / 36	-18.5	-18.5	0.08 (4)	10.00
M- L	0 / 29	-18.5	-18.5	0.10 (4)	10.00
L- K	0 / 24	-18.5	-18.5	0.10 (4)	10.00
K- J	0 / 41	-18.5	-18.5	0.10 (4)	10.00
J- I	0 / 41	-18.5	-18.5	0.10 (4)	10.00
I- G	0 / 48	-18.5	-18.5	0.08 (4)	10.00

WEBS

MEMB. FR-TO	MAX. FACTORED FORCE (LBS)	MAX CSI (LC)
M- C	-157 / 0	0.03 (1)
C- L	-42 / 0	0.02 (1)
L- D	-449 / 0	0.07 (1)
L- E	-37 / 0	0.02 (1)
K- E	-434 / 0	0.07 (1)
K- F	-18 / 0	0.01 (1)
I- F	-149 / 0	0.02 (1)

DESIGN CRITERIA

SPECIFIED LOADS:

TOP CH.	LL	=	21.0	PSF
	DL	=	6.0	PSF
BOT CH.	LL	=	0.0	PSF
	DL	=	7.4	PSF
TOTAL LOAD		=	34.4	PSF

SPACING = 24.0 IN. C/C

LOADING IN FLAT SECTION BASED ON A SLOPE OF 2.00/12 MINIMUM

THIS TRUSS IS DESIGNED FOR RESIDENTIAL OR SMALL BUILDING REQUIREMENTS OF PART 9, NBCC 2010, NBCC 2015

THIS DESIGN COMPLIES WITH:
- PART 9 OF OBC 2012, OBC 2018
- CSA 086-09, CSA 086-14
- TPIC 2011, TPIC 2014

(55 % OF 23.0 P.S.F. G.S.L. PLUS 8.4 P.S.F. RAIN LOAD) EQUALS 21.0 P.S.F. SPECIFIED ROOF LIVE LOAD

CSI: TC=0.29/1.00 (D-E:1) , BC=0.10/1.00 (I-K:4) , WB=0.07/1.00 (D-L:1) , SSI=0.19/1.00 (E-F:1)

DOL LUMBER=1.00 NAIL=1.00 LS BEND=1.10 COMP=1.10 SHEAR=1.10 TENS= 1.10

COMPANION LIVE LOAD FACTOR = 1.00

TRUSS PLATE MANUFACTURER IS NOT RESPONSIBLE FOR QUALITY CONTROL IN THE TRUSS MANUFACTURING PLANT .

NAIL VALUES

PLATE	GRIP(DRY) (PSI) MAX	MIN	SHEAR (PLI) MAX	MIN	SECTION (PLI) MAX	MIN
MT20	618	354	1667	788	1987	1656

PLATE PLACEMENT TOL. = 0.250 inches

PLATE ROTATION TOL. = 5.0 Deg.

JSI GRIP= 0.83 (L) (INPUT = 0.90)
JSI METAL= 0.12 (J) (INPUT = 1.00)

A-18023050

JOB NAME	TRUSS NAME	QUANTITY	PLY	JOB DESC.	DRWG NO.
292566	H6P	2	1	TRUSS DESC.	

Alpa Roof Truss, Maple

Version 8.200 S Jan 6 2018 MiTek Industries, Inc. Thu Feb 15 08:13:00 2018 Page 1

ID:84gOFYESM8s1JmDO6_uSGRyQWjP-Z5DhiOLNzoHXCxT24r?tqM7ImvW5udAYxrBmcFzkz8X

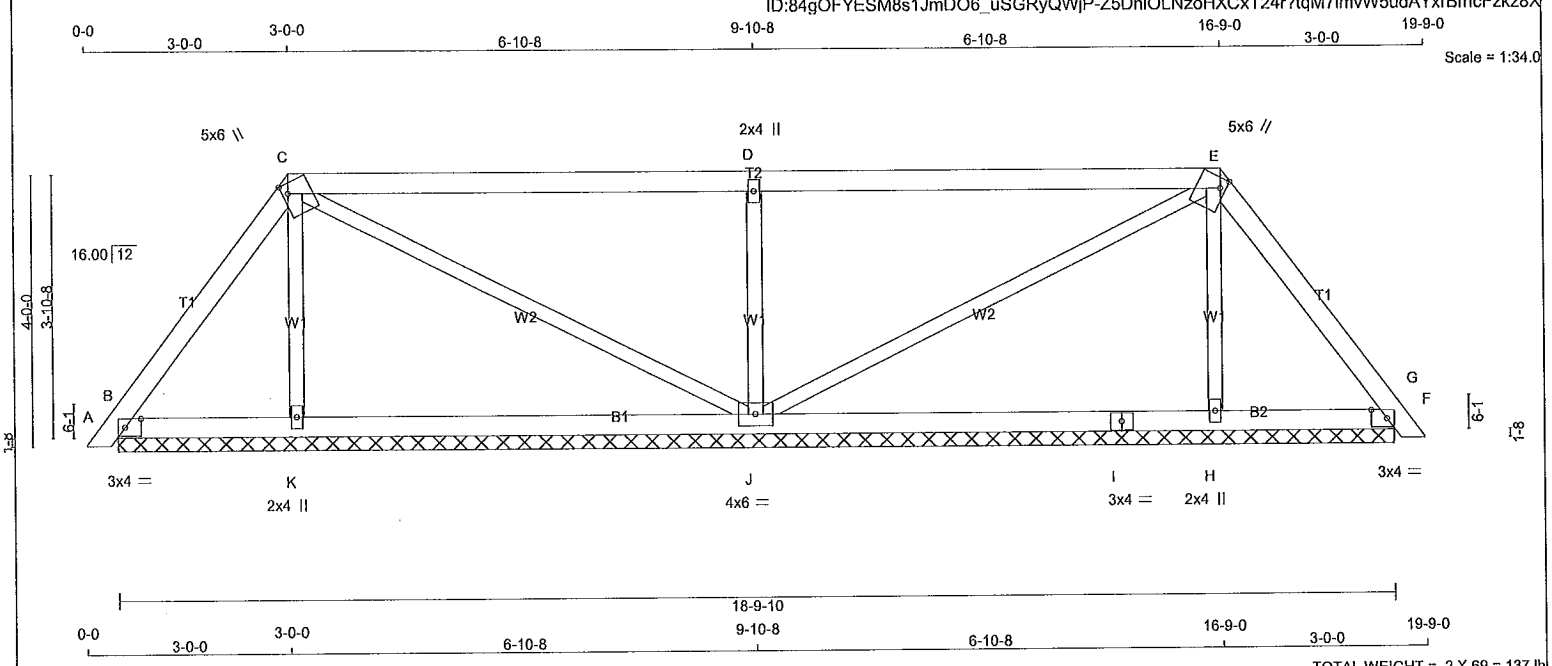

TOTAL WEIGHT = 2 X 69 = 137 lb

[M]

LUMBER

N. L. G. A. RULES

CHORDS	SIZE		LUMBER	DESCR.
A - C	2x4	DRY	No.2	SPF
C - E	2x4	DRY	No.2	SPF
E - G	2x4	DRY	No.2	SPF
B - I	2x4	DRY	No.2	SPF
I - F	2x4	DRY	No.2	SPF
ALL WEBS	2x3	DRY	No.2	SPF

DRY: SEASONED LUMBER.

PLATES (table is in inches)

JT	TYPE	PLATES	W	LEN	Y	X
B	TMB1-I	MT20	3.0	4.0	1.50	2.75
C	TTWW+m	MT20	5.0	6.0	1.75	1.00
D	TMW+w	MT20	2.0	4.0		
E	TTWW+m	MT20	5.0	6.0	1.75	1.00
F	TMB1-I	MT20	3.0	4.0	1.50	2.75
H	BMW1+w	MT20	2.0	4.0		
I	BS-t	MT20	3.0	4.0		
J	BMWWW1-t	MT20	4.0	6.0		
K	BMW1+w	MT20	2.0	4.0		

NOTE: Lateral brace(s) shown shall be 1x4 for Part 9 design as per OBC 9.23.13.11, and no less than 2x4 for Part 4 design

REGISTERED PROFESSIONAL ENGINEER
02/15/2018
EDWIN C. FOK
PROVINCE OF ONTARIO

DIMENSIONS, SUPPORTS AND LOADINGS SPECIFIED BY FABRICATOR TO BE VERIFIED BY BUILDING DESIGNER

BEARINGS

JT	FACTORED GROSS REACTION VERT	HORZ	MAXIMUM FACTORED GROSS REACTION DOWN	HORZ	UPLIFT	INPUT BRG IN-SX	REQRD BRG IN-SX
B	213	0	213	0	0	18-9-10 (4-0-0)	8-0
K	299	0	299	0	0	18-9-10 (4-0-0)	8-0
J	845	0	845	0	0	18-9-10 (4-0-0)	8-0
H	299	0	299	0	0	18-9-10 (4-0-0)	8-0
F	213	0	213	0	0	18-9-10 (4-0-0)	8-0

VALUE IN PARENTHESIS INDICATES EFFECTIVE BEARING LENGTH

UNFACTORED REACTIONS

JT	1ST LCASE COMBINED	MAX./MIN. COMPONENT REACTIONS SNOW	LIVE	PERM.LIVE	WIND	DEAD	SOIL
B	148	112 / 0	0 / 0	0 / 0	0 / 0	36 / 0	0 / 0
K	218	106 / 0	0 / 0	0 / 0	0 / 0	112 / 0	0 / 0
J	600	383 / 0	0 / 0	0 / 0	0 / 0	216 / 0	0 / 0
H	218	106 / 0	0 / 0	0 / 0	0 / 0	112 / 0	0 / 0
F	148	112 / 0	0 / 0	0 / 0	0 / 0	36 / 0	0 / 0

BEARING MATERIAL TO BE SPF NO.2 OR BETTER AT JOINT(S) B, K, J, H, F

BRACING

TOP CHORD TO BE SHEATHED OR MAX. PURLIN SPACING = 6.25 FT.
MAX. UNBRACED BOTTOM CHORD LENGTH = 10.00 FT OR RIGID CEILING DIRECTLY APPLIED.

ALL PITCH BREAKS AND PERIMETER CORNER JOINTS MUST BE LATERALLY RESTRAINED.

LOADING

TOTAL LOAD CASES: (4)

CHORDS

MEMB. FR-TO	MAX. FACTORED FORCE (LBS)	FACTORED VERT. LOAD LC1 (PLF) FROM	TO	MAX CSI (LC)	MAX. UNBRAC LENGTH
A- B	0 / 10	-78.0	-78.0	0.01 (1)	10.00
B- C	-102 / 0	-78.0	-78.0	0.09 (1)	6.25
C- D	-12 / 0	-78.0	-78.0	0.63 (1)	6.25
D- E	-12 / 0	-78.0	-78.0	0.63 (1)	6.25
E- F	-102 / 0	-78.0	-78.0	0.09 (1)	6.25
F- G	0 / 10	-78.0	-78.0	0.01 (1)	10.00
B- K	0 / 59	-18.5	-18.5	0.13 (4)	10.00
K- J	0 / 53	-18.5	-18.5	0.19 (4)	10.00
J- I	0 / 53	-18.5	-18.5	0.19 (4)	10.00
I- H	0 / 53	-18.5	-18.5	0.19 (4)	10.00
H- F	0 / 59	-18.5	-18.5	0.13 (4)	10.00

WEBS

MEMB. FR-TO	MAX. FACTORED FORCE (LBS)	MAX CSI (LC)
K- C	-196 / 0	0.05 (1)
C- J	-46 / 0	0.05 (1)
J- D	-670 / 0	0.16 (1)
J- E	-46 / 0	0.05 (1)
H- E	-196 / 0	0.05 (1)

DESIGN CRITERIA

SPECIFIED LOADS:

TOP CH.	LL	=	21.0	PSF
	DL	=	6.0	PSF
BOT CH.	LL	=	0.0	PSF
	DL	=	7.4	PSF
TOTAL LOAD		=	34.4	PSF

SPACING = 24.0 IN. C/C

LOADING IN FLAT SECTION BASED ON A SLOPE OF 2.00/12 MINIMUM

THIS TRUSS IS DESIGNED FOR RESIDENTIAL OR SMALL BUILDING REQUIREMENTS OF PART 9, NBCC 2010, NBCC 2015

THIS DESIGN COMPLIES WITH:
- PART 9 OF OBC 2012, OBC 2018
- CSA 086-09, CSA 086-14
- TPIC 2011, TPIC 2014

(55 % OF 23.0 P.S.F. G.S.L. PLUS 8.4 P.S.F. RAIN LOAD) EQUALS 21.0 P.S.F. SPECIFIED ROOF LIVE LOAD

CSI: TC=0.63/1.00 (D-E:1) , BC=0.19/1.00 (J-K:4) , WB=0.16/1.00 (D-J:1) , SSI=0.26/1.00 (C-D:1)

DOL LUMBER=1.00 NAIL=1.00 LS BEND=1.10 COMP=1.10 SHEAR=1.10 TENS= 1.10

COMPANION LIVE LOAD FACTOR = 1.00

TRUSS PLATE MANUFACTURER IS NOT RESPONSIBLE FOR QUALITY CONTROL IN THE TRUSS MANUFACTURING PLANT .

NAIL VALUES

PLATE	GRIP(DRY) (PSI) MAX	MIN	SHEAR (PLI) MAX	MIN	SECTION (PLI) MAX	MIN
MT20	618	354	1667	788	1987	1656

PLATE PLACEMENT TOL. = 0.250 Inches

PLATE ROTATION TOL. = 5.0 Deg.

JSI GRIP= 0.72 (J) (INPUT = 0.90)
JSI METAL= 0.14 (D) (INPUT = 1.00)

A-18023051

JOB NAME	TRUSS NAME	QUANTITY	PLY	JOB DESC.	DRWG NO.
292566	H7T	1	1	TRUSS DESC.	

Alpa Roof Truss, Maple

Version 8.200 S Jan 6 2018 MiTek Industries, Inc. Thu Feb 15 08:13:22 2018 Page 1
ID:84gOFYESM8s1JmDO6_uSGRyQWjP-wKY0KvcAnZ3PrJ9HNSO2j?1SLmyP2Run_GWwO_zkz8B

Scale = 1:76.0

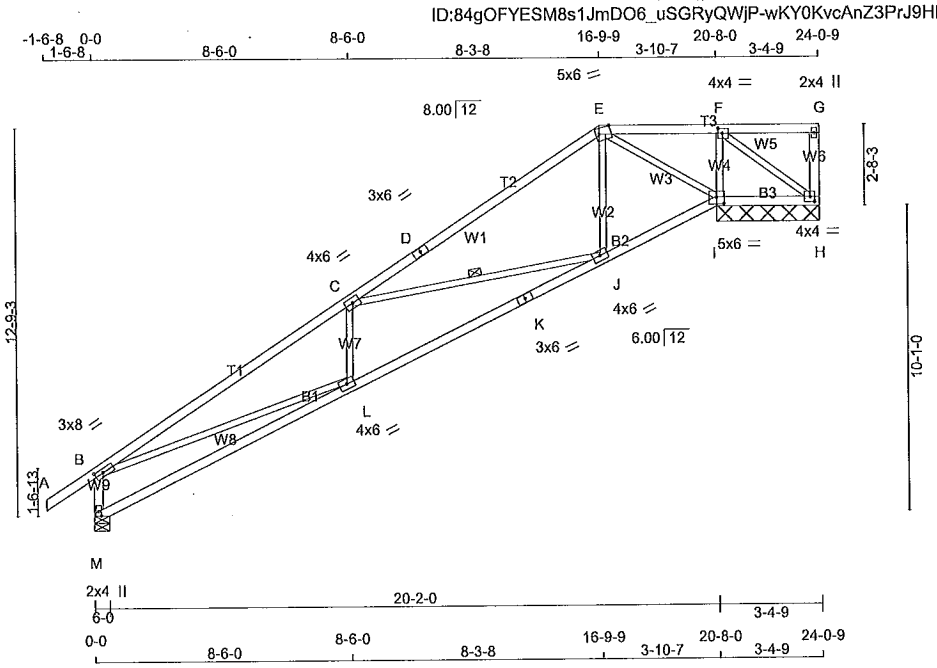

TOTAL WEIGHT = 95 lb
[M]

LUMBER
N. L. G. A. RULES

CHORDS	SIZE		LUMBER	DESCR.
A - D	2x4	DRY	2100F 1.8E	SPF
D - E	2x4	DRY	2100F 1.8E	SPF
E - G	2x4	DRY	No.2	SPF
H - G	2x4	DRY	No.2	SPF
M - B	2x4	DRY	No.2	SPF
M - K	2x4	DRY	No.2	SPF
K - I	2x4	DRY	No.2	SPF
I - H	2x4	DRY	No.2	SPF
ALL WEBS EXCEPT	2x3	DRY	No.2	SPF

DRY: SEASONED LUMBER.

PLATES (table is in inches)

JT	TYPE	PLATES	W	LEN	Y	X
B	TMVW-t	MT20	3.0	8.0	1.50	3.25
C	TMWW-t	MT20	4.0	6.0		
D	TS-t	MT20	3.0	6.0		
E	TTWW-m	MT20	5.0	6.0	Edge	4.75
F	TMWW-t	MT20	4.0	4.0	2.00	1.75
G	TMV+p	MT20	2.0	4.0		
H	BMVW1-t	MT20	4.0	4.0	2.00	1.75
I	BBWW1-l	MT20	5.0	6.0	2.75	3.00
J	BMWW-t	MT20	4.0	6.0		
K	BS-t	MT20	3.0	6.0		
L	BMWW-t	MT20	4.0	6.0		
M	BMV1+p	MT20	2.0	4.0	Edge	

Edge - INDICATES REFERENCE CORNER OF PLATE TOUCHES EDGE OF CHORD.

NOTE: Lateral brace(s) shown shall be 1x4 for Part 9 design as per OBC 9.23.13.11, and no less than 2x4 for Part 4 design

REGISTERED PROFESSIONAL ENGINEER
02/15/2018
EDWIN C. FOK
PROVINCE OF ONTARIO

DIMENSIONS, SUPPORTS AND LOADINGS SPECIFIED BY FABRICATOR TO BE VERIFIED BY BUILDING DESIGNER

BEARINGS

JT	FACTORED GROSS REACTION VERT	HORZ	MAXIMUM FACTORED GROSS REACTION DOWN	HORZ	UPLIFT	INPUT BRG IN-SX	REQRD BRG IN-SX
H	-506	0	0	0	-506	3-4-9 (3-4-9)	2-5-10
I	1938	0	1938	0	0	3-4-9 (3-4-9)	2-5-10
M	1014	0	1014	0	0	6-0	1-8

VALUE IN PARENTHESIS INDICATES EFFECTIVE BEARING LENGTH

PROVIDE ANCHORAGE AT BEARING JOINT H FOR 506 LBS FACTORED UPLIFT

NOTE: ANCHORAGE REQUIRED FOR LARGE UPLIFT FORCES, SHALL BE PROVIDED BY BUILDG. DESIGNER

UNFACTORED REACTIONS

JT	1ST LCASE COMBINED	MAX./MIN. COMPONENT REACTIONS SNOW	LIVE	PERM.LIVE	WIND	DEAD	SOIL
H	-360	0 / -223	0 / 0	0 / 0	0 / 0	0 / -137	0 / 0
I	1381	847 / 0	0 / 0	0 / 0	0 / 0	534 / 0	0 / 0
M	720	454 / 0	0 / 0	0 / 0	0 / 0	267 / 0	0 / 0

BEARING MATERIAL TO BE SPF NO.2 OR BETTER AT JOINT(S) H, I, M

BRACING
TOP CHORD TO BE SHEATHED OR MAX. PURLIN SPACING = 4.74 FT.
MAX. UNBRACED BOTTOM CHORD LENGTH = 6.25 FT OR RIGID CEILING DIRECTLY APPLIED.

ALL PITCH BREAKS AND PERIMETER CORNER JOINTS MUST BE LATERALLY RESTRAINED.

1 LATERAL BRACE(S) AT 1/ 2 LENGTH OF C-J.

END VERTICAL(S) MUST BE SHEATHED OR HAVE BRACES AS INDICATED IN THE MAX. UNBRACED LENGTH COLUMN OF THE TABLE BELOW

LOADING
TOTAL LOAD CASES: (4)

CHORDS

MEMB. FR-TO	MAX. FACTORED FORCE (LBS)	FACTORED VERT. LOAD LC1 (PLF) FROM	TO	MAX CSI (LC)	MAX. UNBRAC LENGTH
A- B	0 / 35	-78.0	-78.0	0.09 (1)	10.00
B- C	-1968 / 0	-78.0	-78.0	0.87 (1)	4.74
C- D	-413 / 0	-78.0	-78.0	0.62 (1)	6.25
D- E	-413 / 0	-78.0	-78.0	0.62 (1)	6.25
E- F	0 / 890	-78.0	-78.0	0.36 (1)	10.00
F- G	0 / 0	-78.0	-78.0	0.22 (1)	10.00
H- G	-79 / 0	0.0	0.0	0.01 (1)	7.81
M- B	-948 / 0	0.0	0.0	0.10 (1)	7.81
M- L	0 / 8	-18.5	-18.5	0.32 (4)	10.00
L- K	0 / 1864	-18.5	-18.5	0.50 (4)	10.00
K- J	0 / 1864	-18.5	-18.5	0.50 (4)	10.00
J- I	0 / 350	-18.5	-18.5	0.20 (4)	10.00
I- H	-847 / 0	-18.5	-18.5	0.07 (4)	6.25

WEBS

MEMB. FR-TO	MAX. FACTORED FORCE (LBS)	MAX CSI (LC)
L- C	-112 / 89	0.03 (4)
C- J	-1378 / 0	0.71 (1)
J- E	0 / 591	0.13 (1)
E- I	-1421 / 0	0.48 (1)
I- F	-994 / 0	0.16 (1)
F- H	0 / 1049	0.24 (1)
B- L	0 / 1760	0.40 (1)

DESIGN CRITERIA

SPECIFIED LOADS:

TOP CH.	LL	=	21.0	PSF
	DL	=	6.0	PSF
BOT CH.	LL	=	0.0	PSF
	DL	=	7.4	PSF
TOTAL LOAD		=	34.4	PSF

SPACING = 24.0 IN. C/C

LOADING IN FLAT SECTION BASED ON A SLOPE OF 2.00/12 MINIMUM

THIS TRUSS IS DESIGNED FOR RESIDENTIAL OR SMALL BUILDING REQUIREMENTS OF PART 9, NBCC 2010, NBCC 2015

THIS DESIGN COMPLIES WITH:
- PART 9 OF OBC 2012, OBC 2018
- CSA 086-09, CSA 086-14
- TPIC 2011, TPIC 2014

(55 % OF 23.0 P.S.F. G.S.L. PLUS 8.4 P.S.F. RAIN LOAD) EQUALS 21.0 P.S.F. SPECIFIED ROOF LIVE LOAD

ALLOWABLE DEFL.(LL)= L/360 (0.69")
CALCULATED VERT. DEFL.(LL) = L/ 999 (0.10")
ALLOWABLE DEFL.(TL)= L/360 (0.69")
CALCULATED VERT. DEFL.(TL) = L/ 932 (0.27")

CSI: TC=0.87/1.00 (B-C:1) , BC=0.50/1.00 (J-L:4) , WB=0.71/1.00 (C-J:1) , SSI=0.26/1.00 (B-C:1)

DOL LUMBER=1.00 NAIL=1.00 LS BEND=1.10 COMP=1.10 SHEAR=1.10 TENS= 1.10

COMPANION LIVE LOAD FACTOR = 1.00

TRUSS PLATE MANUFACTURER IS NOT RESPONSIBLE FOR QUALITY CONTROL IN THE TRUSS MANUFACTURING PLANT .

NAIL VALUES

PLATE	GRIP(DRY) (PSI) MAX	MIN	SHEAR (PLI) MAX	MIN	SECTION (PLI) MAX	MIN
MT20	618	354	1667	788	1987	1656

PLATE PLACEMENT TOL. = 0.250 inches

PLATE ROTATION TOL. = 5.0 Deg.

JSI GRIP= 0.89 (F) (INPUT = 0.90)
JSI METAL= 0.65 (K) (INPUT = 1.00)

A-18023052

JOB NAME	TRUSS NAME	QUANTITY	PLY	JOB DESC.	DRWG NO.
292566	H8T	1	1	TRUSS DESC.	

Alpa Roof Truss, Maple

Version 8.200 S Jan 6 2018 MiTek Industries, Inc. Thu Feb 15 08:13:30 2018 Page 1
ID:84gOFYESM8s1JmDO6_uSGRyQWjP-ht11?elBv03HoYmpr8Yw2hMrr?g_v3jzqVSLgWzkz83

Scale = 1:92.1

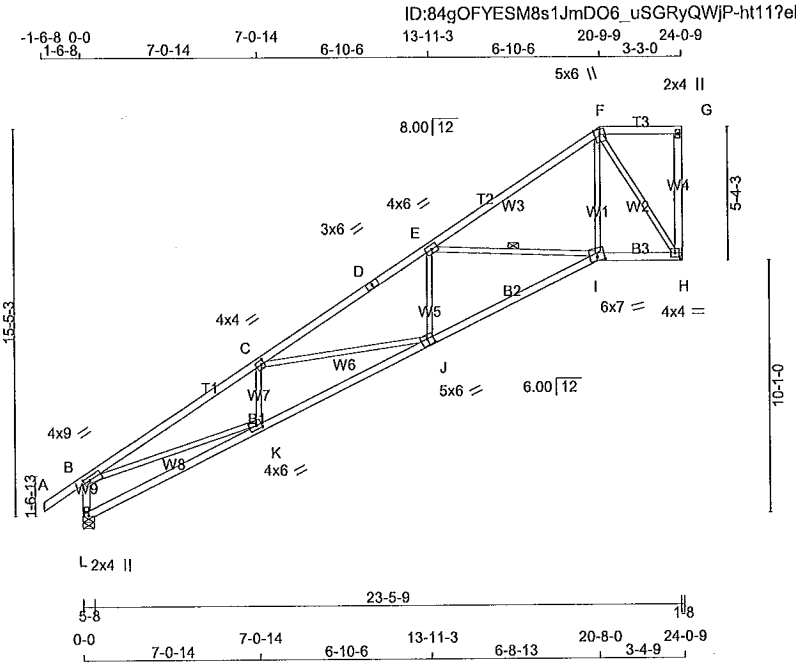

TOTAL WEIGHT = 102 lb

[M][F]

LUMBER

N. L. G. A. RULES

CHORDS	SIZE		LUMBER	DESCR.
A - D	2x4	DRY	No.2	SPF
D - F	2x4	DRY	No.2	SPF
F - G	2x4	DRY	No.2	SPF
H - G	2x4	DRY	No.2	SPF
L - B	2x4	DRY	No.2	SPF
L - J	2x4	DRY	No.2	SPF
J - I	2x4	DRY	No.2	SPF
I - H	2x4	DRY	No.2	SPF
ALL WEBS EXCEPT	2x3	DRY	No.2	SPF

DRY: SEASONED LUMBER.

PLATES (table is in inches)

JT	TYPE	PLATES	W	LEN	Y	X
B	TMVW-t	MT20	4.0	9.0	1.75	3.00
C	TMWW-t	MT20	4.0	4.0	2.00	1.50
D	TS-t	MT20	3.0	6.0		
E	TMWW-t	MT20	4.0	6.0		
F	TTWW+m	MT20	5.0	6.0	Edge	
G	TMV+p	MT20	2.0	4.0		
H	BMVW1-t	MT20	4.0	4.0		
I	BBWMW-m	MT20	6.0	7.0	1.75	3.50
J	BSWW-l	MT20	5.0	6.0	3.00	3.00
K	BMWW-t	MT20	4.0	6.0	1.75	2.50
L	BMV1+p	MT20	2.0	4.0	Edge	

Edge - INDICATES REFERENCE CORNER OF PLATE TOUCHES EDGE OF CHORD.

NOTE: Lateral brace(s) shown shall be 1x4 for Part 9 design as per OBC 9.23.13.11, and no less than 2x4 for Part 4 design

REGISTERED PROFESSIONAL ENGINEER
02/15/2018
EDWIN C. FOK
PROVINCE OF ONTARIO

DIMENSIONS, SUPPORTS AND LOADINGS SPECIFIED BY FABRICATOR TO BE VERIFIED BY BUILDING DESIGNER

BEARINGS

JT	FACTORED GROSS REACTION VERT	HORZ	MAXIMUM FACTORED GROSS REACTION DOWN	HORZ	UPLIFT	INPUT BRG IN-SX	REQRD BRG IN-SX
H	1160	0	1160	0	0	HANGER BY OTHERS MIN. SEAT SIZE: 1-8	
L	1286	0	1286	0	0	5-8	1-11

UNFACTORED REACTIONS

JT	1ST LCASE COMBINED	MAX./MIN. COMPONENT REACTIONS SNOW	LIVE	PERM.LIVE	WIND	DEAD	SOIL
H	827	505 / 0	0 / 0	0 / 0	0 / 0	322 / 0	0 / 0
L	914	573 / 0	0 / 0	0 / 0	0 / 0	342 / 0	0 / 0

BEARING MATERIAL TO BE SPF NO.2 OR BETTER AT JOINT(S) L

BRACING

TOP CHORD TO BE SHEATHED OR MAX. PURLIN SPACING = 3.53 FT.
MAX. UNBRACED BOTTOM CHORD LENGTH = 10.00 FT OR RIGID CEILING DIRECTLY APPLIED.

ALL PITCH BREAKS AND PERIMETER CORNER JOINTS MUST BE LATERALLY RESTRAINED.

1 LATERAL BRACE(S) AT 1/ 2 LENGTH OF E-I.

END VERTICAL(S) MUST BE SHEATHED OR HAVE BRACES AS INDICATED IN THE MAX. UNBRACED LENGTH COLUMN OF THE TABLE BELOW

LOADING

TOTAL LOAD CASES: (4)

CHORDS

MEMB. FR-TO	MAX. FACTORED FORCE (LBS)	FACTORED VERT. LOAD LC1 (PLF) FROM	TO	MAX CSI (LC)	MAX. UNBRAC LENGTH
A- B	0 / 35	-78.0	-78.0	0.15 (1)	10.00
B- C	-2796 / 0	-78.0	-78.0	0.78 (1)	3.53
C- D	-2260 / 0	-78.0	-78.0	0.56 (1)	4.09
D- E	-2260 / 0	-78.0	-78.0	0.56 (1)	4.09
E- F	-841 / 0	-78.0	-78.0	0.46 (1)	6.01
F- G	0 / 0	-78.0	-78.0	0.14 (1)	10.00
H- G	-127 / 0	0.0	0.0	0.06 (1)	7.81
L- B	-1230 / 0	0.0	0.0	0.13 (1)	7.23
L- K	0 / 7	-18.5	-18.5	0.23 (4)	10.00
K- J	0 / 2609	-18.5	-18.5	0.52 (1)	10.00
J- I	0 / 2102	-18.5	-18.5	0.48 (1)	10.00
I- H	0 / 646	-18.5	-18.5	0.14 (1)	10.00

WEBS

MEMB. FR-TO	MAX. FACTORED FORCE (LBS)	MAX CSI (LC)
K- C	-330 / 0	0.06 (1)
C- J	-460 / 0	0.44 (1)
J- E	0 / 294	0.07 (4)
E- I	-1209 / 0	0.39 (1)
I- F	0 / 1113	0.25 (1)
F- H	-1194 / 0	0.72 (1)
B- K	0 / 2448	0.55 (1)

DESIGN CRITERIA

SPECIFIED LOADS:

TOP CH.	LL	=	21.0	PSF
	DL	=	6.0	PSF
BOT CH.	LL	=	0.0	PSF
	DL	=	7.4	PSF
TOTAL LOAD		=	34.4	PSF

SPACING = 24.0 IN. C/C

LOADING IN FLAT SECTION BASED ON A SLOPE OF 2.00/12 MINIMUM

THIS TRUSS IS DESIGNED FOR RESIDENTIAL OR SMALL BUILDING REQUIREMENTS OF PART 9, NBCC 2010, NBCC 2015

THIS DESIGN COMPLIES WITH:
- PART 9 OF OBC 2012, OBC 2018
- CSA 086-09, CSA 086-14
- TPIC 2011, TPIC 2014

(55 % OF 23.0 P.S.F. G.S.L. PLUS 8.4 P.S.F. RAIN LOAD) EQUALS 21.0 P.S.F. SPECIFIED ROOF LIVE LOAD

ALLOWABLE DEFL.(LL)= L/360 (0.80")
CALCULATED VERT. DEFL.(LL) = L/ 999 (0.15")
ALLOWABLE DEFL.(TL)= L/360 (0.80")
CALCULATED VERT. DEFL.(TL) = L/ 863 (0.33")

CSI: TC=0.78/1.00 (B-C:1) , BC=0.52/1.00 (J-K:1) , WB=0.72/1.00 (F-H:1) , SSI=0.21/1.00 (B-C:1)

DOL LUMBER=1.00 NAIL=1.00 LS BEND=1.10 COMP=1.10 SHEAR=1.10 TENS= 1.10

COMPANION LIVE LOAD FACTOR = 1.00

TRUSS PLATE MANUFACTURER IS NOT RESPONSIBLE FOR QUALITY CONTROL IN THE TRUSS MANUFACTURING PLANT .

NAIL VALUES

PLATE	GRIP(DRY) (PSI) MAX	MIN	SHEAR (PLI) MAX	MIN	SECTION (PLI) MAX	MIN
MT20	618	354	1667	788	1987	1656

PLATE PLACEMENT TOL. = 0.250 inches

PLATE ROTATION TOL. = 5.0 Deg.

JSI GRIP= 0.89 (K) (INPUT = 0.90)
JSI METAL= 0.64 (K) (INPUT = 1.00)

A-18023053

JOB NAME	TRUSS NAME	QUANTITY	PLY	JOB DESC.	DRWG NO.
292566	H9T	8	1	TRUSS DESC.	

Alpa Roof Truss, Maple

Version 8.200 S Jan 6 2018 MiTek Industries, Inc. Thu Feb 15 08:13:44 2018 Page 1
ID:84gOFYESM8s1JmDO6_uSGRyQWjP-HZtKxRtzcJqHUhqWf4oCcexFUeSEBOW12hr59izkz7r

Scale = 1:100.8

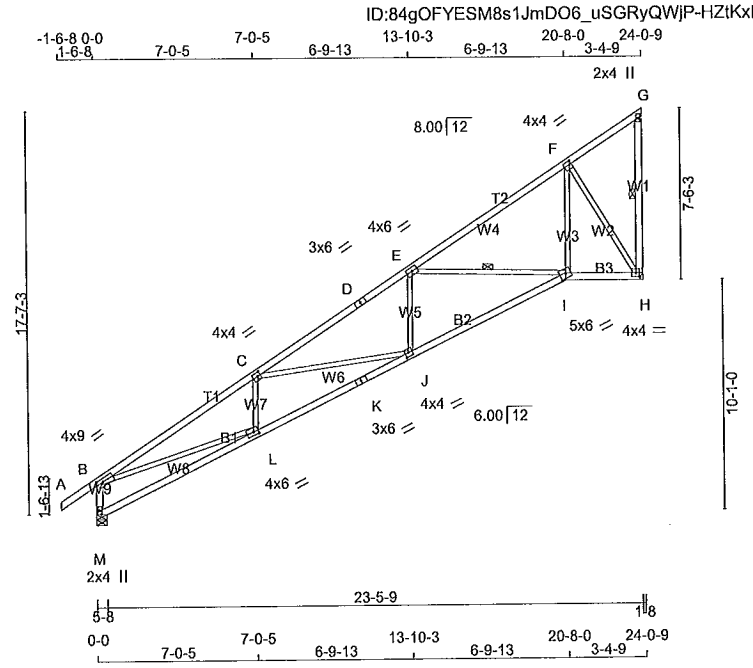

TOTAL WEIGHT = 8 X 105 = 839 lb

[M][F]

LUMBER

N. L. G. A. RULES

CHORDS	SIZE		LUMBER	DESCR.
M - B	2x4	DRY	No.2	SPF
A - D	2x4	DRY	No.2	SPF
D - G	2x4	DRY	No.2	SPF
H - G	2x4	DRY	No.2	SPF
M - K	2x4	DRY	No.2	SPF
K - I	2x4	DRY	No.2	SPF
I - H	2x4	DRY	No.2	SPF
ALL WEBS	2x3	DRY	No.2	SPF

DRY: SEASONED LUMBER.

PLATES (table is in Inches)

JT	TYPE	PLATES	W	LEN	Y	X
B	TMVW-t	MT20	4.0	9.0	1.75	3.00
C	TMWW-t	MT20	4.0	4.0	2.00	1.50
D	TS-t	MT20	3.0	6.0		
E	TMWW-t	MT20	4.0	6.0		
F	TMWW-t	MT20	4.0	4.0	1.75	1.00
G	TMV+p	MT20	2.0	4.0		
H	BMVW1-t	MT20	4.0	4.0	2.00	1.75
I	BBWW-h	MT20	5.0	6.0	2.50	3.25
J	BMWW-t	MT20	4.0	4.0	2.00	1.75
K	BS-t	MT20	3.0	6.0		
L	BMWW-t	MT20	4.0	6.0	1.75	2.50
M	BMV1+p	MT20	2.0	4.0	Edge	

Edge - INDICATES REFERENCE CORNER OF PLATE TOUCHES EDGE OF CHORD.

NOTE: Lateral brace(s) shown shall be 1x4 for Part 9 design as per OBC 9.23.13.11, and no less than 2x4 for Part 4 design

REGISTERED PROFESSIONAL ENGINEER
02/15/2018
EDWIN C. FOK
PROVINCE OF ONTARIO

DIMENSIONS, SUPPORTS AND LOADINGS SPECIFIED BY FABRICATOR TO BE VERIFIED BY BUILDING DESIGNER

BEARINGS

JT	FACTORED GROSS REACTION VERT	HORZ	MAXIMUM FACTORED GROSS REACTION DOWN	HORZ	UPLIFT	INPUT BRG IN-SX	REQRD BRG IN-SX
M	1286	0	1286	0	0	5-8	1-11
H	1160	0	1160	0	0	HANGER BY OTHERS	
						MIN. SEAT SIZE: 1-8	

UNFACTORED REACTIONS

JT	1ST LCASE COMBINED	MAX./MIN. COMPONENT REACTIONS SNOW	LIVE	PERM.LIVE	WIND	DEAD	SOIL
M	914	573 / 0	0 / 0	0 / 0	0 / 0	342 / 0	0 / 0
H	827	505 / 0	0 / 0	0 / 0	0 / 0	322 / 0	0 / 0

BEARING MATERIAL TO BE SPF NO.2 OR BETTER AT JOINT(S) M

BRACING

TOP CHORD TO BE SHEATHED OR MAX. PURLIN SPACING = 3.56 FT.
MAX. UNBRACED BOTTOM CHORD LENGTH = 10.00 FT OR RIGID CEILING DIRECTLY APPLIED.

ALL PITCH BREAKS AND PERIMETER CORNER JOINTS MUST BE LATERALLY RESTRAINED.

1 LATERAL BRACE(S) AT 1/ 2 LENGTH OF G-H, E-I.

END VERTICAL(S) MUST BE SHEATHED OR HAVE BRACES AS INDICATED IN THE MAX. UNBRACED LENGTH COLUMN OF THE TABLE BELOW

LOADING

TOTAL LOAD CASES: (4)

CHORDS

MEMB. FR-TO	MAX. FACTORED FORCE (LBS)	FACTORED VERT. LOAD LC1 (PLF) FROM	TO	MAX CSI (LC)	MAX. UNBRAC LENGTH
M- B	-1228 / 0	0.0	0.0	0.13 (1)	7.23
A- B	0 / 35	-78.0	-78.0	0.15 (1)	10.00
B- C	-2789 / 0	-78.0	-78.0	0.77 (1)	3.56
C- D	-2283 / 0	-78.0	-78.0	0.56 (1)	4.07
D- E	-2283 / 0	-78.0	-78.0	0.56 (1)	4.07
E- F	-878 / 0	-78.0	-78.0	0.36 (1)	6.10
F- G	-42 / 0	-78.0	-78.0	0.26 (1)	6.25
H- G	-53 / 0	0.0	0.0	0.01 (1)	6.25
M- L	0 / 5	-18.5	-18.5	0.19 (4)	10.00
L- K	0 / 2609	-18.5	-18.5	0.52 (1)	10.00
K- J	0 / 2609	-18.5	-18.5	0.52 (1)	10.00
J- I	0 / 2113	-18.5	-18.5	0.44 (1)	10.00
I- H	0 / 704	-18.5	-18.5	0.15 (1)	10.00

WEBS

MEMB. FR-TO	MAX. FACTORED FORCE (LBS)	MAX CSI (LC)
B- L	0 / 2442	0.55 (1)
L- C	-349 / 0	0.06 (1)
C- J	-439 / 0	0.41 (1)
J- E	0 / 312	0.08 (4)
E- I	-1171 / 0	0.39 (1)
I- F	0 / 1097	0.25 (1)
F- H	-1287 / 0	0.77 (1)

DESIGN CRITERIA

SPECIFIED LOADS:

TOP CH.	LL	=	21.0	PSF
	DL	=	6.0	PSF
BOT CH.	LL	=	0.0	PSF
	DL	=	7.4	PSF
TOTAL LOAD		=	34.4	PSF

SPACING = 24.0 IN. C/C

THIS TRUSS IS DESIGNED FOR RESIDENTIAL OR SMALL BUILDING REQUIREMENTS OF PART 9, NBCC 2010, NBCC 2015

THIS DESIGN COMPLIES WITH:
- PART 9 OF OBC 2012, OBC 2018
- CSA 086-09, CSA 086-14
- TPIC 2011, TPIC 2014

(55 % OF 23.0 P.S.F. G.S.L. PLUS 8.4 P.S.F. RAIN LOAD) EQUALS 21.0 P.S.F. SPECIFIED ROOF LIVE LOAD

ALLOWABLE DEFL.(LL)= L/360 (0.80")
CALCULATED VERT. DEFL.(LL) = L/ 999 (0.15")
ALLOWABLE DEFL.(TL)= L/360 (0.80")
CALCULATED VERT. DEFL.(TL) = L/ 957 (0.30")

CSI: TC=0.77/1.00 (B-C:1) , BC=0.52/1.00 (J-L:1) , WB=0.77/1.00 (F-H:1) , SSI=0.21/1.00 (B-C:1)

DOL LUMBER=1.00 NAIL=1.00 LS BEND=1.10 COMP=1.10 SHEAR=1.10 TENS= 1.10

COMPANION LIVE LOAD FACTOR = 1.00

TRUSS PLATE MANUFACTURER IS NOT RESPONSIBLE FOR QUALITY CONTROL IN THE TRUSS MANUFACTURING PLANT .

NAIL VALUES

PLATE	GRIP(DRY) (PSI) MAX	MIN	SHEAR (PLI) MAX	MIN	SECTION (PLI) MAX	MIN
MT20	618	354	1667	788	1987	1656

PLATE PLACEMENT TOL. = 0.250 inches

PLATE ROTATION TOL. = 5.0 Deg.

JSI GRIP= 0.89 (L) (INPUT = 0.90)
JSI METAL= 0.80 (K) (INPUT = 1.00)

A-18023054

JOB NAME	TRUSS NAME	QUANTITY	PLY	JOB DESC.	DRWG NO.
292566	H10	6	1	TRUSS DESC.	

Alpa Roof Truss, Maple

Version 8.200 S Jan 6 2018 MiTek Industries, Inc. Thu Feb 15 08:13:59 2018 Page 1
ID:84gOFYESM8s1JmDO6_uSGRyQWjP-LSH?5Z3N3wj9n?UO2kZjjp3tfhZUCGZEVW_OBLzkz7c

Scale = 1:58.2

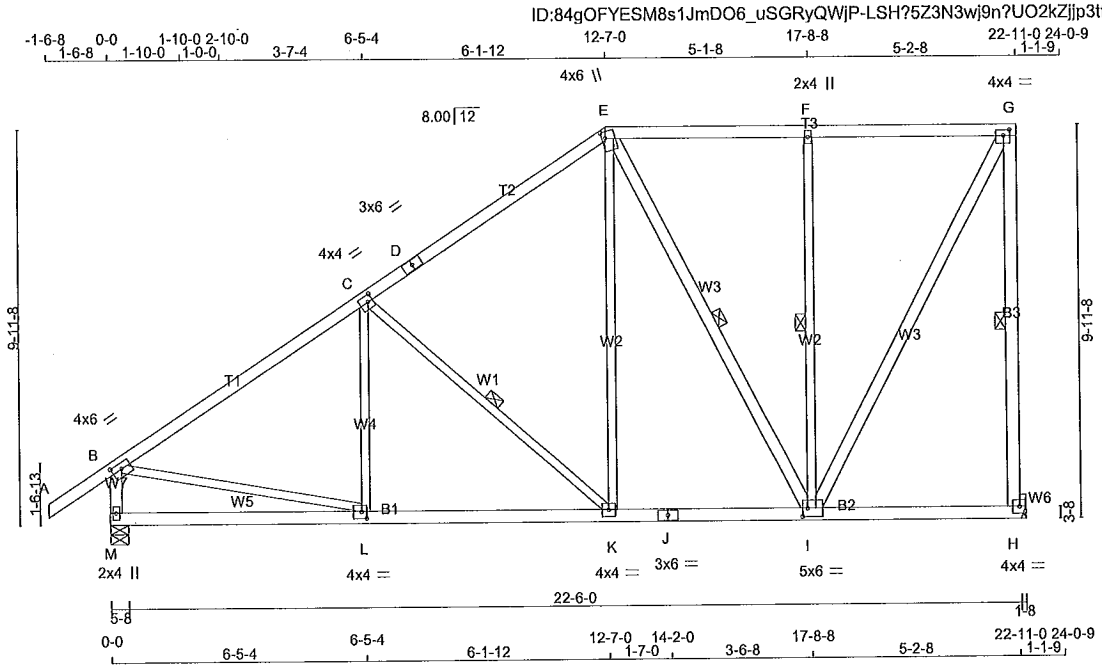

TOTAL WEIGHT = 6 X 125 = 750 lb
[M][F]

LUMBER
N. L. G. A. RULES

CHORDS	SIZE		LUMBER	DESCR.
M - B	2x4	DRY	No.2	SPF
A - D	2x4	DRY	No.2	SPF
D - E	2x4	DRY	No.2	SPF
E - G	2x4	DRY	No.2	SPF
M - J	2x4	DRY	No.2	SPF
J - H	2x4	DRY	No.2	SPF
H - G	2x4	DRY	No.2	SPF
ALL WEBS EXCEPT	2x3	DRY	No.2	SPF
E - I	2x4	DRY	No.2	SPF
I - G	2x4	DRY	No.2	SPF

DRY: SEASONED LUMBER.

PLATES (table Is In Inches)

JT	TYPE	PLATES	W	LEN	Y	X
B	TMVW-t	MT20	4.0	6.0	1.75	3.00
C	TMWW-t	MT20	4.0	4.0	2.00	1.50
D	TS-t	MT20	3.0	6.0		
E	TTWW+m	MT20	4.0	6.0	2.00	1.00
F	TMW+w	MT20	2.0	4.0		
G	TMVW-t	MT20	4.0	4.0	1.75	1.75
H	BMVW1-t	MT20	4.0	4.0		
I	BMWWW-t	MT20	5.0	6.0	2.50	1.50
J	BS-t	MT20	3.0	6.0		
K	BMWW-t	MT20	4.0	4.0		
L	BMWW-t	MT20	4.0	4.0	2.00	1.50
M	BMV1+p	MT20	2.0	4.0		

NOTE: Lateral brace(s) shown shall be 1x4 for Part 9 design as per OBC 9.23.13.11, and no less than 2x4 for Part 4 design

REGISTERED PROFESSIONAL ENGINEER
02/15/2018
EDWIN C. FOK
PROVINCE OF ONTARIO

DIMENSIONS, SUPPORTS AND LOADINGS SPECIFIED BY FABRICATOR TO BE VERIFIED BY BUILDING DESIGNER

BEARINGS

JT	FACTORED GROSS REACTION VERT	HORZ	MAXIMUM FACTORED GROSS REACTION DOWN	HORZ	UPLIFT	INPUT BRG IN-SX	REQRD BRG IN-SX
M	1242	0	1242	0	0	5-8	1-13
H	1158	0	1158	0	0	HANGER BY OTHERS MIN. SEAT SIZE: 1-8	

UNFACTORED REACTIONS

JT	1ST LCASE COMBINED	MAX./MIN. COMPONENT REACTIONS SNOW	LIVE	PERM.LIVE	WIND	DEAD	SOIL
M	884	546 / 0	0 / 0	0 / 0	0 / 0	338 / 0	0 / 0
H	831	478 / 0	0 / 0	0 / 0	0 / 0	353 / 0	0 / 0

BEARING MATERIAL TO BE SPF NO.2 OR BETTER AT JOINT(S) M

BRACING
FOR SECTION E-G, MAX. PURLIN SPACING = 2.00 FT.
FOR OTHER SECTIONS, TOP CHORD TO BE SHEATHED OR MAX. PURLIN SPACING = 5.30 FT.
MAX. UNBRACED BOTTOM CHORD LENGTH = 5.99 FT OR RIGID CEILING DIRECTLY APPLIED.

ALL PITCH BREAKS AND PERIMETER CORNER JOINTS MUST BE LATERALLY RESTRAINED.

1 LATERAL BRACE(S) AT 1/ 2 LENGTH OF C-K, E-I, F-I.

END VERTICAL(S) MUST BE SHEATHED OR HAVE BRACES AS INDICATED IN THE MAX. UNBRACED LENGTH COLUMN OF THE TABLE BELOW

LOADING
TOTAL LOAD CASES: (4)

CHORDS

MEMB. FR-TO	MAX. FACTORED FORCE (LBS)	FACTORED VERT. LOAD LC1 (PLF) FROM	TO	MAX CSI (LC)	MAX. UNBRAC LENGTH
M- B	-1194 / 0	0.0	0.0	0.13 (1)	7.32
A- B	0 / 35	-78.0	-78.0	0.15 (1)	10.00
B- C	-1190 / 0	-78.0	-78.0	0.45 (1)	5.30
C- D	-832 / 0	-78.0	-78.0	0.41 (1)	6.10
D- E	-832 / 0	-78.0	-78.0	0.41 (1)	6.10
E- F	-500 / 0	-85.5	-85.5	0.28 (1)	2.00
F- G	-500 / 0	-85.5	-85.5	0.28 (1)	2.00
M- L	0 / 0	-18.5	-18.5	0.18 (4)	10.00
L- K	0 / 1017	-18.5	-18.5	0.29 (4)	10.00
K- J	0 / 668	-18.5	-18.5	0.18 (4)	10.00
J- I	0 / 668	-18.5	-18.5	0.18 (4)	10.00
I- H	0 / 0	-18.5	-18.5	0.11 (4)	10.00
H- G	-1119 / 0	0.0	0.0	0.54 (1)	5.99

WEBS

MEMB. FR-TO	MAX. FACTORED FORCE (LBS)	MAX CSI (LC)
K- E	0 / 413	0.09 (1)
B- L	0 / 1036	0.23 (1)
L- C	-63 / 73	0.03 (1)
C- K	-472 / 0	0.22 (1)
E- I	-357 / 0	0.23 (1)
I- F	-538 / 0	0.36 (1)
I- G	0 / 1078	0.17 (1)

DESIGN CRITERIA

SPECIFIED LOADS:

TOP CH.	LL	=	21.0	PSF
	DL	=	6.0	PSF
BOT CH.	LL	=	0.0	PSF
	DL	=	7.4	PSF
TOTAL LOAD		=	34.4	PSF

SPACING = 24.0 IN. C/C

LOADING IN FLAT SECTION BASED ON PIGGYBACK TRUSS WITH SLOPES OF 6.00/12 AND -6.00/12 AND RESPECTIVE WALL HEIGHTS OF 0-0 AND 0-0 AND AN ADDITIONAL DEAD LOAD OF 3.0 P.S.F.

THIS TRUSS IS DESIGNED FOR RESIDENTIAL OR SMALL BUILDING REQUIREMENTS OF PART 9, NBCC 2010, NBCC 2015

THIS DESIGN COMPLIES WITH:
- PART 9 OF OBC 2012, OBC 2018
- CSA 086-09, CSA 086-14
- TPIC 2011, TPIC 2014

(55 % OF 23.0 P.S.F. G.S.L. PLUS 8.4 P.S.F. RAIN LOAD) EQUALS 21.0 P.S.F. SPECIFIED ROOF LIVE LOAD

ALLOWABLE DEFL.(LL)= L/360 (0.76")
CALCULATED VERT. DEFL.(LL) = L/ 999 (0.03")
ALLOWABLE DEFL.(TL)= L/360 (0.76")
CALCULATED VERT. DEFL.(TL) = L/ 999 (0.08")

CSI: TC=0.45/1.00 (B-C:1) , BC=0.54/1.00 (G-H:1) , WB=0.36/1.00 (F-I:1) , SSI=0.21/1.00 (E-F:1)

DOL LUMBER=1.00 NAIL=1.00 LS BEND=1.10 COMP=1.10 SHEAR=1.10 TENS= 1.10

COMPANION LIVE LOAD FACTOR = 1.00

TRUSS PLATE MANUFACTURER IS NOT RESPONSIBLE FOR QUALITY CONTROL IN THE TRUSS MANUFACTURING PLANT .

NAIL VALUES

PLATE	GRIP(DRY) (PSI) MAX	MIN	SHEAR (PLI) MAX	MIN	SECTION (PLI) MAX	MIN
MT20	618	354	1667	788	1987	1656

PLATE PLACEMENT TOL. = 0.250 inches

PLATE ROTATION TOL. = 5.0 Deg.

JSI GRIP= 0.89 (E) (INPUT = 0.90)
JSI METAL= 0.38 (L) (INPUT = 1.00)

A-18023055

JOB NAME	TRUSS NAME	QUANTITY	PLY	JOB DESC.	DRWG NO.
292566	H10G	1	1	TRUSS DESC.	

Alpa Roof Truss, Maple

Version 8.200 S Jan 6 2018 MiTek Industries, Inc. Thu Feb 15 08:14:05 2018 Page 1

ID:84gOFYESM8s1JmDO6_uSGRyQWjP-9ceGLc78fmUJVwxYO_g7z4JyA6k0c196tSRiP_zkz7W

Scale = 1:59.3

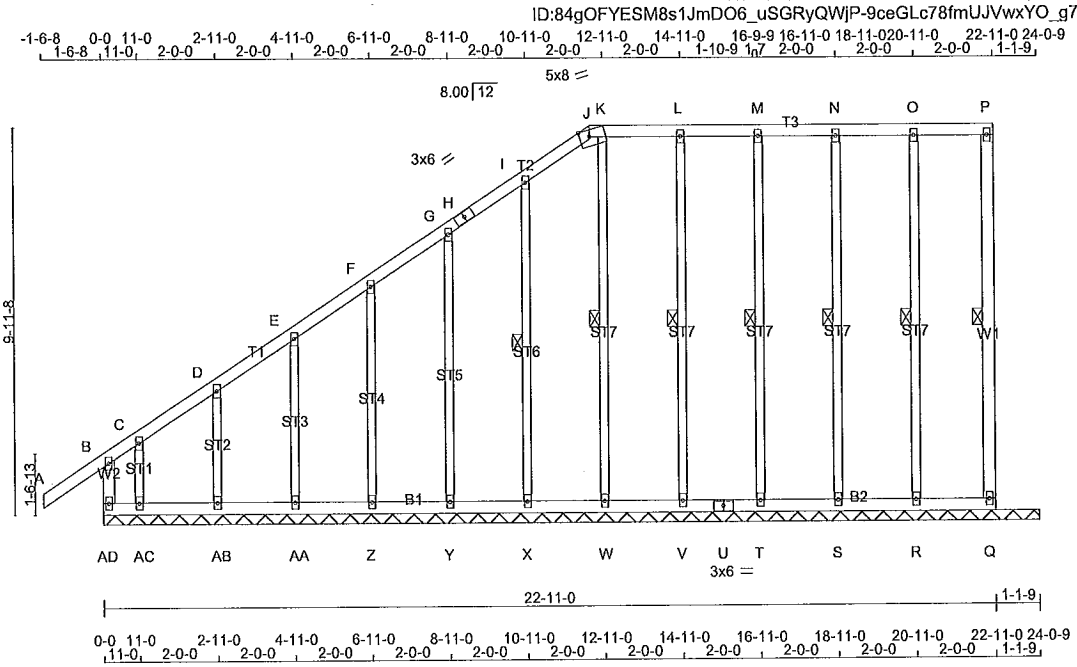

TOTAL WEIGHT = 132 lb (M)

LUMBER

N. L. G. A. RULES

CHORDS	SIZE		LUMBER	DESCR.
AD- B	2x4	DRY	No.2	SPF
A - H	2x4	DRY	No.2	SPF
H - J	2x4	DRY	No.2	SPF
J - P	2x4	DRY	No.2	SPF
AD- U	2x4	DRY	No.2	SPF
U - Q	2x4	DRY	No.2	SPF
ALL WEBS	2x3	DRY	No.2	SPF
EXCEPT				
Q - P	2x4	DRY	No.2	SPF
ALL GABLE WEBS	2x3	DRY	No.2	SPF

DRY: SEASONED LUMBER.

GABLE STUDS SPACED AT 2-0-0 OC.

PLATES (table is in Inches)

JT	TYPE	PLATES	W	LEN	Y	X
B	TMV+p	MT20	2.0	4.0		
C, D, E, F, G, I, L, M, N, O, P						
C	TMW+w	MT20	2.0	4.0		
H	TS-t	MT20	3.0	6.0		
J						
J	TTW-m	MT20	5.0	8.0	Edge 3.00	
K						
Q, R, S, T, V, W, X, Y, Z, AA, AB, AC						
Q	BMW1+w	MT20	2.0	4.0		
U	BS-t	MT20	3.0	6.0		
AD	BMV1+p	MT20	2.0	4.0		

Edge - INDICATES REFERENCE CORNER OF PLATE TOUCHES EDGE OF CHORD.

NOTE: Lateral brace(s) shown shall be 1x4 for Part 9 design as per OBC 9.23.13.11, and no less than 2x4 for Part 4 design

REGISTERED PROFESSIONAL ENGINEER
02/15/2018
EDWIN C. FOK
PROVINCE OF ONTARIO

DIMENSIONS, SUPPORTS AND LOADINGS SPECIFIED BY FABRICATOR TO BE VERIFIED BY BUILDING DESIGNER

BEARINGS

THIS TRUSS DESIGNED FOR CONTINUOUS BEARINGS.

THIS TRUSS REQUIRES RIGID SHEATHING ON EXPOSED FACE.

PROVIDE ANCHORAGE AT BEARING JOINT AC FOR 320 LBS FACTORED UPLIFT
BEARING MATERIAL TO BE SPF NO.2 OR BETTER AT JOINT(S)

BRACING

TOP CHORD TO BE SHEATHED OR MAX. PURLIN SPACING = 6.25 FT.
MAX. UNBRACED BOTTOM CHORD LENGTH = 10.00 FT OR RIGID CEILING DIRECTLY APPLIED.

ALL PITCH BREAKS AND PERIMETER CORNER JOINTS MUST BE LATERALLY RESTRAINED.

1 LATERAL BRACE(S) AT 1/ 2 LENGTH OF O-R, N-S, M-T, L-V, K-W, I-X, P-Q.

END VERTICAL(S) MUST BE SHEATHED OR HAVE BRACES AS INDICATED IN THE MAX. UNBRACED LENGTH COLUMN OF THE TABLE BELOW

LOADING

TOTAL LOAD CASES: (4)

CHORDS

MEMB. FR-TO	MAX. FORCE (LBS)	FACTORED VERT. LOAD LC1 (PLF) FROM	TO	MAX CSI (LC)	MAX. UNBRAC LENGTH
AD- B	-498 / 0	0.0	0.0	0.05 (1)	7.81
A- B	0 / 35	-78.0	-78.0	0.15 (1)	10.00
B- C	-188 / 0	-78.0	-78.0	0.25 (1)	6.25
C- D	0 / 55	-78.0	-78.0	0.25 (1)	10.00
D- E	-28 / 0	-78.0	-78.0	0.12 (1)	6.25
E- F	-3 / 0	-78.0	-78.0	0.04 (1)	10.00
F- G	-4 / 0	-78.0	-78.0	0.04 (1)	10.00
G- H	-5 / 0	-78.0	-78.0	0.04 (1)	10.00
H- I	-5 / 0	-78.0	-78.0	0.04 (1)	10.00
I- J	-6 / 0	-78.0	-78.0	0.03 (1)	10.00
J- K	0 / 3	-78.0	-78.0	0.03 (1)	10.00
K- L	0 / 0	-78.0	-78.0	0.04 (1)	10.00
L- M	0 / 0	-78.0	-78.0	0.04 (1)	10.00
M- N	0 / 0	-78.0	-78.0	0.04 (1)	10.00
N- O	0 / 0	-78.0	-78.0	0.04 (1)	10.00
O- P	0 / 0	-78.0	-78.0	0.03 (1)	10.00
AD-AC	0 / 0	-18.5	-18.5	0.01 (4)	10.00
AC-AB	0 / 16	-18.5	-18.5	0.02 (4)	10.00
AB-AA	0 / 8	-18.5	-18.5	0.02 (4)	10.00
AA- Z	0 / 5	-18.5	-18.5	0.01 (4)	10.00
Z- Y	0 / 3	-18.5	-18.5	0.01 (4)	10.00
Y- X	0 / 1	-18.5	-18.5	0.01 (4)	10.00
X- W	0 / 0	-18.5	-18.5	0.01 (4)	10.00
W- V	0 / 0	-18.5	-18.5	0.01 (4)	10.00
V- U	0 / 0	-18.5	-18.5	0.01 (4)	10.00
U- T	0 / 0	-18.5	-18.5	0.01 (4)	10.00
T- S	0 / 0	-18.5	-18.5	0.01 (4)	10.00
S- R	0 / 0	-18.5	-18.5	0.02 (4)	10.00
R- Q	0 / 0	-18.5	-18.5	0.02 (4)	10.00

WEBS

MEMB. FR-TO	MAX. FORCE (LBS)	MAX CSI (LC)
R- O	-162 / 0	0.11 (1)
S- N	-157 / 0	0.11 (1)
T- M	-155 / 0	0.10 (1)
V- L	-158 / 0	0.11 (1)
W- K	-160 / 0	0.11 (1)
X- I	-150 / 0	0.08 (1)
Y- G	-160 / 0	0.16 (1)
Z- F	-161 / 0	0.10 (1)
AA- E	-115 / 0	0.04 (1)
AB- D	-317 / 0	0.07 (1)
AC- C	0 / 351	0.08 (1)
Q- P	-59 / 0	0.03 (1)

DESIGN CRITERIA

SPECIFIED LOADS:

TOP CH.	LL	=	21.0	PSF
	DL	=	6.0	PSF
BOT CH.	LL	=	0.0	PSF
	DL	=	7.4	PSF
TOTAL LOAD		=	34.4	PSF

SPACING = 24.0 IN. C/C

LOADING IN FLAT SECTION BASED ON A SLOPE OF 2.00/12 MINIMUM

THIS TRUSS IS DESIGNED FOR RESIDENTIAL OR SMALL BUILDING REQUIREMENTS OF PART 9, NBCC 2010, NBCC 2015

THIS DESIGN COMPLIES WITH:
- PART 9 OF OBC 2012, OBC 2018
- CSA 086-09, CSA 086-14
- TPIC 2011, TPIC 2014

DESIGN ASSUMPTIONS
-OVERHANG NOT TO BE ALTERED OR CUT OFF.

(55 % OF 23.0 P.S.F. G.S.L. PLUS 8.4 P.S.F. RAIN LOAD) EQUALS 21.0 P.S.F. SPECIFIED ROOF LIVE LOAD

CSI: TC=0.25/1.00 (C-D:1) , BC=0.02/1.00 (Q-R:4) , WB=0.16/1.00 (G-Y:1) , SSI=0.24/1.00 (B-C:1)

DOL LUMBER=1.00 NAIL=1.00 LS BEND=1.10 COMP=1.10 SHEAR=1.10 TENS= 1.10

COMPANION LIVE LOAD FACTOR = 1.00

TRUSS PLATE MANUFACTURER IS NOT RESPONSIBLE FOR QUALITY CONTROL IN THE TRUSS MANUFACTURING PLANT .

NAIL VALUES

PLATE	GRIP(DRY) (PSI) MAX	MIN	SHEAR (PLI) MAX	MIN	SECTION (PLI) MAX	MIN
MT20	618	354	1667	788	1987	1656

PLATE PLACEMENT TOL. = 0.250 Inches

PLATE ROTATION TOL. = 5.0 Deg.

JSI GRIP= 0.40 (E) (INPUT = 0.90)
JSI METAL= 0.25 (B) (INPUT = 1.00)

A-18023056

JOB NAME	TRUSS NAME	QUANTITY	PLY	JOB DESC.	DRWG NO.
292566	H11P	1	1	TRUSS DESC.	

Alpa Roof Truss, Maple

Version 8.200 S Jan 6 2018 MiTek Industries, Inc. Thu Feb 15 08:14:10 2018 Page 1

ID:84gOFYESM8s1JmDO6_uSGRyQWjP-WZS9OKBHUJ6bchqVBXFIg70r47RwHKUs1k8T4Czkz7R

Scale = 1:19.9

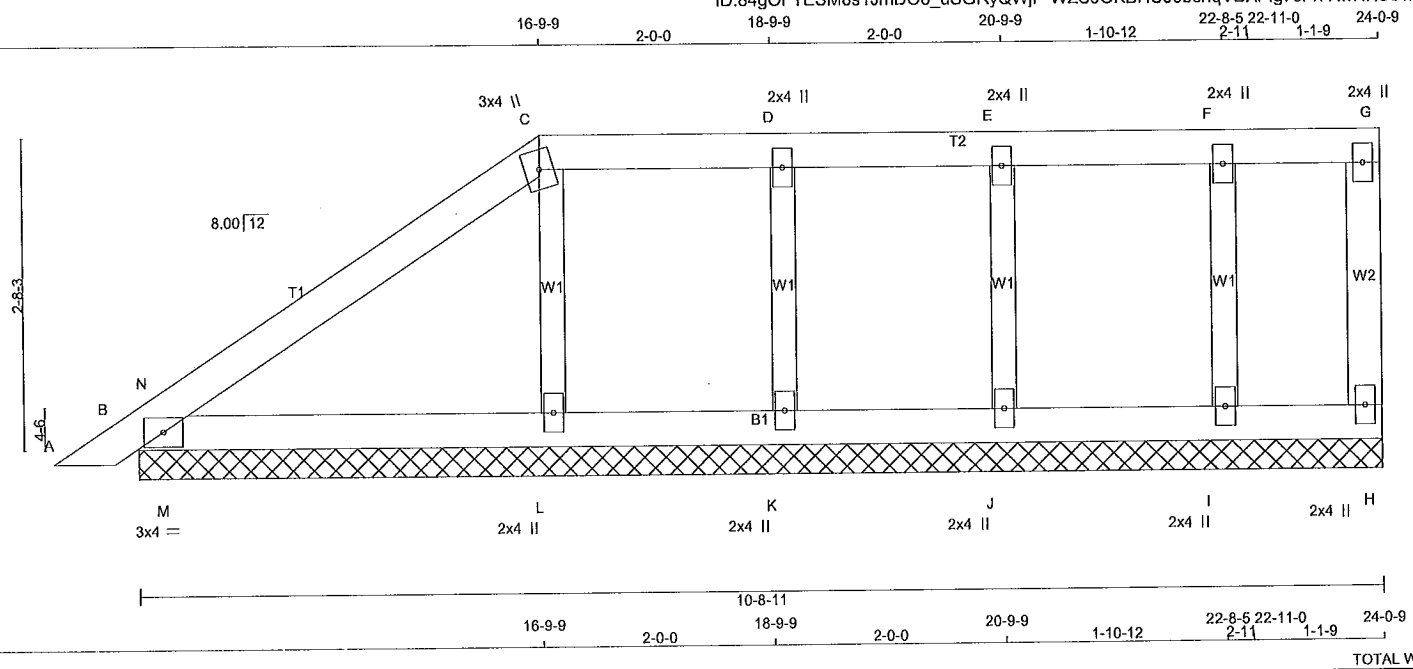

TOTAL WEIGHT = 35 lb

LUMBER

N. L. G. A. RULES

CHORDS	SIZE		LUMBER	DESCR.
A - C	2x4	DRY	No.2	SPF
C - G	2x4	DRY	No.2	SPF
H - G	2x4	DRY	No.2	SPF
B - H	2x4	DRY	No.2	SPF
ALL WEBS	2x3	DRY	No.2	SPF

DRY: SEASONED LUMBER.

GABLE STUDS SPACED AT 2-0-0 OC.

PLATES (table is in inches)

JT	TYPE	PLATES	W	LEN	Y	X
B	TMB1-I	MT20	3.0	4.0		
C	TTW+m	MT20	3.0	4.0		
D, E, F						
D	TMW+w	MT20	2.0	4.0		
G	TMV+p	MT20	2.0	4.0		
H	BMV1+p	MT20	2.0	4.0		
I, J, K, L						
I	BMW1+w	MT20	2.0	4.0		

NOTE: Lateral brace(s) shown shall be 1x4 for Part 9 design as per OBC 9.23.13.11, and no less than 2x4 for Part 4 design

REGISTERED PROFESSIONAL ENGINEER
02/15/2018
EDWIN C. FOK
PROVINCE OF ONTARIO

DIMENSIONS, SUPPORTS AND LOADINGS SPECIFIED BY FABRICATOR TO BE VERIFIED BY BUILDING DESIGNER

BEARINGS

THIS TRUSS DESIGNED FOR CONTINUOUS BEARINGS.

THIS TRUSS REQUIRES RIGID SHEATHING ON EXPOSED FACE.

BEARING MATERIAL TO BE SPF NO.2 OR BETTER AT JOINT(S)

BRACING

TOP CHORD TO BE SHEATHED OR MAX. PURLIN SPACING = 6.25 FT.
MAX. UNBRACED BOTTOM CHORD LENGTH = 10.00 FT OR RIGID CEILING DIRECTLY APPLIED.

ALL PITCH BREAKS AND PERIMETER CORNER JOINTS MUST BE LATERALLY RESTRAINED.

LOADING

TOTAL LOAD CASES: (4)

CHORDS

MEMB. FR-TO	MAX. FACTORED FORCE (LBS)	FACTORED VERT. LOAD LC1 (PLF) FROM	TO	MAX CSI (LC)	MAX. UNBRAC LENGTH
A- B	0 / 13	-78.0	-78.0	0.02 (1)	10.00
B- N	-9 / 43	-78.0	-78.0	0.04 (1)	10.00
N- C	-14 / 0	-78.0	-78.0	0.12 (1)	6.25
C- D	0 / 0	-78.0	-78.0	0.05 (1)	10.00
D- E	0 / 0	-78.0	-78.0	0.05 (1)	10.00
E- F	0 / 0	-78.0	-78.0	0.03 (1)	10.00
F- G	0 / 0	-78.0	-78.0	0.03 (1)	10.00
H- G	-38 / 0	0.0	0.0	0.01 (1)	7.81
B- M	0 / 8	-18.5	-18.5	0.10 (1)	10.00
M- L	0 / 8	-18.5	-18.5	0.10 (1)	10.00
L- K	0 / 0	-18.5	-18.5	0.06 (1)	10.00
K- J	0 / 0	-18.5	-18.5	0.02 (4)	10.00
J- I	0 / 0	-18.5	-18.5	0.02 (4)	10.00
I- H	0 / 0	-18.5	-18.5	0.01 (4)	10.00

WEBS

MEMB. FR-TO	MAX. FACTORED FORCE (LBS)	MAX CSI (LC)
L- C	-176 / 0	0.03 (1)
K- D	-178 / 0	0.03 (1)
J- E	-143 / 0	0.02 (1)
I- F	-140 / 0	0.02 (1)
M- N	-228 / 0	0.00 (1)

DESIGN CRITERIA

SPECIFIED LOADS:

TOP CH.	LL	=	21.0	PSF
	DL	=	6.0	PSF
BOT CH.	LL	=	0.0	PSF
	DL	=	7.4	PSF
TOTAL LOAD		=	34.4	PSF

SPACING = 24.0 IN. C/C

LOADING IN FLAT SECTION BASED ON A SLOPE OF 2.00/12 MINIMUM

THIS TRUSS IS DESIGNED FOR RESIDENTIAL OR SMALL BUILDING REQUIREMENTS OF PART 9, NBCC 2010, NBCC 2015

THIS DESIGN COMPLIES WITH:
- PART 9 OF OBC 2012, OBC 2018
- CSA 086-09, CSA 086-14
- TPIC 2011, TPIC 2014

(55 % OF 23.0 P.S.F. G.S.L. PLUS 8.4 P.S.F. RAIN LOAD) EQUALS 21.0 P.S.F. SPECIFIED ROOF LIVE LOAD

CSI: TC=0.12/1.00 (C-N:1) , BC=0.10/1.00 (B-M:1) , WB=0.03/1.00 (D-K:1) , SSI=0.18/1.00 (B-M:1)

DOL LUMBER=1.00 NAIL=1.00 LS BEND=1.10 COMP=1.10 SHEAR=1.10 TENS= 1.10

COMPANION LIVE LOAD FACTOR = 1.00

AUTOSOLVE RIGHT HEEL ONLY

TRUSS PLATE MANUFACTURER IS NOT RESPONSIBLE FOR QUALITY CONTROL IN THE TRUSS MANUFACTURING PLANT .

NAIL VALUES

PLATE	GRIP(DRY) (PSI) MAX	MIN	SHEAR (PLI) MAX	MIN	SECTION (PLI) MAX	MIN
MT20	618	354	1667	788	1987	1656

PLATE PLACEMENT TOL. = 0.250 Inches

PLATE ROTATION TOL. = 5.0 Deg.

JSI GRIP= 0.17 (B) (INPUT = 0.90)
JSI METAL= 0.06 (C) (INPUT = 1.00)

A-18023057

JOB NAME	TRUSS NAME	QUANTITY	PLY	JOB DESC.	DRWG NO.
292566	H12P	1	1	TRUSS DESC.	

Alpa Roof Truss, Maple

Version 8.200 S Jan 6 2018 MiTek Industries, Inc. Thu Feb 15 08:14:19 2018 Page 1
ID:84gOFYESM8s1JmDO6_uSGRyQWjP-IIVZHPIwM4EKB40EDwwPX1uLblTPuNKA5dqRuAzkz7I

Scale = 1:33.2

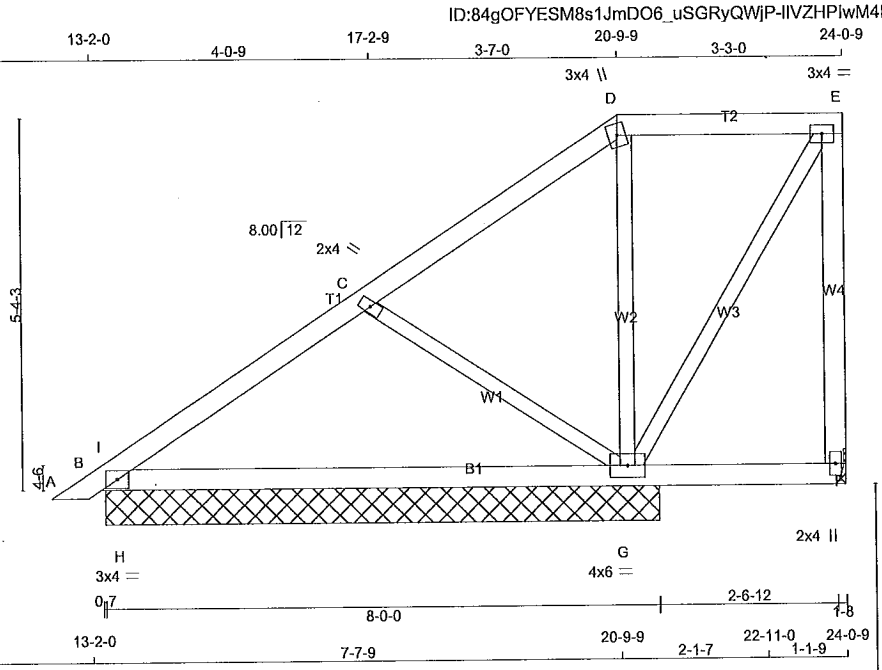

TOTAL WEIGHT = 44 lb

[M]

LUMBER
N. L. G. A. RULES

CHORDS	SIZE		LUMBER	DESCR.
A - D	2x4	DRY	No.2	SPF
D - E	2x4	DRY	No.2	SPF
F - E	2x4	DRY	No.2	SPF
B - F	2x4	DRY	No.2	SPF
ALL WEBS	2x3	DRY	No.2	SPF

DRY: SEASONED LUMBER.

PLATES (table is in inches)

JT	TYPE	PLATES	W	LEN	Y	X
B	TMB1-I	MT20	3.0	4.0		
C	TMW+w	MT20	2.0	4.0		
D	TTW+m	MT20	3.0	4.0		
E	TMVW-t	MT20	3.0	4.0		
F	BMV1+p	MT20	2.0	4.0		
G	BMWWW1-t	MT20	4.0	6.0		

NOTE: Lateral brace(s) shown shall be 1x4 for Part 9 design as per OBC 9.23.13.11, and no less than 2x4 for Part 4 design

REGISTERED PROFESSIONAL ENGINEER
02/15/2018
EDWIN C. FOK
PROVINCE OF ONTARIO

DIMENSIONS, SUPPORTS AND LOADINGS SPECIFIED BY FABRICATOR TO BE VERIFIED BY BUILDING DESIGNER

BEARINGS

JT	FACTORED GROSS REACTION VERT	HORZ	MAXIMUM FACTORED GROSS REACTION DOWN	HORZ	UPLIFT	INPUT BRG IN-SX	REQRD BRG IN-SX
F	56	0	56	0	0	HANGER BY OTHERS MIN. SEAT SIZE: 1-8	
B	377	0	377	0	0	8-0-0	9-7
G	653	0	653	0	0	8-0-0	9-7

UNFACTORED REACTIONS

JT	1ST LCASE COMBINED	MAX./MIN. COMPONENT REACTIONS SNOW	LIVE	PERM.LIVE	WIND	DEAD	SOIL
F	40	26 / 0	0 / 0	0 / 0	0 / 0	14 / 0	0 / 0
B	268	170 / 0	0 / 0	0 / 0	0 / 0	98 / 0	0 / 0
G	466	282 / 0	0 / 0	0 / 0	0 / 0	184 / 0	0 / 0

BEARING MATERIAL TO BE SPF NO.2 OR BETTER AT JOINT(S) B, G

BRACING
TOP CHORD TO BE SHEATHED OR MAX. PURLIN SPACING = 6.25 FT.
MAX. UNBRACED BOTTOM CHORD LENGTH = 10.00 FT OR RIGID CEILING DIRECTLY APPLIED.

ALL PITCH BREAKS AND PERIMETER CORNER JOINTS MUST BE LATERALLY RESTRAINED.

LOADING
TOTAL LOAD CASES: (4)

CHORDS

MEMB. FR-TO	MAX. FACTORED FORCE (LBS)	FACTORED VERT. LOAD LC1 (PLF) FROM	TO	MAX CSI (LC)	MAX. UNBRAC LENGTH
A- B	0 / 13	-78.0	-78.0	0.02 (1)	10.00
B- I	-406 / 0	-78.0	-78.0	0.14 (4)	6.25
I- C	-253 / 0	-78.0	-78.0	0.19 (1)	6.25
C- D	0 / 26	-78.0	-78.0	0.19 (1)	10.00
D- E	0 / 45	-78.0	-78.0	0.15 (1)	10.00
F- E	-55 / 0	0.0	0.0	0.03 (1)	7.81
B- H	0 / 235	-18.5	-18.5	0.12 (4)	10.00
H- G	0 / 235	-18.5	-18.5	0.20 (4)	10.00
G- F	0 / 0	-18.5	-18.5	0.18 (4)	10.00

WEBS

MEMB. FR-TO	MAX. FACTORED FORCE (LBS)	MAX CSI (LC)
G- D	-258 / 0	0.11 (1)
G- E	-84 / 0	0.05 (1)
C- G	-333 / 0	0.12 (1)
H- I	0 / 223	0.00 (1)

DESIGN CRITERIA

SPECIFIED LOADS:

TOP CH.	LL	=	21.0	PSF
	DL	=	6.0	PSF
BOT CH.	LL	=	0.0	PSF
	DL	=	7.4	PSF
TOTAL LOAD		=	34.4	PSF

SPACING = 24.0 IN. C/C

LOADING IN FLAT SECTION BASED ON A SLOPE OF 2.00/12 MINIMUM

THIS TRUSS IS DESIGNED FOR RESIDENTIAL OR SMALL BUILDING REQUIREMENTS OF PART 9, NBCC 2010, NBCC 2015

THIS DESIGN COMPLIES WITH:
- PART 9 OF OBC 2012, OBC 2018
- CSA 086-09, CSA 086-14
- TPIC 2011, TPIC 2014

(55 % OF 23.0 P.S.F. G.S.L. PLUS 8.4 P.S.F. RAIN LOAD) EQUALS 21.0 P.S.F. SPECIFIED ROOF LIVE LOAD

ALLOWABLE DEFL.(LL)= L/360 (0.25")
CALCULATED VERT. DEFL.(LL) = L/ 999 (0.01")
ALLOWABLE DEFL.(TL)= L/360 (0.25")
CALCULATED VERT. DEFL.(TL) = L/ 999 (0.07")

CSI: TC=0.19/1.00 (C-D:1) , BC=0.20/1.00 (G-H:4) , WB=0.12/1.00 (C-G:1) , SSI=0.20/1.00 (B-I:4)

DOL LUMBER=1.00 NAIL=1.00 LS BEND=1.10 COMP=1.10 SHEAR=1.10 TENS= 1.10

COMPANION LIVE LOAD FACTOR = 1.00

AUTOSOLVE RIGHT HEEL ONLY

TRUSS PLATE MANUFACTURER IS NOT RESPONSIBLE FOR QUALITY CONTROL IN THE TRUSS MANUFACTURING PLANT .

NAIL VALUES

PLATE	GRIP(DRY) (PSI) MAX	MIN	SHEAR (PLI) MAX	MIN	SECTION (PLI) MAX	MIN
MT20	618	354	1667	788	1987	1656

PLATE PLACEMENT TOL. = 0.250 Inches

PLATE ROTATION TOL. = 5.0 Deg.

JSI GRIP= 0.32 (G) (INPUT = 0.90)
JSI METAL= 0.12 (C) (INPUT = 1.00)

A-18023058

JOB NAME	TRUSS NAME	QUANTITY	PLY	JOB DESC.	DRWG NO.
292566	H13P	5	1	TRUSS DESC.	

Alpa Roof Truss, Maple

Version 8.200 S Jan 6 2018 MiTek Industries, Inc. Thu Feb 15 08:14:25 2018 Page 1
ID:84gOFYESM8s1JmDO6_uSGRyQWjP-aSsqYSNhyw?Tv?TOZB1pnl8M2AVVI413UZHm6qzkz7C

Scale = 1:34.4

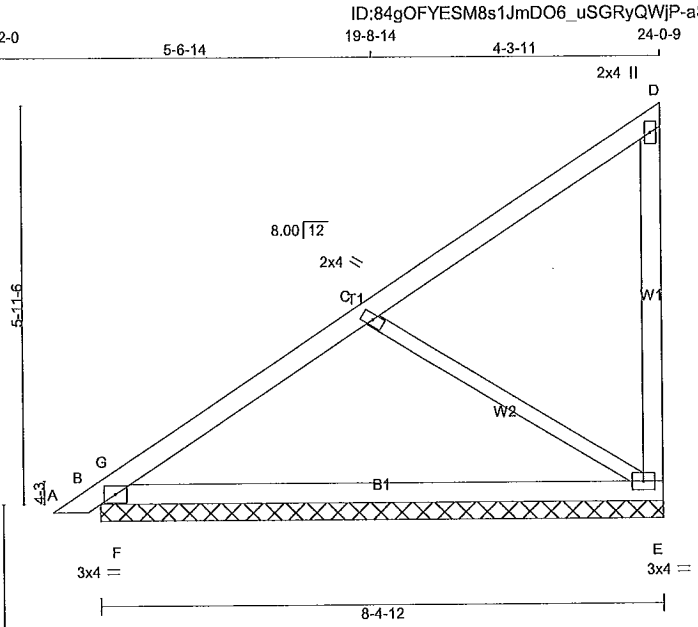

TOTAL WEIGHT = 5 X 32 = 160 lb [M]

LUMBER
N. L. G. A. RULES

CHORDS	SIZE		LUMBER	DESCR.
A - D	2x4	DRY	No.2	SPF
E - D	2x4	DRY	No.2	SPF
B - E	2x4	DRY	No.2	SPF
ALL WEBS	2x3	DRY	No.2	SPF

DRY: SEASONED LUMBER.

PLATES (table is in inches)

JT	TYPE	PLATES	W	LEN Y	X
B	TMB1-l	MT20	3.0	4.0	
C	TMW+w	MT20	2.0	4.0	
D	TMV+p	MT20	2.0	4.0	
E	BMVW1-t	MT20	3.0	4.0	

DIMENSIONS, SUPPORTS AND LOADINGS SPECIFIED BY FABRICATOR TO BE VERIFIED BY BUILDING DESIGNER

BEARINGS

JT	FACTORED GROSS REACTION VERT	HORZ	MAXIMUM FACTORED GROSS REACTION DOWN	HORZ	UPLIFT	INPUT BRG IN-SX	REQRD BRG IN-SX
E	405	0	405	0	0	8-4-12	6-8
B	454	0	454	0	0	8-4-12	6-8

UNFACTORED REACTIONS

JT	1ST LCASE COMBINED	MAX /MIN. COMPONENT REACTIONS SNOW	LIVE	PERM.LIVE	WIND	DEAD	SOIL
E	289	176 / 0	0 / 0	0 / 0	0 / 0	113 / 0	0 / 0
B	323	203 / 0	0 / 0	0 / 0	0 / 0	120 / 0	0 / 0

BEARING MATERIAL TO BE SPF NO.2 OR BETTER AT JOINT(S) E, B

BRACING
TOP CHORD TO BE SHEATHED OR MAX. PURLIN SPACING = 6.25 FT.
MAX. UNBRACED BOTTOM CHORD LENGTH = 10.00 FT OR RIGID CEILING DIRECTLY APPLIED.

ALL PITCH BREAKS AND PERIMETER CORNER JOINTS MUST BE LATERALLY RESTRAINED.

LOADING
TOTAL LOAD CASES: (4)

CHORDS

MEMB. FR-TO	MAX. FACTORED FORCE (LBS)	FACTORED VERT. LOAD LC1 (PLF) FROM	TO	MAX CSI (LC)	MAX. UNBRAC LENGTH
A- B	0 / 13	-78.0	-78.0	0.02 (1)	10.00
B- G	-620 / 0	-78.0	-78.0	0.25 (4)	6.25
G- C	-365 / 0	-78.0	-78.0	0.26 (1)	6.25
C- D	-24 / 0	-78.0	-78.0	0.25 (1)	6.25
E- D	-128 / 0	0.0	0.0	0.08 (1)	7.81
B- F	0 / 340	-18.5	-18.5	0.23 (4)	10.00
F- E	0 / 340	-18.5	-18.5	0.29 (4)	10.00

WEBS

MEMB. FR-TO	MAX. FACTORED FORCE (LBS)	MAX CSI (LC)
C- E	-400 / 0	0.17 (1)
F- G	0 / 391	0.00 (1)

DESIGN CRITERIA

SPECIFIED LOADS:

TOP CH.	LL	=	21.0	PSF
	DL	=	6.0	PSF
BOT CH.	LL	=	0.0	PSF
	DL	=	7.4	PSF
TOTAL LOAD		=	34.4	PSF

SPACING = 24.0 IN. C/C

THIS TRUSS IS DESIGNED FOR RESIDENTIAL OR SMALL BUILDING REQUIREMENTS OF PART 9, NBCC 2010, NBCC 2015

THIS DESIGN COMPLIES WITH:
- PART 9 OF OBC 2012, OBC 2018
- CSA 086-09, CSA 086-14
- TPIC 2011, TPIC 2014

(55 % OF 23.0 P.S.F. G.S.L. PLUS 8.4 P.S.F. RAIN LOAD) EQUALS 21.0 P.S.F. SPECIFIED ROOF LIVE LOAD

CSI: TC=0.26/1.00 (C-G:1) , BC=0.29/1.00 (E-F:4) , WB=0.17/1.00 (C-E:1) , SSI=0.36/1.00 (B-F:4)

DOL LUMBER=1.00 NAIL=1.00 LS BEND=1.10 COMP=1.10 SHEAR=1.10 TENS= 1.10

COMPANION LIVE LOAD FACTOR = 1.00

AUTOSOLVE HEELS OFF

TRUSS PLATE MANUFACTURER IS NOT RESPONSIBLE FOR QUALITY CONTROL IN THE TRUSS MANUFACTURING PLANT .

NAIL VALUES

PLATE	GRIP(DRY) (PSI) MAX	MIN	SHEAR (PLI) MAX	MIN	SECTION (PLI) MAX	MIN
MT20	618	354	1667	788	1987	1656

PLATE PLACEMENT TOL. = 0.250 Inches

PLATE ROTATION TOL. = 5.0 Deg.

JSI GRIP= 0.53 (E) (INPUT = 0.90)
JSI METAL= 0.15 (C) (INPUT = 1.00)

NOTE: Lateral brace(s) shown shall be 1x4 for Part 9 design as per OBC 9.23.13.11, and no less than 2x4 for Part 4 design

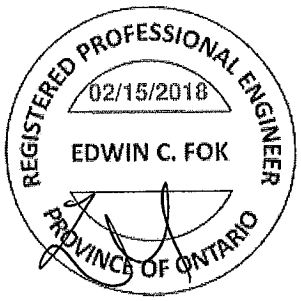

A-18023059

JOB NAME	TRUSS NAME	QUANTITY	PLY	JOB DESC.	DRWG NO.
292566	H14T	1	2	TRUSS DESC.	

Alpa Roof Truss, Maple

Version 8.200 S Jan 6 2018 MiTek Industries, Inc. Thu Feb 15 08:21:04 2018 Page 1

ID:84gOFYESM8s1JmDO6_uSGRyQWjP-ODTgHuCz_WGsGJT4RUhNSRAbT0cOHTKoE8RNbCzkz0z

Scale = 1:46.9

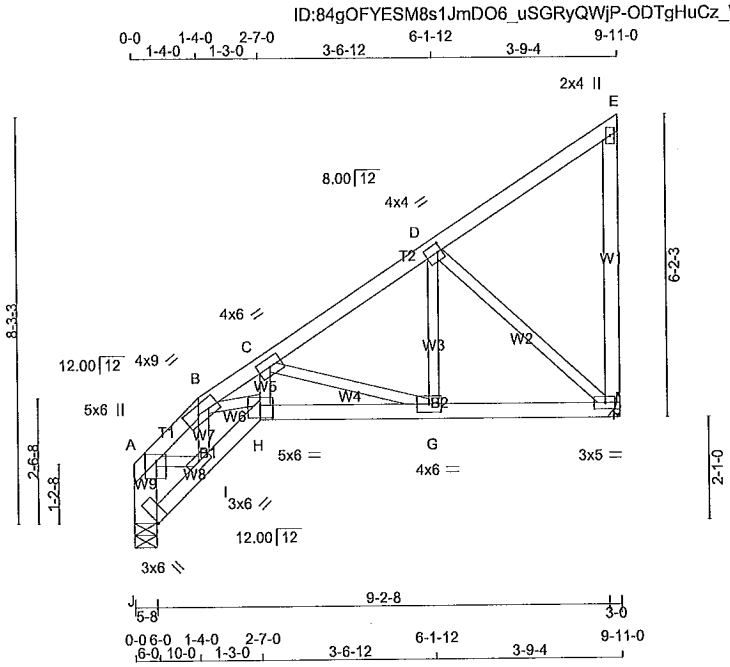

TOTAL WEIGHT = 2 X 47 = 94 lb

[M]

LUMBER

N. L. G. A. RULES

CHORDS	SIZE		LUMBER	DESCR.
J - A	2x6	DRY	No.2	SPF
A - B	2x4	DRY	No.2	SPF
B - E	2x4	DRY	No.2	SPF
F - E	2x4	DRY	No.2	SPF
J - H	2x4	DRY	No.2	SPF
H - F	2x4	DRY	No.2	SPF
ALL WEBS	2x3	DRY	No.2	SPF

DRY: SEASONED LUMBER.

DESIGN CONSISTS OF 2 TRUSSES BUILT SEPARATELY THEN FASTENED TOGETHER AS FOLLOWS:

CHORDS	#ROWS	SURFACE SPACING (IN)	LOAD(PLF)
TOP CHORDS : (0.122"X3") SPIRAL NAILS			
J- A	2	12	TOP
A- B	1	12	TOP
B- E	1	12	TOP
E- F	1	12	TOP
BOTTOM CHORDS : (0.122"X3") SPIRAL NAILS			
J- H	1	12	SIDE(95.4)
H- F	1	8	SIDE(133.1)
WEBS : (0.122"X3") SPIRAL NAILS			
2x3	1	6	

NAILS TO BE DRIVEN FROM ONE SIDE ONLY.

TOP - COMPONENTS ARE LOADED FROM THE TOP AND MUST BE PLACED ON TOP EDGE OF ALL PLIES FOR THE LOAD TO BE TRANSFERRED TO EACH PLY.

SIDE - PLF SHOWN IS THE EQUIVALENT UDL APPLIED TO ONE SIDE THAT THE CORRESPONDING NAILING PATTERN SHALL BE CAPABLE OF TRANSFERING. REMAINING PLF MUST BE APPLIED ON THE OPPOSITE SIDE OR ON THE TOP.

PLATES (table is in inches)

JT	TYPE	PLATES	W	LEN	Y	X
A	TMVW+p	MT20	5.0	6.0	1.75	2.75
B	TTWW-m	MT20	4.0	9.0	2.00	3.50

NOTE: Lateral brace(s) shown shall be 1x4 for Part 9 design as per OBC 9.23.13.11, and no less than 2x4 for Part 4 design

REGISTERED PROFESSIONAL ENGINEER
02/15/2018
EDWIN C. FOK
PROVINCE OF ONTARIO

DIMENSIONS, SUPPORTS AND LOADINGS SPECIFIED BY FABRICATOR TO BE VERIFIED BY BUILDING DESIGNER

BEARINGS

JT	FACTORED GROSS REACTION VERT	HORZ	MAXIMUM FACTORED GROSS REACTION DOWN	HORZ	UPLIFT	INPUT BRG IN-SX	REQRD BRG IN-SX
J	1799	0	1799	0	0	5-8	1-8
F	1799	0	1799	0	0	HANGER BY OTHERS	
						MIN. SEAT SIZE: 1-8	

UNFACTORED REACTIONS

JT	1ST LCASE COMBINED	MAX./MIN. COMPONENT REACTIONS SNOW	LIVE	PERM.LIVE	WIND	DEAD	SOIL
J	1282	783 / 0	0 / 0	0 / 0	0 / 0	500 / 0	0 / 0
F	1282	783 / 0	0 / 0	0 / 0	0 / 0	500 / 0	0 / 0

BEARING MATERIAL TO BE SPF NO.2 OR BETTER AT JOINT(S) J
BEARING SIZE FACTOR = 1.15 AT JNT(S) J (BASED ON SUPPORT DEPTH = 1-8)

BRACING

TOP CHORD TO BE SHEATHED OR MAX. PURLIN SPACING = 4.49 FT.
MAX. UNBRACED BOTTOM CHORD LENGTH = 10.00 FT OR RIGID CEILING DIRECTLY APPLIED.

ALL PITCH BREAKS AND PERIMETER CORNER JOINTS MUST BE LATERALLY RESTRAINED.

LOADING

TOTAL LOAD CASES: (4)

CHORDS

MEMB. FR-TO	MAX. FACTORED FORCE (LBS)	FACTORED VERT. LOAD LC1 (PLF) FROM	TO	MAX CSI (LC)	MAX. UNBRAC LENGTH
J- A	-1611 / 0	0.0	0.0	0.06 (1)	7.81
A- B	-2429 / 0	-78.0	-78.0	0.03 (1)	5.77
B- C	-4346 / 0	-78.0	-78.0	0.12 (1)	4.49
C- D	-1685 / 0	-78.0	-78.0	0.12 (1)	6.25
D- E	-20 / 0	-78.0	-78.0	0.10 (1)	6.25
F- E	-110 / 0	0.0	0.0	0.04 (1)	7.81
J- I	0 / 12	-284.8	-284.8	0.05 (1)	10.00
I- H	0 / 2247	-284.8	-284.8	0.22 (1)	10.00
H- G	0 / 3361	-284.8	-284.8	0.63 (1)	10.00
G- F	0 / 1432	-284.8	-284.8	0.46 (1)	10.00

WEBS

MEMB. FR-TO	MAX. FACTORED FORCE (LBS)	MAX CSI (LC)
H- C	0 / 1997	0.25 (1)
C- G	-2014 / 0	0.25 (1)
G- D	0 / 1842	0.23 (1)
D- F	-1915 / 0	0.39 (1)
I- B	-1007 / 0	0.08 (1)
A- I	0 / 1716	0.21 (1)
B- H	0 / 1951	0.24 (1)

DESIGN CRITERIA

SPECIFIED LOADS:

TOP CH.	LL	=	21.0	PSF
	DL	=	6.0	PSF
BOT CH.	LL	=	0.0	PSF
	DL	=	7.4	PSF
TOTAL LOAD		=	34.4	PSF

SPACING = 24.0 IN. C/C

GIRDER TYPE: CStdGirder
START DISTANCE = 0-0
START SPAN CARRIED = 13-0-8
END DISTANCE = 9-11-0
END SPAN CARRIED = 13-0-8
END WALL WIDTH = 0-0
APPLIED TO FRONT SIDE OF BOTTOM CHORD.
- ADDT'L LOADS BASED ON 55 % OF GSL.

THIS TRUSS IS DESIGNED FOR RESIDENTIAL OR SMALL BUILDING REQUIREMENTS OF PART 9, NBCC 2010, NBCC 2015

THIS DESIGN COMPLIES WITH:
- PART 9 OF OBC 2012, OBC 2018
- CSA 086-09, CSA 086-14
- TPIC 2011, TPIC 2014

(55 % OF 23.0 P.S.F. G.S.L. PLUS 8.4 P.S.F. RAIN LOAD) EQUALS 21.0 P.S.F. SPECIFIED ROOF LIVE LOAD

ALLOWABLE DEFL.(LL)= L/360 (0.33")
CALCULATED VERT. DEFL.(LL) = L/ 999 (0.04")
ALLOWABLE DEFL.(TL)= L/360 (0.33")
CALCULATED VERT. DEFL.(TL) = L/ 999 (0.08")

CSI: TC=0.12/1.00 (B-C:1) , BC=0.63/1.00 (G-H:1) , WB=0.39/1.00 (D-F:1) , SSI=0.28/1.00 (F-G:1)

DOL LUMBER=1.00 NAIL=1.00 LS BEND=1.00 COMP=1.00 SHEAR=1.00 TENS= 1.00

COMPANION LIVE LOAD FACTOR = 1.00

TRUSS PLATE MANUFACTURER IS NOT RESPONSIBLE FOR QUALITY CONTROL IN THE TRUSS MANUFACTURING PLANT .

NAIL VALUES

PLATE	GRIP(DRY) (PSI) MAX	MIN	SHEAR (PLI) MAX	MIN	SECTION (PLI) MAX	MIN
MT20	618	354	1667	788	1987	1656

PLATE PLACEMENT TOL. = 0.250 inches

PLATE ROTATION TOL. = 5.0 Deg.

JSI GRIP= 0.89 (H) (INPUT = 0.90)
JSI METAL= 0.51 (B) (INPUT = 1.00)

A-18023060

CONTINUED ON PAGE 2

JOB NAME	TRUSS NAME	QUANTITY	PLY	JOB DESC.	DRWG NO.
292566	H14T	1	2	TRUSS DESC.	

Alpa Roof Truss, Maple

Version 8.200 S Jan 6 2018 MiTek Industries, Inc. Thu Feb 15 08:21:04 2018 Page 2
ID:84gOFYESM8s1JmDO6_uSGRyQWjP-ODTgHuCz_WGsGJT4RUhNSRAbT0cOHTKoE8RNbCzkz0z

PLATES (table is in inches)

JT	TYPE	PLATES	W	LEN	Y	X
C	TMWW-t	MT20	4.0	6.0		
D	TMWW-t	MT20	4.0	4.0	2.00	1.00
E	TMV+p	MT20	2.0	4.0		
F	BMVW1-t	MT20	3.0	5.0	1.50	2.25
G	BMWW-t	MT20	4.0	6.0		
H	BBWW-l	MT20	5.0	6.0	3.00	3.00
I	BMWW-t	MT20	3.0	6.0		
J	BVM1+l	MT20	3.0	6.0	Edge	0.25

Edge - INDICATES REFERENCE CORNER OF PLATE TOUCHES EDGE OF CHORD.

NOTE: Lateral brace(s) shown shall be 1x4 for Part 9 design as per OBC 9.23.13.11, and no less than 2x4 for Part 4 design

REGISTERED PROFESSIONAL ENGINEER
02/15/2018
EDWIN C. FOK
PROVINCE OF ONTARIO

A-180230060(27)

JOB NAME	TRUSS NAME	QUANTITY	PLY	JOB DESC.	DRWG NO.
292566	H15T	6	1	TRUSS DESC.	

Alpa Roof Truss, Maple

Version 8.200 S Jan 6 2018 MiTek Industries, Inc. Thu Feb 15 08:14:42 2018 Page 1

ID:84gOFYESM8s1JmDO6_uSGRyQWjP-ajNF6GaLx883RcGf3GqoztLHV0JgnlfZOIv9BLzkz6x

Scale = 1:65.9

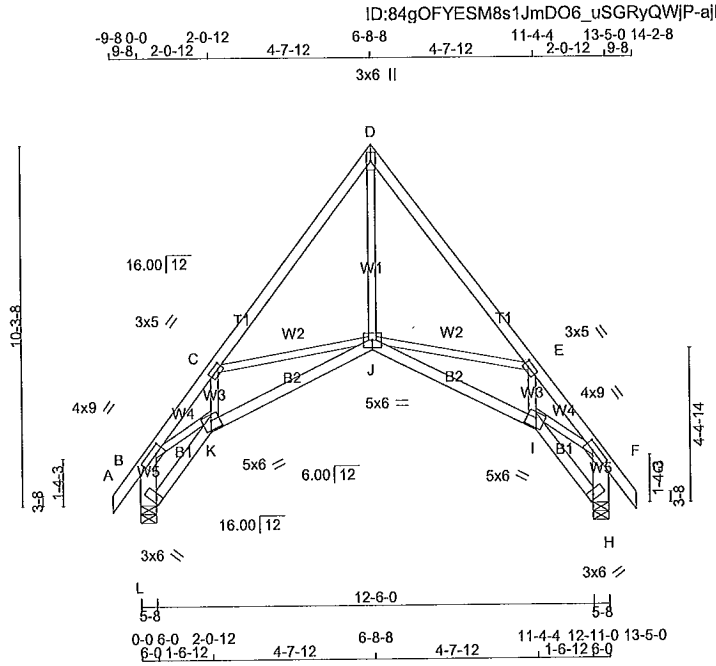

TOTAL WEIGHT = 6 X 71 = 425 lb

[M][F]

LUMBER

N. L. G. A. RULES

CHORDS	SIZE		LUMBER	DESCR.
A - D	2x4	DRY	No.2	SPF
D - G	2x4	DRY	No.2	SPF
L - B	2x6	DRY	No.2	SPF
H - F	2x6	DRY	No.2	SPF
L - K	2x4	DRY	No.2	SPF
K - J	2x4	DRY	No.2	SPF
J - I	2x4	DRY	No.2	SPF
I - H	2x4	DRY	No.2	SPF
ALL WEBS EXCEPT	2x3	DRY	No.2	SPF

DRY: SEASONED LUMBER.

PLATES (table is in Inches)

JT	TYPE	PLATES	W	LEN	Y	X
B	TMVW-t	MT20	4.0	9.0	2.00	3.00
C	TMWW-t	MT20	3.0	5.0	1.50	1.50
D	TTW+p	MT20	3.0	6.0		
E	TMWW-t	MT20	3.0	5.0	1.50	1.50
F	TMVW-t	MT20	4.0	9.0	2.00	3.00
H	BVM1+I	MT20	3.0	6.0	Edge	
I	BBWW-I	MT20	5.0	6.0	3.00	3.00
J	BBWWW-p	MT20	5.0	6.0		
K	BBWW-I	MT20	5.0	6.0	3.00	3.00
L	BVM1+I	MT20	3.0	6.0	Edge	

Edge - INDICATES REFERENCE CORNER OF PLATE TOUCHES EDGE OF CHORD.

NOTE: Lateral brace(s) shown shall be 1x4 for Part 9 design as per OBC 9.23.13.11, and no less than 2x4 for Part 4 design

REGISTERED PROFESSIONAL ENGINEER
02/15/2018
EDWIN C. FOK
PROVINCE OF ONTARIO

DIMENSIONS, SUPPORTS AND LOADINGS SPECIFIED BY FABRICATOR TO BE VERIFIED BY BUILDING DESIGNER

BEARINGS

JT	FACTORED GROSS REACTION VERT	HORZ	MAXIMUM FACTORED GROSS REACTION DOWN	HORZ	UPLIFT	INPUT BRG IN-SX	REQRD BRG IN-SX
L	718	0	718	0	0	5-8	1-8
H	718	0	718	0	0	5-8	1-8

UNFACTORED REACTIONS

JT	1ST LCASE COMBINED	MAX./MIN. COMPONENT REACTIONS SNOW	LIVE	PERM.LIVE	WIND	DEAD	SOIL
L	510	320 / 0	0 / 0	0 / 0	0 / 0	191 / 0	0 / 0
H	510	320 / 0	0 / 0	0 / 0	0 / 0	191 / 0	0 / 0

BEARING MATERIAL TO BE SPF NO.2 OR BETTER AT JOINT(S) L, H
BEARING SIZE FACTOR = 1.15 AT JNT(S) L, H (BASED ON SUPPORT DEPTH = 1-8)

BRACING

TOP CHORD TO BE SHEATHED OR MAX. PURLIN SPACING = 5.55 FT.
MAX. UNBRACED BOTTOM CHORD LENGTH = 10.00 FT OR RIGID CEILING DIRECTLY APPLIED.

ALL PITCH BREAKS AND PERIMETER CORNER JOINTS MUST BE LATERALLY RESTRAINED.

LOADING

TOTAL LOAD CASES: (4)

CHORDS

MEMB. FR-TO	MAX. FACTORED FORCE (LBS)	FACTORED VERT. LOAD LC1 (PLF) FROM	TO	MAX CSI (LC)	MAX. UNBRAC LENGTH
A- B	0 / 28	-78.0	-78.0	0.05 (1)	10.00
B- C	-1273 / 0	-78.0	-78.0	0.15 (1)	5.55
C- D	-683 / 0	-78.0	-78.0	0.21 (1)	6.25
D- E	-683 / 0	-78.0	-78.0	0.21 (1)	6.25
E- F	-1273 / 0	-78.0	-78.0	0.15 (1)	5.55
F- G	0 / 28	-78.0	-78.0	0.05 (1)	10.00
L- B	-699 / 0	0.0	0.0	0.05 (1)	7.81
H- F	-699 / 0	0.0	0.0	0.05 (1)	7.81
L- K	0 / 0	-18.5	-18.5	0.02 (4)	10.00
K- J	0 / 874	-18.5	-18.5	0.21 (1)	10.00
J- I	0 / 874	-18.5	-18.5	0.21 (1)	10.00
I- H	0 / 0	-18.5	-18.5	0.02 (4)	10.00

WEBS

MEMB. FR-TO	MAX. FACTORED FORCE (LBS)	MAX CSI (LC)
J- D	0 / 758	0.17 (1)
J- E	-391 / 0	0.15 (1)
I- E	0 / 130	0.03 (4)
C- J	-391 / 0	0.15 (1)
K- C	0 / 130	0.03 (4)
B- K	0 / 913	0.21 (1)
I- F	0 / 913	0.21 (1)

DESIGN CRITERIA

SPECIFIED LOADS:

TOP CH.	LL	=	21.0	PSF
	DL	=	6.0	PSF
BOT CH.	LL	=	0.0	PSF
	DL	=	7.4	PSF
TOTAL LOAD		=	34.4	PSF

SPACING = 24.0 IN. C/C

THIS TRUSS IS DESIGNED FOR RESIDENTIAL OR SMALL BUILDING REQUIREMENTS OF PART 9, NBCC 2010, NBCC 2015

THIS DESIGN COMPLIES WITH:
- PART 9 OF OBC 2012, OBC 2018
- CSA 086-09, CSA 086-14
- TPIC 2011, TPIC 2014

(55 % OF 23.0 P.S.F. G.S.L. PLUS 8.4 P.S.F. RAIN LOAD) EQUALS 21.0 P.S.F. SPECIFIED ROOF LIVE LOAD

ALLOWABLE DEFL.(LL)= L/360 (0.45")
CALCULATED VERT. DEFL.(LL) = L/ 999 (0.03")
ALLOWABLE DEFL.(TL)= L/360 (0.45")
CALCULATED VERT. DEFL.(TL) = L/ 999 (0.08")

CSI: TC=0.21/1.00 (C-D:1) , BC=0.21/1.00 (J-K:1) , WB=0.21/1.00 (B-K:1) , SSI=0.10/1.00 (C-D:1)

DOL LUMBER=1.00 NAIL=1.00 LS BEND=1.10 COMP=1.10 SHEAR=1.10 TENS= 1.10

COMPANION LIVE LOAD FACTOR = 1.00

AUTOSOLVE HEELS OFF

TRUSS PLATE MANUFACTURER IS NOT RESPONSIBLE FOR QUALITY CONTROL IN THE TRUSS MANUFACTURING PLANT .

NAIL VALUES

PLATE	GRIP(DRY) (PSI) MAX	MIN	SHEAR (PLI) MAX	MIN	SECTION (PLI) MAX	MIN
MT20	618	354	1667	788	1987	1656

PLATE PLACEMENT TOL. = 0.250 inches

PLATE ROTATION TOL. = 5.0 Deg.

JSI GRIP= 0.69 (K) (INPUT = 0.90)
JSI METAL= 0.23 (F) (INPUT = 1.00)

A-18023061

JOB NAME	TRUSS NAME	QUANTITY	PLY	JOB DESC.	DRWG NO.
292566	H16	1	2	TRUSS DESC.	

Alpa Roof Truss, Maple

Version 8.200 S Jan 6 2018 MiTek Industries, Inc. Thu Feb 15 08:20:03 2018 Page 1
ID:84gOFYESM8s1JmDO6_uSGRyQWjP-hTHcU1SiLmaWSxJLMA54TZ88uQueVxRpC99fyEzkz1w

Scale = 1:52.8

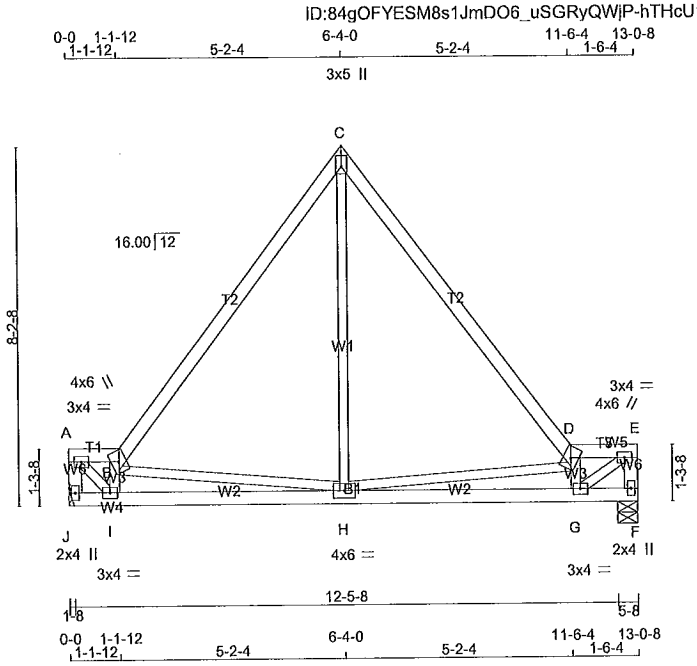

TOTAL WEIGHT = 2 X 57 = 115 lb (M)

LUMBER
N. L. G. A. RULES

CHORDS	SIZE		LUMBER	DESCR.
J - A	2x4	DRY	No.2	SPF
A - B	2x4	DRY	No.2	SPF
B - C	2x4	DRY	No.2	SPF
C - D	2x4	DRY	No.2	SPF
D - E	2x4	DRY	No.2	SPF
F - E	2x4	DRY	No.2	SPF
J - F	2x4	DRY	No.2	SPF
ALL WEBS	2x3	DRY	No.2	SPF

DRY: SEASONED LUMBER.

DESIGN CONSISTS OF 2 TRUSSES BUILT SEPARATELY THEN FASTENED TOGETHER AS FOLLOWS:

CHORDS	#ROWS	SURFACE SPACING (IN)	LOAD(PLF)
TOP CHORDS : (0.122"X3") SPIRAL NAILS			
J- A	1	12	TOP
A- B	1	12	SIDE(8.2)
B- C	1	12	SIDE(5.0)
C- D	1	12	SIDE(5.0)
D- E	1	12	SIDE(8.2)
E- F	1	12	TOP
BOTTOM CHORDS : (0.122"X3") SPIRAL NAILS			
J- F	1	12	SIDE(2.2)
WEBS : (0.122"X3") SPIRAL NAILS			
2x3	1	6	

NAILS TO BE DRIVEN FROM ONE SIDE ONLY.

TOP - COMPONENTS ARE LOADED FROM THE TOP AND MUST BE PLACED ON TOP EDGE OF ALL PLIES FOR THE LOAD TO BE TRANSFERRED TO EACH PLY.

SIDE - PLF SHOWN IS THE EQUIVALENT UDL APPLIED TO ONE SIDE THAT THE CORRESPONDING NAILING PATTERN SHALL BE CAPABLE OF TRANSFERING. REMAINING PLF MUST BE APPLIED ON THE OPPOSITE SIDE OR ON THE TOP.

NOTE: Lateral brace(s) shown shall be 1x4 for Part 9 design as per OBC 9.23.13.11, and no less than 2x4 for Part 4 design

REGISTERED PROFESSIONAL ENGINEER
02/15/2018
EDWIN C. FOK
PROVINCE OF ONTARIO

DIMENSIONS, SUPPORTS AND LOADINGS SPECIFIED BY FABRICATOR TO BE VERIFIED BY BUILDING DESIGNER

BEARINGS

JT	FACTORED GROSS REACTION VERT	HORZ	MAXIMUM FACTORED GROSS REACTION DOWN	HORZ	UPLIFT	INPUT BRG IN-SX	REQRD BRG IN-SX
J	762	0	762	0	0	HANGER BY OTHERS MIN. SEAT SIZE: 1-8	
F	762	0	762	0	0	5-8	1-8

UNFACTORED REACTIONS

JT	1ST LCASE COMBINED	MAX./MIN. COMPONENT REACTIONS SNOW	LIVE	PERM.LIVE	WIND	DEAD	SOIL
J	543	331 / 0	0 / 0	0 / 0	0 / 0	212 / 0	0 / 0
F	543	331 / 0	0 / 0	0 / 0	0 / 0	212 / 0	0 / 0

BEARING MATERIAL TO BE SPF NO.2 OR BETTER AT JOINT(S) F

BRACING
TOP CHORD TO BE SHEATHED OR MAX. PURLIN SPACING = 6.25 FT.
MAX. UNBRACED BOTTOM CHORD LENGTH = 10.00 FT OR RIGID CEILING DIRECTLY APPLIED.

ALL PITCH BREAKS AND PERIMETER CORNER JOINTS MUST BE LATERALLY RESTRAINED.

LOADING
TOTAL LOAD CASES: (4)

CHORDS

MEMB. FR-TO	MAX. FACTORED FORCE (LBS)	FACTORED VERT. LOAD LC1 (PLF) FROM	TO	MAX CSI (LC)	MAX. UNBRAC LENGTH
J- A	-740 / 0	0.0	0.0	0.04 (1)	7.81
A- B	-747 / 0	-94.4	-94.4	0.01 (1)	6.25
B- C	-544 / 0	-94.4	-94.4	0.25 (1)	6.25
C- D	-544 / 0	-94.4	-94.4	0.25 (1)	6.25
D- E	-976 / 0	-94.4	-94.4	0.02 (1)	6.25
F- E	-730 / 0	0.0	0.0	0.04 (1)	7.81
J- I	0 / 0	-22.4	-22.4	0.03 (4)	10.00
I- H	0 / 820	-22.4	-22.4	0.13 (1)	10.00
H- G	0 / 1047	-22.4	-22.4	0.15 (1)	10.00
G- F	0 / 0	-22.4	-22.4	0.02 (4)	10.00

WEBS

MEMB. FR-TO	MAX. FACTORED FORCE (LBS)	MAX CSI (LC)
A- I	0 / 1035	0.13 (1)
I- B	-678 / 0	0.05 (1)
B- H	-501 / 0	0.13 (1)
H- C	0 / 378	0.05 (4)
H- D	-731 / 0	0.19 (1)
G- D	-654 / 0	0.05 (1)
G- E	0 / 1194	0.15 (1)

DESIGN CRITERIA

SPECIFIED LOADS:

TOP CH.	LL	=	21.0	PSF
	DL	=	6.0	PSF
BOT CH.	LL	=	0.0	PSF
	DL	=	7.4	PSF
TOTAL LOAD		=	34.4	PSF

SPACING = 24.0 IN. C/C

LOADING IN ALL FLAT SECTIONS BASED ON A SLOPE OF 2.00/12 MINIMUM

GIRDER TYPE: CPrimeHip
SIDE SETBACK = 0-0
END SETBACK = 2-10-2
END WALL WIDTH = 0-0
CORNER FRAMING TYPE: CONVENTIONAL
END JACK TYPE: CONVENTIONAL
APPLIED TO FRONT SIDE
- ADDT'L LOADS BASED ON 55 % OF GSL.

THIS TRUSS IS DESIGNED FOR RESIDENTIAL OR SMALL BUILDING REQUIREMENTS OF PART 9, NBCC 2010, NBCC 2015

THIS DESIGN COMPLIES WITH:
- PART 9 OF OBC 2012, OBC 2018
- CSA 086-09, CSA 086-14
- TPIC 2011, TPIC 2014

(55 % OF 23.0 P.S.F. G.S.L. PLUS 8.4 P.S.F. RAIN LOAD) EQUALS 21.0 P.S.F. SPECIFIED ROOF LIVE LOAD

ALLOWABLE DEFL.(LL)= L/360 (0.43")
CALCULATED VERT. DEFL.(LL) = L/ 999 (0.01")
ALLOWABLE DEFL.(TL)= L/360 (0.43")
CALCULATED VERT. DEFL.(TL) = L/ 999 (0.03")

CSI: TC=0.25/1.00 (B-C:1) , BC=0.15/1.00 (G-H:1) , WB=0.19/1.00 (D-H:1) , SSI=0.06/1.00 (B-C:1)

DOL LUMBER=1.00 NAIL=1.00 LS BEND=1.00 COMP=1.00 SHEAR=1.00 TENS= 1.00

COMPANION LIVE LOAD FACTOR = 1.00

TRUSS PLATE MANUFACTURER IS NOT RESPONSIBLE FOR QUALITY CONTROL IN THE TRUSS MANUFACTURING PLANT .

NAIL VALUES

PLATE	GRIP(DRY) (PSI) MAX	MIN	SHEAR (PLI) MAX	MIN	SECTION (PLI) MAX	MIN
MT20	618	354	1667	788	1987	1656

PLATE PLACEMENT TOL. = 0.250 Inches

PLATE ROTATION TOL. = 5.0 Deg.

JSI GRIP= 0.90 (G) (INPUT = 0.90)
JSI METAL= 0.20 (G) (INPUT = 1.00)

A-18023062

CONTINUED ON PAGE 2

JOB NAME	TRUSS NAME	QUANTITY	PLY	JOB DESC.	DRWG NO.
292566	H16	1	2	TRUSS DESC.	

Alpa Roof Truss, Maple

ID:84gOFYESM8s1JmDO6_uSGRyQWjP-9gr_hNTK64iN45uYwucJ0nhJeqEtEOhyRpvCVhzkz1v

PLATES (table is in inches)

JT	TYPE	PLATES	W	LEN	Y	X
A	TMVW-t	MT20	3.0	4.0		
B	TTWW+m	MT20	4.0	6.0		
C	TTW+p	MT20	3.0	5.0	2.00	Edge
D	TTWW+m	MT20	4.0	6.0		
E	TMVW-t	MT20	3.0	4.0		
F	BMV1+p	MT20	2.0	4.0		
G	BMWW-t	MT20	3.0	4.0		
H	BMWWW-t	MT20	4.0	6.0		
I	BMWW-t	MT20	3.0	4.0		
J	BMV1+p	MT20	2.0	4.0		

Edge - INDICATES REFERENCE CORNER OF PLATE TOUCHES EDGE OF CHORD.

NOTE: Lateral brace(s) shown shall be 1x4 for Part 9 design as per OBC 9.23.13.11, and no less than 2x4 for Part 4 design

REGISTERED PROFESSIONAL ENGINEER
02/15/2018
EDWIN C. FOK
PROVINCE OF ONTARIO

A-18023062(r)

JOB NAME	TRUSS NAME	QUANTITY	PLY	JOB DESC.	DRWG NO.
292566	H17	3	1	TRUSS DESC.	

Alpa Roof Truss, Maple

Version 8.200 S Jan 6 2018 MiTek Industries, Inc. Thu Feb 15 08:14:55 2018 Page 1

ID:84gOFYESM8s1JmDO6_uSGRyQWjP-iDgArjkVt7nDVcm9KUZr_cNWkGn3KefTNEYL95zkz6k

Scale = 1:50.8

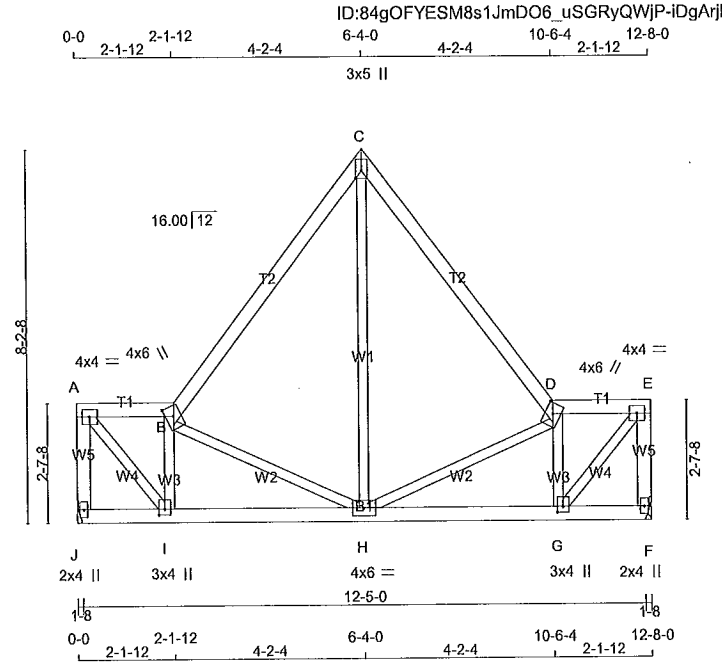

TOTAL WEIGHT = 3 X 62 = 185 lb

[M][F]

LUMBER

N. L. G. A. RULES

CHORDS	SIZE		LUMBER	DESCR.
J - A	2x4	DRY	No.2	SPF
A - B	2x4	DRY	No.2	SPF
B - C	2x4	DRY	No.2	SPF
C - D	2x4	DRY	No.2	SPF
D - E	2x4	DRY	No.2	SPF
F - E	2x4	DRY	No.2	SPF
J - F	2x4	DRY	No.2	SPF
ALL WEBS	2x3	DRY	No.2	SPF

DRY: SEASONED LUMBER.

PLATES (table is in Inches)

JT	TYPE	PLATES	W	LEN	Y	X
A	TMVW-t	MT20	4.0	4.0		
B	TTWW+m	MT20	4.0	6.0	2.75	2.00
C	TTW+p	MT20	3.0	5.0	2.00	Edge
D	TTWW+m	MT20	4.0	6.0	2.75	2.00
E	TMVW-t	MT20	4.0	4.0		
F	BMV1+p	MT20	2.0	4.0		
G	BMWW+t	MT20	3.0	4.0	1.50	1.50
H	BMWWW-t	MT20	4.0	6.0		
I	BMWW+t	MT20	3.0	4.0	1.50	1.50
J	BMV1+p	MT20	2.0	4.0		

Edge - INDICATES REFERENCE CORNER OF PLATE TOUCHES EDGE OF CHORD.

NOTE: Lateral brace(s) shown shall be 1x4 for Part 9 design as per OBC 9.23.13.11, and no less than 2x4 for Part 4 design

REGISTERED PROFESSIONAL ENGINEER
02/15/2018
EDWIN C. FOK
PROVINCE OF ONTARIO

DIMENSIONS, SUPPORTS AND LOADINGS SPECIFIED BY FABRICATOR TO BE VERIFIED BY BUILDING DESIGNER

BEARINGS

JT	FACTORED GROSS REACTION VERT	HORZ	MAXIMUM FACTORED GROSS REACTION DOWN	HORZ	UPLIFT	INPUT BRG IN-SX	REQRD BRG IN-SX
J	611	0	611	0	0	HANGER BY OTHERS MIN. SEAT SIZE: 1-8	
F	611	0	611	0	0	HANGER BY OTHERS MIN. SEAT SIZE: 1-8	

UNFACTORED REACTIONS

JT	1ST LCASE COMBINED	MAX./MIN. COMPONENT REACTIONS SNOW	LIVE	PERM.LIVE	WIND	DEAD	SOIL
J	436	266 / 0	0 / 0	0 / 0	0 / 0	170 / 0	0 / 0
F	436	266 / 0	0 / 0	0 / 0	0 / 0	170 / 0	0 / 0

BRACING

TOP CHORD TO BE SHEATHED OR MAX. PURLIN SPACING = 6.25 FT.
MAX. UNBRACED BOTTOM CHORD LENGTH = 10.00 FT OR RIGID CEILING DIRECTLY APPLIED.

ALL PITCH BREAKS AND PERIMETER CORNER JOINTS MUST BE LATERALLY RESTRAINED.

LOADING

TOTAL LOAD CASES: (4)

CHORDS

MEMB. FR-TO	MAX. FACTORED FORCE (LBS)	FACTORED VERT. LOAD LC1 (PLF) FROM	TO	MAX CSI (LC)	MAX. UNBRAC LENGTH
J- A	-595 / 0	0.0	0.0	0.08 (1)	7.81
A- B	-456 / 0	-78.0	-78.0	0.05 (1)	6.25
B- C	-417 / 0	-78.0	-78.0	0.18 (1)	6.25
C- D	-417 / 0	-78.0	-78.0	0.18 (1)	6.25
D- E	-456 / 0	-78.0	-78.0	0.05 (1)	6.25
F- E	-595 / 0	0.0	0.0	0.08 (1)	7.81
J- I	0 / 0	-18.5	-18.5	0.04 (4)	10.00
I- H	0 / 477	-18.5	-18.5	0.12 (4)	10.00
H- G	0 / 477	-18.5	-18.5	0.12 (4)	10.00
G- F	0 / 0	-18.5	-18.5	0.04 (4)	10.00

WEBS

MEMB. FR-TO	MAX. FACTORED FORCE (LBS)	MAX CSI (LC)
A- I	0 / 693	0.16 (1)
I- B	-467 / 0	0.08 (1)
B- H	-257 / 0	0.10 (1)
H- C	0 / 338	0.08 (1)
H- D	-257 / 0	0.10 (1)
G- D	-467 / 0	0.08 (1)
G- E	0 / 693	0.16 (1)

DESIGN CRITERIA

SPECIFIED LOADS:

TOP CH.	LL	=	21.0	PSF
	DL	=	6.0	PSF
BOT CH.	LL	=	0.0	PSF
	DL	=	7.4	PSF
TOTAL LOAD		=	34.4	PSF

SPACING = 24.0 IN. C/C

LOADING IN ALL FLAT SECTIONS BASED ON A SLOPE OF 2.00/12 MINIMUM

THIS TRUSS IS DESIGNED FOR RESIDENTIAL OR SMALL BUILDING REQUIREMENTS OF PART 9, NBCC 2010, NBCC 2015

THIS DESIGN COMPLIES WITH:
- PART 9 OF OBC 2012, OBC 2018
- CSA 086-09, CSA 086-14
- TPIC 2011, TPIC 2014

(55 % OF 23.0 P.S.F. G.S.L. PLUS 8.4 P.S.F. RAIN LOAD) EQUALS 21.0 P.S.F. SPECIFIED ROOF LIVE LOAD

ALLOWABLE DEFL.(LL)= L/360 (0.42")
CALCULATED VERT. DEFL.(LL) = L/ 999 (0.01")
ALLOWABLE DEFL.(TL)= L/360 (0.42")
CALCULATED VERT. DEFL.(TL) = L/ 999 (0.03")

CSI: TC=0.18/1.00 (C-D:1) , BC=0.12/1.00 (H-I:4) , WB=0.16/1.00 (A-I:1) , SSI=0.08/1.00 (C-D:1)

DOL LUMBER=1.00 NAIL=1.00 LS BEND=1.10 COMP=1.10 SHEAR=1.10 TENS= 1.10

COMPANION LIVE LOAD FACTOR = 1.00

TRUSS PLATE MANUFACTURER IS NOT RESPONSIBLE FOR QUALITY CONTROL IN THE TRUSS MANUFACTURING PLANT .

NAIL VALUES

PLATE	GRIP(DRY) (PSI) MAX	MIN	SHEAR (PLI) MAX	MIN	SECTION (PLI) MAX	MIN
MT20	618	354	1667	788	1987	1656

PLATE PLACEMENT TOL. = 0.250 inches

PLATE ROTATION TOL. = 5.0 Deg.

JSI GRIP= 0.79 (I) (INPUT = 0.90)
JSI METAL= 0.28 (I) (INPUT = 1.00)

A-18023063

JOB NAME	TRUSS NAME	QUANTITY	PLY	JOB DESC.	DRWG NO.
292566	H18	2	1	TRUSS DESC.	

Alpa Roof Truss, Maple

Version 8.200 S Jan 6 2018 MiTek Industries, Inc. Thu Feb 15 08:15:02 2018 Page 1
ID:84gOFYESM8s1JmDO6_uSGRyQWjP-?ZbpJ6puEHfDrhoVESBUn5Alp48STr5V_qlDuBzkz6d

Scale = 1:60.5

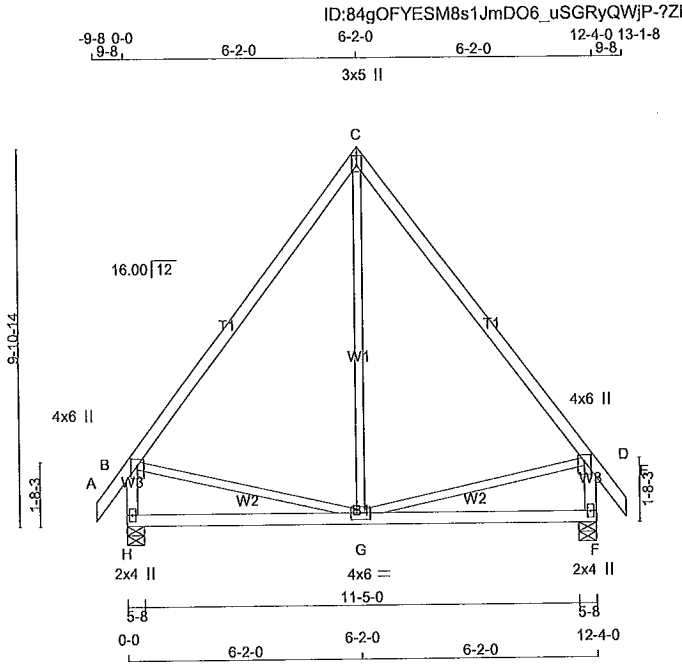

TOTAL WEIGHT = 2 X 61 = 123 lb

[M][F]

LUMBER

N. L. G. A. RULES

CHORDS	SIZE		LUMBER	DESCR.
A - C	2x4	DRY	2100F 1.8E	SPF
C - E	2x4	DRY	2100F 1.8E	SPF
H - B	2x4	DRY	No.2	SPF
F - D	2x4	DRY	No.2	SPF
H - F	2x4	DRY	No.2	SPF
ALL WEBS EXCEPT	2x3	DRY	No.2	SPF

DRY: SEASONED LUMBER.

PLATES (table is in inches)

JT	TYPE	PLATES	W	LEN	Y	X
B	TMVW+p	MT20	4.0	6.0	2.00	2.00
C	TTW+p	MT20	3.0	5.0	2.00	Edge
D	TMVW+p	MT20	4.0	6.0	2.00	2.00
F	BMV1+p	MT20	2.0	4.0		
G	BMWWW-t	MT20	4.0	6.0		
H	BMV1+p	MT20	2.0	4.0		

Edge - INDICATES REFERENCE CORNER OF PLATE TOUCHES EDGE OF CHORD.

NOTE: Lateral brace(s) shown shall be 1x4 for Part 9 design as per OBC 9.23.13.11, and no less than 2x4 for Part 4 design

REGISTERED PROFESSIONAL ENGINEER
02/15/2018
EDWIN C. FOK
PROVINCE OF ONTARIO

DIMENSIONS, SUPPORTS AND LOADINGS SPECIFIED BY FABRICATOR TO BE VERIFIED BY BUILDING DESIGNER

BEARINGS

JT	FACTORED GROSS REACTION VERT	HORZ	MAXIMUM FACTORED GROSS REACTION DOWN	HORZ	UPLIFT	INPUT BRG IN-SX	REQRD BRG IN-SX
H	666	0	666	0	0	5-8	1-8
F	666	0	666	0	0	5-8	1-8

UNFACTORED REACTIONS

JT	1ST LCASE COMBINED	MAX./MIN. COMPONENT REACTIONS SNOW	LIVE	PERM.LIVE	WIND	DEAD	SOIL
H	473	297 / 0	0 / 0	0 / 0	0 / 0	176 / 0	0 / 0
F	473	297 / 0	0 / 0	0 / 0	0 / 0	176 / 0	0 / 0

BEARING MATERIAL TO BE SPF NO.2 OR BETTER AT JOINT(S) H, F

BRACING

TOP CHORD TO BE SHEATHED OR MAX. PURLIN SPACING = 6.25 FT.
MAX. UNBRACED BOTTOM CHORD LENGTH = 10.00 FT OR RIGID CEILING DIRECTLY APPLIED.

ALL PITCH BREAKS AND PERIMETER CORNER JOINTS MUST BE LATERALLY RESTRAINED.

LOADING

TOTAL LOAD CASES: (4)

CHORDS

MEMB. FR-TO	MAX. FACTORED FORCE (LBS)	FACTORED VERT. LOAD LC1 (PLF) FROM	TO	MAX CSI (LC)	MAX. UNBRAC LENGTH
A- B	0 / 28	-78.0	-78.0	0.03 (1)	10.00
B- C	-336 / 0	-78.0	-78.0	0.25 (1)	6.25
C- D	-336 / 0	-78.0	-78.0	0.25 (1)	6.25
D- E	0 / 28	-78.0	-78.0	0.03 (1)	10.00
H- B	-622 / 0	0.0	0.0	0.07 (1)	7.81
F- D	-622 / 0	0.0	0.0	0.07 (1)	7.81
H- G	0 / 0	-18.5	-18.5	0.20 (4)	10.00
G- F	0 / 0	-18.5	-18.5	0.20 (4)	10.00

WEBS

MEMB. FR-TO	MAX. FACTORED FORCE (LBS)	MAX CSI (LC)
G- C	0 / 123	0.04 (4)
B- G	0 / 206	0.05 (1)
G- D	0 / 206	0.05 (1)

DESIGN CRITERIA

SPECIFIED LOADS:

TOP CH.	LL =	21.0	PSF
	DL =	6.0	PSF
BOT CH.	LL =	0.0	PSF
	DL =	7.4	PSF
TOTAL LOAD	=	34.4	PSF

SPACING = 24.0 IN. C/C

THIS TRUSS IS DESIGNED FOR RESIDENTIAL OR SMALL BUILDING REQUIREMENTS OF PART 9, NBCC 2010, NBCC 2015

THIS DESIGN COMPLIES WITH:
- PART 9 OF OBC 2012, OBC 2018
- CSA 086-09, CSA 086-14
- TPIC 2011, TPIC 2014

(55 % OF 23.0 P.S.F. G.S.L. PLUS 8.4 P.S.F. RAIN LOAD) EQUALS 21.0 P.S.F. SPECIFIED ROOF LIVE LOAD

ALLOWABLE DEFL.(LL)= L/360 (0.41")
CALCULATED VERT. DEFL.(LL) = L/ 999 (0.00")
ALLOWABLE DEFL.(TL)= L/360 (0.41")
CALCULATED VERT. DEFL.(TL) = L/ 999 (0.03")

CSI: TC=0.25/1.00 (B-C:1) , BC=0.20/1.00 (F-G:4) , WB=0.05/1.00 (B-G:1) , SSI=0.11/1.00 (B-C:1)

DOL LUMBER=1.00 NAIL=1.00 LS BEND=1.10 COMP=1.10 SHEAR=1.10 TENS= 1.10

COMPANION LIVE LOAD FACTOR = 1.00

TRUSS PLATE MANUFACTURER IS NOT RESPONSIBLE FOR QUALITY CONTROL IN THE TRUSS MANUFACTURING PLANT .

NAIL VALUES

PLATE	GRIP(DRY) (PSI) MAX	MIN	SHEAR (PLI) MAX	MIN	SECTION (PLI) MAX	MIN
MT20	618	354	1667	788	1987	1656

PLATE PLACEMENT TOL. = 0.250 inches

PLATE ROTATION TOL. = 5.0 Deg.

JSI GRIP= 0.38 (G) (INPUT = 0.90)
JSI METAL= 0.18 (D) (INPUT = 1.00)

A-18023064

JOB NAME	TRUSS NAME	QUANTITY	PLY	JOB DESC.	DRWG NO.
292566	H18A	1	2	TRUSS DESC.	

Alpa Roof Truss, Maple

Version 8.200 S Jan 6 2018 MiTek Industries, Inc. Thu Feb 15 08:18:36 2018 Page 1
ID:84gOFYESM8s1JmDO6_uSGRyQWjP-kkWjDHP7r1dsWZ9dmP1gSD1GKLB?ccs?B6aYPnzkz3H

Scale: 3/16"=1'

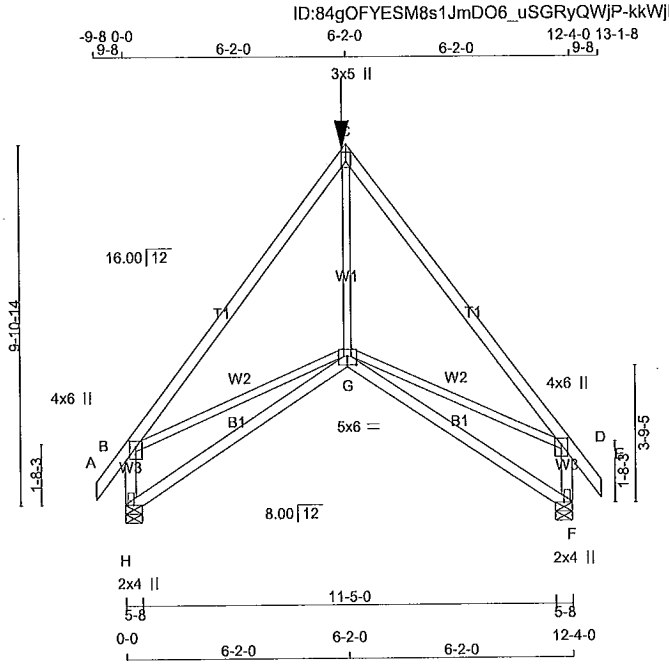

TOTAL WEIGHT = 2 X 63 = 125 lb

[M]

LUMBER

N. L. G. A. RULES

CHORDS	SIZE		LUMBER	DESCR.
A - C	2x4	DRY	2100F 1.8E	SPF
C - E	2x4	DRY	2100F 1.8E	SPF
H - B	2x4	DRY	No.2	SPF
F - D	2x4	DRY	No.2	SPF
H - G	2x4	DRY	No.2	SPF
G - F	2x4	DRY	No.2	SPF
ALL WEBS EXCEPT	2x3	DRY	No.2	SPF

DRY: SEASONED LUMBER.

DESIGN CONSISTS OF 2 TRUSSES BUILT SEPARATELY THEN FASTENED TOGETHER AS FOLLOWS:

CHORDS	#ROWS	SURFACE SPACING (IN)	LOAD(PLF)
TOP CHORDS : (0.122"X3") SPIRAL NAILS			
A- C	1	12	SIDE(65.9)
C- E	1	12	SIDE(65.9)
H- B	1	12	TOP
F- D	1	12	TOP
BOTTOM CHORDS : (0.122"X3") SPIRAL NAILS			
H- G	1	12	SIDE(9.3)
G- F	1	12	SIDE(9.3)
WEBS : (0.122"X3") SPIRAL NAILS			
G- C	1	6	SIDE(128.7)
2x3	1	6	

NAILS TO BE DRIVEN FROM ONE SIDE ONLY.

GIRDER NAILING ASSUMES NAILED HANGERS ARE FASTENED WITH MIN. 3-0 INCH NAILS.

TOP - COMPONENTS ARE LOADED FROM THE TOP AND MUST BE PLACED ON TOP EDGE OF ALL PLIES FOR THE LOAD TO BE TRANSFERRED TO EACH PLY.

SIDE - PLF SHOWN IS THE EQUIVALENT UDL APPLIED TO ONE SIDE THAT THE CORRESPONDING NAILING PATTERN SHALL BE CAPABLE OF TRANSFERING. REMAINING PLF MUST BE APPLIED ON THE OPPOSITE SIDE OR ON THE TOP.

NOTE: Lateral brace(s) shown shall be 1x4 for Part 9 design as per OBC 9.23.13.11, and no less than 2x4 for Part 4 design

REGISTERED PROFESSIONAL ENGINEER
02/15/2018
EDWIN C. FOK
PROVINCE OF ONTARIO

DIMENSIONS, SUPPORTS AND LOADINGS SPECIFIED BY FABRICATOR TO BE VERIFIED BY BUILDING DESIGNER

BEARINGS

JT	FACTORED GROSS REACTION VERT	HORZ	MAXIMUM FACTORED GROSS REACTION DOWN	HORZ	UPLIFT	INPUT BRG IN-SX	REQRD BRG IN-SX
H	1288	0	1288	0	0	5-8	1-8
F	1288	0	1288	0	0	5-8	1-8

UNFACTORED REACTIONS

JT	1ST LCASE COMBINED	MAX./MIN. COMPONENT REACTIONS SNOW	LIVE	PERM.LIVE	WIND	DEAD	SOIL
H	928	514 / 0	0 / 0	0 / 0	0 / 0	414 / 0	0 / 0
F	928	514 / 0	0 / 0	0 / 0	0 / 0	414 / 0	0 / 0

BEARING MATERIAL TO BE SPF NO.2 OR BETTER AT JOINT(S) H, F

BRACING

TOP CHORD TO BE SHEATHED OR MAX. PURLIN SPACING = 6.25 FT.
MAX. UNBRACED BOTTOM CHORD LENGTH = 10.00 FT OR RIGID CEILING DIRECTLY APPLIED.

ALL PITCH BREAKS AND PERIMETER CORNER JOINTS MUST BE LATERALLY RESTRAINED.

LOADING

TOTAL LOAD CASES: (4)

CHORDS

MEMB. FR-TO	MAX. FACTORED FORCE (LBS)	FACTORED VERT. LOAD (PLF) FROM	TO	LC1 MAX CSI (LC)	MAX. UNBRAC LENGTH
A- B	0 / 28	-78.0	-78.0	0.02 (1)	10.00
B- C	-1546 / 0	-78.0	-78.0	0.22 (1)	6.25
C- D	-1546 / 0	-78.0	-78.0	0.22 (1)	6.25
D- E	0 / 28	-78.0	-78.0	0.02 (1)	10.00
H- B	-1170 / 0	0.0	0.0	0.07 (1)	7.81
F- D	-1170 / 0	0.0	0.0	0.07 (1)	7.81
H- G	0 / 0	-38.5	-38.5	0.24 (4)	10.00
G- F	0 / 0	-38.5	-38.5	0.24 (4)	10.00

WEBS

MEMB. FR-TO	MAX. FACTORED FORCE (LBS)	MAX CSI (LC)
G- C	0 / 993	0.12 (1)
B- G	0 / 1001	0.12 (1)
G- D	0 / 1001	0.12 (1)

FACTORED CONCENTRATED LOADS (LBS)

JT	LOC.	LC1	MAX-	MAX+	FACE	DIR.	TYPE
C	6-2-0	-999	-999	—	FRONT	VERT	TOTAL

DESIGN CRITERIA

*** SPECIAL LOADS ANALYSIS ***
GEOMETRY AND/OR BASIC LOADS CHANGED BY USER.
LOADS WERE DERIVED FROM USER INPUT
NO FURTHER MODIFICATIONS WERE MADE

SPECIFIED LOADS:

TOP	CH.	LL	=	21.0	PSF
		DL	=	6.0	PSF
BOT	CH.	LL	=	0.0	PSF
		DL	=	7.4	PSF
TOTAL	LOAD		=	34.4	PSF

SPACING = 24.0 IN. C/C

*** NON STANDARD GIRDER ***
ADDT'L USER-DEFINED LOADS APPLIED TO ALL LOAD CASES.

THIS TRUSS IS DESIGNED FOR RESIDENTIAL OR SMALL BUILDING REQUIREMENTS OF PART 9, NBCC 2010, NBCC 2015

THIS DESIGN COMPLIES WITH:
- PART 9 OF OBC 2012, OBC 2018
- CSA 086-09, CSA 086-14
- TPIC 2011, TPIC 2014

(55 % OF 23.0 P.S.F. G.S.L. PLUS 8.4 P.S.F. RAIN LOAD) EQUALS 21.0 P.S.F. SPECIFIED ROOF LIVE LOAD

ALLOWABLE DEFL.(LL)= L/360 (0.41")
CALCULATED VERT. DEFL.(LL) = L/ 999 (0.01")
ALLOWABLE DEFL.(TL)= L/360 (0.41")
CALCULATED VERT. DEFL.(TL) = L/ 999 (0.10")

CSI: TC=0.22/1.00 (B-C:1) , BC=0.24/1.00 (G-H:4) , WB=0.12/1.00 (B-G:1) , SSI=0.07/1.00 (G-H:4)

DOL LUMBER=1.00 NAIL=1.00 LS BEND=1.00 COMP=1.00 SHEAR=1.00 TENS= 1.00

COMPANION LIVE LOAD FACTOR = 1.00

TRUSS PLATE MANUFACTURER IS NOT RESPONSIBLE FOR QUALITY CONTROL IN THE TRUSS MANUFACTURING PLANT .

NAIL VALUES

PLATE	GRIP(DRY) (PSI) MAX	MIN	SHEAR (PLI) MAX	MIN	SECTION (PLI) MAX	MIN
MT20	618	354	1667	788	1987	1656

PLATE PLACEMENT TOL. = 0.250 Inches

PLATE ROTATION TOL. = 5.0 Deg.

JSI GRIP= 0.76 (C) (INPUT = 0.90)
JSI METAL= 0.29 (F) (INPUT = 1.00)

A-18023065

CONTINUED ON PAGE 2

JOB NAME	TRUSS NAME	QUANTITY	PLY	JOB DESC.	DRWG NO.
292566	H18A	1	2	TRUSS DESC.	

Alpa Roof Truss, Maple

ID:84gOFYESM8s1JmDO6_uSGRyQWjP-kkWjDHP7r1dsWZ9dmP1gSD1GKLB?ccs?B6aYPnzkz3H

PLATES (table is in inches)

JT	TYPE	PLATES	W	LEN	Y	X
B	TMVW+p	MT20	4.0	6.0	2.00	2.00
C	TTW+p	MT20	3.0	5.0	2.00	Edge
D	TMVW+p	MT20	4.0	6.0	2.00	2.00
F	BMV1+p	MT20	2.0	4.0	Edge	
G	BBWWW-p	MT20	5.0	6.0	2.75	3.00
H	BMV1+p	MT20	2.0	4.0	Edge	

Edge - INDICATES REFERENCE CORNER OF PLATE TOUCHES EDGE OF CHORD.

HANGERS NOTES

1) SPECIAL HANGER(S) OR CONNECTION(S) REQUIRED TO SUPPORT CONCENTRATED LOAD(S) 998.6 lbs FACTORED DOWN AT 6-2-0 ON TOP CHORD. DESIGN FOR UNSPECIFIED CONNECTION(S) IS DELEGATED TO THE BUILDING DESIGNER.

NOTE: Lateral brace(s) shown shall be 1x4 for Part 9 design as per OBC 9.23.13.11, and no less than 2x4 for Part 4 design

REGISTERED PROFESSIONAL ENGINEER
02/15/2018
EDWIN C. FOK
PROVINCE OF ONTARIO

A-1802306S(2)

JOB NAME	TRUSS NAME	QUANTITY	PLY	JOB DESC.	DRWG NO.
292566	H18G	1	1	TRUSS DESC.	

Alpa Roof Truss, Maple

Version 8.200 S Jan 6 2018 MiTek Industries, Inc. Thu Feb 15 08:17:04 2018 Page 1

ID:84gOFYESM8s1JmDO6_uSGRyQWjP-Q1zxwqiQVm1vUR7yN4N5jqDbDGqp2_qT2oIgA6zkz4j

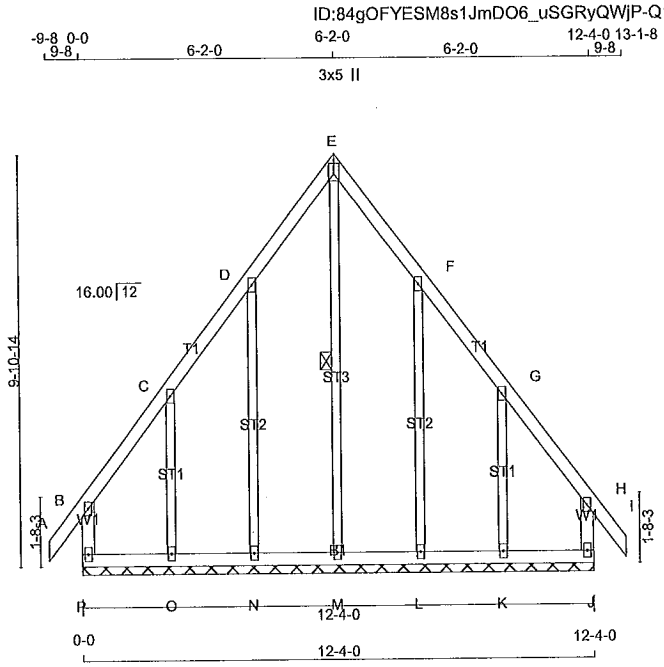

TOTAL WEIGHT = 69 lb [M]

LUMBER

N. L. G. A. RULES

CHORDS	SIZE		LUMBER	DESCR.
P - B	2x4	DRY	No.2	SPF
A - E	2x4	DRY	No.2	SPF
E - I	2x4	DRY	No.2	SPF
J - H	2x4	DRY	No.2	SPF
P - J	2x4	DRY	No.2	SPF
ALL WEBS	2x3	DRY	No.2	SPF
ALL GABLE WEBS	2x3	DRY	No.2	SPF

DRY: SEASONED LUMBER.

GABLE STUDS SPACED AT 2-0-0 OC.

PLATES (table is in inches)

JT	TYPE	PLATES	W	LEN	Y	X
B	TMV+p	MT20	2.0	4.0		
C, D, F, G						
C	TMW+w	MT20	2.0	4.0		
E	TTW+p	MT20	3.0	5.0	2.00	Edge
H	TMV+p	MT20	2.0	4.0		
J	BMV1+p	MT20	2.0	4.0		
K, L, M, N, O						
K	BMW1+w	MT20	2.0	4.0		
P	BMV1+p	MT20	2.0	4.0		

Edge - INDICATES REFERENCE CORNER OF PLATE TOUCHES EDGE OF CHORD.

NOTE: Lateral brace(s) shown shall be 1x4 for Part 9 design as per OBC 9.23.13.11, and no less than 2x4 for Part 4 design

REGISTERED PROFESSIONAL ENGINEER
02/15/2018
EDWIN C. FOK
PROVINCE OF ONTARIO

DIMENSIONS, SUPPORTS AND LOADINGS SPECIFIED BY FABRICATOR TO BE VERIFIED BY BUILDING DESIGNER

BEARINGS

THIS TRUSS DESIGNED FOR CONTINUOUS BEARINGS.

THIS TRUSS REQUIRES RIGID SHEATHING ON EXPOSED FACE.

BEARING MATERIAL TO BE SPF NO.2 OR BETTER AT JOINT(S)

BRACING

TOP CHORD TO BE SHEATHED OR MAX. PURLIN SPACING = 6.25 FT.
MAX. UNBRACED BOTTOM CHORD LENGTH = 10.00 FT OR RIGID CEILING DIRECTLY APPLIED.

ALL PITCH BREAKS AND PERIMETER CORNER JOINTS MUST BE LATERALLY RESTRAINED.

1 LATERAL BRACE(S) AT 1/ 2 LENGTH OF E-M.

END VERTICAL(S) MUST BE SHEATHED OR HAVE BRACES AS INDICATED IN THE MAX. UNBRACED LENGTH COLUMN OF THE TABLE BELOW

LOADING

TOTAL LOAD CASES: (4)

CHORDS

MEMB. FR-TO	MAX. FACTORED FORCE (LBS)	FACTORED VERT. LOAD LC1 (PLF) FROM	TO	MAX CSI (LC)	MAX. UNBRAC LENGTH
P- B	-187 / 0	0.0	0.0	0.03 (1)	7.81
A- B	0 / 28	-78.0	-78.0	0.05 (1)	10.00
B- C	-45 / 0	-78.0	-78.0	0.04 (1)	6.25
C- D	-36 / 0	-78.0	-78.0	0.04 (1)	6.25
D- E	-30 / 0	-78.0	-78.0	0.04 (1)	6.25
E- F	-30 / 0	-78.0	-78.0	0.04 (1)	6.25
F- G	-36 / 0	-78.0	-78.0	0.04 (1)	6.25
G- H	-45 / 0	-78.0	-78.0	0.04 (1)	6.25
H- I	0 / 28	-78.0	-78.0	0.05 (1)	10.00
J- H	-187 / 0	0.0	0.0	0.03 (1)	7.81
P- O	0 / 26	-18.5	-18.5	0.02 (1)	10.00
O- N	0 / 22	-18.5	-18.5	0.02 (4)	10.00
N- M	0 / 19	-18.5	-18.5	0.02 (4)	10.00
M- L	0 / 19	-18.5	-18.5	0.02 (4)	10.00
L- K	0 / 22	-18.5	-18.5	0.02 (4)	10.00
K- J	0 / 26	-18.5	-18.5	0.02 (1)	10.00

WEBS

MEMB. FR-TO	MAX. FACTORED FORCE (LBS)	MAX CSI (LC)
M- E	-118 / 0	0.07 (1)
N- D	-155 / 0	0.14 (1)
O- C	-150 / 0	0.05 (1)
L- F	-155 / 0	0.14 (1)
K- G	-150 / 0	0.05 (1)

DESIGN CRITERIA

SPECIFIED LOADS:

TOP CH.	LL	=	21.0	PSF
	DL	=	6.0	PSF
BOT CH.	LL	=	0.0	PSF
	DL	=	7.4	PSF
TOTAL LOAD		=	34.4	PSF

SPACING = 24.0 IN. C/C

THIS TRUSS IS DESIGNED FOR RESIDENTIAL OR SMALL BUILDING REQUIREMENTS OF PART 9, NBCC 2010, NBCC 2015

THIS DESIGN COMPLIES WITH:
- PART 9 OF OBC 2012, OBC 2018
- CSA 086-09, CSA 086-14
- TPIC 2011, TPIC 2014

DESIGN ASSUMPTIONS
-OVERHANG NOT TO BE ALTERED OR CUT OFF.

(55 % OF 23.0 P.S.F. G.S.L. PLUS 8.4 P.S.F. RAIN LOAD) EQUALS 21.0 P.S.F. SPECIFIED ROOF LIVE LOAD

CSI: TC=0.05/1.00 (H-I:1) , BC=0.02/1.00 (J-K:1) , WB=0.14/1.00 (D-N:1) , SSI=0.04/1.00 (D-E:1)

DOL LUMBER=1.00 NAIL=1.00 LS BEND=1.10 COMP=1.10 SHEAR=1.10 TENS= 1.10

COMPANION LIVE LOAD FACTOR = 1.00

TRUSS PLATE MANUFACTURER IS NOT RESPONSIBLE FOR QUALITY CONTROL IN THE TRUSS MANUFACTURING PLANT .

NAIL VALUES

PLATE	GRIP(DRY) (PSI) MAX	MIN	SHEAR (PLI) MAX	MIN	SECTION (PLI) MAX	MIN
MT20	618	354	1667	788	1987	1656

PLATE PLACEMENT TOL. = 0.250 Inches

PLATE ROTATION TOL. = 5.0 Deg.

JSI GRIP= 0.18 (B) (INPUT = 0.90)
JSI METAL= 0.10 (B) (INPUT = 1.00)

A-18023066

JOB NAME	TRUSS NAME	QUANTITY	PLY	JOB DESC.	DRWG NO.
292566	H18T	3	1	TRUSS DESC.	

Alpa Roof Truss, Maple

Version 8.200 S Jan 6 2018 MiTek Industries, Inc. Thu Feb 15 08:17:45 2018 Page 1
ID:84gOFYESM8s1JmDO6_uSGRyQWjP-jwxRWro8rMB5uklqHBcjtTQYconW9YrVThkL7Ezkz44

Scale: 3/16"=1'

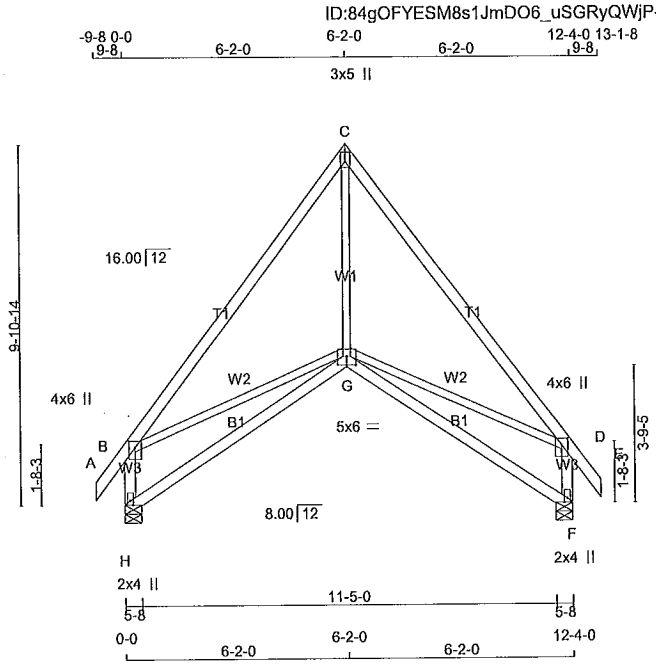

TOTAL WEIGHT = 3 X 63 = 188 lb

[M][F]

LUMBER
N. L. G. A. RULES

CHORDS	SIZE		LUMBER	DESCR.
A - C	2x4	DRY	2100F 1.8E	SPF
C - E	2x4	DRY	2100F 1.8E	SPF
H - B	2x4	DRY	No.2	SPF
F - D	2x4	DRY	No.2	SPF
H - G	2x4	DRY	No.2	SPF
G - F	2x4	DRY	No.2	SPF
ALL WEBS EXCEPT	2x3	DRY	No.2	SPF

DRY: SEASONED LUMBER.

PLATES (table is in inches)

JT	TYPE	PLATES	W	LEN	Y	X
B	TMVW+p	MT20	4.0	6.0	2.00	2.00
C	TTW+p	MT20	3.0	5.0	2.00	Edge
D	TMVW+p	MT20	4.0	6.0	2.00	2.00
F	BMV1+p	MT20	2.0	4.0	Edge	
G	BBWWW-p	MT20	5.0	6.0	2.75	3.00
H	BMV1+p	MT20	2.0	4.0	Edge	

Edge - INDICATES REFERENCE CORNER OF PLATE TOUCHES EDGE OF CHORD.

NOTE: Lateral brace(s) shown shall be 1x4 for Part 9 design as per OBC 9.23.13.11, and no less than 2x4 for Part 4 design

REGISTERED PROFESSIONAL ENGINEER
02/15/2018
EDWIN C. FOK
PROVINCE OF ONTARIO

DIMENSIONS, SUPPORTS AND LOADINGS SPECIFIED BY FABRICATOR TO BE VERIFIED BY BUILDING DESIGNER

BEARINGS

JT	FACTORED GROSS REACTION VERT	HORZ	MAXIMUM FACTORED GROSS REACTION DOWN	HORZ	UPLIFT	INPUT BRG IN-SX	REQRD BRG IN-SX
H	666	0	666	0	0	5-8	1-8
F	666	0	666	0	0	5-8	1-8

UNFACTORED REACTIONS

JT	1ST LCASE COMBINED	MAX./MIN. COMPONENT REACTIONS SNOW	LIVE	PERM.LIVE	WIND	DEAD	SOIL
H	473	297 / 0	0 / 0	0 / 0	0 / 0	176 / 0	0 / 0
F	473	297 / 0	0 / 0	0 / 0	0 / 0	176 / 0	0 / 0

BEARING MATERIAL TO BE SPF NO.2 OR BETTER AT JOINT(S) H, F

BRACING
TOP CHORD TO BE SHEATHED OR MAX. PURLIN SPACING = 6.25 FT.
MAX. UNBRACED BOTTOM CHORD LENGTH = 10.00 FT OR RIGID CEILING DIRECTLY APPLIED.

ALL PITCH BREAKS AND PERIMETER CORNER JOINTS MUST BE LATERALLY RESTRAINED.

LOADING
TOTAL LOAD CASES: (4)

CHORDS

MEMB. FR-TO	MAX. FACTORED FORCE (LBS)	FACTORED VERT. LOAD LC1 (PLF) FROM	TO	MAX CSI (LC)	MAX. UNBRAC LENGTH
A- B	0 / 28	-78.0	-78.0	0.03 (1)	10.00
B- C	-536 / 0	-78.0	-78.0	0.26 (1)	6.25
C- D	-536 / 0	-78.0	-78.0	0.26 (1)	6.25
D- E	0 / 28	-78.0	-78.0	0.03 (1)	10.00
H- B	-609 / 0	0.0	0.0	0.07 (1)	7.81
F- D	-609 / 0	0.0	0.0	0.07 (1)	7.81
H- G	0 / 0	-18.5	-18.5	0.21 (4)	10.00
G- F	0 / 0	-18.5	-18.5	0.21 (4)	10.00

WEBS

MEMB. FR-TO	MAX. FACTORED FORCE (LBS)	MAX CSI (LC)
G- C	0 / 376	0.08 (1)
B- G	0 / 347	0.08 (1)
G- D	0 / 347	0.08 (1)

DESIGN CRITERIA

SPECIFIED LOADS:

TOP CH.	LL	=	21.0	PSF
	DL	=	6.0	PSF
BOT CH.	LL	=	0.0	PSF
	DL	=	7.4	PSF
TOTAL LOAD		=	34.4	PSF

SPACING = 24.0 IN. C/C

THIS TRUSS IS DESIGNED FOR RESIDENTIAL OR SMALL BUILDING REQUIREMENTS OF PART 9, NBCC 2010, NBCC 2015

THIS DESIGN COMPLIES WITH:
- PART 9 OF OBC 2012, OBC 2018
- CSA 086-09, CSA 086-14
- TPIC 2011, TPIC 2014

(55 % OF 23.0 P.S.F. G.S.L. PLUS 8.4 P.S.F. RAIN LOAD) EQUALS 21.0 P.S.F. SPECIFIED ROOF LIVE LOAD

ALLOWABLE DEFL.(LL)= L/360 (0.41")
CALCULATED VERT. DEFL.(LL) = L/ 999 (0.01")
ALLOWABLE DEFL.(TL)= L/360 (0.41")
CALCULATED VERT. DEFL.(TL) = L/ 999 (0.09")

CSI: TC=0.26/1.00 (B-C:1) , BC=0.21/1.00 (G-H:4) , WB=0.08/1.00 (C-G:1) , SSI=0.11/1.00 (B-C:1)

DOL LUMBER=1.00 NAIL=1.00 LS BEND=1.10 COMP=1.10 SHEAR=1.10 TENS= 1.10

COMPANION LIVE LOAD FACTOR = 1.00

TRUSS PLATE MANUFACTURER IS NOT RESPONSIBLE FOR QUALITY CONTROL IN THE TRUSS MANUFACTURING PLANT .

NAIL VALUES

PLATE	GRIP(DRY) (PSI) MAX	MIN	SHEAR (PLI) MAX	MIN	SECTION (PLI) MAX	MIN
MT20	618	354	1667	788	1987	1656

PLATE PLACEMENT TOL. = 0.250 inches

PLATE ROTATION TOL. = 5.0 Deg.

JSI GRIP= 0.78 (H) (INPUT = 0.90)
JSI METAL= 0.30 (F) (INPUT = 1.00)

A-18023067

JOB NAME	TRUSS NAME	QUANTITY	PLY	JOB DESC.	DRWG NO.
292566	H19G	1	1	TRUSS DESC.	

Alpa Roof Truss, Maple

Version 8.200 S Jan 6 2018 MiTek Industries, Inc. Thu Feb 15 08:17:54 2018 Page 1
ID:84gOFYESM8s1JmDO6_uSGRyQWjP-yf_rPwvnk7KpT6xZJaHqlMI8aQuAmd_qXaPKwDzkz3x

Scale = 1:27.9

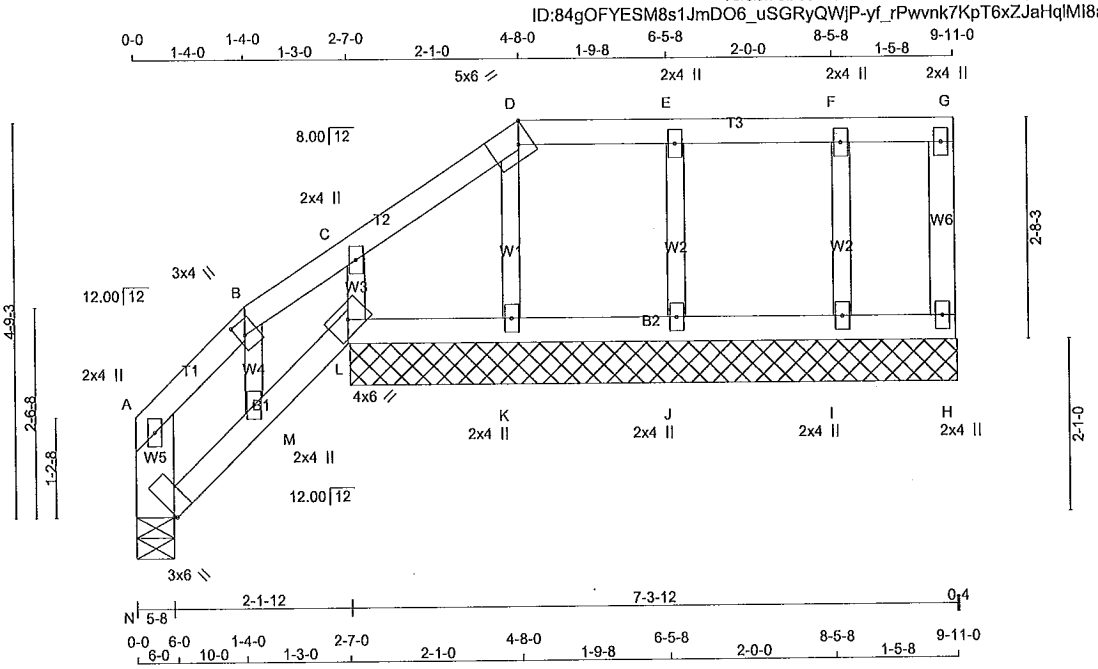

TOTAL WEIGHT = 37 lb

[M]

LUMBER

N. L. G. A. RULES

CHORDS	SIZE		LUMBER	DESCR.
N - A	2x6	DRY	No.2	SPF
A - B	2x4	DRY	No.2	SPF
B - D	2x4	DRY	No.2	SPF
D - G	2x4	DRY	No.2	SPF
H - G	2x4	DRY	No.2	SPF
N - L	2x4	DRY	No.2	SPF
L - H	2x4	DRY	No.2	SPF
ALL WEBS	2x3	DRY	No.2	SPF

DRY: SEASONED LUMBER.

GABLE STUDS SPACED AT 2-0-0 OC.

PLATES (table is in inches)

JT	TYPE	PLATES	W	LEN	Y	X
A	TMV+p	MT20	2.0	4.0		
B	TTW+m	MT20	3.0	4.0	2.00	1.00
C, E, F						
C	TMW+w	MT20	2.0	4.0		
D	TTW-h	MT20	5.0	6.0	Edge 2.00	
G	TMV+p	MT20	2.0	4.0		
H	BMV1+p	MT20	2.0	4.0		
I, J, K						
I	BMW1+w	MT20	2.0	4.0		
L	BBW1-h	MT20	4.0	6.0		
M	BMW+w	MT20	2.0	4.0		
N	BVM1+l	MT20	3.0	6.0	Edge 0.25	

Edge - INDICATES REFERENCE CORNER OF PLATE TOUCHES EDGE OF CHORD.

NOTE: Lateral brace(s) shown shall be 1x4 for Part 9 design as per OBC 9.23.13.11, and no less than 2x4 for Part 4 design

REGISTERED PROFESSIONAL ENGINEER
02/15/2018
EDWIN C. FOK
PROVINCE OF ONTARIO

DIMENSIONS, SUPPORTS AND LOADINGS SPECIFIED BY FABRICATOR TO BE VERIFIED BY BUILDING DESIGNER

BEARINGS

THIS TRUSS DESIGNED FOR CONTINUOUS BEARINGS.

THIS TRUSS REQUIRES RIGID SHEATHING ON EXPOSED FACE.

BEARING MATERIAL TO BE SPF NO.2 OR BETTER AT JOINT(S)

BRACING

TOP CHORD TO BE SHEATHED OR MAX. PURLIN SPACING = 6.25 FT.
MAX. UNBRACED BOTTOM CHORD LENGTH = 10.00 FT OR RIGID CEILING DIRECTLY APPLIED.

ALL PITCH BREAKS AND PERIMETER CORNER JOINTS MUST BE LATERALLY RESTRAINED.

LOADING

TOTAL LOAD CASES: (4)

CHORDS

MEMB. FR-TO	MAX. FACTORED FORCE (LBS)	FACTORED VERT. LOAD LC1 (PLF) FROM	TO	MAX CSI (LC)	MAX. UNBRAC LENGTH
N- A	-79 / 0	0.0	0.0	0.01 (1)	7.81
A- B	-29 / 0	-78.0	-78.0	0.03 (1)	6.25
B- C	0 / 14	-78.0	-78.0	0.05 (1)	10.00
C- D	-15 / 0	-78.0	-78.0	0.05 (1)	6.25
D- E	-15 / 0	-78.0	-78.0	0.04 (1)	6.25
E- F	-15 / 0	-78.0	-78.0	0.04 (1)	6.25
F- G	-15 / 0	-78.0	-78.0	0.03 (1)	6.25
H- G	-54 / 0	0.0	0.0	0.03 (1)	7.81
N- M	0 / 2	-18.5	-18.5	0.04 (1)	10.00
M- L	0 / 43	-18.5	-18.5	0.04 (1)	10.00
L- K	0 / 9	-18.5	-18.5	0.04 (1)	10.00
K- J	0 / 15	-18.5	-18.5	0.02 (4)	10.00
J- I	0 / 15	-18.5	-18.5	0.02 (4)	10.00
I- H	0 / 15	-18.5	-18.5	0.03 (1)	10.00

WEBS

MEMB. FR-TO	MAX. FACTORED FORCE (LBS)	MAX CSI (LC)
M- B	-43 / 0	0.01 (1)
K- D	-139 / 0	0.02 (1)
L- C	-175 / 0	0.02 (1)
J- E	-159 / 0	0.03 (1)
I- F	-124 / 0	0.02 (1)

DESIGN CRITERIA

SPECIFIED LOADS:

TOP CH.	LL	=	21.0	PSF
	DL	=	6.0	PSF
BOT CH.	LL	=	0.0	PSF
	DL	=	7.4	PSF
TOTAL LOAD		=	34.4	PSF

SPACING = 24.0 IN. C/C

LOADING IN FLAT SECTION BASED ON A SLOPE OF 2.00/12 MINIMUM

THIS TRUSS IS DESIGNED FOR RESIDENTIAL OR SMALL BUILDING REQUIREMENTS OF PART 9, NBCC 2010, NBCC 2015

THIS DESIGN COMPLIES WITH:
- PART 9 OF OBC 2012, OBC 2018
- CSA 086-09, CSA 086-14
- TPIC 2011, TPIC 2014

(55 % OF 23.0 P.S.F. G.S.L. PLUS 8.4 P.S.F. RAIN LOAD) EQUALS 21.0 P.S.F. SPECIFIED ROOF LIVE LOAD

ALLOWABLE DEFL.(LL)= L/360 (0.19")
CALCULATED VERT. DEFL.(LL) = L/ 999 (0.00")
ALLOWABLE DEFL.(TL)= L/360 (0.19")
CALCULATED VERT. DEFL.(TL) = L/ 999 (0.00")

CSI: TC=0.05/1.00 (B-C:1) , BC=0.04/1.00 (L-M:1) , WB=0.03/1.00 (E-J:1) , SSI=0.06/1.00 (E-F:1)

DOL LUMBER=1.00 NAIL=1.00 LS BEND=1.10 COMP=1.10 SHEAR=1.10 TENS= 1.10

COMPANION LIVE LOAD FACTOR = 1.00

TRUSS PLATE MANUFACTURER IS NOT RESPONSIBLE FOR QUALITY CONTROL IN THE TRUSS MANUFACTURING PLANT .

NAIL VALUES

PLATE	GRIP(DRY) (PSI) MAX	MIN	SHEAR (PLI) MAX	MIN	SECTION (PLI) MAX	MIN
MT20	618	354	1667	788	1987	1656

PLATE PLACEMENT TOL. = 0.250 Inches

PLATE ROTATION TOL. = 5.0 Deg.

JSI GRIP= 0.24 (L) (INPUT = 0.90)
JSI METAL= 0.09 (C) (INPUT = 1.00)

A-18023068

JOB NAME	TRUSS NAME	QUANTITY	PLY	JOB DESC.	DRWG NO.
292566	H20T	1	1	TRUSS DESC.	

Alpa Roof Truss, Maple

Version 8.200 S Jan 6 2018 MiTek Industries, Inc. Thu Feb 15 08:18:02 2018 Page 1
ID:84gOFYESM8s1JmDO6_uSGRyQWjP-jCTs5f?orbLhRLZ5nGQl42dQ9eZTe4t?NqLlDlzkz3p

Scale = 1:44.5

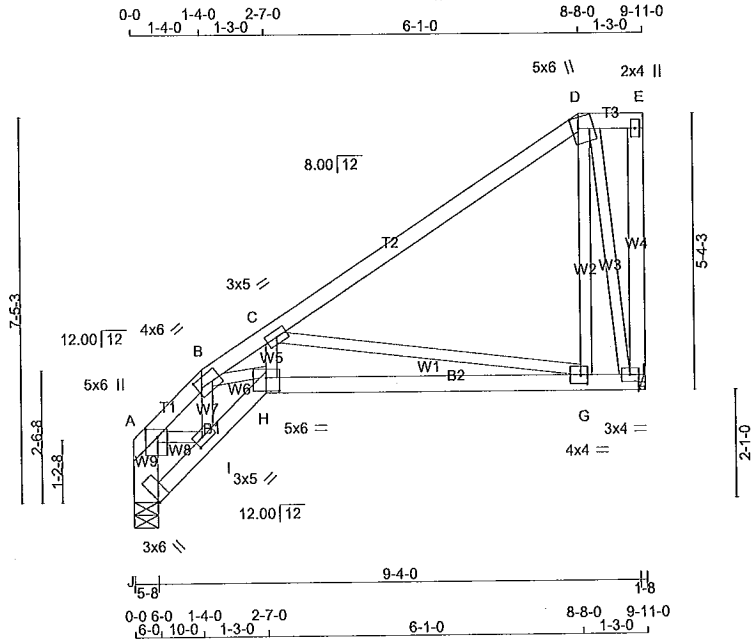

TOTAL WEIGHT = 50 lb

[M][F]

LUMBER
N. L. G. A. RULES

CHORDS	SIZE		LUMBER	DESCR.
A - B	2x4	DRY	No.2	SPF
B - D	2x4	DRY	No.2	SPF
D - E	2x4	DRY	No.2	SPF
F - E	2x4	DRY	No.2	SPF
J - A	2x6	DRY	No.2	SPF
J - H	2x4	DRY	No.2	SPF
H - F	2x4	DRY	No.2	SPF
ALL WEBS EXCEPT	2x3	DRY	No.2	SPF

DRY: SEASONED LUMBER.

PLATES (table is in inches)

JT	TYPE	PLATES	W	LEN	Y	X
A	TMVW+p	MT20	5.0	6.0	1.75	2.75
B	TTWW-m	MT20	4.0	6.0	2.00	1.00
C	TMWW-t	MT20	3.0	5.0		
D	TTWW+m	MT20	5.0	6.0	2.50	1.50
E	TMV+p	MT20	2.0	4.0		
F	BMVW1-t	MT20	3.0	4.0		
G	BMWW-t	MT20	4.0	4.0	2.00	1.50
H	BBWW-l	MT20	5.0	6.0	3.00	3.00
I	BMWW-t	MT20	3.0	5.0	1.50	2.00
J	BVM1+l	MT20	3.0	6.0	Edge	0.25

Edge - INDICATES REFERENCE CORNER OF PLATE TOUCHES EDGE OF CHORD.

NOTE: Lateral brace(s) shown shall be 1x4 for Part 9 design as per OBC 9.23.13.11, and no less than 2x4 for Part 4 design

REGISTERED PROFESSIONAL ENGINEER
02/15/2018
EDWIN C. FOK
PROVINCE OF ONTARIO

DIMENSIONS, SUPPORTS AND LOADINGS SPECIFIED BY FABRICATOR TO BE VERIFIED BY BUILDING DESIGNER

BEARINGS

JT	FACTORED GROSS REACTION VERT	HORZ	MAXIMUM FACTORED GROSS REACTION DOWN	HORZ	UPLIFT	INPUT BRG	REQRD BRG
F	478	0	478	0	0	IN-SX	IN-SX
						HANGER BY OTHERS	
						MIN. SEAT SIZE: 1-8	
J	478	0	478	0	0	5-8	1-8

UNFACTORED REACTIONS

MAX./MIN. COMPONENT REACTIONS

JT	1ST LCASE COMBINED	SNOW	LIVE	PERM.LIVE	WIND	DEAD	SOIL
F	341	208 / 0	0 / 0	0 / 0	0 / 0	133 / 0	0 / 0
J	341	208 / 0	0 / 0	0 / 0	0 / 0	133 / 0	0 / 0

BEARING MATERIAL TO BE SPF NO.2 OR BETTER AT JOINT(S) J
BEARING SIZE FACTOR = 1.15 AT JNT(S) J (BASED ON SUPPORT DEPTH = 1-8)

BRACING
TOP CHORD TO BE SHEATHED OR MAX. PURLIN SPACING = 5.27 FT.
MAX. UNBRACED BOTTOM CHORD LENGTH = 10.00 FT OR RIGID CEILING DIRECTLY APPLIED.

ALL PITCH BREAKS AND PERIMETER CORNER JOINTS MUST BE LATERALLY RESTRAINED.

LOADING
TOTAL LOAD CASES: (4)

CHORDS

MEMB. FR-TO	MAX. FACTORED FORCE (LBS)	FACTORED VERT. LOAD LC1 (PLF) FROM	TO	MAX CSI (LC)	MAX. UNBRAC LENGTH
A- B	-640 / 0	-78.0	-78.0	0.02 (1)	6.25
B- C	-1354 / 0	-78.0	-78.0	0.27 (1)	5.27
C- D	-156 / 0	-78.0	-78.0	0.33 (1)	6.25
D- E	0 / 0	-78.0	-78.0	0.02 (1)	10.00
F- E	-49 / 0	0.0	0.0	0.02 (1)	7.81
J- A	-463 / 0	0.0	0.0	0.03 (1)	7.81
J- I	-1 / 0	-18.5	-18.5	0.01 (4)	10.00
I- H	0 / 588	-18.5	-18.5	0.10 (1)	10.00
H- G	0 / 1160	-18.5	-18.5	0.27 (1)	10.00
G- F	0 / 117	-18.5	-18.5	0.17 (4)	10.00

WEBS

MEMB. FR-TO	MAX. FACTORED FORCE (LBS)	MAX CSI (LC)
H- C	0 / 420	0.09 (1)
C- G	-1064 / 0	0.74 (1)
G- D	0 / 307	0.07 (4)
D- F	-489 / 0	0.21 (1)
I- B	-347 / 0	0.05 (1)
A- I	0 / 452	0.10 (1)
B- H	0 / 785	0.18 (1)

DESIGN CRITERIA

SPECIFIED LOADS:

TOP CH.	LL	=	21.0	PSF
	DL	=	6.0	PSF
BOT CH.	LL	=	0.0	PSF
	DL	=	7.4	PSF
TOTAL LOAD		=	34.4	PSF

SPACING = 24.0 IN. C/C

LOADING IN FLAT SECTION BASED ON A SLOPE OF 2.00/12 MINIMUM

THIS TRUSS IS DESIGNED FOR RESIDENTIAL OR SMALL BUILDING REQUIREMENTS OF PART 9, NBCC 2010, NBCC 2015

THIS DESIGN COMPLIES WITH:
- PART 9 OF OBC 2012, OBC 2018
- CSA 086-09, CSA 086-14
- TPIC 2011, TPIC 2014

(55 % OF 23.0 P.S.F. G.S.L. PLUS 8.4 P.S.F. RAIN LOAD) EQUALS 21.0 P.S.F. SPECIFIED ROOF LIVE LOAD

ALLOWABLE DEFL.(LL)= L/360 (0.33")
CALCULATED VERT. DEFL.(LL) = L/ 999 (0.03")
ALLOWABLE DEFL.(TL)= L/360 (0.33")
CALCULATED VERT. DEFL.(TL) = L/ 999 (0.08")

CSI: TC=0.33/1.00 (C-D:1) , BC=0.27/1.00 (G-H:1) , WB=0.74/1.00 (C-G:1) , SSI=0.18/1.00 (C-D:1)

DOL LUMBER=1.00 NAIL=1.00 LS BEND=1.10 COMP=1.10 SHEAR=1.10 TENS= 1.10

COMPANION LIVE LOAD FACTOR = 1.00

AUTOSOLVE RIGHT HEEL ONLY

TRUSS PLATE MANUFACTURER IS NOT RESPONSIBLE FOR QUALITY CONTROL IN THE TRUSS MANUFACTURING PLANT .

NAIL VALUES

PLATE	GRIP(DRY) (PSI) MAX	MIN	SHEAR (PLI) MAX	MIN	SECTION (PLI) MAX	MIN
MT20	618	354	1667	788	1987	1656

PLATE PLACEMENT TOL. = 0.250 inches

PLATE ROTATION TOL. = 5.0 Deg.

JSI GRIP= 0.83 (B) (INPUT = 0.90)
JSI METAL= 0.39 (G) (INPUT = 1.00)

A-18023069

JOB NAME	TRUSS NAME	QUANTITY	PLY	JOB DESC.	DRWG NO.
292566	H25	4	1	TRUSS DESC.	

Alpa Roof Truss, Maple

Version 8.200 S Jan 6 2018 MiTek Industries, Inc. Thu Feb 15 08:18:45 2018 Page 1
ID:84gOFYESM8s1JmDO6_uSGRyQWjP-zTZ66MWnjoIa5yLMoohnJ7vnc_F?Dd3KG0GWEmzkz38

Scale = 1:41.3

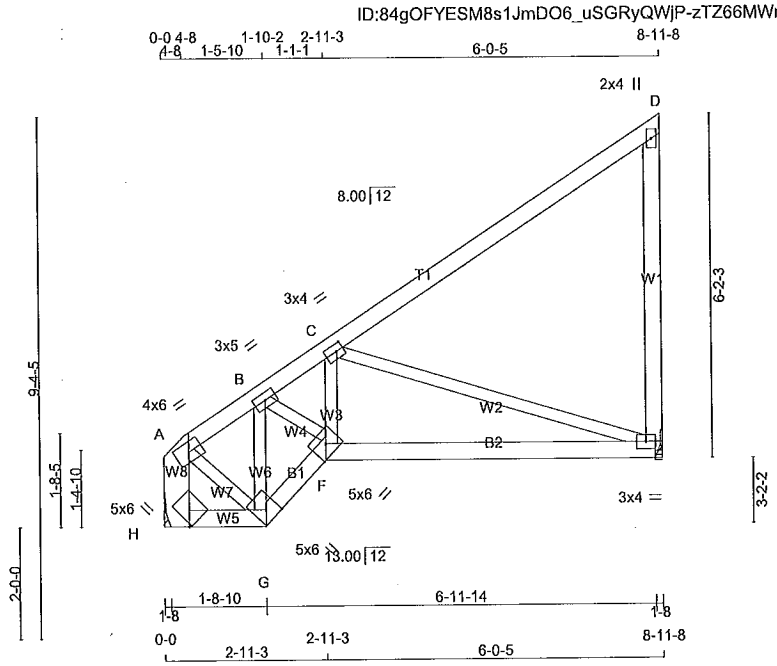

TOTAL WEIGHT = 4 X 42 = 167 lb

[M]

LUMBER

N. L. G. A. RULES

CHORDS	SIZE		LUMBER	DESCR.
H - A	2x6	DRY	No.2	SPF
A - D	2x4	DRY	No.2	SPF
E - D	2x4	DRY	No.2	SPF
G - F	2x4	DRY	No.2	SPF
F - E	2x4	DRY	No.2	SPF
ALL WEBS	2x3	DRY	No.2	SPF
EXCEPT				
H - G	2x4	DRY	No.2	SPF

DRY: SEASONED LUMBER.

PLATES (table is in inches)

JT	TYPE	PLATES	W	LEN	Y	X
A	TVMW-l	MT20	4.0	6.0		
B	TMWW-t	MT20	3.0	5.0		
C	TMWW-t	MT20	3.0	4.0	1.50	1.50
D	TMV+p	MT20	2.0	4.0		
E	BMVW1-t	MT20	3.0	4.0		
F	BBWW-h	MT20	5.0	6.0	Edge	
G	BWWW*+m	MT20	5.0	6.0	Edge	
H	VMW1*+m	MT20	5.0	6.0	0.25	0.50

Edge - INDICATES REFERENCE CORNER OF PLATE TOUCHES EDGE OF CHORD.

NOTE: Lateral brace(s) shown shall be 1x4 for Part 9 design as per OBC 9.23.13.11, and no less than 2x4 for Part 4 design

REGISTERED PROFESSIONAL ENGINEER
02/15/2018
EDWIN C. FOK
PROVINCE OF ONTARIO

DIMENSIONS, SUPPORTS AND LOADINGS SPECIFIED BY FABRICATOR TO BE VERIFIED BY BUILDING DESIGNER

BEARINGS

JT	FACTORED GROSS REACTION VERT	HORZ	MAXIMUM FACTORED GROSS REACTION DOWN	HORZ	UPLIFT	INPUT BRG IN-SX	REQRD BRG IN-SX
H	412	0	412	0	0	HANGER BY OTHERS MIN. SEAT SIZE: 1-8	
E	418	0	418	0	0	HANGER BY OTHERS MIN. SEAT SIZE: 1-8	

UNFACTORED REACTIONS

JT	1ST LCASE COMBINED	MAX./MIN. COMPONENT REACTIONS SNOW	LIVE	PERM.LIVE	WIND	DEAD	SOIL
H	291	193 / 0	0 / 0	0 / 0	0 / 0	98 / 0	0 / 0
E	298	183 / 0	0 / 0	0 / 0	0 / 0	115 / 0	0 / 0

BRACING

TOP CHORD TO BE SHEATHED OR MAX. PURLIN SPACING = 6.25 FT.
MAX. UNBRACED BOTTOM CHORD LENGTH = 10.00 FT OR RIGID CEILING DIRECTLY APPLIED.

ALL PITCH BREAKS AND PERIMETER CORNER JOINTS MUST BE LATERALLY RESTRAINED.

LOADING

TOTAL LOAD CASES: (4)

CHORDS

MEMB. FR-TO	MAX. FACTORED FORCE (LBS)	FACTORED VERT. LOAD (PLF) FROM	TO	LC1 MAX CSI (LC)	MAX. UNBRAC LENGTH
H- A	-420 / 0	0.0	0.0	0.03 (1)	7.81
A- B	-277 / 0	-78.0	-78.0	0.08 (1)	6.25
B- C	-536 / 0	-78.0	-78.0	0.38 (1)	6.25
C- D	-26 / 0	-78.0	-78.0	0.37 (1)	6.25
E- D	-185 / 0	0.0	0.0	0.13 (1)	7.81
G- F	0 / 295	-18.5	-18.5	0.05 (1)	10.00
F- E	0 / 561	-18.5	-18.5	0.24 (4)	10.00

WEBS

MEMB. FR-TO	MAX. FACTORED FORCE (LBS)	MAX CSI (LC)
F- C	-20 / 60	0.02 (4)
C- E	-589 / 0	0.38 (1)
H- G	-88 / 0	0.01 (1)
G- B	-380 / 0	0.06 (1)
A- G	0 / 351	0.08 (1)
B- F	0 / 472	0.11 (1)

DESIGN CRITERIA

SPECIFIED LOADS:

TOP CH.	LL	=	21.0	PSF
	DL	=	6.0	PSF
BOT CH.	LL	=	0.0	PSF
	DL	=	7.4	PSF
TOTAL LOAD		=	34.4	PSF

SPACING = 24.0 IN. C/C

THIS TRUSS IS DESIGNED FOR RESIDENTIAL OR SMALL BUILDING REQUIREMENTS OF PART 9, NBCC 2010, NBCC 2015

THIS DESIGN COMPLIES WITH:
- PART 9 OF OBC 2012, OBC 2018
- CSA 086-09, CSA 086-14
- TPIC 2011, TPIC 2014

(55 % OF 23.0 P.S.F. G.S.L. PLUS 8.4 P.S.F. RAIN LOAD) EQUALS 21.0 P.S.F. SPECIFIED ROOF LIVE LOAD

ALLOWABLE DEFL.(LL)= L/360 (0.29")
CALCULATED VERT. DEFL.(LL) = L/ 999 (0.01")
ALLOWABLE DEFL.(TL)= L/360 (0.29")
CALCULATED VERT. DEFL.(TL) = L/ 999 (0.07")

CSI: TC=0.38/1.00 (B-C:1) , BC=0.24/1.00 (E-F:4) , WB=0.38/1.00 (C-E:1) , SSI=0.19/1.00 (B-C:1)

DOL LUMBER=1.00 NAIL=1.00 LS BEND=1.10 COMP=1.10 SHEAR=1.10 TENS= 1.10

COMPANION LIVE LOAD FACTOR = 1.00

TRUSS PLATE MANUFACTURER IS NOT RESPONSIBLE FOR QUALITY CONTROL IN THE TRUSS MANUFACTURING PLANT .

NAIL VALUES

PLATE	GRIP(DRY) (PSI) MAX	MIN	SHEAR (PLI) MAX	MIN	SECTION (PLI) MAX	MIN
MT20	618	354	1667	788	1987	1656

PLATE PLACEMENT TOL. = 0.250 Inches

PLATE ROTATION TOL. = 5.0 Deg.

JSI GRIP= 0.89 (F) (INPUT = 0.90)
JSI METAL= 0.21 (E) (INPUT = 1.00)

A-18023070

JOB NAME	TRUSS NAME	QUANTITY	PLY	JOB DESC.	DRWG NO.
292566	H25A	1	1	TRUSS DESC.	

Alpa Roof Truss, Maple

Version 8.200 S Jan 6 2018 MiTek Industries, Inc. Thu Feb 15 08:19:12 2018 Page 1
ID:84gOFYESM8s1JmDO6_uSGRyQWjP-gfiKnbrjM59lq6vYtzg6vpXQbsU52t5lTjlSghzkz2j

Scale = 1:37.5

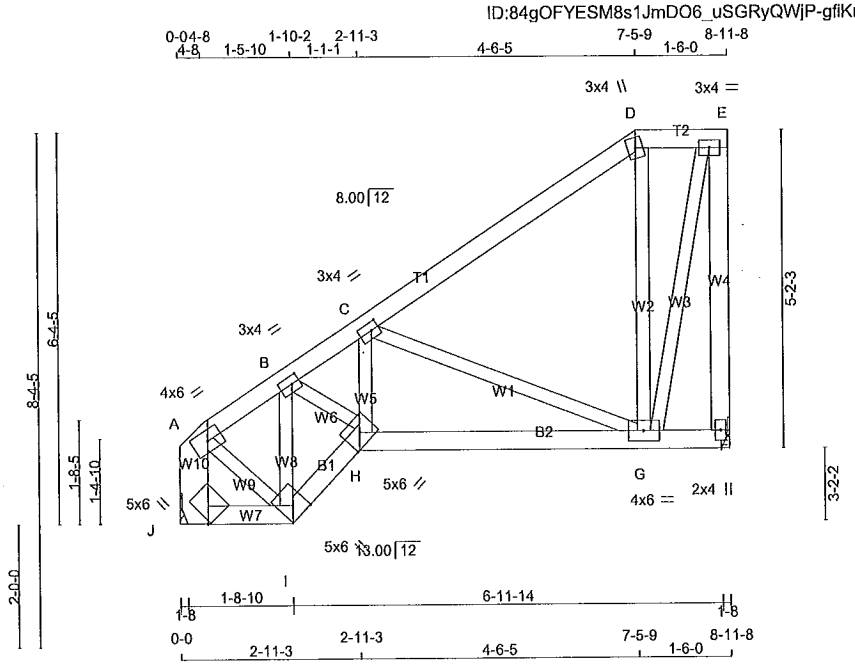

TOTAL WEIGHT = 47 lb

[M]

LUMBER
N. L. G. A. RULES

CHORDS	SIZE		LUMBER	DESCR.
J - A	2x6	DRY	No.2	SPF
A - D	2x4	DRY	No.2	SPF
D - E	2x4	DRY	No.2	SPF
F - E	2x4	DRY	No.2	SPF
I - H	2x4	DRY	No.2	SPF
H - F	2x4	DRY	No.2	SPF
ALL WEBS	2x3	DRY	No.2	SPF
EXCEPT				
J - I	2x4	DRY	No.2	SPF

DRY: SEASONED LUMBER.

PLATES (table is in inches)

JT	TYPE	PLATES	W	LEN	Y	X
A	TVMW-I	MT20	4.0	6.0		
B	TMWW-t	MT20	3.0	4.0	1.50	1.50
C	TMWW-t	MT20	3.0	4.0	1.50	1.50
D	TTW+m	MT20	3.0	4.0		
E	TMVW-t	MT20	3.0	4.0		
F	BMV1+p	MT20	2.0	4.0		
G	BMWWW-t	MT20	4.0	6.0		
H	BBWW-h	MT20	5.0	6.0	Edge	
I	BWWW*+m	MT20	5.0	6.0	Edge	
J	VMW1*+m	MT20	5.0	6.0	0.25	0.50

Edge - INDICATES REFERENCE CORNER OF PLATE TOUCHES EDGE OF CHORD.

NOTE: Lateral brace(s) shown shall be 1x4 for Part 9 design as per OBC 9.23.13.11, and no less than 2x4 for Part 4 design

REGISTERED PROFESSIONAL ENGINEER
02/15/2018
EDWIN C. FOK
PROVINCE OF ONTARIO

DIMENSIONS, SUPPORTS AND LOADINGS SPECIFIED BY FABRICATOR TO BE VERIFIED BY BUILDING DESIGNER

BEARINGS

JT	FACTORED GROSS REACTION VERT	HORZ	MAXIMUM FACTORED GROSS REACTION DOWN	HORZ	UPLIFT	INPUT BRG IN-SX	REQRD BRG IN-SX
J	412	0	412	0	0	HANGER BY OTHERS MIN. SEAT SIZE: 1-8	
F	418	0	418	0	0	HANGER BY OTHERS MIN. SEAT SIZE: 1-8	

UNFACTORED REACTIONS

JT	1ST LCASE COMBINED	MAX./MIN. COMPONENT REACTIONS SNOW	LIVE	PERM.LIVE	WIND	DEAD	SOIL
J	291	193 / 0	0 / 0	0 / 0	0 / 0	98 / 0	0 / 0
F	298	183 / 0	0 / 0	0 / 0	0 / 0	115 / 0	0 / 0

BRACING
TOP CHORD TO BE SHEATHED OR MAX. PURLIN SPACING = 6.25 FT.
MAX. UNBRACED BOTTOM CHORD LENGTH = 10.00 FT OR RIGID CEILING DIRECTLY APPLIED.

ALL PITCH BREAKS AND PERIMETER CORNER JOINTS MUST BE LATERALLY RESTRAINED.

LOADING
TOTAL LOAD CASES: (4)

CHORDS

MEMB. FR-TO	MAX. FACTORED FORCE (LBS)	FACTORED VERT. LOAD LC1 (PLF) FROM	TO	MAX CSI (LC)	MAX. UNBRAC LENGTH
J- A	-420 / 0	0.0	0.0	0.03 (1)	7.81
A- B	-283 / 0	-78.0	-78.0	0.05 (1)	6.25
B- C	-525 / 0	-78.0	-78.0	0.20 (1)	6.25
C- D	-148 / 0	-78.0	-78.0	0.20 (1)	6.25
D- E	-105 / 0	-78.0	-78.0	0.03 (1)	6.25
F- E	-426 / 0	0.0	0.0	0.20 (1)	7.81
I- H	0 / 312	-18.5	-18.5	0.05 (1)	10.00
H- G	0 / 492	-18.5	-18.5	0.13 (1)	10.00
G- F	0 / 0	-18.5	-18.5	0.08 (4)	10.00

WEBS

MEMB. FR-TO	MAX. FACTORED FORCE (LBS)	MAX CSI (LC)
H- C	0 / 54	0.02 (4)
C- G	-417 / 0	0.17 (1)
G- D	-128 / 0	0.05 (1)
G- E	0 / 383	0.09 (1)
J- I	-88 / 0	0.01 (1)
I- B	-400 / 0	0.06 (1)
A- I	0 / 365	0.08 (1)
B- H	0 / 370	0.08 (1)

DESIGN CRITERIA

SPECIFIED LOADS:

TOP CH.	LL	=	21.0	PSF
	DL	=	6.0	PSF
BOT CH.	LL	=	0.0	PSF
	DL	=	7.4	PSF
TOTAL LOAD		=	34.4	PSF

SPACING = 24.0 IN. C/C

LOADING IN FLAT SECTION BASED ON A SLOPE OF 2.00/12 MINIMUM

THIS TRUSS IS DESIGNED FOR RESIDENTIAL OR SMALL BUILDING REQUIREMENTS OF PART 9, NBCC 2010, NBCC 2015

THIS DESIGN COMPLIES WITH:
- PART 9 OF OBC 2012, OBC 2018
- CSA 086-09, CSA 086-14
- TPIC 2011, TPIC 2014

(55 % OF 23.0 P.S.F. G.S.L. PLUS 8.4 P.S.F. RAIN LOAD) EQUALS 21.0 P.S.F. SPECIFIED ROOF LIVE LOAD

ALLOWABLE DEFL.(LL)= L/360 (0.29")
CALCULATED VERT. DEFL.(LL) = L/ 999 (0.01")
ALLOWABLE DEFL.(TL)= L/360 (0.29")
CALCULATED VERT. DEFL.(TL) = L/ 999 (0.03")

CSI: TC=0.20/1.00 (B-C:1) , BC=0.13/1.00 (G-H:1) , WB=0.17/1.00 (C-G:1) , SSI=0.13/1.00 (C-D:1)

DOL LUMBER=1.00 NAIL=1.00 LS BEND=1.10 COMP=1.10 SHEAR=1.10 TENS= 1.10

COMPANION LIVE LOAD FACTOR = 1.00

TRUSS PLATE MANUFACTURER IS NOT RESPONSIBLE FOR QUALITY CONTROL IN THE TRUSS MANUFACTURING PLANT .

NAIL VALUES

PLATE	GRIP(DRY) (PSI) MAX	MIN	SHEAR (PLI) MAX	MIN	SECTION (PLI) MAX	MIN
MT20	618	354	1667	788	1987	1656

PLATE PLACEMENT TOL. = 0.250 inches

PLATE ROTATION TOL. = 5.0 Deg.

JSI GRIP= 0.82 (E) (INPUT = 0.90)
JSI METAL= 0.17 (A) (INPUT = 1.00)

A-18023071

JOB NAME	TRUSS NAME	QUANTITY	PLY	JOB DESC.	DRWG NO.
292567	H10T	6	1	TRUSS DESC.	

Alpa Roof Truss, Maple

Version 8.200 S Jan 6 2018 MiTek Industries, Inc. Thu Feb 15 08:35:59 2018 Page 1

ID:84gOFYESM8s1JmDO6_uSGRyQWjP-hO207w1NCV1s8sO5NyEGDAkWhn6oUBdX1ukEXqzkyp_

Scale = 1:57.9

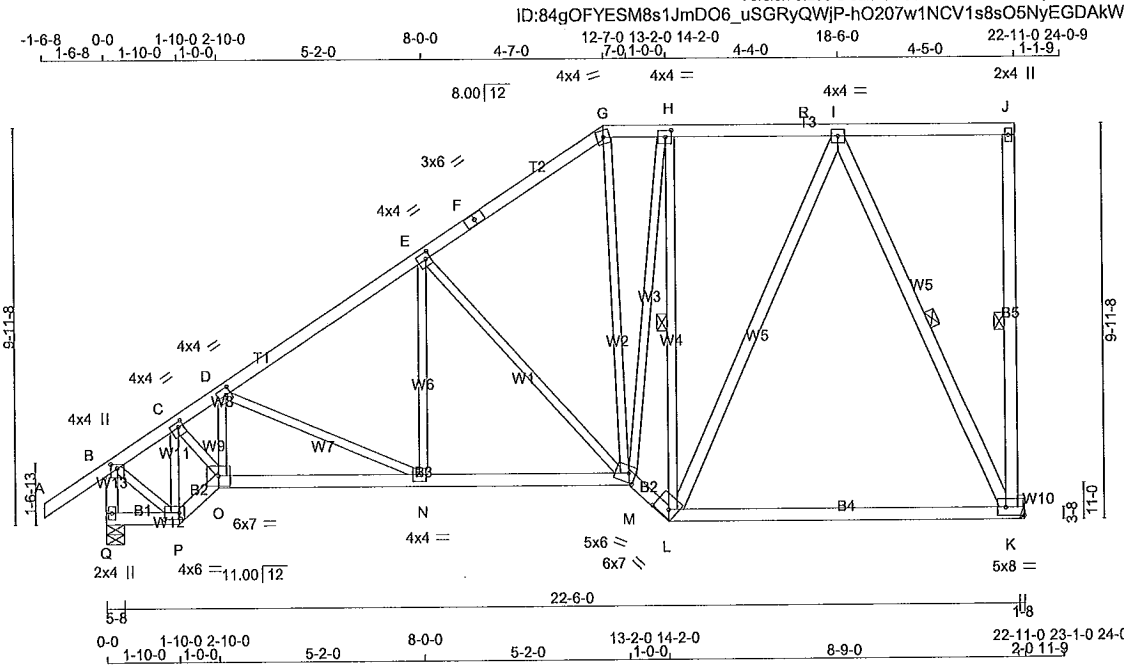

TOTAL WEIGHT = 6 X 137 = 821 lb

[M][F]

LUMBER

N. L. G. A. RULES

CHORDS	SIZE		LUMBER	DESCR.
Q - B	2x4	DRY	No.2	SPF
A - F	2x4	DRY	No.2	SPF
F - G	2x4	DRY	No.2	SPF
G - J	2x4	DRY	No.2	SPF
Q - P	2x4	DRY	No.2	SPF
P - O	2x4	DRY	No.2	SPF
O - M	2x4	DRY	No.2	SPF
M - L	2x4	DRY	No.2	SPF
L - K	2x4	DRY	No.2	SPF
K - J	2x4	DRY	No.2	SPF
ALL WEBS	2x3	DRY	No.2	SPF
EXCEPT				
L - I	2x4	DRY	No.2	SPF
I - K	2x4	DRY	No.2	SPF

DRY: SEASONED LUMBER.

PLATES (table is in inches)

JT	TYPE	PLATES	W	LEN	Y	X
B	TMVW+p	MT20	4.0	4.0	1.25	2.00
C	TMWW-t	MT20	4.0	4.0	1.50	1.50
D	TMWW-t	MT20	4.0	4.0	2.00	1.50
E	TMWW-t	MT20	4.0	4.0	2.00	1.50
F	TS-t	MT20	3.0	6.0		
G	TTW-m	MT20	4.0	4.0		
H	TMWW-t	MT20	4.0	4.0	2.00	1.75
I	TMWW-t	MT20	4.0	4.0		
J	TMV+p	MT20	2.0	4.0		
K	BMVWW1-t	MT20	5.0	8.0	2.50	Edge
L	BBWW-h	MT20	6.0	7.0	2.25	4.50
M	BBWWW-m	MT20	5.0	6.0	2.75	2.00
N	BMWW-t	MT20	4.0	4.0		
O	BBWW-l	MT20	6.0	7.0		
P	BBWW-l	MT20	4.0	6.0	2.00	4.50
Q	BMV1+p	MT20	2.0	4.0		

Edge - INDICATES REFERENCE CORNER OF PLATE TOUCHES EDGE OF CHORD.

NOTE: Lateral brace(s) shown shall be 1x4 for Part 9 design as per OBC 9.23.13.11, and no less than 2x4 for Part 4 design

REGISTERED PROFESSIONAL ENGINEER
02/15/2018
EDWIN C. FOK
PROVINCE OF ONTARIO

DIMENSIONS, SUPPORTS AND LOADINGS SPECIFIED BY FABRICATOR TO BE VERIFIED BY BUILDING DESIGNER

BEARINGS

JT	FACTORED GROSS REACTION VERT	HORZ	MAXIMUM FACTORED GROSS REACTION DOWN	HORZ	UPLIFT	INPUT BRG IN-SX	REQRD BRG IN-SX
Q	1246	0	1246	0	0	5-8	1-14
K	1153	0	1153	0	0	HANGER BY OTHERS	
						MIN. SEAT SIZE: 1-8	

UNFACTORED REACTIONS

JT	1ST LCASE COMBINED	MAX./MIN. COMPONENT REACTIONS SNOW	LIVE	PERM.LIVE	WIND	DEAD	SOIL
Q	887	548 / 0	0 / 0	0 / 0	0 / 0	339 / 0	0 / 0
K	827	476 / 0	0 / 0	0 / 0	0 / 0	352 / 0	0 / 0

BEARING MATERIAL TO BE SPF NO.2 OR BETTER AT JOINT(S) Q

BRACING

FOR SECTION G-J, MAX. PURLIN SPACING = 2.00 FT.
FOR OTHER SECTIONS, TOP CHORD TO BE SHEATHED OR MAX. PURLIN SPACING = 5.31 FT.
MAX. UNBRACED BOTTOM CHORD LENGTH = 6.25 FT OR RIGID CEILING DIRECTLY APPLIED.

ALL PITCH BREAKS AND PERIMETER CORNER JOINTS MUST BE LATERALLY RESTRAINED.

1 LATERAL BRACE(S) AT 1/ 2 LENGTH OF H-L, I-K.

END VERTICAL(S) MUST BE SHEATHED OR HAVE BRACES AS INDICATED IN THE MAX. UNBRACED LENGTH COLUMN OF THE TABLE BELOW

LOADING

TOTAL LOAD CASES: (4)

CHORDS

MEMB. FR-TO	MAX. FACTORED FORCE (LBS)	FACTORED VERT. LOAD (PLF) FROM	TO	LC1 MAX CSI (LC)	MAX. UNBRAC LENGTH
Q- B	-1229 / 0	0.0	0.0	0.13 (1)	7.23
A- B	0 / 35	-78.0	-78.0	0.15 (1)	10.00
B- C	-903 / 0	-78.0	-78.0	0.12 (1)	6.25
C- D	-1446 / 0	-78.0	-78.0	0.14 (1)	5.31
D- E	-1268 / 0	-78.0	-78.0	0.23 (1)	5.48
E- F	-866 / 0	-78.0	-78.0	0.21 (1)	6.25
F- G	-866 / 0	-78.0	-78.0	0.21 (1)	6.25
G- H	-720 / 0	-85.5	-85.5	0.07 (1)	2.00
H- R	-639 / 0	-85.5	-85.5	0.19 (1)	2.00
R- I	-639 / 0	-85.5	-85.5	0.19 (1)	2.00
I- J	0 / 0	-85.5	-85.5	0.25 (1)	10.00
Q- P	0 / 0	-18.5	-18.5	0.02 (4)	10.00
P- O	0 / 900	-18.5	-18.5	0.15 (1)	10.00
O- N	0 / 1272	-18.5	-18.5	0.28 (1)	10.00
N- M	0 / 1062	-18.5	-18.5	0.24 (4)	10.00
M- L	0 / 852	-18.5	-18.5	0.14 (1)	10.00
L- K	0 / 413	-18.5	-18.5	0.44 (4)	10.00
K- J	-140 / 0	0.0	0.0	0.07 (1)	6.25

WEBS

MEMB. FR-TO	MAX. FACTORED FORCE (LBS)	MAX CSI (LC)
B- P	0 / 852	0.19 (1)
P- C	-1055 / 0	0.18 (1)
C- O	0 / 998	0.22 (1)
O- D	-135 / 0	0.02 (1)
D- N	-231 / 0	0.12 (1)
N- E	0 / 199	0.06 (4)
E- M	-535 / 0	0.62 (1)
M- H	0 / 735	0.17 (1)
L- H	-987 / 0	0.66 (1)
G- M	0 / 294	0.07 (1)
L- I	0 / 550	0.09 (1)
I- K	-1022 / 0	0.61 (1)

DESIGN CRITERIA

SPECIFIED LOADS:

TOP CH.	LL	=	21.0	PSF
	DL	=	6.0	PSF
BOT CH.	LL	=	0.0	PSF
	DL	=	7.4	PSF
TOTAL LOAD		=	34.4	PSF

SPACING = 24.0 IN. C/C

LOADING IN FLAT SECTION BASED ON PIGGYBACK TRUSS WITH SLOPES OF 6.00/12 AND -6.00/12 AND RESPECTIVE WALL HEIGHTS OF 0-0 AND 0-0 AND AN ADDITIONAL DEAD LOAD OF 3.0 P.S.F.

THIS TRUSS IS DESIGNED FOR RESIDENTIAL OR SMALL BUILDING REQUIREMENTS OF PART 9, NBCC 2010, NBCC 2015

THIS DESIGN COMPLIES WITH:
- PART 9 OF OBC 2012, OBC 2018
- CSA 086-09, CSA 086-14
- TPIC 2011, TPIC 2014

DESIGN ASSUMPTIONS
-OVERHANG NOT TO BE ALTERED OR CUT OFF.

(55 % OF 23.0 P.S.F. G.S.L. PLUS 8.4 P.S.F. RAIN LOAD) EQUALS 21.0 P.S.F. SPECIFIED ROOF LIVE LOAD

ALLOWABLE DEFL.(LL)= L/360 (0.76")
CALCULATED VERT. DEFL.(LL) = L/ 999 (0.04")
ALLOWABLE DEFL.(TL)= L/360 (0.76")
CALCULATED VERT. DEFL.(TL) = L/ 989 (0.28")

CSI: TC=0.25/1.00 (I-J:1) , BC=0.44/1.00 (K-L:4) , WB=0.66/1.00 (H-L:1) , SSI=0.18/1.00 (I-J:1)

DOL LUMBER=1.00 NAIL=1.00 LS BEND=1.10 COMP=1.10 SHEAR=1.10 TENS= 1.10

COMPANION LIVE LOAD FACTOR = 1.00

TRUSS PLATE MANUFACTURER IS NOT RESPONSIBLE FOR QUALITY CONTROL IN THE TRUSS MANUFACTURING PLANT .

NAIL VALUES

PLATE	GRIP(DRY) (PSI) MAX	MIN	SHEAR (PLI) MAX	MIN	SECTION (PLI) MAX	MIN
MT20	618	354	1667	788	1987	1656

PLATE PLACEMENT TOL. = 0.250 Inches

PLATE ROTATION TOL. = 5.0 Deg.

JSI GRIP= 0.88 (M) (INPUT = 0.90)
JSI METAL= 0.29 (C) (INPUT = 1.00)

A-18023072

CONTINUED ON PAGE 2

STRACON ENGINEERING INC.

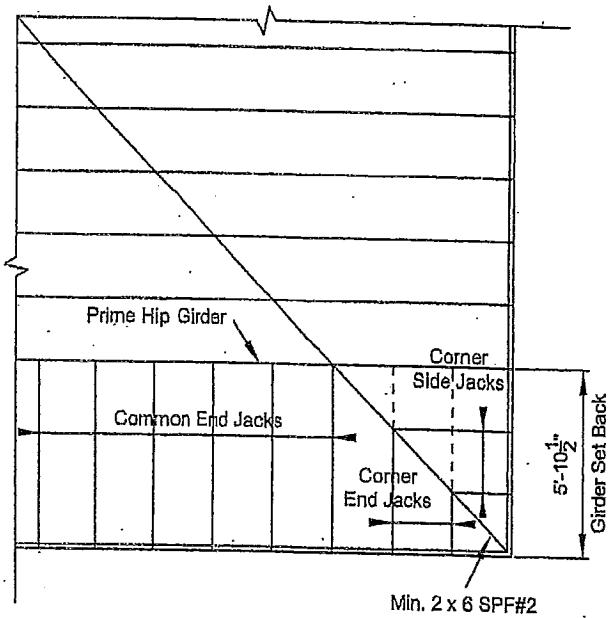

45° Hip End

LUMBER SPECIFICATION

TOP CHORD	:	2 x 4 SPF#2
BOTTOM CHORD	:	2 x 4 SPF#2
WEBS	:	2 x 3 SPF#2

UNLESS OTHERWISE SHOWN

DESIGN LOAD

TOP CHORD SNOW LOAD	:	40.5 P.S.F.
TOP CHORD DEAD LOAD	:	3.0 P.S.F.
BOTTOM CHORD LIVE LOAD	:	0.0 P.S.F.
BOTTOM CHORD DEAD LOAD	:	7.0 P.S.F.
TOTAL LOAD	:	50.5 P.S.F

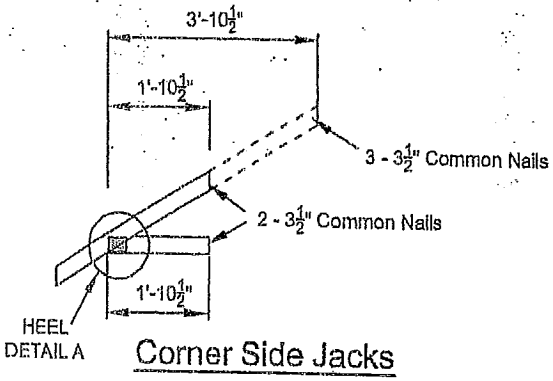

Corner Side Jacks

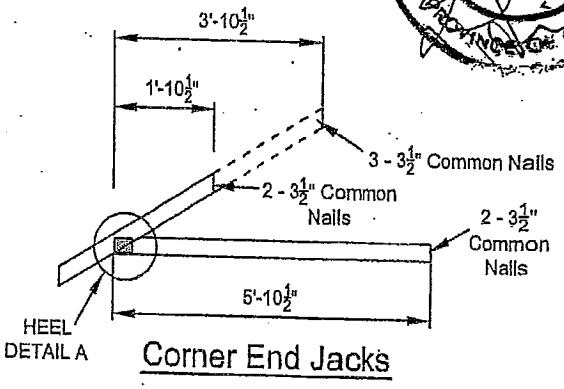

Corner End Jacks

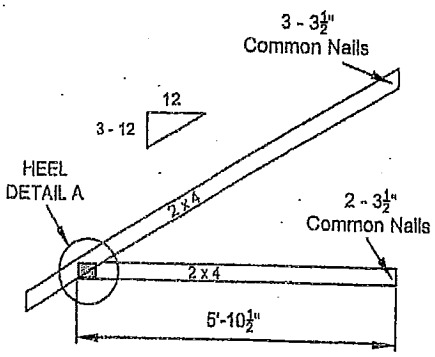

Common End Jacks

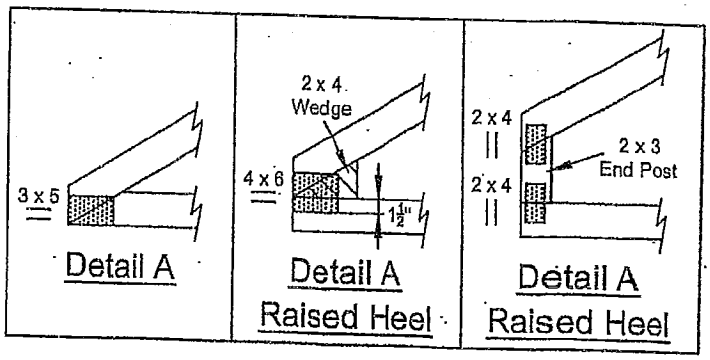

NOTE: DESIGN CONFORMS TO PART 9, O.B.C. 2012 (L.S.D. DESIGN)

CS-51008

HUS/LJS – Double Shear Joist Hangers

SIMPSON Strong-Tie®

All hangers have double shear nailing. This patented innovation distributes the load through two points on each joist nail for greater strength. It also allows the use of fewer nails, faster installation and the use of common nails for all connections. Do not bend or remove tabs.

Material: See table

Finish: G90 galvanized

Design:

- Factored resistances are in accordance with CSA O86 -14.
- Uplift resistances have been increased 15%. No further increase is permitted.
- Wood shear is not considered in the factored resistances given. The specifier must ensure that the joist and header capacities are capable of withstanding these loads.

Installation:

- Use all specified fasteners
- Nails: 16d = 0.162" dia. x 3½" long common wire
- Double shear nails must be driven at an angle through the joist or truss into the header to achieve the table loads
- Not designed for welded or nailer applications

Options:

- See current catalogue for options

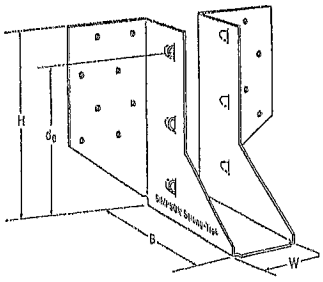

LJS26DS

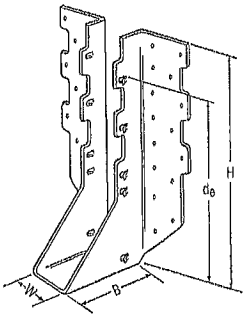

HUS210
(HUS26, HUS28, similar)

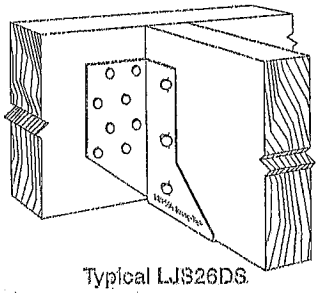

Typical LJS26DS Installation

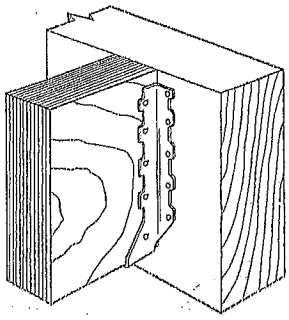

Typical HUS Installation

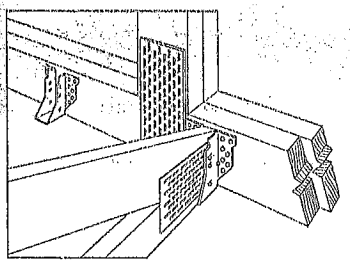

Typical HUS Installation
(Truss Designer to provide fastener quantity for connecting multiple members together)

Model No.	Ga.	Dimensions (in.)				Fasteners		Factored Resistance (lb.)			
								D.Fir-L		S-P-F	
		W	H	B	d_e[1]	Face	Joist	Uplift (K_D=1.15) lb.	Normal (K_D=1.00) lb.	Uplift (K_D=1.15) lb.	Normal (K_D=1.00) lb.
LJS26DS	18	1 9/16	5	3½	4⅝	(16) 16d	(6) 16d	2055	4265	1460	4115
HUS26	16	1⅝	5⅝	3	3 15/16	(14) 16d	(6) 16d	2705	4940	2065	3875
HUS28	16	1⅝	7 3/32	3	6 9/32	(22) 16d	(8) 16d	3605	5365	2675	4345
HUS210	16	1⅝	9 3/32	3	7 31/32	(30) 16d	(10) 16d	4505	5795	4010	4740
HUS1.81/10	16	1 13/16	9	3	8	(30) 16d	(10) 16d	4505	6450	4010	5200

1. d_e is the distance from the seat of the hanger to the highest joist nail.

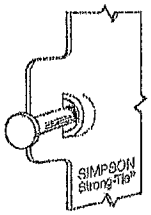

Dome Double Shear Nailing prevents tabs breaking off (available on some models).

U.S. Patent 5,603,580

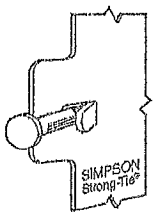

Double Shear Nailing Side View. Do not bend tab back.

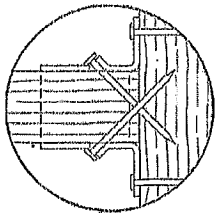

Double Shear Nailing Top View.

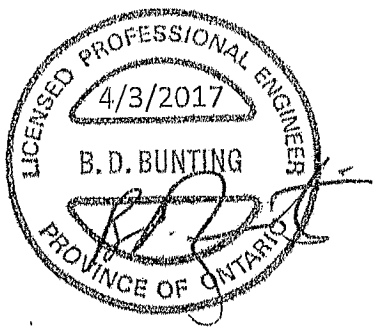

LIMIT STATES DESIGN

This technical bulletin is effective until June 30, 2019, and reflects information available as of March 1, 2017. This information is updated periodically and should not be relied upon after June 30, 2019. Contact Simpson Strong-Tie for current information and limited warranty or see strongtie.com.

© 2017 Simpson Strong-Tie Company Inc.

(800) 999-5099
stronglie.com

TECHNICAL BULLETIN

LUS – Double Shear Joist Hangers

SIMPSON Strong-Tie®

All LUS hangers have double shear nailing. This patented innovation distributes the load through two points on each joist nail for greater strength. It also allows the use of fewer nails, faster installation and the use of common nails for all connections.

Material: 18 gauge

Finish: G90 galvanized

Design:

- Factored resistances are in accordance with CSA O86-14.
- Uplift resistances have been increased 15%. No further increase is permitted.
- Wood shear is not considered in the factored resistances given. The specifier must ensure that the joist and header capacities are capable of withstanding these loads.

Installation:

- Use all specified fasteners.
- Nails: 16d = 0.162" dia. x 3½" long common wire, 10d = 0.148" x 3" long common wire.
- Double shear nails must be driven at an angle through the joist or truss into the header to achieve the table loads.
- Not designed for welded or nailer applications.

Options:

- These hangers cannot be modified

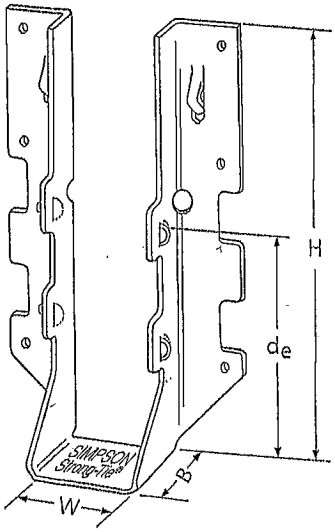

LUS28

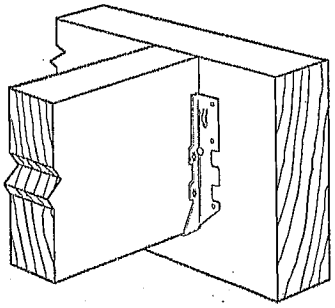

Typical LUS Installation

Model No.	Ga.	Dimensions (in.)				Fasteners		Factored Resistance (lb.)			
								D.Fir-L		S-P-F	
		W	H	B	d_e[1]	Face	Joist	Uplift (K_D=1.15)	Normal (K_D=1.00)	Uplift (K_D=1.15)	Normal (K_D=1.00)
LUS24	18	1 9/16	3 1/8	1 3/4	1 15/16	(4) 10d	(2) 10d	710	1630	645	1155
LUS24-2	18	3 1/8	3 1/8	2	1 13/16	(4) 16d	(2) 16d	835	2020	590	1435
LUS26	18	1 9/16	4 3/4	1 3/4	3 5/8	(4) 10d	(4) 10d	1420	2170	1290	1630
LUS26-2	18	3 1/8	4 7/8	2	4	(4) 16d	(4) 16d	1720	2595	1545	1920
LUS26-3	18	4 5/8	4 3/16	2	3 1/4	(4) 16d	(4) 16d	1720	2595	1545	2340
LUS28	18	1 9/16	6 5/8	1 3/4	3 3/4	(6) 10d	(6) 10d	1420	2520	1290	1790
LUS28-2	18	3 1/8	7	2	4	(6) 16d	(4) 16d	1720	3325	1545	2575
LUS28-3	18	4 5/8	6 1/4	2	3 1/4	(6) 16d	(4) 16d	1720	3325	1545	2375
LUS210	18	1 9/16	7 13/16	1 3/4	3 7/8	(8) 10d	(4) 10d	1420	2785	1290	2210
LUS210-2	18	3 1/8	9	2	6	(8) 16d	(6) 16d	2580	4500	2320	3195
LUS210-3	18	4 5/8	8 5/16	2	5 1/4	(8) 16d	(6) 16d	2580	3345	2320	2375

1. d_e is the distance from the seat of the hanger to the highest joist nail.

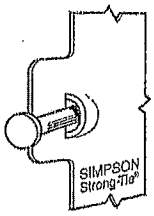

Dome Double Shear Nailing prevents tabs breaking off (available on some models).

U.S. Patent 5,603,580

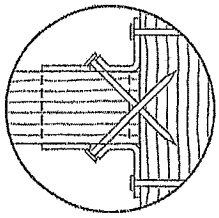

Double Shear Nailing Top View.

LICENSED PROFESSIONAL ENGINEER
4/5/2017
B. D. BUNTING
PROVINCE OF ONTARIO

LIMIT STATES DESIGN

This technical bulletin is effective until June 30, 2019, and reflects information available as of March 1, 2017.
This information is updated periodically and should not be relied upon after June 30, 2019.
Contact Simpson Strong-Tie for current information and limited warranty or see strongtie.com.

© 2017 Simpson Strong-Tie Company Inc.

T-SPECLUS17 3/17 exp. 6/19

(800) 999-5099
strongtie.com

TECHNICAL BULLETIN

HHUS – Double Shear Joist Hangers

SIMPSON Strong-Tie®

All HHUS hangers have double shear nailing. This patented innovation distributes the load through two points on each joist nail for greater strength. It also allows the use of fewer nails, faster installation and the use of common nails for all connections. Do not bend or remove tabs.

Material: 14 gauge

Finish: G90 galvanized

Design:

- Factored resistances are in accordance with CSA O86-14.
- Uplift resistances have been increased 15%. No further increase is permitted.
- Wood shear is not considered in the factored resistances given. The specifier must ensure that the joist and header capacities are capable of withstanding these loads.

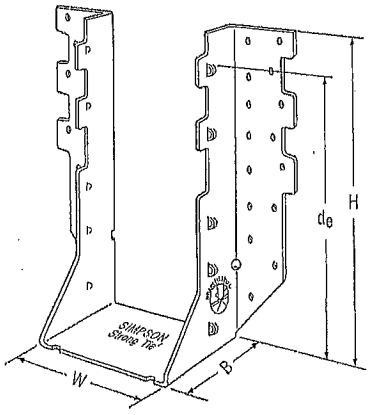

HHUS410

Installation:

- Use all specified fasteners
- Nails: 16d = 0.162" dia. x 3½" long common wire
- Double shear nails must be driven at an angle through the joist or truss into the header to achieve the table loads
- Not designed for welded or nailer applications

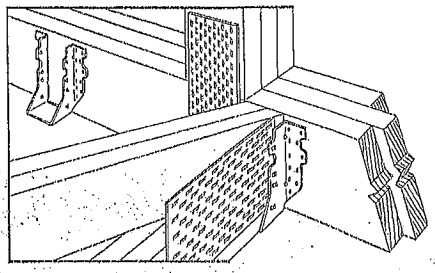

Typical HHUS Installation (Truss Designer to provide fastener quantity for connecting multiple members together)

Options:

- See current catalogue for options

Model No.	Ga.	Dimensions (in.)				Fasteners		Factored Resistance (lb.)			
								D.Fir-L		S-P-F	
		W	H	B	d_e[1]	Face	Joist	Uplift (K_D=1.15)	Normal (K_D=1.00)	Uplift (K_D=1.15)	Normal (K_D=1.00)
HHUS26-2	14	3 5/16	5 13/16	3	3 15/16	(14) 16d	(6) 16d	2850	7335	2065	5205
HHUS28-2	14	3 5/16	7 7/32	3	6 5/32	(22) 16d	(8) 16d	3765	8940	2675	6345
HHUS210-2	14	3 5/16	9 3/32	3	8	(30) 16d	(10) 16d	4745	9660	4310	7000
HHUS210-3	14	4 11/16	9	3	7 15/16	(30) 16d	(10) 16d	4745	10545	4310	7485
HHUS210-4	14	6 1/8	8 29/32	3	7 27/32	(30) 16d	(10) 16d	4745	10545	4310	7485
HHUS46	14	3 5/8	5 13/32	3	3 15/16	(14) 16d	(6) 16d	2540	7335	2065	5205
HHUS48	14	3 5/8	7 1/8	3	6 1/8	(22) 16d	(8) 16d	3765	8945	2267	6345
HHUS410	14	3 5/8	9	3	8	(30) 16d	(10) 16d	4745	9855	4310	7000
HHUS5.50/10	14	5 1/2	9	3	8	(30) 16d	(10) 16d	4745	10545	4310	7485
HHUS7.25/10	14	7 1/4	9	3 5/16	7 29/32	(30) 16d	(10) 16d	4745	10770	4310	7650

1. d_e is the distance from the seat of the hanger to the highest joist nail.

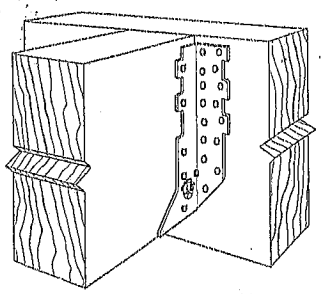

Typical HHUS Installation

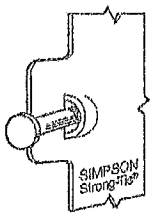

Dome Double Shear Nailing prevents tabs breaking off (available on some models).

U.S. Patent 5,603,580

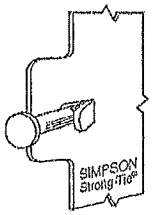

Double Shear Nailing Side View. Do not bend tab back.

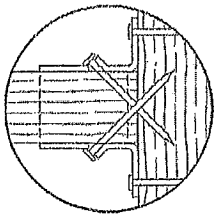

Double Shear Nailing Top View.

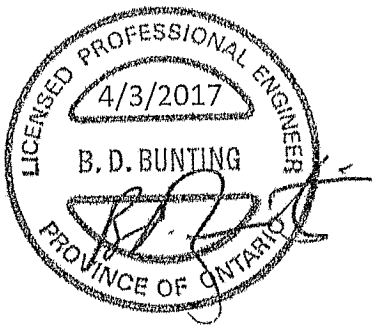

LIMIT STATES DESIGN

This technical bulletin is effective until June 30, 2019, and reflects information available as of March 1, 2017. This information is updated periodically and should not be relied upon after June 30, 2019. Contact Simpson Strong-Tie for current information and limited warranty or see strongtie.com.

© 2017 Simpson Strong-Tie Company Inc.

T-SPECHHUS17 3/17 exp. 6/19

(800) 999-5099
strongtie.com