ALL CONV. FRAMING TO CONFORM WITH PART 9 OF O.B.C. 2012
ROOF RAFTERS THAT CROSS MEET OVER TRUSSES TO BE 2X4 SPF #2 24"O.C. WITH A VERT.POST TO THE TRUSS UNDERNEATH AT EACH CROSS PT.
VERT. POST LONGER THAN 6' TO HAVE LATERAL BRACING SO THAT THE DIST. BETWEEN END PT. & BETWEEN ROWS OF BRACING DOES NOT EXCEED 6'

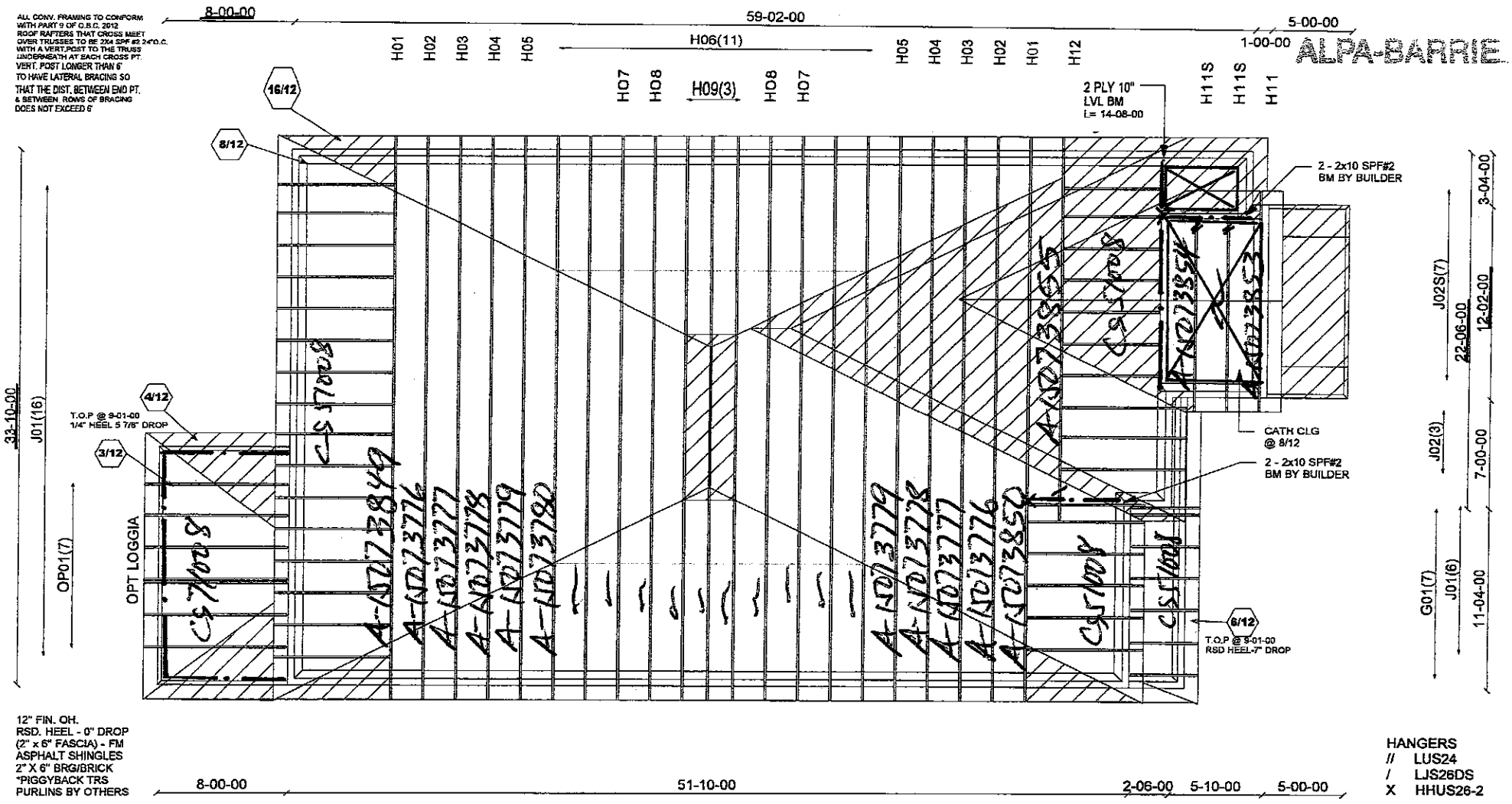

12" FIN. OH.
RSD. HEEL - 0" DROP
(2" x 6" FASCIA) - FM
ASPHALT SHINGLES
2" X 6" BRG/BRICK
*PIGGYBACK TRS
PURLINS BY OTHERS

HANGERS
// LUS24
/ LJS26DS
X HHUS26-2

Piggyback (A-15073781, A-15073851, A-15073852)

CONVENTIONAL FRAMING BY OTHERS

PL 80980

Mitek Ver: 7.5.0

Job Track: 40297	Builder / Location: GOLD PARK / KLEINBURG	Model / Elevation: 42-4 / A	STD OR OPT 2ND FLR
Layout ID: 253635	Project: HUNTINGTON & NASHVILLE	THESE DRAWINGS CONSTITUTE THE PROPERTY OF ALPA ROOF TRUSSES INC., SHALL NOT BE REPRODUCED, PUBLISHED, OR REDISTRIBUTED IN ANY MANNER OR UTILIZED FOR ANY PURPOSE OTHER THAN THE MANUFACTURE OF TRUSSES BY ALPA ROOF TRUSSES INC AND WILL BE RETRACTED BY ALPA ROOF TRUSSES INC IF UTLILZED FOR ANY OTHER PURPOSE.	
Plan Log: 79711	Date: 5/1/2015 Designer: cheryle		

ALL CONV. FRAMING TO CONFORM WITH PART 9 OF O.B.C. 2012
ROOF RAFTERS THAT CROSS MEET OVER TRUSSES TO BE 2X4 SPF #2 24"O.C WITH A VERT.POST TO THE TRUSS UNDERNEATH AT EACH CROSS PT.
VERT. POST LONGER THAN 6' TO HAVE LATERAL BRACING SO THAT THE DIST. BETWEEN END PT. & BETWEEN ROWS OF BRACING DOES NOT EXCEED 6'

ALPA-BARRIE

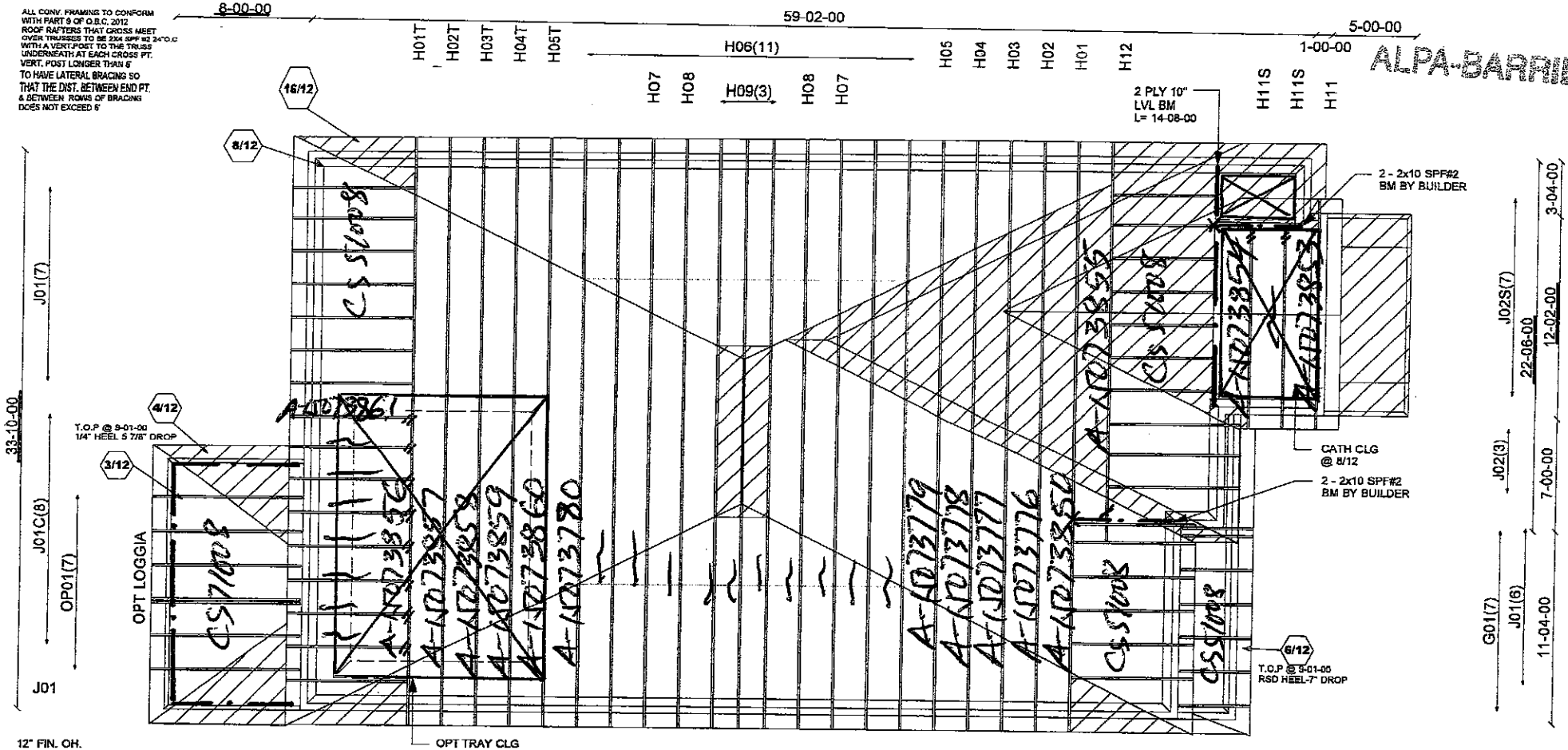

12" FIN. OH.
RSD. HEEL - 0" DROP
(2" x 5" FASCIA) - FM
ASPHALT SHINGLES
2" X 6" BRG/BRICK
*PIGGYBACK TRS
PURLINS BY OTHERS

HANGERS
// LUS24
/ LJS26DS
X HHUS26-2

Piggyback (A-1073781, A-1073851, A-1073852)

CONVENTIONAL FRAMING BY OTHERS

PL80980

Mitek Ver: 7.5.0

Job Track: 40297	Builder / Location: GOLD PARK / KLEINBURG	Model / Elevation: 42-4	/ A OPT TRAY
Layout ID: 253636	Project: HUNTINGTON & NASHVILLE	THESE DRAWINGS CONSTITUTE THE PROPERTY OF ALPA ROOF TRUSSES INC., SHALL NOT BE REPRODUCED, PUBLISHED, OR REDISTRIBUTED IN ANY MANNER OR UTILIZED FOR ANY PURPOSE OTHER THAN THE MANUFACTURE OF TRUSSES BY ALPA ROOF TRUSSES INC AND WILL BE RETRACTED BY ALPA ROOF TRUSSES INC IF UTLILZED FOR ANY OTHER PURPOSE.	
Plan Log: 79711	Date: 5/1/2015 Designer: cheryle		

ALL CONV. FRAMING TO CONFORM WITH PART 9 OF O.B.C. 2012
ROOF RAFTERS THAT CROSS MEET OVER TRUSSES TO BE 2X4 SPF #2 24"O.C. WITH A VERT.POST TO THE TRUSS UNDERNEATH AT EACH CROSS PT.
VERT. POST LONGER THAN 6' TO HAVE LATERAL BRACING SO THAT THE DIST. BETWEEN END PT. & BETWEEN ROWS OF BRACING DOES NOT EXCEED 6'

ALPA-BARRIE

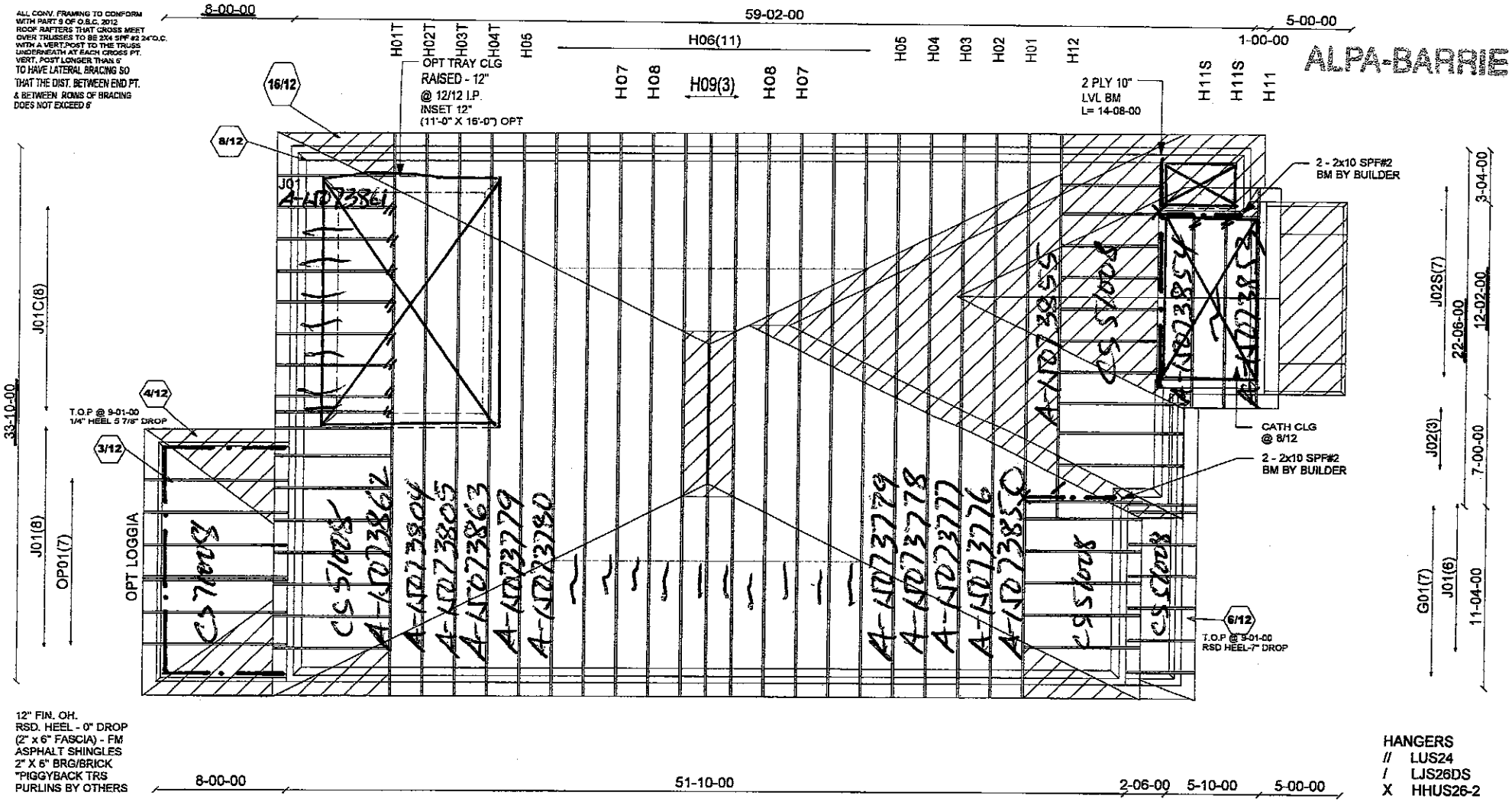

12" FIN. OH.
RSD. HEEL - 0" DROP
(2" x 6" FASCIA) - FM
ASPHALT SHINGLES
2" X 6" BRG/BRICK
"PIGGYBACK TRS
PURLINS BY OTHERS

HANGERS
// LUS24
/ LJS26DS
X HHUS26-2

Piggyback (A-15073781, A-15073851, A-15073852)

CONVENTIONAL FRAMING BY OTHERS

PL80980

Mitek Ver: 7.5.0

Job Track: 40297	Builder / Location: GOLD PARK / KLEINBURG	Model / Elevation: 42-4	/ A OPT 2ND W/TRAY
Layout ID: 253638	Project: HUNTINGTON & NASHVILLE	THESE DRAWINGS CONSTITUTE THE PROPERTY OF ALPA ROOF TRUSSES INC., SHALL NOT BE REPRODUCED, PUBLISHED, OR REDISTRIBUTED IN ANY MANNER OR UTILIZED FOR ANY PURPOSE OTHER THAN THE MANUFACTURE OF TRUSSES BY ALPA ROOF TRUSSES INC AND WILL BE RETRACTED BY ALPA ROOF TRUSSES INC IF UTLILZED FOR ANY OTHER PURPOSE.	
Plan Log: 79711	Date: 5/1/2015 Designer: cheryle		

ALL CONV. FRAMING TO CONFORM WITH PART 9 OF O.B.C. 2012
ROOF RAFTERS THAT CROSS MEET OVER TRUSSES TO BE 2X4 SPF #2 24"O.C. WITH A VERT.POST TO THE TRUSS UNDERNEATH AT EACH CROSS PT. VERT. POST LONGER THAN 6' TO HAVE LATERAL BRACING SO THAT THE DIST. BETWEEN END PT. & BETWEEN ROWS OF BRACING DOES NOT EXCEED 8'

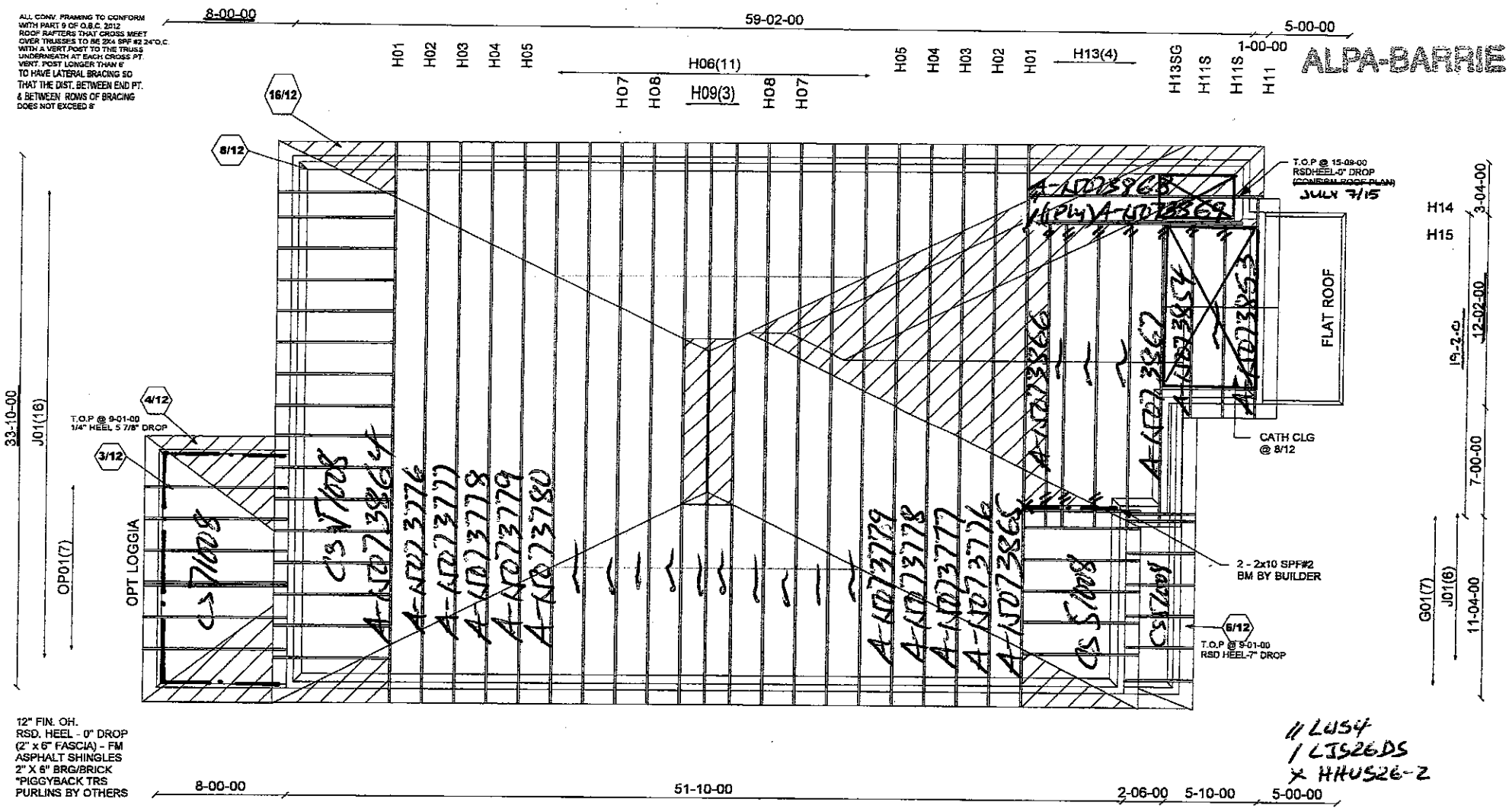

Piggyback (A-15073781, A-15073851, A-15073852, A-15073870)

CONVENTIONAL FRAMING BY OTHERS

Mitek Ver: 7.5.0

PL80980

Job Track: 40297	Builder / Location: GOLD PARK / KLEINBURG	Model / Elevation: 42-4 / B	STD OR OPT TRAY
Layout ID: 253639	Project: HUNTINGTON & NASHVILLE	THESE DRAWINGS CONSTITUTE THE PROPERTY OF ALPA ROOF TRUSSES INC., SHALL NOT BE REPRODUCED, PUBLISHED, OR REDISTRIBUTED IN ANY MANNER OR UTILIZED FOR ANY PURPOSE OTHER THAN THE MANUFACTURE OF TRUSSES BY ALPA ROOF TRUSSES INC AND WILL BE RETRACTED BY ALPA ROOF TRUSSES INC IF UTLILZED FOR ANY OTHER PURPOSE.	
Plan Log: 79711	Date: 5/1/2015 Designer: cheryle		

ALL CONV. FRAMING TO CONFORM WITH PART 9 OF O.B.C. 2012. ROOF RAFTERS THAT CROSS MEET OVER TRUSSES TO BE 2X4 SPF #2 24"O.C. WITH A VERT.POST TO THE TRUSS UNDERNEATH AT EACH CROSS PT. VERT. POST LONGER THAN 8' TO HAVE LATERAL BRACING SO THAT THE DIST. BETWEEN END PT. & BETWEEN ROWS OF BRACING DOES NOT EXCEED 8'

ALPA-BARRIE

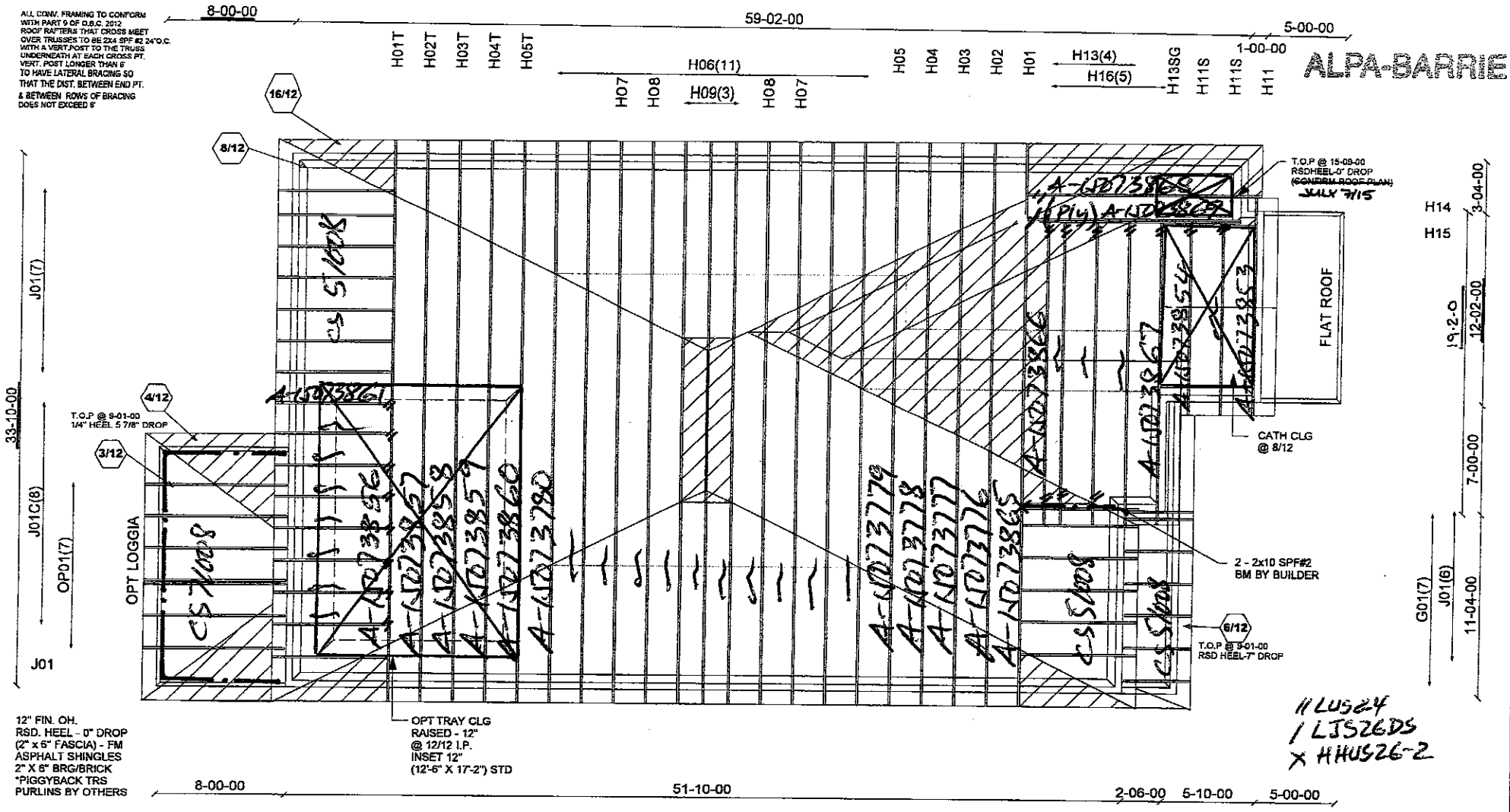
8-00-00
59-02-00
5-00-00
1-00-00
H01T
H02T
H03T
H04T
H05T
H06(11)
H07
H08
H09(3)
H08
H07
H05
H04
H03
H02
H01
H13(4)
H16(5)
H13SG
H11S
H11S
H11
16/12
8/12
4/12
3/12
6/12
T.O.P @ 15-09-00
RSDHEEL-0" DROP
(CONFIRM ROOF PLAN)
JULY 7/15
T.O.P @ 9-01-00
1/4" HEEL 5 7/8" DROP
T.O.P @ 9-01-00
RSD HEEL-7" DROP
FLAT ROOF
CATH CLG
@ 8/12
2 - 2x10 SPF#2
BM BY BUILDER
OPT LOGGIA
OPT TRAY CLG
RAISED - 12"
@ 12/12 I.P.
INSET 12"
(12'-6" X 17'-2") STD
J01(7)
J01C(8)
OP01(7)
J01
33-10-00
H14
H15
3-04-00
19-2-0
12-02-00
7-00-00
11-04-00
G01(7)
J01(6)
8-00-00
51-10-00
2-06-00
5-10-00
5-00-00
A-1507386S
(Ply) A-1507386P
A-1507386T
A-1507386U
A-1507386V
A-1507386W
A-1507386X
A-1507386Y
A-1507386Z
A-1507386A
A-1507386B
A-1507386C
A-1507386D
A-1507386E
A-1507386F
A-1507386G
A-1507386H
A-1507386J
A-1507386K
A-1507386L
A-1507386M
A-1507386N
A-1507386P
A-1507386Q
A-1507386R
A-1507386S

ALL CONV. FRAMING TO CONFORM WITH PART 9 OF O.B.C. 2012
ROOF RAFTERS THAT CROSS MEET OVER TRUSSES TO BE 2X4 SPF #2 24"O.C. WITH A VERT.POST TO THE TRUSS UNDERNEATH AT EACH CROSS PT.
VERT. POST LONGER THAN 6' TO HAVE LATERAL BRACING SO THAT THE DIST. BETWEEN END PT. & BETWEEN ROWS OF BRACING DOES NOT EXCEED 6'

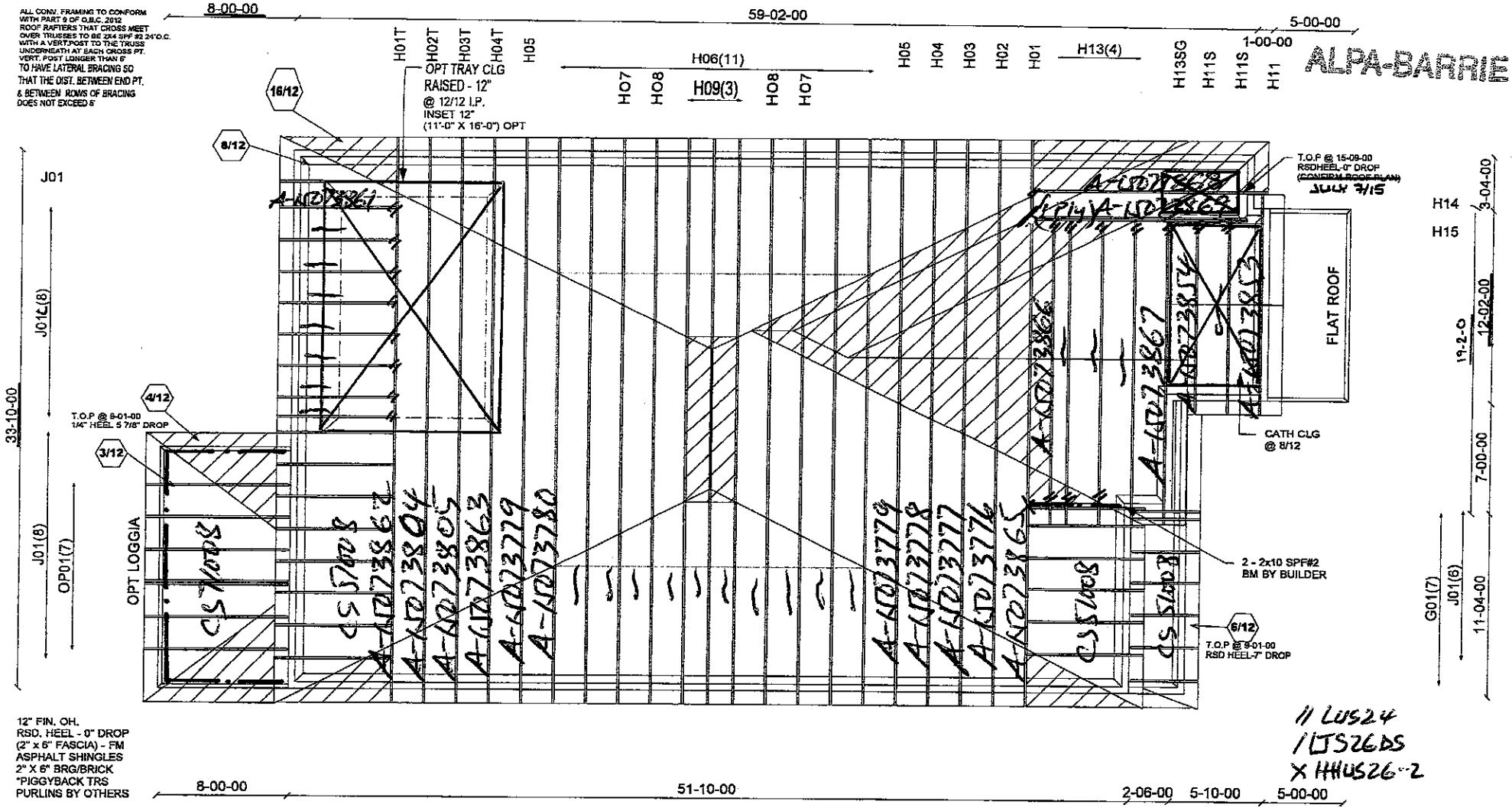

12" FIN. OH.
RSD. HEEL - 0" DROP
(2" x 6" FASCIA) - FM
ASPHALT SHINGLES
2" X 6" BRG/BRICK
"PIGGYBACK TRS
PURLINS BY OTHERS

11 LUS24
1 JS26DS
X HHUS26-2

Piggyback (A-15073781, A-15073851, A-15073852, A-15073870)

CONVENTIONAL FRAMING BY OTHERS

PL 80980

Mitek Ver: 7.5.0

Job Track: 40297	Builder / Location: GOLD PARK / KLEINBURG	Model / Elevation: 42-4	/ B OPT 2ND W/TRAY
Layout ID: 253640	Project: HUNTINGTON & NASHVILLE	THESE DRAWINGS CONSTITUTE THE PROPERTY OF ALPA ROOF TRUSSES INC., SHALL NOT BE REPRODUCED, PUBLISHED, OR REDISTRIBUTED IN ANY MANNER OR UTILIZED FOR ANY PURPOSE OTHER THAN THE MANUFACTURE OF TRUSSES BY ALPA ROOF TRUSSES INC AND WILL BE RETRACTED BY ALPA ROOF TRUSSES INC IF UTLILZED FOR ANY OTHER PURPOSE.	
Plan Log: 79711	Date: 5/1/2015 Designer: cheryle		

Stracon Engineering Inc.

69 Graydon Crescent
Richmond Hill, Ontario
L4B 3W7
(905) 832-2250 Fax (905) 832-0286

REGISTERED PROFESSIONAL ENGINEER
JAN 15
E. FOK
PROVINCE OF ONTARIO

RESPONSIBILITIES

1. Stracon Engineering Inc. is responsible for the design of trusses as individual components.
2. It is the responsibility of others to ascertain that the design loads utilized on this drawing meet or exceed the actual dead load imposed by the structure and the live load imposed by the local building code or the authorities with jurisdictions.
3. All dimensions are to be verified by owner contractor, architect or other authority before manufacture.
4. Stracon Engineering Inc. bears no responsibility for the erection of the trusses. Persons erecting trusses are cautioned to seek professional advice regarding temporary and permanent bracing system. Bracing shown on Stracon Engineering Inc. drawings is specified for the truss as a component only and forms an integral part of the truss design.
5. It is the truss manufacture's responsibility to ensure that trusses are manufactured in conformance with Stracon Engineering Inc. specifications outlined below.

SPECIFICATIONS

1. Trusses designed by Stracon Engineering Inc. conforms to the relevant section of the Ontario Building Code of Canada (Part 9 or Part 4) or to the Canadian code for farm buildings, whichever applies to the building type indicated on the drawings as well as to the procedures established by the truss plate institute of Canada. Unit stresses used are as per CSA-086-09.
2. Lumber is to be the sizes and grade specified.
3. Moisture content of lumber is not to exceed 19% in service unless otherwise specified.
4. Lumber not to be treated with chemicals unless otherwise specified.
5. Plates shall be applied to both faces of the truss at each joint and shall be positioned as specified.
6. The top chord is assumed to be continuously laterally braced by the roof sheathing or purlins at intervals not exceeding 12.5 times in thickness.
7. Where not rigid ceiling is attached directly to the bottom chord, laterally brace the chords at intervals not exceeding 3M (10') o.c.

January 15, 2014

JOB NUMBER	TRUSS NAME	QUANTITY	PLY	JOB DESC.	DRWG NO.
253617	H16	5	1	TRUSS DESC.	

Alpa Roof Truss, Maple

Version 7.820 S Apr 16 2015 MiTek Industries, Inc. Fri Jul 17 15:22:08 2015 Page 1
ID:AyrJx9Y?fa2EXF7DRQxSq4zMEz1-01IUIOxRaPhDGtpEENtQP1OhcBPCjxsPqvVEB8yx801
Scale = 1:15.4

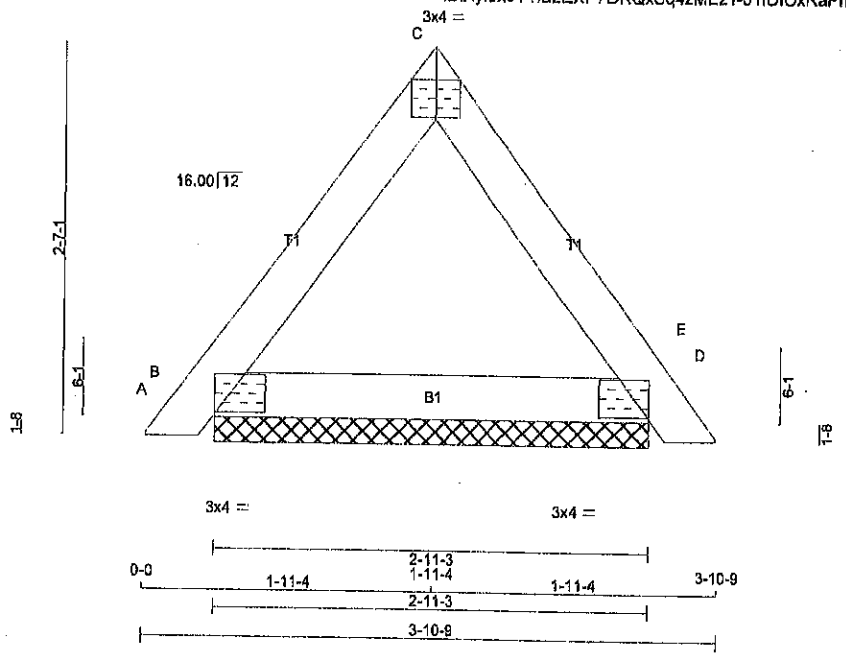

LUMBER
N. L. G. A. RULES

CHORDS	SIZE		LUMBER	DESCR.
A - C	2x4	DRY	No.2	SPF
C - E	2x4	DRY	No.2	SPF
B - D	2x4	DRY	No.2	SPF

DRY: SEASONED LUMBER.

PLATES (table is in inches)

JT	TYPE	PLATES	W	LEN	Y	X
B	TMB1-I	MT20	3.0	4.0	1.50	2.75
C	TT-p	MT20	3.0	4.0	3.25	Edge
D	TMB1-I	MT20	3.0	4.0	1.50	2.75

Edge - INDICATES REFERENCE CORNER OF PLATE TOUCHES EDGE OF CHORD.

NOTES- (1)
1) Lateral brace(s) shown shall be 1x4 for Part 9 design as per OBC 9.23.13.11, and no less than 2x4 for Part 4 design.

DIMENSIONS, SUPPORTS AND LOADINGS SPECIFIED BY FABRICATOR TO BE VERIFIED BY BUILDING DESIGNER

BEARINGS

JT	FACTORED GROSS REACTION VERT	HORZ	MAXIMUM FACTORED GROSS REACTION DOWN	HORZ	UPLIFT	INPUT BRG IN-SX	REQRD BRG IN-SX
B	154	0	154	0	0	2-11-3	1-8
D	154	0	164	0	0	2-11-3	1-8

UNFACTORED REACTIONS

JT	1ST LCASE COMBINED	MAX./MIN. COMPONENT REACTIONS SNOW	LIVE	PERM.LIVE	WIND	DEAD	SOIL
B	108	76 / 0	0 / 0	0 / 0	0 / 0	31 / 0	0 / 0
D	108	76 / 0	0 / 0	0 / 0	0 / 0	31 / 0	0 / 0

BEARING MATERIAL TO BE SPF NO.2 OR BETTER AT JOINT(S) B, D

BRACING
TOP CHORD TO BE SHEATHED OR MAX. PURLIN SPACING = 6.25FT.
MAX. UNBRACED BOTTOM CHORD LENGTH = 10.00FT. OR RIGID CEILING DIRECTLY APPLIED.

LOADING
TOTAL LOAD CASES: (4)

CHORDS

MEMB. FR-TO	MAX. FACTORED FORCE (LBS)	FACTORED VERT. LOAD (PLF) FROM	TO	LC1	MAX CSI (LC)	MAX UNBRAC LENGTH
A- B	0 / 9	-70.5	-70.5	0.01 (1)	10.00	
B- C	-63 / 0	-70.5	-70.5	0.03 (1)	6.25	
C- D	-63 / 0	-70.5	-70.5	0.03 (1)	6.25	
D- E	0 / 9	-70.5	-70.5	0.01 (1)	10.00	

WEBS

MEMB. FR-TO	MAX. FACTORED FORCE (LBS)	MAX CSI (LC)
B- D	0 / 37	-17.5 -17.5 0.05 (4) 10.00

TOTAL WEIGHT = 5 X 11 = 53 lb
[M]

DESIGN CRITERIA

SPECIFIED LOADS:

TOP CH.	LL	=	21.0	PSF
	DL	=	3.0	PSF
BOT CH.	LL	=	0.0	PSF
	DL	=	7.0	PSF
TOTAL LOAD		=	31.0	PSF

SPACING = 24.0 IN. C/C

THIS TRUSS IS DESIGNED FOR RESIDENTIAL OR SMALL BUILDING REQUIREMENTS OF PART 9, NBCC 2010

THIS DESIGN COMPLIES WITH:
- PART 9 OF OBC 2012 , BCBC 2012 , ABC 2014
- CSA 086-09
- TPIC 2011

(55 % OF 23.0 P.S.F. G.S.L. PLUS
8.4 P.S.F. RAIN LOAD EQUALS
21.0 P.S.F. SPECIFIED ROOF LIVE LOAD

CSI: TC=0.03 (C-D:1) , BC=0.05 (B-D:4) , WB=0.00 (n/a:0) , SSI=0.03 (B-D:4)

DOL LUMBER=1.00 NAIL=1.00 LS BEND=1.10 COMP=1.10 SHEAR=1.10 TENS= 1.10

COMPANION LIVE LOAD FACTOR = 0.60

TRUSS PLATE MANUFACTURER IS NOT RESPONSIBLE FOR QUALITY CONTROL IN THE TRUSS MANUFACTURING PLANT .

NAIL VALUES

PLATE	GRIP(DRY) (PSI) MAX	MIN	SHEAR (PLI) MAX	MIN	SECTION (PLI) MAX	MIN
MT20	618	354	1667	822	2284	1658

PLATE PLACEMENT TOL. = 0.250 Inches

PLATE ROTATION TOL. = 5.0 Deg.

JSI GRIP= 0.24 (D) (INPUT = 0.90)
JSI METAL= 0.04 (B) (INPUT = 1.00)

LICENSED PROFESSIONAL ENGINEER
07.17.2015
R. TURENNE
100157040
PROVINCE OF ONTARIO

A-N073870

253639	H15	1	1	TRUSS DESC.	DRWG NO.

Alpa Roof Truss, Maple

Version 7.620 S Apr 15 2015 MiTek Industries, Inc. Fri Jul 17 15:02:04 2015 Page 1
ID:AyrJx9Y?fa2EXF7DRQxSq4zMEz1-GPYKclMC6T?2prmrlVVH4c8WlCrFcdCXBzbsWwwyx8JI-
Scale = 1:40.4

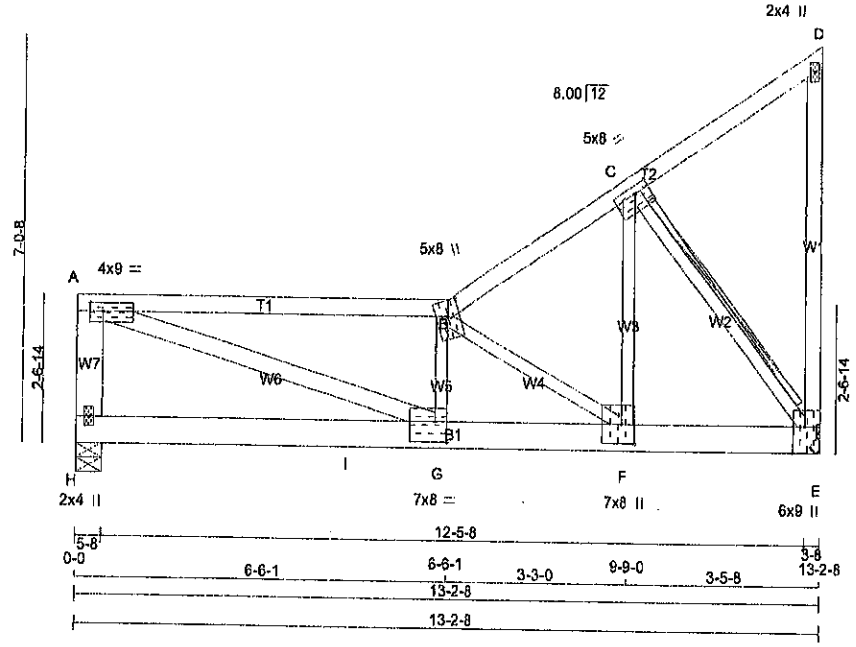

TOTAL WEIGHT = 70 lb
[M]

LUMBER
N. L. G. A. RULES

CHORDS	SIZE		LUMBER	DESCR.
H - A	2x6	DRY	No.2	SPF
A - B	2x4	DRY	1650F 1.5E	SPF
B - D	2x4	DRY	No.2	SPF
E - D	2x4	DRY	No.2	SPF
H - E	2x6	DRY	No.2	SPF
ALL WEBS EXCEPT	2x3	DRY	No.2	SPF
A - G	2x4	DRY	No.2	SPF

DRY: SEASONED LUMBER.

PLATES (table is in inches)

JT	TYPE	PLATES	W	LEN	Y	X
A	TMVW-t	MT20	4.0	9.0	1.75	2.75
B	TTWW+m	MT20	5.0	8.0	3.25	2.50
C	TMWW-t	MT20	5.0	8.0	1.50	3.25
D	TMV+p	MT20	2.0	4.0		
E	BMVW1+t	MT20	6.0	9.0	Edge	2.50
F	BMWW+t	MT20	7.0	8.0	4.00	2.75
G	BMWW-t	MT20	7.0	8.0	4.25	2.50
H	BMV1+p	MT20	2.0	4.0		

Edge - INDICATES REFERENCE CORNER OF PLATE TOUCHES EDGE OF CHORD.

NOTES- (1)
1) Lateral brace(s) shown shall be 1x4 for Part 9 design as per OBC 9.23.13.11, and no less than 2x4 for Part 4 design.

DIMENSIONS, SUPPORTS AND LOADINGS SPECIFIED BY FABRICATOR TO BE VERIFIED BY BUILDING DESIGNER

BEARINGS

JT	FACTORED GROSS REACTION VERT	HORZ	MAXIMUM FACTORED GROSS REACTION DOWN	HORZ	UPLIFT	INPUT BRG IN-SX	REQRD BRG IN-SX
H	2284	0	2284	0	0	5-8	2-8
E	2756	0	2756	0	0	HANGER BY OTHERS MIN. SEAT SIZE: 3-8	

UNFACTORED REACTIONS

JT	1ST LCASE COMBINED	MAX./MIN. COMPONENT REACTIONS SNOW	LIVE	PERM.LIVE	WIND	DEAD	SOIL
H	1609	1090 / 0	0 / 0	0 / 0	0 / 0	519 / 0	0 / 0
E	1942	1315 / 0	0 / 0	0 / 0	0 / 0	627 / 0	0 / 0

BEARING MATERIAL TO BE SPF NO.2 OR BETTER AT JOINT(S) H

BRACING
TOP CHORD TO BE SHEATHED OR MAX. PURLIN SPACING = 3.23FT.
MAX. UNBRACED BOTTOM CHORD LENGTH = 10.00FT. OR RIGID CEILING DIRECTLY APPLIED.

2x4 DRY SPF No.2 T-BRACE REQUIRED AT C-E
FASTEN T AND I-BRACES TO NARROW EDGE OF WEB WITH ONE ROW PER PLY OF 3" COMMON WIRE NAILS @ 6" O.C. WITH 3" MINIMUM END DISTANCE. BRACE MUST COVER 90% OF WEB LENGTH.
END VERTICAL(S) MUST BE SHEATHED OR HAVE BRACES AS INDICATED IN THE MAX. UNBRACED LENGTH COLUMN OF THE TABLE BELOW

LOADING
TOTAL LOAD CASES: (4)

CHORDS

MEMB. FR-TO	MAX. FACTORED FORCE (LBS)	FACTORED VERT. LOAD LC1 (PLF) FROM	TO	MAX CSI (LC)	MAX UNBRAC LENGTH
H- A	-1668 / 0	0.0	0.0	0.14 (1)	7.81
A- B	-4218 / 0	-70.5	-70.5	0.81 (1)	3.23
B- C	-1981 / 0	-70.5	-70.5	0.20 (1)	4.58
C- D	-15 / 0	-70.5	-70.5	0.14 (1)	6.25
E- D	-94 / 0	0.0	0.0	0.09 (1)	7.81
H- I	0 / 0	-213.6	-213.6	0.65 (1)	10.00
I- G	0 / 0	-367.5	-367.5	0.65 (1)	10.00
G- F	0 / 4204	-367.5	-367.5	1.00 (1)	10.00
F- E	0 / 1665	-367.5	-367.5	0.55 (1)	10.00

WEBS

MEMB. FR-TO	MAX. FACTORED FORCE (LBS)	MAX CSI (LC)
A- G	0 / 4459	0.79 (1)
G- B	0 / 281	0.07 (1)
B- F	-3060 / 0	0.85 (1)
F- C	0 / 2898	0.72 (1)
C- E	-2671 / 0	0.67 (1)

DESIGN CRITERIA

SPECIFIED LOADS:

TOP CH.	LL	=	21.0	PSF
	DL	=	3.0	PSF
BOT CH.	LL	=	0.0	PSF
	DL	=	7.0	PSF
TOTAL LOAD		=	31.0	PSF

SPACING = 24.0 IN. C/C

LOADING IN ALL FLAT SECTIONS BASED ON A SLOPE OF 2.00/12 MINIMUM

GIRDER TYPE: CStdGirder
START DISTANCE = 0-0
START SPAN CARRIED = 10-11-0
END DISTANCE = 4-10-0
END SPAN CARRIED = 10-11-0
END WALL WIDTH = 0-0
APPLIED TO FRONT SIDE OF BOTTOM CHORD.
- ADDT'L LOADS BASED ON 55 % OF GSL.

GIRDER TYPE: CStdGirder
START DISTANCE = 4-10-0
START SPAN CARRIED = 17-11-0
END DISTANCE = 13-2-8
END SPAN CARRIED = 17-11-0
END WALL WIDTH = 0-0
APPLIED TO FRONT SIDE OF BOTTOM CHORD.
- ADDT'L LOADS BASED ON 55 % OF GSL.

THIS TRUSS IS DESIGNED FOR RESIDENTIAL OR SMALL BUILDING REQUIREMENTS OF PART 9, NBCC 2010

THIS DESIGN COMPLIES WITH:
- PART 9 OF OBC 2012 , BCBC 2012 , ABC 2014
- CSA 086-09
- TPIC 2011

(55 % OF 23.0 P.S.F. G.S.L. PLUS
8.4 P.S.F. RAIN LOAD EQUALS
21.0 P.S.F. SPECIFIED ROOF LIVE LOAD

ALLOWABLE DEFL.(LL)= L/360 (0.44")
CALCULATED VERT. DEFL.(LL) = L/ 979 (0.16")
ALLOWABLE DEFL.(TL)= L/360 (0.44")
CALCULATED VERT. DEFL.(TL) = L/ 522 (0.30")

CSI: TC=0.81 (A-B:1) , BC=1.00 (F-G:1) , WB=0.85 (B-F:1) , SSI=0.66 (G-H:1)

DOL LUMBER=1.00 NAIL=1.00 LS BEND=1.00
COMP=1.00 SHEAR=1.00 TENS= 1.00

COMPANION LIVE LOAD FACTOR = 0.60

TRUSS PLATE MANUFACTURER IS NOT RESPONSIBLE FOR QUALITY CONTROL IN THE TRUSS MANUFACTURING PLANT .

NAIL VALUES

PLATE	GRIP(DRY) (PSI) MAX	MIN	SHEAR (PLI) MAX	MIN	SECTION (PLI) MAX	MIN
MT20	618	354	1667	822	2284	1656

A-1073869

CONTINUED

		QUANTITY	PLY	JOB DESC.	DRWG NO.
253639	H14	1	1	TRUSS DESC.	

Alpa Roof Truss, Maple

Version 7.620 S Apr 16 2015 MiTek Industries, Inc. Fri Jul 17 15:02:03 2015 Page 1
ID:AyrJx9Y?fa2EXF7DRQxSq4zMEz1-oD_yOMLaLAtBChCe8pmr3w_IXS4pusZ2kx6yOUyx8J
Scale = 1:49.3

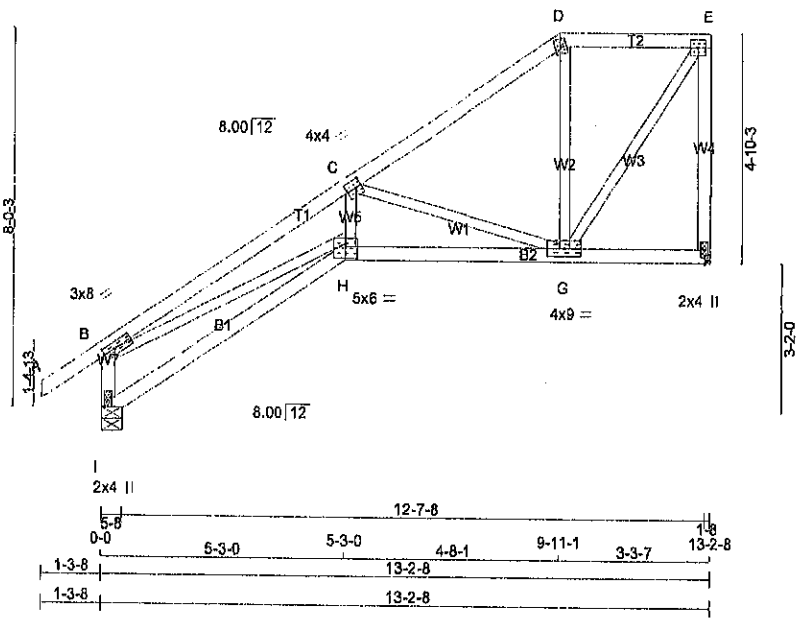

TOTAL WEIGHT = 59 lb
[M][F]

LUMBER
N. L. G. A. RULES

CHORDS	SIZE		LUMBER	DESCR.
I - B	2x4	DRY	No.2	SPF
A - D	2x4	DRY	No.2	SPF
D - E	2x4	DRY	No.2	SPF
F - E	2x4	DRY	No.2	SPF
I - H	2x4	DRY	No.2	SPF
H - F	2x4	DRY	No.2	SPF
ALL WEBS	2x3	DRY	No.2	SPF

DRY: SEASONED LUMBER.

PLATES (table is in inches)

JT	TYPE	PLATES	W	LEN	Y	X
B	TMVW-t	MT20	3.0	8.0	1.50	3.25
C	TMWW-t	MT20	4.0	4.0	2.00	1.50
D	TTW+m	MT20	3.0	4.0		
E	TMVW-t	MT20	4.0	4.0		
F	BMV1+p	MT20	2.0	4.0		
G	BMWWW-t	MT20	4.0	9.0		
H	BBWW-l	MT20	5.0	6.0	3.00	3.00
I	BMV1+p	MT20	2.0	4.0	Edge	

Edge - INDICATES REFERENCE CORNER OF PLATE TOUCHES EDGE OF CHORD.

NOTES- (1)
1) Lateral brace(s) shown shall be 1x4 for Part 9 design as per OBC 9.23.13.11, and no less than 2x4 for Part 4 design.

DIMENSIONS, SUPPORTS AND LOADINGS SPECIFIED BY FABRICATOR TO BE VERIFIED BY BUILDING DESIGNER

BEARINGS

JT	FACTORED GROSS REACTION VERT	HORZ	MAXIMUM FACTORED GROSS REACTION DOWN	HORZ	UPLIFT	INPUT BRG IN-SX	REQRD BRG IN-SX
I	676	0	676	0	0	5-8	1-8
F	581	0	581	0	0	HANGER BY OTHERS	
						MIN. SEAT SIZE: 1-8	

UNFACTORED REACTIONS

JT	1ST LCASE COMBINED	MAX./MIN. COMPONENT REACTIONS SNOW	LIVE	PERM.LIVE	WIND	DEAD	SOIL
I	475	335 / 0	0 / 0	0 / 0	0 / 0	140 / 0	0 / 0
F	409	277 / 0	0 / 0	0 / 0	0 / 0	132 / 0	0 / 0

BEARING MATERIAL TO BE SPF NO.2 OR BETTER AT JOINT(S) I

BRACING
TOP CHORD TO BE SHEATHED OR MAX. PURLIN SPACING = 4.84FT.
MAX. UNBRACED BOTTOM CHORD LENGTH = 10.00FT. OR RIGID CEILING DIRECTLY APPLIED.

LOADING
TOTAL LOAD CASES: (4)

CHORDS

MEMB. FR-TO	MAX. FACTORED FORCE (LBS)	FACTORED VERT. LOAD LC1 (PLF) FROM	TO	MAX CSI (LC)	MAX UNBRAC LENGTH
I- B	-832 / 0	0.0	0.0	0.07 (1)	7.81
A- B	0 / 27	-70.5	-70.5	0.09 (1)	10.00
B- C	-1689 / 0	-70.5	-70.5	0.29 (1)	4.84
C- D	-400 / 0	-70.5	-70.5	0.18 (1)	6.25
D- E	-314 / 0	-70.5	-70.5	0.10 (1)	6.25
F- E	-564 / 0	0.0	0.0	0.22 (1)	7.81
I- H	0 / 0	-17.5	-17.5	0.14 (4)	10.00
H- G	0 / 1374	-17.5	-17.5	0.27 (1)	10.00
G- F	0 / 0	-17.5	-17.5	0.09 (4)	10.00

WEBS

MEMB. FR-TO	MAX. FACTORED FORCE (LBS)	MAX CSI (LC)
B- H	0 / 1530	0.34 (1)
H- C	0 / 655	0.15 (1)
C- G	-1111 / 0	0.45 (1)
G- D	-30 / 40	0.01 (4)
G- E	0 / 548	0.12 (1)

DESIGN CRITERIA

SPECIFIED LOADS:

TOP CH.	LL	=	21.0	PSF
	DL	=	3.0	PSF
BOT CH.	LL	=	0.0	PSF
	DL	=	7.0	PSF
TOTAL LOAD		=	31.0	PSF

SPACING = 24.0 IN. C/C

LOADING IN FLAT SECTION BASED ON A SLOPE OF 2.00/12 MINIMUM

THIS TRUSS IS DESIGNED FOR RESIDENTIAL OR SMALL BUILDING REQUIREMENTS OF PART 9, NBCC 2010

THIS DESIGN COMPLIES WITH:
- PART 9 OF OBC 2012 , BCBC 2012 , ABC 2014
- CSA 086-09
- TPIC 2011

(55 % OF 23.0 P.S.F. G.S.L. PLUS
8.4 P.S.F. RAIN LOAD EQUALS
21.0 P.S.F. SPECIFIED ROOF LIVE LOAD

ALLOWABLE DEFL.(LL)= L/360 (0.44")
CALCULATED VERT. DEFL.(LL) = L/ 999 (0.08")
ALLOWABLE DEFL.(TL)= L/360 (0.44")
CALCULATED VERT. DEFL.(TL) = L/ 999 (0.14")

CSI: TC=0.29 (B-C:1) , BC=0.27 (G-H:1) , WB=0.45 (C-G:1) , SSI=0.14 (B-C:1)

DOL LUMBER=1.00 NAIL=1.00 LS BEND=1.10 COMP=1.10 SHEAR=1.10 TENS= 1.10

COMPANION LIVE LOAD FACTOR = 0.50

TRUSS PLATE MANUFACTURER IS NOT RESPONSIBLE FOR QUALITY CONTROL IN THE TRUSS MANUFACTURING PLANT .

NAIL VALUES

PLATE	GRIP(DRY) (PSI) MAX	MIN	SHEAR (PLI) MAX	MIN	SECTION (PLI) MAX	MIN
MT20	618	354	1667	822	2284	1656

PLATE PLACEMENT TOL. = 0.250 inches

PLATE ROTATION TOL. = 5.0 Deg.

JSI GRIP= 0.86 (B) (INPUT = 0.90)
JSI METAL= 0.49 (H) (INPUT = 1.00)

LICENSED PROFESSIONAL ENGINEER
07.17.2015
R. TURENNE
100157040
PROVINCE OF ONTARIO

A-N073868

JOB NAME	TRUSS NAME	QUANTITY	PLY	JOB DESC.	DRWG NO.
253639	H13SG	1	1	TRUSS DESC.	

Alpa Roof Truss, Maple

Version 7.620 S Apr 15 2015 MiTek Industries, Inc. Fri Jul 17 15:23:34 2015 Page 1
ID:AyrJx9Y?fa2EXF7DRQxSq4zMEz1-VaV?LozNJqW0a5OmHRQauAyLAsjbtdB4bILnC9yx8??
Scale = 1:71.6

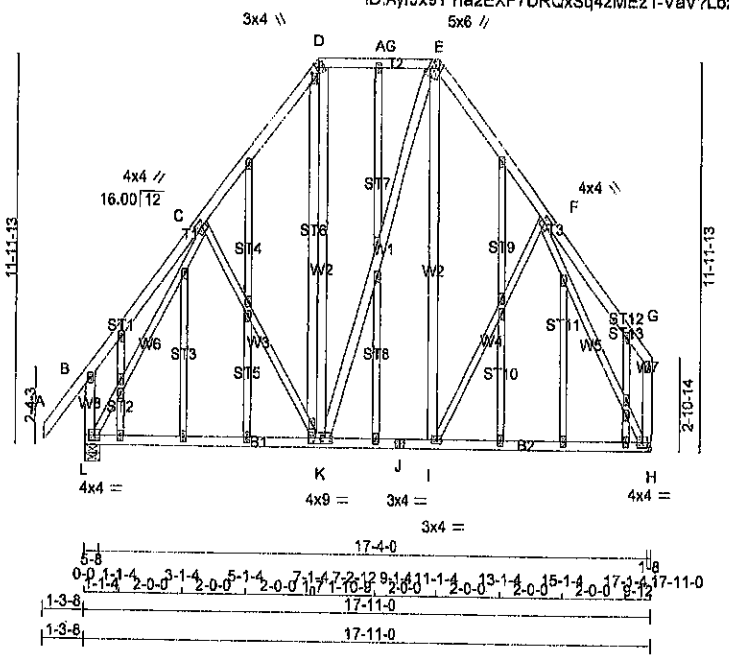

TOTAL WEIGHT = 173 lb
[M][F]

LUMBER
N. L. G. A. RULES

CHORDS	SIZE		LUMBER	DESCR.
A - D	2x4	DRY	No.2	SPF
D - E	2x4	DRY	No.2	SPF
E - G	2x4	DRY	No.2	SPF
L - B	2x4	DRY	No.2	SPF
H - G	2x4	DRY	No.2	SPF
L - J	2x4	DRY	No.2	SPF
J - H	2x4	DRY	No.2	SPF
ALL WEBS	2x4	DRY	No.2	SPF
EXCEPT				
C - K	2x3	DRY	No.2	SPF
I - F	2x3	DRY	No.2	SPF
L - C	2x3	DRY	No.2	SPF
F - H	2x3	DRY	No.2	SPF
ALL GABLE WEBS	2x3	DRY	No.2	SPF
EXCEPT				
ST3	2x4	DRY	No.2	SPF

DRY: SEASONED LUMBER.

GABLE STUDS SPACED AT 2-0-0 OC.

PLATES (table is in inches)

JT	TYPE	PLATES	W	LEN	Y	X
B	TMV+p	MT20	2.0	4.0		
C	TMWW-t	MT20	4.0	4.0	2.00	1.50
D	TTW+m	MT20	3.0	4.0	1.75	1.00
D	NP+w	MT20	2.0	4.0	4.25	0.75
E	TTWW+m	MT20	5.0	6.0	1.75	1.00
F	TMWW-t	MT20	4.0	4.0	2.00	1.25
G	TMV+p	MT20	2.0	4.0		
H	BMVW1-t	MT20	4.0	4.0		
I	BMWW-t	MT20	3.0	4.0		
J	BS-t	MT20	3.0	4.0		
K	BMWWW-t	MT20	4.0	9.0		
K	NP+w	MT20	2.0	4.0	0.75	0.50
L	BMVW1-t	MT20	4.0	4.0		

M, N, O, P, Q, Q, R, S, T, U, V, V, W, X, Y, Z, AA, AA, AB, AC, AD, AE, AF, AF

~~M NP+w MT20 2.0 4.0~~

LICENSED PROFESSIONAL ENGINEER
07.17.2015
R. TURENNE
100157040
PROVINCE OF ONTARIO

DIMENSIONS, SUPPORTS AND LOADINGS SPECIFIED BY FABRICATOR TO BE VERIFIED BY BUILDING DESIGNER

BEARINGS

JT	FACTORED GROSS REACTION VERT	HORZ	MAXIMUM FACTORED GROSS REACTION DOWN	HORZ	UPLIFT	INPUT BRG	REQRD BRG
L	901	0	901	0	0	IN-SX	IN-SX
H	803	0	803	0	0	5-8	1-8
						HANGER BY OTHERS	
						MIN. SEAT SIZE: 1-8	

UNFACTORED REACTIONS

JT	1ST LCASE COMBINED	MAX./MIN. COMPONENT REACTIONS SNOW	LIVE	PERM.LIVE	WIND	DEAD	SOIL
L	634	435 / 0	0 / 0	0 / 0	0 / 0	199 / 0	0 / 0
H	567	376 / 0	0 / 0	0 / 0	0 / 0	191 / 0	0 / 0

BEARING MATERIAL TO BE SPF NO.2 OR BETTER AT JOINT(S) L

BRACING
TOP CHORD TO BE SHEATHED OR MAX. PURLIN SPACING = 6.25FT.
MAX. UNBRACED BOTTOM CHORD LENGTH = 10.00FT. OR RIGID CEILING DIRECTLY APPLIED.

LOADING
TOTAL LOAD CASES: (4)

CHORDS

MEMB. FR-TO	MAX. FACTORED FORCE (LBS)	FACTORED VERT. LOAD LC1 (PLF) FROM	TO	MAX CSI (LC)	MAX UNBRAC LENGTH
A- B	0 / 40	-70.5	-70.5	0.10 (1)	10.00
B- C	0 / 24	-70.5	-70.5	0.15 (1)	10.00
C- D	-535 / 0	-70.5	-70.5	0.12 (1)	6.26
D-AG	-307 / 0	-78.0	-78.0	0.20 (1)	6.25
AG- E	-307 / 0	-78.0	-78.0	0.20 (1)	6.25
E- F	-522 / 0	-70.5	-70.5	0.10 (1)	6.25
F- G	0 / 23	-70.5	-70.5	0.13 (1)	10.00
L- B	-194 / 0	0.0	0.0	0.02 (1)	7.81
H- G	-89 / 0	0.0	0.0	0.01 (1)	7.81
L- K	0 / 346	-17.5	-17.5	0.22 (4)	10.00
K- J	0 / 300	-17.5	-17.5	0.21 (4)	10.00
J- I	0 / 300	-17.5	-17.5	0.21 (4)	10.00
I- H	0 / 317	-17.5	-17.5	0.20 (4)	10.00

WEBS

MEMB. FR-TO	MAX. FACTORED FORCE (LBS)	MAX CSI (LC)
C- K	-83 / 12	0.10 (1)
K- D	0 / 159	0.03 (1)
K- E	0 / 24	0.00 (1)
I- E	0 / 133	0.02 (4)
I- F	-40 / 24	0.05 (1)
L- C	-739 / 0	0.85 (1)
F- H	-734 / 0	0.89 (1)

DESIGN CRITERIA

SPECIFIED LOADS:

TOP CH.	LL	=	21.0	PSF
	DL	=	3.0	PSF
BOT CH.	LL	=	0.0	PSF
	DL	=	7.0	PSF
TOTAL LOAD		=	31.0	PSF

SPACING = 24.0 IN. C/C

LOADING IN FLAT SECTION BASED ON PIGGYBACK TRUSS WITH SLOPES OF 6.00/12 AND -6.00/12 AND RESPECTIVE WALL HEIGHTS OF 0-0 AND 0-0 AND AN ADDITIONAL DEAD LOAD OF 3.0 P.S.F.

THIS TRUSS IS DESIGNED FOR RESIDENTIAL OR SMALL BUILDING REQUIREMENTS OF PART 9, NBCC 2010

THIS DESIGN COMPLIES WITH:
- PART 9 OF OBC 2012 , BCBC 2012 , ABC 2014
- CSA 086-09
- TPIC 2011

(55 % OF 23.0 P.S.F. G.S.L. PLUS
8.4 P.S.F. RAIN LOAD EQUALS
21.0 P.S.F. SPECIFIED ROOF LIVE LOAD

ALLOWABLE DEFL.(LL)= L/360 (0.60")
CALCULATED VERT. DEFL.(LL) = L/ 999 (0.01")
ALLOWABLE DEFL.(TL)= L/360 (0.80")
CALCULATED VERT. DEFL.(TL) = L/ 999 (0.09")

CSI: TC=0.20 (D-E:1) , BC=0.22 (K-L:4) , WB=0.89 (F-H:1) , SSI=0.12 (D-E:1)

DOL LUMBER=1.00 NAIL=1.00 LS BEND=1.10 COMP=1.10 SHEAR=1.10 TENS= 1.10

COMPANION LIVE LOAD FACTOR = 0.50

TRUSS PLATE MANUFACTURER IS NOT RESPONSIBLE FOR QUALITY CONTROL IN THE TRUSS MANUFACTURING PLANT .

NAIL VALUES

PLATE	GRIP(DRY) (PSI) MAX	MIN	SHEAR (PLI) MAX	MIN	SECTION (PLI) MAX	MIN
MT20	618	354	1667	822	2284	1656

PLATE PLACEMENT TOL. = 0.250 inches

PLATE ROTATION TOL. = 5.0 Deg.

JSI GRIP= 0.85 (I) (INPUT = 0.90)
JSI METAL= 0.29 (C) (INPUT = 1.00)

A-N073867

CONTINUED ON PAGE 2

		QUANTITY	PLY	JOB DESC.	DRWG NO.
253639	H13	4	1	TRUSS DESC.	

Alpa Roof Truss, Maple

Version 7.620 S Apr 16 2015 MiTek Industries, Inc. Fri Jul 17 15:23:32 2015 Page 1
ID:AyrJx9Y?fa2EXF7DRQxSq4zMEz1-ZCNFx6y7oDGILnEO91O6pls?g217Pjhn8_sg8Gyx8?9
Scale = 1:71.6

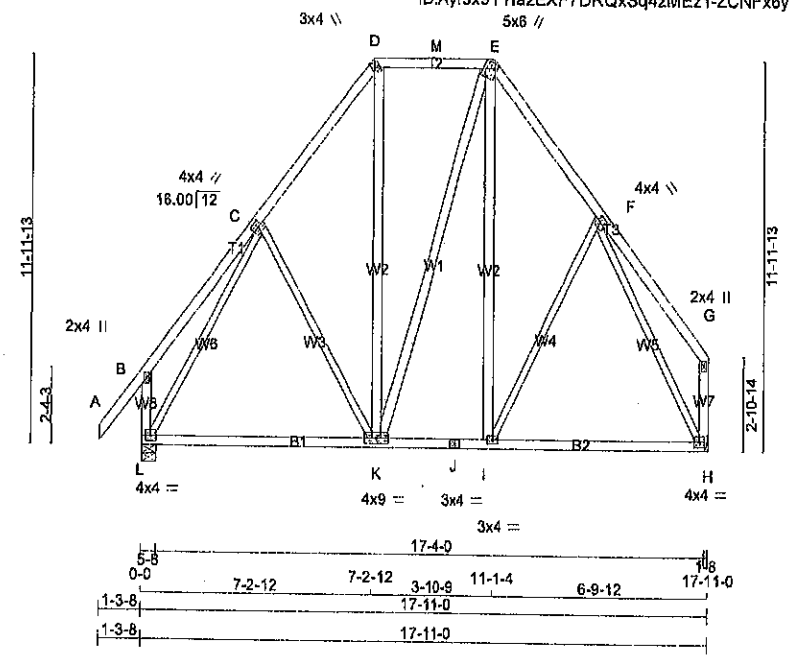

TOTAL WEIGHT = 4 X 124 = 495 lb

[M][F]

LUMBER
N. L. G. A. RULES

CHORDS	SIZE		LUMBER	DESCR.
A - D	2x4	DRY	No.2	SPF
D - E	2x4	DRY	No.2	SPF
E - G	2x4	DRY	No.2	SPF
L - B	2x4	DRY	No.2	SPF
H - G	2x4	DRY	No.2	SPF
L - J	2x4	DRY	No.2	SPF
J - H	2x4	DRY	No.2	SPF
ALL WEBS EXCEPT	2x4	DRY	No.2	SPF
C - K	2x3	DRY	No.2	SPF
I - F	2x3	DRY	No.2	SPF
L - C	2x3	DRY	No.2	SPF
F - H	2x3	DRY	No.2	SPF

DRY: SEASONED LUMBER.

PLATES (table is in inches)

JT	TYPE	PLATES	W	LEN	Y	X
B	TMV+p	MT20	2.0	4.0		
C	TMWW-t	MT20	4.0	4.0	2.00	1.50
D	TTW+m	MT20	3.0	4.0	1.75	1.00
E	TTWW+m	MT20	5.0	6.0	1.75	1.00
F	TMWW-t	MT20	4.0	4.0	2.00	1.25
G	TMV+p	MT20	2.0	4.0		
H	BMVW1-t	MT20	4.0	4.0		
I	BMWW-t	MT20	3.0	4.0		
J	BS-t	MT20	3.0	4.0		
K	BMWWW-t	MT20	4.0	9.0		
L	BMVW1-t	MT20	4.0	4.0		

NOTES- (1)
1) Lateral brace(s) shown shall be 1x4 for Part 9 design as per OBC 9.23.13.11, and no less than 2x4 for Part 4 design.

LICENSED PROFESSIONAL ENGINEER
07/17/2015
R. TURENNE
100157040
PROVINCE OF ONTARIO

DIMENSIONS, SUPPORTS AND LOADINGS SPECIFIED BY FABRICATOR TO BE VERIFIED BY BUILDING DESIGNER

BEARINGS

JT	FACTORED GROSS REACTION VERT	HORZ	MAXIMUM FACTORED GROSS REACTION DOWN	HORZ	UPLIFT	INPUT BRG IN-SX	REQRD BRG IN-SX
L	901	0	901	0	0	5-8	1-8
H	803	0	803	0	0	HANGER BY OTHERS	
						MIN. SEAT SIZE: 1-8	

UNFACTORED REACTIONS

JT	1ST LCASE COMBINED	MAX./MIN. COMPONENT REACTIONS SNOW	LIVE	PERM.LIVE	WIND	DEAD	SOIL
L	634	435 / 0	0 / 0	0 / 0	0 / 0	199 / 0	0 / 0
H	567	376 / 0	0 / 0	0 / 0	0 / 0	191 / 0	0 / 0

BEARING MATERIAL TO BE SPF NO.2 OR BETTER AT JOINT(S) L

BRACING
TOP CHORD TO BE SHEATHED OR MAX. PURLIN SPACING = 6.25FT.
MAX. UNBRACED BOTTOM CHORD LENGTH = 10.00FT. OR RIGID CEILING DIRECTLY APPLIED.

LOADING
TOTAL LOAD CASES: (4)

CHORDS

MEMB. FR-TO	MAX. FACTORED FORCE (LBS)	FACTORED VERT. LOAD (PLF) FROM	TO	LC1 CSI	MAX (LC)	MAX UNBRAC LENGTH
A- B	0 / 40	-70.5	-70.5	0.10	(1)	10.00
B- C	0 / 24	-70.5	-70.5	0.15	(1)	10.00
C- D	-535 / 0	-70.5	-70.5	0.12	(1)	6.25
D- M	-307 / 0	-78.0	-78.0	0.20	(1)	6.25
M- E	-307 / 0	-78.0	-78.0	0.20	(1)	6.25
E- F	-522 / 0	-70.5	-70.5	0.10	(1)	6.25
F- G	0 / 23	-70.5	-70.5	0.13	(1)	10.00
L- B	-194 / 0	0.0	0.0	0.02	(1)	7.81
H- G	-89 / 0	0.0	0.0	0.01	(1)	7.81
L- K	0 / 346	-17.5	-17.5	0.22	(4)	10.00
K- J	0 / 300	-17.5	-17.5	0.21	(4)	10.00
J- I	0 / 300	-17.5	-17.5	0.21	(4)	10.00
I- H	0 / 317	-17.5	-17.5	0.20	(4)	10.00

WEBS

MEMB. FR-TO	MAX. FACTORED FORCE (LBS)	MAX CSI (LC)
C- K	-83 / 12	0.10 (1)
K- D	0 / 159	0.03 (1)
K- E	0 / 24	0.00 (1)
I- E	0 / 133	0.02 (4)
I- F	-40 / 24	0.05 (1)
L- C	-739 / 0	0.85 (1)
F- H	-734 / 0	0.89 (1)

DESIGN CRITERIA

SPECIFIED LOADS:

TOP CH.	LL	=	21.0	PSF
	DL	=	3.0	PSF
BOT CH.	LL	=	0.0	PSF
	DL	=	7.0	PSF
TOTAL LOAD		=	31.0	PSF

SPACING = 24.0 IN. C/C

LOADING IN FLAT SECTION BASED ON PIGGYBACK TRUSS WITH SLOPES OF 6.00/12 AND -6.00/12 AND RESPECTIVE WALL HEIGHTS OF 0-0 AND 0-0 AND AN ADDITIONAL DEAD LOAD OF 3.0 P.S.F.

THIS TRUSS IS DESIGNED FOR RESIDENTIAL OR SMALL BUILDING REQUIREMENTS OF PART 9, NBCC 2010

THIS DESIGN COMPLIES WITH:
- PART 9 OF OBC 2012 , BCBC 2012 , ABC 2014
- CSA 086-09
- TPIC 2011

(55 % OF 23.0 P.S.F. G.S.L. PLUS 8.4 P.S.F. RAIN LOAD EQUALS 21.0 P.S.F. SPECIFIED ROOF LIVE LOAD

ALLOWABLE DEFL.(LL)= L/360 (0.60")
CALCULATED VERT. DEFL.(LL) = L/ 999 (0.01")
ALLOWABLE DEFL.(TL)= L/360 (0.60")
CALCULATED VERT. DEFL.(TL) = L/ 999 (0.09")

CSI: TC=0.20 (D-E:1) , BC=0.22 (K-L:4) , WB=0.89 (F-H:1) , SSI=0.12 (D-E:1)

DOL LUMBER=1.00 NAIL=1.00 LS BEND=1.10 COMP=1.10 SHEAR=1.10 TENS= 1.10

COMPANION LIVE LOAD FACTOR = 0.50

TRUSS PLATE MANUFACTURER IS NOT RESPONSIBLE FOR QUALITY CONTROL IN THE TRUSS MANUFACTURING PLANT .

NAIL VALUES

PLATE	GRIP(DRY) (PSI) MAX	MIN	SHEAR (PLI) MAX	MIN	SECTION (PLI) MAX	MIN
MT20	618	354	1667	822	2284	1656

PLATE PLACEMENT TOL. = 0.250 Inches

PLATE ROTATION TOL. = 5.0 Deg.

JSI GRIP= 0.85 (I) (INPUT = 0.90)
JSI METAL= 0.29 (C) (INPUT = 1.00)

A-N073866

JOB NAME	TRUSS NAME	QUANTITY	PLY	JOB DESC.	DRWG NO.
253639	H01-Cond2	1	1	TRUSS DESC.	

Alpa Roof Truss, Maple

Version 7.620 S Apr 15 2015 MiTek Industries, Inc. Fri Jul 17 16:02:01 2015 Page 1
ID:AyrJx9Y?fa2EXF7DRQxSq4zMEz1-sqsC_gKKqYcTy02G1OkN_VuLceH7QrBlHddsKbyx8JK
Scale = 1:60.6

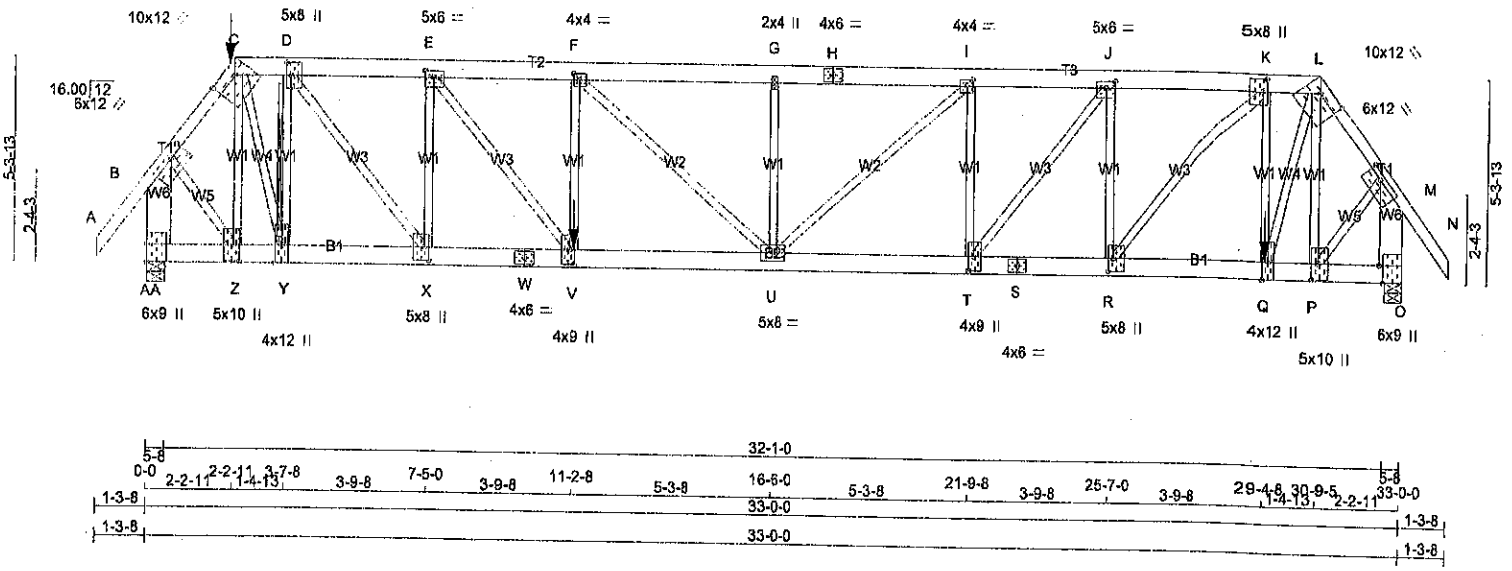

TOTAL WEIGHT = 209 lb
[M]

LUMBER
N. L. G. A. RULES

CHORDS	SIZE		LUMBER	DESCR.
A - C	2x4	DRY	No.2	SPF
C - H	2x6	DRY	No.2	SPF
H - L	2x6	DRY	No.2	SPF
L - N	2x4	DRY	No.2	SPF
AA- B	2x6	DRY	No.2	SPF
O - M	2x6	DRY	No.2	SPF
AA- W	2x6	DRY	No.2	SPF
W - S	2x6	DRY	No.2	SPF
S - O	2x6	DRY	No.2	SPF
ALL WEBS EXCEPT	2x3	DRY	No.2	SPF

DRY: SEASONED LUMBER.

PLATES (table is in inches)

JT	TYPE	PLATES	W	LEN	Y	X
B	TMVW-t	MT20	6.0	12.0	1.50	4.75
C	TTWW-h	MT20	10.0	12.0	3.00	7.50
D	TMWW+t	MT20	5.0	8.0	4.00	1.50
E	TMWW-t	MT20	5.0	6.0	2.00	2.75
F	TMWW-t	MT20	4.0	4.0	2.00	1.75
G	TMW+w	MT20	2.0	4.0		
H	TS-t	MT20	4.0	6.0		
I	TMWW-t	MT20	4.0	4.0	2.00	1.75
J	TMWW-t	MT20	5.0	6.0	2.00	2.75
K	TMWW+t	MT20	5.0	8.0	4.00	1.50
L	TTWW-h	MT20	10.0	12.0	3.00	7.50
M	TMVW-t	MT20	6.0	12.0	1.50	4.75
O	BMV1+t	MT20	6.0	9.0	Edge	1.25
P	BMWW+t	MT20	5.0	10.0	5.00	2.00
Q	BMWW+t	MT20	4.0	12.0	Edge	
R	BMWW+t	MT20	5.0	8.0	4.00	1.50
S	BS-t	MT20	4.0	6.0		
T	BMWW+t	MT20	4.0	9.0	4.50	1.50
U	BMWWW-t	MT20	5.0	8.0		
V	BMWW+t	MT20	4.0	9.0	4.50	1.50
W	BS-t	MT20	4.0	6.0		
X	BMWW+t	MT20	5.0	8.0	4.00	1.50
Y	BMWW+t	MT20	4.0	12.0	Edge	
Z	BMWW+t	MT20	5.0	10.0	5.00	2.00

LICENSED PROFESSIONAL ENGINEER
07-17-2015
R. TURENNE
100157040
PROVINCE OF ONTARIO

DIMENSIONS, SUPPORTS AND LOADINGS SPECIFIED BY FABRICATOR TO BE VERIFIED BY BUILDING DESIGNER

BEARINGS

JT	FACTORED GROSS REACTION VERT	HORZ	MAXIMUM FACTORED GROSS REACTION DOWN	HORZ	UPLIFT	INPUT BRG IN-SX	REQRD BRG IN-SX
AA	3403	0	3403	0	0	5-8	3-13
O	5398	0	5398	0	0	5-8	5-8

UNFACTORED REACTIONS

JT	1ST LCASE COMBINED	SNOW	MAX./MIN. COMPONENT REACTIONS LIVE	PERM.LIVE	WIND	DEAD	SOIL
AA	2467	1274 / 0	0 / 0	0 / 0	0 / 0	1194 / 0	0 / 0
O	3837	2404 / 0	0 / 0	0 / 0	0 / 0	1433 / 0	0 / 0

BEARING MATERIAL TO BE SPF NO.2 OR BETTER AT JOINT(S) AA, O

BRACING
TOP CHORD TO BE SHEATHED OR MAX. PURLIN SPACING = 3.29FT.
MAX. UNBRACED BOTTOM CHORD LENGTH = 10.00FT. OR RIGID CEILING DIRECTLY APPLIED.

2x4 DRY SPF No.2 T-BRACE REQUIRED AT D-Y
FASTEN T AND I-BRACES TO NARROW EDGE OF WEB WITH ONE ROW PER PLY OF 3" COMMON WIRE NAILS @ 6" O.C. WITH 3" MINIMUM END DISTANCE. BRACE MUST COVER 90% OF WEB LENGTH.
END VERTICAL(S) MUST BE SHEATHED OR HAVE BRACES AS INDICATED IN THE MAX. UNBRACED LENGTH COLUMN OF THE TABLE BELOW

LOADING
TOTAL LOAD CASES: (4)

CHORDS

MEMB. FR-TO	MAX. FACTORED FORCE (LBS)	FACTORED VERT. LOAD LC1 (PLF) FROM	TO	MAX CSI (LC)	MAX UNBRAC LENGTH
A- B	0 / 40	-70.5	-70.5	0.11 (1)	10.00
B- C	-2569 / 0	-70.5	-70.5	0.16 (1)	4.14
C- D	-2237 / 0	-138.7	-138.7	0.12 (4)	5.36
D- E	-4171 / 0	-138.7	-138.7	0.30 (1)	3.97
E- F	-5481 / 0	-138.7	-138.7	0.32 (1)	3.52
F- G	-5551 / 0	-70.5	-70.5	0.34 (1)	3.49
G- H	-5551 / 0	-70.5	-70.5	0.34 (1)	3.49
H- I	-5551 / 0	-70.5	-70.5	0.34 (1)	3.49
I- J	-5061 / 0	-70.5	-70.5	0.25 (1)	3.72
J- K	-4439 / 0	-70.5	-70.5	0.34 (1)	3.82
K- L	-3377 / 0	-70.5	-70.5	0.27 (1)	4.37
L- M	-3998 / 0	-70.5	-70.5	0.29 (1)	3.29
M- N	0 / 40	-70.5	-70.5	0.11 (1)	10.00
AA- B	-3600 / 0	0.0	0.0	0.25 (1)	6.35
O- M	-5308 / 0	0.0	0.0	0.38 (1)	5.30
AA- Z	0 / 0	-34.5	-34.5	0.24 (1)	10.00
Z- Y	0 / 1536	-34.5	-34.5	0.43 (1)	10.00
Y- X	0 / 2237	-34.5	-34.5	0.37 (1)	10.00
X- W	0 / 4171	-34.5	-34.5	0.62 (1)	10.00
W- V	0 / 4171	-34.5	-34.5	0.62 (1)	10.00
V- U	0 / 5481	-17.5	-17.5	0.79 (1)	10.00
U- T	0 / 5061	-17.5	-17.5	0.72 (1)	10.00
T- S	0 / 4439	-17.5	-17.5	0.62 (1)	10.00
S- R	0 / 4439	-17.5	-17.5	0.62 (1)	10.00
R- Q	0 / 3376	-17.5	-17.5	0.69 (1)	10.00
Q- P	0 / 2383	-263.9	-263.9	0.68 (1)	10.00
P- O	0 / 0	-263.9	-263.9	0.37 (1)	10.00

WEBS

MEMB. FR-TO	MAX. FACTORED FORCE (LBS)	MAX CSI (LC)
Z- C	-729 / 0	0.28 (1)
C- Y	0 / 2532	0.63 (1)
Y- D	-2696 / 0	0.59 (1)
D- X	0 / 3145	0.78 (1)
X- E	-2289 / 0	0.87 (1)
E- V	0 / 2128	0.64 (4)
V- F	-461 / 237	0.18 (1)
F- U	-395 / 96	0.41 (4)
U- G	-397 / 0	0.15 (1)
U- I	0 / 875	0.26 (4)
T- I	-751 / 0	0.28 (1)
T- J	0 / 1011	0.27 (4)
R- J	-1165 / 0	0.44 (1)
R- K	0 / 1728	0.43 (1)
Q- K	-1261 / 0	0.47 (1)
Q- L	0 / 3586	0.89 (1)
P- L	-573 / 0	0.22 (1)
B- Z	0 / 1992	0.49 (1)
P- M	0 / 3075	0.76 (1)

FACTORED CONCENTRATED LOADS (LBS)

JT	LOC.	LC1	MAX-	MAX+	FACE	DIR.	TYPE
C	2-2-11	-114	-114	---	FRONT	VERT	TOTAL
Q	29-4-8	-2766	-2766	---	FRONT	VERT	TOTAL
V	11-2-8	-1133	-1133	---	FRONT	VERT	DEAD

DESIGN CRITERIA

*** SPECIAL LOADS ANALYSIS ***
GEOMETRY AND/OR BASIC LOADS CHANGED BY USER.
LOADS WERE DERIVED FROM USER INPUT
NO FURTHER MODIFICATIONS WERE MADE

SPECIFIED LOADS:

TOP CH.	LL	=	21.0	PSF
	DL	=	3.0	PSF
BOT CH.	LL	=	0.0	PSF
	DL	=	7.0	PSF
TOTAL LOAD		=	31.0	PSF

SPACING = 24.0 IN. C/C

LOADING IN FLAT SECTION BASED ON A SLOPE OF 2.00/12 MINIMUM

GIRDER TYPE: CPrimeHip
SIDE SETBACK = 2-2-11
END SETBACK = 5-10-8
END WALL WIDTH = 0-0
CORNER FRAMING TYPE: CONVENTIONAL
END JACK TYPE: CONVENTIONAL
APPLIED TO FRONT SIDE
- ADDT'L LOADS BASED ON 55 % OF GSL.
LOADS APPLIED TO FIRST 11-2-8 OF SPAN MEASURED FROM THE LEFT.

GIRDER TYPE: CStdGirder
START DISTANCE = 29-4-8
START SPAN CARRIED = 13-2-8
END DISTANCE = 33-0-0
END SPAN CARRIED = 13-2-8
END WALL WIDTH = 0-0
APPLIED TO FRONT SIDE OF BOTTOM CHORD.
- ADDT'L LOADS BASED ON 55 % OF GSL.

*** NON STANDARD GIRDER ***
ADDT'L USER-DEFINED LOADS APPLIED TO ALL LOAD CASES.

THIS TRUSS IS DESIGNED FOR RESIDENTIAL OR SMALL BUILDING REQUIREMENTS OF PART 9, NBCC 2010

THIS DESIGN COMPLIES WITH:
- PART 9 OF OBC 2012 , BCBC 2012 , ABC 2014
- CSA 086-09
- TPIC 2011

(55 % OF 23.0 P.S.F. G.S.L. PLUS
8.4 P.S.F. RAIN LOAD EQUALS
21.0 P.S.F. SPECIFIED ROOF LIVE LOAD

ALLOWABLE DEFL.(LL)= L/360 (1.10")
CALCULATED VERT. DEFL.(LL) = L/ 999 (0.18")
ALLOWABLE DEFL.(TL)= L/360 (1.10")
CALCULATED VERT. DEFL.(TL) = L/ 943 (0.42")

CSI: TC=0.38 (M-O:1) , BC=0.79 (U-V:1) ,
WB=0.89 (L-Q:1) , SSI=0.55 (P-Q:1)

DOL LUMBER=1.00 NAIL=1.00 LS BEND=1.00
COMP=1.00 SHEAR=1.00 TENS= 1.00

COMPANION LIVE LOAD FACTOR = 0.50

A-1073865

CONTINUED ON PAGE 2

PLATES (table is in inches)

JT	TYPE	PLATES	W	LEN	Y	X
AA	BMV1+t	MT20	6.0	9.0	5.50	

Edge - INDICATES REFERENCE CORNER OF PLATE TOUCHES EDGE OF CHORD.

HANGERS NOTES

1) SPECIAL HANGER(S) OR CONNECTION(S) REQUIRED TO SUPPORT CONCENTRATED LOAD(S) 114.2 lbs FACTORED DOWN AT 2-2-11 ON TOP CHORD, AND 1268.4 lbs FACTORED DOWN AT 11-2-8, AND 2756.3 lbs FACTORED DOWN AT 29-4-8 ON BOTTOM CHORD. DESIGN FOR UNSPECIFIED CONNECTION(S) IS DELEGATED TO THE BUILDING DESIGNER.

NOTES- (1)

1) Lateral brace(s) shown shall be 1x4 for Part 9 design as per OBC 9.23.13.11, and no less than 2x4 for Part 4 design.

LICENSED PROFESSIONAL ENGINEER
07.17.2015
R. TURENNE
100157040
PROVINCE OF ONTARIO

AUTOSOLVE HEELS OFF

TRUSS PLATE MANUFACTURER IS NOT RESPONSIBLE FOR QUALITY CONTROL IN THE TRUSS MANUFACTURING PLANT.

NAIL VALUES

PLATE	GRIP(DRY) (PSI) MAX	MIN	SHEAR (PLI) MAX	MIN	SECTION (PLI) MAX	MIN
MT20	618	354	1667	822	2284	1656

PLATE PLACEMENT TOL. = 0.250 Inches

PLATE ROTATION TOL. = 5.0 Deg.

JSI GRIP= 0.90 (M) (INPUT = 0.90)
JSI METAL= 0.91 (S) (INPUT = 1.00)

A-403865(2)

JOB NAME	TRUSS NAME	QUANTITY	PLY	JOB DESC.	DRWG NO.
253639	H01-Cond1	1	1	TRUSS DESC.	

Alpa Roof Truss, Maple

Version 7.620 S Apr 15 2015 MiTek Industries, Inc. Fri Jul 17 15:02:00 2015 Page 1
ID:AyrJx9Y?fa2EXF7DRQxSq4zMEz1-OelpmKJi3FUcLET4ThC8SIM9YEz3hObc2zuln9yx8JI
Scale = 1:60.6

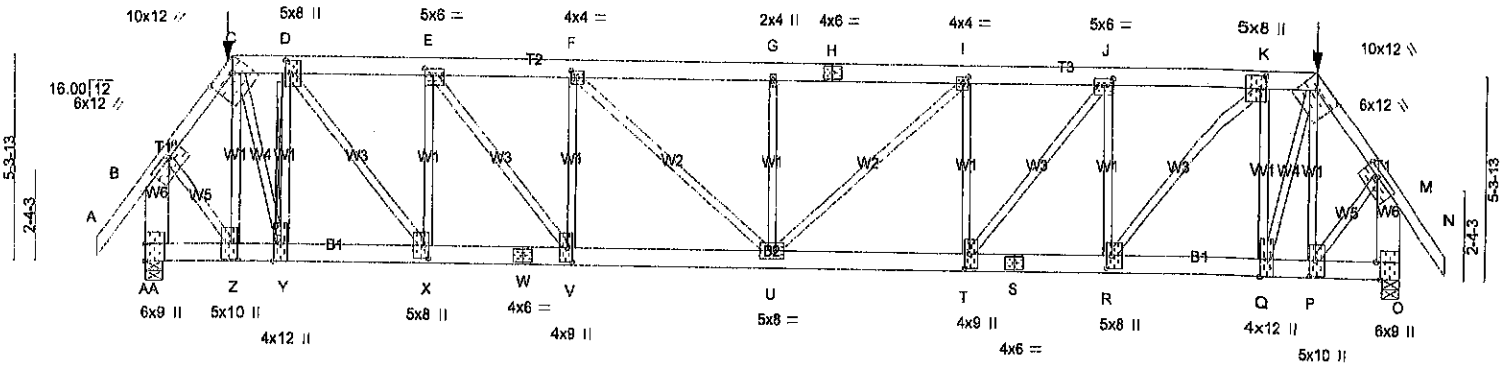

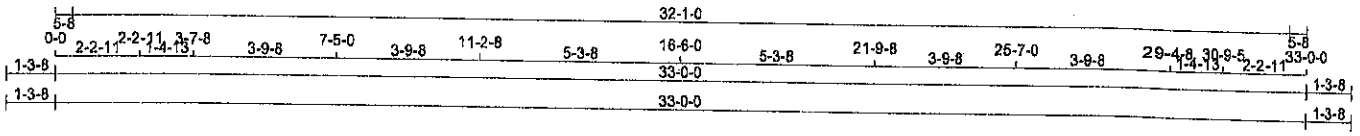

TOTAL WEIGHT = 209 lb
[M]

LUMBER
N. L. G. A. RULES

CHORDS	SIZE		LUMBER	DESCR.
A - C	2x4	DRY	No.2	SPF
C - H	2x6	DRY	No.2	SPF
H - L	2x6	DRY	No.2	SPF
L - N	2x4	DRY	No.2	SPF
AA- B	2x8	DRY	No.2	SPF
O - M	2x8	DRY	No.2	SPF
AA- W	2x6	DRY	No.2	SPF
W - S	2x6	DRY	No.2	SPF
S - O	2x6	DRY	No.2	SPF
ALL WEBS EXCEPT	2x3	DRY	No.2	SPF

DRY: SEASONED LUMBER.

PLATES (table is in inches)

JT	TYPE	PLATES	W	LEN	Y	X
B	TMVW-t	MT20	6.0	12.0	1.50	4.75
C	TTWW-h	MT20	10.0	12.0	3.00	7.50
D	TMWW+t	MT20	5.0	8.0	4.00	1.50
E	TMWW-t	MT20	5.0	6.0	2.00	2.75
F	TMWW-t	MT20	4.0	4.0	2.00	1.75
G	TMW+w	MT20	2.0	4.0		
H	TS-t	MT20	4.0	6.0		
I	TMWW-t	MT20	4.0	4.0	2.00	1.75
J	TMWW-t	MT20	5.0	6.0	2.00	2.75
K	TMWW+t	MT20	5.0	8.0	4.00	1.50
L	TTWW-h	MT20	10.0	12.0	3.00	7.50
M	TMVW-t	MT20	6.0	12.0	1.50	4.75
O	BMV1+t	MT20	6.0	9.0	Edge	1.25
P	BMWW+t	MT20	5.0	10.0	5.00	2.00
Q	BMWW+t	MT20	4.0	12.0	Edge	
R	BMWW+t	MT20	5.0	8.0	4.00	1.50
S	BS-t	MT20	4.0	6.0		
T	BMWW+t	MT20	4.0	9.0	4.50	1.50
U	BMWWW-t	MT20	5.0	8.0		
V	BMWW+t	MT20	4.0	9.0	4.50	1.50
W	BS-t	MT20	4.0	6.0		
X	BMWW+t	MT20	5.0	8.0	4.00	1.50
Y	BMWW+t	MT20	4.0	12.0	Edge	
Z	BMWW+t	MT20	5.0	10.0	5.00	2.00

LICENSED PROFESSIONAL ENGINEER
07.17.2015
R. TURENNE
100157040
PROVINCE OF ONTARIO

DIMENSIONS, SUPPORTS AND LOADINGS SPECIFIED BY FABRICATOR TO BE VERIFIED BY BUILDING DESIGNER

BEARINGS

JT	FACTORED GROSS REACTION VERT	HORZ	MAXIMUM FACTORED GROSS REACTION DOWN	HORZ	UPLIFT	INPUT BRG IN-SX	REQRD BRG IN-SX
AA	2919	0	2919	0	0	5-8	3-3
O	2919	0	2919	0	0	5-8	3-3

UNFACTORED REACTIONS

JT	1ST LCASE COMBINED	SNOW	MAX./MIN. COMPONENT REACTIONS LIVE	PERM.LIVE	WIND	DEAD	SOIL
AA	2055	1400 / 0	0 / 0	0 / 0	0 / 0	655 / 0	0 / 0
O	2055	1400 / 0	0 / 0	0 / 0	0 / 0	655 / 0	0 / 0

BEARING MATERIAL TO BE SPF NO.2 OR BETTER AT JOINT(S) AA, O

BRACING
TOP CHORD TO BE SHEATHED OR MAX. PURLIN SPACING = 3.60FT.
MAX. UNBRACED BOTTOM CHORD LENGTH = 10.00FT. OR RIGID CEILING DIRECTLY APPLIED.

2x4 DRY SPF No.2 T-BRACE REQUIRED AT D-Y
FASTEN T AND I-BRACES TO NARROW EDGE OF WEB WITH ONE ROW PER PLY OF 3" COMMON WIRE NAILS @ 6" O.C. WITH 3" MINIMUM END DISTANCE. BRACE MUST COVER 90% OF WEB LENGTH.
END VERTICAL(S) MUST BE SHEATHED OR HAVE BRACES AS INDICATED IN THE MAX. UNBRACED LENGTH COLUMN OF THE TABLE BELOW

LOADING
TOTAL LOAD CASES: (4)

CHORDS

MEMB. FR-TO	MAX. FACTORED FORCE (LBS)	FACTORED VERT. LOAD LC1 (PLF) FROM	TO	MAX CSI (LC)	MAX UNBRAC LENGTH
A- B	0 / 40	-70.5	-70.5	0.11 (1)	10.00
B- C	-2195 / 0	-70.5	-70.5	0.14 (1)	4.47
C- D	-1887 / 0	-138.7	-138.7	0.08 (1)	5.75
D- E	-3427 / 0	-138.7	-138.7	0.25 (1)	4.38
E- F	-4410 / 0	-138.7	-138.7	0.28 (1)	3.91
F- G	-4930 / 0	-138.7	-138.7	0.40 (1)	3.60
G- H	-4930 / 0	-138.7	-138.7	0.40 (1)	3.60
H- I	-4930 / 0	-138.7	-138.7	0.40 (1)	3.60
I- J	-4410 / 0	-138.7	-138.7	0.28 (1)	3.91
J- K	-3427 / 0	-138.7	-138.7	0.25 (1)	4.38
K- L	-1887 / 0	-138.7	-138.7	0.08 (1)	5.75
L- M	-2195 / 0	-70.5	-70.5	0.14 (1)	4.47
M- N	0 / 40	-70.5	-70.5	0.11 (1)	10.00
AA- B	-2993 / 0	0.0	0.0	0.22 (1)	6.76
O- M	-2993 / 0	0.0	0.0	0.22 (1)	6.76
AA- Z	0 / 0	-34.5	-34.5	0.20 (1)	10.00
Z- Y	0 / 1302	-34.5	-34.5	0.37 (1)	10.00
Y- X	0 / 1887	-34.5	-34.5	0.32 (1)	10.00
X- W	0 / 3427	-34.5	-34.5	0.49 (1)	10.00
W- V	0 / 3427	-34.5	-34.5	0.49 (1)	10.00
V- U	0 / 4410	-34.5	-34.5	0.66 (1)	10.00
U- T	0 / 4410	-34.5	-34.5	0.66 (1)	10.00
T- S	0 / 3427	-34.5	-34.5	0.49 (1)	10.00
S- R	0 / 3427	-34.5	-34.5	0.49 (1)	10.00
R- Q	0 / 1887	-34.5	-34.5	0.32 (1)	10.00
Q- P	0 / 1302	-34.5	-34.5	0.37 (1)	10.00
P- O	0 / 0	-34.5	-34.5	0.20 (1)	10.00

WEBS

MEMB. FR-TO	MAX. FACTORED FORCE (LBS)	MAX CSI (LC)
Z- C	-617 / 0	0.23 (1)
C- Y	0 / 2114	0.52 (1)
Y- D	-2229 / 0	0.49 (1)
D- X	0 / 2504	0.62 (1)
X- E	-1822 / 0	0.69 (1)
E- V	0 / 1597	0.40 (1)
V- F	-1105 / 0	0.42 (1)
F- U	0 / 707	0.17 (1)
U- G	-770 / 0	0.29 (1)
U- I	0 / 707	0.17 (1)
T- I	-1105 / 0	0.42 (1)
T- J	0 / 1597	0.40 (1)
R- J	-1822 / 0	0.69 (1)
R- K	0 / 2504	0.62 (1)
Q- K	-2229 / 0	0.85 (1)
Q- L	0 / 2114	0.52 (1)
P- L	-617 / 0	0.23 (1)
B- Z	0 / 1686	0.42 (1)
P- M	0 / 1686	0.42 (1)

FACTORED CONCENTRATED LOADS (LBS)

JT	LOC.	LC1	MAX-	MAX+	FACE	DIR.	TYPE
C	2-2-11	-114	-114	—	FRONT	VERT	TOTAL
L	30-9-5	-114	-114	—	FRONT	VERT	TOTAL

DESIGN CRITERIA

SPECIFIED LOADS:

TOP CH.	LL	=	21.0	PSF
	DL	=	3.0	PSF
BOT CH.	LL	=	0.0	PSF
	DL	=	7.0	PSF
TOTAL LOAD		=	31.0	PSF

SPACING = 24.0 IN. C/C

LOADING IN FLAT SECTION BASED ON A SLOPE OF 2.00/12 MINIMUM

GIRDER TYPE: CPrimeHip
SIDE SETBACK = 2-2-11
END SETBACK = 5-10-8
END WALL WIDTH = 0-0
CORNER FRAMING TYPE: CONVENTIONAL
END JACK TYPE: CONVENTIONAL
APPLIED TO FRONT SIDE
- ADDT'L LOADS BASED ON 55 % OF GSL.

THIS TRUSS IS DESIGNED FOR RESIDENTIAL OR SMALL BUILDING REQUIREMENTS OF PART 9, NBCC 2010

THIS DESIGN COMPLIES WITH:
- PART 9 OF OBC 2012 , BCBC 2012 , ABC 2014
- CSA 086-09
- TPIC 2011

(55 % OF 23.0 P.S.F. G.S.L. PLUS
8.4 P.S.F. RAIN LOAD EQUALS
21.0 P.S.F. SPECIFIED ROOF LIVE LOAD

ALLOWABLE DEFL.(LL)= L/360 (1.10")
CALCULATED VERT. DEFL.(LL) = L/ 999 (0.21")
ALLOWABLE DEFL.(TL)= L/360 (1.10")
CALCULATED VERT. DEFL.(TL) = L/ 999 (0.38")

CSI: TC=0.40 (G-I:1) , BC=0.66 (U-V:1) , WB=0.65 (K-Q:1) , SSI=0.26 (F-G:1)

DOL LUMBER=1.00 NAIL=1.00 LS BEND=1.00 COMP=1.00 SHEAR=1.00 TENS= 1.00

COMPANION LIVE LOAD FACTOR = 0.60

AUTOSOLVE HEELS OFF

TRUSS PLATE MANUFACTURER IS NOT RESPONSIBLE FOR QUALITY CONTROL IN THE TRUSS MANUFACTURING PLANT .

NAIL VALUES

PLATE	GRIP(DRY) (PSI) MAX	MIN	SHEAR (PLI) MAX	MIN	SECTION (PLI) MAX	MIN
MT20	618	354	1667	822	2284	1656

PLATE PLACEMENT TOL. = 0.250 Inches

PLATE ROTATION TOL. = 5.0 Deg.

JSI GRIP= 0.79 (F) (INPUT = 0.90)
JSI METAL= 0.70 (S) (INPUT = 1.00)

A-H073864

CONTINUED ON PAGE 2

PLATES (table is in inches)

JT	TYPE	PLATES	W	LEN	Y	X
AA	BMV1+t	MT20	6.0	9.0	5.50	

Edge - INDICATES REFERENCE CORNER OF PLATE TOUCHES EDGE OF CHORD.

HANGERS NOTES

1) SPECIAL HANGER(S) OR CONNECTION(S) REQUIRED TO SUPPORT CONCENTRATED LOAD(S) 114.2 lbs FACTORED DOWN AT 30-9-5, AND 114.2 lbs FACTORED DOWN AT 2-2-11 ON TOP CHORD. DESIGN FOR UNSPECIFIED CONNECTION(S) IS DELEGATED TO THE BUILDING DESIGNER.

NOTES- (1)

1) Lateral brace(s) shown shall be 1x4 for Part 9 design as per OBC 9.23.13.11, and no less than 2x4 for Part 4 design.

LICENSED PROFESSIONAL ENGINEER
07.17.2015
R. TURENNE
100157040
PROVINCE OF ONTARIO

A-10738 64(2)

JOB NAME	TRUSS NAME	QUANTITY	PLY	JOB DESC.	DRWG NO.
253638	H04T	1	1	TRUSS DESC.	

Alpa Roof Truss, Maple

Version 7.620 S Apr 16 2015 MiTek Industries, Inc. Fri Jul 17 14:25:24 2015 Page 1
ID:AyrJx9Y?fa2EXF7DRQxSq4zMEz1-hAcetRkDDWpCtIbOqUpASCPsyOZe9FuN4Jw6iRyxBr
Scale = 1:61.4

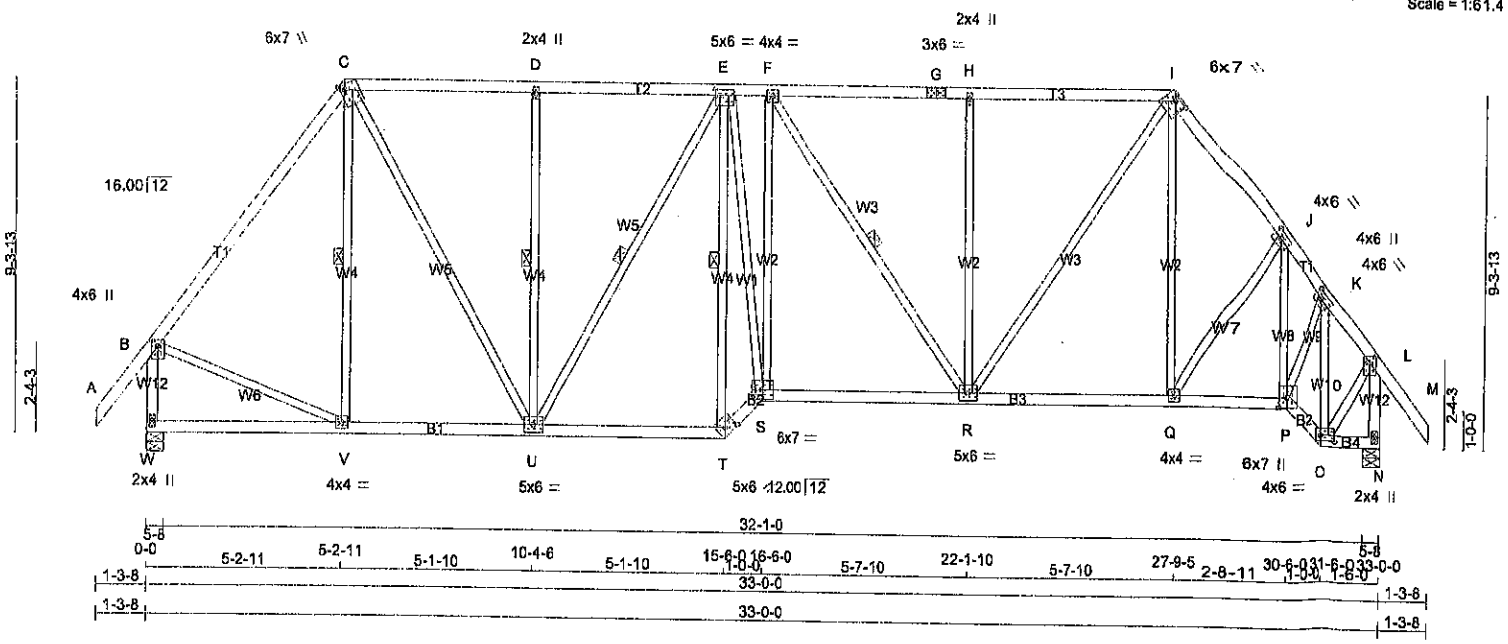

TOTAL WEIGHT = 192 lb
[M]

LUMBER
N. L. G. A. RULES

CHORDS	SIZE		LUMBER	DESCR.
A - C	2x4	DRY	No.2	SPF
C - G	2x4	DRY	No.2	SPF
G - I	2x4	DRY	No.2	SPF
I - M	2x4	DRY	No.2	SPF
W - B	2x4	DRY	No.2	SPF
N - L	2x4	DRY	No.2	SPF
W - T	2x4	DRY	No.2	SPF
T - S	2x4	DRY	No.2	SPF
S - P	2x4	DRY	No.2	SPF
P - O	2x4	DRY	No.2	SPF
O - N	2x4	DRY	No.2	SPF
ALL WEBS EXCEPT	2x3	DRY	No.2	SPF

DRY: SEASONED LUMBER.

PLATES (table is in inches)

JT	TYPE	PLATES	W	LEN	Y	X
B	TMVW+p	MT20	4.0	6.0	2.00	2.00
C	TTWW+m	MT20	6.0	7.0	Edge	1.50
D	TMW+w	MT20	2.0	4.0		
E	TMWWW-t	MT20	6.0	6.0	1.75	1.50
F	TMWW-t	MT20	4.0	4.0		
G	TS-t	MT20	3.0	6.0		
H	TMW+w	MT20	2.0	4.0		
I	TTWW-h	MT20	6.0	7.0	1.50	3.75
J	TMWW-t	MT20	4.0	6.0	2.00	2.50
K	TMWW-t	MT20	4.0	6.0	2.00	2.50
L	TMVW+p	MT20	4.0	6.0	2.00	2.00
N	BMV1+p	MT20	2.0	4.0		
O	BBWW-l	MT20	4.0	6.0	1.75	4.25
P	BBWW+p	MT20	6.0	7.0	3.25	2.75
Q	BMWW-t	MT20	4.0	4.0		
R	BMWWW-t	MT20	6.0	6.0		
S	BBWW-l	MT20	6.0	7.0		
T	BBW-h	MT20	5.0	6.0	2.25	3.50
U	BMWWW-t	MT20	5.0	6.0		
V	BMWW-t	MT20	4.0	4.0		
W	BMV1+p	MT20	2.0	4.0		

LICENSED PROFESSIONAL ENGINEER
07/17/2015
R. TURENNE
100107640
PROVINCE OF ONTARIO

DIMENSIONS, SUPPORTS AND LOADINGS SPECIFIED BY FABRICATOR TO BE VERIFIED BY BUILDING DESIGNER

BEARINGS

JT	FACTORED GROSS REACTION VERT	HORZ	MAXIMUM FACTORED GROSS REACTION DOWN	HORZ	UPLIFT	INPUT BRG IN-SX	REQRD BRG IN-SX
W	1548	0	1548	0	0	5-8	1-11
N	1553	0	1553	0	0	5-8	1-11

UNFACTORED REACTIONS

JT	1ST LCASE COMBINED	MAX./MIN. COMPONENT REACTIONS SNOW	LIVE	PERM.LIVE	WIND	DEAD	SOIL
W	1099	750 / 0	0 / 0	0 / 0	0 / 0	336 / 0	0 / 0
N	1091	753 / 0	0 / 0	0 / 0	0 / 0	339 / 0	0 / 0

BEARING MATERIAL TO BE SPF NO.2 OR BETTER AT JOINT(S) W, N

BRACING
TOP CHORD TO BE SHEATHED OR MAX. PURLIN SPACING = 6.10FT.
MAX. UNBRACED BOTTOM CHORD LENGTH = 10.00FT. OR RIGID CEILING DIRECTLY APPLIED.

1 LATERAL BRACE(S) REQUIRED AT 1/ 2 LENGTH OF C-V, D-U, E-U, E-T, F-R.
END VERTICAL(S) MUST BE SHEATHED OR HAVE BRACES AS INDICATED IN THE MAX. UNBRACED LENGTH COLUMN OF THE TABLE BELOW

LOADING
TOTAL LOAD CASES: (4)

CHORDS

MEMB. FR-TO	MAX. FACTORED FORCE (LBS)	FACTORED VERT. LOAD (PLF) FROM	TO	LC1	MAX CSI (LC)	MAX UNBRAC LENGTH
A- B	0 / 40	-70.5	-70.5	0.10 (1)	10.00	
B- C	-1202 / 0	-70.5	-70.5	0.45 (1)	5.35	
C- D	-1164 / 0	-70.5	-70.5	0.29 (1)	5.55	
D- E	-1164 / 0	-70.5	-70.5	0.29 (1)	5.55	
E- F	-1502 / 0	-70.5	-70.5	0.20 (1)	5.14	
F- G	-1349 / 0	-70.5	-70.5	0.39 (1)	5.10	
G- H	-1349 / 0	-70.5	-70.5	0.39 (1)	5.10	
H- I	-1349 / 0	-70.5	-70.5	0.40 (1)	5.10	
I- J	-1351 / 0	-70.5	-70.5	0.09 (1)	5.51	
J- K	-1255 / 0	-70.5	-70.5	0.06 (1)	5.68	
K- L	-896 / 0	-70.5	-70.5	0.10 (1)	6.25	
L- M	0 / 40	-70.5	-70.5	0.10 (1)	10.00	
W- B	-1511 / 0	0.0	0.0	0.19 (1)	6.88	
N- L	-1539 / 0	0.0	0.0	0.20 (1)	6.63	
W- V	0 / 0	-17.5	-17.5	0.11 (4)	10.00	
V- U	0 / 716	-17.5	-17.5	0.19 (1)	10.00	
U- T	0 / 1335	-17.5	-17.5	0.27 (1)	10.00	
T- S	0 / 1867	-17.5	-17.5	0.30 (1)	10.00	
S- R	0 / 1501	-17.5	-17.5	0.31 (1)	10.00	
R- Q	0 / 798	-17.5	-17.5	0.20 (4)	10.00	
Q- P	0 / 793	-17.5	-17.5	0.17 (1)	10.00	
P- O	0 / 671	-17.5	-17.5	0.11 (1)	10.00	
O- N	0 / 0	-17.5	-17.5	0.01 (4)	10.00	

WEBS

MEMB. FR-TO	MAX. FACTORED FORCE (LBS)	MAX CSI (LC)
V- C	-159 / 28	0.09 (1)
C- U	0 / 903	0.20 (1)
U- D	-396 / 0	0.23 (1)
U- E	-350 / 0	0.27 (1)
T- E	-1264 / 0	0.72 (1)
E- S	0 / 1329	0.30 (1)
S- F	0 / 61	0.02 (4)
F- R	-268 / 0	0.18 (1)
R- H	-468 / 0	0.62 (1)
R- I	0 / 956	0.22 (1)
Q- I	0 / 73	0.03 (4)
Q- J	0 / 26	0.01 (1)
P- J	-262 / 0	0.09 (1)
P- K	0 / 824	0.19 (1)
O- K	-1102 / 0	0.29 (1)
B- V	0 / 765	0.17 (1)
O- L	0 / 822	0.19 (1)

DESIGN CRITERIA

SPECIFIED LOADS:

TOP CH.	LL	=	21.0	PSF
	DL	=	3.0	PSF
BOT CH.	LL	=	0.0	PSF
	DL	=	7.0	PSF
TOTAL LOAD		=	31.0	PSF

SPACING = 24.0 IN. C/C

LOADING IN FLAT SECTION BASED ON A SLOPE OF 2.00/12 MINIMUM

THIS TRUSS IS DESIGNED FOR RESIDENTIAL OR SMALL BUILDING REQUIREMENTS OF PART 9, NBCC 2010

THIS DESIGN COMPLIES WITH:
- PART 9 OF OBC 2012 , BCBC 2012 , ABC 2014
- CSA 086-09
- TPIC 2011

DESIGN ASSUMPTIONS
-OVERHANG NOT TO BE ALTERED OR CUT OFF.

(65 % OF 23.0 P.S.F. G.S.L. PLUS
8.4 P.S.F. RAIN LOAD EQUALS
21.0 P.S.F. SPECIFIED ROOF LIVE LOAD

ALLOWABLE DEFL.(LL)= L/360 (1.10")
CALCULATED VERT. DEFL.(LL) = L/ 999 (0.09")
ALLOWABLE DEFL.(TL)= L/360 (1.10")
CALCULATED VERT. DEFL.(TL) = L/ 999 (0.18")

CSI: TC=0.45 (B-C:1) , BC=0.31 (R-S:1) ,
WB=0.72 (E-T:1) , SSI=0.19 (H-I:1)

DOL LUMBER=1.00 NAIL=1.00 LS BEND=1.10
COMP=1.10 SHEAR=1.10 TENS= 1.10

COMPANION LIVE LOAD FACTOR = 0.60

TRUSS PLATE MANUFACTURER IS NOT RESPONSIBLE FOR QUALITY CONTROL IN THE TRUSS MANUFACTURING PLANT .

NAIL VALUES

PLATE	GRIP(DRY) (PSI) MAX	MIN	SHEAR (PLI) MAX	MIN	SECTION (PLI) MAX	MIN
MT20	616	354	1667	822	2284	1656

PLATE PLACEMENT TOL. = 0.250 Inches

PLATE ROTATION TOL. = 5.0 Deg.

JSI GRIP= 0.90 (T) (INPUT = 0.80)
JSI METAL= 0.35 (E) (INPUT = 1.00)

A-15073863

JOB NAME	TRUSS NAME	QUANTITY	PLY	JOB DESC.	DRWG NO.
253638	H01T	1	1	TRUSS DESC.	

Alpa Roof Truss, Maple

ID:AyrJx9Y?fa2EXF7DRQxSq4zMEz1-Dz2Gg5jbSDhLGb0qGmlxv_shFc23Q!5ErfBYA?yx8rc
Scale = 1:61.4

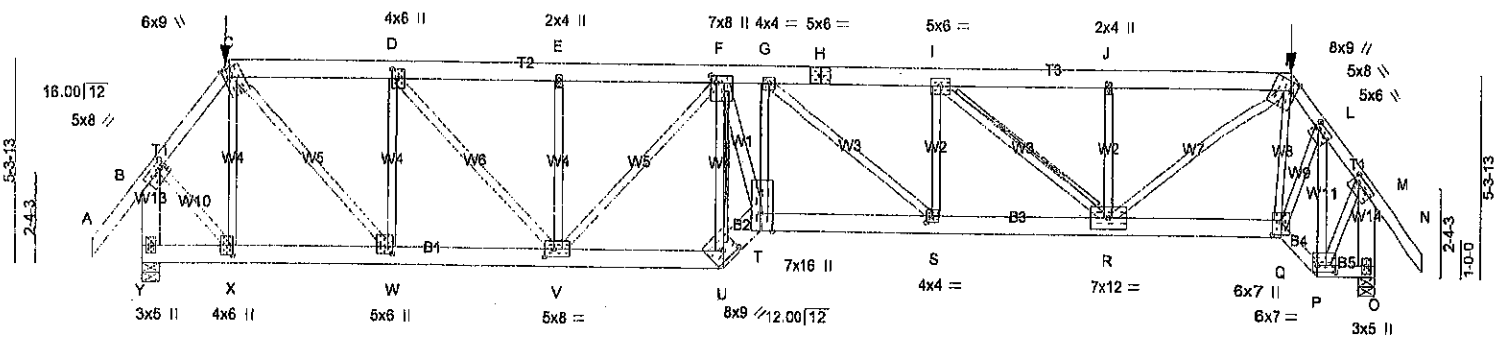

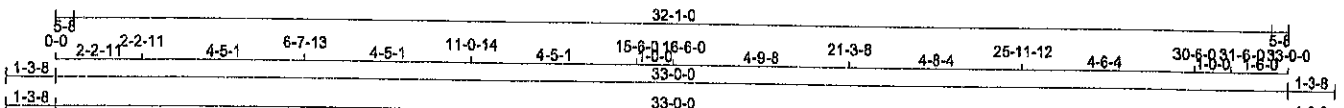

TOTAL WEIGHT = 201 lb
[M]

LUMBER
N. L. G. A. RULES

CHORDS	SIZE		LUMBER	DESCR.
A - C	2x4	DRY	No.2	SPF
C - H	2x6	DRY	No.2	SPF
H - K	2x6	DRY	No.2	SPF
K - N	2x4	DRY	No.2	SPF
Y - B	2x6	DRY	No.2	SPF
O - M	2x6	DRY	No.2	SPF
Y - U	2x6	DRY	No.2	SPF
U - T	2x8	DRY	No.2	SPF
T - Q	2x6	DRY	No.2	SPF
Q - P	2x4	DRY	No.2	SPF
P - O	2x4	DRY	No.2	SPF
ALL WEBS EXCEPT	2x3	DRY	No.2	SPF
F - T	2x4	DRY	No.2	SPF

DRY: SEASONED LUMBER.

PLATES (table is in inches)

JT	TYPE	PLATES	W	LEN	Y	X
B	TMVW-t	MT20	5.0	8.0	2.00	2.00
C	TTWW+m	MT20	6.0	9.0	2.75	1.75
D	TMWW+t	MT20	4.0	6.0	3.00	1.50
E	TMW+w	MT20	2.0	4.0		
F	TMWWW+t	MT20	7.0	8.0	2.25	1.75
G	TMWW-t	MT20	4.0	4.0		
H	TS-t	MT20	5.0	6.0		
I	TMWW-t	MT20	5.0	6.0		
J	TMW+w	MT20	2.0	4.0		
K	TTWW+m	MT20	8.0	9.0	2.75	1.75
L	TMWW-t	MT20	5.0	6.0	2.00	1.50
M	TMVW-t	MT20	5.0	8.0	2.00	2.00
O	BMV1+p	MT20	3.0	5.0		
P	BBWW-t	MT20	6.0	7.0	2.00	5.50
Q	BBWW+p	MT20	6.0	7.0	4.00	3.00
R	BMWWW-t	MT20	7.0	12.0		
S	BMWW-t	MT20	4.0	4.0	2.00	1.75
T	BBWW+p	MT20	7.0	16.0	Edge	4.00
U	BBW-h	MT20	8.0	9.0	2.75	4.50
V	BMWWW-t	MT20	5.0	8.0	2.50	3.00
W	BMWW+t	MT20	5.0	6.0	2.25	1.50

LICENSED PROFESSIONAL ENGINEER
27.7.2015
R. TURENNE
100157040
PROVINCE OF ONTARIO

DIMENSIONS, SUPPORTS AND LOADINGS SPECIFIED BY FABRICATOR TO BE VERIFIED BY BUILDING DESIGNER

BEARINGS

JT	FACTORED GROSS REACTION VERT	HORZ	MAXIMUM FACTORED GROSS REACTION DOWN	HORZ	UPLIFT	INPUT BRG IN-SX	REQRD BRG IN-SX
Y	2919	0	2919	0	0	5-8	4-0
O	2907	0	2907	0	0	5-8	3-15

UNFACTORED REACTIONS

JT	1ST LCASE COMBINED	MAX./MIN. COMPONENT REACTIONS SNOW	LIVE	PERM.LIVE	WIND	DEAD	SOIL
Y	2055	1400 / 0	0 / 0	0 / 0	0 / 0	655 / 0	0 / 0
O	2047	1393 / 0	0 / 0	0 / 0	0 / 0	654 / 0	0 / 0

BEARING MATERIAL TO BE SPF NO.2 OR BETTER AT JOINT(S) Y, O

BRACING
TOP CHORD TO BE SHEATHED OR MAX. PURLIN SPACING = 3.19FT.
MAX. UNBRACED BOTTOM CHORD LENGTH = 10.00FT. OR RIGID CEILING DIRECTLY APPLIED.

2x4 DRY SPF No.2 I-BRACE REQUIRED AT F-U
2x4 DRY SPF No.2 T-BRACE REQUIRED AT I-R
FASTEN T AND I-BRACES TO NARROW EDGE OF WEB WITH ONE ROW PER PLY OF 3" COMMON WIRE NAILS @ 6" O.C. WITH 3" MINIMUM END DISTANCE. BRACE MUST COVER 90% OF WEB LENGTH.
END VERTICAL(S) MUST BE SHEATHED OR HAVE BRACES AS INDICATED IN THE MAX. UNBRACED LENGTH COLUMN OF THE TABLE BELOW

LOADING
TOTAL LOAD CASES: (4)

CHORDS

MEMB. FR-TO	MAX. FACTORED FORCE (LBS)	FACTORED VERT. LOAD (PLF) FROM	TO	LC1	MAX CSI (LC)	MAX UNBRAC LENGTH
A- B	0 / 40	-70.5	-70.5	0.11 (1)	10.00	
B- C	-2141 / 0	-70.5	-70.5	0.13 (1)	4.52	
C- D	-3190 / 0	-138.7	-138.7	0.25 (1)	4.50	
D- E	-4357 / 0	-138.7	-138.7	0.30 (1)	3.91	
E- F	-4357 / 0	-138.7	-138.7	0.27 (1)	3.94	
F- G	-6236 / 0	-138.7	-138.7	0.43 (1)	3.19	
G- H	-5678 / 0	-70.5	-70.5	0.45 (1)	3.32	
H- I	-5678 / 0	-70.5	-70.5	0.45 (1)	3.32	
I- J	-4151 / 0	-70.5	-70.5	0.23 (1)	4.07	
J- K	-4151 / 0	-70.5	-70.5	0.26 (1)	4.04	
K- L	-2592 / 0	-70.5	-70.5	0.14 (1)	4.15	
L- M	-1751 / 0	-70.5	-70.5	0.14 (1)	4.88	
M- N	0 / 40	-70.5	-70.5	0.11 (1)	10.00	
Y- B	-2924 / 0	0.0	0.0	0.26 (1)	6.10	
O- M	-2881 / 0	0.0	0.0	0.27 (1)	6.13	
Y- X	0 / 0	-34.5	-34.5	0.08 (1)	10.00	
X- W	0 / 1264	-34.5	-34.5	0.24 (1)	10.00	
W- V	0 / 3191	-34.5	-34.5	0.50 (1)	10.00	
V- U	0 / 4983	-34.5	-34.5	0.74 (1)	10.00	
U- T	0 / 6901	-34.5	-34.5	0.74 (1)	10.00	
T- S	0 / 6220	-102.7	-102.7	0.98 (1)	10.00	
S- R	0 / 5678	-102.7	-102.7	0.84 (1)	10.00	
R- Q	0 / 1547	-102.7	-102.7	0.34 (1)	10.00	
Q- P	0 / 1374	-34.5	-34.5	0.26 (1)	10.00	
P- O	0 / 0	-34.5	-34.5	0.02 (4)	10.00	

WEBS

MEMB. FR-TO	MAX. FACTORED FORCE (LBS)	MAX CSI (LC)
X- C	-854 / 0	0.32 (1)
C- W	0 / 2859	0.71 (1)
W- D	-1956 / 0	0.74 (1)
D- V	0 / 1732	0.43 (1)
V- E	-581 / 0	0.22 (1)
V- F	-940 / 0	0.69 (1)
U- F	-4657 / 0	0.95 (1)
F- T	0 / 4816	0.85 (1)
T- G	0 / 821	0.15 (1)
G- S	-701 / 0	0.44 (1)
S- I	0 / 833	0.21 (1)
I- R	-1979 / 0	0.57 (1)
R- J	-327 / 0	0.08 (1)
Q- K	-336 / 0	0.09 (1)
Q- L	0 / 1660	0.41 (1)
P- L	-2253 / 0	0.62 (1)
B- X	0 / 1647	0.41 (1)
P- M	0 / 1652	0.41 (1)
R- K	0 / 3341	0.83 (1)

FACTORED CONCENTRATED LOADS (LBS)

JT	LOC.	LC1	MAX-	MAX+	FACE	DIR.	TYPE
C	2-2-11	-114	-114	---	FRONT	VERT	TOTAL
K	30-9-5	-114	-114	---	FRONT	VERT	TOTAL

DESIGN CRITERIA

SPECIFIED LOADS:

TOP CH.	LL	=	21.0	PSF
	DL	=	3.0	PSF
BOT CH.	LL	=	0.0	PSF
	DL	=	7.0	PSF
TOTAL LOAD		=	31.0	PSF

SPACING = 24.0 IN. C/C

LOADING IN FLAT SECTION BASED ON A SLOPE OF 2.00/12 MINIMUM

GIRDER TYPE: CPrimeHip
SIDE SETBACK = 2-2-11
END SETBACK = 5-10-8
END WALL WIDTH = 0-0
CORNER FRAMING TYPE: CONVENTIONAL
END JACK TYPE: CONVENTIONAL
APPLIED TO FRONT SIDE
- ADDT'L LOADS BASED ON 55 % OF GSL.
LOADS APPLIED TO FIRST 16-6-0 OF SPAN MEASURED FROM THE LEFT.

GIRDER TYPE: CStdGirder
START DISTANCE = 16-6-0
START SPAN CARRIED = 5-10-8
END DISTANCE = 30-6-0
END SPAN CARRIED = 5-10-8
END WALL WIDTH = 0-0
APPLIED TO FRONT SIDE OF BOTTOM CHORD.
- ADDT'L LOADS BASED ON 55 % OF GSL.

GIRDER TYPE: CPrimeHip
SIDE SETBACK = 2-2-11
END SETBACK = 5-10-8
END WALL WIDTH = 0-0
CORNER FRAMING TYPE: CONVENTIONAL
END JACK TYPE: CONVENTIONAL
APPLIED TO FRONT SIDE
- ADDT'L LOADS BASED ON 55 % OF GSL.
LOADS APPLIED TO FIRST 2-6-0 OF SPAN MEASURED FROM THE RIGHT.

THIS TRUSS IS DESIGNED FOR RESIDENTIAL OR SMALL BUILDING REQUIREMENTS OF PART 9, NBCC 2010

THIS DESIGN COMPLIES WITH:
- PART 9 OF OBC 2012 , BCBC 2012 , ABC 2014
- CSA 086-09
- TPIC 2011

DESIGN ASSUMPTIONS
-OVERHANG NOT TO BE ALTERED OR CUT OFF.

(55 % OF 23.0 P.S.F. G.S.L. PLUS 8.4 P.S.F. RAIN LOAD EQUALS 21.0 P.S.F. SPECIFIED ROOF LIVE LOAD

ALLOWABLE DEFL.(LL)= L/360 (1.10")
CALCULATED VERT. DEFL.(LL) = L/ 999 (0.32")
ALLOWABLE DEFL.(TL)= L/360 (1.10")
CALCULATED VERT. DEFL.(TL) = L/ 689 (0.57")

CSI: TC=0.45 (G-I:1) , BC=0.98 (S-T:1) , WB=0.95 (F-U:1) , SSI=0.28 (F-G:1)

A-1507386

CONTINUED ON PAGE 2

253636	J01C	8	1	TRUSS DESC.	DRWG NO.

Alpa Roof Truss, Maple

Version 7.620 S Apr 16 2015 MiTek Industries, Inc. Fri Jul 17 13:44:53 2015 Page 1
ID:AyrJx9Y?fa2EXF7DRQxSq4zMEz1-MUDdfCJLjbX7k9FowQi5QYDW_3wd3xJY3bYzuryx9R
Scale: 3/8"=1'

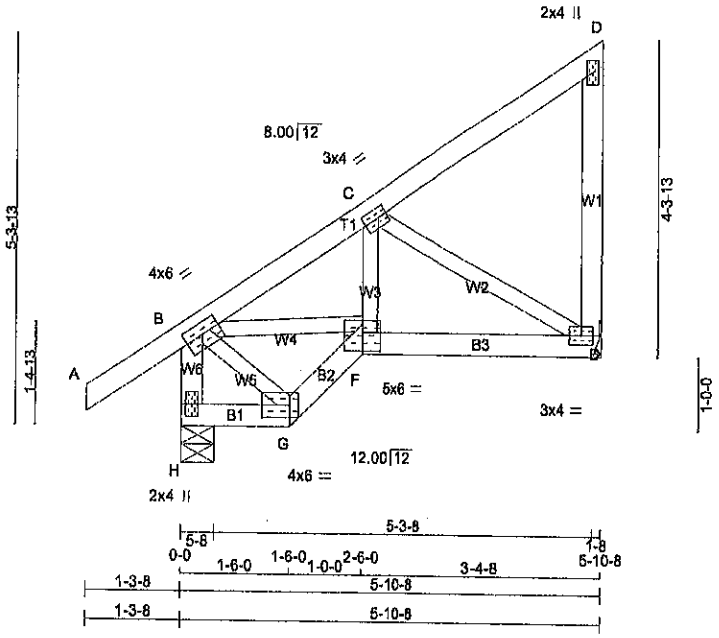

TOTAL WEIGHT = 8 X 30 = 238 lb
[M]

LUMBER
N. L. G. A. RULES

CHORDS	SIZE		LUMBER	DESCR.
H - B	2x4	DRY	No.2	SPF
A - D	2x4	DRY	No.2	SPF
E - D	2x4	DRY	No.2	SPF
H - G	2x4	DRY	No.2	SPF
G - F	2x4	DRY	No.2	SPF
F - E	2x4	DRY	No.2	SPF
ALL WEBS	2x3	DRY	No.2	SPF

DRY: SEASONED LUMBER.

PLATES (table is in inches)

JT	TYPE	PLATES	W	LEN	Y	X
B	TMVWW-t	MT20	4.0	6.0	1.75	3.00
C	TMWW-t	MT20	3.0	4.0	1.50	1.50
D	TMV+p	MT20	2.0	4.0		
E	BMVW1-t	MT20	3.0	4.0		
F	BBWW-l	MT20	5.0	6.0	3.00	3.00
G	BBW-l	MT20	4.0	6.0	2.00	4.50
H	BMV1+p	MT20	2.0	4.0		

NOTES- (1)
1) Lateral brace(s) shown shall be 1x4 for Part 9 design as per OBC 9.23.13.11, and no less than 2x4 for Part 4 design.

DIMENSIONS, SUPPORTS AND LOADINGS SPECIFIED BY FABRICATOR TO BE VERIFIED BY BUILDING DESIGNER

BEARINGS

JT	FACTORED GROSS REACTION VERT	HORZ	MAXIMUM FACTORED GROSS REACTION DOWN	HORZ	UPLIFT	INPUT BRG IN-SX	REQRD BRG IN-SX
H	355	0	355	0	0	5-8	1-8
E	258	0	258	0	0	HANGER BY OTHERS	
						MIN. SEAT SIZE: 1-8	

UNFACTORED REACTIONS

JT	1ST LCASE COMBINED	MAX./MIN. COMPONENT REACTIONS SNOW	LIVE	PERM.LIVE	WIND	DEAD	SOIL
H	248	181 / 0	0 / 0	0 / 0	0 / 0	67 / 0	0 / 0
E	182	123 / 0	0 / 0	0 / 0	0 / 0	59 / 0	0 / 0

BEARING MATERIAL TO BE SPF NO.2 OR BETTER AT JOINT(S) H

BRACING
TOP CHORD TO BE SHEATHED OR MAX. PURLIN SPACING = 6.25FT.
MAX. UNBRACED BOTTOM CHORD LENGTH = 10.00FT. OR RIGID CEILING DIRECTLY APPLIED.

LOADING
TOTAL LOAD CASES: (4)

CHORDS

MEMB. FR-TO	MAX. FACTORED FORCE (LBS)	FACTORED VERT. LOAD (PLF) FROM	TO	LC1 MAX CSI (LC)	MAX UNBRAC LENGTH
H- B	-342 / 0	0.0	0.0	0.04 (1)	7.81
A- B	0 / 27	-70.5	-70.5	0.09 (1)	10.00
B- C	-287 / 0	-70.5	-70.5	0.10 (1)	6.25
C- D	-12 / 0	-70.5	-70.5	0.10 (1)	6.25
E- D	-93 / 0	0.0	0.0	0.03 (1)	7.81
H- G	0 / 0	-17.5	-17.5	0.01 (4)	10.00
G- F	0 / 20	-17.5	-17.5	0.01 (4)	10.00
F- E	0 / 248	-17.5	-17.5	0.08 (4)	10.00

WEBS

MEMB. FR-TO	MAX. FACTORED FORCE (LBS)	MAX CSI (LC)
B- G	0 / 18	0.01 (4)
B- F	0 / 238	0.05 (1)
F- C	0 / 57	0.02 (4)
C- E	-264 / 0	0.07 (1)

DESIGN CRITERIA

SPECIFIED LOADS:

TOP CH.	LL	=	21.0	PSF
	DL	=	3.0	PSF
BOT CH.	LL	=	0.0	PSF
	DL	=	7.0	PSF
TOTAL LOAD		=	31.0	PSF

SPACING = 24.0 IN. C/C

THIS TRUSS IS DESIGNED FOR RESIDENTIAL OR SMALL BUILDING REQUIREMENTS OF PART 9, NBCC 2010

THIS DESIGN COMPLIES WITH:
- PART 9 OF OBC 2012 , BCBC 2012 , ABC 2014
- CSA 086-09
- TPIC 2011

(55 % OF 23.0 P.S.F. G.S.L. PLUS
8.4 P.S.F. RAIN LOAD EQUALS
21.0 P.S.F. SPECIFIED ROOF LIVE LOAD

ALLOWABLE DEFL.(LL)= L/360 (0.20")
CALCULATED VERT. DEFL.(LL) = L/ 999 (0.00")
ALLOWABLE DEFL.(TL)= L/360 (0.20")
CALCULATED VERT. DEFL.(TL) = L/ 999 (0.01")

CSI: TC=0.10 (B-C:1) , BC=0.08 (E-F:4) , WB=0.07 (C-E:1) , SSI=0.09 (C-D:1)

DOL LUMBER=1.00 NAIL=1.00 LS BEND=1.10 COMP=1.10 SHEAR=1.10 TENS= 1.10

COMPANION LIVE LOAD FACTOR = 0.50

TRUSS PLATE MANUFACTURER IS NOT RESPONSIBLE FOR QUALITY CONTROL IN THE TRUSS MANUFACTURING PLANT .

NAIL VALUES

PLATE	GRIP(DRY) (PSI) MAX	MIN	SHEAR (PLI) MAX	MIN	SECTION (PLI) MAX	MIN
MT20	618	354	1667	822	2284	1666

PLATE PLACEMENT TOL. = 0.250 Inches

PLATE ROTATION TOL. = 5.0 Deg.

JSI GRIP= 0.41 (B) (INPUT = 0.90)
JSI METAL= 0.10 (B) (INPUT = 1.00)

LICENSED PROFESSIONAL ENGINEER
07.17.2015
R. TURENNE
100157040
PROVINCE OF ONTARIO

A-420738 61

JOB NAME	TRUSS NAME	QUANTITY	PLY	JOB DESC.	DRWG NO.
253636	H05T	1	1	TRUSS DESC.	

Alpa Roof Truss, Maple

Version 7.820 S Apr 16 2016 MiTek Industries, Inc. Fri Jul 17 14:07:44 2015 Page 1
ID:AyrJx9Y?fa2EXF7DRQxSq4zMEz1-jEZwP?vKrrGcjsYI ksobUgVe_jnPoniLKP90Wtyx96D
Scale = 1:66.4

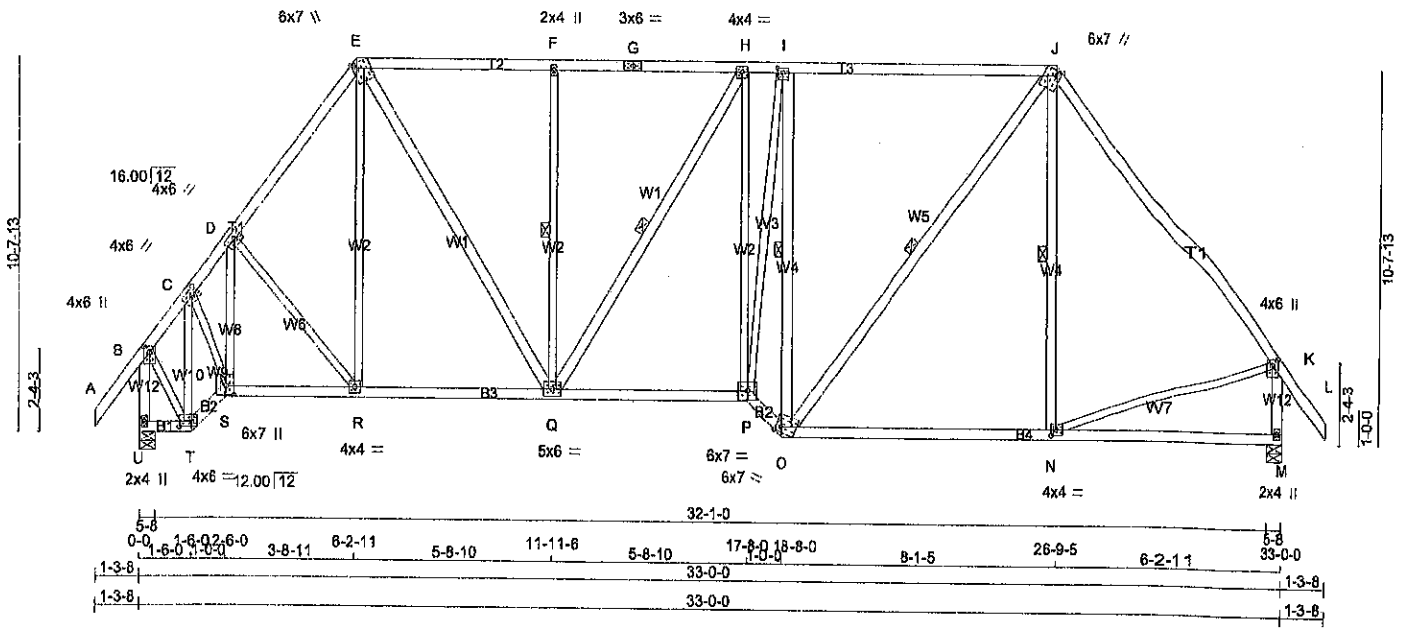

TOTAL WEIGHT = 208 lb

[M]

LUMBER

N. L. G. A. RULES

CHORDS	SIZE		LUMBER	DESCR.
A - E	2x4	DRY	2100F 1.8E	SPF
E - G	2x4	DRY	No.2	SPF
G - J	2x4	DRY	No.2	SPF
J - L	2x4	DRY	2100F 1.8E	SPF
U - B	2x4	DRY	No.2	SPF
M - K	2x4	DRY	No.2	SPF
U - T	2x4	DRY	No.2	SPF
T - S	2x4	DRY	No.2	SPF
S - P	2x4	DRY	No.2	SPF
P - O	2x4	DRY	No.2	SPF
O - M	2x4	DRY	No.2	SPF
ALL WEBS	2x3	DRY	No.2	SPF
EXCEPT				
E - Q	2x4	DRY	No.2	SPF
Q - H	2x4	DRY	No.2	SPF
O - I	2x4	DRY	No.2	SPF
O - J	2x4	DRY	No.2	SPF
N - J	2x4	DRY	No.2	SPF

DRY: SEASONED LUMBER.

PLATES (table is in inches)

JT	TYPE	PLATES	W	LEN	Y	X
B	TMVW+p	MT20	4.0	6.0	2.00	2.00
C	TMWW-t	MT20	4.0	6.0	2.00	2.50
D	TMWW-t	MT20	4.0	6.0	2.00	2.50
E	TTWW+m	MT20	6.0	7.0	Edge	1.50
F	TMW+w	MT20	2.0	4.0		
G	TS-t	MT20	3.0	6.0		
H	TMWW-t	MT20	4.0	4.0		
I	TMWW-t	MT20	4.0	4.0	1.50	2.00
J	TTWW+m	MT20	6.0	7.0	Edge	1.50
K	TMVW+p	MT20	4.0	6.0	2.00	2.00
M	BMV1+p	MT20	2.0	4.0		
N	BMWW-t	MT20	4.0	4.0	2.00	1.75
O	BBWW-m	MT20	6.0	7.0	Edge	2.25
P	BBWW-l	MT20	6.0	7.0		
Q	BMWWW-t	MT20	5.0	6.0		
R	BMWW-t	MT20	4.0	4.0		
S	BBWW+p	MT20	6.0	7.0	3.25	2.75

LICENSED PROFESSIONAL ENGINEER
07/17/2014
R. TURENNE
100157040
PROVINCE OF ONTARIO

DIMENSIONS, SUPPORTS AND LOADINGS SPECIFIED BY FABRICATOR TO BE VERIFIED BY BUILDING DESIGNER

BEARINGS

JT	FACTORED GROSS REACTION VERT	HORZ	MAXIMUM FACTORED GROSS REACTION DOWN	HORZ	UPLIFT	INPUT BRG IN-SX	REQRD BRG IN-SX
U	1553	0	1553	0	0	5-8	1-11
M	1548	0	1548	0	0	5-8	1-11

UNFACTORED REACTIONS

1ST LCASE MAX./MIN. COMPONENT REACTIONS

JT	COMBINED	SNOW	LIVE	PERM.LIVE	WIND	DEAD	SOIL
U	1091	753 / 0	0 / 0	0 / 0	0 / 0	339 / 0	0 / 0
M	1089	750 / 0	0 / 0	0 / 0	0 / 0	338 / 0	0 / 0

BEARING MATERIAL TO BE SPF NO.2 OR BETTER AT JOINT(S) U, M

BRACING

TOP CHORD TO BE SHEATHED OR MAX. PURLIN SPACING = 4.47FT.
MAX. UNBRACED BOTTOM CHORD LENGTH = 10.00FT. OR RIGID CEILING DIRECTLY APPLIED.

1 LATERAL BRACE(S) REQUIRED AT 1/2 LENGTH OF F-Q, H-Q, I-O, J-O, J-N.
END VERTICAL(S) MUST BE SHEATHED OR HAVE BRACES AS INDICATED IN THE MAX. UNBRACED LENGTH COLUMN OF THE TABLE BELOW

LOADING

TOTAL LOAD CASES: (4)

CHORDS

MEMB. FR-TO	MAX. FORCE (LBS)	FACTORED VERT. LOAD LC1 (PLF) FROM	TO	MAX CSI (LC)	MAX UNBRAC LENGTH
A- B	0 / 40	-70.5	-70.5	0.07 (1)	10.00
B- C	-897 / 0	-70.5	-70.5	0.07 (1)	6.25
C- D	-1234 / 0	-70.5	-70.5	0.09 (1)	6.25
D- E	-1333 / 0	-70.5	-70.5	0.09 (1)	6.25
E- F	-1211 / 0	-70.5	-70.5	0.41 (1)	5.29
F- G	-1211 / 0	-70.5	-70.5	0.41 (1)	5.29
G- H	-1211 / 0	-70.5	-70.5	0.41 (1)	5.29
H- I	-1283 / 0	-70.5	-70.5	0.67 (1)	4.47
I- J	-1187 / 0	-70.5	-70.5	0.80 (1)	4.61
J- K	-1209 / 0	-70.5	-70.5	0.40 (1)	6.25
K- L	0 / 40	-70.5	-70.5	0.07 (1)	10.00
U- B	-1539 / 0	0.0	0.0	0.20 (1)	6.63
M- K	-1510 / 0	0.0	0.0	0.19 (1)	6.66
U- T	0 / 0	-17.5	-17.5	0.01 (4)	10.00
T- S	0 / 667	-17.5	-17.5	0.11 (1)	10.00
S- R	0 / 793	-17.5	-17.5	0.18 (1)	10.00
R- Q	0 / 786	-17.5	-17.5	0.20 (4)	10.00
Q- P	0 / 1280	-17.5	-17.5	0.28 (1)	10.00
P- O	0 / 1646	-17.5	-17.5	0.27 (1)	10.00
O- N	0 / 722	-17.5	-17.5	0.33 (4)	10.00
N- M	0 / 0	-17.5	-17.5	0.27 (4)	10.00

WEBS

MEMB. FR-TO	MAX. FORCE (LBS)	MAX CSI (LC)
T- C	-1095 / 0	0.29 (1)
C- S	0 / 856	0.19 (1)
S- D	-285 / 0	0.10 (1)
D- R	-13 / 5	0.01 (1)
R- E	0 / 92	0.03 (4)
E- Q	0 / 812	0.13 (1)
Q- F	-471 / 0	0.29 (1)
Q- H	-134 / 0	0.09 (1)
P- H	0 / 250	0.06 (1)
P- I	0 / 977	0.22 (1)
O- I	-1667 / 0	0.98 (1)
O- J	0 / 752	0.12 (1)
N- J	-67 / 103	0.04 (1)
B- T	0 / 817	0.18 (1)
N- K	0 / 756	0.17 (1)

DESIGN CRITERIA

SPECIFIED LOADS:

TOP CH.	LL	=	21.0	PSF
	DL	=	3.0	PSF
BOT CH.	LL	=	0.0	PSF
	DL	=	7.0	PSF
TOTAL LOAD		=	31.0	PSF

SPACING = 24.0 IN. C/C

LOADING IN FLAT SECTION BASED ON A SLOPE OF 2.00/12 MINIMUM

THIS TRUSS IS DESIGNED FOR RESIDENTIAL OR SMALL BUILDING REQUIREMENTS OF PART 9, NBCC 2010

THIS DESIGN COMPLIES WITH:
- PART 9 OF OBC 2012 , BCBC 2012 , ABC 2014
- CSA 086-09
- TPIC 2011

DESIGN ASSUMPTIONS
-OVERHANG NOT TO BE ALTERED OR CUT OFF.

(55 % OF 23.0 P.S.F. G.S.L. PLUS
8.4 P.S.F. RAIN LOAD EQUALS
21.0 P.S.F. SPECIFIED ROOF LIVE LOAD

ALLOWABLE DEFL.(LL)= L/360 (1.10")
CALCULATED VERT. DEFL.(LL) = L/ 999 (0.08")
ALLOWABLE DEFL.(TL)= L/360 (1.10")
CALCULATED VERT. DEFL.(TL) = L/ 999 (0.17")

CSI: TC=0.80 (I-J:1) , BC=0.33 (N-O:4) , WB=0.96 (I-O:1) , SSI=0.30 (H-I:1)

DOL LUMBER=1.00 NAIL=1.00 LS BEND=1.10 COMP=1.10 SHEAR=1.10 TENS= 1.10

COMPANION LIVE LOAD FACTOR = 0.50

TRUSS PLATE MANUFACTURER IS NOT RESPONSIBLE FOR QUALITY CONTROL IN THE TRUSS MANUFACTURING PLANT .

NAIL VALUES

PLATE	GRIP(DRY) (PSI) MAX	MIN	SHEAR (PLI) MAX	MIN	SECTION (PLI) MAX	MIN
MT20	618	354	1667	622	2284	1658

PLATE PLACEMENT TOL. = 0.250 inches

PLATE ROTATION TOL. = 5.0 Deg.

JSI GRIP= 0.90 (B) (INPUT = 0.90)
JSI METAL= 0.29 (K) (INPUT = 1.00)

A-N073860

253636	H04T	1	1	TRUSS DESC.	DRWG NO.

Alpa Roof Truss, Maple

Version 7.620 S Apr 16 2015 MiTek Industries, Inc. Fri Jul 17 14:08:13 2015 Page 1
ID:AyrJx9Y?fa2EXF7DRQxSq4zMEz1-NpptUvGW0lwUhJGtxSpO9nCgXQgA5yqd?Ph20hyx95m
Scale = 1:61.2

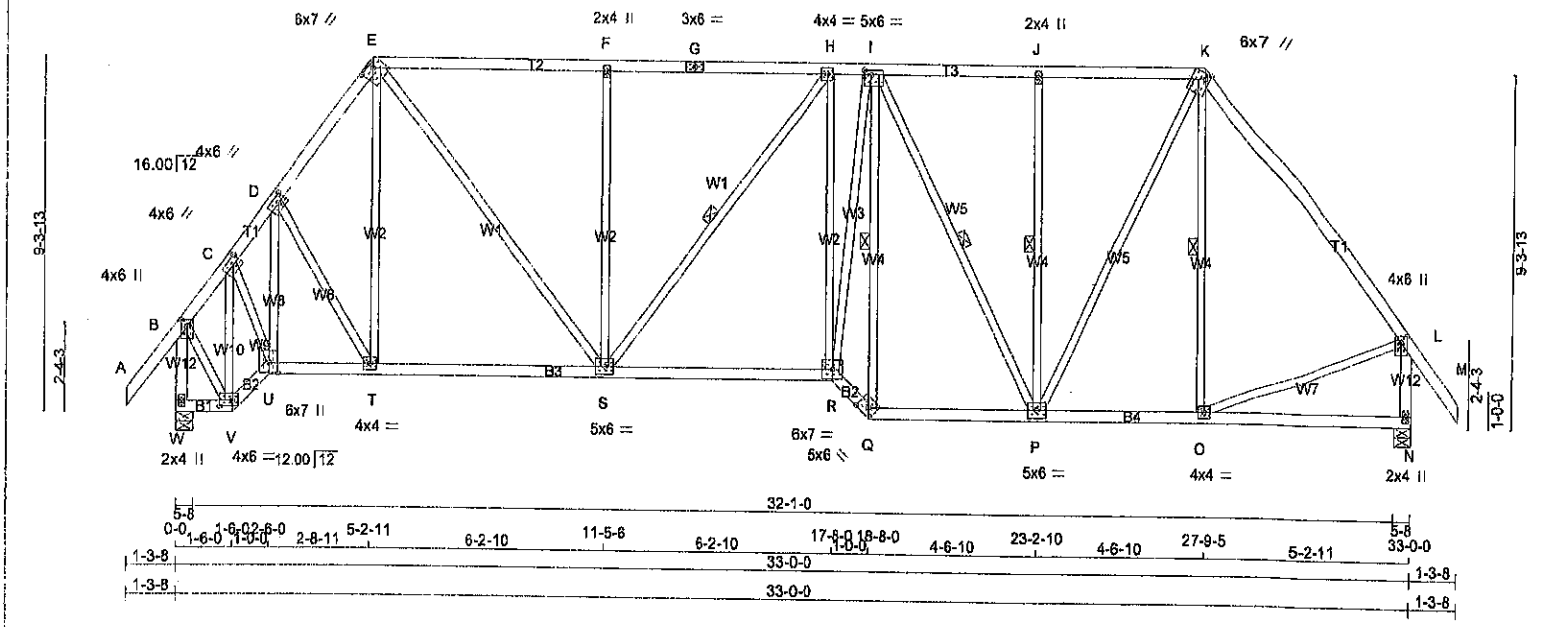

TOTAL WEIGHT = 192 lb
[M]

LUMBER
N. L. G. A. RULES

CHORDS	SIZE		LUMBER	DESCR.
A - E	2x4	DRY	No.2	SPF
E - G	2x4	DRY	No.2	SPF
G - K	2x4	DRY	No.2	SPF
K - M	2x4	DRY	No.2	SPF
W - B	2x4	DRY	No.2	SPF
N - L	2x4	DRY	No.2	SPF
W - V	2x4	DRY	No.2	SPF
V - U	2x4	DRY	No.2	SPF
U - R	2x4	DRY	No.2	SPF
R - Q	2x4	DRY	No.2	SPF
Q - N	2x4	DRY	No.2	SPF
ALL WEBS EXCEPT	2x3	DRY	No.2	SPF

DRY: SEASONED LUMBER.

PLATES (table is in inches)

JT	TYPE	PLATES	W	LEN	Y	X
B	TMVW+p	MT20	4.0	6.0	2.00	2.00
C	TMWW-t	MT20	4.0	6.0	2.00	2.50
D	TMWW-t	MT20	4.0	6.0	2.00	2.50
E	TTWW-h	MT20	6.0	7.0	1.50	3.75
F	TMW+w	MT20	2.0	4.0		
G	TS-t	MT20	3.0	6.0		
H	TMWW-t	MT20	4.0	4.0		
I	TMWWW-t	MT20	5.0	6.0	1.50	2.00
J	TMW+w	MT20	2.0	4.0		
K	TTWW+m	MT20	6.0	7.0	Edge	1.50
L	TMVW+p	MT20	4.0	6.0	2.00	2.00
N	BMV1+p	MT20	2.0	4.0		
O	BMWW-t	MT20	4.0	4.0		
P	BMWWW-t	MT20	5.0	6.0		
Q	BBW-h	MT20	5.0	6.0	2.25	3.50
R	BBWW-t	MT20	6.0	7.0		
S	BMWWW-t	MT20	5.0	6.0		
T	BMWW-t	MT20	4.0	4.0		
U	BBWW+p	MT20	6.0	7.0	3.25	2.75
V	BBWW-t	MT20	4.0	6.0	1.75	4.25
W	BMV1+p	MT20	2.0	4.0		

LICENSED PROFESSIONAL ENGINEER
07/17/2015
R. TURENNE
100157040
PROVINCE OF ONTARIO

DIMENSIONS, SUPPORTS AND LOADINGS SPECIFIED BY FABRICATOR TO BE VERIFIED BY BUILDING DESIGNER

BEARINGS

JT	FACTORED GROSS REACTION VERT	HORZ	MAXIMUM FACTORED GROSS REACTION DOWN	HORZ	UPLIFT	INPUT BRG IN-SX	REQRD BRG IN-SX
W	1553	0	1553	0	0	5-8	1-11
N	1548	0	1548	0	0	5-8	1-11

UNFACTORED REACTIONS

JT	1ST LCASE COMBINED	MAX./MIN. COMPONENT REACTIONS SNOW	LIVE	PERM.LIVE	WIND	DEAD	SOIL
W	1091	753 / 0	0 / 0	0 / 0	0 / 0	339 / 0	0 / 0
N	1089	750 / 0	0 / 0	0 / 0	0 / 0	338 / 0	0 / 0

BEARING MATERIAL TO BE SPF NO.2 OR BETTER AT JOINT(S) W, N

BRACING
TOP CHORD TO BE SHEATHED OR MAX. PURLIN SPACING = 4.90FT.
MAX. UNBRACED BOTTOM CHORD LENGTH = 10.00FT. OR RIGID CEILING DIRECTLY APPLIED.

1 LATERAL BRACE(S) REQUIRED AT 1/2 LENGTH OF H-S, I-Q, I-P, J-P, K-O.
END VERTICAL(S) MUST BE SHEATHED OR HAVE BRACES AS INDICATED IN THE MAX. UNBRACED LENGTH COLUMN OF THE TABLE BELOW

LOADING
TOTAL LOAD CASES: (4)

CHORDS

MEMB. FR-TO	MAX. FACTORED FORCE (LBS)	FACTORED VERT. LOAD (PLF) FROM	TO	LC1	MAX CSI (LC)	MAX UNBRAC LENGTH
A- B	0 / 40	-70.5	-70.5	0.10 (1)	10.00	
B- C	-996 / 0	-70.5	-70.5	0.10 (1)	6.25	
C- D	-1255 / 0	-70.5	-70.5	0.06 (1)	5.68	
D- E	-1352 / 0	-70.5	-70.5	0.09 (1)	5.51	
E- F	-1391 / 0	-70.5	-70.5	0.49 (1)	4.91	
F- G	-1392 / 0	-70.5	-70.5	0.49 (1)	4.90	
G- H	-1392 / 0	-70.5	-70.5	0.49 (1)	4.90	
H- I	-1498 / 0	-70.5	-70.5	0.17 (1)	5.18	
I- J	-1121 / 0	-70.5	-70.5	0.22 (1)	5.73	
J- K	-1121 / 0	-70.5	-70.5	0.22 (1)	5.73	
K- L	-1202 / 0	-70.5	-70.5	0.45 (1)	5.36	
L- M	0 / 40	-70.5	-70.5	0.10 (1)	10.00	
W- B	-1539 / 0	0.0	0.0	0.20 (1)	6.63	
N- L	-1611 / 0	0.0	0.0	0.19 (1)	6.88	
W- V	0 / 0	-17.5	-17.5	0.01 (4)	10.00	
V- U	0 / 671	-17.5	-17.5	0.11 (1)	10.00	
U- T	0 / 783	-17.5	-17.5	0.18 (1)	10.00	
T- S	0 / 798	-17.5	-17.5	0.23 (4)	10.00	
S- R	0 / 1499	-17.5	-17.5	0.33 (1)	10.00	
R- Q	0 / 1838	-17.5	-17.5	0.30 (1)	10.00	
Q- P	0 / 1314	-17.5	-17.5	0.26 (1)	10.00	
P- O	0 / 716	-17.5	-17.5	0.18 (1)	10.00	
O- N	0 / 0	-17.5	-17.5	0.11 (4)	10.00	

WEBS

MEMB. FR-TO	MAX. FACTORED FORCE (LBS)	MAX CSI (LC)
V- C	-1102 / 0	0.29 (1)
C- U	0 / 824	0.19 (1)
U- D	-264 / 0	0.09 (1)
D- T	0 / 27	0.01 (1)
T- E	0 / 79	0.03 (4)
E- S	0 / 965	0.22 (1)
S- F	-505 / 0	0.69 (1)
S- H	-177 / 0	0.13 (1)
R- H	-76 / 27	0.10 (1)
R- I	0 / 1449	0.33 (1)
Q- I	-1246 / 0	0.71 (1)
I- P	-436 / 0	0.32 (1)
P- J	-343 / 0	0.20 (1)
P- K	0 / 896	0.20 (1)
O- K	-161 / 25	0.09 (1)
B- V	0 / 822	0.19 (1)
O- L	0 / 765	0.17 (1)

DESIGN CRITERIA

SPECIFIED LOADS:

TOP CH.	LL	=	21.0	PSF
	DL	=	3.0	PSF
BOT CH.	LL	=	0.0	PSF
	DL	=	7.0	PSF
TOTAL LOAD		=	31.0	PSF

SPACING = 24.0 IN. C/C

LOADING IN FLAT SECTION BASED ON A SLOPE OF 2.00/12 MINIMUM

THIS TRUSS IS DESIGNED FOR RESIDENTIAL OR SMALL BUILDING REQUIREMENTS OF PART 9, NBCC 2010

THIS DESIGN COMPLIES WITH:
- PART 9 OF OBC 2012 , BCBC 2012 , ABC 2014
- CSA 086-09
- TPIC 2011

DESIGN ASSUMPTIONS
-OVERHANG NOT TO BE ALTERED OR CUT OFF.

(55 % OF 23.0 P.S.F. G.S.L. PLUS
8.4 P.S.F. RAIN LOAD EQUALS
21.0 P.S.F. SPECIFIED ROOF LIVE LOAD

ALLOWABLE DEFL.(LL)= L/360 (1.10")
CALCULATED VERT. DEFL.(LL) = L/ 999 (0.09")
ALLOWABLE DEFL.(TL)= L/360 (1.10")
CALCULATED VERT. DEFL.(TL) = L/ 999 (0.19")

CSI: TC=0.49 (E-F:1) , BC=0.33 (R-S:1) , WB=0.71 (I-Q:1) , SSI=0.21 (E-F:1)

DOL LUMBER=1.00 NAIL=1.00 LS BEND=1.10 COMP=1.10 SHEAR=1.10 TENS= 1.10

COMPANION LIVE LOAD FACTOR = 0.50

TRUSS PLATE MANUFACTURER IS NOT RESPONSIBLE FOR QUALITY CONTROL IN THE TRUSS MANUFACTURING PLANT .

NAIL VALUES

PLATE	GRIP(DRY) (PSI) MAX	MIN	SHEAR (PLI) MAX	MIN	SECTION (PLI) MAX	MIN
MT20	618	354	1667	822	2284	1656

PLATE PLACEMENT TOL. = 0.250 Inches

PLATE ROTATION TOL. = 5.0 Deg.

JSI GRIP= 0.90 (B) (INPUT = 0.90)
JSI METAL= 0.38 (I) (INPUT = 1.00)

A-N073859

JOB NUMBER	TRUSS NAME	QUANTITY	PLY	JOB DESC.	DRWG NO.
253636	H03T	1	1	TRUSS DESC.	

Alpa Roof Truss, Maple

Version 7.620 S Apr 15 2015 MiTek Industries, Inc. Fri Jul 17 13:44:51 2015 Page 1
ID:AyrJx9Y?fa2EXF7DRQxSq4zMEz1-Q56sEWi5B_HQVs5QoOfdL782VG9CbveGcl3tpyyx9Rg
Scale = 1:61.2

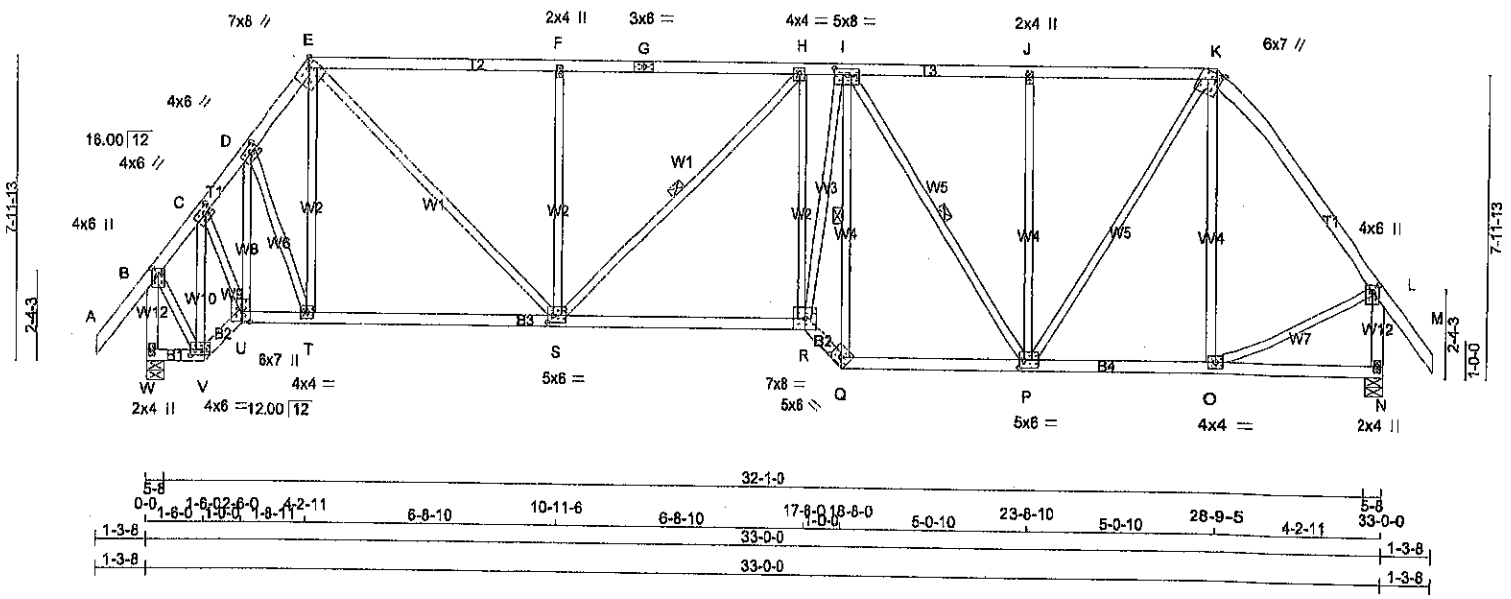

TOTAL WEIGHT = 179 lb
[M]

LUMBER
N. L. G. A. RULES

CHORDS	SIZE		LUMBER	DESCR.
A - E	2x4	DRY	No.2	SPF
E - G	2x4	DRY	No.2	SPF
G - K	2x4	DRY	No.2	SPF
K - M	2x4	DRY	No.2	SPF
W - B	2x4	DRY	No.2	SPF
N - L	2x4	DRY	No.2	SPF
W - V	2x4	DRY	No.2	SPF
V - U	2x4	DRY	No.2	SPF
U - R	2x4	DRY	No.2	SPF
R - Q	2x4	DRY	No.2	SPF
Q - N	2x4	DRY	No.2	SPF
ALL WEBS EXCEPT	2x3	DRY	No.2	SPF

DRY: SEASONED LUMBER.

PLATES (table is in inches)

JT	TYPE	PLATES	W	LEN	Y	X
B	TMWW+p	MT20	4.0	6.0	2.00	2.00
C	TMWW-t	MT20	4.0	6.0	2.00	2.50
D	TMWW-t	MT20	4.0	6.0	2.00	2.50
E	TTWW-h	MT20	7.0	8.0	Edge	2.75
F	TMW+w	MT20	2.0	4.0		
G	TS-t	MT20	3.0	6.0		
H	TMWW-t	MT20	4.0	4.0		
I	TMWWW-t	MT20	5.0	8.0	2.00	4.00
J	TMW+w	MT20	2.0	4.0		
K	TTWW+m	MT20	6.0	7.0	Edge	1.50
L	TMW+p	MT20	4.0	6.0	2.00	2.00
N	BMV1+p	MT20	2.0	4.0		
O	BMWW-t	MT20	4.0	4.0		
P	BMWWW-t	MT20	5.0	6.0	2.50	1.50
Q	BBW-h	MT20	5.0	6.0	2.00	3.25
R	BBWW-l	MT20	7.0	8.0		
S	BMWWW-t	MT20	5.0	6.0	2.25	2.00
T	BMWW-t	MT20	4.0	4.0		
U	BBWW+p	MT20	6.0	7.0	3.25	2.75
V	BBWW-l	MT20	4.0	6.0	1.75	4.25
W	BMV1+p	MT20	2.0	4.0		

LICENSED PROFESSIONAL ENGINEER
07.17.2015
R. TURENNE
100157040
PROVINCE OF ONTARIO

DIMENSIONS, SUPPORTS AND LOADINGS SPECIFIED BY FABRICATOR TO BE VERIFIED BY BUILDING DESIGNER

BEARINGS

JT	FACTORED GROSS REACTION VERT	HORZ	MAXIMUM FACTORED GROSS REACTION DOWN	HORZ	UPLIFT	INPUT BRG IN-SX	REQRD BRG IN-SX
W	1553	0	1553	0	0	5-8	1-11
N	1548	0	1548	0	0	5-8	1-11

UNFACTORED REACTIONS

JT	1ST LCASE COMBINED	MAX./MIN. COMPONENT REACTIONS SNOW	LIVE	PERM.LIVE	WIND	DEAD	SOIL
W	1091	753 / 0	0 / 0	0 / 0	0 / 0	339 / 0	0 / 0
N	1089	750 / 0	0 / 0	0 / 0	0 / 0	338 / 0	0 / 0

BEARING MATERIAL TO BE SPF NO.2 OR BETTER AT JOINT(S) W, N

BRACING
TOP CHORD TO BE SHEATHED OR MAX. PURLIN SPACING = 4.44FT.
MAX. UNBRACED BOTTOM CHORD LENGTH = 10.00FT. OR RIGID CEILING DIRECTLY APPLIED.

1 LATERAL BRACE(S) REQUIRED AT 1/ 2 LENGTH OF H-S, I-Q, I-P.
END VERTICAL(S) MUST BE SHEATHED OR HAVE BRACES AS INDICATED IN THE MAX. UNBRACED LENGTH COLUMN OF THE TABLE BELOW

LOADING
TOTAL LOAD CASES: (4)

CHORDS

MEMB. FR-TO	MAX. FACTORED FORCE (LBS)	FACTORED VERT. LOAD (PLF) FROM	TO	LC1	MAX CSI (LC)	MAX UNBRAC LENGTH
A- B	0 / 40	-70.5	-70.5	0.10 (1)	10.00	
B- C	-895 / 0	-70.5	-70.5	0.10 (1)	6.25	
C- D	-1268 / 0	-70.5	-70.5	0.05 (1)	5.68	
D- E	-1361 / 0	-70.5	-70.5	0.05 (1)	5.63	
E- F	-1642 / 0	-70.5	-70.5	0.61 (1)	4.44	
F- G	-1643 / 0	-70.5	-70.5	0.61 (1)	4.44	
G- H	-1643 / 0	-70.5	-70.5	0.61 (1)	4.44	
H- I	-1802 / 0	-70.5	-70.5	0.21 (1)	4.77	
I- J	-1283 / 0	-70.5	-70.5	0.29 (1)	6.35	
J- K	-1283 / 0	-70.5	-70.5	0.29 (1)	6.35	
K- L	-1186 / 0	-70.5	-70.5	0.27 (1)	5.57	
L- M	0 / 40	-70.5	-70.5	0.10 (1)	10.00	
W- B	-1539 / 0	0.0	0.0	0.20 (1)	6.63	
N- L	-1520 / 0	0.0	0.0	0.19 (1)	6.67	
W- V	0 / 0	-17.5	-17.5	0.01 (4)	10.00	
V- U	0 / 673	-17.5	-17.5	0.11 (1)	10.00	
U- T	0 / 777	-17.5	-17.5	0.19 (1)	10.00	
T- S	0 / 804	-17.5	-17.5	0.26 (4)	10.00	
S- R	0 / 1803	-17.5	-17.5	0.39 (1)	10.00	
R- Q	0 / 2155	-17.5	-17.5	0.35 (1)	10.00	
Q- P	0 / 1544	-17.5	-17.5	0.31 (1)	10.00	
P- O	0 / 704	-17.5	-17.5	0.17 (1)	10.00	
O- N	0 / 0	-17.5	-17.5	0.09 (4)	10.00	

WEBS

MEMB. FR-TO	MAX. FACTORED FORCE (LBS)	MAX CSI (LC)
V- C	-1106 / 0	0.29 (1)
C- U	0 / 803	0.18 (1)
U- D	-259 / 0	0.09 (1)
D- T	0 / 72	0.02 (1)
T- E	0 / 65	0.02 (4)
E- S	0 / 1179	0.27 (1)
S- F	-543 / 0	0.45 (1)
S- H	-228 / 0	0.14 (1)
R- H	-88 / 28	0.07 (1)
R- I	0 / 1699	0.38 (1)
Q- I	-1468 / 0	0.59 (1)
I- P	-482 / 0	0.28 (1)
P- J	-368 / 0	0.47 (1)
P- K	0 / 1049	0.24 (1)
O- K	-227 / 0	0.28 (1)
B- V	0 / 825	0.19 (1)
O- L	0 / 777	0.17 (1)

DESIGN CRITERIA

SPECIFIED LOADS:

TOP CH.	LL	=	21.0	PSF
	DL	=	3.0	PSF
BOT CH.	LL	=	0.0	PSF
	DL	=	7.0	PSF
TOTAL LOAD		=	31.0	PSF

SPACING = 24.0 IN. C/C

LOADING IN FLAT SECTION BASED ON A SLOPE OF 2.00/12 MINIMUM

THIS TRUSS IS DESIGNED FOR RESIDENTIAL OR SMALL BUILDING REQUIREMENTS OF PART 9, NBCC 2010

THIS DESIGN COMPLIES WITH:
- PART 9 OF OBC 2012 , BCBC 2012 , ABC 2014
- CSA 086-09
- TPIC 2011

DESIGN ASSUMPTIONS
-OVERHANG NOT TO BE ALTERED OR CUT OFF.

(55 % OF 23.0 P.S.F. G.S.L. PLUS 8.4 P.S.F. RAIN LOAD EQUALS 21.0 P.S.F. SPECIFIED ROOF LIVE LOAD

ALLOWABLE DEFL.(LL)= L/360 (1.10")
CALCULATED VERT. DEFL.(LL) = L/ 999 (0.11")
ALLOWABLE DEFL.(TL)= L/360 (1.10")
CALCULATED VERT. DEFL.(TL) = L/ 999 (0.23")

CSI: TC=0.61 (E-F:1) , BC=0.39 (R-S:1) , WB=0.59 (I-Q:1) , SSI=0.23 (E-F:1)

DOL LUMBER=1.00 NAIL=1.00 LS BEND=1.10 COMP=1.10 SHEAR=1.10 TENS= 1.10

COMPANION LIVE LOAD FACTOR = 0.50

TRUSS PLATE MANUFACTURER IS NOT RESPONSIBLE FOR QUALITY CONTROL IN THE TRUSS MANUFACTURING PLANT .

NAIL VALUES

PLATE	GRIP(DRY) (PSI) MAX	MIN	SHEAR (PLI) MAX	MIN	SECTION (PLI) MAX	MIN
MT20	618	354	1667	822	2284	1656

PLATE PLACEMENT TOL. = 0.250 inches

PLATE ROTATION TOL. = 5.0 Deg.

JSI GRIP= 0.90 (B) (INPUT = 0.90)
JSI METAL= 0.37 (I) (INPUT = 1.00)

A-H273858

253636	H02T	1	1	TRUSS DESC.	DRWG NO.

Alpa Roof Truss, Maple

Version 7.620 S Apr 15 2015 MiTek Industries, Inc. Fri Jul 17 13:44:50 2015 Page 1
ID:AyrJx9Y?fa2EXF7DRQxSq4zMEz1-yvYU1AHSQg9ZtiWDEI8Nowbq3snxsUi6NeKJHWyx9RI
Scale = 1:61.2

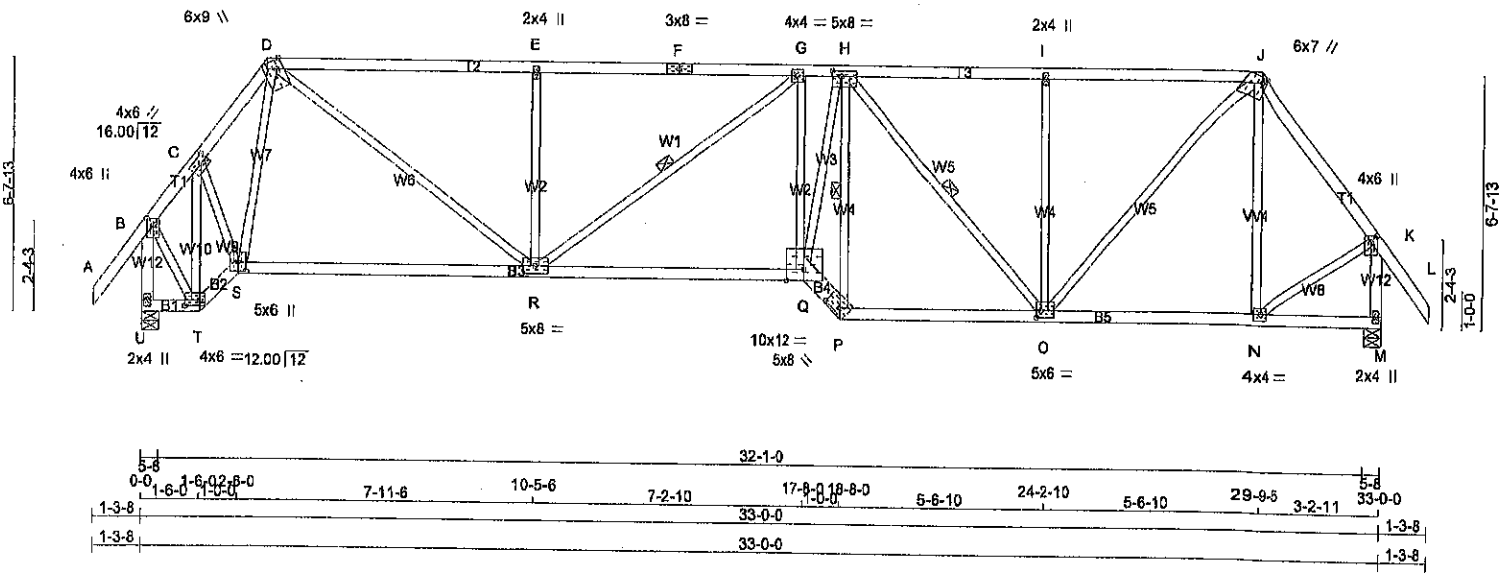

TOTAL WEIGHT = 162 lb
[M]

LUMBER
N. L. G. A. RULES

CHORDS	SIZE		LUMBER	DESCR.
A - D	2x4	DRY	No.2	SPF
D - F	2x4	DRY	No.2	SPF
F - J	2x4	DRY	No.2	SPF
J - L	2x4	DRY	No.2	SPF
U - B	2x4	DRY	No.2	SPF
M - K	2x4	DRY	No.2	SPF
U - T	2x4	DRY	No.2	SPF
T - S	2x4	DRY	No.2	SPF
S - Q	2x4	DRY	No.2	SPF
Q - P	2x6	DRY	No.2	SPF
P - M	2x4	DRY	No.2	SPF
ALL WEBS EXCEPT	2x3	DRY	No.2	SPF

DRY: SEASONED LUMBER.

PLATES (table is in inches)

JT	TYPE	PLATES	W	LEN	Y	X
B	TMVW+p	MT20	4.0	6.0	2.00	2.00
C	TMWW-t	MT20	4.0	6.0	2.00	2.50
D	TTWW+m	MT20	6.0	9.0	Edge	2.00
E	TMW+w	MT20	2.0	4.0		
F	TS-t	MT20	3.0	8.0		
G	TMWW-t	MT20	4.0	4.0		
H	TMWWW-t	MT20	5.0	8.0	1.75	3.00
I	TMW+w	MT20	2.0	4.0		
J	TTWW+m	MT20	6.0	7.0	Edge	1.50
K	TMVW+p	MT20	4.0	6.0	2.00	2.00
M	BMV1+p	MT20	2.0	4.0		
N	BMWW-t	MT20	4.0	4.0		
O	BMWWW-t	MT20	5.0	6.0	2.25	1.50
P	BBW-h	MT20	6.0	8.0	1.75	5.00
Q	BBWW-l	MT20	10.0	12.0	Edge	
R	BMWWW-t	MT20	6.0	8.0		
S	BBWW+p	MT20	6.0	6.0	2.75	2.25
T	BBWW-l	MT20	4.0	6.0	1.75	4.50
U	BMV1+p	MT20	2.0	4.0		

Edge - INDICATES REFERENCE CORNER OF PLATE TOUCHES EDGE OF CHORD.

DIMENSIONS, SUPPORTS AND LOADINGS SPECIFIED BY FABRICATOR TO BE VERIFIED BY BUILDING DESIGNER

BEARINGS

JT	FACTORED GROSS REACTION VERT	HORZ	MAXIMUM FACTORED GROSS REACTION DOWN	HORZ	UPLIFT	INPUT BRG IN-SX	REQRD BRG IN-SX
U	1553	0	1553	0	0	5-8	1-11
M	1548	0	1548	0	0	5-8	1-11

UNFACTORED REACTIONS

JT	1ST LCASE COMBINED	MAX./MIN. COMPONENT REACTIONS SNOW	LIVE	PERM.LIVE	WIND	DEAD	SOIL
U	1091	753 / 0	0 / 0	0 / 0	0 / 0	339 / 0	0 / 0
M	1089	750 / 0	0 / 0	0 / 0	0 / 0	338 / 0	0 / 0

BEARING MATERIAL TO BE SPF NO.2 OR BETTER AT JOINT(S) U, M

BRACING
TOP CHORD TO BE SHEATHED OR MAX. PURLIN SPACING = 3.89FT.
MAX. UNBRACED BOTTOM CHORD LENGTH = 10.00FT. OR RIGID CEILING DIRECTLY APPLIED.

1 LATERAL BRACE(S) REQUIRED AT 1/ 2 LENGTH OF G-R, H-P, H-O.
END VERTICAL(S) MUST BE SHEATHED OR HAVE BRACES AS INDICATED IN THE MAX. UNBRACED LENGTH COLUMN OF THE TABLE BELOW

LOADING
TOTAL LOAD CASES: (4)

CHORDS

MEMB. FR-TO	MAX. FACTORED FORCE (LBS)	FACTORED VERT. LOAD LC1 (PLF) FROM	TO	MAX CSI (LC)	MAX UNBRAC LENGTH
A- B	0 / 40	-70.5	-70.5	0.10 (1)	10.00
B- C	-894 / 0	-70.5	-70.5	0.10 (1)	6.25
C- D	-1276 / 0	-70.5	-70.5	0.07 (1)	5.65
D- E	-2020 / 0	-70.5	-70.5	0.78 (1)	3.89
E- F	-2020 / 0	-70.5	-70.5	0.78 (1)	3.89
F- G	-2020 / 0	-70.5	-70.5	0.78 (1)	3.89
G- H	-2283 / 0	-70.5	-70.5	0.28 (1)	4.24
H- I	-1509 / 0	-70.5	-70.5	0.37 (1)	4.93
I- J	-1509 / 0	-70.5	-70.5	0.37 (1)	4.93
J- K	-1142 / 0	-70.5	-70.5	0.16 (1)	5.79
K- L	0 / 40	-70.5	-70.5	0.10 (1)	10.00
U- B	-1539 / 0	0.0	0.0	0.20 (1)	6.63
M- K	-1531 / 0	0.0	0.0	0.20 (1)	6.65
U- T	0 / 0	-17.5	-17.5	0.01 (4)	10.00
T- S	0 / 677	-17.5	-17.5	0.11 (1)	10.00
S- R	0 / 781	-17.5	-17.5	0.35 (4)	10.00
R- Q	0 / 2285	-17.5	-17.5	0.52 (1)	10.00
Q- P	0 / 2628	-17.5	-17.5	0.31 (1)	10.00
P- O	0 / 1688	-17.5	-17.5	0.37 (1)	10.00
O- N	0 / 675	-17.5	-17.5	0.18 (4)	10.00
N- M	0 / 0	-17.5	-17.5	0.08 (4)	10.00

WEBS

MEMB. FR-TO	MAX. FACTORED FORCE (LBS)	MAX CSI (LC)
T- C	-1112 / 0	0.29 (1)
C- S	0 / 762	0.17 (1)
S- D	-164 / 0	0.08 (1)
D- R	0 / 1538	0.35 (1)
R- E	-580 / 0	0.28 (1)
R- G	-331 / 0	0.16 (1)
Q- G	-85 / 31	0.04 (1)
Q- H	0 / 2071	0.47 (1)
P- H	-1778 / 0	0.51 (1)
H- O	-582 / 0	0.28 (1)
O- I	-432 / 0	0.32 (1)
O- J	0 / 1262	0.28 (1)
N- J	-312 / 0	0.23 (1)
B- T	0 / 829	0.19 (1)
N- K	0 / 789	0.18 (1)

DESIGN CRITERIA

SPECIFIED LOADS:

TOP CH.	LL	=	21.0	PSF
	DL	=	3.0	PSF
BOT CH.	LL	=	0.0	PSF
	DL	=	7.0	PSF
TOTAL LOAD		=	31.0	PSF

SPACING = 24.0 IN. C/C

LOADING IN FLAT SECTION BASED ON A SLOPE OF 2.00/12 MINIMUM

THIS TRUSS IS DESIGNED FOR RESIDENTIAL OR SMALL BUILDING REQUIREMENTS OF PART 9, NBCC 2010

THIS DESIGN COMPLIES WITH:
- PART 9 OF OBC 2012 , BCBC 2012 , ABC 2014
- CSA 086-09
- TPIC 2011

DESIGN ASSUMPTIONS
-OVERHANG NOT TO BE ALTERED OR CUT OFF.

(55 % OF 23.0 P.S.F. G.S.L. PLUS 8.4 P.S.F. RAIN LOAD EQUALS 21.0 P.S.F. SPECIFIED ROOF LIVE LOAD

ALLOWABLE DEFL.(LL)= L/360 (1.10")
CALCULATED VERT. DEFL.(LL) = L/ 999 (0.14")
ALLOWABLE DEFL.(TL)= L/360 (1.10")
CALCULATED VERT. DEFL.(TL) = L/ 999 (0.29")

CSI: TC=0.78 (D-E:1) , BC=0.52 (Q-R:1) , WB=0.51 (H-P:1) , SSI=0.24 (D-E:1)

DOL LUMBER=1.00 NAIL=1.00 LS BEND=1.10 COMP=1.10 SHEAR=1.10 TENS= 1.10

COMPANION LIVE LOAD FACTOR = 0.50

TRUSS PLATE MANUFACTURER IS NOT RESPONSIBLE FOR QUALITY CONTROL IN THE TRUSS MANUFACTURING PLANT .

NAIL VALUES

PLATE	GRIP(DRY) (PSI) MAX	MIN	SHEAR (PLI) MAX	MIN	SECTION (PLI) MAX	MIN
MT20	618	354	1667	822	2284	1656

PLATE PLACEMENT TOL. = 0.250 inches

PLATE ROTATION TOL. = 5.0 Deg.

JSI GRIP= 0.90 (D) (INPUT = 0.90)
JSI METAL= 0.42 (H) (INPUT = 1.00)

A-N073857

		QUANTITY	PLY	JOB DESC.	DRWG NO.
253636	H01T	1	1	TRUSS DESC.	

Alpa Roof Truss, Maple

Version 7.820 S Apr 15 2015 MiTek Industries, Inc. Fri Jul 17 13:44:49 2015 Page 1
ID:AyrJx9Y?fa2EXF7DRQxSq4zMEz1-Ui_6qqGqgN1iFYx1hbd8FI2iKSKQ7wLz8_aml4yx9R
Scale = 1:61.1

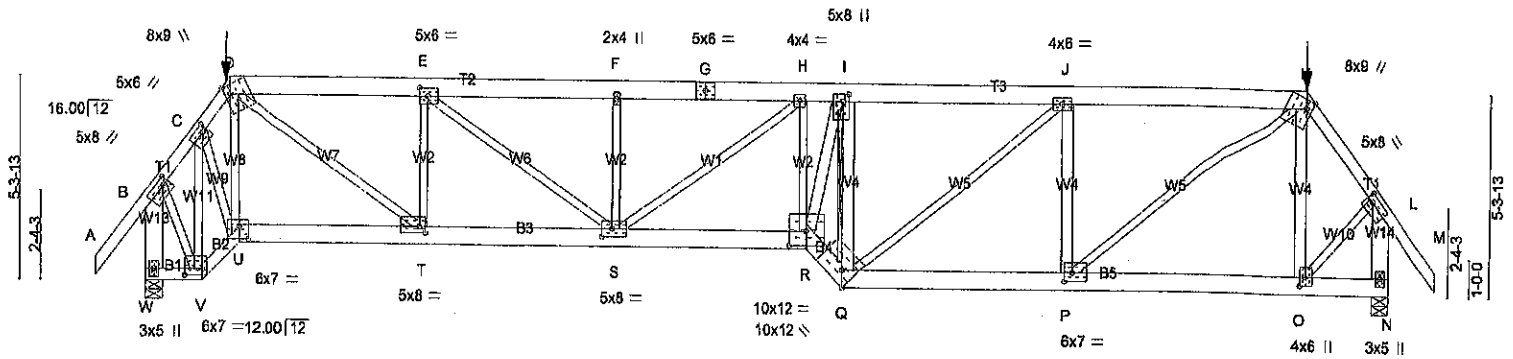

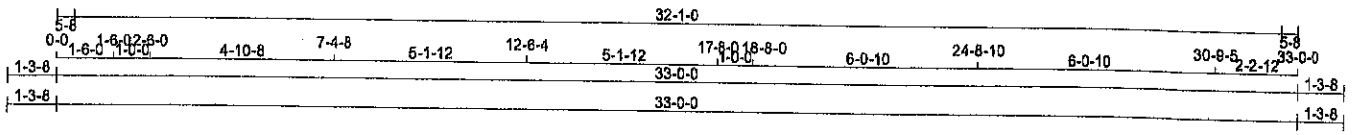

TOTAL WEIGHT = 199 lb
[M]

LUMBER
N. L. G. A. RULES

CHORDS	SIZE		LUMBER	DESCR.
A - D	2x4	DRY	No.2	SPF
D - G	2x6	DRY	No.2	SPF
G - K	2x6	DRY	No.2	SPF
K - M	2x4	DRY	No.2	SPF
W - B	2x6	DRY	No.2	SPF
N - L	2x6	DRY	No.2	SPF
W - V	2x4	DRY	No.2	SPF
V - U	2x4	DRY	No.2	SPF
U - R	2x6	DRY	No.2	SPF
R - Q	2x6	DRY	No.2	SPF
Q - N	2x6	DRY	No.2	SPF
ALL WEBS EXCEPT	2x3	DRY	No.2	SPF
R - I	2x4	DRY	No.2	SPF
Q - I	2x4	DRY	No.2	SPF
P - J	2x4	DRY	No.2	SPF
O - K	2x4	DRY	No.2	SPF

DRY: SEASONED LUMBER.

PLATES (table is in inches)

JT	TYPE	PLATES	W	LEN	Y	X
B	TMWW-t	MT20	5.0	8.0	2.00	2.00
C	TMWW-t	MT20	5.0	8.0	2.00	1.50
D	TTWW+m	MT20	8.0	9.0	2.75	1.75
E	TMWW-t	MT20	5.0	6.0	2.50	2.75
F	TMW+w	MT20	2.0	4.0		
G	TS-t	MT20	5.0	6.0		
H	TMWW-t	MT20	4.0	4.0		
I	TMWW+t	MT20	5.0	8.0	2.25	1.75
J	TMWW-t	MT20	4.0	6.0		
K	TTWW+m	MT20	8.0	9.0	2.75	1.75
L	TMVW-t	MT20	5.0	8.0	2.00	2.00
N	BMV1+p	MT20	3.0	5.0		
O	BMWW+t	MT20	4.0	6.0	2.75	1.75
P	BMWW-t	MT20	6.0	7.0	2.75	2.50
Q	BBWW-h	MT20	10.0	12.0	Edge	4.00
R	BBWW-I	MT20	10.0	12.0	4.50	6.00
S	BMWWW-t	MT20	5.0	8.0	2.50	3.25
T	BMWW-t	MT20	5.0	8.0	2.00	2.00

LICENSED PROFESSIONAL ENGINEER
07.17.2015
R. TURENNE
100157040
PROVINCE OF ONTARIO

DIMENSIONS, SUPPORTS AND LOADINGS SPECIFIED BY FABRICATOR TO BE VERIFIED BY BUILDING DESIGNER

BEARINGS

JT	FACTORED GROSS REACTION VERT	HORZ	MAXIMUM FACTORED GROSS REACTION DOWN	HORZ	UPLIFT	INPUT BRG IN-SX	REQRD BRG IN-SX
W	2907	0	2907	0	0	5-8	3-15
N	2919	0	2919	0	0	5-8	4-0

UNFACTORED REACTIONS

JT	1ST LCASE COMBINED	SNOW	LIVE	PERM.LIVE	WIND	DEAD	SOIL
		MAX./MIN. COMPONENT REACTIONS					
W	2047	1393 / 0	0 / 0	0 / 0	0 / 0	654 / 0	0 / 0
N	2055	1400 / 0	0 / 0	0 / 0	0 / 0	655 / 0	0 / 0

BEARING MATERIAL TO BE SPF NO.2 OR BETTER AT JOINT(S) W, N

BRACING
TOP CHORD TO BE SHEATHED OR MAX. PURLIN SPACING = 3.24FT.
MAX. UNBRACED BOTTOM CHORD LENGTH = 10.00FT. OR RIGID CEILING DIRECTLY APPLIED.

2x4 DRY SPF No.2 T-BRACE REQUIRED AT I-Q
FASTEN T AND I-BRACES TO NARROW EDGE OF WEB WITH ONE ROW PER PLY OF 3" COMMON WIRE NAILS @ 6" O.C. WITH 3" MINIMUM END DISTANCE. BRACE MUST COVER 90% OF WEB LENGTH.
END VERTICAL(S) MUST BE SHEATHED OR HAVE BRACES AS INDICATED IN THE MAX. UNBRACED LENGTH COLUMN OF THE TABLE BELOW

LOADING
TOTAL LOAD CASES: (4)

CHORDS

MEMB. FR-TO	MAX. FACTORED FORCE (LBS)	FACTORED VERT. LOAD LC1 (PLF) FROM	TO	MAX CSI (LC)	MAX UNBRAC LENGTH
A- B	0 / 40	-70.5	-70.5	0.11 (1)	10.00
B- C	-1751 / 0	-70.5	-70.5	0.14 (1)	4.88
C- D	-2591 / 0	-70.5	-70.5	0.14 (1)	4.15
D- E	-4318 / 0	-70.5	-70.5	0.28 (1)	3.95
E- F	-5842 / 0	-70.5	-70.5	0.34 (1)	3.41
F- G	-5842 / 0	-70.5	-70.5	0.46 (1)	3.28
G- H	-5842 / 0	-70.5	-70.5	0.46 (1)	3.28
H- I	-6137 / 0	-138.7	-138.7	0.40 (1)	3.24
I- J	-4887 / 0	-138.7	-138.7	0.69 (1)	3.38
J- K	-3780 / 0	-138.7	-138.7	0.51 (1)	3.68
K- L	-2165 / 0	-70.5	-70.5	0.13 (1)	4.50
L- M	0 / 40	-70.5	-70.5	0.11 (1)	10.00
W- B	-2861 / 0	0.0	0.0	0.27 (1)	6.13
N- L	-2937 / 0	0.0	0.0	0.26 (1)	6.09
W- V	0 / 0	-34.5	-34.5	0.02 (4)	10.00
V- U	0 / 1374	-34.5	-34.5	0.25 (1)	10.00
U- T	0 / 1548	-102.7	-102.7	0.36 (1)	10.00
T- S	0 / 4318	-102.7	-102.7	0.70 (1)	10.00
S- R	0 / 6128	-102.7	-102.7	0.99 (1)	10.00
R- Q	0 / 6677	-34.5	-34.5	0.87 (1)	10.00
Q- P	0 / 3780	-34.5	-34.5	0.59 (1)	10.00
P- O	0 / 1273	-34.5	-34.5	0.27 (1)	10.00
O- N	0 / 0	-34.5	-34.5	0.11 (4)	10.00

WEBS

MEMB. FR-TO	MAX. FACTORED FORCE (LBS)	MAX CSI (LC)
V- C	-2253 / 0	0.82 (1)
C- U	0 / 1660	0.41 (1)
D- U	-325 / 0	0.09 (1)
T- E	-1513 / 0	0.39 (1)
E- S	0 / 1904	0.47 (1)
S- F	-423 / 0	0.11 (1)
S- H	-360 / 0	0.25 (1)
R- H	0 / 318	0.08 (1)
R- I	0 / 4917	0.67 (1)
Q- I	-5460 / 0	0.90 (1)
Q- J	0 / 1413	0.35 (1)
P- J	-1842 / 0	0.50 (1)
P- K	0 / 3214	0.80 (1)
O- K	-809 / 0	0.22 (1)
B- V	0 / 1651	0.41 (1)
D- L	0 / 1654	0.41 (1)
D- T	0 / 3461	0.86 (1)

FACTORED CONCENTRATED LOADS (LBS)

JT	LOC.	LC1	MAX-	MAX+	FACE	DIR.	TYPE
D	2-2-11	-114	-114	---	FRONT	VERT	TOTAL
K	30-9-5	-114	-114	---	FRONT	VERT	TOTAL

DESIGN CRITERIA

SPECIFIED LOADS:

TOP CH.	LL	=	21.0	PSF
	DL	=	3.0	PSF
BOT CH.	LL	=	0.0	PSF
	DL	=	7.0	PSF
TOTAL LOAD		=	31.0	PSF

SPACING = 24.0 IN. C/C

LOADING IN FLAT SECTION BASED ON A SLOPE OF 2.00/12 MINIMUM

GIRDER TYPE: CPrimeHip
SIDE SETBACK = 2-2-11
END SETBACK = 5-10-8
END WALL WIDTH = 0-0
CORNER FRAMING TYPE: CONVENTIONAL
END JACK TYPE: CONVENTIONAL
APPLIED TO FRONT SIDE
- ADDT'L LOADS BASED ON 55 % OF GSL.
LOADS APPLIED TO FIRST 2-6-0 OF SPAN MEASURED FROM THE LEFT.

GIRDER TYPE: CStdGirder
START DISTANCE = 2-6-0
START SPAN CARRIED = 5-10-8
END DISTANCE = 17-8-0
END SPAN CARRIED = 5-10-8
END WALL WIDTH = 0-0
APPLIED TO FRONT SIDE OF BOTTOM CHORD.
- ADDT'L LOADS BASED ON 55 % OF GSL.

GIRDER TYPE: CPrimeHip
SIDE SETBACK = 2-2-11
END SETBACK = 5-10-8
END WALL WIDTH = 0-0
CORNER FRAMING TYPE: CONVENTIONAL
END JACK TYPE: CONVENTIONAL
APPLIED TO FRONT SIDE
- ADDT'L LOADS BASED ON 55 % OF GSL.
LOADS APPLIED TO FIRST 15-4-0 OF SPAN MEASURED FROM THE RIGHT.

THIS TRUSS IS DESIGNED FOR RESIDENTIAL OR SMALL BUILDING REQUIREMENTS OF PART 9, NBCC 2010

THIS DESIGN COMPLIES WITH:
- PART 9 OF OBC 2012 , BCBC 2012 , ABC 2014
- CSA 086-09
- TPIC 2011

DESIGN ASSUMPTIONS
-OVERHANG NOT TO BE ALTERED OR CUT OFF.

(55 % OF 23.0 P.S.F. G.S.L. PLUS
8.4 P.S.F. RAIN LOAD EQUALS
21.0 P.S.F. SPECIFIED ROOF LIVE LOAD

ALLOWABLE DEFL.(LL)= L/360 (1.10")
CALCULATED VERT. DEFL.(LL) = L/ 999 (0.34")
ALLOWABLE DEFL.(TL)= L/360 (1.10")
CALCULATED VERT. DEFL.(TL) = L/ 648 (0.61")

CSI: TC=0.59 (I-J:1) , BC=0.99 (R-S:1) , WB=0.90 (I-Q:1) , SSI=0.33 (J-K:1)

A-1507385

CONTINUED ON PAGE 2

PLATES (table is in inches)

JT	TYPE	PLATES	W	LEN	Y	X
U	BBWW-I	MT20	6.0	7.0	4.00	3.00
V	BBWW-I	MT20	6.0	7.0	2.00	5.50
W	BMV1+p	MT20	3.0	5.0		

Edge - INDICATES REFERENCE CORNER OF PLATE TOUCHES EDGE OF CHORD.

HANGERS NOTES

1) SPECIAL HANGER(S) OR CONNECTION(S) REQUIRED TO SUPPORT CONCENTRATED LOAD(S) 114.2 lbs FACTORED DOWN AT 2-2-11, AND 114.2 lbs FACTORED DOWN AT 30-9-5 ON TOP CHORD. DESIGN FOR UNSPECIFIED CONNECTION(S) IS DELEGATED TO THE BUILDING DESIGNER.

NOTES- (1)

1) Lateral brace(s) shown shall be 1x4 for Part 9 design as per OBC 9.23.13.11, and no less than 2x4 for Part 4 design.

LICENSED PROFESSIONAL ENGINEER
07.17.2015
R. TURENNE
100157040
PROVINCE OF ONTARIO

DOL LUMBER=1.00 NAIL=1.00 LS BEND=1.00 COMP=1.00 SHEAR=1.00 TENS= 1.00

COMPANION LIVE LOAD FACTOR = 0.50

AUTOSOLVE HEELS OFF

TRUSS PLATE MANUFACTURER IS NOT RESPONSIBLE FOR QUALITY CONTROL IN THE TRUSS MANUFACTURING PLANT.

NAIL VALUES

PLATE	GRIP(DRY) (PSI) MAX	MIN	SHEAR (PLI) MAX	MIN	SECTION (PLI) MAX	MIN
MT20	618	354	1867	822	2284	1656

PLATE PLACEMENT TOL. = 0.250 inches

PLATE ROTATION TOL. = 5.0 Deg.

JSI GRIP= 0.90 (T) (INPUT = 0.90)
JSI METAL= 0.71 (I) (INPUT = 1.00)

A-H273856(2)

JOB NAME	TRUSS NAME	QUANTITY	PLY	JOB DESC.	DRWG NO.
253635	H12	1	1	TRUSS DESC.	

Alpa Roof Truss, Maple

Version 7.620 S Apr 15 2015 MiTek Industries, Inc. Fri Jul 17 13:38:45 2015 Page 1
ID:AyrJx9Y?fa2EXF7DRQxSq4zMEz1-fbk8EKPEef2NBAxOKxxeee?ykLG6k9hjsgK9m7yx9ZC
Scale = 1:40.5

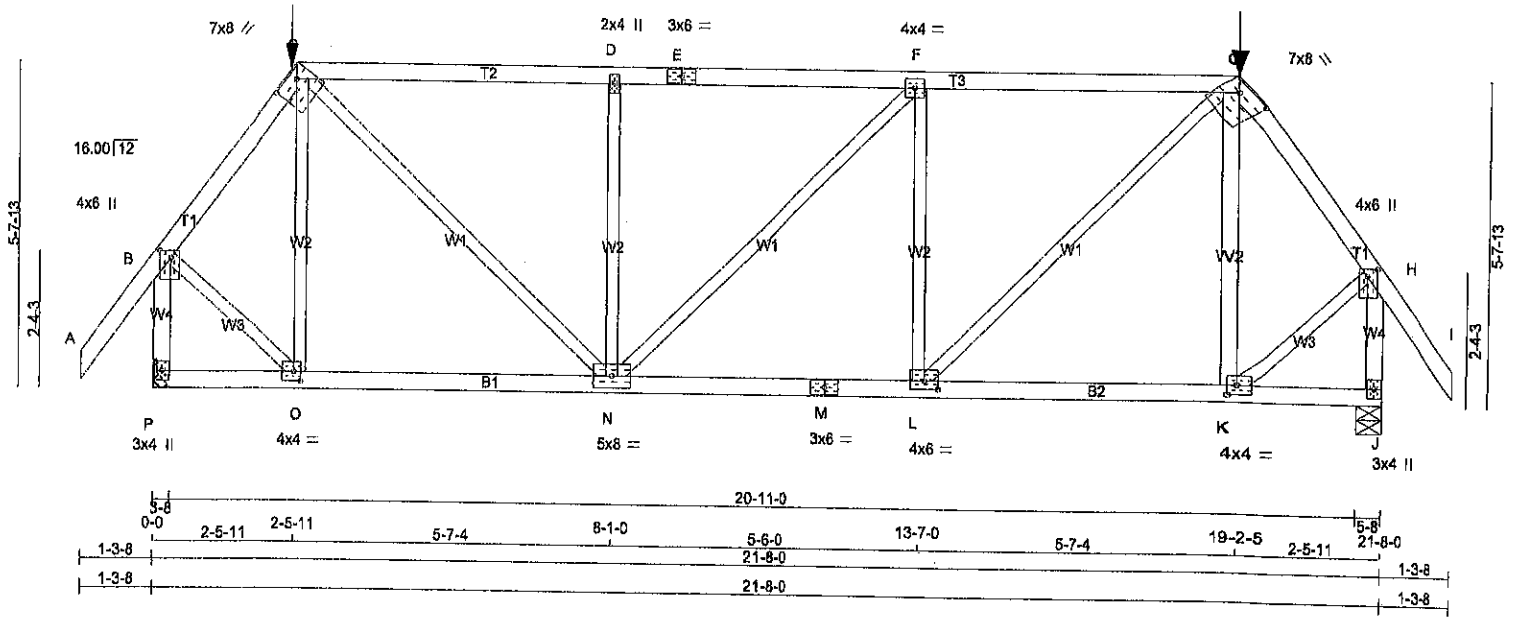

TOTAL WEIGHT = 103 lb
(M)

LUMBER
N. L. G. A. RULES

CHORDS	SIZE		LUMBER	DESCR.
A - C	2x4	DRY	No.2	SPF
C - E	2x4	DRY	No.2	SPF
E - G	2x4	DRY	No.2	SPF
G - I	2x4	DRY	No.2	SPF
P - B	2x4	DRY	No.2	SPF
J - H	2x4	DRY	No.2	SPF
P - M	2x4	DRY	No.2	SPF
M - J	2x4	DRY	No.2	SPF
ALL WEBS EXCEPT	2x3	DRY	No.2	SPF

DRY: SEASONED LUMBER.

PLATES (table is in inches)

JT	TYPE	PLATES	W	LEN	Y	X
B	TMVW+p	MT20	4.0	6.0	1.50	2.25
C	TTWW-h	MT20	7.0	8.0	1.75	5.00
D	TMW+w	MT20	2.0	4.0		
E	TS-t	MT20	3.0	6.0		
F	TMWW-t	MT20	4.0	4.0		
G	TTWW-h	MT20	7.0	8.0	1.75	5.00
H	TMVW+p	MT20	4.0	6.0	1.50	2.25
J	BMV1+p	MT20	3.0	4.0		
K	BMWW-t	MT20	4.0	4.0	2.00	1.50
L	BMWW-t	MT20	4.0	6.0	1.75	3.00
M	BS-t	MT20	3.0	6.0		
N	BMWWW-t	MT20	5.0	8.0		
O	BMWW-t	MT20	4.0	4.0	2.00	1.50
P	BMV1+p	MT20	3.0	4.0		

HANGERS NOTES

1) SPECIAL HANGER(S) OR CONNECTION(S) REQUIRED TO SUPPORT CONCENTRATED LOAD(S) 141.6 lbs FACTORED DOWN AT 19-2-5, AND 141.6 lbs FACTORED DOWN AT 2-5-11 ON TOP CHORD. DESIGN FOR UNSPECIFIED CONNECTION(S) IS DELEGATED TO THE BUILDING DESIGNER.

LICENSED PROFESSIONAL ENGINEER
07.17.2015
R. TURENNE
100157040
PROVINCE OF ONTARIO

DIMENSIONS, SUPPORTS AND LOADINGS SPECIFIED BY FABRICATOR TO BE VERIFIED BY BUILDING DESIGNER

BEARINGS

JT	FACTORED GROSS REACTION VERT	HORZ	MAXIMUM FACTORED GROSS REACTION DOWN	HORZ	UPLIFT	INPUT BRG IN-SX	REQRD BRG IN-SX
P	2045	0	2045	0	0	HANGER BY OTHERS	
						MIN. SEAT SIZE: 3-2	
J	2045	0	2045	0	0	5-8	3-2

UNFACTORED REACTIONS

JT	1ST LCASE COMBINED	MAX./MIN. COMPONENT REACTIONS SNOW	LIVE	PERM.LIVE	WIND	DEAD	SOIL
P	1440	982 / 0	0 / 0	0 / 0	0 / 0	458 / 0	0 / 0
J	1440	982 / 0	0 / 0	0 / 0	0 / 0	458 / 0	0 / 0

BEARING MATERIAL TO BE SPF NO.2 OR BETTER AT JOINT(S) J

BRACING

TOP CHORD TO BE SHEATHED OR MAX. PURLIN SPACING = 3.50FT.
MAX. UNBRACED BOTTOM CHORD LENGTH = 10.00FT. OR RIGID CEILING DIRECTLY APPLIED.

LOADING

TOTAL LOAD CASES: (4)

CHORDS

MEMB. FR-TO	MAX. FACTORED FORCE (LBS)	FACTORED VERT. LOAD LC1 (PLF) FROM	TO	MAX CSI (LC)	MAX UNBRAC LENGTH
A- B	0 / 40	-70.5	-70.5	0.11 (1)	10.00
B- C	-1487 / 0	-70.5	-70.5	0.12 (1)	5.27
C- D	-2003 / 0	-147.5	-147.5	0.82 (1)	3.54
D- E	-2004 / 0	-147.5	-147.5	0.82 (1)	3.50
E- F	-2004 / 0	-147.5	-147.5	0.82 (1)	3.50
F- G	-2006 / 0	-147.5	-147.5	0.83 (1)	3.50
G- H	-1466 / 0	-70.5	-70.5	0.12 (1)	5.27
H- I	0 / 40	-70.5	-70.5	0.11 (1)	10.00
P- B	-2028 / 0	0.0	0.0	0.28 (1)	5.88
J- H	-2027 / 0	0.0	0.0	0.28 (1)	5.88
P- O	0 / 0	-36.6	-36.6	0.19 (4)	10.00
O- N	0 / 862	-36.6	-36.6	0.32 (4)	10.00
N- M	0 / 2006	-36.6	-36.6	0.48 (1)	10.00
M- L	0 / 2006	-36.6	-36.6	0.48 (1)	10.00
L- K	0 / 862	-36.6	-36.6	0.32 (4)	10.00
K- J	0 / 0	-36.6	-36.6	0.19 (4)	10.00

WEBS

MEMB. FR-TO	MAX. FACTORED FORCE (LBS)	MAX CSI (LC)
O- C	-483 / 0	0.24 (1)
C- N	0 / 1572	0.39 (1)
N- D	-879 / 0	0.44 (1)
N- F	-3 / 0	0.00 (1)
L- F	-880 / 0	0.44 (1)
L- G	0 / 1576	0.39 (1)
K- G	-485 / 0	0.24 (1)
B- O	0 / 1095	0.27 (1)
K- H	0 / 1094	0.27 (1)

FACTORED CONCENTRATED LOADS (LBS)

JT	LOC.	LC1	MAX-	MAX+	FACE	DIR.	TYPE
C	2-5-11	-142	-142	---	FRONT	VERT	TOTAL
G	19-2-5	-142	-142	---	FRONT	VERT	TOTAL

DESIGN CRITERIA

SPECIFIED LOADS:

TOP CH.	LL	=	21.0	PSF
	DL	=	3.0	PSF
BOT CH.	LL	=	0.0	PSF
	DL	=	7.0	PSF
TOTAL LOAD		=	31.0	PSF

SPACING = 24.0 IN. C/C

LOADING IN FLAT SECTION BASED ON A SLOPE OF 2.00/12 MINIMUM

GIRDER TYPE: CPrimeHip
SIDE SETBACK = 2-5-11
END SETBACK = 6-4-8
END WALL WIDTH = 0-0
CORNER FRAMING TYPE: CONVENTIONAL
END JACK TYPE: CONVENTIONAL
APPLIED TO FRONT SIDE
- ADDT'L LOADS BASED ON 55 % OF GSL.

THIS TRUSS IS DESIGNED FOR RESIDENTIAL OR SMALL BUILDING REQUIREMENTS OF PART 9, NBCC 2010

THIS DESIGN COMPLIES WITH:
- PART 9 OF OBC 2012 , BCBC 2012 , ABC 2014
- CSA 086-09
- TPIC 2011

(55 % OF 23.0 P.S.F. G.S.L. PLUS 8.4 P.S.F. RAIN LOAD EQUALS 21.0 P.S.F. SPECIFIED ROOF LIVE LOAD

ALLOWABLE DEFL.(LL)= L/360 (0.72")
CALCULATED VERT. DEFL.(LL) = L/ 999 (0.07")
ALLOWABLE DEFL.(TL)= L/360 (0.72")
CALCULATED VERT. DEFL.(TL) = L/ 999 (0.13")

CSI: TC=0.83 (F-G:1) , BC=0.48 (L-N:1) , WB=0.44 (F-L:1) , SSI=0.42 (F-G:1)

DOL LUMBER=1.00 NAIL=1.00 LS BEND=1.00 COMP=1.00 SHEAR=1.00 TENS= 1.00

COMPANION LIVE LOAD FACTOR = 0.50

TRUSS PLATE MANUFACTURER IS NOT RESPONSIBLE FOR QUALITY CONTROL IN THE TRUSS MANUFACTURING PLANT .

NAIL VALUES

PLATE	GRIP(DRY) (PSI) MAX	MIN	SHEAR (PLI) MAX	MIN	SECTION (PLI) MAX	MIN
MT20	818	354	1667	822	2284	1656

PLATE PLACEMENT TOL. = 0.250 inches

PLATE ROTATION TOL. = 5.0 Deg.

JSI GRIP= 0.90 (L) (INPUT = 0.90)
JSI METAL= 0.57 (M) (INPUT = 1.00)

A-N0738.55

JOB NUMBER	TRUSS NAME	QUANTITY	PLY	JOB DESC.	DRWG NO.
253635	H11S	2	1	TRUSS DESC.	

Alpa Roof Truss, Maple

Version 7.620 S Apr 15 2015 MiTek Industries, Inc. Fri Jul 17 13:36:46 2015 Page 1

ID:AyrJx9Y?fa2EXF7DRQxSq4zMEz1-fbk8EKPEef2NBAxOKxxeee?44LL3kFIjsgK8m7yx9ZC

Scale: 3/16"=1'

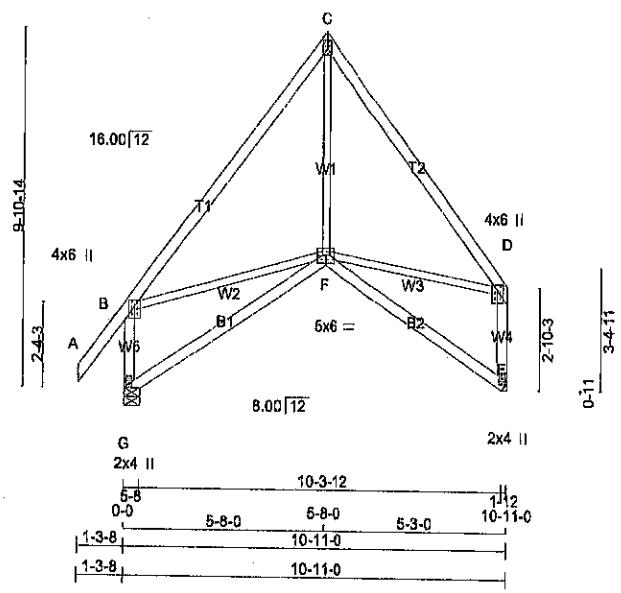

TOTAL WEIGHT = 2 X 58 = 115 lb

[M][F]

LUMBER

N. L. G. A. RULES

CHORDS	SIZE		LUMBER	DESCR.
A - C	2x4	DRY	No.2	SPF
C - D	2x4	DRY	No.2	SPF
G - B	2x4	DRY	No.2	SPF
E - D	2x4	DRY	No.2	SPF
G - F	2x4	DRY	No.2	SPF
F - E	2x4	DRY	No.2	SPF
ALL WEBS EXCEPT	2x3	DRY	No.2	SPF

DRY: SEASONED LUMBER.

PLATES (table is in inches)

JT	TYPE	PLATES	W	LEN	Y	X
B	TMVW+p	MT20	4.0	6.0	2.00	2.00
C	TTW+p	MT20	3.0	5.0	2.00	Edge
D	TMVW+p	MT20	4.0	6.0	2.00	2.00
E	BMV1+p	MT20	2.0	4.0		
F	BBWWW-p	MT20	5.0	6.0	2.75	3.00
G	BMV1+p	MT20	2.0	4.0	Edge	

Edge - INDICATES REFERENCE CORNER OF PLATE TOUCHES EDGE OF CHORD.

NOTES- (1)

1) Lateral brace(s) shown shall be 1x4 for Part 9 design as per OBC 9.23.13.11, and no less than 2x4 for Part 4 design.

DIMENSIONS, SUPPORTS AND LOADINGS SPECIFIED BY FABRICATOR TO BE VERIFIED BY BUILDING DESIGNER

BEARINGS

JT	FACTORED GROSS REACTION VERT	HORZ	MAXIMUM FACTORED GROSS REACTION DOWN	HORZ	UPLIFT	INPUT BRG IN-SX	REQRD BRG IN-SX
G	579	0	579	0	0	5-8	1-8
E	480	0	480	0	0	HANGER BY OTHERS MIN. SEAT SIZE: 1-8	

UNFACTORED REACTIONS

JT	1ST LCASE COMBINED	MAX./MIN. COMPONENT REACTIONS SNOW	LIVE	PERM.LIVE	WIND	DEAD	SOIL
G	406	288 / 0	0 / 0	0 / 0	0 / 0	118 / 0	0 / 0
E	338	229 / 0	0 / 0	0 / 0	0 / 0	109 / 0	0 / 0

BEARING MATERIAL TO BE SPF NO.2 OR BETTER AT JOINT(S) G

BRACING

TOP CHORD TO BE SHEATHED OR MAX. PURLIN SPACING = 6.25FT.
MAX. UNBRACED BOTTOM CHORD LENGTH = 10.00FT. OR RIGID CEILING DIRECTLY APPLIED.

LOADING

TOTAL LOAD CASES: (4)

CHORDS

MEMB. FR-TO	MAX. FACTORED FORCE (LBS)	FACTORED VERT. LOAD LC1 (PLF) FROM	TO	MAX CSI (LC)	MAX UNBRAC LENGTH
A- B	0 / 40	-70.5	-70.5	0.10 (1)	10.00
B- C	-361 / 0	-70.5	-70.5	0.30 (1)	6.25
C- D	-361 / 0	-70.5	-70.5	0.25 (1)	6.25
G- B	-530 / 0	0.0	0.0	0.07 (1)	7.81
E- D	-434 / 0	0.0	0.0	0.07 (1)	7.81
G- F	0 / 0	-17.5	-17.5	0.16 (4)	10.00
F- E	0 / 0	-17.5	-17.5	0.14 (4)	10.00

WEBS

MEMB. FR-TO	MAX. FACTORED FORCE (LBS)	MAX CSI (LC)
F- C	0 / 193	0.05 (4)
B- F	0 / 224	0.05 (1)
F- D	0 / 220	0.05 (1)

DESIGN CRITERIA

SPECIFIED LOADS:

TOP CH.	LL	=	21.0	PSF
	DL	=	3.0	PSF
BOT CH.	LL	=	0.0	PSF
	DL	=	7.0	PSF
TOTAL LOAD		=	31.0	PSF

SPACING = 24.0 IN. C/C

THIS TRUSS IS DESIGNED FOR RESIDENTIAL OR SMALL BUILDING REQUIREMENTS OF PART 9, NBCC 2010

THIS DESIGN COMPLIES WITH:
- PART 9 OF OBC 2012 , BCBC 2012 , ABC 2014
- CSA 086-09
- TPIC 2011

(55 % OF 23.0 P.S.F. G.S.L. PLUS 8.4 P.S.F. RAIN LOAD EQUALS 21.0 P.S.F. SPECIFIED ROOF LIVE LOAD

ALLOWABLE DEFL.(LL)= L/360 (0.36")
CALCULATED VERT. DEFL.(LL) = L/ 999 (0.01")
ALLOWABLE DEFL.(TL)= L/360 (0.36")
CALCULATED VERT. DEFL.(TL) = L/ 999 (0.06")

CSI: TC=0.30 (B-C:1) , BC=0.16 (F-G:4) , WB=0.05 (B-F:1) , SSI=0.09 (B-C:1)

DOL LUMBER=1.00 NAIL=1.00 LS BEND=1.10 COMP=1.10 SHEAR=1.10 TENS= 1.10

COMPANION LIVE LOAD FACTOR = 0.50

TRUSS PLATE MANUFACTURER IS NOT RESPONSIBLE FOR QUALITY CONTROL IN THE TRUSS MANUFACTURING PLANT .

NAIL VALUES

PLATE	GRIP(DRY) (PSI) MAX	MIN	SHEAR (PLI) MAX	MIN	SECTION (PLI) MAX	MIN
MT20	618	354	1667	822	2284	1656

PLATE PLACEMENT TOL. = 0.250 Inches

PLATE ROTATION TOL. = 6.0 Deg.

JSI GRIP= 0.67 (G) (INPUT = 0.90)
JSI METAL= 0.13 (G) (INPUT = 1.00)

LICENSED PROFESSIONAL ENGINEER
07-17-2015
R. TURENNE
100131040
PROVINCE OF ONTARIO

A-15073854

JOB NAME	TRUSS NAME	QUANTITY	PLY	JOB DESC.	DRWG NO.
253635	H11	1	1	TRUSS DESC.	

Alpa Roof Truss, Maple

Version 7.620 S Apr 15 2015 MiTek Industries, Inc. Fri Jul 17 13:36:44 2015 Page 1
ID:AyrJx9Y?fa2EXF7DRQxSq4zMEz1-BPAm1?OctMwWZ0MpmEQP5RTvJy?q?oRad0bbDhyx9ZH
Scale: 3/16"=1'

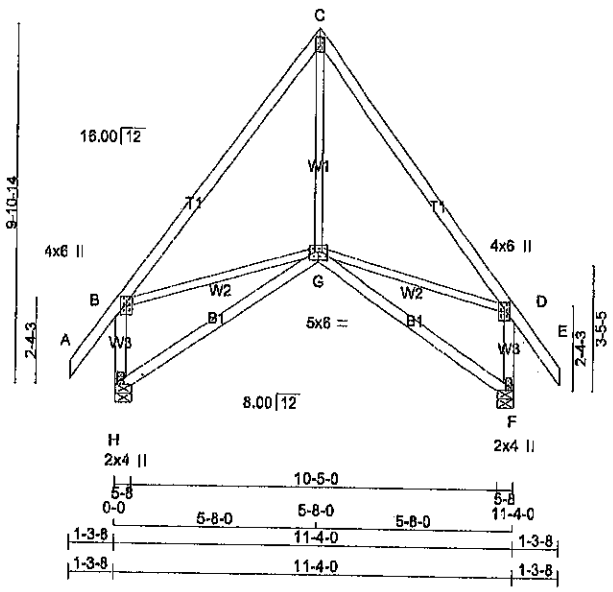

TOTAL WEIGHT = 62 lb
[M](F)

LUMBER
N. L. G. A. RULES

CHORDS	SIZE		LUMBER	DESCR.
A - C	2x4	DRY	No.2	SPF
C - E	2x4	DRY	No.2	SPF
H - B	2x4	DRY	No.2	SPF
F - D	2x4	DRY	No.2	SPF
H - G	2x4	DRY	No.2	SPF
G - F	2x4	DRY	No.2	SPF
ALL WEBS EXCEPT	2x3	DRY	No.2	SPF

DRY: SEASONED LUMBER.

PLATES (table is in inches)

JT	TYPE	PLATES	W	LEN	Y	X
B	TMVW+p	MT20	4.0	6.0	2.00	2.00
C	TTW+p	MT20	3.0	5.0	2.00	Edge
D	TMVW+p	MT20	4.0	6.0	2.00	2.00
F	BMV1+p	MT20	2.0	4.0	Edge	
G	BBWWW-p	MT20	5.0	6.0	2.75	3.00
H	BMV1+p	MT20	2.0	4.0	Edge	

Edge - INDICATES REFERENCE CORNER OF PLATE TOUCHES EDGE OF CHORD.

NOTES- (1)
1) Lateral brace(s) shown shall be 1x4 for Part 9 design as per OBC 9.23.13.11, and no less than 2x4 for Part 4 design.

DIMENSIONS, SUPPORTS AND LOADINGS SPECIFIED BY FABRICATOR TO BE VERIFIED BY BUILDING DESIGNER

BEARINGS

JT	FACTORED GROSS REACTION VERT	HORZ	MAXIMUM FACTORED GROSS REACTION DOWN	HORZ	UPLIFT	INPUT BRG IN-SX	REQRD BRG IN-SX
H	598	0	598	0	0	5-8	1-8
F	598	0	598	0	0	5-8	1-8

UNFACTORED REACTIONS

JT	1ST LCASE COMBINED	MAX./MIN. COMPONENT REACTIONS SNOW	LIVE	PERM.LIVE	WIND	DEAD	SOIL
H	419	297 / 0	0 / 0	0 / 0	0 / 0	122 / 0	0 / 0
F	419	297 / 0	0 / 0	0 / 0	0 / 0	122 / 0	0 / 0

BEARING MATERIAL TO BE SPF NO.2 OR BETTER AT JOINT(S) H, F

BRACING
TOP CHORD TO BE SHEATHED OR MAX. PURLIN SPACING = 6.25FT.
MAX. UNBRACED BOTTOM CHORD LENGTH = 10.00FT. OR RIGID CEILING DIRECTLY APPLIED.

LOADING
TOTAL LOAD CASES: (4)

CHORDS

MEMB. FR-TO	MAX. FACTORED FORCE (LBS)	FACTORED VERT. LOAD LC1 (PLF) FROM	TO	MAX CSI (LC)	MAX UNBRAC LENGTH
A- B	0 / 40	-70.5	-70.5	0.10 (1)	10.00
B- C	-390 / 0	-70.5	-70.5	0.30 (1)	6.25
C- D	-390 / 0	-70.5	-70.5	0.30 (1)	6.25
D- E	0 / 40	-70.5	-70.5	0.10 (1)	10.00
H- B	-548 / 0	0.0	0.0	0.08 (1)	7.81
F- D	-548 / 0	0.0	0.0	0.08 (1)	7.81
H- G	0 / 0	-17.5	-17.5	0.16 (4)	10.00
G- F	0 / 0	-17.5	-17.5	0.16 (4)	10.00

WEBS

MEMB. FR-TO	MAX. FACTORED FORCE (LBS)	MAX CSI (LC)
G- C	0 / 224	0.05 (4)
B- G	0 / 242	0.05 (1)
G- D	0 / 242	0.05 (1)

DESIGN CRITERIA

SPECIFIED LOADS:

TOP CH.	LL	=	21.0	PSF
	DL	=	3.0	PSF
BOT CH.	LL	=	0.0	PSF
	DL	=	7.0	PSF
TOTAL LOAD		=	31.0	PSF

SPACING = 24.0 IN. C/C

THIS TRUSS IS DESIGNED FOR RESIDENTIAL OR SMALL BUILDING REQUIREMENTS OF PART 9, NBCC 2010

THIS DESIGN COMPLIES WITH:
- PART 9 OF OBC 2012 , BCBC 2012 , ABC 2014
- CSA 086-09
- TPIC 2011

(55 % OF 23.0 P.S.F. G.S.L. PLUS
8.4 P.S.F. RAIN LOAD EQUALS
21.0 P.S.F. SPECIFIED ROOF LIVE LOAD

ALLOWABLE DEFL.(LL)= L/360 (0.38")
CALCULATED VERT. DEFL.(LL) = L/ 999 (0.01")
ALLOWABLE DEFL.(TL)= L/360 (0.38")
CALCULATED VERT. DEFL.(TL) = L/ 999 (0.06")

CSI: TC=0.30 (C-D:1) , BC=0.16 (F-G:4) , WB=0.05 (D-G:1) , SSI=0.09 (C-D:1)

DOL LUMBER=1.00 NAIL=1.00 LS BEND=1.10 COMP=1.10 SHEAR=1.10 TENS= 1.10

COMPANION LIVE LOAD FACTOR = 0.50

TRUSS PLATE MANUFACTURER IS NOT RESPONSIBLE FOR QUALITY CONTROL IN THE TRUSS MANUFACTURING PLANT .

NAIL VALUES

PLATE	GRIP(DRY) (PSI) MAX	MIN	SHEAR (PLI) MAX	MIN	SECTION (PLI) MAX	MIN
MT20	818	354	1667	822	2264	1656

PLATE PLACEMENT TOL. = 0.250 inches

PLATE ROTATION TOL. = 5.0 Deg.

JSI GRIP= 0.89 (F) (INPUT = 0.90)
JSI METAL= 0.13 (H) (INPUT = 1.00)

A-1073853

JOB NUMBER	TRUSS NAME	QUANTITY	PLY	JOB DESC.	DRWG NO.
253635	H09	3	1	TRUSS DESC.	

Alpa Roof Truss, Maple

Version 7.620 S Apr 15 2015 MiTek Industries, Inc. Fri Jul 17 13:36:44 2015 Page 1
ID:AyrJx9Y?fa2EXF7DRQxSq4zMEz1-BPAm1?OclMwWZ0MpmEQP5RTuny0s?mNad0bbDhyx9ZI-
Scale = 1:32.9

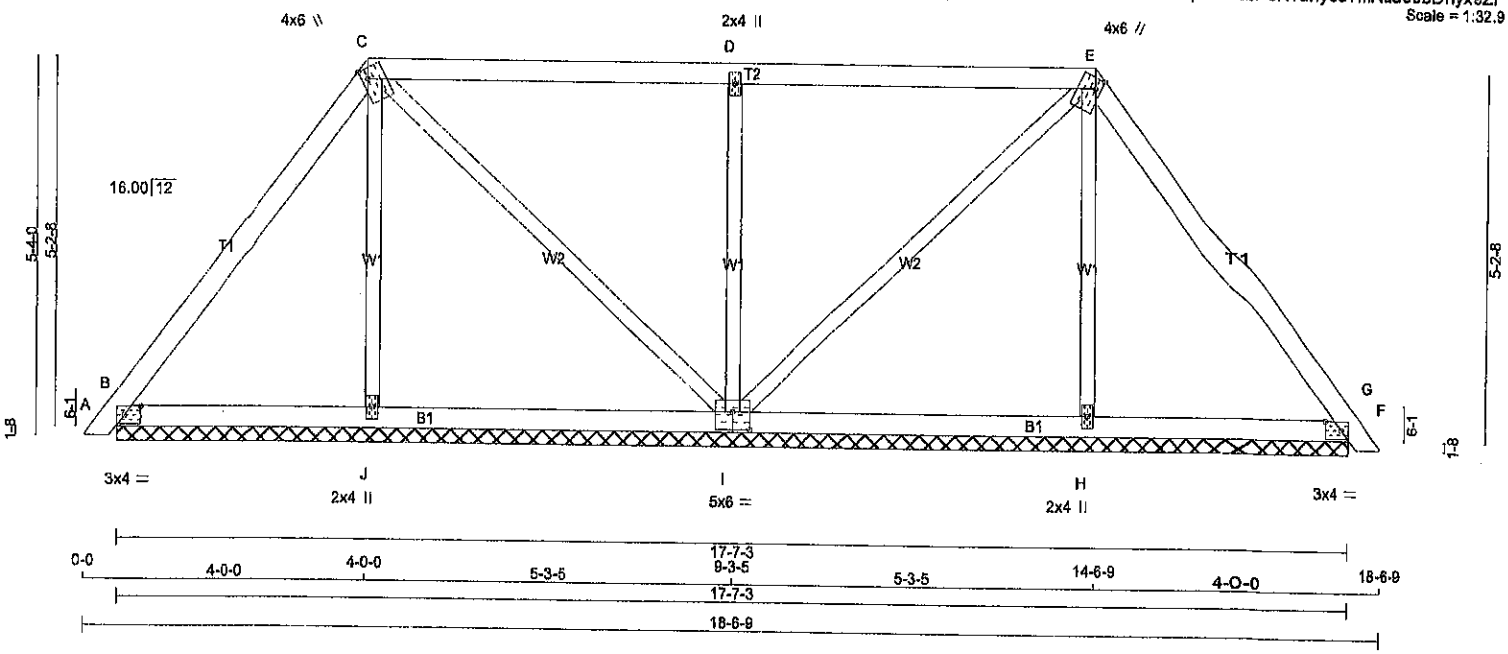

TOTAL WEIGHT = 3 X 70 = 209 lb
[M]

LUMBER
N. L. G. A. RULES

CHORDS	SIZE		LUMBER	DESCR.
A - C	2x4	DRY	No.2	SPF
C - E	2x4	DRY	No.2	SPF
E - G	2x4	DRY	No.2	SPF
B - I	2x4	DRY	No.2	SPF
I - F	2x4	DRY	No.2	SPF
ALL WEBS	2x3	DRY	No.2	SPF

DRY: SEASONED LUMBER.

PLATES (table is in inches)

JT	TYPE	PLATES	W	LEN	Y	X
B	TMB1-I	MT20	3.0	4.0	1.50	2.75
C	TTWW+m	MT20	4.0	6.0	1.75	1.00
D	TMW+w	MT20	2.0	4.0		
E	TTWW+m	MT20	4.0	6.0	1.75	1.00
F	TMB1-I	MT20	3.0	4.0	1.50	2.75
H	BMW1+w	MT20	2.0	4.0		
I	BSWWW1-I	MT20	5.0	6.0	3.00	3.00
J	BMW1+w	MT20	2.0	4.0		

NOTES- (1)
1) Lateral brace(s) shown shall be 1x4 for Part 9 design as per OBC 9.23.13.11, and no less than 2x4 for Part 4 design.

LICENSED PROFESSIONAL ENGINEER
@7.17.2014
R. TURENNE
100157040
PROVINCE OF ONTARIO

DIMENSIONS, SUPPORTS AND LOADINGS SPECIFIED BY FABRICATOR TO BE VERIFIED BY BUILDING DESIGNER

BEARINGS

JT	FACTORED GROSS REACTION VERT	HORZ	MAXIMUM FACTORED GROSS REACTION DOWN	HORZ	UPLIFT	INPUT BRG IN-SX	REQRD BRG IN-SX
B	245	0	245	0	0	17-7-3 (8-9-10)	8
J	231	0	231	0	0	17-7-3 (8-9-10)	8
I	646	0	646	0	0	17-7-3 (8-9-10)	8
H	231	0	231	0	0	17-7-3 (8-9-10)	8
F	245	0	245	0	0	17-7-3 (8-9-10)	8

VALUE IN PARENTHESIS INDICATES EFFECTIVE BEARING LENGTH

UNFACTORED REACTIONS

JT	1ST LCASE COMBINED	MAX./MIN. COMPONENT REACTIONS SNOW	LIVE	PERM.LIVE	WIND	DEAD	SOIL
B	169	132 / 0	0 / 0	0 / 0	0 / 0	37 / 0	0 / 0
J	167	87 / 0	0 / 0	0 / 0	0 / 0	80 / 0	0 / 0
I	451	329 / 0	0 / 0	0 / 0	0 / 0	122 / 0	0 / 0
H	167	87 / 0	0 / 0	0 / 0	0 / 0	80 / 0	0 / 0
F	169	132 / 0	0 / 0	0 / 0	0 / 0	37 / 0	0 / 0

BEARING MATERIAL TO BE SPF NO.2 OR BETTER AT JOINT(S) B, J, I, H, F

BRACING
TOP CHORD TO BE SHEATHED OR MAX. PURLIN SPACING = 8.25FT.
MAX. UNBRACED BOTTOM CHORD LENGTH = 10.00FT. OR RIGID CEILING DIRECTLY APPLIED.

LOADING
TOTAL LOAD CASES: (4)

CHORDS

MEMB. FR-TO	MAX. FACTORED FORCE (LBS)	FACTORED VERT. LOAD LC1 (PLF) FROM	TO	MAX CSI (LC)	MAX UNBRAC LENGTH
A- B	0 / 9	-70.5	-70.5	0.01 (1)	10.00
B- C	-91 / 0	-70.5	-70.5	0.15 (1)	6.25
C- D	-1 / 0	-70.5	-70.5	0.33 (1)	10.00
D- E	-1 / 0	-70.5	-70.5	0.33 (1)	10.00
E- F	-91 / 0	-70.5	-70.5	0.15 (1)	6.25
F- G	0 / 9	-70.5	-70.5	0.01 (1)	10.00
B- J	0 / 53	-17.5	-17.5	0.08 (4)	10.00
J- I	0 / 50	-17.5	-17.5	0.10 (4)	10.00
I- H	0 / 50	-17.5	-17.5	0.10 (4)	10.00
H- F	0 / 53	-17.5	-17.5	0.08 (4)	10.00

WEBS

MEMB. FR-TO	MAX. FACTORED FORCE (LBS)	MAX CSI (LC)
J- C	-146 / 0	0.06 (1)
C- I	-66 / 0	0.08 (1)
I- D	-464 / 0	0.19 (1)
I- E	-66 / 0	0.06 (1)
H- E	-146 / 0	0.06 (1)

DESIGN CRITERIA

SPECIFIED LOADS:

TOP CH.	LL	=	21.0	PSF
	DL	=	3.0	PSF
BOT CH.	LL	=	0.0	PSF
	DL	=	7.0	PSF
TOTAL LOAD		=	31.0	PSF

SPACING = 24.0 IN. C/C

LOADING IN FLAT SECTION BASED ON A SLOPE OF 2.00/12 MINIMUM

THIS TRUSS IS DESIGNED FOR RESIDENTIAL OR SMALL BUILDING REQUIREMENTS OF PART 9, NBCC 2010

THIS DESIGN COMPLIES WITH:
- PART 9 OF OBC 2012 , BCBC 2012 , ABC 2014
- CSA 086-09
- TPIC 2011

(55 % OF 23.0 P.S.F. G.S.L. PLUS 8.4 P.S.F. RAIN LOAD EQUALS 21.0 P.S.F. SPECIFIED ROOF LIVE LOAD

CSI: TC=0.33 (C-D:1) , BC=0.10 (H-I:4) , WB=0.19 (D-I:1) , SSI=0.18 (C-D:1)

DOL LUMBER=1.00 NAIL=1.00 LS BEND=1.10 COMP=1.10 SHEAR=1.10 TENS= 1.10

COMPANION LIVE LOAD FACTOR = 0.50

TRUSS PLATE MANUFACTURER IS NOT RESPONSIBLE FOR QUALITY CONTROL IN THE TRUSS MANUFACTURING PLANT.

NAIL VALUES

PLATE	GRIP(DRY) (PSI) MAX	MIN	SHEAR (PLI) MAX	MIN	SECTION (PLI) MAX	MIN
MT20	618	354	1667	822	2284	1656

PLATE PLACEMENT TOL. = 0.250 Inches

PLATE ROTATION TOL. = 5.0 Deg.

JSI GRIP= 0.80 (F) (INPUT = 0.90)
JSI METAL= 0.21 (I) (INPUT = 1.00)

A-15073852

JOB NUMBER	TRUSS NAME	QUANTITY	PLY	JOB DESC.	DRWG NO.
253635	H08	2	1	TRUSS DESC.	

Alpa Roof Truss, Maple

Version 7.620 S Apr 15 2016 MiTek Industries, Inc. Fri Jul 17 13:36:43 2015 Page 1
ID:AyrJx9Y?fa2EXF7DRQxSq4zMEz1-jDcNqfO_72ofysndDVVvAZDwhrYgrGJ0QOMr2hEyx9Z
Scale: 3/8"=1'

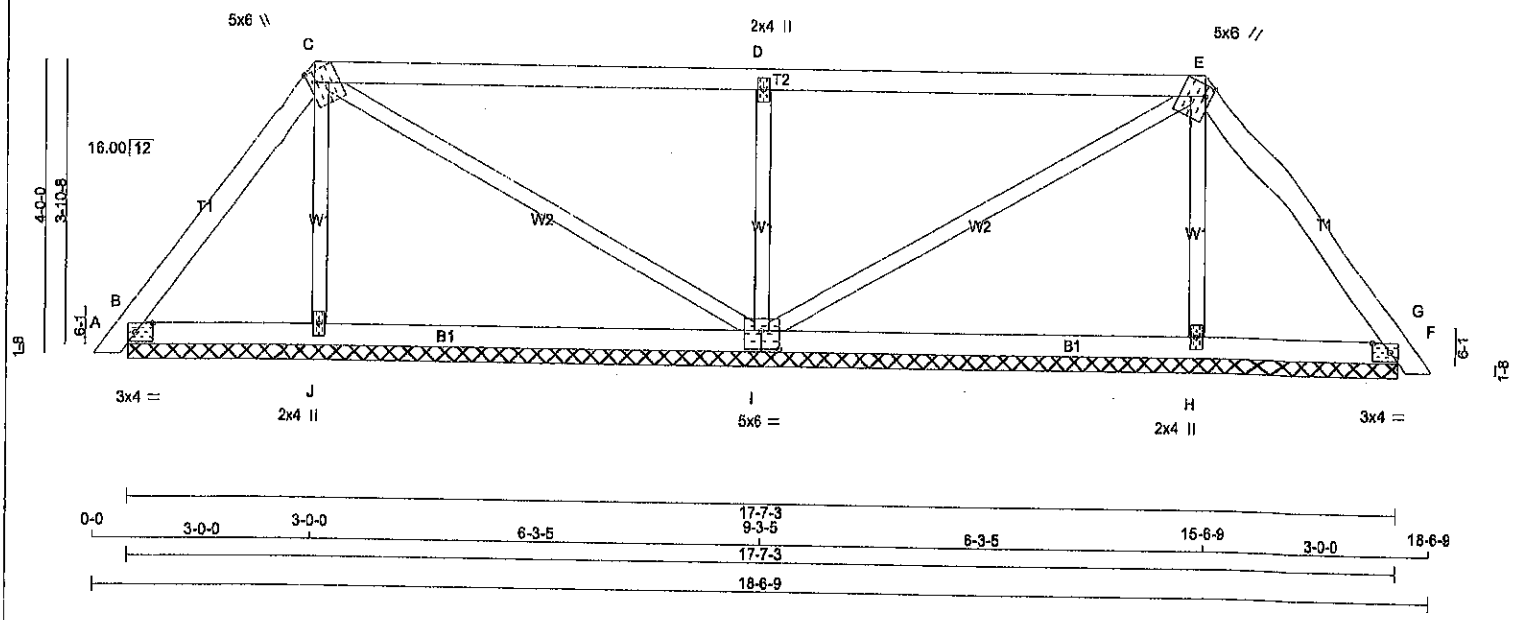

TOTAL WEIGHT = 2 X 85 = 130 lb
[M]

LUMBER
N. L. G. A. RULES

CHORDS	SIZE		LUMBER	DESCR.
A - C	2x4	DRY	No.2	SPF
C - E	2x4	DRY	No.2	SPF
E - G	2x4	DRY	No.2	SPF
B - I	2x4	DRY	No.2	SPF
I - F	2x4	DRY	No.2	SPF
ALL WEBS	2x3	DRY	No.2	SPF

DRY: SEASONED LUMBER.

PLATES (table is in inches)

JT	TYPE	PLATES	W	LEN	Y	X
B	TMB1-I	MT20	3.0	4.0	1.50	2.75
C	TTWW+m	MT20	5.0	6.0	1.75	1.00
D	TMW+w	MT20	2.0	4.0		
E	TTWW+m	MT20	5.0	6.0	1.75	1.00
F	TMB1-I	MT20	3.0	4.0	1.50	2.75
H	BMW1+w	MT20	2.0	4.0		
I	BSWWW1-I	MT20	5.0	6.0	3.00	3.00
J	BMW1+w	MT20	2.0	4.0		

NOTES- (1)
1) Lateral brace(s) shown shall be 1x4 for Part 9 design as per OBC 9.23.13.11, and no less than 2x4 for Part 4 design.

DIMENSIONS, SUPPORTS AND LOADINGS SPECIFIED BY FABRICATOR TO BE VERIFIED BY BUILDING DESIGNER

BEARINGS

JT	FACTORED GROSS REACTION VERT	HORZ	MAXIMUM FACTORED GROSS REACTION DOWN	HORZ	UPLIFT	INPUT BRG IN-SX	REQRD BRG IN-SX
B	193	0	193	0	0	17-7-3 (8-9-10)	8
J	252	0	252	0	0	17-7-3 (8-9-10)	8
I	709	0	709	0	0	17-7-3 (8-9-10)	8
H	252	0	252	0	0	17-7-3 (8-9-10)	8
F	193	0	193	0	0	17-7-3 (8-9-10)	8

VALUE IN PARENTHESIS INDICATES EFFECTIVE BEARING LENGTH

UNFACTORED REACTIONS

JT	1ST LCASE COMBINED	MAX./MIN. COMPONENT REACTIONS SNOW	LIVE	PERM.LIVE	WIND	DEAD	SOIL
B	132	110 / 0	0 / 0	0 / 0	0 / 0	22 / 0	0 / 0
J	182	97 / 0	0 / 0	0 / 0	0 / 0	85 / 0	0 / 0
I	496	354 / 0	0 / 0	0 / 0	0 / 0	143 / 0	0 / 0
H	182	97 / 0	0 / 0	0 / 0	0 / 0	85 / 0	0 / 0
F	132	110 / 0	0 / 0	0 / 0	0 / 0	22 / 0	0 / 0

BEARING MATERIAL TO BE SPF NO.2 OR BETTER AT JOINT(S) B, J, I, H, F

BRACING
TOP CHORD TO BE SHEATHED OR MAX. PURLIN SPACING = 6.25FT.
MAX. UNBRACED BOTTOM CHORD LENGTH = 10.00FT. OR RIGID CEILING DIRECTLY APPLIED.

LOADING
TOTAL LOAD CASES: (4)

CHORDS

MEMB. FR-TO	MAX. FACTORED FORCE (LBS)	FACTORED VERT. LOAD LC1 (PLF) FROM	TO	MAX CSI (LC)	MAX UNBRAC LENGTH
A- B	0 / 9	-70.5	-70.5	0.01 (1)	10.00
B- C	-88 / 0	-70.5	-70.5	0.08 (1)	6.25
C- D	-9 / 0	-70.5	-70.5	0.47 (1)	10.00
D- E	-9 / 0	-70.5	-70.5	0.47 (1)	10.00
E- F	-88 / 0	-70.5	-70.5	0.08 (1)	6.25
F- G	0 / 9	-70.5	-70.5	0.01 (1)	10.00
B- J	0 / 51	-17.5	-17.5	0.10 (4)	10.00
J- I	0 / 46	-17.5	-17.5	0.15 (4)	10.00
I- H	0 / 46	-17.5	-17.5	0.15 (4)	10.00
H- F	0 / 51	-17.5	-17.5	0.10 (4)	10.00

WEBS

MEMB. FR-TO	MAX. FACTORED FORCE (LBS)	MAX CSI (LC)
J- C	-163 / 0	0.04 (1)
C- I	-42 / 0	0.04 (1)
I- D	-552 / 0	0.13 (1)
I- E	-42 / 0	0.04 (1)
H- E	-163 / 0	0.04 (1)

DESIGN CRITERIA

SPECIFIED LOADS:

TOP CH.	LL	=	21.0	PSF
	DL	=	3.0	PSF
BOT CH.	LL	=	0.0	PSF
	DL	=	7.0	PSF
TOTAL LOAD		=	31.0	PSF

SPACING = 24.0 IN. C/C

LOADING IN FLAT SECTION BASED ON A SLOPE OF 2.00/12 MINIMUM

THIS TRUSS IS DESIGNED FOR RESIDENTIAL OR SMALL BUILDING REQUIREMENTS OF PART 9, NBCC 2010

THIS DESIGN COMPLIES WITH:
- PART 9 OF OBC 2012 , BCBC 2012 , ABC 2014
- CSA 086-09
- TPIC 2011

(65 % OF 23.0 P.S.F. G.S.L. PLUS 8.4 P.S.F. RAIN LOAD EQUALS 21.0 P.S.F. SPECIFIED ROOF LIVE LOAD

CSI: TC=0.47 (C-D:1) , BC=0.15 (I-J:4) , WB=0.13 (D-I:1) , SSI=0.22 (C-D:1)

DOL LUMBER=1.00 NAIL=1.00 LS BEND=1.10 COMP=1.10 SHEAR=1.10 TENS= 1.10

COMPANION LIVE LOAD FACTOR = 0.60

TRUSS PLATE MANUFACTURER IS NOT RESPONSIBLE FOR QUALITY CONTROL IN THE TRUSS MANUFACTURING PLANT .

NAIL VALUES

PLATE	GRIP(DRY) (PSI) MAX	MIN	SHEAR (PLI) MAX	MIN	SECTION (PLI) MAX	MIN
MT20	618	354	1667	822	2284	1656

PLATE PLACEMENT TOL. = 0.250 Inches

PLATE ROTATION TOL. = 6.0 Deg.

JSI GRIP= 0.80 (B) (INPUT = 0.90)
JSI METAL= 0.23 (I) (INPUT = 1.00)

LICENSED PROFESSIONAL ENGINEER
07.17.2015
R. TURENNE
100157040
PROVINCE OF ONTARIO

A-1507385T

JOB NAME	TRUSS NAME	QUANTITY	PLY	JOB DESC.	DRWG NO.
253635	H01-Cond3	2	1	TRUSS DESC.	

Alpa Roof Truss, Maple

Version 7.620 S Apr 15 2015 MiTek Industries, Inc. Fri Jul 17 13:36:42 2015 Page 1
ID:AyrJx9Y?fa2EXF7DRQxSq4zMEz1-E02?cJNMMkgoKiCRfpOx00NXo87IXfkH9l6U9oyx9Z.
Scale = 1:60.4

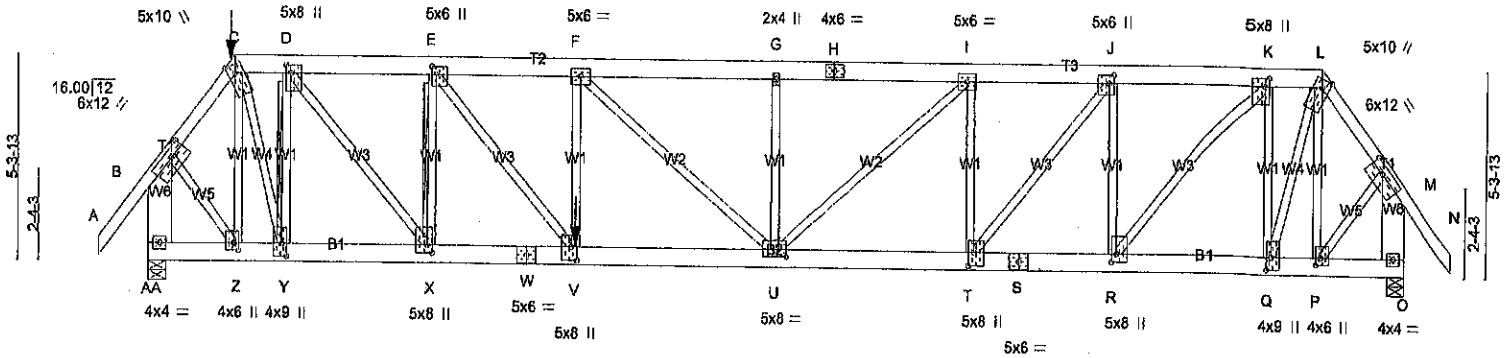

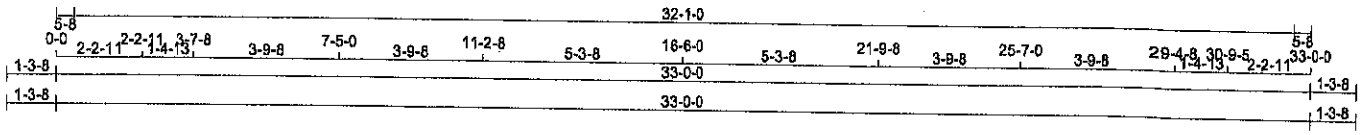

TOTAL WEIGHT = 2 X 209 = 417 lb
[M]

LUMBER
N. L. G. A. RULES

CHORDS	SIZE		LUMBER	DESCR.
A - C	2x4	DRY	No.2	SPF
C - H	2x6	DRY	No.2	SPF
H - L	2x6	DRY	No.2	SPF
L - N	2x4	DRY	No.2	SPF
AA- B	2x8	DRY	No.2	SPF
O - M	2x8	DRY	No.2	SPF
AA- W	2x6	DRY	No.2	SPF
W - S	2x6	DRY	No.2	SPF
S - O	2x6	DRY	No.2	SPF
ALL WEBS EXCEPT	2x3	DRY	No.2	SPF

DRY: SEASONED LUMBER.

PLATES (table is in inches)

JT	TYPE	PLATES	W	LEN	Y	X
B	TMVW-t	MT20	6.0	12.0	2.25	4.75
C	TTWW+m	MT20	5.0	10.0	2.50	2.25
D	TMWW+t	MT20	5.0	8.0	2.50	1.50
E	TMWW+t	MT20	5.0	6.0	2.50	1.50
F	TMWW-t	MT20	5.0	6.0		
G	TMW+w	MT20	2.0	4.0		
H	TS-t	MT20	4.0	6.0		
I	TMWW-t	MT20	5.0	6.0		
J	TMWW+t	MT20	5.0	6.0	2.50	1.50
K	TMWW+t	MT20	5.0	8.0	2.50	1.50
L	TTWW+m	MT20	5.0	10.0	2.50	2.25
M	TMVW-t	MT20	6.0	12.0	2.25	4.75
O	BMV1-l	MT20	4.0	4.0		
P	BMWW+t	MT20	4.0	6.0	2.25	1.50
Q	BMWW+t	MT20	4.0	9.0	4.00	1.50
R	BMWW+t	MT20	5.0	8.0	2.50	1.50
S	BS-t	MT20	5.0	6.0		
T	BMWW+t	MT20	5.0	8.0	4.25	1.75
U	BMWWW-t	MT20	5.0	8.0	2.25	4.00
V	BMWW+t	MT20	5.0	8.0	4.25	1.75
W	BS-t	MT20	5.0	6.0		
X	BMWW+t	MT20	5.0	8.0	2.50	1.50
Y	BMWW+t	MT20	4.0	9.0	4.00	1.50
Z	BMWW+t	MT20	4.0	6.0	2.25	1.50

LICENSED PROFESSIONAL ENGINEER
07/17/2015
R. TURENNE
100157040
PROVINCE OF ONTARIO

DIMENSIONS, SUPPORTS AND LOADINGS SPECIFIED BY FABRICATOR TO BE VERIFIED BY BUILDING DESIGNER

BEARINGS

JT	FACTORED GROSS REACTION VERT	HORZ	MAXIMUM FACTORED GROSS REACTION DOWN	HORZ	UPLIFT	INPUT BRG IN-SX	REQRD BRG IN-SX
AA	3864	0	3864	0	0	5-8	5-5
O	2518	0	2518	0	0	5-8	2-12

UNFACTORED REACTIONS

JT	1ST LCASE COMBINED	MAX./MIN. COMPONENT REACTIONS SNOW	LIVE	PERM.LIVE	WIND	DEAD	SOIL
AA	2721	1851 / 0	0 / 0	0 / 0	0 / 0	870 / 0	0 / 0
O	1772	1214 / 0	0 / 0	0 / 0	0 / 0	558 / 0	0 / 0

BEARING MATERIAL TO BE SPF NO.2 OR BETTER AT JOINT(S) AA, O

BRACING
TOP CHORD TO BE SHEATHED OR MAX. PURLIN SPACING = 3.14FT.
MAX. UNBRACED BOTTOM CHORD LENGTH = 10.00FT. OR RIGID CEILING DIRECTLY APPLIED.

2x4 DRY SPF No.2 T-BRACE REQUIRED AT D-Y, E-X
FASTEN T AND I-BRACES TO NARROW EDGE OF WEB WITH ONE ROW PER PLY OF 3" COMMON WIRE NAILS @ 6" O.C. WITH 3" MINIMUM END DISTANCE. BRACE MUST COVER 90% OF WEB LENGTH.
END VERTICAL(S) MUST BE SHEATHED OR HAVE BRACES AS INDICATED IN THE MAX. UNBRACED LENGTH COLUMN OF THE TABLE BELOW

LOADING
TOTAL LOAD CASES: (4)

CHORDS

MEMB. FR-TO	MAX. FACTORED FORCE (LBS)	FACTORED VERT. LOAD LC1 (PLF) FROM	TO	MAX CSI (LC)	MAX UNBRAC LENGTH
A- B	0 / 40	-70.5	-70.5	0.11 (1)	10.00
B- C	-2966 / 0	-70.5	-70.5	0.19 (1)	3.88
C- D	-2572 / 0	-138.7	-138.7	0.13 (1)	5.04
D- E	-4876 / 0	-138.7	-138.7	0.36 (1)	3.65
E- F	-6522 / 0	-138.7	-138.7	0.43 (1)	3.14
F- G	-5781 / 0	-70.5	-70.5	0.38 (1)	3.39
G- H	-5781 / 0	-70.5	-70.5	0.36 (1)	3.41
H- I	-5781 / 0	-70.5	-70.5	0.36 (1)	3.41
I- J	-4451 / 0	-70.5	-70.5	0.19 (1)	3.99
J- K	-3210 / 0	-70.5	-70.5	0.18 (1)	4.57
K- L	-1652 / 0	-70.5	-70.5	0.09 (1)	6.02
L- M	-1888 / 0	-70.5	-70.5	0.12 (1)	4.77
M- N	0 / 40	-70.5	-70.5	0.11 (1)	10.00
AA- B	-3983 / 0	0.0	0.0	0.29 (1)	6.01
O- M	-2601 / 0	0.0	0.0	0.19 (1)	7.14
AA- Z	0 / 0	-34.5	-34.5	0.27 (1)	10.00
Z- Y	0 / 1759	-34.5	-34.5	0.50 (1)	10.00
Y- X	0 / 2572	-34.5	-34.5	0.43 (1)	10.00
X- W	0 / 4876	-34.5	-34.5	0.76 (1)	10.00
W- V	0 / 4876	-34.5	-34.5	0.76 (1)	10.00
V- U	0 / 6522	-17.5	-17.5	0.97 (1)	10.00
U- T	0 / 4451	-17.5	-17.5	0.63 (1)	10.00
T- S	0 / 3210	-17.5	-17.5	0.45 (1)	10.00
S- R	0 / 3210	-17.5	-17.5	0.45 (1)	10.00
R- Q	0 / 1852	-17.5	-17.5	0.27 (1)	10.00
Q- P	0 / 1120	-17.5	-17.5	0.32 (1)	10.00
P- O	0 / 0	-17.5	-17.5	0.18 (1)	10.00

WEBS

MEMB. FR-TO	MAX. FACTORED FORCE (LBS)	MAX CSI (LC)
Z- C	-836 / 0	0.32 (1)
C- Y	0 / 2935	0.73 (1)
Y- D	-3147 / 0	0.69 (1)
D- X	0 / 3746	0.93 (1)
X- E	-2729 / 0	0.60 (1)
E- V	0 / 2676	0.66 (1)
V- F	0 / 279	0.07 (1)
F- U	-1005 / 0	0.96 (1)
U- G	-407 / 0	0.15 (1)
U- I	0 / 1806	0.45 (1)
T- I	-1526 / 0	0.58 (1)
T- J	0 / 2018	0.50 (1)
R- J	-1908 / 0	0.72 (1)
R- K	0 / 2533	0.63 (1)
Q- K	-2057 / 0	0.78 (1)
Q- L	0 / 1920	0.48 (1)
P- L	-539 / 0	0.20 (1)
B- Z	0 / 2281	0.56 (1)
P- M	0 / 1453	0.36 (1)

FACTORED CONCENTRATED LOADS (LBS)

JT	LOC.	LC1	MAX-	MAX+	FACE	DIR.	TYPE
C	2-2-11	-114	-114	—	FRONT	VERT	TOTAL
V	11-2-8	-2365	-2365	—	FRONT	VERT	TOTAL

DESIGN CRITERIA

*** SPECIAL LOADS ANALYSIS ***
GEOMETRY AND/OR BASIC LOADS CHANGED BY USER.
LOADS WERE DERIVED FROM USER INPUT
NO FURTHER MODIFICATIONS WERE MADE

SPECIFIED LOADS:

TOP CH.	LL	=	21.0	PSF
	DL	=	3.0	PSF
BOT CH.	LL	=	0.0	PSF
	DL	=	7.0	PSF
TOTAL LOAD		=	31.0	PSF

SPACING = 24.0 IN. C/C

LOADING IN FLAT SECTION BASED ON A SLOPE OF 2.00/12 MINIMUM

GIRDER TYPE: CPrimeHip
SIDE SETBACK = 2-2-11
END SETBACK = 5-10-8
END WALL WIDTH = 0-0
CORNER FRAMING TYPE: CONVENTIONAL
END JACK TYPE: CONVENTIONAL
APPLIED TO FRONT SIDE
- ADDT'L LOADS BASED ON 55 % OF GSL.
LOADS APPLIED TO FIRST 11-2-8 OF SPAN MEASURED FROM THE LEFT.

*** NON STANDARD GIRDER ***
ADDT'L USER-DEFINED LOADS APPLIED TO ALL LOAD CASES.

THIS TRUSS IS DESIGNED FOR RESIDENTIAL OR SMALL BUILDING REQUIREMENTS OF PART 9, NBCC 2010

THIS DESIGN COMPLIES WITH:
- PART 9 OF OBC 2012 , BCBC 2012 , ABC 2014
- CSA 086-09
- TPIC 2011

(55 % OF 23.0 P.S.F. G.S.L. PLUS
8.4 P.S.F. RAIN LOAD EQUALS
21.0 P.S.F. SPECIFIED ROOF LIVE LOAD

ALLOWABLE DEFL.(LL)= L/360 (1.10")
CALCULATED VERT. DEFL.(LL) = L/ 999 (0.26")
ALLOWABLE DEFL.(TL)= L/360 (1.10")
CALCULATED VERT. DEFL.(TL) = L/ 838 (0.47")

CSI: TC=0.43 (E-F:1) , BC=0.97 (U-V:1) , WB=0.96 (F-U:1) , SSI=0.26 (Y-Z:1)

DOL LUMBER=1.00 NAIL=1.00 LS BEND=1.00 COMP=1.00 SHEAR=1.00 TENS= 1.00

COMPANION LIVE LOAD FACTOR = 0.60

AUTOSOLVE HEELS OFF

TRUSS PLATE MANUFACTURER IS NOT RESPONSIBLE FOR QUALITY CONTROL IN THE TRUSS MANUFACTURING PLANT .

A-15073857

CONTINUED ON PAGE 2

PLATES (table is in inches)

JT	TYPE	PLATES	W	LEN	Y	X
AA	BMV1-I	MT20	4.0	4.0		

HANGERS NOTES

1) SPECIAL HANGER(S) OR CONNECTION(S) REQUIRED TO SUPPORT CONCENTRATED LOAD(S) 114.2 lbs FACTORED DOWN AT 2-2-11 ON TOP CHORD, AND 2364.6 lbs FACTORED DOWN AT 11-2-8 ON BOTTOM CHORD. DESIGN FOR UNSPECIFIED CONNECTION(S) IS DELEGATED TO THE BUILDING DESIGNER.

NOTES- (1)

1) Lateral brace(s) shown shall be 1x4 for Part 9 design as per OBC 9.23.13.11, and no less than 2x4 for Part 4 design.

NAIL VALUES

PLATE	GRIP(DRY) (PSI) MAX	MIN	SHEAR (PLI) MAX	MIN	SECTION (PLI) MAX	MIN
MT20	618	354	1667	822	2284	1658

PLATE PLACEMENT TOL. = 0.250 Inches

PLATE ROTATION TOL. = 5.0 Deg.

JSI GRIP= 0.90 (D) (INPUT = 0.90)
JSI METAL= 0.85 (W) (INPUT = 1.00)

LICENSED PROFESSIONAL ENGINEER
07.17.2015
R. TURENNE
100157049
PROVINCE OF ONTARIO

A-N073850(2)

JOB NAME	TRUSS NAME	QUANTITY	PLY	JOB DESC.	DRWG NO.
253635	H01-Cond1	2	1	TRUSS DESC.	

Alpa Roof Truss, Maple

Version 7.620 S Apr 15 2015 MiTek Industries, Inc. Fri Jul 17 13:36:42 2015 Page 1
ID:AyrJx9Y?fa2EXF7DRQxSq4zMEz1-E02?cJNMMkgoKiCRfpOx00NX98ChXhaH9l6U9oyx9Z.
Scale = 1:60.4

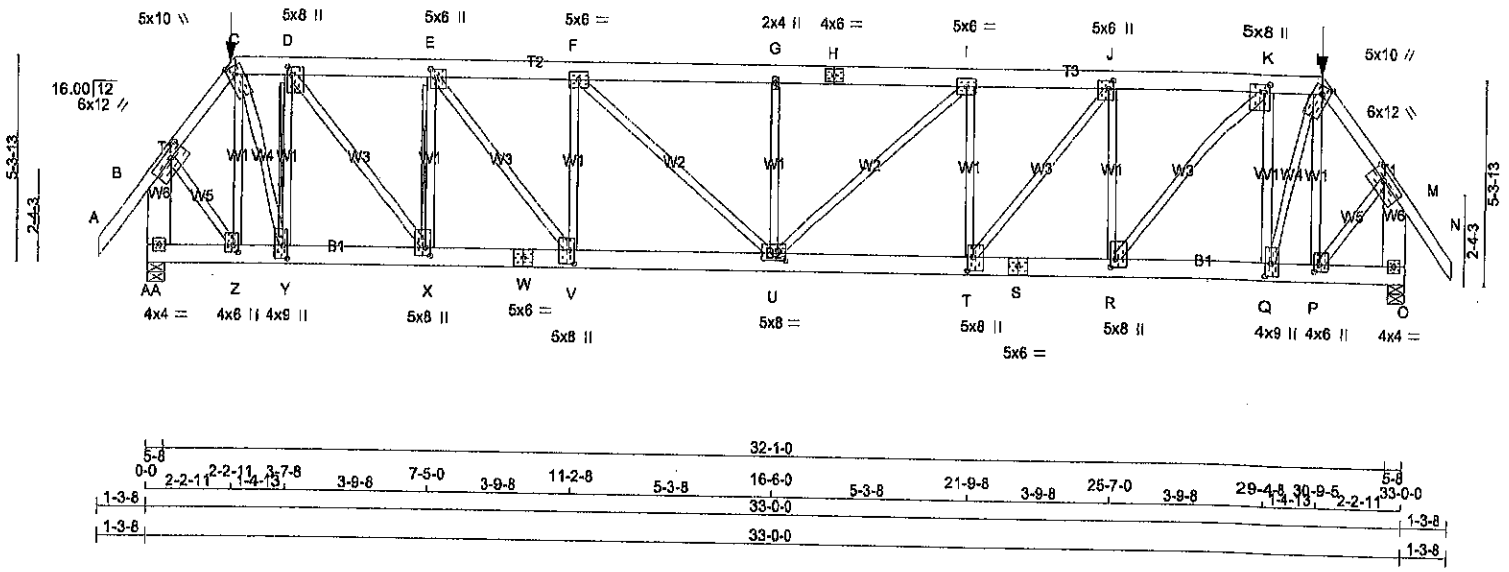

TOTAL WEIGHT = 2 X 209 = 417 lb
[M]

LUMBER
N. L. G. A. RULES

CHORDS	SIZE		LUMBER	DESCR.
A - C	2x4	DRY	No.2	SPF
C - H	2x6	DRY	No.2	SPF
H - L	2x6	DRY	No.2	SPF
L - N	2x4	DRY	No.2	SPF
AA- B	2x6	DRY	No.2	SPF
O - M	2x6	DRY	No.2	SPF
AA- W	2x6	DRY	No.2	SPF
W - S	2x6	DRY	No.2	SPF
S - O	2x6	DRY	No.2	SPF
ALL WEBS EXCEPT	2x3	DRY	No.2	SPF

DRY: SEASONED LUMBER.

PLATES (table is in inches)

JT	TYPE	PLATES	W	LEN	Y	X
B	TMVW-t	MT20	6.0	12.0	2.26	4.75
C	TTWW+m	MT20	5.0	10.0	2.50	2.25
D	TMWW+t	MT20	6.0	8.0	2.50	1.50
E	TMWW+t	MT20	5.0	6.0	2.50	1.50
F	TMWW-t	MT20	5.0	6.0		
G	TMW+w	MT20	2.0	4.0		
H	TS-t	MT20	4.0	6.0		
I	TMWW-t	MT20	5.0	6.0		
J	TMWW+t	MT20	5.0	6.0	2.50	1.50
K	TMWW+t	MT20	5.0	8.0	2.50	1.50
L	TTWW+m	MT20	5.0	10.0	2.50	2.25
M	TMVW-t	MT20	6.0	12.0	2.26	4.75
O	BMV1-l	MT20	4.0	4.0		
P	BMWW+t	MT20	4.0	6.0	2.25	1.50
Q	BMWW+t	MT20	4.0	9.0	4.00	1.50
R	BMWW+t	MT20	5.0	8.0	2.50	1.50
S	BS-t	MT20	5.0	6.0		
T	BMWW+t	MT20	5.0	8.0	4.25	1.75
U	BMWWW-t	MT20	5.0	8.0	2.25	4.00
V	BMWW+t	MT20	5.0	8.0	4.25	1.75
W	BS-t	MT20	5.0	6.0		
X	BMWW+t	MT20	6.0	8.0	2.50	1.50
Y	BMWW+t	MT20	4.0	9.0	4.00	1.50
Z	BMWW+t	MT20	4.0	6.0	2.25	1.50

LICENSED PROFESSIONAL ENGINEER
07/17/2015
R. TURENNE
100157040
PROVINCE OF ONTARIO

DIMENSIONS, SUPPORTS AND LOADINGS SPECIFIED BY FABRICATOR TO BE VERIFIED BY BUILDING DESIGNER

BEARINGS

JT	FACTORED GROSS REACTION VERT	HORZ	MAXIMUM FACTORED GROSS REACTION DOWN	HORZ	UPLIFT	INPUT BRG IN-SX	REQRD BRG IN-SX
AA	2919	0	2919	0	0	5-8	3-3
O	2919	0	2919	0	0	5-8	3-3

UNFACTORED REACTIONS

JT	1ST LCASE COMBINED	MAX./MIN. COMPONENT REACTIONS SNOW	LIVE	PERM.LIVE	WIND	DEAD	SOIL
AA	2055	1400 / 0	0 / 0	0 / 0	0 / 0	655 / 0	0 / 0
O	2055	1400 / 0	0 / 0	0 / 0	0 / 0	655 / 0	0 / 0

BEARING MATERIAL TO BE SPF NO.2 OR BETTER AT JOINT(S) AA, O

BRACING
TOP CHORD TO BE SHEATHED OR MAX. PURLIN SPACING = 3.60FT.
MAX. UNBRACED BOTTOM CHORD LENGTH = 10.00FT. OR RIGID CEILING DIRECTLY APPLIED.

2x4 DRY SPF No.2 T-BRACE REQUIRED AT D-Y, E-X
FASTEN T AND I-BRACES TO NARROW EDGE OF WEB WITH ONE ROW PER PLY OF 3" COMMON WIRE NAILS @ 6" O.C. WITH 3" MINIMUM END DISTANCE. BRACE MUST COVER 90% OF WEB LENGTH.
END VERTICAL(S) MUST BE SHEATHED OR HAVE BRACES AS INDICATED IN THE MAX. UNBRACED LENGTH COLUMN OF THE TABLE BELOW

LOADING
TOTAL LOAD CASES: (4)

CHORDS

MEMB. FR-TO	MAX. FACTORED FORCE (LBS)	FACTORED VERT. LOAD LC1 (PLF) FROM	TO	MAX CSI (LC)	MAX UNBRAC LENGTH
A- B	0 / 40	-70.5	-70.5	0.11 (1)	10.00
B- C	-2195 / 0	-70.5	-70.5	0.14 (1)	4.47
C- D	-1887 / 0	-138.7	-138.7	0.08 (1)	5.75
D- E	-3427 / 0	-138.7	-138.7	0.25 (1)	4.38
E- F	-4410 / 0	-138.7	-138.7	0.28 (1)	3.91
F- G	-4930 / 0	-138.7	-138.7	0.40 (1)	3.60
G- H	-4930 / 0	-138.7	-138.7	0.40 (1)	3.60
H- I	-4930 / 0	-138.7	-138.7	0.40 (1)	3.60
I- J	-4410 / 0	-138.7	-138.7	0.28 (1)	3.91
J- K	-3427 / 0	-138.7	-138.7	0.25 (1)	4.38
K- L	-1887 / 0	-138.7	-138.7	0.08 (1)	5.75
L- M	-2195 / 0	-70.5	-70.5	0.14 (1)	4.47
M- N	0 / 40	-70.5	-70.5	0.11 (1)	10.00
AA- B	-2993 / 0	0.0	0.0	0.22 (1)	6.76
O- M	-2993 / 0	0.0	0.0	0.22 (1)	6.76
AA- Z	0 / 0	-34.5	-34.5	0.20 (1)	10.00
Z- Y	0 / 1302	-34.5	-34.5	0.37 (1)	10.00
Y- X	0 / 1887	-34.5	-34.5	0.32 (1)	10.00
X- W	0 / 3427	-34.5	-34.5	0.49 (1)	10.00
W- V	0 / 3427	-34.5	-34.5	0.49 (1)	10.00
V- U	0 / 4410	-34.5	-34.5	0.66 (1)	10.00
U- T	0 / 4410	-34.5	-34.5	0.66 (1)	10.00
T- S	0 / 3427	-34.5	-34.5	0.49 (1)	10.00
S- R	0 / 3427	-34.5	-34.5	0.49 (1)	10.00
R- Q	0 / 1887	-34.5	-34.5	0.32 (1)	10.00
Q- P	0 / 1302	-34.5	-34.5	0.37 (1)	10.00
P- O	0 / 0	-34.5	-34.5	0.20 (1)	10.00

WEBS

MEMB. FR-TO	MAX. FACTORED FORCE (LBS)	MAX CSI (LC)
Z- C	-617 / 0	0.23 (1)
C- Y	0 / 2114	0.52 (1)
Y- D	-2229 / 0	0.49 (1)
D- X	0 / 2504	0.62 (1)
X- E	-1822 / 0	0.40 (1)
E- V	0 / 1597	0.40 (1)
V- F	-1105 / 0	0.42 (1)
F- U	0 / 707	0.17 (1)
U- G	-770 / 0	0.29 (1)
U- I	0 / 707	0.17 (1)
T- I	-1105 / 0	0.42 (1)
T- J	0 / 1597	0.40 (1)
R- J	-1822 / 0	0.69 (1)
R- K	0 / 2504	0.62 (1)
Q- K	-2229 / 0	0.85 (1)
Q- L	0 / 2114	0.52 (1)
P- L	-617 / 0	0.23 (1)
B- Z	0 / 1688	0.42 (1)
P- M	0 / 1688	0.42 (1)

FACTORED CONCENTRATED LOADS (LBS)

JT	LOC.	LC1	MAX-	MAX+	FACE	DIR.	TYPE
C	2-2-11	-114	-114	—	FRONT	VERT	TOTAL
L	30-9-5	-114	-114	—	FRONT	VERT	TOTAL

DESIGN CRITERIA

SPECIFIED LOADS:

TOP CH.	LL	=	21.0	PSF
	DL	=	3.0	PSF
BOT CH.	LL	=	0.0	PSF
	DL	=	7.0	PSF
TOTAL LOAD		=	31.0	PSF

SPACING = 24.0 IN. C/C

LOADING IN FLAT SECTION BASED ON A SLOPE OF 2.00/12 MINIMUM

GIRDER TYPE: CPrimeHip
SIDE SETBACK = 2-2-11
END SETBACK = 5-10-8
END WALL WIDTH = 0-0
CORNER FRAMING TYPE: CONVENTIONAL
END JACK TYPE: CONVENTIONAL
APPLIED TO FRONT SIDE
- ADDT'L LOADS BASED ON 55 % OF GSL.

THIS TRUSS IS DESIGNED FOR RESIDENTIAL OR SMALL BUILDING REQUIREMENTS OF PART 9, NBCC 2010

THIS DESIGN COMPLIES WITH:
- PART 9 OF OBC 2012 , BCBC 2012 , ABC 2014
- CSA 086-09
- TPIC 2011

(55 % OF 23.0 P.S.F. G.S.L. PLUS 8.4 P.S.F. RAIN LOAD EQUALS 21.0 P.S.F. SPECIFIED ROOF LIVE LOAD

ALLOWABLE DEFL.(LL)= L/360 (1.10")
CALCULATED VERT. DEFL.(LL) = L/ 999 (0.21")
ALLOWABLE DEFL.(TL)= L/360 (1.10")
CALCULATED VERT. DEFL.(TL) = L/ 999 (0.38")

CSI: TC=0.40 (G-I:1) , BC=0.66 (T-U:1) , WB=0.85 (K-Q:1) , SSI=0.26 (F-G:1)

DOL LUMBER=1.00 NAIL=1.00 LS BEND=1.00 COMP=1.00 SHEAR=1.00 TENS= 1.00

COMPANION LIVE LOAD FACTOR = 0.50

AUTOSOLVE HEELS OFF

TRUSS PLATE MANUFACTURER IS NOT RESPONSIBLE FOR QUALITY CONTROL IN THE TRUSS MANUFACTURING PLANT .

NAIL VALUES

PLATE	GRIP(DRY) (PSI) MAX	MIN	SHEAR (PLI) MAX	MIN	SECTION (PLI) MAX	MIN
MT20	818	354	1687	822	2284	1656

PLATE PLACEMENT TOL. = 0.250 Inches

PLATE ROTATION TOL. = 5.0 Deg.

JSI GRIP= 0.70 (H) (INPUT = 0.90)
JSI METAL= 0.55 (W) (INPUT = 1.00)

A-N0738449

CONTINUED ON PAGE 2

JOB NAME	TRUSS NAME	QUANTITY	PLY	JOB DESC.	DRWG NO.
253635	H01-Cond1	2	1	TRUSS DESC.	

Alpa Roof Truss, Maple

PLATES (table is in inches)

JT	TYPE	PLATES	W	LEN	Y	X
AA	BMV1-I	MT20	4.0	4.0		

HANGERS NOTES

1) SPECIAL HANGER(S) OR CONNECTION(S) REQUIRED TO SUPPORT CONCENTRATED LOAD(S) 114.2 lbs FACTORED DOWN AT 30-9-5, AND 114.2 lbs FACTORED DOWN AT 2-2-11 ON TOP CHORD. DESIGN FOR UNSPECIFIED CONNECTION(S) IS DELEGATED TO THE BUILDING DESIGNER.

NOTES- (1)

1) Lateral brace(s) shown shall be 1x4 for Part 9 design as per OBC 9.23.13.11, and no less than 2x4 for Part 4 design.

LICENSED PROFESSIONAL ENGINEER
07.17.2015
R. TURENNE
100157040
PROVINCE OF ONTARIO

A-1073849(2)

JOB NAME	TRUSS NAME	QUANTITY	PLY	JOB DESC.	DRWG NO.
253626	H03T	1	1	TRUSS DESC.	

Alpa Roof Truss, Maple

Version 7.820 S Apr 16 2015 MiTek Industries, Inc. Thu Jul 16 16:55:06 2015 Page 1
ID:AyrJx9Y?fa2EXF7DRQxSq4zMEz1-SDjRXYqdGrzvzG9uibJtMIJ_goLuU_XB7qcLUTiyxRI
Scale = 1:61.4

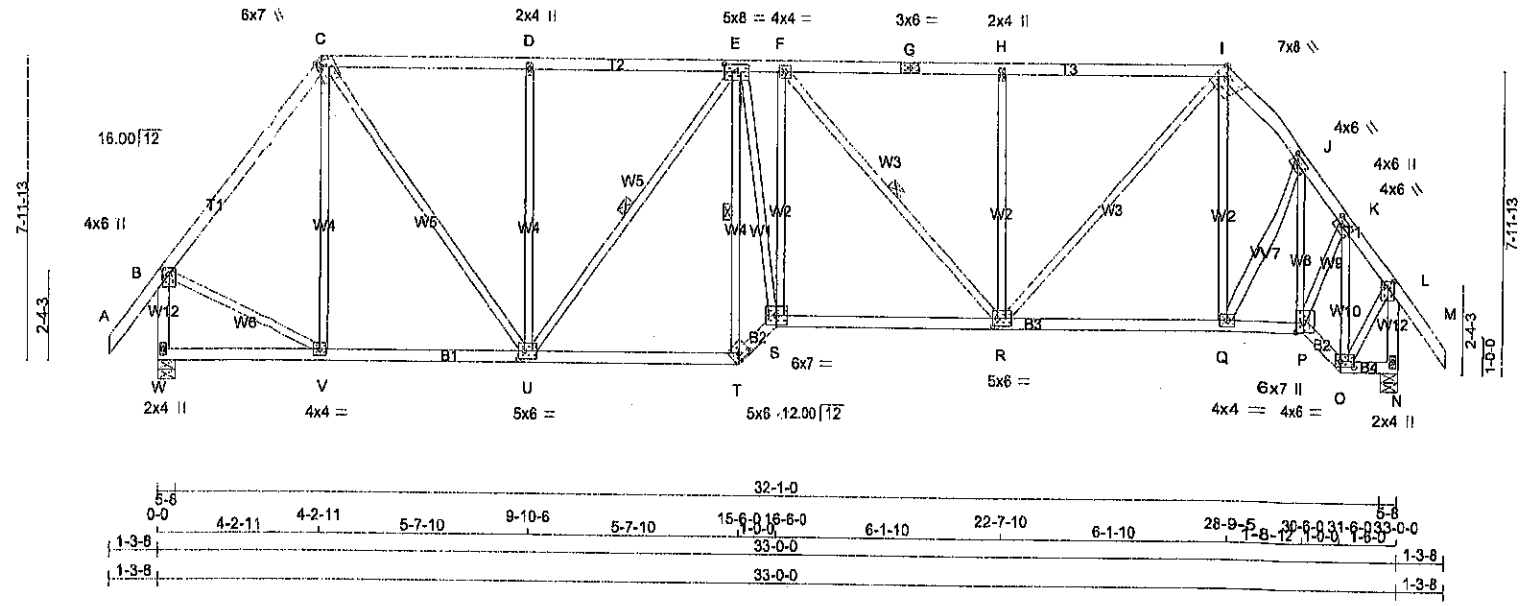

TOTAL WEIGHT = 179 lb
[M]

LUMBER
N. L. G. A. RULES

CHORDS	SIZE		LUMBER	DESCR.
A - C	2x4	DRY	No.2	SPF
C - G	2x4	DRY	No.2	SPF
G - I	2x4	DRY	No.2	SPF
I - M	2x4	DRY	No.2	SPF
W - B	2x4	DRY	No.2	SPF
N - L	2x4	DRY	No.2	SPF
W - T	2x4	DRY	No.2	SPF
T - S	2x4	DRY	No.2	SPF
S - P	2x4	DRY	No.2	SPF
P - O	2x4	DRY	No.2	SPF
O - N	2x4	DRY	No.2	SPF
ALL WEBS EXCEPT	2x3	DRY	No.2	SPF

DRY: SEASONED LUMBER.

PLATES (table is in inches)

JT	TYPE	PLATES	W	LEN	Y	X
B	TMVW+p	MT20	4.0	6.0	2.00	2.00
C	TTWW+m	MT20	6.0	7.0	Edge	1.50
D	TMW+w	MT20	2.0	4.0		
E	TMWWW-t	MT20	5.0	8.0	2.26	4.00
F	TMWW-t	MT20	4.0	4.0		
G	TS-t	MT20	3.0	6.0		
H	TMW+w	MT20	2.0	4.0		
I	TTWW-h	MT20	7.0	8.0	Edge	2.75
J	TMWW-t	MT20	4.0	6.0	2.00	2.50
K	TMWW-t	MT20	4.0	6.0	2.00	2.50
L	TMVW+p	MT20	4.0	6.0	2.00	2.00
N	BMV1+p	MT20	2.0	4.0		
O	BBWW-t	MT20	4.0	6.0	1.75	4.25
P	BBWW+p	MT20	6.0	7.0	3.25	2.75
Q	BMWW-t	MT20	4.0	4.0		
R	BMWWW-t	MT20	5.0	6.0	2.50	1.50
S	BBWW-t	MT20	6.0	7.0		
T	BBW-h	MT20	6.0	6.0	2.00	3.25
U	BMWWW-t	MT20	5.0	6.0	2.50	2.00
V	BMWW-t	MT20	4.0	4.0		
W	BMV1+p	MT20	2.0	4.0		

LICENSED PROFESSIONAL ENGINEER
07-16-2015
R. TURENNE
100157040
PROVINCE OF ONTARIO

DIMENSIONS, SUPPORTS AND LOADINGS SPECIFIED BY FABRICATOR TO BE VERIFIED BY BUILDING DESIGNER

BEARINGS

JT	FACTORED GROSS REACTION VERT	HORZ	MAXIMUM FACTORED GROSS REACTION DOWN	HORZ	UPLIFT	INPUT BRG IN-SX	REQRD BRG IN-SX
W	1548	0	1548	0	0	5-8	1-11
N	1553	0	1553	0	0	5-8	1-11

UNFACTORED REACTIONS

JT	1ST LCASE COMBINED	MAX./MIN. COMPONENT REACTIONS SNOW	LIVE	PERM.LIVE	WIND	DEAD	SOIL
W	1089	750 / 0	0 / 0	0 / 0	0 / 0	338 / 0	0 / 0
N	1091	753 / 0	0 / 0	0 / 0	0 / 0	339 / 0	0 / 0

BEARING MATERIAL TO BE SPF NO.2 OR BETTER AT JOINT(S) W, N

BRACING
TOP CHORD TO BE SHEATHED OR MAX. PURLIN SPACING = 4.66FT.
MAX. UNBRACED BOTTOM CHORD LENGTH = 10.00FT. OR RIGID CEILING DIRECTLY APPLIED.

1 LATERAL BRACE(S) REQUIRED AT 1/ 2 LENGTH OF E-U, E-T, F-R.
END VERTICAL(S) MUST BE SHEATHED OR HAVE BRACES AS INDICATED IN THE MAX. UNBRACED LENGTH COLUMN OF THE TABLE BELOW

LOADING
TOTAL LOAD CASES: (4)

CHORDS

MEMB. FR-TO	MAX. FACTORED FORCE (LBS)	FACTORED VERT. LOAD LC1 (PLF) FROM	TO	MAX CSI (LC)	MAX UNBRAC LENGTH
A- B	0 / 40	-70.5	-70.5	0.10 (1)	10.00
B- C	-1186 / 0	-70.5	-70.5	0.27 (1)	5.57
C- D	-1337 / 0	-70.5	-70.5	0.37 (1)	5.16
D- E	-1337 / 0	-70.5	-70.5	0.37 (1)	5.16
E- F	-1806 / 0	-70.5	-70.5	0.23 (1)	4.74
F- G	-1587 / 0	-70.5	-70.5	0.49 (1)	4.66
G- H	-1587 / 0	-70.5	-70.5	0.49 (1)	4.66
H- I	-1587 / 0	-70.5	-70.5	0.50 (1)	4.66
I- J	-1360 / 0	-70.5	-70.5	0.05 (1)	5.54
J- K	-1268 / 0	-70.5	-70.5	0.05 (1)	5.66
K- L	-896 / 0	-70.5	-70.5	0.10 (1)	6.25
L- M	0 / 40	-70.5	-70.5	0.10 (1)	10.00
W- B	-1521 / 0	0.0	0.0	0.19 (1)	6.67
N- L	-1539 / 0	0.0	0.0	0.20 (1)	6.63
W- V	0 / 0	-17.5	-17.5	0.09 (4)	10.00
V- U	0 / 705	-17.5	-17.5	0.19 (4)	10.00
U- T	0 / 1568	-17.5	-17.5	0.32 (1)	10.00
T- S	0 / 2190	-17.5	-17.5	0.35 (1)	10.00
S- R	0 / 1605	-17.5	-17.5	0.37 (1)	10.00
R- Q	0 / 803	-17.5	-17.5	0.23 (4)	10.00
Q- P	0 / 777	-17.5	-17.5	0.18 (1)	10.00
P- O	0 / 873	-17.5	-17.5	0.11 (1)	10.00
O- N	0 / 0	-17.5	-17.5	0.01 (4)	10.00

WEBS

MEMB. FR-TO	MAX. FACTORED FORCE (LBS)	MAX CSI (LC)
V- C	-224 / 0	0.27 (1)
C- U	0 / 1068	0.24 (1)
U- D	-439 / 0	0.53 (1)
U- E	-396 / 0	0.25 (1)
T- E	-1490 / 0	0.60 (1)
E- S	0 / 1574	0.35 (1)
S- F	0 / 61	0.02 (4)
F- R	-326 / 0	0.16 (1)
R- H	-496 / 0	0.41 (1)
R- I	0 / 1156	0.26 (1)
Q- I	0 / 58	0.02 (4)
Q- J	0 / 69	0.02 (1)
P- J	-255 / 0	0.09 (1)
P- K	0 / 803	0.18 (1)
O- K	-1106 / 0	0.29 (1)
B- V	0 / 777	0.17 (1)
O- L	0 / 825	0.19 (1)

DESIGN CRITERIA

SPECIFIED LOADS:

TOP CH.	LL	=	21.0	PSF
	DL	=	3.0	PSF
BOT CH.	LL	=	0.0	PSF
	DL	=	7.0	PSF
TOTAL LOAD		=	31.0	PSF

SPACING = 24.0 IN. C/C

LOADING IN FLAT SECTION BASED ON A SLOPE OF 2.00/12 MINIMUM

THIS TRUSS IS DESIGNED FOR RESIDENTIAL OR SMALL BUILDING REQUIREMENTS OF PART 9, NBCC 2010

THIS DESIGN COMPLIES WITH:
- PART 9 OF OBC 2012 , BCBC 2012 , ABC 2014
- CSA 086-09
- TPIC 2011

DESIGN ASSUMPTIONS
-OVERHANG NOT TO BE ALTERED OR CUT OFF.

(55 % OF 23.0 P.S.F. G.S.L. PLUS
8.4 P.S.F. RAIN LOAD EQUALS
21.0 P.S.F. SPECIFIED ROOF LIVE LOAD

ALLOWABLE DEFL.(LL)= L/360 (1.10")
CALCULATED VERT. DEFL.(LL) = L/ 999 (0.11")
ALLOWABLE DEFL.(TL)= L/360 (1.10")
CALCULATED VERT. DEFL.(TL) = L/ 999 (0.22")

CSI: TC=0.60 (H-I:1) , BC=0.37 (R-S:1) , WB=0.60 (E-T:1) , SSI=0.21 (H-I:1)

DOL LUMBER=1.00 NAIL=1.00 LS BEND=1.10
COMP=1.10 SHEAR=1.10 TENS= 1.10

COMPANION LIVE LOAD FACTOR = 0.50

TRUSS PLATE MANUFACTURER IS NOT RESPONSIBLE FOR QUALITY CONTROL IN THE TRUSS MANUFACTURING PLANT .

NAIL VALUES

PLATE	GRIP(DRY) (PSI) MAX	MIN	SHEAR (PLI) MAX	MIN	SECTION (PLI) MAX	MIN
MT20	618	354	1667	822	2284	1656

PLATE PLACEMENT TOL. = 0.250 inches

PLATE ROTATION TOL. = 6.0 Deg.

JSI GRIP= 0.90 (R) (INPUT = 0.90)
JSI METAL= 0.34 (E) (INPUT = 1.00)

A-15073805

JOB NAME	TRUSS NAME	QUANTITY	PLY	JOB DESC.	DRWG NO.
253626	H02T	1	1	TRUSS DESC.	

Alpa Roof Truss, Maple

Version 7.620 S Apr 15 2015 MiTek Industries, Inc. Thu Jul 16 16:55:05 2015 Page 1
ID:AyrJx9Y?fa2EXF7DRQxSq4zMEz1-_093KCp?VXr2L6al1cM7C5RTvyXJF5GzcycxxGyxRI
Scale = 1:61.4

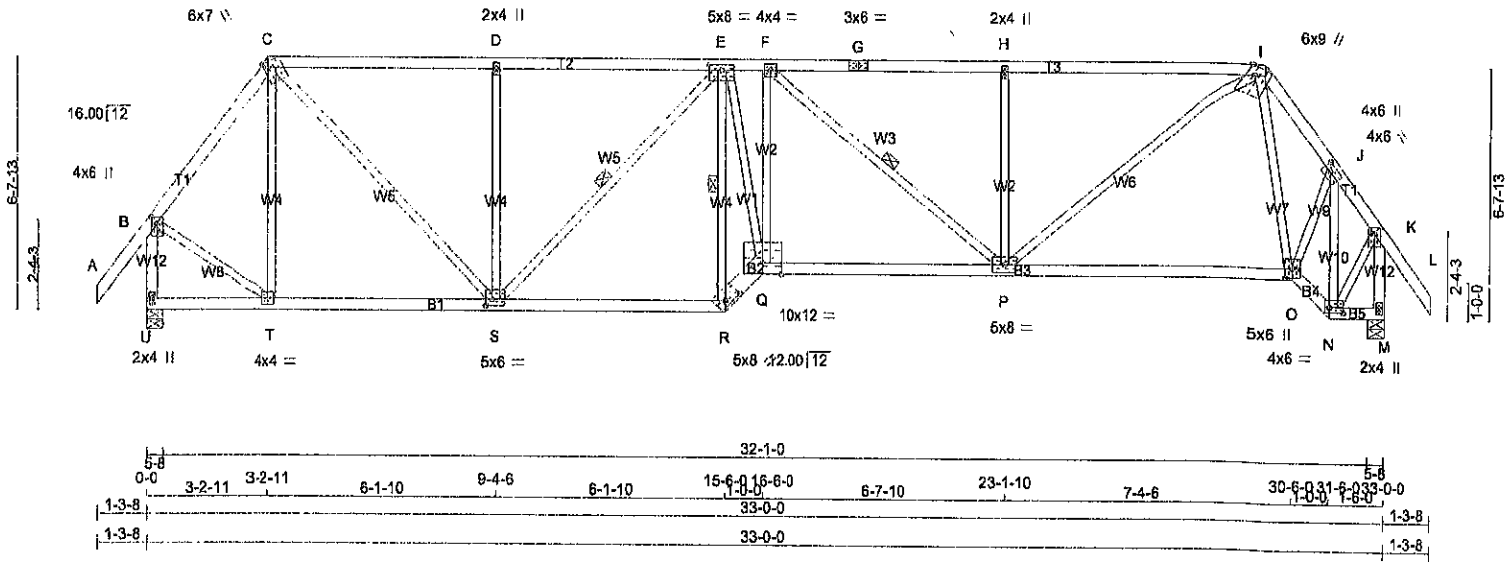

TOTAL WEIGHT = 162 lb
(M)

LUMBER
N. L. G. A. RULES

CHORDS	SIZE		LUMBER	DESCR.
A - C	2x4	DRY	No.2	SPF
C - G	2x4	DRY	No.2	SPF
G - I	2x4	DRY	No.2	SPF
I - L	2x4	DRY	No.2	SPF
U - B	2x4	DRY	No.2	SPF
M - K	2x4	DRY	No.2	SPF
U - R	2x4	DRY	No.2	SPF
R - Q	2x6	DRY	No.2	SPF
Q - O	2x4	DRY	No.2	SPF
O - N	2x4	DRY	No.2	SPF
N - M	2x4	DRY	No.2	SPF
ALL WEBS EXCEPT	2x3	DRY	No.2	SPF

DRY: SEASONED LUMBER.

PLATES (table is in inches)

JT	TYPE	PLATES	W	LEN	Y	X
B	TMVW+p	MT20	4.0	6.0	2.00	2.00
C	TTWW+m	MT20	6.0	7.0	Edge	1.50
D	TMW+w	MT20	2.0	4.0		
E	TMWWW-t	MT20	5.0	8.0	1.75	4.00
F	TMWW-t	MT20	4.0	4.0		
G	TS-t	MT20	3.0	6.0		
H	TMW+w	MT20	2.0	4.0		
I	TTWW+m	MT20	6.0	9.0	Edge	2.00
J	TMWW-t	MT20	4.0	6.0	2.00	2.50
K	TMVW+p	MT20	4.0	6.0	2.00	2.00
M	BMV1+p	MT20	2.0	4.0		
N	BBWW-l	MT20	4.0	6.0	1.75	4.50
O	BBWW+p	MT20	5.0	6.0	2.75	2.25
P	BMWWW-t	MT20	5.0	8.0		
Q	BBWW-l	MT20	10.0	12.0	Edge	
R	BBW-h	MT20	5.0	8.0	1.75	5.00
S	BMWWW-t	MT20	5.0	6.0	2.00	2.00
T	BMWW-t	MT20	4.0	4.0		
U	BMV1+p	MT20	2.0	4.0		

Edge - INDICATES REFERENCE CORNER OF PLATE TOUCHES EDGE OF CHORD.

LICENSED PROFESSIONAL ENGINEER
07-16-2015
R. TURENNE
100157840
PROVINCE OF ONTARIO

DIMENSIONS, SUPPORTS AND LOADINGS SPECIFIED BY FABRICATOR TO BE VERIFIED BY BUILDING DESIGNER

BEARINGS

JT	FACTORED GROSS REACTION VERT	HORZ	MAXIMUM FACTORED GROSS REACTION DOWN	HORZ	UPLIFT	INPUT BRG IN-SX	REQRD BRG IN-SX
U	1548	0	1548	0	0	5-8	1-11
M	1553	0	1553	0	0	5-8	1-11

UNFACTORED REACTIONS

JT	1ST LCASE COMBINED	MAX./MIN. COMPONENT REACTIONS SNOW	LIVE	PERM.LIVE	WIND	DEAD	SOIL
U	1089	750 / 0	0 / 0	0 / 0	0 / 0	339 / 0	0 / 0
M	1091	753 / 0	0 / 0	0 / 0	0 / 0	339 / 0	0 / 0

BEARING MATERIAL TO BE SPF NO.2 OR BETTER AT JOINT(S) U, M

BRACING
TOP CHORD TO BE SHEATHED OR MAX. PURLIN SPACING = 4.14FT.
MAX. UNBRACED BOTTOM CHORD LENGTH = 10.00FT. OR RIGID CEILING DIRECTLY APPLIED.

1 LATERAL BRACE(S) REQUIRED AT 1/2 LENGTH OF E-S, E-R, F-P.
END VERTICAL(S) MUST BE SHEATHED OR HAVE BRACES AS INDICATED IN THE MAX. UNBRACED LENGTH COLUMN OF THE TABLE BELOW

LOADING
TOTAL LOAD CASES: (4)

CHORDS

MEMB. FR-TO	MAX. FACTORED FORCE (LBS)	FACTORED VERT. LOAD (PLF) FROM	TO	LC1	MAX CSI (LC)	MAX UNBRAC LENGTH
A- B	0 / 40	-70.5	-70.5	0.10 (1)	10.00	
B- C	-1144 / 0	-70.5	-70.5	0.16 (1)	5.78	
C- D	-1579 / 0	-70.5	-70.5	0.47 (1)	4.71	
D- E	-1579 / 0	-70.5	-70.5	0.47 (1)	4.71	
E- F	-2268 / 0	-70.5	-70.5	0.28 (1)	4.25	
F- G	-1944 / 0	-70.5	-70.5	0.63 (1)	4.14	
G- H	-1944 / 0	-70.5	-70.5	0.63 (1)	4.14	
H- I	-1944 / 0	-70.5	-70.5	0.63 (1)	4.14	
I- J	-1276 / 0	-70.5	-70.5	0.07 (1)	5.65	
J- K	-894 / 0	-70.5	-70.5	0.10 (1)	6.25	
K- L	0 / 40	-70.5	-70.5	0.10 (1)	10.00	
U- B	-1532 / 0	0.0	0.0	0.20 (1)	6.65	
M- K	-1539 / 0	0.0	0.0	0.20 (1)	6.63	
U- T	0 / 0	-17.5	-17.5	0.09 (4)	10.00	
T- S	0 / 676	-17.5	-17.5	0.21 (4)	10.00	
S- R	0 / 1919	-17.5	-17.5	0.39 (1)	10.00	
R- Q	0 / 2672	-17.5	-17.5	0.32 (1)	10.00	
Q- P	0 / 2286	-17.5	-17.5	0.60 (1)	10.00	
P- O	0 / 781	-17.5	-17.5	0.31 (4)	10.00	
O- N	0 / 677	-17.5	-17.5	0.11 (1)	10.00	
N- M	0 / 0	-17.5	-17.5	0.01 (4)	10.00	

WEBS

MEMB. FR-TO	MAX. FACTORED FORCE (LBS)	MAX CSI (LC)
T- C	-308 / 0	0.23 (1)
C- S	0 / 1296	0.29 (1)
S- D	-481 / 0	0.35 (1)
S- E	-494 / 0	0.26 (1)
R- E	-1808 / 0	0.61 (1)
E- Q	0 / 1943	0.44 (1)
Q- F	0 / 70	0.02 (4)
F- P	-442 / 0	0.21 (1)
P- H	-534 / 0	0.26 (1)
P- I	0 / 1489	0.34 (1)
I- O	-168 / 0	0.08 (1)
O- J	0 / 762	0.17 (1)
N- J	-1112 / 0	0.29 (1)
B- T	0 / 790	0.18 (1)
N- K	0 / 829	0.19 (1)

DESIGN CRITERIA

SPECIFIED LOADS:

TOP CH.	LL	=	21.0	PSF
	DL	=	3.0	PSF
BOT CH.	LL	=	0.0	PSF
	DL	=	7.0	PSF
TOTAL LOAD		=	31.0	PSF

SPACING = 24.0 IN. C/C

LOADING IN FLAT SECTION BASED ON A SLOPE OF 2.00/12 MINIMUM

THIS TRUSS IS DESIGNED FOR RESIDENTIAL OR SMALL BUILDING REQUIREMENTS OF PART 9, NBCC 2010

THIS DESIGN COMPLIES WITH:
- PART 9 OF OBC 2012 , BCBC 2012 , ABC 2014
- CSA 086-09
- TPIC 2011

DESIGN ASSUMPTIONS
-OVERHANG NOT TO BE ALTERED OR CUT OFF.

(55 % OF 23.0 P.S.F. G.S.L. PLUS
8.4 P.S.F. RAIN LOAD EQUALS
21.0 P.S.F. SPECIFIED ROOF LIVE LOAD

ALLOWABLE DEFL.(LL)= L/360 (1.10")
CALCULATED VERT. DEFL.(LL) = L/ 999 (0.14")
ALLOWABLE DEFL.(TL)= L/360 (1.10")
CALCULATED VERT. DEFL.(TL) = L/ 999 (0.27")

CSI: TC=0.63 (H-I:1) , BC=0.50 (P-Q:1) , WB=0.51 (E-R:1) , SSI=0.22 (H-I:1)

DOL LUMBER=1.00 NAIL=1.00 LS BEND=1.10 COMP=1.10 SHEAR=1.10 TENS= 1.10

COMPANION LIVE LOAD FACTOR = 0.50

TRUSS PLATE MANUFACTURER IS NOT RESPONSIBLE FOR QUALITY CONTROL IN THE TRUSS MANUFACTURING PLANT.

NAIL VALUES

PLATE	GRIP(DRY) (PSI) MAX	MIN	SHEAR (PLI) MAX	MIN	SECTION (PLI) MAX	MIN
MT20	618	354	1667	822	2284	1656

PLATE PLACEMENT TOL. = 0.250 Inches

PLATE ROTATION TOL. = 5.0 Deg.

JSI GRIP= 0.90 (I) (INPUT = 0.90)
JSI METAL= 0.42 (E) (INPUT = 1.00)

A-15073804

JOB NAME	TRUSS NAME	QUANTITY	PLY	JOB DESC.	DRWG NO.
253622	H07	2	1	TRUSS DESC.	

Alpa Roof Truss, Maple

Version 7.620 S Apr 15 2015 MiTek Industries, Inc. Thu Jul 16 14:32:01 2015 Page 1
ID:AyrJx9Y?fa2EXF7DRQxSq4zMEz1-KbUyk1wZ25L1WxL wApM8lvwXBhto?xdUjSFifoyxTr
Scale: 3/8"=1'

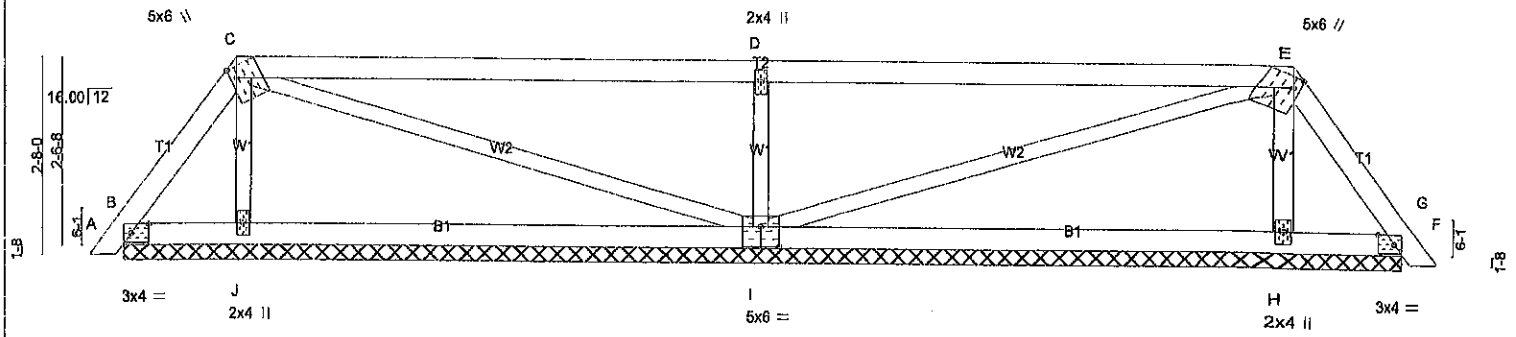

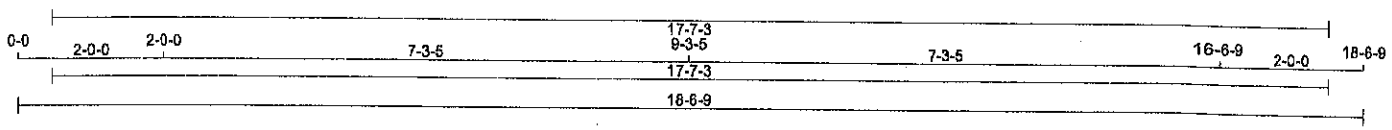

TOTAL WEIGHT = 2 X 61 = 122 lb
[M]

LUMBER
N. L. G. A. RULES

CHORDS	SIZE		LUMBER	DESCR.
A - C	2x4	DRY	No.2	SPF
C - E	2x4	DRY	No.2	SPF
E - G	2x4	DRY	No.2	SPF
B - I	2x4	DRY	No.2	SPF
I - F	2x4	DRY	No.2	SPF
ALL WEBS	2x3	DRY	No.2	SPF

DRY: SEASONED LUMBER.

PLATES (table is in inches)

JT	TYPE	PLATES	W	LEN	Y	X
B	TMB1-I	MT20	3.0	4.0	1.50	2.75
C	TTWW+m	MT20	5.0	6.0	1.75	1.00
D	TMW+w	MT20	2.0	4.0		
E	TTWW+m	MT20	5.0	6.0	1.75	1.00
F	TMB1-I	MT20	3.0	4.0	1.50	2.75
H	BMW1+w	MT20	2.0	4.0		
I	BSWWW1-I	MT20	5.0	6.0	3.25	3.00
J	BMW1+w	MT20	2.0	4.0		

NOTES- (1)
1) Lateral brace(s) shown shall be 1x4 for Part 9 design as per OBC 9.23.13.11, and no less than 2x4 for Part 4 design.

DIMENSIONS, SUPPORTS AND LOADINGS SPECIFIED BY FABRICATOR TO BE VERIFIED BY BUILDING DESIGNER

BEARINGS

JT	FACTORED GROSS REACTION VERT	HORZ	MAXIMUM FACTORED GROSS REACTION DOWN	HORZ	UPLIFT	INPUT BRG IN-SX	REQRD BRG IN-SX
B	119	0	119	0	-8	17-7-3 (8-9-10)8	
J	287	0	287	0	0	17-7-3 (8-9-10)8	
I	786	0	785	0	0	17-7-3 (8-9-10)8	
H	287	0	287	0	0	17-7-3 (8-9-10)8	
F	119	0	119	0	-8	17-7-3 (8-9-10)8	

VALUE IN PARENTHESIS INDICATES EFFECTIVE BEARING LENGTH

PROVIDE ANCHORAGE AT BEARING JOINT B FOR 150 LBS FACTORED UPLIFT
PROVIDE ANCHORAGE AT BEARING JOINT F FOR 150 LBS FACTORED UPLIFT

UNFACTORED REACTIONS

JT	1ST LCASE COMBINED	MAX./MIN. COMPONENT REACTIONS SNOW	LIVE	PERM.LIVE	WIND	DEAD	SOIL
B	79	84 / 0	0 / 0	0 / 0	0 / 0	0 / -5	0 / 0
J	208	105 / 0	0 / 0	0 / 0	0 / 0	103 / 0	0 / 0
I	550	389 / 0	0 / 0	0 / 0	0 / 0	161 / 0	0 / 0
H	208	105 / 0	0 / 0	0 / 0	0 / 0	103 / 0	0 / 0
F	79	84 / 0	0 / 0	0 / 0	0 / 0	0 / -5	0 / 0

BEARING MATERIAL TO BE SPF NO.2 OR BETTER AT JOINT(S) B, J, I, H, F

BRACING
TOP CHORD TO BE SHEATHED OR MAX. PURLIN SPACING = 8.25FT.
MAX. UNBRACED BOTTOM CHORD LENGTH = 10.00FT. OR RIGID CEILING DIRECTLY APPLIED.

LOADING
TOTAL LOAD CASES: (4)

CHORDS

MEMB. FR-TO	MAX. FACTORED FORCE (LBS)	FACTORED VERT. LOAD LC1 (PLF) FROM	TO	MAX CSI (LC)	MAX UNBRAC LENGTH
A- B	0 / 9	-70.5	-70.5	0.01 (1)	10.00
B- C	-76 / 0	-70.5	-70.5	0.03 (1)	6.25
C- D	-13 / 0	-70.5	-70.5	0.63 (1)	6.25
D- E	-13 / 0	-70.5	-70.5	0.63 (1)	6.25
E- F	-76 / 0	-70.5	-70.5	0.03 (1)	6.25
F- G	0 / 9	-70.5	-70.5	0.01 (1)	10.00
B- J	0 / 43	-17.5	-17.5	0.14 (4)	10.00
J- I	0 / 35	-17.5	-17.5	0.20 (4)	10.00
I- H	0 / 35	-17.5	-17.5	0.20 (4)	10.00
H- F	0 / 43	-17.5	-17.5	0.14 (4)	10.00

WEBS

MEMB. FR-TO	MAX. FACTORED FORCE (LBS)	MAX CSI (LC)
J- C	-177 / 0	0.03 (1)
C- I	-22 / 0	0.03 (1)
I- D	-640 / 0	0.10 (1)
I- E	-22 / 0	0.03 (1)
H- E	-177 / 0	0.03 (1)

DESIGN CRITERIA

SPECIFIED LOADS:

TOP CH.	LL	=	21.0	PSF
	DL	=	3.0	PSF
BOT CH.	LL	=	0.0	PSF
	DL	=	7.0	PSF
TOTAL LOAD		=	31.0	PSF

SPACING = 24.0 IN. C/C

LOADING IN FLAT SECTION BASED ON A SLOPE OF 2.00/12 MINIMUM

THIS TRUSS IS DESIGNED FOR RESIDENTIAL OR SMALL BUILDING REQUIREMENTS OF PART 9, NBCC 2010

THIS DESIGN COMPLIES WITH:
- PART 9 OF OBC 2012 , BCBC 2012 , ABC 2014
- CSA 086-09
- TPIC 2011

(55 % OF 23.0 P.S.F. G.S.L. PLUS
8.4 P.S.F. RAIN LOAD EQUALS
21.0 P.S.F. SPECIFIED ROOF LIVE LOAD

CSI: TC=0.63 (D-E:1) , BC=0.20 (I-J:4) , WB=0.10 (D-I:1) , SSI=0.25 (C-D:1)

DOL LUMBER=1.00 NAIL=1.00 LS BEND=1.10 COMP=1.10 SHEAR=1.10 TENS= 1.10

COMPANION LIVE LOAD FACTOR = 0.50

TRUSS PLATE MANUFACTURER IS NOT RESPONSIBLE FOR QUALITY CONTROL IN THE TRUSS MANUFACTURING PLANT .

NAIL VALUES

PLATE	GRIP(DRY) (PSI) MAX	MIN	SHEAR (PLI) MAX	MIN	SECTION (PLI) MAX	MIN
MT20	618	354	1867	822	2284	1656

PLATE PLACEMENT TOL. = 0.250 Inches

PLATE ROTATION TOL. = 5.0 Deg.

JSI GRIP= 0.88 (I) (INPUT = 0.90)
JSI METAL= 0.24 (I) (INPUT = 1.00)

LICENSED PROFESSIONAL ENGINEER
07-16-2015
R. TURENNE
100157040
PROVINCE OF ONTARIO

A-1073781

JOB NAME	TRUSS NAME	QUANTITY	PLY	JOB DESC.	DRWG NO.
253622	H06	9	1	TRUSS DESC.	

Alpa Roof Truss, Maple

Version 7.620 S Apr 15 2015 MiTek Industries, Inc. Thu Jul 16 14:32:00 2015 Page 1
ID:AyrJx9Y?fa2EXF7DRQxSq4zMEz1-sPwaWhwxHoDAunmkc6rvmhNQhHXFGMbLUoV97MyxTrl
Scale = 1:69.5

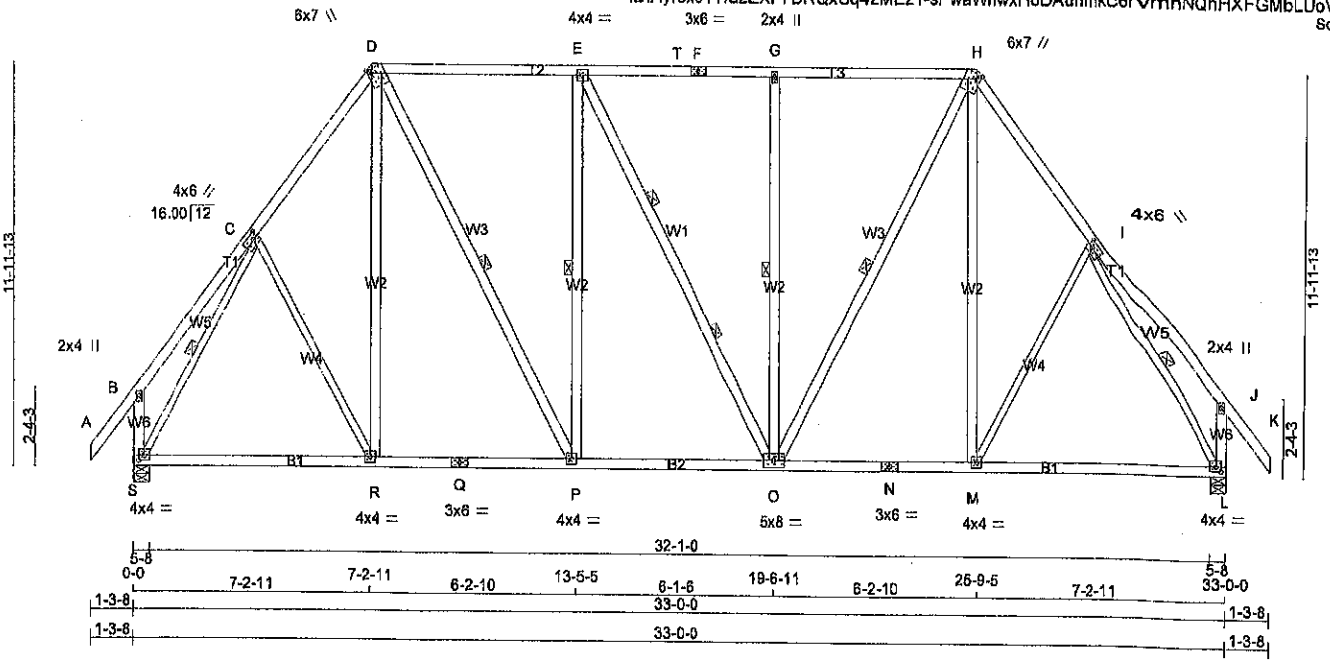

TOTAL WEIGHT = 9 X 216 = 1946 lb
[M][F]

LUMBER
N. L. G. A. RULES

CHORDS	SIZE		LUMBER	DESCR.
A - D	2x4	DRY	No.2	SPF
D - F	2x4	DRY	No.2	SPF
F - H	2x4	DRY	No.2	SPF
H - K	2x4	DRY	No.2	SPF
S - B	2x4	DRY	No.2	SPF
L - J	2x4	DRY	No.2	SPF
S - Q	2x4	DRY	No.2	SPF
Q - N	2x4	DRY	No.2	SPF
N - L	2x4	DRY	No.2	SPF
ALL WEBS EXCEPT	2x4	DRY	No.2	SPF
C - R	2x3	DRY	No.2	SPF
M - I	2x3	DRY	No.2	SPF
S - C	2x3	DRY	No.2	SPF
I - L	2x3	DRY	No.2	SPF

DRY: SEASONED LUMBER.

PLATES (table is in inches)

JT	TYPE	PLATES	W	LEN	Y	X
B	TMV+p	MT20	2.0	4.0		
C	TMWW-t	MT20	4.0	6.0	2.00	2.00
D	TTWW+m	MT20	6.0	7.0	Edge	1.50
E	TMWW-t	MT20	4.0	4.0		
F	TS-t	MT20	3.0	6.0		
G	TMW+w	MT20	2.0	4.0		
H	TTWW+m	MT20	6.0	7.0	Edge	1.50
I	TMWW-t	MT20	4.0	6.0	2.00	2.00
J	TMV+p	MT20	2.0	4.0		
L	BMVW1-t	MT20	4.0	4.0	1.75	1.75
M, P, R						
M	BMWW-t	MT20	4.0	4.0		
N	BS-t	MT20	3.0	6.0		
O	BMWWW-t	MT20	6.0	8.0		
Q	BS-t	MT20	3.0	6.0		
S	BMVW1-t	MT20	4.0	4.0	1.75	1.75

Edge - INDICATES REFERENCE CORNER OF PLATE TOUCHES EDGE OF CHORD.

LICENSED PROFESSIONAL ENGINEER
07-16-2015
R. TURENNE
100157040
PROVINCE OF ONTARIO

DIMENSIONS, SUPPORTS AND LOADINGS SPECIFIED BY FABRICATOR TO BE VERIFIED BY BUILDING DESIGNER

BEARINGS

JT	FACTORED GROSS REACTION VERT	HORZ	MAXIMUM FACTORED GROSS REACTION DOWN	HORZ	UPLIFT	INPUT BRG IN-SX	REQRD BRG IN-SX
S	1620	0	1620	0	0	5-8	1-12
L	1620	0	1620	0	0	5-8	1-12

UNFACTORED REACTIONS

JT	1ST LCASE COMBINED	MAX./MIN. COMPONENT REACTIONS SNOW	LIVE	PERM.LIVE	WIND	DEAD	SOIL
S	1146	752 / 0	0 / 0	0 / 0	0 / 0	394 / 0	0 / 0
L	1146	752 / 0	0 / 0	0 / 0	0 / 0	394 / 0	0 / 0

BEARING MATERIAL TO BE SPF NO.2 OR BETTER AT JOINT(S) S, L

BRACING
TOP CHORD TO BE SHEATHED OR MAX. PURLIN SPACING = 5.57FT.
MAX. UNBRACED BOTTOM CHORD LENGTH = 10.00FT. OR RIGID CEILING DIRECTLY APPLIED.

1 LATERAL BRACE(S) REQUIRED AT 1/ 2 LENGTH OF D-P, E-P, G-O, H-O, C-S, I-L.
2 LATERAL BRACE(S) REQUIRED AT 1/ 3 LENGTH OF E-O.
END VERTICAL(S) MUST BE SHEATHED OR HAVE BRACES AS INDICATED IN THE MAX. UNBRACED LENGTH COLUMN OF THE TABLE BELOW

LOADING
TOTAL LOAD CASES: (4)

CHORDS

MEMB. FR-TO	MAX. FACTORED FORCE (LBS)	FACTORED VERT. LOAD LC1 (PLF) FROM	TO	MAX CSI (LC)	MAX UNBRAC LENGTH
A- B	0 / 40	-70.5	-70.5	0.10 (1)	10.00
B- C	0 / 23	-70.5	-70.5	0.14 (1)	10.00
C- D	-1286 / 0	-70.5	-70.5	0.14 (1)	5.57
D- E	-1085 / 0	-78.0	-78.0	0.36 (1)	5.62
E- T	-1085 / 0	-78.0	-78.0	0.33 (1)	5.66
T- F	-1085 / 0	-78.0	-78.0	0.33 (1)	5.66
F- G	-1085 / 0	-78.0	-78.0	0.33 (1)	5.66
G- H	-1084 / 0	-78.0	-78.0	0.36 (1)	5.62
H- I	-1286 / 0	-70.5	-70.5	0.14 (1)	5.57
I- J	0 / 23	-70.5	-70.5	0.14 (1)	10.00
J- K	0 / 40	-70.5	-70.5	0.10 (1)	10.00
S- B	-196 / 0	0.0	0.0	0.02 (1)	7.81
L- J	-196 / 0	0.0	0.0	0.02 (1)	7.81
S- R	0 / 727	-17.5	-17.5	0.27 (4)	10.00
R- Q	0 / 755	-17.5	-17.5	0.28 (4)	10.00
Q- P	0 / 755	-17.5	-17.5	0.28 (4)	10.00
P- O	0 / 1085	-17.5	-17.5	0.24 (1)	10.00
O- N	0 / 755	-17.5	-17.5	0.28 (4)	10.00
N- M	0 / 755	-17.5	-17.5	0.28 (4)	10.00
M- L	0 / 727	-17.5	-17.5	0.27 (4)	10.00

WEBS

MEMB. FR-TO	MAX. FACTORED FORCE (LBS)	MAX CSI (LC)
C- R	0 / 64	0.02 (4)
R- D	0 / 97	0.02 (4)
D- P	0 / 702	0.11 (1)
P- E	-519 / 0	0.41 (1)
E- O	-2 / 0	0.00 (1)
O- G	-518 / 0	0.41 (1)
O- H	0 / 700	0.11 (1)
M- H	0 / 98	0.02 (4)
M- I	0 / 64	0.02 (4)
S- C	-1552 / 0	0.60 (1)
I- L	-1553 / 0	0.60 (1)

DESIGN CRITERIA

SPECIFIED LOADS:

TOP CH.	LL	=	21.0	PSF
	DL	=	3.0	PSF
BOT CH.	LL	=	0.0	PSF
	DL	=	7.0	PSF
TOTAL LOAD		=	31.0	PSF

SPACING = 24.0 IN. C/C

LOADING IN FLAT SECTION BASED ON PIGGYBACK TRUSS WITH SLOPES OF 6.00/12 AND -6.00/12 AND RESPECTIVE WALL HEIGHTS OF 0-0 AND 0-0 AND AN ADDITIONAL DEAD LOAD OF 3.0 P.S.F.

THIS TRUSS IS DESIGNED FOR RESIDENTIAL OR SMALL BUILDING REQUIREMENTS OF PART 9, NBCC 2010

THIS DESIGN COMPLIES WITH:
- PART 9 OF OBC 2012 , BCBC 2012 , ABC 2014
- CSA 086-09
- TPIC 2011

(55 % OF 23.0 P.S.F. G.S.L. PLUS
8.4 P.S.F. RAIN LOAD EQUALS
21.0 P.S.F. SPECIFIED ROOF LIVE LOAD

ALLOWABLE DEFL.(LL)= L/360 (1.10")
CALCULATED VERT. DEFL.(LL) = L/ 999 (0.05")
ALLOWABLE DEFL.(TL)= L/360 (1.10")
CALCULATED VERT. DEFL.(TL) = L/ 999 (0.10")

CSI: TC=0.36 (D-E:1) , BC=0.28 (M-O:4) , WB=0.60 (I-L:1) , SSI=0.23 (D-E:1)

DOL LUMBER=1.00 NAIL=1.00 LS BEND=1.10 COMP=1.10 SHEAR=1.10 TENS= 1.10

COMPANION LIVE LOAD FACTOR = 0.60

TRUSS PLATE MANUFACTURER IS NOT RESPONSIBLE FOR QUALITY CONTROL IN THE TRUSS MANUFACTURING PLANT .

NAIL VALUES

PLATE	GRIP(DRY) (PSI) MAX	MIN	SHEAR (PLI) MAX	MIN	SECTION (PLI) MAX	MIN
MT20	818	354	1667	822	2284	1656

PLATE PLACEMENT TOL. = 0.250 Inches

PLATE ROTATION TOL. = 5.0 Deg.

JSI GRIP= 0.89 (I) (INPUT = 0.90)
JSI METAL= 0.38 (I) (INPUT = 1.00)

A-15073780

JOB NAME	TRUSS NAME	QUANTITY	PLY	JOB DESC.	DRWG NO.
253622	H05	2	1	TRUSS DESC.	

Alpa Roof Truss, Maple

Version 7.620 S Apr 15 2015 MiTek Industries, Inc. Thu Jul 16 14:31:59 2015 Page 1
ID:AyrJx9Y?fa2EXF7DRQxSq4zMEz1-NDMCJLvJWU5JHdBY2OKgDUrCOtBAXxVBF8mbawyxTrL
Scale = 1:66.1

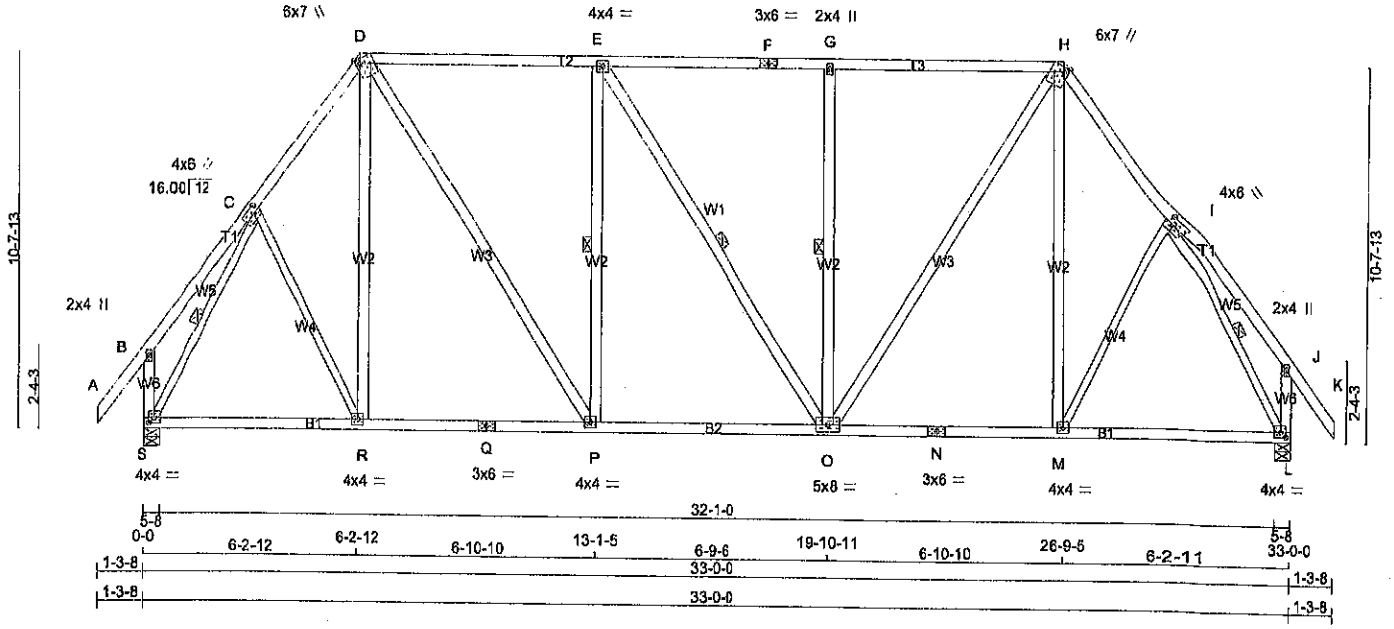

TOTAL WEIGHT = 2 X 203 = 406 lb
[M]

LUMBER
N. L. G. A. RULES

CHORDS	SIZE		LUMBER	DESCR.
A - D	2x4	DRY	No.2	SPF
D - F	2x4	DRY	No.2	SPF
F - H	2x4	DRY	No.2	SPF
H - K	2x4	DRY	No.2	SPF
S - B	2x4	DRY	No.2	SPF
L - J	2x4	DRY	No.2	SPF
S - Q	2x4	DRY	No.2	SPF
Q - N	2x4	DRY	No.2	SPF
N - L	2x4	DRY	No.2	SPF
ALL WEBS EXCEPT	2x4	DRY	No.2	SPF
C - R	2x3	DRY	No.2	SPF
M - I	2x3	DRY	No.2	SPF
S - C	2x3	DRY	No.2	SPF
I - L	2x3	DRY	No.2	SPF

DRY: SEASONED LUMBER.

PLATES (table is in inches)

JT	TYPE	PLATES	W	LEN	Y	X
B	TMV+p	MT20	2.0	4.0		
C	TMWW-t	MT20	4.0	6.0	2.00	2.00
D	TTWW+m	MT20	6.0	7.0	Edge	1.50
E	TMWW-t	MT20	4.0	4.0		
F	TS-t	MT20	3.0	6.0		
G	TMW+w	MT20	2.0	4.0		
H	TTWW+m	MT20	6.0	7.0	Edge	1.50
I	TMWW-t	MT20	4.0	6.0	2.00	2.00
J	TMV+p	MT20	2.0	4.0		
L	BMVW1-t	MT20	4.0	4.0	1.75	1.75
M, P, R						
M	BMWW-t	MT20	4.0	4.0		
N	BS-t	MT20	3.0	6.0		
O	BMWWW-t	MT20	5.0	8.0		
Q	BS-t	MT20	3.0	6.0		
S	BMVW1-t	MT20	4.0	4.0	1.75	1.75

Edge - INDICATES REFERENCE CORNER OF PLATE TOUCHES EDGE OF CHORD.

LICENSED PROFESSIONAL ENGINEER
07.16.2015
R. TURENNE
100157040
PROVINCE OF ONTARIO

DIMENSIONS, SUPPORTS AND LOADINGS SPECIFIED BY FABRICATOR TO BE VERIFIED BY BUILDING DESIGNER

BEARINGS

JT	FACTORED GROSS REACTION VERT	HORZ	MAXIMUM FACTORED GROSS REACTION DOWN	HORZ	UPLIFT	INPUT BRG IN-SX	REQRD BRG IN-SX
S	1550	0	1550	0	0	5-8	1-11
L	1550	0	1550	0	0	5-8	1-11

UNFACTORED REACTIONS

JT	1ST LCASE COMBINED	MAX./MIN. COMPONENT REACTIONS SNOW	LIVE	PERM.LIVE	WIND	DEAD	SOIL
S	1090	762 / 0	0 / 0	0 / 0	0 / 0	338 / 0	0 / 0
L	1090	762 / 0	0 / 0	0 / 0	0 / 0	338 / 0	0 / 0

BEARING MATERIAL TO BE SPF NO.2 OR BETTER AT JOINT(S) S, L

BRACING
TOP CHORD TO BE SHEATHED OR MAX. PURLIN SPACING = 5.24FT.
MAX. UNBRACED BOTTOM CHORD LENGTH = 10.00FT. OR RIGID CEILING DIRECTLY APPLIED.

1 LATERAL BRACE(S) REQUIRED AT 1/2 LENGTH OF E-P, E-O, G-O, C-S, I-L.
END VERTICAL(S) MUST BE SHEATHED OR HAVE BRACES AS INDICATED IN THE MAX. UNBRACED LENGTH COLUMN OF THE TABLE BELOW

LOADING
TOTAL LOAD CASES: (4)

CHORDS

MEMB. FR-TO	MAX. FACTORED FORCE (LBS)	FACTORED VERT. LOAD LC1 (PLF) FROM	TO	MAX CSI (LC)	MAX UNBRAC LENGTH
A-B	0 / 40	-70.5	-70.5	0.10 (1)	10.00
B-C	0 / 19	-70.5	-70.5	0.10 (1)	10.00
C-D	-1224 / 0	-70.5	-70.5	0.13 (1)	5.67
D-E	-1144 / 0	-70.5	-70.5	0.52 (1)	5.24
E-F	-1144 / 0	-70.5	-70.5	0.52 (1)	5.24
F-G	-1144 / 0	-70.5	-70.5	0.52 (1)	5.24
G-H	-1144 / 0	-70.5	-70.5	0.52 (1)	5.24
H-I	-1224 / 0	-70.5	-70.5	0.13 (1)	5.67
I-J	0 / 19	-70.5	-70.5	0.10 (1)	10.00
J-K	0 / 40	-70.5	-70.5	0.10 (1)	10.00
S-B	-183 / 0	0.0	0.0	0.02 (1)	7.81
L-J	-183 / 0	0.0	0.0	0.02 (1)	7.81
S-R	0 / 669	-17.5	-17.5	0.23 (4)	10.00
R-Q	0 / 719	-17.5	-17.5	0.24 (4)	10.00
Q-P	0 / 719	-17.5	-17.5	0.24 (4)	10.00
P-O	0 / 1144	-17.5	-17.5	0.27 (1)	10.00
O-N	0 / 719	-17.5	-17.5	0.24 (4)	10.00
N-M	0 / 719	-17.5	-17.5	0.24 (4)	10.00
M-L	0 / 669	-17.5	-17.5	0.23 (4)	10.00

WEBS

MEMB. FR-TO	MAX. FACTORED FORCE (LBS)	MAX CSI (LC)
C-R	0 / 102	0.02 (1)
R-D	0 / 86	0.02 (4)
D-P	0 / 766	0.12 (1)
P-E	-520 / 0	0.30 (1)
E-O	-1 / 0	0.00 (1)
O-G	-520 / 0	0.30 (1)
O-H	0 / 765	0.12 (1)
M-H	0 / 88	0.02 (4)
M-I	0 / 102	0.02 (1)
S-C	-1483 / 0	0.46 (1)
I-L	-1483 / 0	0.46 (1)

DESIGN CRITERIA

SPECIFIED LOADS:

TOP CH.	LL	=	21.0	PSF
	DL	=	3.0	PSF
BOT CH.	LL	=	0.0	PSF
	DL	=	7.0	PSF
TOTAL LOAD		=	31.0	PSF

SPACING = 24.0 IN. C/C

LOADING IN FLAT SECTION BASED ON A SLOPE OF 2.00/12 MINIMUM

THIS TRUSS IS DESIGNED FOR RESIDENTIAL OR SMALL BUILDING REQUIREMENTS OF PART 9, NBCC 2010

THIS DESIGN COMPLIES WITH:
- PART 9 OF OBC 2012 , BCBC 2012 , ABC 2014
- CSA 086-09
- TPIC 2011

(55 % OF 23.0 P.S.F. G.S.L. PLUS
8.4 P.S.F. RAIN LOAD EQUALS
21.0 P.S.F. SPECIFIED ROOF LIVE LOAD

ALLOWABLE DEFL.(LL)= L/360 (1.10")
CALCULATED VERT. DEFL.(LL) = L/ 999 (0.05")
ALLOWABLE DEFL.(TL)= L/360 (1.10")
CALCULATED VERT. DEFL.(TL) = L/ 999 (0.11")

CSI: TC=0.52 (D-E:1) , BC=0.27 (O-P:1) , WB=0.46 (I-L:1) , SSI=0.23 (D-E:1)

DOL LUMBER=1.00 NAIL=1.00 LS BEND=1.10 COMP=1.10 SHEAR=1.10 TENS= 1.10

COMPANION LIVE LOAD FACTOR = 0.50

TRUSS PLATE MANUFACTURER IS NOT RESPONSIBLE FOR QUALITY CONTROL IN THE TRUSS MANUFACTURING PLANT .

NAIL VALUES

PLATE	GRIP(DRY) (PSI) MAX	MIN	SHEAR (PLI) MAX	MIN	SECTION (PLI) MAX	MIN
MT20	618	354	1667	822	2284	1656

PLATE PLACEMENT TOL. = 0.250 inches

PLATE ROTATION TOL. = 5.0 Deg.

JSI GRIP= 0.89 (I) (INPUT = 0.90)
JSI METAL= 0.35 (I) (INPUT = 1.00)

A-H073779

JOB NAME	TRUSS NAME	QUANTITY	PLY	JOB DESC.	DRWG NO.
253622	H04	2	1	TRUSS DESC.	

Alpa Roof Truss, Maple

Version 7.620 S Apr 15 2015 MiTek Industries, Inc. Thu Jul 16 14:31:58 2015 Page 1
ID:AyrJx9Y?fa2EXF7DRQxSq4zMEz1-v0cq5?uglAzSfTdMUhpRgGI?NTr9oWP21U022TyxTr\
Scale = 1:80.3

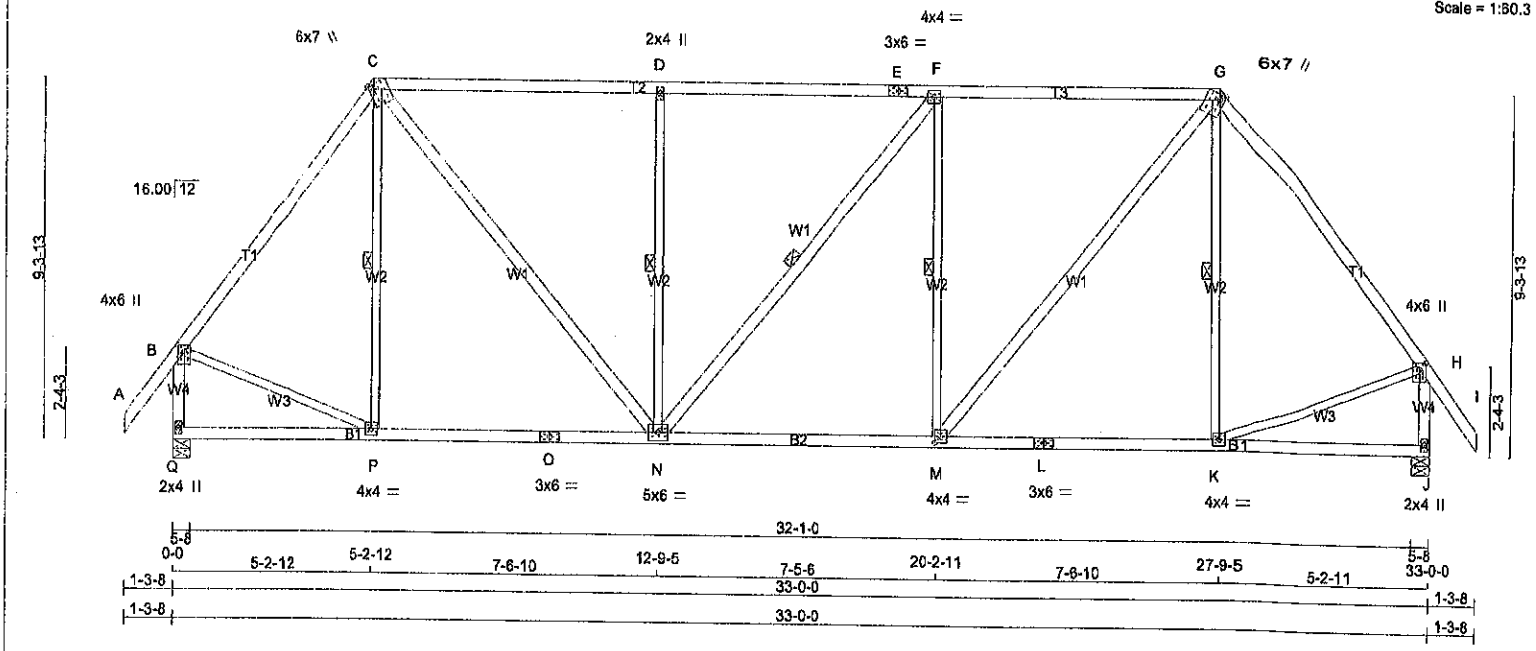

TOTAL WEIGHT = 2 X 169 = 339 lb
[M]

LUMBER
N. L. G. A. RULES

CHORDS	SIZE		LUMBER	DESCR.
A - C	2x4	DRY	No.2	SPF
C - E	2x4	DRY	No.2	SPF
E - G	2x4	DRY	No.2	SPF
G - I	2x4	DRY	No.2	SPF
Q - B	2x4	DRY	No.2	SPF
J - H	2x4	DRY	No.2	SPF
Q - O	2x4	DRY	No.2	SPF
O - L	2x4	DRY	No.2	SPF
L - J	2x4	DRY	No.2	SPF
ALL WEBS	2x3	DRY	No.2	SPF
EXCEPT				
C - N	2x4	DRY	No.2	SPF
N - F	2x4	DRY	No.2	SPF
M - G	2x4	DRY	No.2	SPF

DRY: SEASONED LUMBER.

PLATES (table is in inches)

JT	TYPE	PLATES	W	LEN	Y	X
B	TMVW+p	MT20	4.0	6.0	2.00	2.00
C	TTWW+m	MT20	6.0	7.0	Edge	1.50
D	TMW+w	MT20	2.0	4.0		
E	TS-t	MT20	3.0	6.0		
F	TMWW-t	MT20	4.0	4.0		
G	TTWW+m	MT20	6.0	7.0	Edge	1.50
H	TMVW+p	MT20	4.0	6.0	2.00	2.00
J	BMV1+p	MT20	2.0	4.0		
K	BMWW-t	MT20	4.0	4.0		
L	BS-t	MT20	3.0	6.0		
M	BMWW-t	MT20	4.0	4.0	2.00	1.75
N	BMWWW-t	MT20	5.0	6.0		
O	BS-t	MT20	3.0	6.0		
P	BMWW-t	MT20	4.0	4.0		
Q	BMV1+p	MT20	2.0	4.0		

Edge - INDICATES REFERENCE CORNER OF PLATE TOUCHES EDGE OF CHORD.

LICENSED PROFESSIONAL ENGINEER
07.16.2015
R. TURENNE
100157040
PROVINCE OF ONTARIO

DIMENSIONS, SUPPORTS AND LOADINGS SPECIFIED BY FABRICATOR TO BE VERIFIED BY BUILDING DESIGNER

BEARINGS

JT	FACTORED GROSS REACTION VERT	HORZ	MAXIMUM FACTORED GROSS REACTION DOWN	HORZ	UPLIFT	INPUT BRG IN-SX	REQRD BRG IN-SX
Q	1550	0	1550	0	0	5-8	1-11
J	1550	0	1550	0	0	5-8	1-11

UNFACTORED REACTIONS

JT	1ST LCASE COMBINED	MAX./MIN. COMPONENT REACTIONS SNOW	LIVE	PERM.LIVE	WIND	DEAD	SOIL
Q	1090	762 / 0	0 / 0	0 / 0	0 / 0	338 / 0	0 / 0
J	1090	762 / 0	0 / 0	0 / 0	0 / 0	338 / 0	0 / 0

BEARING MATERIAL TO BE SPF NO.2 OR BETTER AT JOINT(S) Q, J

BRACING
TOP CHORD TO BE SHEATHED OR MAX. PURLIN SPACING = 4.75FT.
MAX. UNBRACED BOTTOM CHORD LENGTH = 10.00FT. OR RIGID CEILING DIRECTLY APPLIED.

1 LATERAL BRACE(S) REQUIRED AT 1/2 LENGTH OF C-P, D-N, F-N, F-M, G-K.
END VERTICAL(S) MUST BE SHEATHED OR HAVE BRACES AS INDICATED IN THE MAX. UNBRACED LENGTH COLUMN OF THE TABLE BELOW

LOADING
TOTAL LOAD CASES: (4)

CHORDS

MEMB. FR-TO	MAX. FACTORED FORCE (LBS)	FACTORED VERT. LOAD LC1 (PLF) FROM	TO	MAX CSI (LC)	MAX UNBRAC LENGTH
A- B	0 / 40	-70.5	-70.5	0.10 (1)	10.00
B- C	-1208 / 0	-70.5	-70.5	0.45 (1)	5.35
C- D	-1310 / 0	-70.5	-70.5	0.66 (1)	4.76
D- E	-1310 / 0	-70.5	-70.5	0.67 (1)	4.76
E- F	-1310 / 0	-70.5	-70.5	0.67 (1)	4.76
F- G	-1311 / 0	-70.5	-70.5	0.67 (1)	4.75
G- H	-1208 / 0	-70.5	-70.5	0.45 (1)	5.35
H- I	0 / 40	-70.5	-70.5	0.10 (1)	10.00
Q- B	-1517 / 0	0.0	0.0	0.19 (1)	6.67
J- H	-1517 / 0	0.0	0.0	0.19 (1)	6.67
Q- P	0 / 0	-17.5	-17.5	0.17 (4)	10.00
P- O	0 / 720	-17.5	-17.5	0.25 (4)	10.00
O- N	0 / 720	-17.5	-17.5	0.25 (4)	10.00
N- M	0 / 1311	-17.5	-17.5	0.32 (1)	10.00
M- L	0 / 720	-17.5	-17.5	0.25 (4)	10.00
L- K	0 / 720	-17.5	-17.5	0.25 (4)	10.00
K- J	0 / 0	-17.5	-17.5	0.17 (4)	10.00

WEBS

MEMB. FR-TO	MAX. FACTORED FORCE (LBS)	MAX CSI (LC)
P- C	-140 / 52	0.08 (1)
C- N	0 / 917	0.15 (1)
N- D	-571 / 0	0.33 (1)
N- F	-1 / 0	0.00 (1)
M- F	-571 / 0	0.33 (1)
M- G	0 / 919	0.15 (1)
K- G	-141 / 52	0.08 (1)
B- P	0 / 769	0.17 (1)
K- H	0 / 769	0.17 (1)

DESIGN CRITERIA

SPECIFIED LOADS:

TOP CH.	LL	=	21.0	PSF
	DL	=	3.0	PSF
BOT CH.	LL	=	0.0	PSF
	DL	=	7.0	PSF
TOTAL LOAD		=	31.0	PSF

SPACING = 24.0 IN. C/C

LOADING IN FLAT SECTION BASED ON A SLOPE OF 2.00/12 MINIMUM

THIS TRUSS IS DESIGNED FOR RESIDENTIAL OR SMALL BUILDING REQUIREMENTS OF PART 9, NBCC 2010

THIS DESIGN COMPLIES WITH:
- PART 9 OF OBC 2012 , BCBC 2012 , ABC 2014
- CSA 086-09
- TPIC 2011

(55 % OF 23.0 P.S.F. G.S.L. PLUS
8.4 P.S.F. RAIN LOAD EQUALS
21.0 P.S.F. SPECIFIED ROOF LIVE LOAD

ALLOWABLE DEFL.(LL)= L/360 (1.10")
CALCULATED VERT. DEFL.(LL) = L/ 999 (0.05")
ALLOWABLE DEFL.(TL)= L/360 (1.10")
CALCULATED VERT. DEFL.(TL) = L/ 999 (0.12")

CSI: TC=0.67 (F-G:1) , BC=0.32 (M-N:1) ,
WB=0.33 (F-M:1) , SSI=0.25 (F-G:1)

DOL LUMBER=1.00 NAIL=1.00 LS BEND=1.10
COMP=1.10 SHEAR=1.10 TENS= 1.10

COMPANION LIVE LOAD FACTOR = 0.50

TRUSS PLATE MANUFACTURER IS NOT RESPONSIBLE FOR QUALITY CONTROL IN THE TRUSS MANUFACTURING PLANT .

NAIL VALUES

PLATE	GRIP(DRY) (PSI) MAX	MIN	SHEAR (PLI) MAX	MIN	SECTION (PLI) MAX	MIN
MT20	618	364	1667	822	2284	1656

PLATE PLACEMENT TOL. = 0.250 Inches

PLATE ROTATION TOL. = 5.0 Deg.

JSI GRIP= 0.89 (P) (INPUT = 0.90)
JSI METAL= 0.29 (B) (INPUT = 1.00)

A-15073778

JOB NAME	TRUSS NAME	QUANTITY	PLY	JOB DESC.	DRWG NO.
253622	H03	2	1	TRUSS DESC.	

Alpa Roof Truss, Maple

Version 7.620 S Apr 16 2015 MiTek Industries, Inc. Thu Jul 16 14:31:58 2015 Page 1
ID:AyrJx9Y?fa2EXF7DRQxSq4zMEz1-v0oq5?ugiAzSfTdMUhpRgGlyHTqGoQh21U022TyxTr\
Scale = 1:60.3

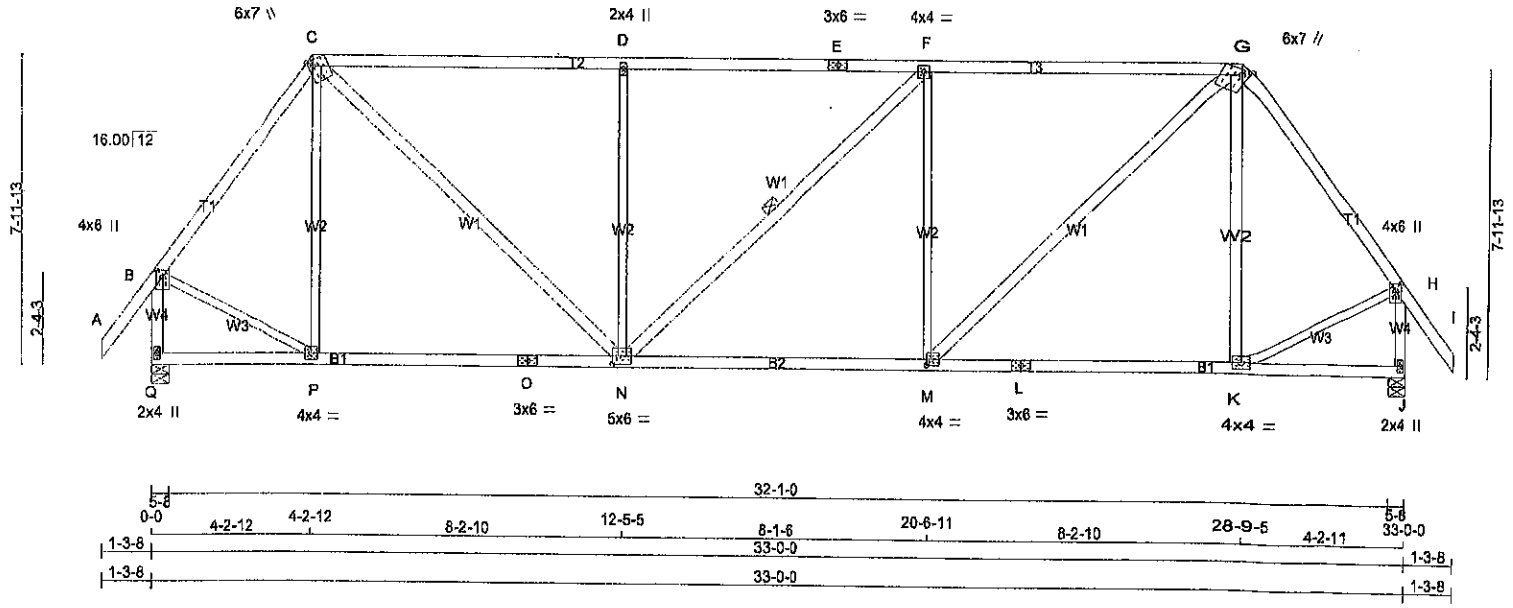

TOTAL WEIGHT = 2 X 160 = 321 lb
[M]

LUMBER
N. L. G. A. RULES

CHORDS	SIZE		LUMBER	DESCR.
A - C	2x4	DRY	No.2	SPF
C - E	2x4	DRY	No.2	SPF
E - G	2x4	DRY	No.2	SPF
G - I	2x4	DRY	No.2	SPF
Q - B	2x4	DRY	No.2	SPF
J - H	2x4	DRY	No.2	SPF
Q - O	2x4	DRY	No.2	SPF
O - L	2x4	DRY	No.2	SPF
L - J	2x4	DRY	No.2	SPF
ALL WEBS	2x3	DRY	No.2	SPF
EXCEPT				
C - N	2x4	DRY	No.2	SPF
N - F	2x4	DRY	No.2	SPF
M - G	2x4	DRY	No.2	SPF

DRY: SEASONED LUMBER.

PLATES (table is in inches)

JT	TYPE	PLATES	W	LEN	Y	X
B	TMVW+p	MT20	4.0	6.0	2.00	2.00
C	TTWW+m	MT20	6.0	7.0	Edge	1.50
D	TMW+w	MT20	2.0	4.0		
E	TS-t	MT20	3.0	6.0		
F	TMWW-t	MT20	4.0	4.0		
G	TTWW+m	MT20	6.0	7.0	Edge	1.50
H	TMVW+p	MT20	4.0	6.0	2.00	2.00
J	BMV1+p	MT20	2.0	4.0		
K	BMWW-t	MT20	4.0	4.0		
L	BS-t	MT20	3.0	6.0		
M	BMWW-t	MT20	4.0	4.0	2.00	1.50
N	BMWWW-t	MT20	5.0	6.0	2.50	2.00
O	BS-t	MT20	3.0	6.0		
P	BMWW-t	MT20	4.0	4.0		
Q	BMV1+p	MT20	2.0	4.0		

Edge - INDICATES REFERENCE CORNER OF PLATE TOUCHES EDGE OF CHORD.

LICENSED PROFESSIONAL ENGINEER
07-16-2015
R. TURENNE
100157040
PROVINCE OF ONTARIO

DIMENSIONS, SUPPORTS AND LOADINGS SPECIFIED BY FABRICATOR TO BE VERIFIED BY BUILDING DESIGNER

BEARINGS

JT	FACTORED GROSS REACTION VERT	HORZ	MAXIMUM FACTORED GROSS REACTION DOWN	HORZ	UPLIFT	INPUT BRG IN-SX	REQRD BRG IN-SX
Q	1550	0	1550	0	0	5-8	1-11
J	1550	0	1550	0	0	5-8	1-11

UNFACTORED REACTIONS

JT	1ST LCASE COMBINED	MAX./MIN. COMPONENT REACTIONS SNOW	LIVE	PERM.LIVE	WIND	DEAD	SOIL
Q	1090	752 / 0	0 / 0	0 / 0	0 / 0	338 / 0	0 / 0
J	1090	752 / 0	0 / 0	0 / 0	0 / 0	338 / 0	0 / 0

BEARING MATERIAL TO BE SPF NO.2 OR BETTER AT JOINT(S) Q, J

BRACING
TOP CHORD TO BE SHEATHED OR MAX. PURLIN SPACING = 4.17FT.
MAX. UNBRACED BOTTOM CHORD LENGTH = 10.00FT. OR RIGID CEILING DIRECTLY APPLIED.

1 LATERAL BRACE(S) REQUIRED AT 1/2 LENGTH OF F-N,
END VERTICAL(S) MUST BE SHEATHED OR HAVE BRACES AS INDICATED IN THE MAX. UNBRACED LENGTH COLUMN OF THE TABLE BELOW

LOADING
TOTAL LOAD CASES: (4)

CHORDS

MEMB. FR-TO	MAX. FACTORED FORCE (LBS)	FACTORED VERT. LOAD LC1 (PLF) FROM	TO	MAX CSI (LC)	MAX UNBRAC LENGTH
A- B	0 / 40	-70.5	-70.5	0.10 (1)	10.00
B- C	-1195 / 0	-70.5	-70.5	0.27 (1)	5.55
C- D	-1534 / 0	-70.5	-70.5	0.86 (1)	4.19
D- E	-1534 / 0	-70.5	-70.5	0.88 (1)	4.17
E- F	-1534 / 0	-70.5	-70.5	0.88 (1)	4.17
F- G	-1535 / 0	-70.5	-70.5	0.87 (1)	4.17
G- H	-1195 / 0	-70.5	-70.5	0.27 (1)	5.55
H- I	0 / 40	-70.5	-70.5	0.10 (1)	10.00
Q- B	-1630 / 0	0.0	0.0	0.20 (1)	6.65
J- H	-1630 / 0	0.0	0.0	0.20 (1)	6.65
Q- P	0 / 0	-17.5	-17.5	0.18 (4)	10.00
P- O	0 / 711	-17.5	-17.5	0.29 (4)	10.00
O- N	0 / 711	-17.5	-17.5	0.29 (4)	10.00
N- M	0 / 1535	-17.5	-17.5	0.38 (1)	10.00
M- L	0 / 710	-17.5	-17.5	0.29 (4)	10.00
L- K	0 / 710	-17.5	-17.5	0.29 (4)	10.00
K- J	0 / 0	-17.5	-17.5	0.18 (4)	10.00

WEBS

MEMB. FR-TO	MAX. FACTORED FORCE (LBS)	MAX CSI (LC)
P- C	-198 / 32	0.24 (1)
C- N	0 / 1125	0.18 (1)
N- D	-622 / 0	0.75 (1)
N- F	-1 / 0	0.00 (1)
M- F	-622 / 0	0.76 (1)
M- G	0 / 1126	0.18 (1)
K- G	-199 / 32	0.24 (1)
B- P	0 / 783	0.18 (1)
K- H	0 / 783	0.18 (1)

DESIGN CRITERIA

SPECIFIED LOADS:

TOP CH.	LL	=	21.0	PSF
	DL	=	3.0	PSF
BOT CH.	LL	=	0.0	PSF
	DL	=	7.0	PSF
TOTAL LOAD		=	31.0	PSF

SPACING = 24.0 IN. C/C

LOADING IN FLAT SECTION BASED ON A SLOPE OF 2.00/12 MINIMUM

THIS TRUSS IS DESIGNED FOR RESIDENTIAL OR SMALL BUILDING REQUIREMENTS OF PART 9, NBCC 2010

THIS DESIGN COMPLIES WITH:
- PART 9 OF OBC 2012 , BCBC 2012 , ABC 2014
- CSA 086-09
- TPIC 2011

(55 % OF 23.0 P.S.F. G.S.L. PLUS
8.4 P.S.F. RAIN LOAD EQUALS
21.0 P.S.F. SPECIFIED ROOF LIVE LOAD

ALLOWABLE DEFL.(LL)= L/360 (1.10")
CALCULATED VERT. DEFL.(LL) = L/ 999 (0.07")
ALLOWABLE DEFL.(TL)= L/360 (1.10")
CALCULATED VERT. DEFL.(TL) = L/ 999 (0.15")

CSI: TC=0.87 (F-G:1) , BC=0.38 (M-N:1) , WB=0.76 (F-M:1) , SSI=0.27 (F-G:1)

DOL LUMBER=1.00 NAIL=1.00 LS BEND=1.10 COMP=1.10 SHEAR=1.10 TENS= 1.10

COMPANION LIVE LOAD FACTOR = 0.50

TRUSS PLATE MANUFACTURER IS NOT RESPONSIBLE FOR QUALITY CONTROL IN THE TRUSS MANUFACTURING PLANT .

NAIL VALUES

PLATE	GRIP(DRY) (PSI) MAX	MIN	SHEAR (PLI) MAX	MIN	SECTION (PLI) MAX	MIN
MT20	618	354	1667	822	2284	1656

PLATE PLACEMENT TOL. = 0.250 Inches

PLATE ROTATION TOL. = 5.0 Deg.

JSI GRIP= 0.89 (B) (INPUT = 0.90)
JSI METAL= 0.31 (M) (INPUT = 1.00)

A-15073777

JOB NAME	TRUSS NAME	QUANTITY	PLY	JOB DESC.	DRWG NO.
253622	H02	2	1	TRUSS DESC.	

Alpa Roof Truss, Maple

Version 7.620 S Apr 15 2015 MiTek Industries, Inc. Thu Jul 16 14:31:57 2015 Page 1
ID:AyrJx9Y?fa2EXF7DRQxSq4zMEz1-RqERugt2_trb1K29xzICB3Inh4Tw31YuoqHVW1yxTrM
Scale = 1:60.3

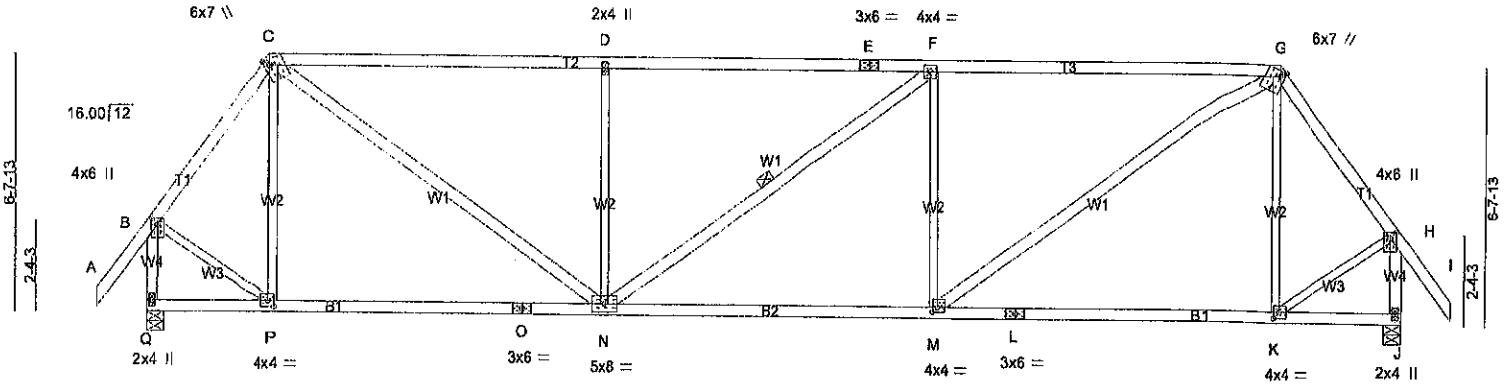

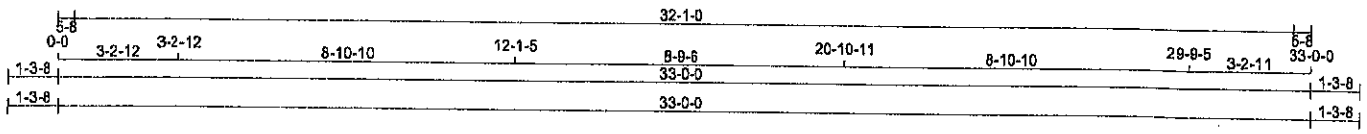

TOTAL WEIGHT = 2 X 152 = 304 lb [M]

LUMBER
N. L. G. A. RULES

CHORDS	SIZE		LUMBER	DESCR.
A - C	2x4	DRY	No.2	SPF
C - E	2x4	DRY	1650F 1.5E	SPF
E - G	2x4	DRY	1650F 1.5E	SPF
G - I	2x4	DRY	No.2	SPF
Q - B	2x4	DRY	No.2	SPF
J - H	2x4	DRY	No.2	SPF
Q - O	2x4	DRY	No.2	SPF
O - L	2x4	DRY	No.2	SPF
L - J	2x4	DRY	No.2	SPF
ALL WEBS EXCEPT	2x3	DRY	No.2	SPF
C - N	2x4	DRY	No.2	SPF
N - F	2x4	DRY	No.2	SPF
M - G	2x4	DRY	No.2	SPF

DRY: SEASONED LUMBER.

PLATES (table is in inches)

JT	TYPE	PLATES	W	LEN	Y	X
B	TMVW+p	MT20	4.0	6.0	1.75	2.00
C	TTWW+m	MT20	6.0	7.0	Edge	1.50
D	TMW+w	MT20	2.0	4.0		
E	TS-t	MT20	3.0	6.0		
F	TMWW-t	MT20	4.0	4.0		
G	TTWW+m	MT20	6.0	7.0	Edge	1.50
H	TMVW+p	MT20	4.0	6.0	1.75	2.00
J	BMV1+p	MT20	2.0	4.0		
K	BMWW-t	MT20	4.0	4.0	2.00	1.75
L	BS-t	MT20	3.0	6.0		
M	BMWW-t	MT20	4.0	4.0	1.50	1.50
N	BMWWW-t	MT20	5.0	8.0		
O	BS-t	MT20	3.0	6.0		
P	BMWW-t	MT20	4.0	4.0	2.00	1.75
Q	BMV1+p	MT20	2.0	4.0		

Edge - INDICATES REFERENCE CORNER OF PLATE TOUCHES EDGE OF CHORD.

LICENSED PROFESSIONAL ENGINEER
07-16-2015
R. TURENNE
100157040
PROVINCE OF ONTARIO

DIMENSIONS, SUPPORTS AND LOADINGS SPECIFIED BY FABRICATOR TO BE VERIFIED BY BUILDING DESIGNER

BEARINGS

JT	FACTORED GROSS REACTION VERT	HORZ	MAXIMUM FACTORED GROSS REACTION DOWN	HORZ	UPLIFT	INPUT BRG IN-SX	REQRD BRG IN-SX
Q	1550	0	1550	0	0	5-8	1-11
J	1550	0	1550	0	0	5-8	1-11

UNFACTORED REACTIONS

JT	1ST LCASE COMBINED	MAX./MIN. COMPONENT REACTIONS SNOW	LIVE	PERM.LIVE	WIND	DEAD	SOIL
Q	1090	752 / 0	0 / 0	0 / 0	0 / 0	338 / 0	0 / 0
J	1090	752 / 0	0 / 0	0 / 0	0 / 0	338 / 0	0 / 0

BEARING MATERIAL TO BE SPF NO.2 OR BETTER AT JOINT(S) Q, J

BRACING
TOP CHORD TO BE SHEATHED OR MAX. PURLIN SPACING = 4.43FT.
MAX. UNBRACED BOTTOM CHORD LENGTH = 10.00FT. OR RIGID CEILING DIRECTLY APPLIED.

1 LATERAL BRACE(S) REQUIRED AT 1/ 2 LENGTH OF F-N.
END VERTICAL(S) MUST BE SHEATHED OR HAVE BRACES AS INDICATED IN THE MAX. UNBRACED LENGTH COLUMN OF THE TABLE BELOW

LOADING
TOTAL LOAD CASES: (4)

CHORDS

MEMB. FR-TO	MAX. FACTORED FORCE (LBS)	FACTORED VERT. LOAD LC1 (PLF) FROM	TO	MAX CSI (LC)	MAX UNBRAC LENGTH
A- B	0 / 40	-70.5	-70.5	0.10 (1)	10.00
B- C	-1157 / 0	-70.5	-70.5	0.16 (1)	5.76
C- D	-1851 / 0	-70.5	-70.5	0.86 (1)	4.44
D- E	-1851 / 0	-70.5	-70.5	0.86 (1)	4.44
E- F	-1851 / 0	-70.5	-70.5	0.85 (1)	4.44
F- G	-1852 / 0	-70.5	-70.5	0.86 (1)	4.43
G- H	-1157 / 0	-70.5	-70.5	0.15 (1)	5.76
H- I	0 / 40	-70.5	-70.5	0.10 (1)	10.00
Q- B	-1548 / 0	0.0	0.0	0.20 (1)	6.61
J- H	-1548 / 0	0.0	0.0	0.20 (1)	6.62
Q- P	0 / 0	-17.5	-17.5	0.20 (4)	10.00
P- O	0 / 685	-17.5	-17.5	0.33 (4)	10.00
O- N	0 / 685	-17.5	-17.5	0.33 (4)	10.00
N- M	0 / 1852	-17.5	-17.5	0.46 (1)	10.00
M- L	0 / 685	-17.5	-17.5	0.33 (4)	10.00
L- K	0 / 685	-17.5	-17.5	0.33 (4)	10.00
K- J	0 / 0	-17.5	-17.5	0.20 (4)	10.00

WEBS

MEMB. FR-TO	MAX. FACTORED FORCE (LBS)	MAX CSI (LC)
P- C	-276 / 9	0.20 (1)
C- N	0 / 1431	0.23 (1)
N- D	-673 / 0	0.49 (1)
N- F	0 / 0	0.00 (1)
M- F	-673 / 0	0.49 (1)
M- G	0 / 1432	0.23 (1)
K- G	-276 / 9	0.20 (1)
B- P	0 / 800	0.18 (1)
K- H	0 / 800	0.18 (1)

DESIGN CRITERIA

SPECIFIED LOADS:

TOP CH.	LL	=	21.0	PSF
	DL	=	3.0	PSF
BOT CH.	LL	=	0.0	PSF
	DL	=	7.0	PSF
TOTAL LOAD		=	31.0	PSF

SPACING = 24.0 IN. C/C

LOADING IN FLAT SECTION BASED ON A SLOPE OF 2.00/12 MINIMUM

THIS TRUSS IS DESIGNED FOR RESIDENTIAL OR SMALL BUILDING REQUIREMENTS OF PART 9, NBCC 2010

THIS DESIGN COMPLIES WITH:
- PART 9 OF OBC 2012 , BCBC 2012 , ABC 2014
- CSA 086-09
- TPIC 2011

(55 % OF 23.0 P.S.F. G.S.L. PLUS
8.4 P.S.F. RAIN LOAD EQUALS
21.0 P.S.F. SPECIFIED ROOF LIVE LOAD

ALLOWABLE DEFL.(LL)= L/360 (1.10")
CALCULATED VERT. DEFL.(LL) = L/ 999 (0.09")
ALLOWABLE DEFL.(TL)= L/360 (1.10")
CALCULATED VERT. DEFL.(TL) = L/ 999 (0.20")

CSI: TC=0.86 (F-G:1) , BC=0.45 (M-N:1) , WB=0.49 (F-M:1) , SSI=0.28 (F-G:1)

DOL LUMBER=1.00 NAIL=1.00 LS BEND=1.10 COMP=1.10 SHEAR=1.10 TENS= 1.10

COMPANION LIVE LOAD FACTOR = 0.50

TRUSS PLATE MANUFACTURER IS NOT RESPONSIBLE FOR QUALITY CONTROL IN THE TRUSS MANUFACTURING PLANT .

NAIL VALUES

PLATE	GRIP(DRY) (PSI) MAX	MIN	SHEAR (PLI) MAX	MIN	SECTION (PLI) MAX	MIN
MT20	618	354	1667	822	2284	1656

PLATE PLACEMENT TOL. = 0.250 Inches

PLATE ROTATION TOL. = 5.0 Deg.

JSI GRIP= 0.81 (Q) (INPUT = 0.90)
JSI METAL= 0.44 (M) (INPUT = 1.00)

A-15073776

LUS – Double Shear Joist Hangers

SIMPSON Strong-Tie®

All LUS hangers have double shear nailing. This patented innovation distributes the load through two points on each joist nail for greater strength. It also allows the use of fewer nails, faster installation and the use of common nails for all connections.

MATERIAL: 18 gauge

FINISH: G90 galvanized

DESIGN:

- Factored resistances are in accordance with CSA O86-14
- Uplift resistances have been increased 15%. No further increase is permitted.
- Wood shear is not considered in the factored resistances given. The specifier must ensure that the joist and header capacities are capable of withstanding these loads.

INSTALLATION:

- Use all specified fasteners
- Nails: 16d = 0.162" dia. x 3½" long common wire, 10d = 0.148" x 3" long common wire.
- Double shear nails must be driven at an angle through the joist or truss into the header to achieve the table loads
- Not designed for welded or nailer applications

OPTIONS:

- These hangers cannot be modified.

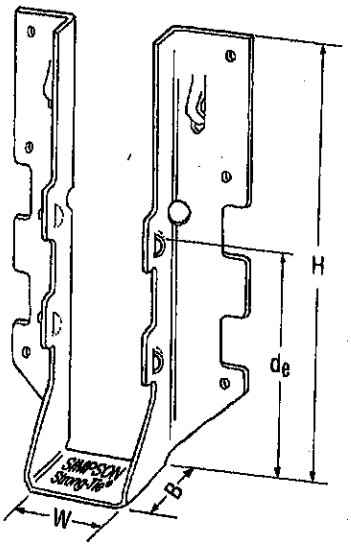

LUS28

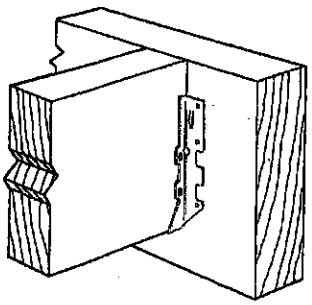

Typical LUS Installation

Model No.	Ga	Dimensions (in)				Fasteners		Factored Resistance (lbs)			
								D.Fir-L		S-P-F	
		W	H	B	d_e[1]	Face	Joist	Uplift (K_D=1.15)	Normal (K_D=1.00)	Uplift (K_D=1.15)	Normal (K_D=1.00)
LUS24	18	1 9/16	3 1/8	1 3/4	1 15/16	4-10d	2-10d	710	1630	645	1155
LUS24-2	18	3 1/8	3 1/8	2	1 13/16	4-16d	2-16d	835	2020	590	1435
LUS26	18	1 9/16	4 3/4	1 3/4	3 5/8	4-10d	4-10d	1420	2170	1290	1630
LUS26-2	18	3 1/8	4 7/8	2	4	4-16d	4-16d	1720	2595	1545	1920
LUS26-3	18	4 5/8	4 3/16	2	3 1/4	4-16d	4-16d	1720	2595	1545	2340
LUS28	18	1 9/16	6 5/8	1 3/4	3 3/4	6-10d	4-10d	1420	2520	1290	1790
LUS28-2	18	3 1/8	7	2	4	6-16d	4-16d	1720	3325	1545	2575
LUS28-3	18	4 5/8	6 1/4	2	3 1/4	6-16d	4-16d	1720	3325	1545	2375
LUS210	18	1 9/16	7 13/16	1 3/4	3 7/8	8-10d	4-10d	1420	2785	1290	2210
LUS210-2	18	3 1/8	9	2	6	8-16d	6-16d	2580	4500	2320	3195
LUS210-3	18	4 5/8	8 3/16	2	5 1/4	8-16d	6-16d	2580	3345	2320	2375

1. d_e is the distance from the seat of the hanger to the highest joist nail.

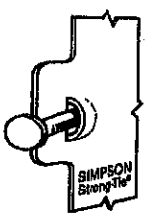

Dome Double Shear Nailing prevents tabs breaking off (available on some models).

U.S. Patent 5,603,580

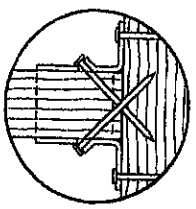

Double Shear Nailing Top View.

LICENSED PROFESSIONAL ENGINEER
01/13/2015
B. D. BUNTING
PROVINCE OF ONTARIO

HUS/LJS – Double Shear Joist Hangers

SIMPSON Strong-Tie®

All hangers have double shear nailing. This patented innovation distributes the load through two points on each joist nail for greater strength. It also allows the use of fewer nails, faster installation and the use of common nails for all connections. Do not bend or remove tabs.

MATERIAL: See table

FINISH: G90 galvanized

DESIGN:

- Factored resistances are in accordance with CSA O86-14
- Uplift resistances have been increased 15% No further increase is permitted
- Wood shear is not considered in the factored resistances given. The specifier must ensure that the joist and header capacities are capable of withstanding these loads.

INSTALLATION:

- Use all specified fasteners
- Nails: 16d = 0.162" dia. x 3½" long common wire
- Double shear nails must be driven at an angle through the joist or truss into the header to achieve the table loads
- Not designed for welded or nailer applications

OPTIONS:

- See current catalogue for options

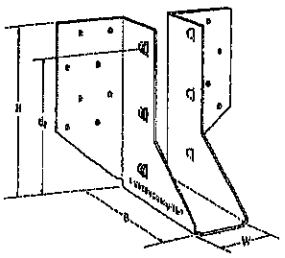

LJS26DS

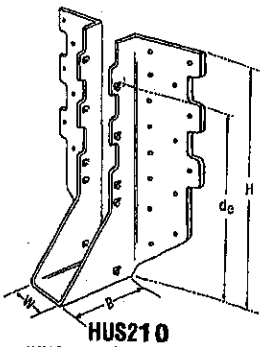

HUS210
(HUS26, HUS2B, similar)

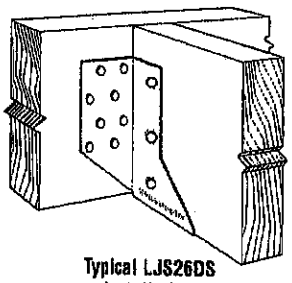

Typical LJS26DS Installation

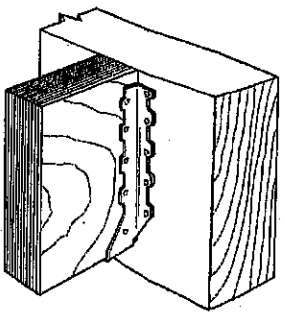

Typical HUS Installation

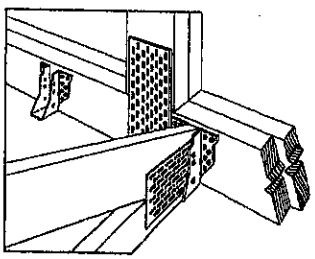

Typical HUS Installation (Truss Designer to provide fastener quantity for connecting multiple members together)

Model No.	Ga	Dimensions (in)				Fasteners		Factored Resistance (lbs)			
								D.Fir-L		S-P-F	
		W	H	B	d_e[1]	Face	Joist	Uplift (K_D=1.15)	Normal (K_D=1.00)	Uplift (K_D=1.15)	Normal (K_D=1.00)
LJS26DS	18	1 9/16	5	3½	4⅝	16-16d	6-16d	2055	4265	1460	4115
HUS26	16	1⅝	5⅜	3	3 15/16	14-16d	6-16d	2705	4940	2065	3875
HUS28	16	1⅝	7 3/32	3	6 3/32	22-16d	8-16d	3605	5365	2675	4345
HUS210	16	1⅝	9 3/32	3	7 31/32	30-16d	10-16d	4505	5795	4010	4740
HUS1.81/10	16	1 13/16	9	3	8	30-16d	10-16d	4505	6450	4010	5200

1. d_e is the distance from the seat of the hanger to the highest joist nail.

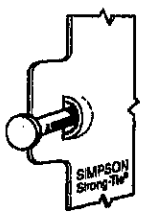

Dome Double Shear Nailing prevents tabs breaking off (available on some models).

U.S. Patent 5,603,580

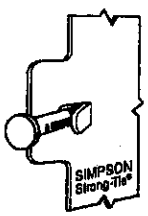

Double Shear Nailing Side View. Do not bend tab back.

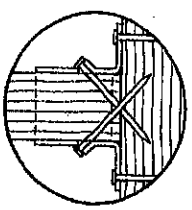

Double Shear Nailing Top View.

LICENSED PROFESSIONAL ENGINEER
01/13/2015
B. D. BUNTING
PROVINCE OF ONTARIO

HHUS – Double Shear Joist Hangers

SIMPSON Strong-Tie®

All HHUS hangers have double shear nailing. This patented innovation distributes the load through two points on each joist nail for greater strength. It also allows the use of fewer nails, faster installation and the use of common nails for all connections. Do not bend or remove tabs.

MATERIAL: 14 gauge

FINISH: G90 galvanized

DESIGN:

- Factored resistances are in accordance with CSA O86-14
- Uplift resistances have been increased 15%. No further increase is permitted.
- Wood shear is not considered in the factored resistances given. The specifier must ensure that the joist and header capacities are capable of withstanding these loads.

INSTALLATION:

- Use all specified fasteners
- Nails: 16d = 0.162" dia. x 3½" long common wire
- Double shear nails must be driven at an angle through the joist or truss into the header to achieve the table loads
- Not designed for welded or nailer applications

OPTIONS:

- See current catalogue for options

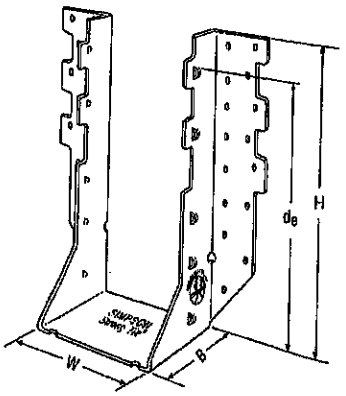

HHUS410

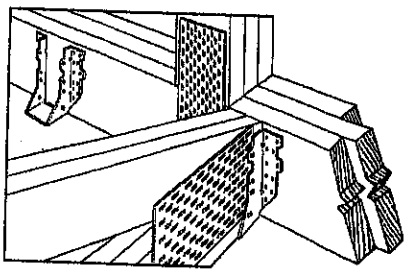

Typical HHUS Installation (Truss Designer to provide fastener quantity for connecting multiple members together)

Model No.	Ga	Dimensions (in)				Fasteners		Factored Resistance (lbs)			
								D.Fir-L		S-P-F	
		W	H	B	d_e[1]	Face	Joist	Uplift (K_D=1.15)	Normal (K_D=1.00)	Uplift (K_D=1.15)	Normal (K_D=1.00)
HHUS26-2	14	3 5/16	5 13/16	3	3 15/16	14-16d	6-16d	2850	7335	2065	5205
HHUS28-2	14	3 5/16	7 7/32	3	6 5/32	22-16d	8-16d	3765	8940	2675	6345
HHUS210-2	14	3 5/16	9 3/32	3	8	30-16d	10-16d	4745	9660	4310	7000
HHUS210-3	14	4 11/16	9	3	7 15/16	30-16d	10-16d	4745	10545	4310	7485
HHUS210-4	14	6 1/8	8 29/32	3	7 27/32	30-16d	10-16d	4745	10545	4310	7485
HHUS46	14	3 5/8	5 13/32	3	3 15/16	14-16d	6-16d	2540	7335	2065	5205
HHUS48	14	3 5/8	7 1/8	3	6 1/8	22-16d	8-16d	3765	8945	2675	6345
HHUS410	14	3 5/8	9	3	8	30-16d	10-16d	4745	9855	4310	7000
HHUS5.50/10	14	5 1/2	9	3	8	30-16d	10-16d	4745	10545	4310	7485
HHUS7.25/10	14	7 1/4	9	3 5/16	7 23/32	30-16d	10-16d	4745	10770	4310	7650

1. d_e is the distance from the seat of the hanger to the highest joist nail.

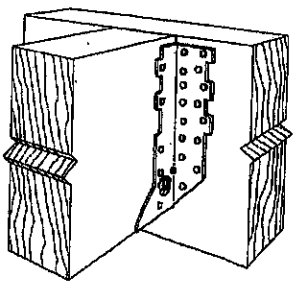

Typical HHUS Installation

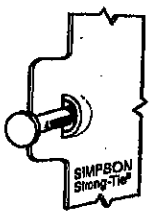

Dome Double Shear Nailing prevents tabs breaking off (available on some models).

U.S. Patent 5,603,580

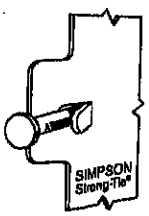

Double Shear Nailing Side View. Do not bend tab back.

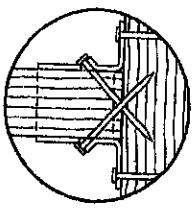

Double Shear Nailing Top View.

LICENSED PROFESSIONAL ENGINEER
01/13/2015
B. D. BUNTING
PROVINCE OF ONTARIO

STRACON ENGINEERING INC.

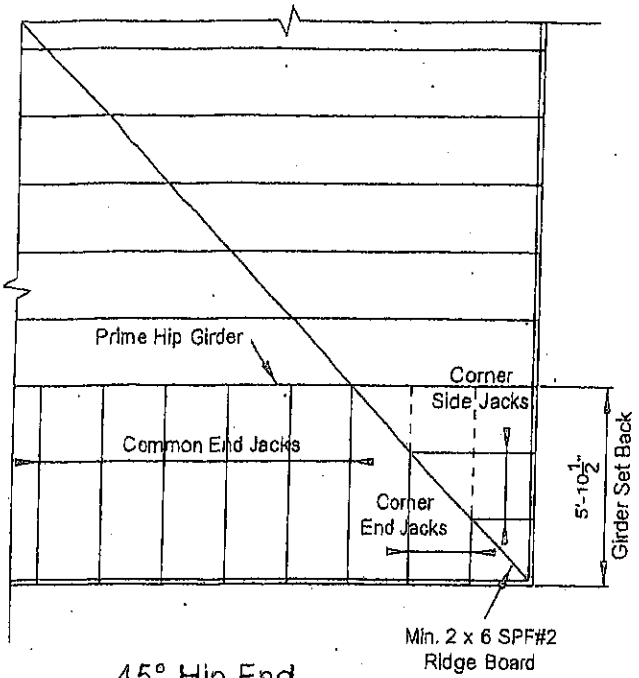

45° Hip End

LUMBER SPECIFICATION

TOP CHORD	:	2 x 4 SPF#2
BOTTOM CHORD	:	2 x 4 SPF#2
WEBS	:	2 x 3 SPF#2

UNLESS OTHERWISE SHOWN

DESIGN LOAD

TOP CHORD SNOW LOAD	:	40.5	P.S.F.
TOP CHORD DEAD LOAD	:	3.0	P.S.F.
BOTTOM CHORD LIVE LOAD	:	0.0	P.S.F.
BOTTOM CHORD DEAD LOAD	:	7.0	P.S.F.
TOTAL LOAD	:	50.5	P.S.F

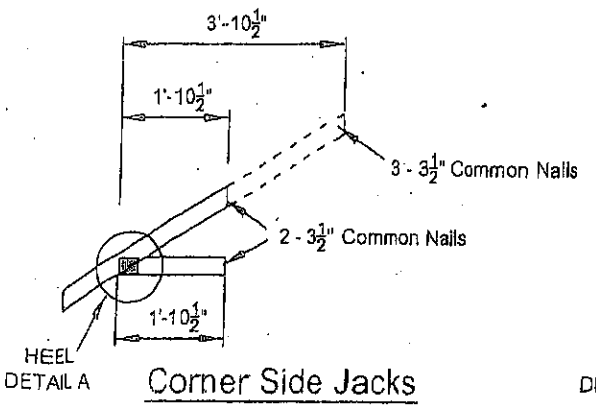

Corner Side Jacks

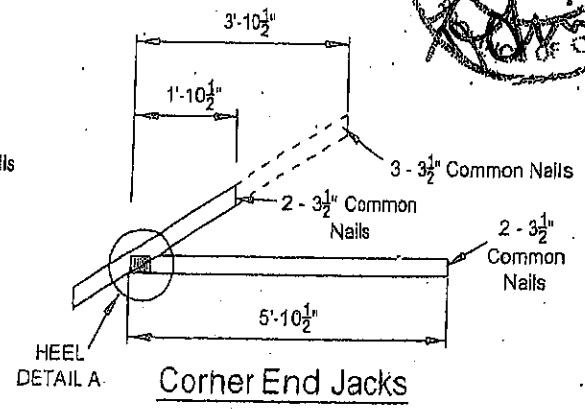

Corner End Jacks

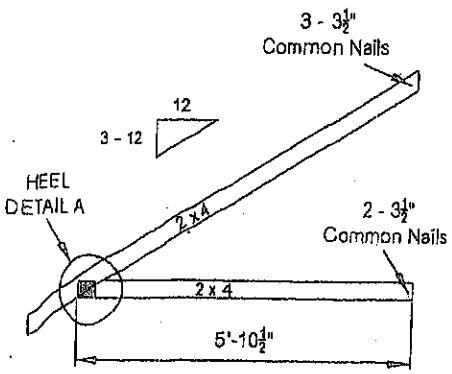

Common End Jacks

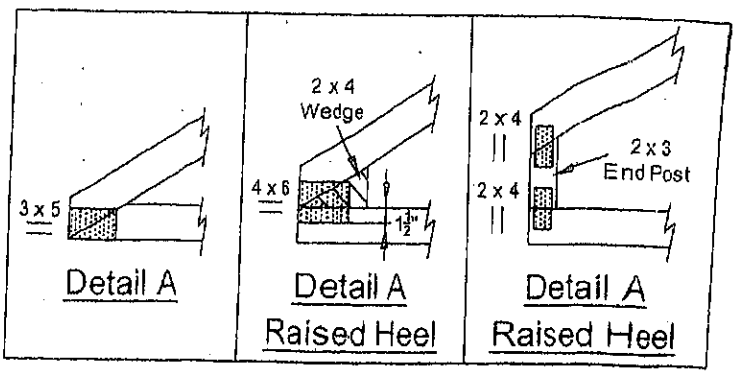

NOTE: DESIGN CONFORMS TO PART 9, O.B.C. 2012 (L.S.D. DESIGN)

CS-51008

STRACON ENGINEERING INC.

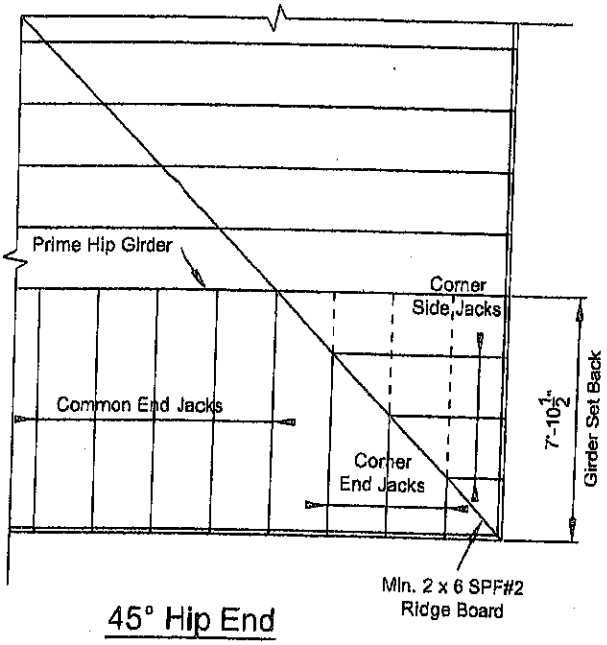

45° Hip End

LUMBER SPECIFICATION

TOP CHORD	:	2 x 4 SPF#2
BOTTOM CHORD	:	2 x 4 SPF#2
WEBS	:	2 x 3 SPF#2

UNLESS OTHERWISE SHOWN

DESIGN LOAD

TOP CHORD SNOW LOAD	:	34.8 P.S.F.
TOP CHORD DEAD LOAD	:	3.0 P.S.F.
BOTTOM CHORD LIVE LOAD	:	0.0 P.S.F.
BOTTOM CHORD DEAD LOAD	:	7.0 P.S.F.
TOTAL LOAD	:	44.8 P.S.F

REGISTERED PROFESSIONAL ENGINEER
JAN 15/2013
E. FOK
PROVINCE OF ONTARIO

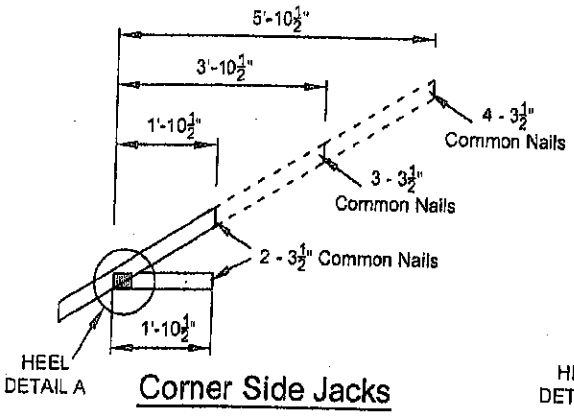

Corner Side Jacks

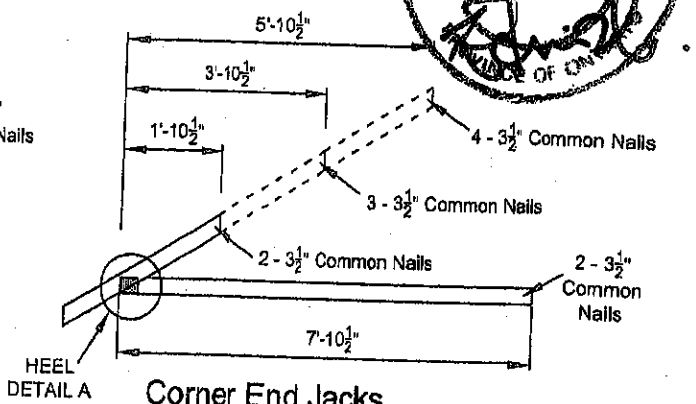

Corner End Jacks

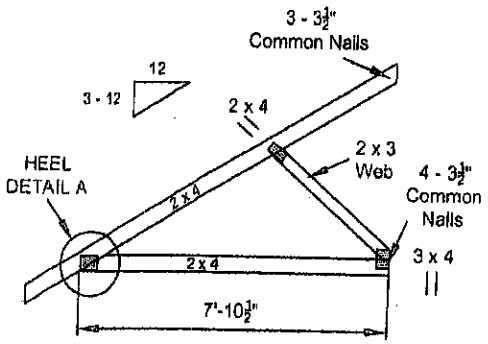

Common End Jacks

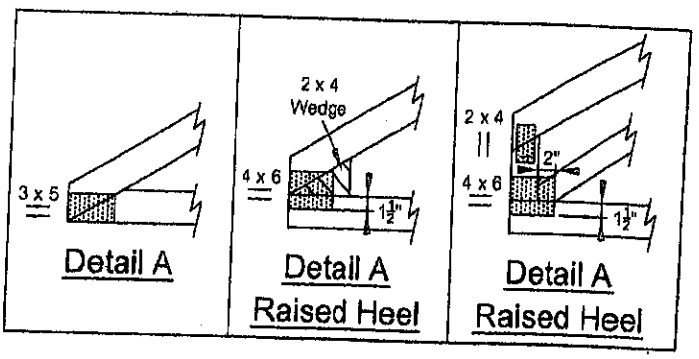

NOTE: DESIGN CONFORMS TO PART 9, O.B.C. 2012 (L.S.D. DESIGN)

CS-71008N