ALL CONC.FRAMING TO CONFORM WITH PART9 OF O.B.C.2012 ROOF RAFTERS THAT CROSS MEET OVER TRUSSES TO BE 2X4 SPF#2@ 24"O.C.WITH A VERT.POST TO THE TRUSS UNDERNEATH AT EACH CROSS PT. VERT.POST LONGER THAN 6" TO HAVE LATERAL BRACING SO THAT THE DIST.BETWEEN END PT.& BETWEEN ROWS OF BRACING DOES NOT EXCEED 6'

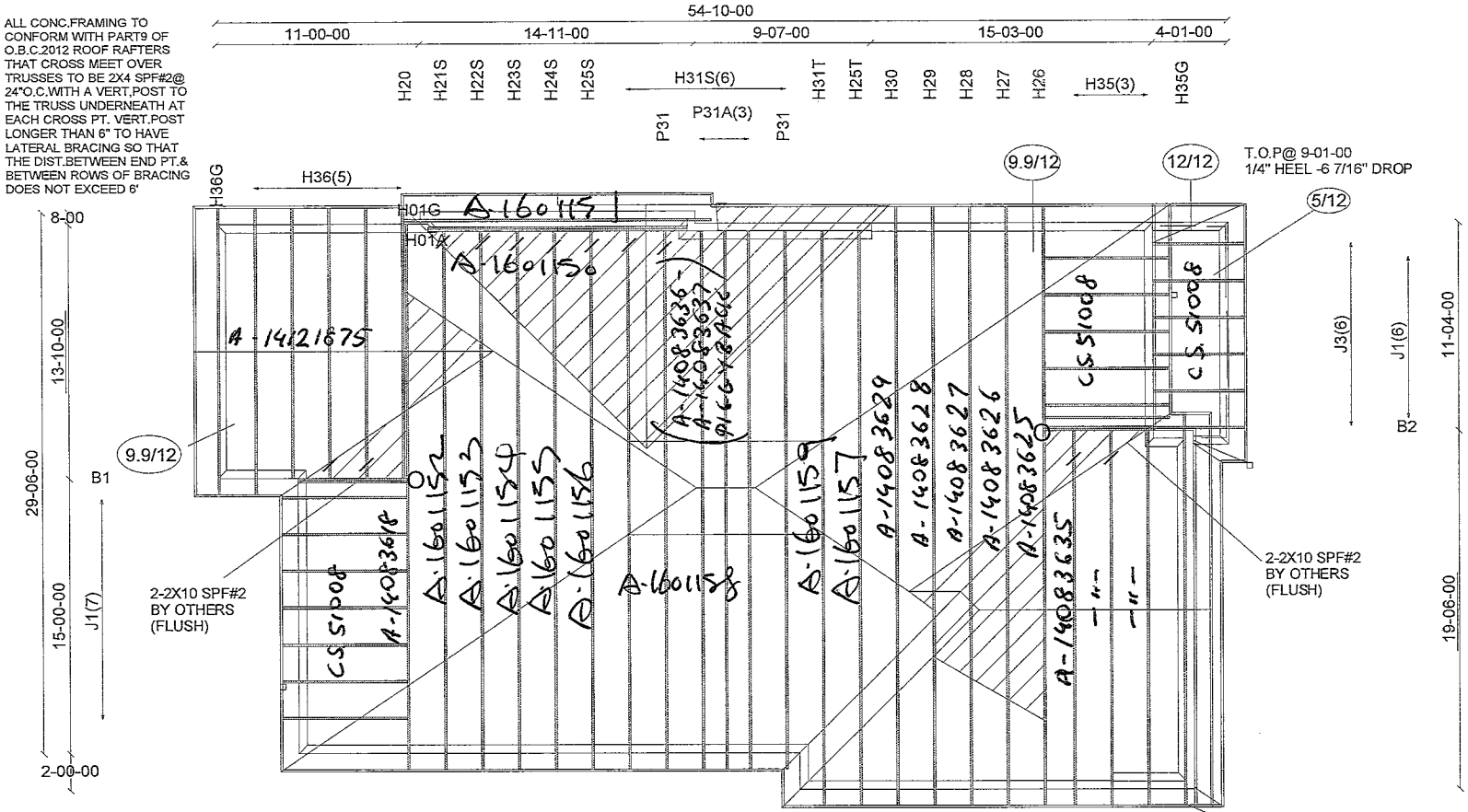

12" FIN. OH.
RSD HEEL-0"DROP
(2"X6" FASCIA)-FM
ASPHALT SHINGLES
2"X6"BRG./SIDING.
LOWER ROOF BY OTHERS

PIGGYBACK TRS
PURLINES BY OTHERS

/ LJS26DS
O HHUS26-2

4-04-00 | 27-02-00 | 21-05-00 | 1-11-00

CONVENTIONAL FRAMING BY OTHERS

Mitek Ver:7.6.2

Job Track: 31379	Builder / Location: ESQUIRE HOMES / CLARINGTON		Model / Elevation: 37-8 COR. / B
Layout ID: 263307	Project: NORTHGLEN		
Plan Log: 84245	Date: 1/5/2016	Designer: JERZY	

THESE DRAWINGS CONSTITUTE THE PROPERTY OF ALPA ROOF TRUSSES INC., SHALL NOT BE REPRODUCED, PUBLISHED, OR REDISTRIBUTED IN ANY MANNER OR UTILIZED FOR ANY PURPOSE OTHER THAN THE MANUFACTURE OF TRUSSES BY ALPA ROOF TRUSSES INC AND WILL BE RETRACTED BY ALPA ROOF TRUSSES INC IF UTLILZED FOR ANY OTHER PURPOSE.

Stracon Engineering Inc.

69 Graydon Crescent
Richmond Hill, Ontario
L4B 3W7
(905) 832-2250 Fax (905) 832-0286

REGISTERED PROFESSIONAL ENGINEER
E. FOK
PROVINCE OF ONTARIO

RESPONSIBILITIES

1. Stracon Engineering Inc. is responsible for the design of trusses as individual components.
2. It is the responsibility of others to ascertain that the design loads utilized on this drawing meet or exceed the actual dead load imposed by the structure and the live load imposed by the local building code or the authorities with jurisdictions.
3. All dimensions are to be verified by owner contractor, architect or other authority before manufacture.
4. Stracon Engineering Inc. bears no responsibility for the erection of the trusses. Persons erecting trusses are cautioned to seek professional advice regarding temporary and permanent bracing system. Bracing shown on Stracon Engineering Inc. drawings is specified for the truss as a component only and forms an integral part of the truss design.
5. It is the truss manufacture's responsibility to ensure that trusses are manufactured in conformance with Stracon Engineering Inc. specifications outlined below.

SPECIFICATIONS

1. Trusses designed by Stracon Engineering Inc. conforms to the relevant section of the Ontario Building Code of Canada (Part 9 or Part 4) or to the Canadian code for farm buildings, whichever applies to the building type indicated on the drawings as well as to the procedures established by the truss plate institute of Canada. Unit stresses used are as per CSA-086-09.
2. Lumber is to be the sizes and grade specified.
3. Moisture content of lumber is not to exceed 19% in service unless otherwise specified.
4. Lumber not to be treated with chemicals unless otherwise specified.
5. Plates shall be applied to both faces of the truss at each joint and shall be positioned as specified.
6. The top chord is assumed to be continuously laterally braced by the roof sheathing or purlins at intervals not exceeding 12.5 times in thickness.
7. Where not rigid ceiling is attached directly to the bottom chord, laterally brace the chords at intervals not exceeding 3M (10') o.c.

January 15, 2014

JOB NAME	TRUSS NAME	QUANTITY	PLY	JOB DESC.	DRWG NO.
263307	H01A	1	2	TRUSS DESC.	

Alpa Roof Truss, Maple

Version 7.640 S Oct 7 2015 MiTek Industries, Inc. Wed Jan 06 14:26:02 2016 Page 1

ID:o0wwtrWZe_90BmC?YOgW1cynpYC-4wyrQx0DqWE?uHh9CO7v4_2yjdWKOZU0hlJj5zzy3Qp

Scale = 1:44.9

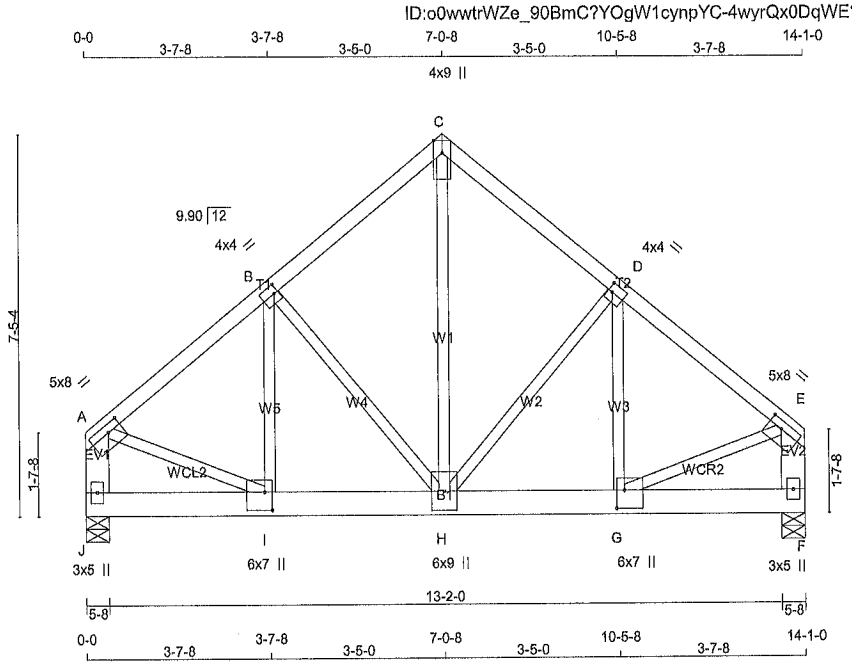

TOTAL WEIGHT = 2 X 76 = 152 lb [M]

LUMBER

N. L. G. A. RULES

CHORDS	SIZE		LUMBER	DESCR.
A - C	2x4	DRY	No.2	SPF
C - E	2x4	DRY	No.2	SPF
J - A	2x6	DRY	No.2	SPF
F - E	2x6	DRY	No.2	SPF
J - F	2x6	DRY	No.2	SPF
ALL WEBS EXCEPT	2x3	DRY	No.2	SPF

DRY: SEASONED LUMBER.

DESIGN CONSISTS OF 2 TRUSSES BUILT SEPARATELY THEN FASTENED TOGETHER AS FOLLOWS:

CHORDS	#ROWS	SURFACE SPACING (IN)	LOAD(PLF)
TOP CHORDS : (0.122"X3") SPIRAL NAILS			
A- C	1	12	TOP
C- E	1	12	TOP
J- A	2	12	TOP
F- E	2	12	TOP
BOTTOM CHORDS : (0.122"X3") SPIRAL NAILS			
J- F	2	6	SIDE(404.8)
WEBS : (0.122"X3") SPIRAL NAILS			
2x3	1	6	

NAILS TO BE DRIVEN FROM ONE SIDE ONLY.

TOP - COMPONENTS ARE LOADED FROM THE TOP AND MUST BE PLACED ON TOP EDGE OF ALL PLIES FOR THE LOAD TO BE TRANSFERRED TO EACH PLY.

SIDE - PLF SHOWN IS THE EQUIVALENT UDL APPLIED TO ONE SIDE THAT THE CORRESPONDING NAILING PATTERN SHALL BE CAPABLE OF TRANSFERING. REMAINING PLF MUST BE APPLIED ON THE OPPOSITE SIDE OR ON THE TOP.

PLATES (table is in Inches)

JT	TYPE	PLATES	W	LEN	Y	X
A	TMVW-t	MT20	5.0	8.0	1.75	3.25
B	TMWW-t	MT20	4.0	4.0	2.00	1.00
C	TTW+p	MT20	4.0	9.0	Edge	
D	TMWW-t	MT20	4.0	4.0	2.00	1.00
E	TMVW-t	MT20	5.0	8.0	1.75	3.25

DIMENSIONS, SUPPORTS AND LOADINGS SPECIFIED BY FABRICATOR TO BE VERIFIED BY BUILDING DESIGNER

BEARINGS

JT	FACTORED GROSS REACTION VERT	HORZ	MAXIMUM FACTORED GROSS REACTION DOWN	HORZ	UPLIFT	INPUT BRG IN-SX	REQRD BRG IN-SX
J	6564	0	6564	0	0	5-8	5-3
F	6564	0	6564	0	0	5-8	5-3

UNFACTORED REACTIONS

JT	1ST LCASE COMBINED	SNOW	MAX./MIN. COMPONENT REACTIONS LIVE	PERM.LIVE	WIND	DEAD	SOIL
J	5304	3109 / 0	1124 / 0	0 / 0	0 / 0	1071 / 0	0 / 0
F	5304	3109 / 0	1124 / 0	0 / 0	0 / 0	1071 / 0	0 / 0

BEARING MATERIAL TO BE SPF NO.2 OR BETTER AT JOINT(S) J, F

BRACING

TOP CHORD TO BE SHEATHED OR MAX. PURLIN SPACING = 3.92 FT.
MAX. UNBRACED BOTTOM CHORD LENGTH = 10.00 FT. OR RIGID CEILING DIRECTLY APPLIED.

ALL PITCH BREAKS AND PERIMETER CORNER JOINTS MUST BE LATERALLY RESTRAINED.

LOADING

TOTAL LOAD CASES: (4)

CHORDS

MEMB. FR-TO	MAX. FACTORED FORCE (LBS)	FACTORED VERT. LOAD (PLF) FROM	TO	LC1	MAX CSI (LC)	MAX. UNBRAC LENGTH
A- B	-5712 / 0	-94.6	-94.6	0.23 (1)	3.92	
B- C	-4415 / 0	-94.6	-94.6	0.16 (1)	4.44	
C- D	-4415 / 0	-94.6	-94.6	0.16 (1)	4.44	
D- E	-5712 / 0	-94.6	-94.6	0.23 (1)	3.92	
J- A	-5268 / 0	0.0	0.0	0.19 (1)	6.37	
F- E	-5268 / 0	0.0	0.0	0.19 (1)	6.37	
J- I	0 / 0	-837.6	-837.6	0.37 (1)	10.00	
I- H	0 / 4415	-837.6	-837.6	0.58 (1)	10.00	
H- G	0 / 4415	-837.6	-837.6	0.58 (1)	10.00	
G- F	0 / 0	-837.6	-837.6	0.37 (1)	10.00	

WEBS

MEMB. FR-TO	MAX. FACTORED FORCE (LBS)	MAX CSI (LC)
H- C	0 / 5319	0.66 (1)
H- D	-1614 / 0	0.40 (1)
G- D	0 / 1722	0.21 (1)
B- H	-1614 / 0	0.40 (1)
I- B	0 / 1722	0.21 (1)
A- I	0 / 4654	0.58 (1)
G- E	0 / 4654	0.58 (1)

DESIGN CRITERIA

SPECIFIED LOADS:

TOP CH.	LL	=	29.0	PSF
	DL	=	3.0	PSF
BOT CH.	LL	=	10.5	PSF
	DL	=	7.0	PSF
TOTAL LOAD		=	49.5	PSF

SPACING = 24.0 IN. C/C

GIRDER TYPE: CStdGirder
START DISTANCE = 0-0
START SPAN CARRIED = 28-5-0
END DISTANCE = 14-1-0
END SPAN CARRIED = 28-5-0
END WALL WIDTH = 0-0
APPLIED TO FRONT SIDE OF BOTTOM CHORD.
- ADDT'L LOADS BASED ON 55 % OF GSL.

THIS TRUSS IS DESIGNED FOR RESIDENTIAL OR SMALL BUILDING REQUIREMENTS OF PART 9, NBCC 2010

THIS DESIGN COMPLIES WITH:
- PART 9 OF OBC 2012 , BCBC 2012 , ABC 2014
- CSA 086-09
- TPIC 2011

(55 % OF 37.6 P.S.F. G.S.L. PLUS 8.4 P.S.F. RAIN LOAD) EQUALS 29.0 P.S.F. SPECIFIED ROOF LIVE LOAD

ALLOWABLE DEFL.(LL)= L/360 (0.47")
CALCULATED VERT. DEFL.(LL) = L/ 999 (0.06")
ALLOWABLE DEFL.(TL)= L/360 (0.47")
CALCULATED VERT. DEFL.(TL) = L/ 999 (0.10")

CSI: TC=0.23 (D-E:1) , BC=0.58 (G-H:1) , WB=0.66 (C-H:1) , SSI=0.58 (F-G:1)

DOL LUMBER=1.00 NAIL=1.00 LS BEND=1.00 COMP=1.00 SHEAR=1.00 TENS= 1.00

COMPANION LIVE LOAD FACTOR = 0.50

AUTOSOLVE HEELS OFF

TRUSS PLATE MANUFACTURER IS NOT RESPONSIBLE FOR QUALITY CONTROL IN THE TRUSS MANUFACTURING PLANT .

NAIL VALUES

PLATE	GRIP(DRY) (PSI) MAX	MIN	SHEAR (PLI) MAX	MIN	SECTION (PLI) MAX	MIN
MT20	618	354	1667	822	2284	1656

PLATE PLACEMENT TOL. = 0.250 Inches

PLATE ROTATION TOL. = 5.0 Deg.

JSI GRIP= 0.89 (E) (INPUT = 0.90)
JSI METAL= 0.55 (A) (INPUT = 1.00)

A-1601150

CONTINUED ON PAGE 2

PLATES (table is in inches)

JT	TYPE	PLATES	W	LEN	Y	X
F	BMV1+p	MT20	3.0	5.0		
G	BMWW+t	MT20	6.0	7.0	4.25	1.75
H	BMWWW+t	MT20	6.0	9.0		
I	BMWW+t	MT20	6.0	7.0	4.25	1.75
J	BMV1+p	MT20	3.0	5.0		

Edge - INDICATES REFERENCE CORNER OF PLATE TOUCHES EDGE OF CHORD.

NOTES- (1)

1) Lateral brace(s) shown shall be 1x4 for Part 9 design as per OBC 9.23.13.11, and no less than 2x4 for Part 4 design.

REGISTERED PROFESSIONAL ENGINEER
06/01/2016
EDWIN C. FOK
PROVINCE OF ONTARIO

A-1601150(2)

JOB NAME	TRUSS NAME	QUANTITY	PLY	JOB DESC.	DRWG NO.
263307	H01G	1	1	TRUSS DESC.	

Alpa Roof Truss, Maple

Version 7.640 S Oct 7 2015 MiTek Industries, Inc. Wed Jan 06 14:26:08 2016 Page 1

ID:o0wwtrWZe_90BmC?YOgW1cynpYC-v3J6h?4_QM_9cC8JYfEKKFI?p2ITOOlv3dm1Jczy3Qj

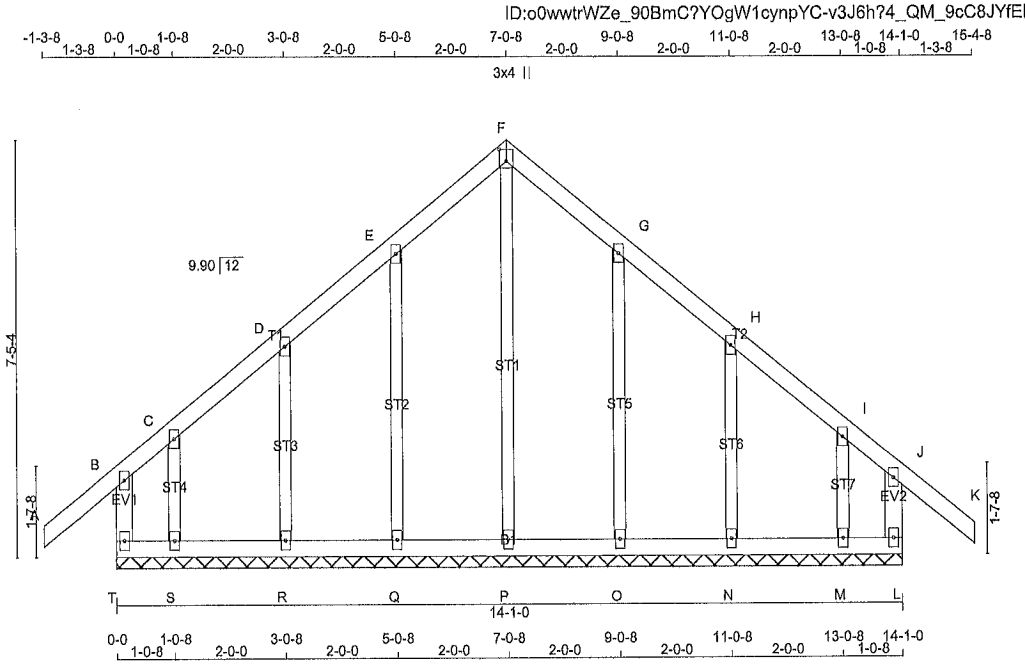

TOTAL WEIGHT = 67 lb

[M]

LUMBER

N. L. G. A. RULES

CHORDS	SIZE		LUMBER	DESCR.
A - F	2x4	DRY	No.2	SPF
F - K	2x4	DRY	No.2	SPF
T - B	2x4	DRY	No.2	SPF
L - J	2x4	DRY	No.2	SPF
T - L	2x4	DRY	No.2	SPF
ALL WEBS	2x3	DRY	No.2	SPF
ALL GABLE WEBS	2x3	DRY	No.2	SPF

DRY: SEASONED LUMBER.

GABLE STUDS SPACED AT 2-0-0 OC.

PLATES (table is in inches)

JT	TYPE	PLATES	W	LEN	Y	X
B	TMV+p	MT20	2.0	4.0		
C, D, E, G, H, I						
C	TMW+w	MT20	2.0	4.0		
F	TTW+p	MT20	3.0	4.0	2.50	1.50
J	TMV+p	MT20	2.0	4.0		
L	BMV1+p	MT20	2.0	4.0		
M, N, O, P, Q, R, S						
M	BMW1+w	MT20	2.0	4.0		
T	BMV1+p	MT20	2.0	4.0		

NOTES- (1)

1) Lateral brace(s) shown shall be 1x4 for Part 9 design as per OBC 9.23.13.11, and no less than 2x4 for Part 4 design.

DIMENSIONS, SUPPORTS AND LOADINGS SPECIFIED BY FABRICATOR TO BE VERIFIED BY BUILDING DESIGNER

BEARINGS

THIS TRUSS DESIGNED FOR CONTINUOUS BEARINGS.

THIS TRUSS REQUIRES RIGID SHEATHING ON EXPOSED FACE.

BEARING MATERIAL TO BE SPF NO.2 OR BETTER AT JOINT(S)

BRACING

TOP CHORD TO BE SHEATHED OR MAX. PURLIN SPACING = 6.25 FT.
MAX. UNBRACED BOTTOM CHORD LENGTH = 6.25 FT. OR RIGID CEILING DIRECTLY APPLIED.

ALL PITCH BREAKS AND PERIMETER CORNER JOINTS MUST BE LATERALLY RESTRAINED.

LOADING

TOTAL LOAD CASES: (4)

CHORDS MEMB. FR-TO	MAX. FACTORED FORCE (LBS)	FACTORED VERT. LOAD LC1 (PLF) FROM	TO	MAX CSI (LC)	MAX. UNBRAC LENGTH
A- B	0 / 42	-94.6	-94.6	0.13 (1)	10.00
B- C	-14 / 0	-94.6	-94.6	0.09 (1)	6.25
C- D	0 / 29	-94.6	-94.6	0.05 (1)	10.00
D- E	0 / 29	-94.6	-94.6	0.05 (1)	10.00
E- F	0 / 32	-94.6	-94.6	0.05 (1)	10.00
F- G	0 / 32	-94.6	-94.6	0.05 (1)	10.00
G- H	0 / 29	-94.6	-94.6	0.05 (1)	10.00
H- I	0 / 29	-94.6	-94.6	0.05 (1)	10.00
I- J	-14 / 0	-94.6	-94.6	0.09 (1)	6.25
J- K	0 / 42	-94.6	-94.6	0.13 (1)	10.00
T- B	-215 / 0	0.0	0.0	0.04 (1)	7.81
L- J	-215 / 0	0.0	0.0	0.04 (1)	7.81
T- S	-14 / 0	-28.0	-28.0	0.02 (3)	6.25
S- R	-17 / 0	-28.0	-28.0	0.02 (2)	6.25
R- Q	-22 / 0	-28.0	-28.0	0.02 (2)	6.25
Q- P	-26 / 0	-28.0	-28.0	0.02 (2)	6.25
P- O	-26 / 0	-28.0	-28.0	0.02 (2)	6.25
O- N	-22 / 0	-28.0	-28.0	0.02 (2)	6.25
N- M	-17 / 0	-28.0	-28.0	0.02 (2)	6.25
M- L	-14 / 0	-28.0	-28.0	0.02 (3)	6.25

WEBS MEMB. FR-TO	MAX. FACTORED FORCE (LBS)	MAX CSI (LC)
P- F	-237 / 0	0.23 (1)
Q- E	-192 / 0	0.10 (1)
R- D	-195 / 0	0.05 (1)
S- C	-76 / 0	0.01 (1)
O- G	-192 / 0	0.10 (1)
N- H	-195 / 0	0.05 (1)
M- I	-76 / 0	0.01 (1)

DESIGN CRITERIA

SPECIFIED LOADS:

TOP CH.	LL	=	29.0	PSF
	DL	=	3.0	PSF
BOT CH.	LL	=	10.5	PSF
	DL	=	7.0	PSF
TOTAL LOAD		=	49.5	PSF

SPACING = 24.0 IN. C/C

THIS TRUSS IS DESIGNED FOR RESIDENTIAL OR SMALL BUILDING REQUIREMENTS OF PART 9, NBCC 2010

THIS DESIGN COMPLIES WITH:
- PART 9 OF OBC 2012 , BCBC 2012 , ABC 2014
- CSA 086-09
- TPIC 2011

DESIGN ASSUMPTIONS
-OVERHANG NOT TO BE ALTERED OR CUT OFF.

(55 % OF 37.6 P.S.F. G.S.L. PLUS 8.4 P.S.F. RAIN LOAD) EQUALS 29.0 P.S.F. SPECIFIED ROOF LIVE LOAD

CSI: TC=0.13 (A-B:1) , BC=0.02 (N-O:2) , WB=0.23 (F-P:1) , SSI=0.08 (A-B:1)

DOL LUMBER=1.00 NAIL=1.00 LS BEND=1.10 COMP=1.10 SHEAR=1.10 TENS= 1.10

COMPANION LIVE LOAD FACTOR = 0.50

TRUSS PLATE MANUFACTURER IS NOT RESPONSIBLE FOR QUALITY CONTROL IN THE TRUSS MANUFACTURING PLANT .

NAIL VALUES

PLATE	GRIP(DRY) (PSI) MAX	MIN	SHEAR (PLI) MAX	MIN	SECTION (PLI) MAX	MIN
MT20	618	354	1667	822	2284	1656

PLATE PLACEMENT TOL. = 0.250 Inches

PLATE ROTATION TOL. = 6.0 Deg.

JSI GRIP= 0.31 (F) (INPUT = 0.90)
JSI METAL= 0.08 (F) (INPUT = 1.00)

REGISTERED PROFESSIONAL ENGINEER
06/01/2016
EDWIN C. FOK
PROVINCE OF ONTARIO

A-160115 1

JOB NAME	TRUSS NAME	QUANTITY	PLY	JOB DESC.	DRWG NO.
263307	H21S	1	1	TRUSS DESC.	

Alpa Roof Truss, Maple

Version 7.640 S Oct 7 2015 MiTek Industries, Inc. Wed Jan 06 14:22:07 2016 Page 1

ID:o0wwtrWZe_90BmC?YOgW1cynpYC-TlF?5bApAJdLBAD?xYPp3RqhnvLpqMVReeunM4zy3UU

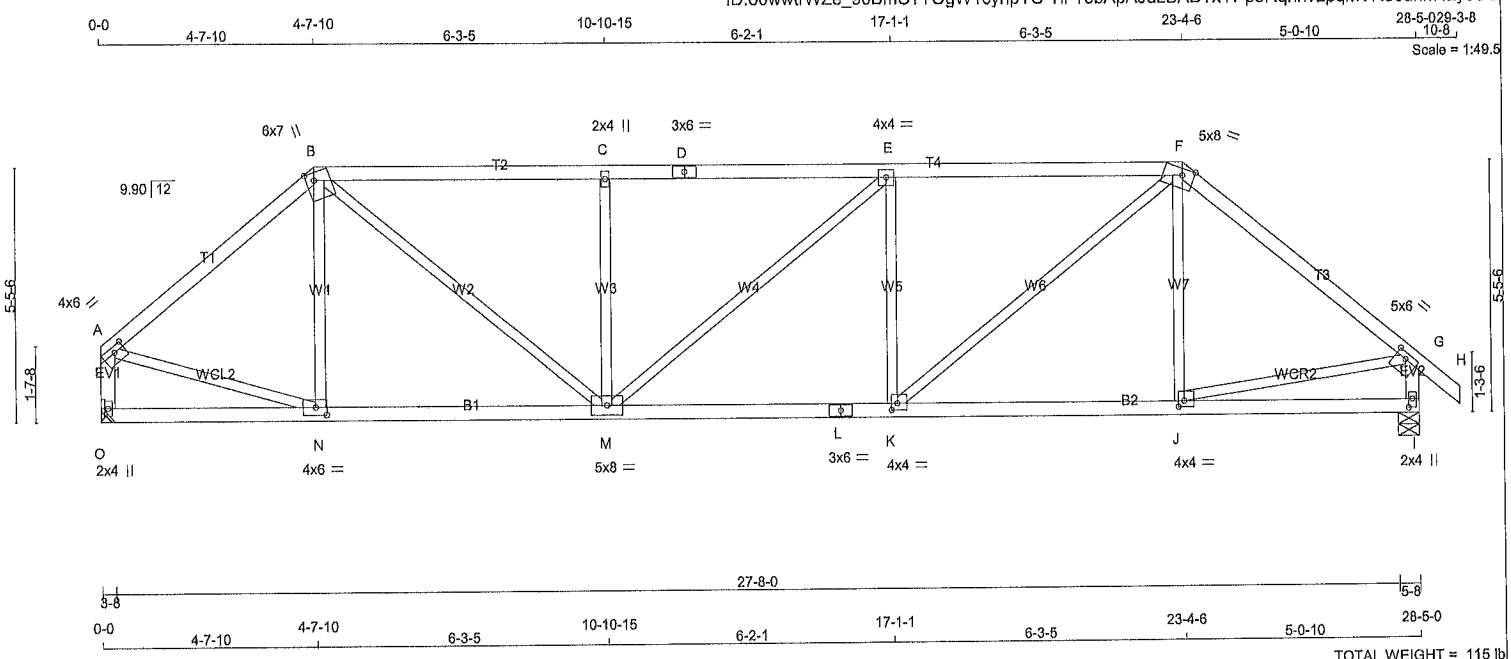

TOTAL WEIGHT = 115 lb

[M]

LUMBER

N. L. G. A. RULES

CHORDS	SIZE		LUMBER	DESCR.
A - B	2x4	DRY	No.2	SPF
B - D	2x4	DRY	No.2	SPF
D - F	2x4	DRY	No.2	SPF
F - H	2x4	DRY	No.2	SPF
O - A	2x4	DRY	No.2	SPF
I - G	2x4	DRY	No.2	SPF
O - L	2x4	DRY	No.2	SPF
L - I	2x4	DRY	No.2	SPF
ALL WEBS EXCEPT	2x3	DRY	No.2	SPF

DRY: SEASONED LUMBER.

PLATES (table is in inches)

JT	TYPE	PLATES	W	LEN	Y	X
A	TMVW-t	MT20	4.0	6.0	1.50	2.75
B	TTWW+m	MT20	6.0	7.0	2.00	2.00
C	TMW+w	MT20	2.0	4.0		
D	TS-t	MT20	3.0	6.0		
E	TMWW-t	MT20	4.0	4.0		
F	TTWW-m	MT20	5.0	8.0	1.75	3.00
G	TMVW-t	MT20	5.0	6.0	1.50	2.75
I	BMV1+p	MT20	2.0	4.0	2.25	1.00
J	BMWW-t	MT20	4.0	4.0	1.50	1.50
K	BMWW-t	MT20	4.0	4.0	1.75	1.50
L	BS-t	MT20	3.0	6.0		
M	BMWWW-t	MT20	5.0	8.0		
N	BMWW-t	MT20	4.0	6.0	2.00	2.75
O	BMV1+p	MT20	2.0	4.0		

NOTES- (1)

1) Lateral brace(s) shown shall be 1x4 for Part 9 design as per OBC 9.23.13.11, and no less than 2x4 for Part 4 design.

DIMENSIONS, SUPPORTS AND LOADINGS SPECIFIED BY FABRICATOR TO BE VERIFIED BY BUILDING DESIGNER

BEARINGS

JT	FACTORED GROSS REACTION VERT	HORZ	MAXIMUM FACTORED GROSS REACTION DOWN	HORZ	UPLIFT	INPUT BRG IN-SX	REQRD BRG IN-SX
O	1742	0	1742	0	0	HANGER BY OTHERS MIN. SEAT SIZE: 2-3	
I	1833	0	1833	0	0	5-8	2-7

UNFACTORED REACTIONS

JT	1ST LCASE COMBINED	MAX./MIN. COMPONENT REACTIONS SNOW	LIVE	PERM.LIVE	WIND	DEAD	SOIL
O	1407	825 / 0	298 / 0	0 / 0	0 / 0	284 / 0	0 / 0
I	1469	881 / 0	298 / 0	0 / 0	0 / 0	290 / 0	0 / 0

BEARING MATERIAL TO BE SPF NO.2 OR BETTER AT JOINT(S) I

BRACING

TOP CHORD TO BE SHEATHED OR MAX. PURLIN SPACING = 3.71 FT.
MAX. UNBRACED BOTTOM CHORD LENGTH = 10.00 FT. OR RIGID CEILING DIRECTLY APPLIED.

ALL PITCH BREAKS AND PERIMETER CORNER JOINTS MUST BE LATERALLY RESTRAINED.

LOADING

TOTAL LOAD CASES: (4)

CHORDS

MEMB. FR-TO	MAX. FACTORED FORCE (LBS)	FACTORED VERT. LOAD (PLF) FROM	TO	LC1	MAX CSI (LC)	MAX. UNBRAC LENGTH
A- B	-1737 / 0	-94.6	-94.6	0.44 (1)	4.58	
B- C	-2352 / 0	-94.6	-94.6	0.69 (1)	3.75	
C- D	-2352 / 0	-94.6	-94.6	0.69 (1)	3.74	
D- E	-2352 / 0	-94.6	-94.6	0.69 (1)	3.74	
E- F	-2384 / 0	-94.6	-94.6	0.70 (1)	3.71	
F- G	-1856 / 0	-94.6	-94.6	0.55 (1)	4.33	
G- H	0 / 29	-94.6	-94.6	0.06 (1)	10.00	
O- A	-1693 / 0	0.0	0.0	0.18 (1)	6.39	
I- G	-1778 / 0	0.0	0.0	0.18 (1)	6.26	
O- N	0 / 0	-28.0	-28.0	0.20 (2)	10.00	
N- M	0 / 1333	-28.0	-28.0	0.36 (2)	10.00	
M- L	0 / 2384	-28.0	-28.0	0.49 (1)	10.00	
L- K	0 / 2384	-28.0	-28.0	0.49 (1)	10.00	
K- J	0 / 1427	-28.0	-28.0	0.38 (2)	10.00	
J- I	0 / 0	-28.0	-28.0	0.21 (3)	10.00	

WEBS

MEMB. FR-TO	MAX. FACTORED FORCE (LBS)	MAX CSI (LC)
N- B	-193 / 124	0.09 (1)
B- M	0 / 1317	0.30 (1)
M- C	-636 / 0	0.28 (1)
M- E	-41 / 0	0.06 (1)
K- E	-611 / 0	0.27 (1)
K- F	0 / 1237	0.28 (1)
J- F	-86 / 184	0.04 (3)
A- N	0 / 1386	0.31 (1)
J- G	0 / 1453	0.33 (1)

DESIGN CRITERIA

SPECIFIED LOADS:

TOP CH.	LL	=	29.0	PSF
	DL	=	3.0	PSF
BOT CH.	LL	=	10.5	PSF
	DL	=	7.0	PSF
TOTAL LOAD		=	49.5	PSF

SPACING = 24.0 IN. C/C

LOADING IN FLAT SECTION BASED ON A SLOPE OF 2.00/12 MINIMUM

THIS TRUSS IS DESIGNED FOR RESIDENTIAL OR SMALL BUILDING REQUIREMENTS OF PART 9, NBCC 2010

THIS DESIGN COMPLIES WITH:
- PART 9 OF OBC 2012 , BCBC 2012 , ABC 2014
- CSA 086-09
- TPIC 2011

(65 % OF 37.6 P.S.F. G.S.L. PLUS 8.4 P.S.F. RAIN LOAD) EQUALS 29.0 P.S.F. SPECIFIED ROOF LIVE LOAD

ALLOWABLE DEFL.(LL)= L/360 (0.95")
CALCULATED VERT. DEFL.(LL) = L/ 999 (0.13")
ALLOWABLE DEFL.(TL)= L/360 (0.95")
CALCULATED VERT. DEFL.(TL) = L/ 999 (0.21")

CSI: TC=0.70 (E-F:1) , BC=0.49 (K-M:1) , WB=0.33 (G-J:1) , SSI=0.28 (E-F:1)

DOL LUMBER=1.00 NAIL=1.00 LS BEND=1.10 COMP=1.10 SHEAR=1.10 TENS= 1.10

COMPANION LIVE LOAD FACTOR = 0.50

TRUSS PLATE MANUFACTURER IS NOT RESPONSIBLE FOR QUALITY CONTROL IN THE TRUSS MANUFACTURING PLANT .

NAIL VALUES

PLATE	GRIP(DRY) (PSI) MAX	MIN	SHEAR (PLI) MAX	MIN	SECTION (PLI) MAX	MIN
MT20	618	354	1667	822	2284	1656

PLATE PLACEMENT TOL. = 0.250 Inches

PLATE ROTATION TOL. = 5.0 Deg.

JSI GRIP= 0.89 (O) (INPUT = 0.90)
JSI METAL= 0.59 (L) (INPUT = 1.00)

REGISTERED PROFESSIONAL ENGINEER
06/01/2016
EDWIN C. FOK
PROVINCE OF ONTARIO

A-160115L

JOB NAME	TRUSS NAME	QUANTITY	PLY	JOB DESC.	DRWG NO.
263307	H22S	1	1	TRUSS DESC.	

Alpa Roof Truss, Maple

Version 7.640 S Oct 7 2015 MiTek Industries, Inc. Wed Jan 06 14:22:36 2016 Page 1
ID:o0wwtrWZe_90BmC?YOgW1cynpYC-6HVyBVW0LDGEAdxZ77QckYWbKbEL7OvlJfPptvzy3U1

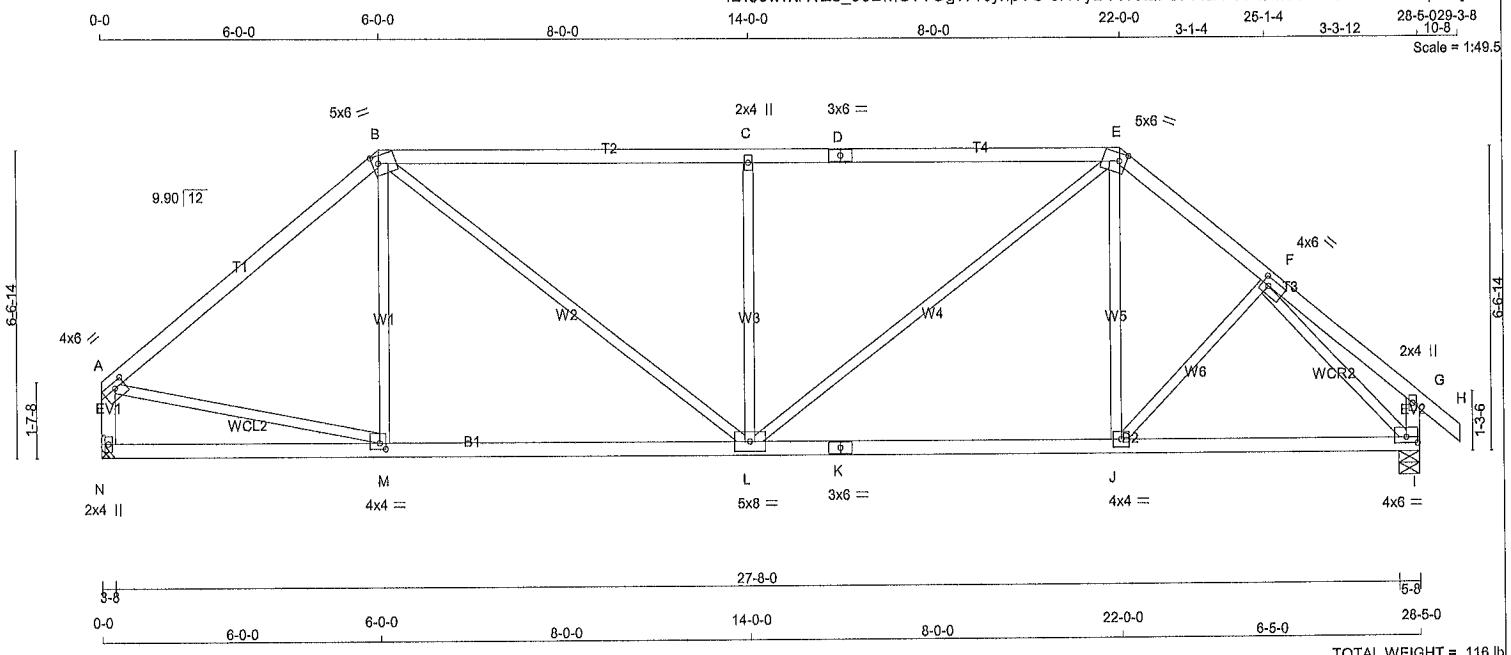

TOTAL WEIGHT = 116 lb

[M]

LUMBER

N. L. G. A. RULES

CHORDS	SIZE		LUMBER	DESCR.
A - B	2x4	DRY	1650F 1.5E	SPF
B - D	2x4	DRY	2100F 1.8E	SPF
D - E	2x4	DRY	2100F 1.8E	SPF
E - H	2x4	DRY	No.2	SPF
N - A	2x4	DRY	No.2	SPF
I - G	2x4	DRY	No.2	SPF
N - K	2x4	DRY	No.2	SPF
K - I	2x4	DRY	No.2	SPF
ALL WEBS EXCEPT	2x3	DRY	No.2	SPF

DRY: SEASONED LUMBER.

PLATES (table is in inches)

JT	TYPE	PLATES	W	LEN	Y	X
A	TMVW-t	MT20	4.0	6.0	1.50	2.75
B	TTWW-m	MT20	5.0	6.0	2.00	1.50
C	TMW+w	MT20	2.0	4.0		
D	TS-t	MT20	3.0	6.0		
E	TTWW-m	MT20	5.0	6.0	2.00	1.75
F	TMWW-t	MT20	4.0	6.0	2.00	1.75
G	TMV+p	MT20	2.0	4.0		
I	BMVW1-t	MT20	4.0	6.0	1.50	3.00
J	BMWW-t	MT20	4.0	4.0		
K	BS-t	MT20	3.0	6.0		
L	BMWWW-t	MT20	5.0	8.0		
M	BMWW-t	MT20	4.0	4.0	1.50	1.50
N	BMV1+p	MT20	2.0	4.0		

NOTES- (1)
1) Lateral brace(s) shown shall be 1x4 for Part 9 design as per OBC 9.23.13.11, and no less than 2x4 for Part 4 design.

DIMENSIONS, SUPPORTS AND LOADINGS SPECIFIED BY FABRICATOR TO BE VERIFIED BY BUILDING DESIGNER

BEARINGS

JT	FACTORED GROSS REACTION VERT	HORZ	MAXIMUM FACTORED GROSS REACTION DOWN	HORZ	UPLIFT	INPUT BRG IN-SX	REQRD BRG IN-SX
N	1742	0	1742	0	0	HANGER BY OTHERS MIN. SEAT SIZE: 2-3	
I	1833	0	1833	0	0	5-8	2-0

UNFACTORED REACTIONS

MAX./MIN. COMPONENT REACTIONS

JT	1ST LCASE COMBINED	SNOW	LIVE	PERM.LIVE	WIND	DEAD	SOIL
N	1407	825 / 0	298 / 0	0 / 0	0 / 0	284 / 0	0 / 0
I	1469	881 / 0	298 / 0	0 / 0	0 / 0	290 / 0	0 / 0

BEARING MATERIAL TO BE SPF NO.2 OR BETTER AT JOINT(S) I

BRACING

TOP CHORD TO BE SHEATHED OR MAX. PURLIN SPACING = 4.39 FT.
MAX. UNBRACED BOTTOM CHORD LENGTH = 10.00 FT. OR RIGID CEILING DIRECTLY APPLIED.

ALL PITCH BREAKS AND PERIMETER CORNER JOINTS MUST BE LATERALLY RESTRAINED.

LOADING

TOTAL LOAD CASES: (4)

CHORDS

MEMB. FR-TO	MAX. FACTORED FORCE (LBS)	FACTORED VERT. LOAD (PLF) FROM	TO	LC1	MAX CSI (LC)	MAX. UNBRAC LENGTH
A- B	-1741 / 0	-94.6	-94.6	0.61 (1)	4.88	
B- C	-2107 / 0	-94.6	-94.6	0.83 (1)	4.39	
C- D	-2108 / 0	-94.6	-94.6	0.83 (1)	4.39	
D- E	-2108 / 0	-94.6	-94.6	0.83 (1)	4.39	
E- F	-1843 / 0	-94.6	-94.6	0.18 (1)	4.78	
F- G	0 / 19	-94.6	-94.6	0.13 (1)	10.00	
G- H	0 / 29	-94.6	-94.6	0.06 (1)	10.00	
N- A	-1679 / 0	0.0	0.0	0.18 (1)	6.41	
I- G	-212 / 0	0.0	0.0	0.02 (1)	7.81	
N- M	0 / 0	-28.0	-28.0	0.33 (3)	10.00	
M- L	0 / 1340	-28.0	-28.0	0.50 (2)	10.00	
L- K	0 / 1406	-28.0	-28.0	0.50 (2)	10.00	
K- J	0 / 1406	-28.0	-28.0	0.50 (2)	10.00	
J- I	0 / 1382	-28.0	-28.0	0.49 (2)	10.00	

WEBS

MEMB. FR-TO	MAX. FACTORED FORCE (LBS)	MAX CSI (LC)
M- B	-66 / 244	0.05 (3)
B- L	0 / 974	0.22 (1)
L- C	-929 / 0	0.66 (1)
L- E	0 / 890	0.20 (1)
J- E	0 / 315	0.07 (2)
J- F	0 / 116	0.03 (3)
A- M	0 / 1371	0.31 (1)
F- I	-2078 / 0	0.76 (1)

DESIGN CRITERIA

SPECIFIED LOADS:

TOP CH.	LL	=	29.0	PSF
	DL	=	3.0	PSF
BOT CH.	LL	=	10.5	PSF
	DL	=	7.0	PSF
TOTAL LOAD		=	49.5	PSF

SPACING = 24.0 IN. C/C

LOADING IN FLAT SECTION BASED ON A SLOPE OF 2.00/12 MINIMUM

THIS TRUSS IS DESIGNED FOR RESIDENTIAL OR SMALL BUILDING REQUIREMENTS OF PART 9, NBCC 2010

THIS DESIGN COMPLIES WITH:
- PART 9 OF OBC 2012 , BCBC 2012 , ABC 2014
- CSA 086-09
- TPIC 2011

(55 % OF 37.6 P.S.F. G.S.L. PLUS 8.4 P.S.F. RAIN LOAD) EQUALS 29.0 P.S.F. SPECIFIED ROOF LIVE LOAD

ALLOWABLE DEFL.(LL)= L/360 (0.95")
CALCULATED VERT. DEFL.(LL) = L/ 999 (0.11")
ALLOWABLE DEFL.(TL)= L/360 (0.95")
CALCULATED VERT. DEFL.(TL) = L/ 999 (0.18")

CSI: TC=0.83 (C-E:1) , BC=0.50 (J-L:2) , WB=0.76 (F-I:1) , SSI=0.37 (B-C:1)

DOL LUMBER=1.00 NAIL=1.00 LS BEND=1.10 COMP=1.10 SHEAR=1.10 TENS= 1.10

COMPANION LIVE LOAD FACTOR = 0.50

TRUSS PLATE MANUFACTURER IS NOT RESPONSIBLE FOR QUALITY CONTROL IN THE TRUSS MANUFACTURING PLANT .

NAIL VALUES

PLATE	GRIP(DRY) (PSI) MAX	MIN	SHEAR (PLI) MAX	MIN	SECTION (PLI) MAX	MIN
MT20	618	354	1667	822	2284	1656

PLATE PLACEMENT TOL. = 0.250 Inches

PLATE ROTATION TOL. = 5.0 Deg.

JSI GRIP= 0.89 (E) (INPUT = 0.90)
JSI METAL= 0.51 (F) (INPUT = 1.00)

REGISTERED PROFESSIONAL ENGINEER
06/01/2016
EDWIN C. FOK
PROVINCE OF ONTARIO

A-1601153

JOB NAME	TRUSS NAME	QUANTITY	PLY	JOB DESC.	DRWG NO.
263307	H23S	1	1	TRUSS DESC.	

Alpa Roof Truss, Maple

Version 7.640 S Oct 7 2015 MiTek Industries, Inc. Wed Jan 06 14:22:43 2016 Page 1

ID:o0wwtrWZe_90BmC?YOgW1cynpYC-PdQcfvbPiN9EWlzv262FW1JrKPcBGWMkwEchc?zy3Tw

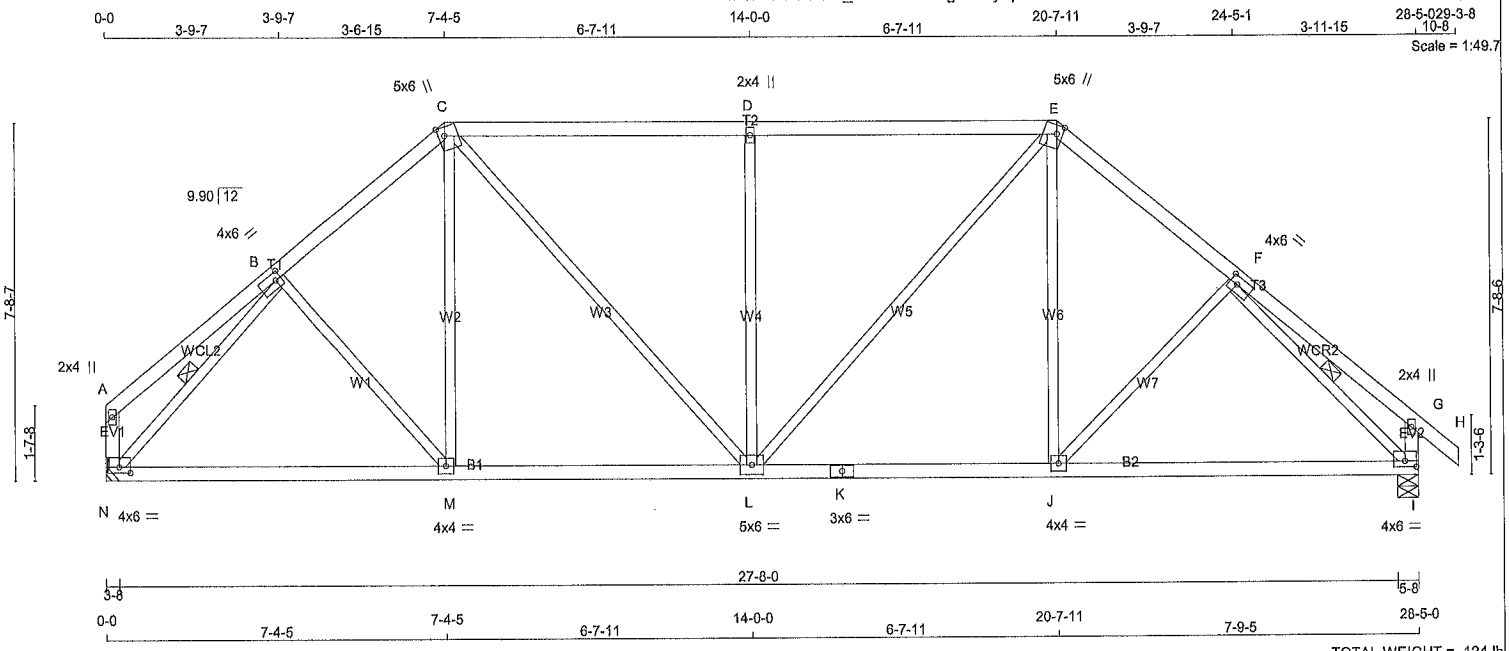

TOTAL WEIGHT = 124 lb

[M][F]

LUMBER

N. L. G. A. RULES

CHORDS	SIZE		LUMBER	DESCR.
A - C	2x4	DRY	No.2	SPF
C - E	2x4	DRY	No.2	SPF
E - H	2x4	DRY	No.2	SPF
N - A	2x4	DRY	No.2	SPF
I - G	2x4	DRY	No.2	SPF
N - K	2x4	DRY	No.2	SPF
K - I	2x4	DRY	No.2	SPF
ALL WEBS EXCEPT	2x3	DRY	No.2	SPF

DRY: SEASONED LUMBER.

PLATES (table is in inches)

JT	TYPE	PLATES	W	LEN	Y	X
A	TMV+p	MT20	2.0	4.0		
B	TMWW-t	MT20	4.0	6.0	2.00	1.50
C	TTWW+m	MT20	5.0	6.0	2.25	1.50
D	TMW+w	MT20	2.0	4.0		
E	TTWW+m	MT20	5.0	6.0	2.25	1.50
F	TMWW-t	MT20	4.0	6.0	2.00	2.00
G	TMV+p	MT20	2.0	4.0		
I	BMVW1-t	MT20	4.0	6.0	1.50	3.00
J	BMWW-t	MT20	4.0	4.0		
K	BS-t	MT20	3.0	6.0		
L	BMWWW-t	MT20	5.0	6.0		
M	BMWW-t	MT20	4.0	4.0		
N	BMVW1-t	MT20	4.0	6.0	1.50	3.00

NOTES- (1)

1) Lateral brace(s) shown shall be 1x4 for Part 9 design as per OBC 9.23.13.11, and no less than 2x4 for Part 4 design.

REGISTERED PROFESSIONAL ENGINEER
06/01/2016
EDWIN C. FOK
PROVINCE OF ONTARIO

DIMENSIONS, SUPPORTS AND LOADINGS SPECIFIED BY FABRICATOR TO BE VERIFIED BY BUILDING DESIGNER

BEARINGS

JT	FACTORED GROSS REACTION VERT	HORZ	MAXIMUM FACTORED GROSS REACTION DOWN	HORZ	UPLIFT	INPUT BRG	REQRD BRG
N	1742	0	1742	0	0	IN-SX	IN-SX
						HANGER BY OTHERS	
						MIN. SEAT SIZE: 1-14	
I	1833	0	1833	0	0	5-8	2-0

UNFACTORED REACTIONS

JT	1ST LCASE COMBINED	MAX./MIN. COMPONENT REACTIONS SNOW	LIVE	PERM.LIVE	WIND	DEAD	SOIL
N	1407	825 / 0	298 / 0	0 / 0	0 / 0	284 / 0	0 / 0
I	1469	881 / 0	298 / 0	0 / 0	0 / 0	290 / 0	0 / 0

BEARING MATERIAL TO BE SPF NO.2 OR BETTER AT JOINT(S) I

BRACING

TOP CHORD TO BE SHEATHED OR MAX. PURLIN SPACING = 4.31 FT.
MAX. UNBRACED BOTTOM CHORD LENGTH = 10.00 FT. OR RIGID CEILING DIRECTLY APPLIED.

ALL PITCH BREAKS AND PERIMETER CORNER JOINTS MUST BE LATERALLY RESTRAINED.

1 LATERAL BRACE(S) AT 1/ 2 LENGTH OF B-N, F-I.

END VERTICAL(S) MUST BE SHEATHED OR HAVE BRACES AS INDICATED IN THE MAX. UNBRACED LENGTH COLUMN OF THE TABLE BELOW

LOADING

TOTAL LOAD CASES: (4)

CHORDS

MEMB. FR-TO	MAX. FACTORED FORCE (LBS)	FACTORED VERT. LOAD (PLF) FROM	TO	LC1 CSI (LC)	MAX. UNBRAC LENGTH
A- B	0 / 24	-94.6	-94.6	0.19 (1)	10.00
B- C	-1721 / 0	-94.6	-94.6	0.19 (1)	4.92
C- D	-1746 / 0	-94.6	-94.6	0.59 (1)	4.31
D- E	-1746 / 0	-94.6	-94.6	0.59 (1)	4.31
E- F	-1782 / 0	-94.6	-94.6	0.21 (1)	4.83
F- G	0 / 26	-94.6	-94.6	0.22 (1)	10.00
G- H	0 / 29	-94.6	-94.6	0.06 (1)	10.00
N- A	-135 / 0	0.0	0.0	0.01 (1)	7.81
I- G	-234 / 0	0.0	0.0	0.02 (1)	7.81
N- M	0 / 1292	-28.0	-28.0	0.51 (2)	10.00
M- L	0 / 1308	-28.0	-28.0	0.52 (2)	10.00
L- K	0 / 1356	-28.0	-28.0	0.56 (2)	10.00
K- J	0 / 1356	-28.0	-28.0	0.56 (2)	10.00
J- I	0 / 1410	-28.0	-28.0	0.55 (2)	10.00

WEBS

MEMB. FR-TO	MAX. FACTORED FORCE (LBS)	MAX CSI (LC)
B- M	0 / 124	0.03 (3)
M- C	0 / 323	0.07 (2)
C- L	0 / 656	0.15 (1)
L- D	-769 / 0	0.84 (1)
L- E	0 / 585	0.13 (1)
J- E	0 / 387	0.09 (2)
J- F	-85 / 86	0.06 (1)
N- B	-1997 / 0	0.47 (1)
F- I	-2066 / 0	0.49 (1)

DESIGN CRITERIA

SPECIFIED LOADS:

TOP CH.	LL	=	29.0	PSF
	DL	=	3.0	PSF
BOT CH.	LL	=	10.5	PSF
	DL	=	7.0	PSF
TOTAL LOAD		=	49.5	PSF

SPACING = 24.0 IN. C/C

LOADING IN FLAT SECTION BASED ON A SLOPE OF 2.00/12 MINIMUM

THIS TRUSS IS DESIGNED FOR RESIDENTIAL OR SMALL BUILDING REQUIREMENTS OF PART 9, NBCC 2010

THIS DESIGN COMPLIES WITH:
- PART 9 OF OBC 2012 , BCBC 2012 , ABC 2014
- CSA 086-09
- TPIC 2011

(55 % OF 37.6 P.S.F. G.S.L. PLUS 8.4 P.S.F. RAIN LOAD) EQUALS 29.0 P.S.F. SPECIFIED ROOF LIVE LOAD

ALLOWABLE DEFL.(LL)= L/360 (0.95")
CALCULATED VERT. DEFL.(LL) = L/ 999 (0.16")
ALLOWABLE DEFL.(TL)= L/360 (0.95")
CALCULATED VERT. DEFL.(TL) = L/ 999 (0.26")

CSI: TC=0.59 (D-E:1) , BC=0.56 (J-L:2) , WB=0.84 (D-L:1) , SSI=0.30 (D-E:1)

DOL LUMBER=1.00 NAIL=1.00 LS BEND=1.10 COMP=1.10 SHEAR=1.10 TENS= 1.10

COMPANION LIVE LOAD FACTOR = 0.50

TRUSS PLATE MANUFACTURER IS NOT RESPONSIBLE FOR QUALITY CONTROL IN THE TRUSS MANUFACTURING PLANT .

NAIL VALUES

PLATE	GRIP(DRY) (PSI) MAX	MIN	SHEAR (PLI) MAX	MIN	SECTION (PLI) MAX	MIN
MT20	618	354	1667	822	2284	1656

PLATE PLACEMENT TOL. = 0.250 inches

PLATE ROTATION TOL. = 5.0 Deg.

JSI GRIP= 0.87 (F) (INPUT = 0.90)
JSI METAL= 0.51 (F) (INPUT = 1.00)

A-1601154

JOB NAME	TRUSS NAME	QUANTITY	PLY	JOB DESC.	DRWG NO.
263307	H24S	1	1	TRUSS DESC.	

Alpa Roof Truss, Maple

Version 7.640 S Oct 7 2015 MiTek Industries, Inc. Wed Jan 06 14:23:09 2016 Page 1

ID:o0wwtrWZe_90BmC?YOgW1cynpYC-fd?R6owiaMRYdlyvZZWLZWOMMuSIMLfZvHv3XVzy3TW

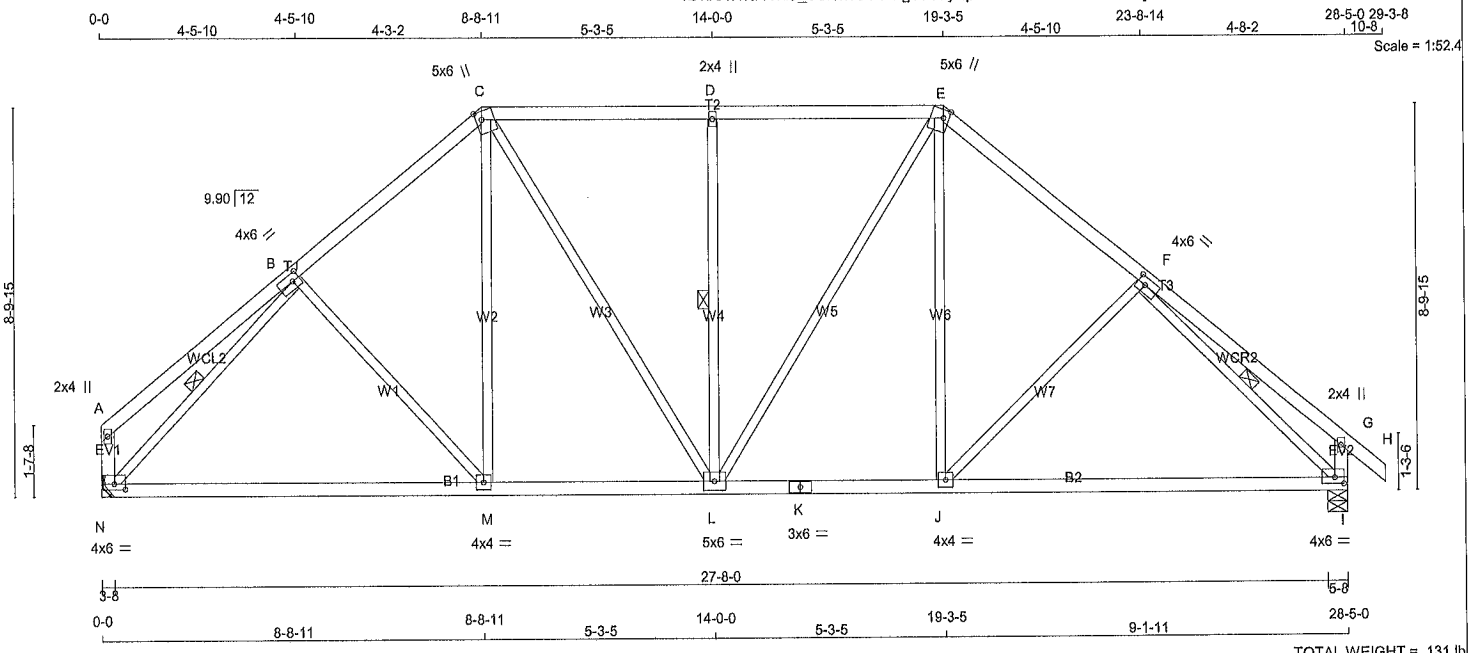

TOTAL WEIGHT = 131 lb

[M][F]

LUMBER

N. L. G. A. RULES

CHORDS	SIZE		LUMBER	DESCR.
A - C	2x4	DRY	No.2	SPF
C - E	2x4	DRY	No.2	SPF
E - H	2x4	DRY	No.2	SPF
N - A	2x4	DRY	No.2	SPF
I - G	2x4	DRY	No.2	SPF
N - K	2x4	DRY	No.2	SPF
K - I	2x4	DRY	No.2	SPF
ALL WEBS EXCEPT	2x3	DRY	No.2	SPF

DRY: SEASONED LUMBER.

PLATES (table is in inches)

JT	TYPE	PLATES	W	LEN	Y	X
A	TMV+p	MT20	2.0	4.0		
B	TMWW-t	MT20	4.0	6.0	2.00	2.00
C	TTWW+m	MT20	5.0	6.0	2.25	1.50
D	TMW+w	MT20	2.0	4.0		
E	TTWW+m	MT20	5.0	6.0	2.25	1.50
F	TMWW-t	MT20	4.0	6.0	2.00	2.26
G	TMV+p	MT20	2.0	4.0		
I	BMVW1-t	MT20	4.0	6.0	1.75	2.50
J	BMWW-t	MT20	4.0	4.0		
K	BS-t	MT20	3.0	6.0		
L	BMWWW-t	MT20	5.0	6.0		
M	BMWW-t	MT20	4.0	4.0		
N	BMVW1-t	MT20	4.0	6.0	1.50	3.00

NOTES- (1)

1) Lateral brace(s) shown shall be 1x4 for Part 9 design as per OBC 9.23.13.11, and no less than 2x4 for Part 4 design.

DIMENSIONS, SUPPORTS AND LOADINGS SPECIFIED BY FABRICATOR TO BE VERIFIED BY BUILDING DESIGNER

BEARINGS

JT	FACTORED GROSS REACTION VERT	HORZ	MAXIMUM FACTORED GROSS REACTION DOWN	HORZ	UPLIFT	INPUT BRG	REQRD BRG
N	1742	0	1742	0	0	IN-SX	IN-SX
						HANGER BY OTHERS	
						MIN. SEAT SIZE: 1-14	
I	1833	0	1833	0	0	5-8	2-0

UNFACTORED REACTIONS

JT	1ST LCASE COMBINED	MAX./MIN. COMPONENT REACTIONS SNOW	LIVE	PERM.LIVE	WIND	DEAD	SOIL
N	1407	825 / 0	298 / 0	0 / 0	0 / 0	284 / 0	0 / 0
I	1469	881 / 0	298 / 0	0 / 0	0 / 0	290 / 0	0 / 0

BEARING MATERIAL TO BE SPF NO.2 OR BETTER AT JOINT(S) I

BRACING

TOP CHORD TO BE SHEATHED OR MAX. PURLIN SPACING = 4.82 FT.
MAX. UNBRACED BOTTOM CHORD LENGTH = 10.00 FT. OR RIGID CEILING DIRECTLY APPLIED.

ALL PITCH BREAKS AND PERIMETER CORNER JOINTS MUST BE LATERALLY RESTRAINED.

1 LATERAL BRACE(S) AT 1/ 2 LENGTH OF D-L, B-N, F-I.

END VERTICAL(S) MUST BE SHEATHED OR HAVE BRACES AS INDICATED IN THE MAX. UNBRACED LENGTH COLUMN OF THE TABLE BELOW

LOADING

TOTAL LOAD CASES: (4)

CHORDS

MEMB. FR-TO	MAX. FACTORED FORCE (LBS)	FACTORED VERT. LOAD (PLF) FROM	TO	LC1 CSI (LC)	MAX. UNBRAC LENGTH
A- B	0 / 30	-94.6	-94.6	0.28 (1)	10.00
B- C	-1665 / 0	-94.6	-94.6	0.26 (1)	4.90
C- D	-1484 / 0	-94.6	-94.6	0.36 (1)	4.97
D- E	-1484 / 0	-94.6	-94.6	0.36 (1)	4.97
E- F	-1709 / 0	-94.6	-94.6	0.29 (1)	4.82
F- G	0 / 32	-94.6	-94.6	0.31 (1)	10.00
G- H	0 / 29	-94.6	-94.6	0.06 (1)	10.00
N- A	-168 / 0	0.0	0.0	0.02 (1)	7.81
I- G	-257 / 0	0.0	0.0	0.03 (1)	7.81
N- M	0 / 1321	-28.0	-28.0	0.63 (2)	10.00
M- L	0 / 1262	-28.0	-28.0	0.63 (2)	10.00
L- K	0 / 1296	-28.0	-28.0	0.68 (2)	10.00
K- J	0 / 1296	-28.0	-28.0	0.68 (2)	10.00
J- I	0 / 1423	-28.0	-28.0	0.68 (2)	10.00

WEBS

MEMB. FR-TO	MAX. FACTORED FORCE (LBS)	MAX CSI (LC)
B- M	-92 / 95	0.07 (1)
M- C	0 / 423	0.10 (2)
C- L	0 / 422	0.10 (1)
L- D	-606 / 0	0.30 (1)
L- E	0 / 358	0.08 (1)
J- E	0 / 482	0.11 (2)
J- F	-187 / 62	0.15 (1)
N- B	-1986 / 0	0.57 (1)
F- I	-2046 / 0	0.59 (1)

DESIGN CRITERIA

SPECIFIED LOADS:

TOP CH.	LL	=	29.0	PSF
	DL	=	3.0	PSF
BOT CH.	LL	=	10.5	PSF
	DL	=	7.0	PSF
TOTAL LOAD		=	49.5	PSF

SPACING = 24.0 IN. C/C

LOADING IN FLAT SECTION BASED ON A SLOPE OF 2.00/12 MINIMUM

THIS TRUSS IS DESIGNED FOR RESIDENTIAL OR SMALL BUILDING REQUIREMENTS OF PART 9, NBCC 2010

THIS DESIGN COMPLIES WITH:
- PART 9 OF OBC 2012 , BCBC 2012 , ABC 2014
- CSA 086-09
- TPIC 2011

(55 % OF 37.6 P.S.F. G.S.L. PLUS 8.4 P.S.F. RAIN LOAD) EQUALS 29.0 P.S.F. SPECIFIED ROOF LIVE LOAD

ALLOWABLE DEFL.(LL)= L/360 (0.95")
CALCULATED VERT. DEFL.(LL) = L/ 999 (0.29")
ALLOWABLE DEFL.(TL)= L/360 (0.95")
CALCULATED VERT. DEFL.(TL) = L/ 721 (0.47")

CSI: TC=0.36 (C-D:1) , BC=0.68 (I-J:2) , WB=0.59 (F-I:1) , SSI=0.24 (C-D:1)

DOL LUMBER=1.00 NAIL=1.00 LS BEND=1.10 COMP=1.10 SHEAR=1.10 TENS= 1.10

COMPANION LIVE LOAD FACTOR = 0.50

TRUSS PLATE MANUFACTURER IS NOT RESPONSIBLE FOR QUALITY CONTROL IN THE TRUSS MANUFACTURING PLANT .

NAIL VALUES

PLATE	GRIP(DRY) (PSI) MAX	MIN	SHEAR (PLI) MAX	MIN	SECTION (PLI) MAX	MIN
MT20	618	354	1667	822	2284	1656

PLATE PLACEMENT TOL. = 0.250 Inches

PLATE ROTATION TOL. = 5.0 Deg.

JSI GRIP= 0.90 (B) (INPUT = 0.90)
JSI METAL= 0.50 (F) (INPUT = 1.00)

REGISTERED PROFESSIONAL ENGINEER
06/01/2016
EDWIN C. FOK
PROVINCE OF ONTARIO

A-1601155

JOB NAME	TRUSS NAME	QUANTITY	PLY	JOB DESC.	DRWG NO.
263307	H25S	1	1	TRUSS DESC.	

Alpa Roof Truss, Maple

Version 7.640 S Oct 7 2015 MiTek Industries, Inc. Wed Jan 06 14:23:28 2016 Page 1

ID:o0wwtrWZe_90BmC?YOgW1cynpYC-bHed5H8d5CqsPdvZA2MorWgblY?bJ_qMGk0Zluzy3TD

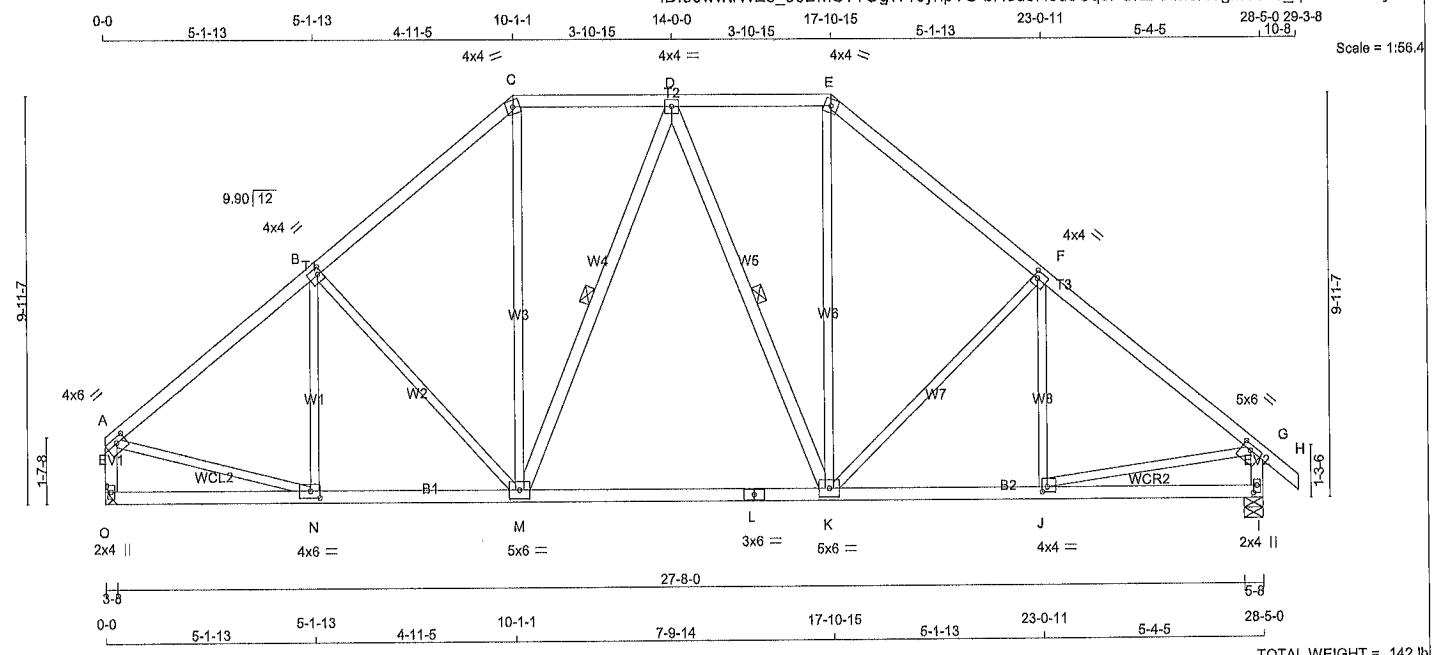

TOTAL WEIGHT = 142 lb

[M][F]

LUMBER

N. L. G. A. RULES

CHORDS	SIZE		LUMBER	DESCR.
A - C	2x4	DRY	No.2	SPF
C - E	2x4	DRY	No.2	SPF
E - H	2x4	DRY	No.2	SPF
O - A	2x4	DRY	No.2	SPF
I - G	2x4	DRY	No.2	SPF
O - L	2x4	DRY	No.2	SPF
L - I	2x4	DRY	No.2	SPF
ALL WEBS	2x3	DRY	No.2	SPF
EXCEPT				
M - D	2x4	DRY	No.2	SPF
D - K	2x4	DRY	No.2	SPF

DRY: SEASONED LUMBER.

PLATES (table is in inches)

JT	TYPE	PLATES	W	LEN	Y	X
A	TMVW-t	MT20	4.0	6.0	1.50	2.75
B	TMWW-t	MT20	4.0	4.0	2.00	1.25
C	TTW-m	MT20	4.0	4.0		
D	TMWW-t	MT20	4.0	4.0		
E	TTW-m	MT20	4.0	4.0		
F	TMWW-t	MT20	4.0	4.0	2.00	1.25
G	TMVW-t	MT20	5.0	6.0	1.50	2.75
I	BMV1+p	MT20	2.0	4.0	2.25	1.00
J	BMWW-t	MT20	4.0	4.0	1.50	1.50
K	BMWWW-t	MT20	5.0	6.0		
L	BS-t	MT20	3.0	6.0		
M	BMWWW-t	MT20	5.0	6.0		
N	BMWW-t	MT20	4.0	6.0	2.00	2.75
O	BMV1+p	MT20	2.0	4.0		

NOTES- (1)

1) Lateral brace(s) shown shall be 1x4 for Part 9 design as per OBC 9.23.13.11, and no less than 2x4 for Part 4 design.

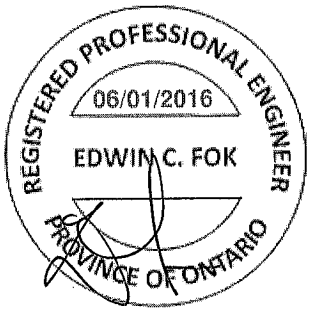

DIMENSIONS, SUPPORTS AND LOADINGS SPECIFIED BY FABRICATOR TO BE VERIFIED BY BUILDING DESIGNER

BEARINGS

JT	FACTORED GROSS REACTION VERT	HORZ	MAXIMUM FACTORED GROSS REACTION DOWN	HORZ	UPLIFT	INPUT BRG IN-SX	REQRD BRG IN-SX
O	1772	0	1772	0	0	HANGER BY OTHERS MIN. SEAT SIZE: 2-4	
I	1862	0	1862	0	0	5-8	2-9

UNFACTORED REACTIONS

JT	1ST LCASE COMBINED	MAX./MIN. COMPONENT REACTIONS SNOW	LIVE	PERM.LIVE	WIND	DEAD	SOIL
O	1431	825 / 0	298 / 0	0 / 0	0 / 0	308 / 0	0 / 0
I	1493	881 / 0	298 / 0	0 / 0	0 / 0	313 / 0	0 / 0

BEARING MATERIAL TO BE SPF NO.2 OR BETTER AT JOINT(S) I

BRACING

TOP CHORD TO BE SHEATHED OR MAX. PURLIN SPACING = 4.46 FT.
MAX. UNBRACED BOTTOM CHORD LENGTH = 10.00 FT. OR RIGID CEILING DIRECTLY APPLIED.

ALL PITCH BREAKS AND PERIMETER CORNER JOINTS MUST BE LATERALLY RESTRAINED.

1 LATERAL BRACE(S) AT 1/ 2 LENGTH OF D-M, D-K.

END VERTICAL(S) MUST BE SHEATHED OR HAVE BRACES AS INDICATED IN THE MAX. UNBRACED LENGTH COLUMN OF THE TABLE BELOW

LOADING

TOTAL LOAD CASES: (4)

CHORDS

MEMB. FR-TO	MAX. FACTORED FORCE (LBS)	FACTORED VERT. LOAD (PLF) FROM	TO	LC1	MAX CSI (LC)	MAX. UNBRAC LENGTH
A- B	-1798 / 0	-94.6	-94.6	0.37 (1)	4.63	
B- C	-1616 / 0	-94.6	-94.6	0.35 (1)	4.85	
C- D	-1222 / 0	-102.1	-102.1	0.20 (1)	5.58	
D- E	-1243 / 0	-102.1	-102.1	0.20 (1)	5.54	
E- F	-1644 / 0	-94.6	-94.6	0.38 (1)	4.77	
F- G	-1918 / 0	-94.6	-94.6	0.41 (1)	4.46	
G- H	0 / 29	-94.6	-94.6	0.06 (1)	10.00	
O- A	-1709 / 0	0.0	0.0	0.18 (1)	6.36	
I- G	-1798 / 0	0.0	0.0	0.18 (1)	6.23	
O- N	0 / 0	-28.0	-28.0	0.16 (2)	10.00	
N- M	0 / 1414	-28.0	-28.0	0.42 (2)	10.00	
M- L	0 / 1327	-28.0	-28.0	0.41 (2)	10.00	
L- K	0 / 1327	-28.0	-28.0	0.41 (2)	10.00	
K- J	0 / 1508	-28.0	-28.0	0.44 (2)	10.00	
J- I	0 / 0	-28.0	-28.0	0.17 (2)	10.00	

WEBS

MEMB. FR-TO	MAX. FACTORED FORCE (LBS)	MAX CSI (LC)
N- B	-214 / 86	0.11 (1)
M- C	-295 / 0	0.33 (1)
M- D	0 / 671	0.15 (1)
D- K	-284 / 0	0.16 (1)
K- E	-227 / 0	0.13 (1)
K- F	0 / 680	0.15 (1)
J- F	-389 / 0	0.44 (1)
A- N	-119 / 142	0.06 (1)
J- G	0 / 1458	0.33 (1)
	0 / 1531	0.34 (1)

DESIGN CRITERIA

SPECIFIED LOADS:

TOP CH.	LL	=	29.0	PSF
	DL	=	3.0	PSF
BOT CH.	LL	=	10.5	PSF
	DL	=	7.0	PSF
TOTAL LOAD		=	49.5	PSF

SPACING = 24.0 IN. C/C

LOADING IN FLAT SECTION BASED ON PIGGYBACK TRUSS WITH SLOPES OF 6.00/12 AND -6.00/12 AND RESPECTIVE WALL HEIGHTS OF 0-0 AND 0-0 AND AN ADDITIONAL DEAD LOAD OF 3.0 P.S.F.

THIS TRUSS IS DESIGNED FOR RESIDENTIAL OR SMALL BUILDING REQUIREMENTS OF PART 9, NBCC 2010

THIS DESIGN COMPLIES WITH:
- PART 9 OF OBC 2012 , BCBC 2012 , ABC 2014
- CSA 086-09
- TPIC 2011

(55 % OF 37.6 P.S.F. G.S.L. PLUS 8.4 P.S.F. RAIN LOAD) EQUALS 29.0 P.S.F. SPECIFIED ROOF LIVE LOAD

ALLOWABLE DEFL.(LL)= L/360 (0.95")
CALCULATED VERT. DEFL.(LL) = L/ 999 (0.12")
ALLOWABLE DEFL.(TL)= L/360 (0.95")
CALCULATED VERT. DEFL.(TL) = L/ 999 (0.20")

CSI: TC=0.41 (F-G:1) , BC=0.44 (J-K:2) , WB=0.44 (F-K:1) , SSI=0.19 (D-E:1)

DOL LUMBER=1.00 NAIL=1.00 LS BEND=1.10 COMP=1.10 SHEAR=1.10 TENS= 1.10

COMPANION LIVE LOAD FACTOR = 0.50

TRUSS PLATE MANUFACTURER IS NOT RESPONSIBLE FOR QUALITY CONTROL IN THE TRUSS MANUFACTURING PLANT .

NAIL VALUES

PLATE	GRIP(DRY) (PSI) MAX	MIN	SHEAR (PLI) MAX	MIN	SECTION (PLI) MAX	MIN
MT20	618	354	1667	822	2284	1656

PLATE PLACEMENT TOL. = 0.250 Inches

PLATE ROTATION TOL. = 5.0 Deg.

JSI GRIP= 0.89 (O) (INPUT = 0.90)
JSI METAL= 0.56 (J) (INPUT = 1.00)

A-1601156

JOB NAME	TRUSS NAME	QUANTITY	PLY	JOB DESC.	DRWG NO.
263307	H25T	1	1	TRUSS DESC.	

Alpa Roof Truss, Maple

Version 7.640 S Oct 7 2015 MiTek Industries, Inc. Wed Jan 06 14:23:58 2016 Page 1

ID:o0wwtrWZe_90BmC?YOgW1cynpYC-j3SyOYVR1Qcb0ECKxMuq3rwkkeDcLSKmAPH9I9zy3SI

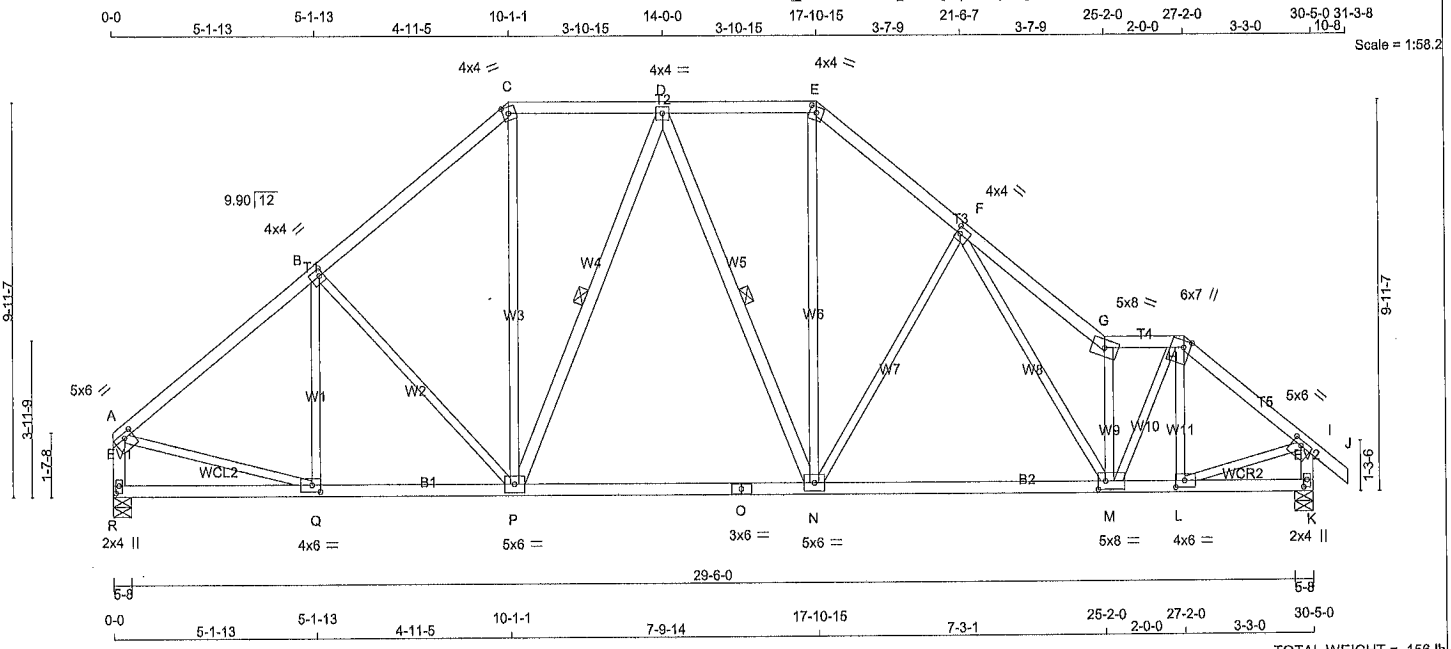

TOTAL WEIGHT = 156 lb

[M][F]

LUMBER

N. L. G. A. RULES

CHORDS	SIZE		LUMBER	DESCR.
A - C	2x4	DRY	No.2	SPF
C - E	2x4	DRY	No.2	SPF
E - G	2x4	DRY	No.2	SPF
G - H	2x4	DRY	No.2	SPF
H - J	2x4	DRY	No.2	SPF
R - A	2x4	DRY	No.2	SPF
K - I	2x4	DRY	No.2	SPF
R - O	2x4	DRY	No.2	SPF
O - K	2x4	DRY	No.2	SPF
ALL WEBS	2x3	DRY	No.2	SPF
EXCEPT				
P - D	2x4	DRY	No.2	SPF
D - N	2x4	DRY	No.2	SPF

DRY: SEASONED LUMBER.

PLATES (table is in inches)

JT	TYPE	PLATES	W	LEN	Y	X
A	TMVW-t	MT20	5.0	6.0	1.50	2.75
B	TMWW-t	MT20	4.0	4.0	2.00	1.25
C	TTW-m	MT20	4.0	4.0	2.00	1.75
D	TMWW-t	MT20	4.0	4.0		
E	TTW-m	MT20	4.0	4.0	1.75	2.00
F	TMWW-t	MT20	4.0	4.0	2.00	1.25
G	TTW-m	MT20	5.0	8.0		
H	TTWW+m	MT20	6.0	7.0	2.00	2.00
I	TMVW-t	MT20	5.0	6.0	1.50	2.75
K	BMV1+p	MT20	2.0	4.0	2.25	1.00
L	BMWW-t	MT20	4.0	6.0	2.00	2.75
M	BMWWW-t	MT20	5.0	8.0	2.50	2.25
N	BMWWW-t	MT20	5.0	6.0		
O	BS-t	MT20	3.0	6.0		
P	BMWWW-t	MT20	5.0	6.0		
Q	BMWW-t	MT20	4.0	6.0	2.00	2.50
R	BMV1+p	MT20	2.0	4.0	2.25	1.00

NOTES- (1)

1) Lateral brace(s) shown shall be 1x4 for Part 9 design as per OBC 9.23.13.11, and no less than 2x4 for Part 4 design.

DIMENSIONS, SUPPORTS AND LOADINGS SPECIFIED BY FABRICATOR TO BE VERIFIED BY BUILDING DESIGNER

BEARINGS

JT	FACTORED GROSS REACTION VERT	HORZ	MAXIMUM FACTORED GROSS REACTION DOWN	HORZ	UPLIFT	INPUT BRG IN-SX	REQRD BRG IN-SX
R	1864	0	1864	0	0	5-8	2-9
K	1956	0	1956	0	0	5-8	2-14

UNFACTORED REACTIONS

JT	1ST LCASE COMBINED	MAX./MIN. COMPONENT REACTIONS SNOW	LIVE	PERM.LIVE	WIND	DEAD	SOIL
R	1507	883 / 0	319 / 0	0 / 0	0 / 0	304 / 0	0 / 0
K	1569	939 / 0	319 / 0	0 / 0	0 / 0	310 / 0	0 / 0

BEARING MATERIAL TO BE SPF NO.2 OR BETTER AT JOINT(S) R, K

BRACING

TOP CHORD TO BE SHEATHED OR MAX. PURLIN SPACING = 3.90 FT.
MAX. UNBRACED BOTTOM CHORD LENGTH = 10.00 FT. OR RIGID CEILING DIRECTLY APPLIED.

ALL PITCH BREAKS AND PERIMETER CORNER JOINTS MUST BE LATERALLY RESTRAINED.

1 LATERAL BRACE(S) AT 1/ 2 LENGTH OF D-P, D-N.

END VERTICAL(S) MUST BE SHEATHED OR HAVE BRACES AS INDICATED IN THE MAX. UNBRACED LENGTH COLUMN OF THE TABLE BELOW

LOADING

TOTAL LOAD CASES: (4)

CHORDS

MEMB. FR-TO	MAX. FACTORED FORCE (LBS)	FACTORED VERT. LOAD LC1 (PLF) FROM	TO	MAX CSI (LC)	MAX. UNBRAC LENGTH
A- B	-1910 / 0	-94.6	-94.6	0.38 (1)	4.51
B- C	-1740 / 0	-94.6	-94.6	0.36 (1)	4.70
C- D	-1319 / 0	-94.6	-94.6	0.19 (1)	5.44
D- E	-1443 / 0	-94.6	-94.6	0.19 (1)	5.26
E- F	-1891 / 0	-94.6	-94.6	0.21 (1)	4.71
F- G	-2883 / 0	-94.6	-94.6	0.27 (1)	3.90
G- H	-2192 / 0	-94.6	-94.6	0.10 (1)	4.54
H- I	-1950 / 0	-94.6	-94.6	0.17 (1)	4.69
I- J	0 / 29	-94.6	-94.6	0.06 (1)	10.00
R- A	-1803 / 0	0.0	0.0	0.19 (1)	6.23
K- I	-1916 / 0	0.0	0.0	0.20 (1)	6.07
R- Q	0 / 0	-28.0	-28.0	0.15 (2)	10.00
Q- P	0 / 1501	-28.0	-28.0	0.40 (2)	10.00
P- O	0 / 1467	-28.0	-28.0	0.53 (2)	10.00
O- N	0 / 1467	-28.0	-28.0	0.53 (2)	10.00
N- M	0 / 1779	-28.0	-28.0	0.56 (2)	10.00
M- L	0 / 1489	-28.0	-28.0	0.35 (2)	10.00
L- K	0 / 0	-28.0	-28.0	0.08 (3)	10.00

WEBS

MEMB. FR-TO	MAX. FACTORED FORCE (LBS)	MAX CSI (LC)
Q- B	-232 / 86	0.12 (1)
B- P	-282 / 0	0.31 (1)
P- C	0 / 760	0.17 (1)
P- D	-403 / 0	0.23 (1)
D- N	-65 / 74	0.04 (1)
N- E	0 / 910	0.20 (1)
N- F	-704 / 0	0.82 (1)
F- M	0 / 962	0.22 (1)
M- G	-2068 / 0	0.60 (1)
M- H	0 / 1525	0.34 (1)
L- H	-355 / 0	0.09 (1)
A- Q	0 / 1547	0.35 (1)
L- I	0 / 1558	0.35 (1)

DESIGN CRITERIA

SPECIFIED LOADS:

TOP CH.	LL	=	29.0	PSF
	DL	=	3.0	PSF
BOT CH.	LL	=	10.5	PSF
	DL	=	7.0	PSF
TOTAL LOAD		=	49.5	PSF

SPACING = 24.0 IN. C/C

LOADING IN ALL FLAT SECTIONS BASED ON A SLOPE OF 2.00/12 MINIMUM

THIS TRUSS IS DESIGNED FOR RESIDENTIAL OR SMALL BUILDING REQUIREMENTS OF PART 9, NBCC 2010

THIS DESIGN COMPLIES WITH:
- PART 9 OF OBC 2012 , BCBC 2012 , ABC 2014
- CSA 086-09
- TPIC 2011

(55 % OF 37.6 P.S.F. G.S.L. PLUS 8.4 P.S.F. RAIN LOAD) EQUALS 29.0 P.S.F. SPECIFIED ROOF LIVE LOAD

ALLOWABLE DEFL.(LL)= L/360 (1.01")
CALCULATED VERT. DEFL.(LL) = L/ 999 (0.15")
ALLOWABLE DEFL.(TL)= L/360 (1.01")
CALCULATED VERT. DEFL.(TL) = L/ 999 (0.25")

CSI: TC=0.38 (A-B:1) , BC=0.56 (M-N:2) , WB=0.82 (F-N:1) , SSI=0.18 (A-B:1)

DOL LUMBER=1.00 NAIL=1.00 LS BEND=1.10 COMP=1.10 SHEAR=1.10 TENS= 1.10

COMPANION LIVE LOAD FACTOR = 0.50

TRUSS PLATE MANUFACTURER IS NOT RESPONSIBLE FOR QUALITY CONTROL IN THE TRUSS MANUFACTURING PLANT .

NAIL VALUES

PLATE	GRIP(DRY) (PSI) MAX	MIN	SHEAR (PLI) MAX	MIN	SECTION (PLI) MAX	MIN
MT20	618	364	1667	822	2284	1656

PLATE PLACEMENT TOL. = 0.250 Inches

PLATE ROTATION TOL. = 5.0 Deg.

JSI GRIP= 0.90 (G) (INPUT = 0.90)
JSI METAL= 0.63 (G) (INPUT = 1.00)

A-160115 7

JOB NAME	TRUSS NAME	QUANTITY	PLY	JOB DESC.	DRWG NO.
263307	H31S	6	1	TRUSS DESC.	

Alpa Roof Truss, Maple

Version 7.640 S Oct 7 2015 MiTek Industries, Inc. Wed Jan 06 14:24:35 2016 Page 1
ID:o0wwtrWZe_90BmC?YOgW1cynpYC-7ABy9CyfKnGLywXRbd3W2ey?nZtZWlvDhfkcYVzy3SA

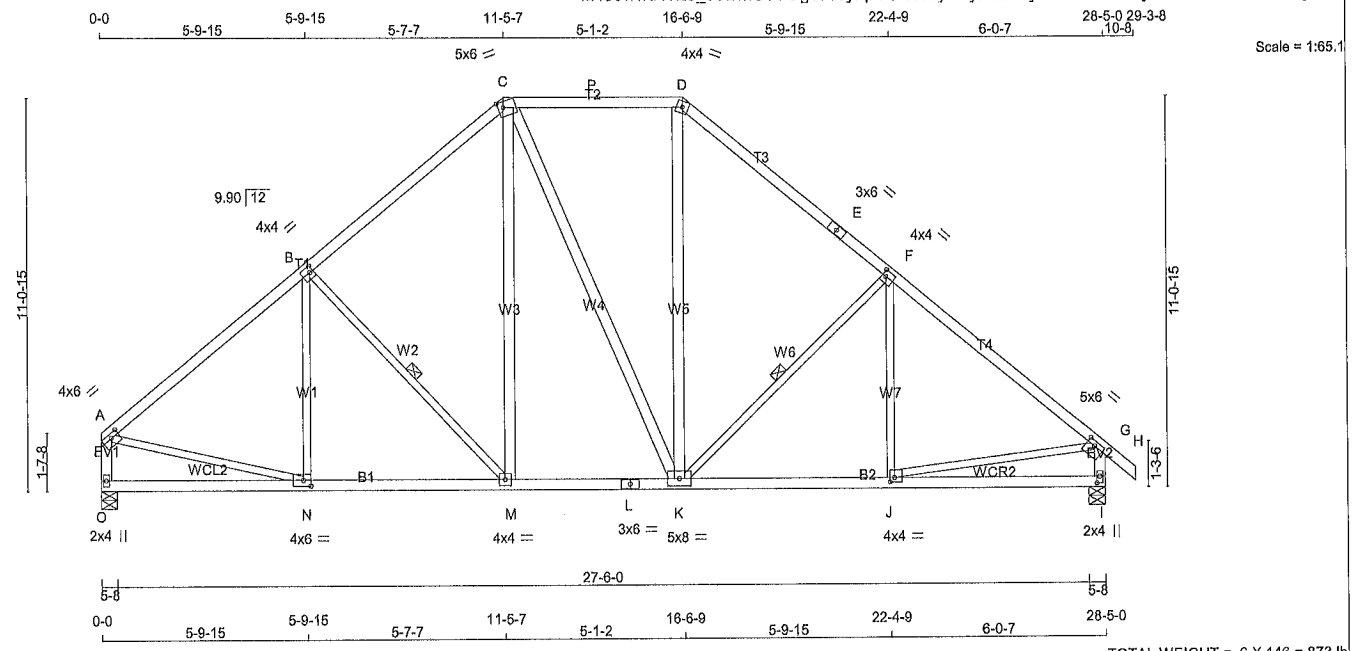

TOTAL WEIGHT = 6 X 146 = 873 lb

LUMBER
N. L. G. A. RULES

CHORDS	SIZE		LUMBER	DESCR.
A - C	2x4	DRY	No.2	SPF
C - D	2x4	DRY	No.2	SPF
D - E	2x4	DRY	No.2	SPF
E - H	2x4	DRY	No.2	SPF
O - A	2x4	DRY	No.2	SPF
I - G	2x4	DRY	No.2	SPF
O - L	2x4	DRY	No.2	SPF
L - I	2x4	DRY	No.2	SPF
ALL WEBS	2x3	DRY	No.2	SPF
EXCEPT				
M - C	2x4	DRY	No.2	SPF
C - K	2x4	DRY	No.2	SPF
K - D	2x4	DRY	No.2	SPF

DRY: SEASONED LUMBER.

PLATES (table is in inches)

JT	TYPE	PLATES	W	LEN	Y	X
A	TMWW-t	MT20	4.0	6.0	1.50	2.75
B	TMWW-t	MT20	4.0	4.0	2.00	1.25
C	TTWW-m	MT20	5.0	6.0	2.00	1.75
D	TTW-m	MT20	4.0	4.0		
E	TS-t	MT20	3.0	6.0		
F	TMWW-t	MT20	4.0	4.0	2.00	1.25
G	TMWW-t	MT20	5.0	6.0	1.50	2.75
I	BMV1+p	MT20	2.0	4.0	2.25	1.00
J	BMWW-t	MT20	4.0	4.0	1.50	1.50
K	BMWWW-t	MT20	5.0	8.0		
L	BS-t	MT20	3.0	6.0		
M	BMWW-t	MT20	4.0	4.0		
N	BMWW-t	MT20	4.0	6.0	2.00	2.50
O	BMV1+p	MT20	2.0	4.0		

NOTES- (1)
1) Lateral brace(s) shown shall be 1x4 for Part 9 design as per OBC 9.23.13.11, and no less than 2x4 for Part 4 design.

DIMENSIONS, SUPPORTS AND LOADINGS SPECIFIED BY FABRICATOR TO BE VERIFIED BY BUILDING DESIGNER

BEARINGS

JT	FACTORED GROSS REACTION VERT	HORZ	MAXIMUM FACTORED GROSS REACTION DOWN	HORZ	UPLIFT	INPUT BRG IN-SX	REQRD BRG IN-SX
O	1761	0	1761	0	0	5-8	2-4
I	1852	0	1852	0	0	5-8	2-8

UNFACTORED REACTIONS

JT	1ST LCASE COMBINED	MAX./MIN. COMPONENT REACTIONS SNOW	LIVE	PERM.LIVE	WIND	DEAD	SOIL
O	1423	825 / 0	298 / 0	0 / 0	0 / 0	300 / 0	0 / 0
I	1485	881 / 0	298 / 0	0 / 0	0 / 0	305 / 0	0 / 0

BEARING MATERIAL TO BE SPF NO.2 OR BETTER AT JOINT(S) O, I

BRACING
TOP CHORD TO BE SHEATHED OR MAX. PURLIN SPACING = 4.32 FT.
MAX. UNBRACED BOTTOM CHORD LENGTH = 10.00 FT. OR RIGID CEILING DIRECTLY APPLIED.

ALL PITCH BREAKS AND PERIMETER CORNER JOINTS MUST BE LATERALLY RESTRAINED.

1 LATERAL BRACE(S) AT 1/ 2 LENGTH OF B-M, F-K.

END VERTICAL(S) MUST BE SHEATHED OR HAVE BRACES AS INDICATED IN THE MAX. UNBRACED LENGTH COLUMN OF THE TABLE BELOW

LOADING
TOTAL LOAD CASES: (4)

CHORDS

MEMB. FR-TO	MAX. FACTORED FORCE (LBS)	FACTORED VERT. LOAD LC1 (PLF) FROM	TO	MAX CSI (LC)	MAX. UNBRAC LENGTH
A- B	-1797 / 0	-94.6	-94.6	0.49 (1)	4.48
B- C	-1507 / 0	-94.6	-94.6	0.45 (1)	4.85
C- P	-1146 / 0	-102.1	-102.1	0.47 (1)	5.30
P- D	-1146 / 0	-102.1	-102.1	0.47 (1)	5.30
D- E	-1524 / 0	-94.6	-94.6	0.49 (1)	4.76
E- F	-1524 / 0	-94.6	-94.6	0.49 (1)	4.76
F- G	-1902 / 0	-94.6	-94.6	0.55 (1)	4.32
G- H	0 / 29	-94.6	-94.6	0.06 (1)	10.00
O- A	-1695 / 0	0.0	0.0	0.18 (1)	6.38
I- G	-1783 / 0	0.0	0.0	0.18 (1)	6.26
O- N	0 / 0	-28.0	-28.0	0.24 (3)	10.00
N- M	0 / 1418	-28.0	-28.0	0.39 (2)	10.00
M- L	0 / 1133	-28.0	-28.0	0.28 (2)	10.00
L- K	0 / 1133	-28.0	-28.0	0.28 (2)	10.00
K- J	0 / 1601	-28.0	-28.0	0.42 (2)	10.00
J- I	0 / 0	-28.0	-28.0	0.25 (3)	10.00

WEBS

MEMB. FR-TO	MAX. FACTORED FORCE (LBS)	MAX CSI (LC)
N- B	-130 / 180	0.09 (1)
B- M	-423 / 0	0.20 (1)
M- C	0 / 451	0.07 (2)
C- K	0 / 31	0.00 (1)
K- D	0 / 478	0.08 (1)
K- F	-509 / 0	0.24 (1)
J- F	-47 / 228	0.05 (3)
A- N	0 / 1452	0.33 (1)
J- G	0 / 1519	0.34 (1)

[M][F]

DESIGN CRITERIA

SPECIFIED LOADS:

TOP CH.	LL	=	29.0	PSF
	DL	=	3.0	PSF
BOT CH.	LL	=	10.5	PSF
	DL	=	7.0	PSF
TOTAL LOAD		=	49.5	PSF

SPACING = 24.0 IN. C/C

LOADING IN FLAT SECTION BASED ON PIGGYBACK TRUSS WITH SLOPES OF 6.00/12 AND -6.00/12 AND RESPECTIVE WALL HEIGHTS OF 0-0 AND 0-0 AND AN ADDITIONAL DEAD LOAD OF 3.0 P.S.F.

THIS TRUSS IS DESIGNED FOR RESIDENTIAL OR SMALL BUILDING REQUIREMENTS OF PART 9, NBCC 2010

THIS DESIGN COMPLIES WITH:
- PART 9 OF OBC 2012 , BCBC 2012 , ABC 2014
- CSA 086-09
- TPIC 2011

(55 % OF 37.6 P.S.F. G.S.L. PLUS 8.4 P.S.F. RAIN LOAD) EQUALS 29.0 P.S.F. SPECIFIED ROOF LIVE LOAD

ALLOWABLE DEFL.(LL)= L/360 (0.95")
CALCULATED VERT. DEFL.(LL) = L/ 999 (0.07")
ALLOWABLE DEFL.(TL)= L/360 (0.95")
CALCULATED VERT. DEFL.(TL) = L/ 999 (0.11")

CSI: TC=0.55 (F-G:1) , BC=0.42 (J-K:2) , WB=0.34 (G-J:1) , SSI=0.21 (F-G:1)

DOL LUMBER=1.00 NAIL=1.00 LS BEND=1.10 COMP=1.10 SHEAR=1.10 TENS= 1.10

COMPANION LIVE LOAD FACTOR = 0.50

TRUSS PLATE MANUFACTURER IS NOT RESPONSIBLE FOR QUALITY CONTROL IN THE TRUSS MANUFACTURING PLANT .

NAIL VALUES

PLATE	GRIP(DRY) (PSI) MAX	MIN	SHEAR (PLI) MAX	MIN	SECTION (PLI) MAX	MIN
MT20	618	354	1667	822	2284	1656

PLATE PLACEMENT TOL. = 0.250 Inches

PLATE ROTATION TOL. = 5.0 Deg.

JSI GRIP= 0.89 (O) (INPUT = 0.90)
JSI METAL= 0.56 (J) (INPUT = 1.00)

A-160115-8

JOB NAME	TRUSS NAME	QUANTITY	PLY	JOB DESC.	DRWG NO.
263307	H31T	1	1	TRUSS DESC.	

Alpa Roof Truss, Maple

Version 7.640 S Oct 7 2015 MiTek Industries, Inc. Wed Jan 06 14:24:44 2016 Page 1
ID:o0wwtrWZe_90BmC?YOgW1cynpYC-NvEL2H3ICYP3XIjAd0jdwYqZ7Bvn7LeYIZQbNUzy3S1

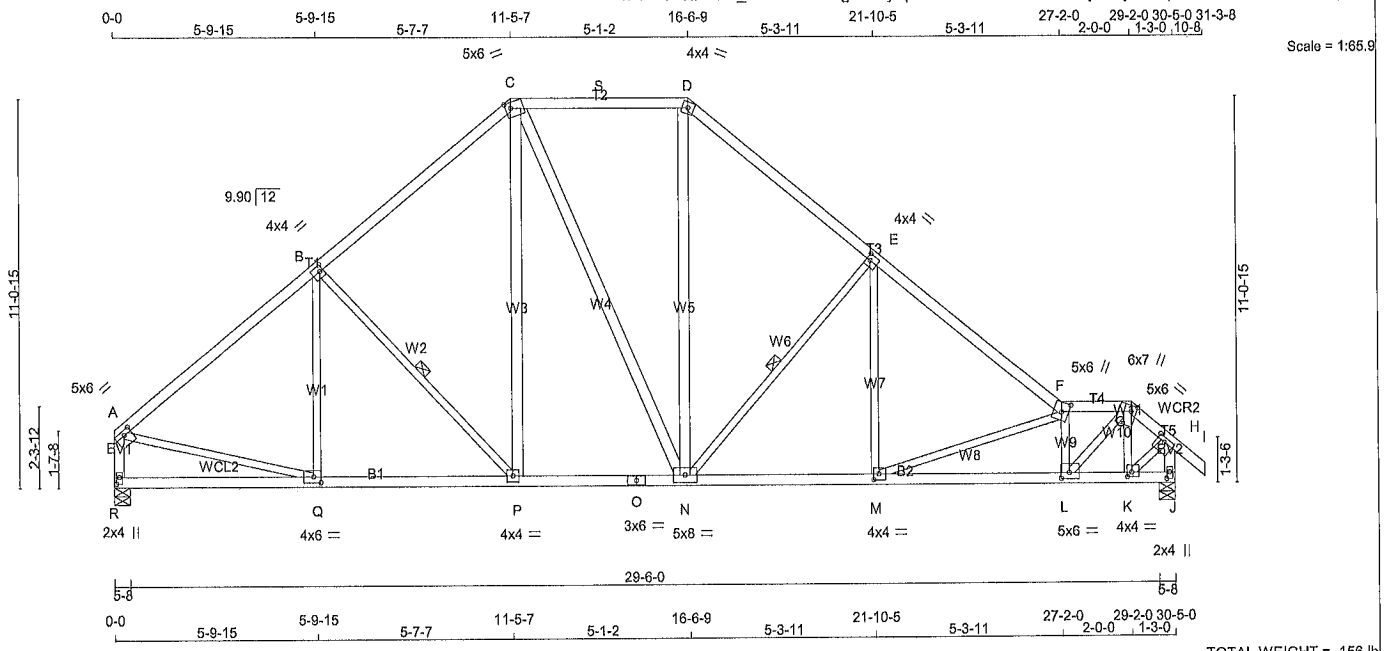

TOTAL WEIGHT = 156 lb
[M][F]

LUMBER
N. L. G. A. RULES

CHORDS	SIZE		LUMBER	DESCR.
A - C	2x4	DRY	No.2	SPF
C - D	2x4	DRY	No.2	SPF
D - F	2x4	DRY	No.2	SPF
F - G	2x4	DRY	No.2	SPF
G - I	2x4	DRY	No.2	SPF
R - A	2x4	DRY	No.2	SPF
J - H	2x4	DRY	No.2	SPF
R - O	2x4	DRY	No.2	SPF
O - J	2x4	DRY	No.2	SPF
ALL WEBS	2x3	DRY	No.2	SPF
EXCEPT				
P - C	2x4	DRY	No.2	SPF
C - N	2x4	DRY	No.2	SPF
N - D	2x4	DRY	No.2	SPF

DRY: SEASONED LUMBER.

PLATES (table is in inches)

JT	TYPE	PLATES	W	LEN	Y	X
A	TMVW-t	MT20	5.0	6.0	1.50	2.75
B	TMWW-t	MT20	4.0	4.0	2.00	1.25
C	TTWW-m	MT20	5.0	6.0	2.00	1.75
D	TTW-m	MT20	4.0	4.0		
E	TMWW-t	MT20	4.0	4.0	2.00	1.25
F	TTWW+m	MT20	5.0	6.0	3.25	2.25
G	TTWW+m	MT20	6.0	7.0	2.00	1.75
H	TMVW-t	MT20	5.0	6.0	1.50	2.75
J	BMV1+p	MT20	2.0	4.0	2.25	1.00
K	BMWW-t	MT20	4.0	4.0	1.50	1.50
L	BMWW-t	MT20	5.0	6.0	2.00	2.75
M	BMWW-t	MT20	4.0	4.0	2.00	1.75
N	BMWWW-t	MT20	5.0	8.0		
O	BS-t	MT20	3.0	6.0		
P	BMWW-t	MT20	4.0	4.0		
Q	BMWW-t	MT20	4.0	6.0	2.00	2.50
R	BMV1+p	MT20	2.0	4.0	2.25	1.00

NOTES- (1)
1) Lateral brace(s) shown shall be 1x4 for Part 9 design as per OBC 9.23.13.11, and no less than 2x4 for Part 4 design.

REGISTERED PROFESSIONAL ENGINEER
06/01/2016
EDWIN C. FOK
PROVINCE OF ONTARIO

DIMENSIONS, SUPPORTS AND LOADINGS SPECIFIED BY FABRICATOR TO BE VERIFIED BY BUILDING DESIGNER

BEARINGS

JT	FACTORED GROSS REACTION VERT	HORZ	MAXIMUM FACTORED GROSS REACTION DOWN	HORZ	UPLIFT	INPUT BRG IN-SX	REQRD BRG IN-SX
R	1884	0	1884	0	0	5-8	2-10
J	1975	0	1975	0	0	5-8	2-15

UNFACTORED REACTIONS

JT	1ST LCASE COMBINED	MAX./MIN. COMPONENT REACTIONS SNOW	LIVE	PERM.LIVE	WIND	DEAD	SOIL
R	1522	882 / 0	319 / 0	0 / 0	0 / 0	321 / 0	0 / 0
J	1584	940 / 0	319 / 0	0 / 0	0 / 0	324 / 0	0 / 0

BEARING MATERIAL TO BE SPF NO.2 OR BETTER AT JOINT(S) R, J

BRACING
TOP CHORD TO BE SHEATHED OR MAX. PURLIN SPACING = 4.03 FT.
MAX. UNBRACED BOTTOM CHORD LENGTH = 10.00 FT. OR RIGID CEILING DIRECTLY APPLIED.

ALL PITCH BREAKS AND PERIMETER CORNER JOINTS MUST BE LATERALLY RESTRAINED.

1 LATERAL BRACE(S) AT 1/ 2 LENGTH OF B-P, E-N.

END VERTICAL(S) MUST BE SHEATHED OR HAVE BRACES AS INDICATED IN THE MAX. UNBRACED LENGTH COLUMN OF THE TABLE BELOW

LOADING
TOTAL LOAD CASES: (4)

CHORDS

MEMB. FR-TO	MAX. FACTORED FORCE (LBS)	FACTORED VERT. LOAD LC1 (PLF) FROM	TO	MAX CSI (LC)	MAX. UNBRAC LENGTH
A- B	-1948 / 0	-94.6	-94.6	0.51 (1)	4.33
B- C	-1676 / 0	-94.6	-94.6	0.46 (1)	4.63
C- S	-1332 / 0	-102.1	-102.1	0.48 (1)	4.99
S- D	-1332 / 0	-102.1	-102.1	0.48 (1)	4.99
D- E	-1758 / 0	-94.6	-94.6	0.41 (1)	4.63
E- F	-2399 / 0	-94.6	-94.6	0.46 (1)	4.03
F- G	-2625 / 0	-94.6	-94.6	0.12 (1)	4.19
G- H	-1541 / 0	-94.6	-94.6	0.07 (1)	5.26
H- I	0 / 29	-94.6	-94.6	0.06 (1)	10.00
R- A	-1817 / 0	0.0	0.0	0.19 (1)	6.21
J- H	-1978 / 0	0.0	0.0	0.20 (1)	6.00
R- Q	0 / 0	-28.0	-28.0	0.24 (3)	10.00
Q- P	0 / 1534	-28.0	-28.0	0.40 (2)	10.00
P- O	0 / 1264	-28.0	-28.0	0.29 (2)	10.00
O- N	0 / 1264	-28.0	-28.0	0.29 (2)	10.00
N- M	0 / 1884	-28.0	-28.0	0.40 (1)	10.00
M- L	0 / 2704	-28.0	-28.0	0.54 (1)	10.00
L- K	0 / 1124	-28.0	-28.0	0.22 (1)	10.00
K- J	0 / 0	-28.0	-28.0	0.04 (1)	10.00

WEBS

MEMB. FR-TO	MAX. FACTORED FORCE (LBS)	MAX CSI (LC)
Q- B	-157 / 168	0.11 (1)
B- P	-403 / 0	0.19 (1)
P- C	0 / 442	0.07 (2)
C- N	0 / 164	0.03 (1)
N- D	0 / 647	0.10 (1)
N- E	-861 / 0	0.41 (1)
M- E	0 / 515	0.12 (2)
M- F	-876 / 0	0.50 (1)
L- F	-1525 / 0	0.23 (1)
L- G	0 / 2183	0.49 (1)
K- G	-726 / 0	0.11 (1)
A- Q	0 / 1572	0.35 (1)
K- H	0 / 1418	0.32 (1)

DESIGN CRITERIA

SPECIFIED LOADS:

TOP CH.	LL	=	29.0	PSF
	DL	=	3.0	PSF
BOT CH.	LL	=	10.5	PSF
	DL	=	7.0	PSF
TOTAL LOAD		=	49.5	PSF

SPACING = 24.0 IN. C/C

LOADING IN HIGHEST FLAT SECTION BASED ON PIGGYBACK TRUSS WITH SLOPES OF 6.00/12 AND -6.00/12 AND RESPECTIVE WALL HEIGHTS OF 0-0 AND 0-0 AND AN ADDITIONAL DEAD LOAD OF 3.0 P.S.F.

LOADING IN OTHER FLAT SECTIONS BASED ON A SLOPE OF 6.00/12

THIS TRUSS IS DESIGNED FOR RESIDENTIAL OR SMALL BUILDING REQUIREMENTS OF PART 9, NBCC 2010

THIS DESIGN COMPLIES WITH:
- PART 9 OF OBC 2012 , BCBC 2012 , ABC 2014
- CSA 086-09
- TPIC 2011

DESIGN ASSUMPTIONS
-OVERHANG NOT TO BE ALTERED OR CUT OFF.

(55 % OF 37.6 P.S.F. G.S.L. PLUS 8.4 P.S.F. RAIN LOAD) EQUALS 29.0 P.S.F. SPECIFIED ROOF LIVE LOAD

ALLOWABLE DEFL.(LL)= L/360 (1.01")
CALCULATED VERT. DEFL.(LL) = L/ 999 (0.11")
ALLOWABLE DEFL.(TL)= L/360 (1.01")
CALCULATED VERT. DEFL.(TL) = L/ 999 (0.19")

CSI: TC=0.51 (A-B:1) , BC=0.54 (L-M:1) , WB=0.50 (F-M:1) , SSI=0.20 (A-B:1)

DOL LUMBER=1.00 NAIL=1.00 LS BEND=1.10 COMP=1.10 SHEAR=1.10 TENS= 1.10

COMPANION LIVE LOAD FACTOR = 0.50

TRUSS PLATE MANUFACTURER IS NOT RESPONSIBLE FOR QUALITY CONTROL IN THE TRUSS MANUFACTURING PLANT .

NAIL VALUES

PLATE	GRIP(DRY) (PSI) MAX	MIN	SHEAR (PLI) MAX	MIN	SECTION (PLI) MAX	MIN
MT20	618	354	1667	822	2284	1656

PLATE PLACEMENT TOL. = 0.250 Inches

PLATE ROTATION TOL. = 5.0 Deg.

JSI GRIP= 0.89 (H) (INPUT = 0.90)
JSI METAL= 0.53 (A) (INPUT = 1.00)

A-1601159

JOB NAME	TRUSS NAME	QUANTITY	PLY	JOB DESC.	DRWG NO.
248710	H36	5	1	TRUSS DESC.	

Alpa Roof Truss, Maple

Version 7.600 S Oct 3 2014 MiTek Industries, Inc. Mon Dec 08 10:46:49 2014 Page 1

ID:o0wwtrWZe_90BmC?YOgW1cynpYC-vLOLWQI04BZ_U8m_G5RR1e59skhMTGm9wC0hFgyB3UK

Scale = 1:41.4

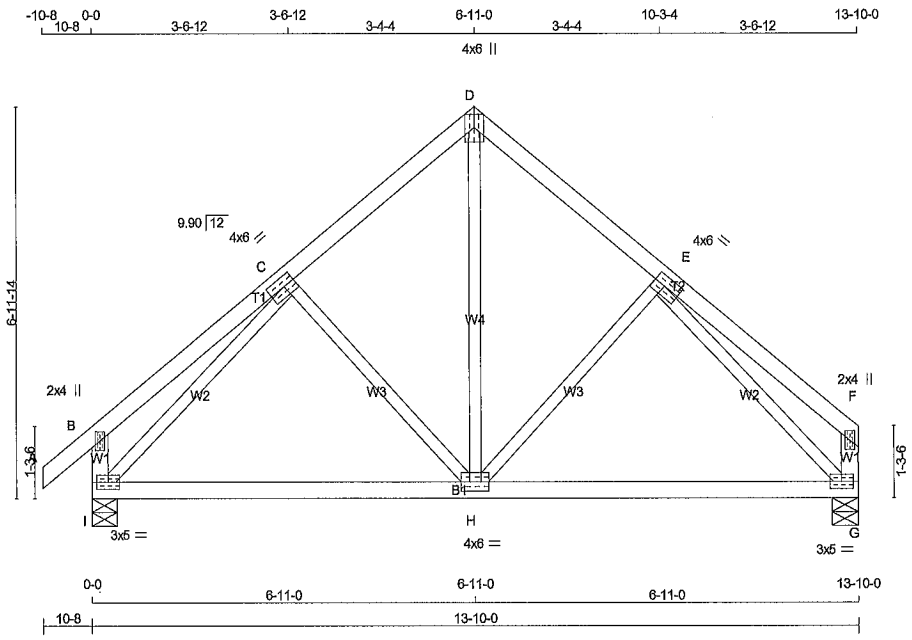

TOTAL WEIGHT = 5 X 61 = 304 lb

[M][F]

LUMBER

N. L. G. A. RULES

CHORDS	SIZE		LUMBER	DESCR.
A - D	2x4	DRY	No.2	SPF
D - F	2x4	DRY	No.2	SPF
I - B	2x4	DRY	No.2	SPF
G - F	2x4	DRY	No.2	SPF
I - G	2x4	DRY	No.2	SPF
ALL WEBS	2x3	DRY	No.2	SPF

EXCEPT

SEASONED LUMBER.

PLATES (table is in inches)

JT	TYPE	PLATES	W	LEN	Y	X
B	TMV+p	MT20	2.0	4.0		
C	TMWW-t	MT20	4.0	6.0	2.00	2.50
D	TTW+p	MT20	4.0	6.0	Edge	
E	TMWW-t	MT20	4.0	6.0	2.00	2.50
F	TMV+p	MT20	2.0	4.0		
G	BMVW1-t	MT20	3.0	5.0		
H	BMWWW-t	MT20	4.0	6.0		
I	BMVW1-t	MT20	3.0	5.0		

Edge - INDICATES REFERENCE CORNER OF PLATE TOUCHES EDGE OF CHORD.

DIMENSIONS, SUPPORTS AND LOADINGS SPECIFIED BY FABRICATOR TO BE VERIFIED BY BUILDING DESIGNER

BEARINGS

JT	FACTORED GROSS REACTION VERT	HORZ	MAXIMUM FACTORED GROSS REACTION DOWN	HORZ	UPLIFT	INPUT BRG IN-SX	REQRD BRG IN-SX
I	939	0	939	0	0	5-8	1-8
G	848	0	848	0	0	5-8	1-8

UNFACTORED REACTIONS

JT	1ST LCASE COMBINED	MAX./MIN. COMPONENT REACTIONS SNOW	LIVE	PERM.LIVE	WIND	DEAD	SOIL
I	747	458 / 0	145 / 0	0 / 0	0 / 0	144 / 0	0 / 0
G	685	402 / 0	145 / 0	0 / 0	0 / 0	138 / 0	0 / 0

BEARING MATERIAL TO BE SPF NO.2 OR BETTER AT JOINT(S) I, G

BRACING

TOP CHORD TO BE SHEATHED OR MAX. PURLIN SPACING = 6.25FT.
MAX. UNBRACED BOTTOM CHORD LENGTH = 10.00FT. OR RIGID CEILING DIRECTLY APPLIED.

LOADING

TOTAL LOAD CASES: (4)

CHORDS

MEMB. FR-TO	MAX. FACTORED FORCE (LBS)	FACTORED VERT. LOAD LC1 (PLF) FROM	TO	MAX CSI (LC)	MAX UNBRAC LENGTH
A- B	0 / 29	-94.6	-94.6	0.06 (1)	10.00
B- C	0 / 24	-94.6	-94.6	0.18 (1)	10.00
C- D	-625 / 0	-94.6	-94.6	0.14 (1)	6.25
D- E	-625 / 0	-94.6	-94.6	0.14 (1)	6.25
E- F	0 / 24	-94.6	-94.6	0.18 (1)	10.00
I- B	-217 / 0	0.0	0.0	0.02 (1)	7.81
G- F	-125 / 0	0.0	0.0	0.01 (1)	7.81
I- H	0 / 589	-28.0	-28.0	0.45 (2)	10.00
H- G	0 / 589	-28.0	-28.0	0.45 (2)	10.00

WEBS

MEMB. FR-TO	MAX. FACTORED FORCE (LBS)	MAX CSI (LC)
H- D	0 / 510	0.11 (1)
H- E	-184 / 26	0.08 (1)
C- H	-184 / 26	0.08 (1)
I- C	-876 / 0	0.37 (1)
E- G	-876 / 0	0.37 (1)

LICENSED PROFESSIONAL ENGINEER
D. O'CONNOR
100009580
DEC 08 2014
PROVINCE OF ONTARIO

DESIGN CRITERIA

SPECIFIED LOADS:

TOP CH.	LL	=	29.0	PSF
	DL	=	3.0	PSF
BOT CH.	LL	=	10.5	PSF
	DL	=	7.0	PSF
TOTAL LOAD		=	49.5	PSF

SPACING = 24.0 IN. C/C

THIS TRUSS IS DESIGNED FOR RESIDENTIAL OR SMALL BUILDING REQUIREMENTS OF PART 9, NBCC 2010

THIS DESIGN COMPLIES WITH:
- PART 9 OF OBC 2012 , BCBC 2012
- CSA 086-09
- TPIC 2011

(55 % OF 37.6 P.S.F. G.S.L. PLUS 8.4 P.S.F. RAIN LOAD EQUALS 29.0 P.S.F. SPECIFIED ROOF LIVE LOAD

ALLOWABLE DEFL.(LL)= L/360 (0.46")
CALCULATED VERT. DEFL.(LL) = L/ 999 (0.07")
ALLOWABLE DEFL.(TL)= L/360 (0.46")
CALCULATED VERT. DEFL.(TL) = L/ 999 (0.11")

CSI: TC=0.18 (B-C:1) , BC=0.45 (H-I:2) , WB=0.37 (C-I:1) , SSI=0.16 (H-I:3)

DOL LUMBER=1.00 NAIL=1.00 LS BEND=1.10 COMP=1.10 SHEAR=1.10 TENS= 1.10

COMPANION LIVE LOAD FACTOR = 0.50

TRUSS PLATE MANUFACTURER IS NOT RESPONSIBLE FOR QUALITY CONTROL IN THE TRUSS MANUFACTURING PLANT .

NAIL VALUES

PLATE	GRIP(DRY) (PSI) MAX	MIN	SHEAR (PLI) MAX	MIN	SECTION (PLI) MAX	MIN
MT20	618	354	1667	822	2284	1656

PLATE PLACEMENT TOL. = 0.250 inches

PLATE ROTATION TOL. = 5.0 Deg.

JSI GRIP= 0.89 (I) (INPUT = 0.90)
JSI METAL= 0.21 (E) (INPUT = 1.00)

A.14121875

JOB NAME	TRUSS NAME	QUANTITY	PLY	JOB DESC.	DRWG NO.
244676	H20	1	1	TRUSS DESC.	

Alpa Roof Truss, Maple

Version 7.500 S Oct 23 2013 MiTek Industries, Inc. Tue Aug 26 11:36:21 2014 Page 1

ID:o0wwtrWZe_90BmC?YOgW1cynpYC-3mDuLyfH2WYLlsC4HZPShntFZvV9mRtNgClW2qyk?a8

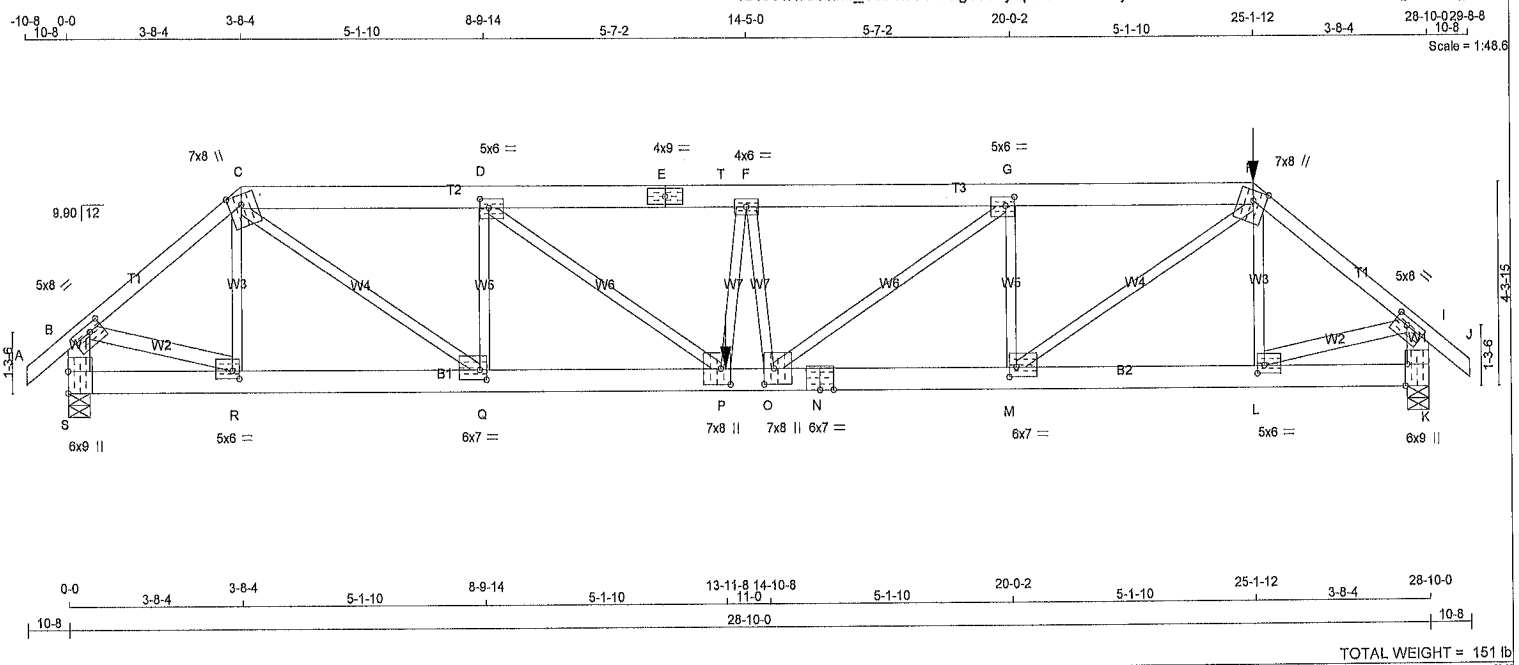

TOTAL WEIGHT = 151 lb

[M]

LUMBER

N. L. G. A. RULES

CHORDS	SIZE		LUMBER	DESCR.
A - C	2x4	DRY	No.2	SPF
C - E	2x6	DRY	No.2	SPF
E - H	2x6	DRY	No.2	SPF
H - J	2x4	DRY	No.2	SPF
S - B	2x6	DRY	No.2	SPF
K - I	2x6	DRY	No.2	SPF
S - N	2x6	DRY	1650F 1.5E	SPF
N - K	2x6	DRY	1650F 1.5E	SPF
WEBS	2x3	DRY	No.2	SPF
BEPT				
D - R	2x4	DRY	No.2	SPF
L - I	2x4	DRY	No.2	SPF

DRY: SEASONED LUMBER.

PLATES (table is in inches)

JT	TYPE	PLATES	W	LEN	Y	X
B	TMVW-t	MT20	5.0	8.0	1.75	3.25
C	TTWW+m	MT20	7.0	8.0	2.50	3.25
D	TMWW-t	MT20	5.0	6.0	2.25	2.25
E	TS-t	MT20	4.0	9.0		
F	TMWW-t	MT20	4.0	6.0		
G	TMWW-t	MT20	5.0	6.0	2.25	2.25
H	TTWW+m	MT20	7.0	8.0	2.50	3.25
I	TMVW-t	MT20	5.0	8.0	1.75	3.25
K	BMV1+t	MT20	6.0	9.0	Edge	0.50
L	BMWW-t	MT20	5.0	6.0	2.00	1.75
M	BMWW-t	MT20	6.0	7.0	2.50	1.75
N	BS-t	MT20	6.0	7.0		
O	BMWW+t	MT20	7.0	8.0	4.00	2.50
P	BMWW+t	MT20	7.0	8.0	4.00	2.50
Q	BMWW-t	MT20	6.0	7.0	2.50	1.75
R	BMWW-t	MT20	5.0	6.0	2.00	1.75
S	BMV1+t	MT20	6.0	9.0	5.50	

Edge - INDICATES REFERENCE CORNER OF PLATE TOUCHES EDGE OF CHORD.

HANGERS NOTES

1) SPECIAL HANGER(S) OR CONNECTION(S) REQUIRED TO SUPPORT CONCENTRATED LOAD(S) 254.3 lbs FACTORED DOWN AT 25-1-12 ON TOP CHORD, AND 1425.6 lbs FACTORED DOWN AT 13-11-8 ON BOTTOM CHORD. DESIGN FOR UNSPECIFIED CONNECTION(S) IS DELEGATED TO THE BUILDING DESIGNER.

DIMENSIONS, SUPPORTS AND LOADINGS SPECIFIED BY FABRICATOR TO BE VERIFIED BY BUILDING DESIGNER

BEARINGS

JT	FACTORED GROSS REACTION VERT	HORZ	MAXIMUM FACTORED GROSS REACTION DOWN	HORZ	UPLIFT	INPUT BRG IN-SX	REQRD BRG IN-SX
S	3062	0	3062	0	0	5-8	4-7
K	3765	0	3765	0	0	5-8	5-8

UNFACTORED REACTIONS

JT	1ST LCASE COMBINED	MAX./MIN. COMPONENT REACTIONS SNOW	LIVE	WIND	DEAD
S	2461	1465 / 0	507 / 0	0 / 0	490 / 0
K	3043	1782 / 0	646 / 0	0 / 0	615 / 0

BEARING MATERIAL TO BE SPF NO.2 OR BETTER AT JOINT(S) S, K

BRACING

TOP CHORD TO BE SHEATHED OR MAX. PURLIN SPACING = 2.51FT.
MAX. UNBRACED BOTTOM CHORD LENGTH = 10.00FT. OR RIGID CEILING DIRECTLY APPLIED.

LOADING

TOTAL LOAD CASES: (3)

CHORDS

MEMB. FR-TO	MAX. FACTORED FORCE (LBS)	FACTORED VERT. LOAD LC1 (PLF) FROM	TO	MAX CSI (LC)	MAX UNBRAC LENGTH
A- B	0 / 29	-94.6	-94.6	0.07 (1)	10.00
B- C	-3373 / 0	-94.6	-94.6	0.46 (1)	3.39
C- D	-5598 / 0	-94.6	-94.6	0.39 (1)	3.41
D- E	-7586 / 0	-94.6	-94.6	0.57 (1)	2.80
E- T	-7586 / 0	-94.6	-94.6	0.57 (1)	2.80
T- F	-7586 / 0	-186.2	-186.2	0.57 (1)	2.80
F- G	-7561 / 0	-186.2	-186.2	0.77 (1)	2.51
G- H	-6348 / 0	-186.2	-186.2	0.63 (1)	2.91
H- I	-4187 / 0	-94.6	-94.6	0.57 (1)	2.95
I- J	0 / 29	-94.6	-94.6	0.07 (1)	10.00
S- B	-3034 / 0	0.0	0.0	0.22 (1)	6.00
K- I	-3702 / 0	0.0	0.0	0.26 (1)	5.51
S- R	0 / 0	-28.0	-28.0	0.05 (2)	10.00
R- Q	0 / 2621	-28.0	-28.0	0.25 (1)	10.00
Q- P	0 / 5598	-28.0	-28.0	0.57 (1)	10.00
P- O	0 / 7619	-55.1	-55.1	0.73 (1)	10.00
O- N	0 / 6347	-55.1	-55.1	0.61 (1)	10.00
N- M	0 / 6347	-55.1	-55.1	0.61 (1)	10.00
M- L	0 / 3262	-55.1	-55.1	0.33 (1)	10.00
L- K	0 / 0	-55.1	-55.1	0.10 (2)	10.00

WEBS

MEMB. FR-TO	MAX. FACTORED FORCE (LBS)	MAX CSI (LC)
R- C	-477 / 0	0.13 (1)
C- Q	0 / 3733	0.92 (1)
Q- D	-2069 / 0	0.53 (1)
D- P	0 / 2493	0.62 (1)
P- F	-229 / 0	0.06 (1)
F- O	-564 / 0	0.15 (1)
O- G	0 / 1522	0.38 (1)
M- G	-2069 / 0	0.54 (1)
M- H	0 / 3883	0.96 (1)
L- H	-482 / 13	0.13 (1)
B- R	0 / 2684	0.47 (1)
L- I	0 / 3332	0.59 (1)

FACTORED CONCENTRATED LOADS (LBS)

JT	LOC.	LC1	MAX-	MAX+	FACE	DIR	TYPE
H	25-1-12	-254	-254	---	FRONT	VERT	[illegible]
P	13-11-8	-1426	-1426	---	FRONT	VERT	TOTAL

LICENSED PROFESSIONAL ENGINEER
D. O'CONNOR
100009580
AUG 26 2014
PROVINCE OF ONTARIO

DESIGN CRITERIA

*** SPECIAL LOADS ANALYSIS ***
GEOMETRY AND/OR BASIC LOADS CHANGED BY USER.
LOADS WERE DERIVED FROM USER INPUT
NO FURTHER MODIFICATIONS WERE MADE

SPECIFIED LOADS:

TOP CH.	LL	=	29.0	PSF
	DL	=	3.0	PSF
BOT CH.	LL	=	10.5	PSF
	DL	=	7.0	PSF
TOTAL LOAD		=	49.5	PSF

SPACING = 24.0 IN. C/C

LOADING IN FLAT SECTION BASED ON A SLOPE OF 2.00/12 MINIMUM

GIRDER TYPE: CPrimeHip
SIDE SETBACK = 3-8-4
END SETBACK = 5-10-8
END WALL WIDTH = 0-0
CORNER FRAMING TYPE: CONVENTIONAL
END JACK TYPE: CONVENTIONAL
APPLIED TO FRONT SIDE
- ADDT'L LOADS BASED ON 55 % OF GSL.
LOADS APPLIED TO FIRST 14-10-8 OF SPAN MEASURED FROM THE RIGHT.

*** NON STANDARD GIRDER ***
ADDT'L USER-DEFINED LOADS APPLIED TO ALL LOAD CASES.

THIS TRUSS IS DESIGNED FOR RESIDENTIAL OR SMALL BUILDING REQUIREMENTS OF PART 9, NBCC 2010

THIS DESIGN COMPLIES WITH:
- PART 9 OF OBC 2012 , BCBC 2012 , ABC 2012
- CSA 086-09
- TPIC 2011

(55 % OF 37.6 P.S.F. G.S.L. PLUS 8.4 P.S.F. RAIN LOAD EQUALS 29.0 P.S.F. SPECIFIED ROOF LIVE LOAD

ALLOWABLE DEFL.(LL)= L/360 (0.96")
CALCULATED VERT. DEFL.(LL) = L/ 999 (0.31")
ALLOWABLE DEFL.(TL)= L/360 (0.96")
CALCULATED VERT. DEFL.(TL) = L/ 711 (0.49")

CSI: TC=0.77 (F-G:1) , BC=0.73 (O-P:1) , WB=0.96 (H-M:1) , SSI=0.38 (G-H:1)

DOL LUMBER=1.00 NAIL=1.00 LS BEND=1.00 COMP=1.00 SHEAR=1.00 TENS= 1.00

COMPANION LIVE LOAD FACTOR = 0.50

AUTOSOLVE HEELS OFF

TRUSS PLATE MANUFACTURER IS NOT RESPONSIBLE FOR QUALITY CONTROL IN THE TRUSS MANUFACTURING PLANT .

A.14083618

CONTINUED ON PAGE 2

NAIL VALUES

PLATE	GRIP(DRY) (PSI)		SHEAR (PLI)		SECTION (PLI)	
	MAX	MIN	MAX	MIN	MAX	MIN
MT20	618	354	1667	822	2284	1666

PLATE PLACEMENT TOL. = 0.250 inches

PLATE ROTATION TOL. = 5.0 Deg.

JSI GRIP= 0.90 (H) (INPUT = 0.90)
JSI METAL= 0.85 (N) (INPUT = 1.00)

LICENSED PROFESSIONAL ENGINEER
D. O'CONNOR
100009580
AUG 26/2014
PROVINCE OF ONTARIO

A.H083618(1)

JOB NAME	TRUSS NAME	QUANTITY	PLY	JOB DESC.	DRWG NO.
244676	H26	1	1	TRUSS DESC.	

Alpa Roof Truss, Maple

Version 7.500 S Oct 23 2013 MiTek Industries, Inc. Tue Aug 26 11:36:29 2014 Page 1

ID:o0wwtrWZe_90BmC?YOgW1cynpYC-qJiv0hlIAzZCl5pclFYK0TCeN8DCe7VYWRexKNyk?a0

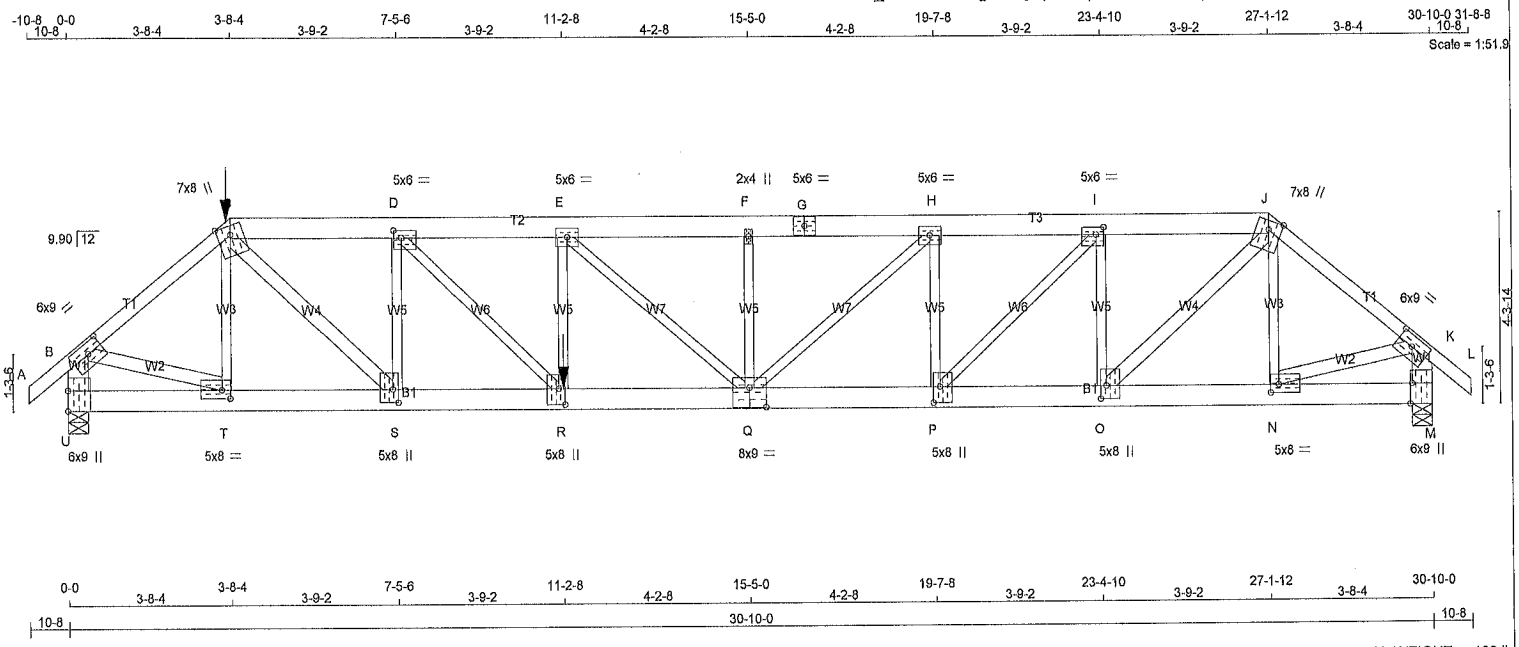

TOTAL WEIGHT = 169 lb

[M]

LUMBER

N. L. G. A. RULES

CHORDS	SIZE		LUMBER	DESCR.
A - C	2x4	DRY	No.2	SPF
C - G	2x6	DRY	No.2	SPF
G - J	2x6	DRY	No.2	SPF
J - L	2x4	DRY	No.2	SPF
U - B	2x6	DRY	No.2	SPF
M - K	2x6	DRY	No.2	SPF
U - Q	2x6	DRY	1650F 1.5E	SPF
Q - M	2x6	DRY	1650F 1.5E	SPF
WEBS EPT	2x3	DRY	No.2	SPF
C - S	2x4	DRY	No.2	SPF
O - J	2x4	DRY	No.2	SPF
B - T	2x4	DRY	No.2	SPF
N - K	2x4	DRY	No.2	SPF

DRY: SEASONED LUMBER.

PLATES (table is in inches)

JT	TYPE	PLATES	W	LEN	Y	X
B	TMVW-t	MT20	6.0	9.0	2.75	4.25
C	TTWW+m	MT20	7.0	8.0	Edge	
D	TMWW-t	MT20	5.0	6.0	2.00	2.00
E	TMWW-t	MT20	5.0	6.0		
F	TMW+w	MT20	2.0	4.0		
G	TS-t	MT20	5.0	6.0		
H	TMWW-t	MT20	5.0	6.0		
I	TMWW-t	MT20	5.0	6.0	2.00	2.00
J	TTWW+m	MT20	7.0	8.0	Edge	
K	TMVW-t	MT20	6.0	9.0	2.75	4.25
M	BMV1+t	MT20	6.0	9.0	Edge	0.50
N	BMWW-t	MT20	5.0	8.0	2.25	2.25
O	BMWW+t	MT20	5.0	8.0	3.50	1.50
P	BMWW+t	MT20	5.0	8.0	4.25	1.75
Q	BSWWW-l	MT20	8.0	9.0	5.25	4.50
R	BMWW+t	MT20	5.0	8.0	4.25	1.75
S	BMWW+t	MT20	5.0	8.0	3.50	1.50
T	BMWW-t	MT20	5.0	8.0	2.25	2.25
U	BMV1+t	MT20	6.0	9.0	5.50	

Edge - INDICATES REFERENCE CORNER OF PLATE TOUCHES EDGE OF CHORD.

HANGERS NOTES

1) SPECIAL HANGER(S) OR CONNECTION(S) REQUIRED TO SUPPORT CONCENTRATED LOAD(S) 254.3 lbs FACTORED DOWN AT 3-8-4 ON TOP CHORD, AND 1935.5 lbs FACTORED DOWN AT 11-2-8 ON BOTTOM CHORD. DESIGN FOR UNSPECIFIED CONNECTION(S) IS DELEGATED TO THE BUILDING DESIGNER.

DIMENSIONS, SUPPORTS AND LOADINGS SPECIFIED BY FABRICATOR TO BE VERIFIED BY BUILDING DESIGNER

BEARINGS

JT	FACTORED GROSS REACTION VERT	HORZ	MAXIMUM FACTORED GROSS REACTION DOWN	HORZ	UPLIFT	INPUT BRG IN-SX	REQRD BRG IN-SX
U	4209	0	4209	0	0	5-8	5-8
M	2937	0	2937	0	0	5-8	4-1

UNFACTORED REACTIONS

JT	1ST LCASE COMBINED	MAX./MIN. COMPONENT REACTIONS SNOW	LIVE	WIND	DEAD
U	3401	1993 / 0	721 / 0	0 / 0	687 / 0
M	2360	1405 / 0	486 / 0	0 / 0	469 / 0

BEARING MATERIAL TO BE SPF NO.2 OR BETTER AT JOINT(S) U, M

BRACING

TOP CHORD TO BE SHEATHED OR MAX. PURLIN SPACING = 2.56FT.
MAX. UNBRACED BOTTOM CHORD LENGTH = 10.00FT. OR RIGID CEILING DIRECTLY APPLIED.

LOADING

TOTAL LOAD CASES: (3)

CHORDS

MEMB. FR-TO	MAX. FACTORED FORCE (LBS)	FACTORED VERT. LOAD LC1 (PLF) FROM	TO	MAX CSI (LC)	MAX UNBRAC LENGTH
A- B	0 / 29	-94.6	-94.6	0.07 (1)	10.00
B- C	-4695 / 0	-94.6	-94.6	0.65 (1)	2.71
C- D	-6512 / 0	-186.2	-186.2	0.46 (1)	3.09
D- E	-8269 / 0	-186.2	-186.2	0.63 (1)	2.56
E- F	-7590 / 0	-94.6	-94.6	0.52 (1)	2.83
F- G	-7590 / 0	-94.6	-94.6	0.51 (1)	2.84
G- H	-7590 / 0	-94.6	-94.6	0.51 (1)	2.84
H- I	-6254 / 0	-94.6	-94.6	0.33 (1)	3.30
I- J	-4635 / 0	-94.6	-94.6	0.23 (1)	3.86
J- K	-3200 / 0	-94.6	-94.6	0.44 (1)	3.50
K- L	0 / 29	-94.6	-94.6	0.07 (1)	10.00
U- B	-4117 / 0	0.0	0.0	0.29 (1)	5.25
M- K	-2891 / 0	0.0	0.0	0.21 (1)	6.13
U- T	0 / 0	-55.1	-55.1	0.06 (2)	10.00
T- S	0 / 3650	-55.1	-55.1	0.34 (1)	10.00
S- R	0 / 8512	-55.1	-55.1	0.64 (1)	10.00
R- Q	0 / 8289	-28.0	-28.0	0.78 (1)	10.00
Q- P	0 / 6254	-28.0	-28.0	0.56 (1)	10.00
P- O	0 / 4635	-28.0	-28.0	0.42 (1)	10.00
O- N	0 / 2489	-28.0	-28.0	0.22 (1)	10.00
N- M	0 / 0	-28.0	-28.0	0.03 (2)	10.00

WEBS

MEMB. FR-TO	MAX. FACTORED FORCE (LBS)	MAX CSI (LC)
T- C	-676 / 0	0.18 (1)
C- S	0 / 4115	0.73 (1)
S- D	-2660 / 0	0.69 (1)
D- R	0 / 2549	0.63 (1)
R- E	0 / 269	0.07 (2)
E- Q	-950 / 0	0.51 (1)
Q- F	-418 / 0	0.11 (1)
Q- H	0 / 1813	0.45 (1)
P- H	-1583 / 0	0.41 (1)
P- I	0 / 2322	0.57 (1)
O- I	-2084 / 0	0.54 (1)
O- J	0 / 3087	0.55 (1)
N- J	-492 / 0	0.13 (1)
B- T	0 / 3735	0.66 (1)
N- K	0 / 2546	0.45 (1)

FACTORED CONCENTRATED LOADS (LBS)

JT	LOC.	LC1	MAX-	MAX+	FACE	DIR.
C	3-8-4	-254	-254	---	FRONT	VERT
R	11-2-8	-1936	-1936	---	FRONT	VERT

LICENSED PROFESSIONAL ENGINEER
D. O'CONNOR
TOTAL
100009580
AUG 26/2014
PROVINCE OF ONTARIO

DESIGN CRITERIA

*** SPECIAL LOADS ANALYSIS ***
GEOMETRY AND/OR BASIC LOADS CHANGED BY USER.
LOADS WERE DERIVED FROM USER INPUT
NO FURTHER MODIFICATIONS WERE MADE

SPECIFIED LOADS:

TOP CH.	LL	=	29.0	PSF
	DL	=	3.0	PSF
BOT CH.	LL	=	10.5	PSF
	DL	=	7.0	PSF
TOTAL LOAD		=	49.5	PSF

SPACING = 24.0 IN. C/C

LOADING IN FLAT SECTION BASED ON A SLOPE OF 2.00/12 MINIMUM

GIRDER TYPE: CPrimeHip
SIDE SETBACK = 3-8-4
END SETBACK = 5-10-8
END WALL WIDTH = 0-0
CORNER FRAMING TYPE: CONVENTIONAL
END JACK TYPE: CONVENTIONAL
APPLIED TO FRONT SIDE
- ADDT'L LOADS BASED ON 55 % OF GSL.
LOADS APPLIED TO FIRST 11-2-8 OF SPAN MEASURED FROM THE LEFT.

*** NON STANDARD GIRDER ***
ADDT'L USER-DEFINED LOADS APPLIED TO ALL LOAD CASES.

THIS TRUSS IS DESIGNED FOR RESIDENTIAL OR SMALL BUILDING REQUIREMENTS OF PART 9, NBCC 2010

THIS DESIGN COMPLIES WITH:
- PART 9 OF OBC 2012 , BCBC 2012 , ABC 2012
- CSA 086-09
- TPIC 2011

(55 % OF 37.6 P.S.F. G.S.L. PLUS 8.4 P.S.F. RAIN LOAD EQUALS 29.0 P.S.F. SPECIFIED ROOF LIVE LOAD

ALLOWABLE DEFL.(LL)= L/360 (1.03")
CALCULATED VERT. DEFL.(LL) = L/ 999 (0.34")
ALLOWABLE DEFL.(TL)= L/360 (1.03")
CALCULATED VERT. DEFL.(TL) = L/ 702 (0.53")

CSI: TC=0.65 (B-C:1) , BC=0.78 (Q-R:1) , WB=0.73 (C-S:1) , SSI=0.26 (C-D:1)

DOL LUMBER=1.00 NAIL=1.00 LS BEND=1.00 COMP=1.00 SHEAR=1.00 TENS= 1.00

COMPANION LIVE LOAD FACTOR = 0.50

AUTOSOLVE HEELS OFF

TRUSS PLATE MANUFACTURER IS NOT RESPONSIBLE FOR QUALITY CONTROL IN THE TRUSS MANUFACTURING PLANT .

A.14083625

CONTINUED ON PAGE 2

JOB NAME	TRUSS NAME	QUANTITY	PLY	JOB DESC.	DRWG NO.
244676	H26	1	1	TRUSS DESC.	

NAIL VALUES

PLATE	GRIP(DRY) (PSI)		SHEAR (PLI)		SECTION (PLI)	
	MAX	MIN	MAX	MIN	MAX	MIN
MT20	618	354	1667	822	2284	1656

PLATE PLACEMENT TOL. = 0.250 inches

PLATE ROTATION TOL. = 5.0 Deg.

JSI GRIP= 0.90 (O) (INPUT = 0.90)
JSI METAL= 0.99 (Q) (INPUT = 1.00)

LICENSED PROFESSIONAL ENGINEER
D. O'CONNOR
100009580
AUG 26 2014
PROVINCE OF ONTARIO

A.14083625(2)

JOB NAME	TRUSS NAME	QUANTITY	PLY	JOB DESC.	DRWG NO.
244676	H27	1	1	TRUSS DESC.	

Alpa Roof Truss, Maple

Version 7.500 S Oct 23 2013 MiTek Industries, Inc. Tue Aug 26 11:36:31 2014 Page 1
ID:o0wwtrWZe_90BmC?YOgW1cynpYC-miqgRNnYhbpwxPz?tgbo5uHzyxyo67krzl72PFyk?a_

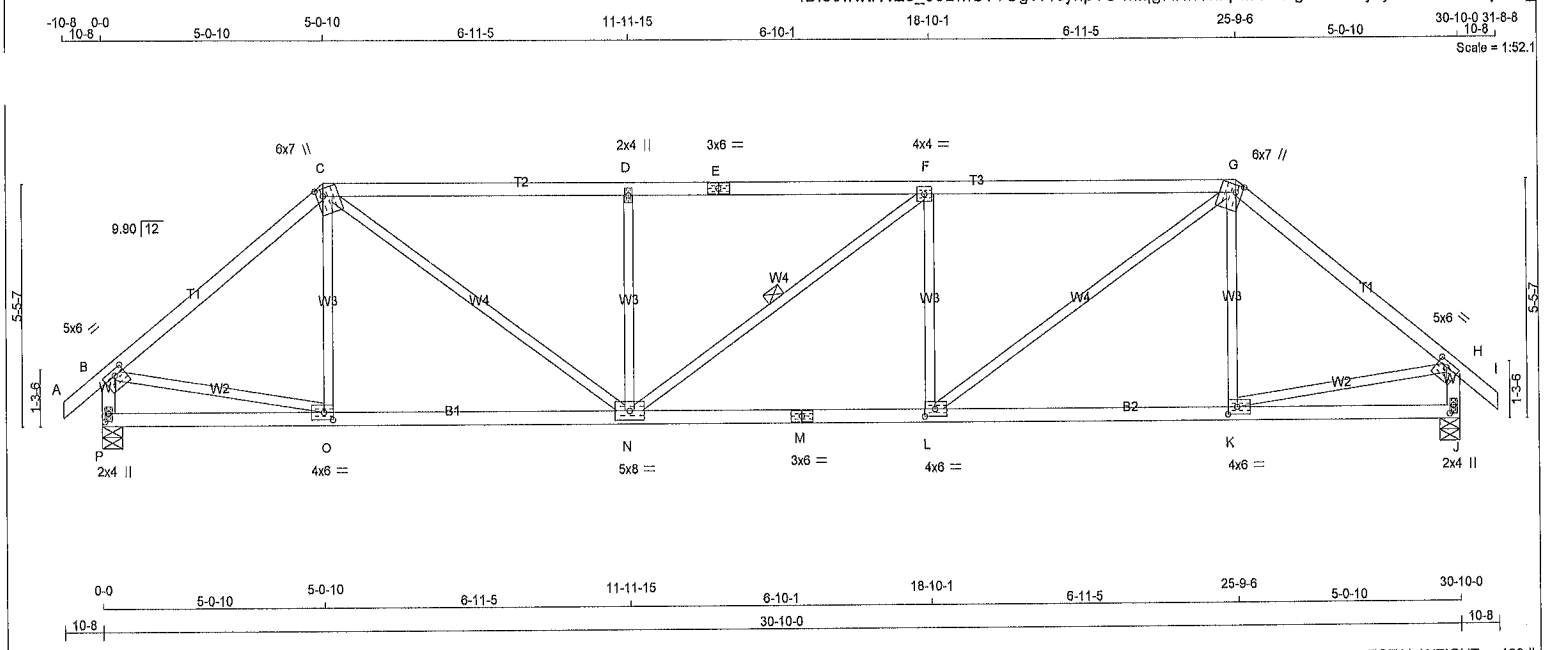

TOTAL WEIGHT = 123 lb

[M][F]

LUMBER

N. L. G. A. RULES

CHORDS	SIZE		LUMBER	DESCR.
A - C	2x4	DRY	No.2	SPF
C - E	2x4	DRY	No.2	SPF
E - G	2x4	DRY	No.2	SPF
G - I	2x4	DRY	No.2	SPF
P - B	2x4	DRY	No.2	SPF
J - H	2x4	DRY	No.2	SPF
P - M	2x4	DRY	No.2	SPF
M - J	2x4	DRY	No.2	SPF
WEBS EPT	2x3	DRY	No.2	SPF

DRY: SEASONED LUMBER.

PLATES (table is in inches)

JT	TYPE	PLATES	W	LEN	Y	X
B	TMVW-t	MT20	5.0	6.0	1.50	2.75
C	TTWW+m	MT20	6.0	7.0	2.00	1.75
D	TMW+w	MT20	2.0	4.0		
E	TS-t	MT20	3.0	6.0		
F	TMWW-t	MT20	4.0	4.0		
G	TTWW+m	MT20	6.0	7.0	2.00	1.75
H	TMVW-t	MT20	5.0	6.0	1.50	2.75
J	BMV1+p	MT20	2.0	4.0	2.25	1.00
K	BMWW-t	MT20	4.0	6.0	2.00	2.50
L	BMWW-t	MT20	4.0	6.0	2.00	2.75
M	BS-t	MT20	3.0	6.0		
N	BMWWW-t	MT20	5.0	8.0		
O	BMWW-t	MT20	4.0	6.0	2.00	2.50
P	BMV1+p	MT20	2.0	4.0	2.25	1.00

DIMENSIONS, SUPPORTS AND LOADINGS SPECIFIED BY FABRICATOR TO BE VERIFIED BY BUILDING DESIGNER

BEARINGS

JT	FACTORED GROSS REACTION VERT	HORZ	MAXIMUM FACTORED GROSS REACTION DOWN	HORZ	UPLIFT	INPUT BRG IN-SX	REQRD BRG IN-SX
P	1981	0	1981	0	0	5-8	2-15
J	1981	0	1981	0	0	5-8	2-15

UNFACTORED REACTIONS

JT	1ST LCASE COMBINED	MAX./MIN. COMPONENT REACTIONS SNOW	LIVE	WIND	DEAD
P	1589	951 / 0	324 / 0	0 / 0	314 / 0
J	1589	951 / 0	324 / 0	0 / 0	314 / 0

BEARING MATERIAL TO BE SPF NO.2 OR BETTER AT JOINT(S) P, J

BRACING

TOP CHORD TO BE SHEATHED OR MAX. PURLIN SPACING = 3.44FT.
MAX. UNBRACED BOTTOM CHORD LENGTH = 10.00FT. OR RIGID CEILING DIRECTLY APPLIED.

1 LATERAL BRACE(S) REQUIRED AT 1/ 2 LENGTH OF F-N.
END VERTICAL(S) MUST BE SHEATHED OR HAVE BRACES AS INDICATED IN THE MAX. UNBRACED LENGTH COLUMN OF THE TABLE BELOW

LOADING

TOTAL LOAD CASES: (3)

CHORDS

MEMB. FR-TO	MAX. FACTORED FORCE (LBS)	FACTORED VERT. LOAD (PLF) FROM	TO	LC1	MAX CSI (LC)	MAX UNBRAC LENGTH
A- B	0 / 29	-94.6	-94.6	0.06 (1)	10.00	
B- C	-2049 / 0	-94.6	-94.6	0.39 (1)	4.37	
C- D	-2787 / 0	-94.6	-94.6	0.71 (1)	3.44	
D- E	-2787 / 0	-94.6	-94.6	0.64 (1)	3.56	
E- F	-2787 / 0	-94.6	-94.6	0.64 (1)	3.56	
F- G	-2788 / 0	-94.6	-94.6	0.71 (1)	3.44	
G- H	-2049 / 0	-94.6	-94.6	0.39 (1)	4.37	
H- I	0 / 29	-94.6	-94.6	0.06 (1)	10.00	
P- B	-1929 / 0	0.0	0.0	0.20 (1)	6.06	
J- H	-1929 / 0	0.0	0.0	0.20 (1)	6.06	
P- O	0 / 0	-28.0	-28.0	0.24 (2)	10.00	
O- N	0 / 1575	-28.0	-28.0	0.43 (2)	10.00	
N- M	0 / 2788	-28.0	-28.0	0.58 (1)	10.00	
M- L	0 / 2788	-28.0	-28.0	0.58 (1)	10.00	
L- K	0 / 1575	-28.0	-28.0	0.43 (2)	10.00	
K- J	0 / 0	-28.0	-28.0	0.24 (2)	10.00	

WEBS

MEMB. FR-TO	MAX. FACTORED FORCE (LBS)	MAX CSI (LC)
O- C	-102 / 121	0.05 (1)
C- N	0 / 1507	0.34 (1)
N- D	-705 / 0	0.31 (1)
N- F	-2 / 0	0.00 (1)
L- F	-706 / 0	0.31 (1)
L- G	0 / 1509	0.34 (1)
K- G	-103 / 121	0.05 (1)
B- O	0 / 1604	0.36 (1)
K- H	0 / 1604	0.36 (1)

LICENSED PROFESSIONAL ENGINEER
D. O'CONNOR
100009580
AUG 26/2014
PROVINCE OF ONTARIO

DESIGN CRITERIA

SPECIFIED LOADS:

TOP CH.	LL	=	29.0	PSF
	DL	=	3.0	PSF
BOT CH.	LL	=	10.5	PSF
	DL	=	7.0	PSF
TOTAL LOAD		=	49.5	PSF

SPACING = 24.0 IN. C/C

LOADING IN FLAT SECTION BASED ON A SLOPE OF 2.00/12 MINIMUM

THIS TRUSS IS DESIGNED FOR RESIDENTIAL OR SMALL BUILDING REQUIREMENTS OF PART 9, NBCC 2010

THIS DESIGN COMPLIES WITH:
- PART 9 OF OBC 2012 , BCBC 2012 , ABC 2012
- CSA 086-09
- TPIC 2011

(55 % OF 37.6 P.S.F. G.S.L. PLUS 8.4 P.S.F. RAIN LOAD EQUALS 29.0 P.S.F. SPECIFIED ROOF LIVE LOAD

ALLOWABLE DEFL.(LL)= L/360 (1.03")
CALCULATED VERT. DEFL.(LL) = L/ 999 (0.17")
ALLOWABLE DEFL.(TL)= L/360 (1.03")
CALCULATED VERT. DEFL.(TL) = L/ 999 (0.28")

CSI: TC=0.71 (F-G;1) , BC=0.58 (L-N;1) , WB=0.36 (B-O;1) , SSI=0.31 (F-G;1)

DOL LUMBER=1.00 NAIL=1.00 LS BEND=1.10 COMP=1.10 SHEAR=1.10 TENS= 1.10

COMPANION LIVE LOAD FACTOR = 0.50

TRUSS PLATE MANUFACTURER IS NOT RESPONSIBLE FOR QUALITY CONTROL IN THE TRUSS MANUFACTURING PLANT .

NAIL VALUES

PLATE	GRIP(DRY) (PSI) MAX	MIN	SHEAR (PLI) MAX	MIN	SECTION (PLI) MAX	MIN
MT20	618	354	1667	822	2284	1656

PLATE PLACEMENT TOL. = 0.250 Inches

PLATE ROTATION TOL. = 5.0 Deg.

JSI GRIP= 0.89 (O) (INPUT = 0.90)
JSI METAL= 0.84 (M) (INPUT = 1.00)

A.14083626

JOB NAME	TRUSS NAME	QUANTITY	PLY	JOB DESC.	DRWG NO.
244676	H28	1	1	TRUSS DESC.	

Alpa Roof Truss, Maple

Version 7.500 S Oct 23 2013 MiTek Industries, Inc. Tue Aug 26 11:36:32 2014 Page 1

ID:o0wwtrWZe_90BmC?YOgW1cynpYC-EuO2fjnASuxnZYYBQN61e5qCELKvrSf?CPsbwiyk?Zz

Scale = 1:52.3

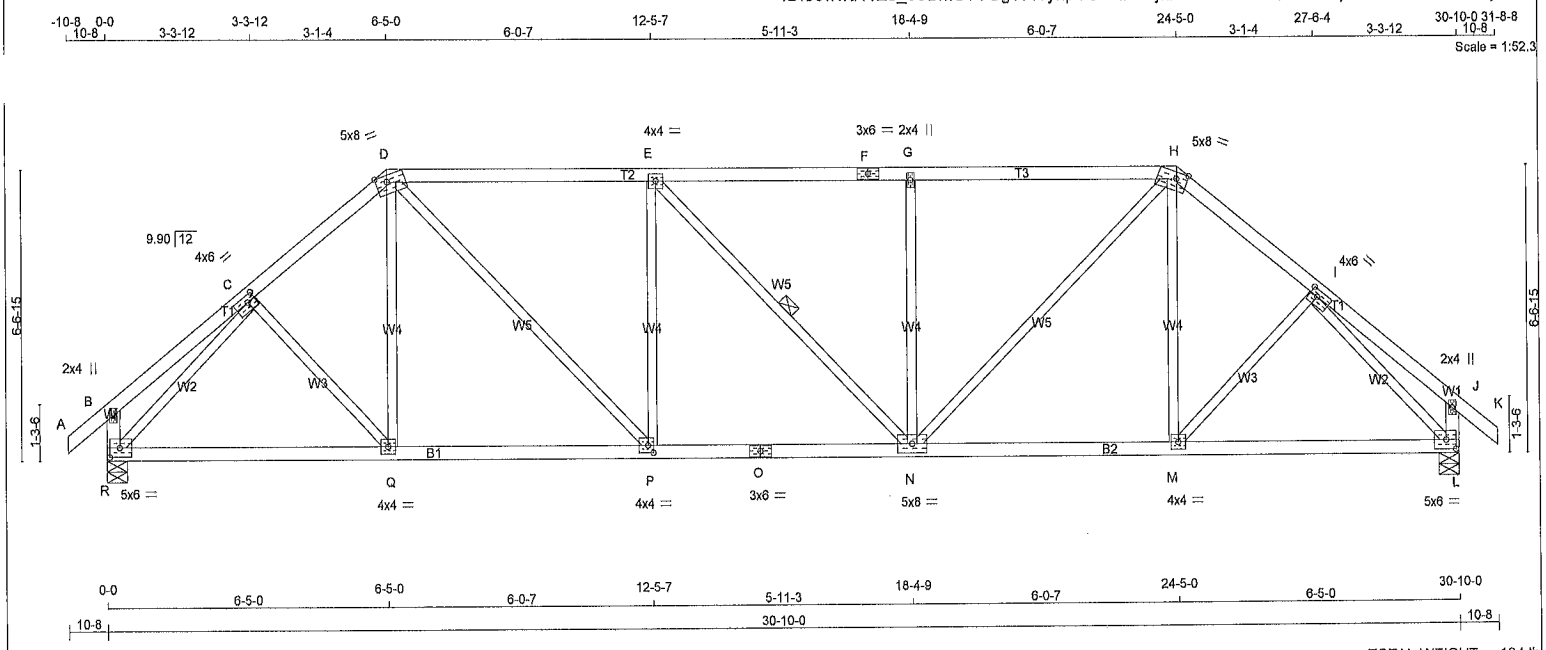

TOTAL WEIGHT = 134 lb

[M][F]

LUMBER

N. L. G. A. RULES

CHORDS	SIZE		LUMBER	DESCR.
A - D	2x4	DRY	No.2	SPF
D - F	2x4	DRY	No.2	SPF
F - H	2x4	DRY	No.2	SPF
H - K	2x4	DRY	No.2	SPF
R - B	2x4	DRY	No.2	SPF
L - J	2x4	DRY	No.2	SPF
R - O	2x4	DRY	No.2	SPF
O - L	2x4	DRY	No.2	SPF
WEBS	2x3	DRY	No.2	SPF
EPT				

DRY: SEASONED LUMBER.

PLATES (table is in inches)

JT	TYPE	PLATES	W	LEN	Y	X
B	TMV+p	MT20	2.0	4.0		
C	TMWW-t	MT20	4.0	6.0	1.75	2.25
D	TTWW-m	MT20	5.0	8.0	1.75	3.00
E	TMWW-t	MT20	4.0	4.0		
F	TS-t	MT20	3.0	6.0		
G	TMW+w	MT20	2.0	4.0		
H	TTWW-m	MT20	5.0	8.0	1.75	3.00
I	TMWW-t	MT20	4.0	6.0	1.75	2.25
J	TMV+p	MT20	2.0	4.0		
L	BMVW1-t	MT20	5.0	6.0	2.50	2.75
M	BMWW-t	MT20	4.0	4.0		
N	BMWWW-t	MT20	5.0	8.0		
O	BS-t	MT20	3.0	6.0		
P	BMWW-t	MT20	4.0	4.0	2.00	1.50
Q	BMWW-t	MT20	4.0	4.0		
R	BMVW1-t	MT20	5.0	6.0	2.50	2.75

DIMENSIONS, SUPPORTS AND LOADINGS SPECIFIED BY FABRICATOR TO BE VERIFIED BY BUILDING DESIGNER

BEARINGS

JT	FACTORED GROSS REACTION VERT	HORZ	MAXIMUM FACTORED GROSS REACTION DOWN	HORZ	UPLIFT	INPUT BRG IN-SX	REQRD BRG IN-SX
R	1981	0	1981	0	0	5-8	2-2
L	1981	0	1981	0	0	5-8	2-2

UNFACTORED REACTIONS

JT	1ST LCASE COMBINED	MAX./MIN. COMPONENT REACTIONS SNOW	LIVE	WIND	DEAD
R	1589	951 / 0	324 / 0	0 / 0	314 / 0
L	1589	951 / 0	324 / 0	0 / 0	314 / 0

BEARING MATERIAL TO BE SPF NO.2 OR BETTER AT JOINT(S) R, L

BRACING

TOP CHORD TO BE SHEATHED OR MAX. PURLIN SPACING = 4.04FT.
MAX. UNBRACED BOTTOM CHORD LENGTH = 10.00FT. OR RIGID CEILING DIRECTLY APPLIED.

1 LATERAL BRACE(S) REQUIRED AT 1/ 2 LENGTH OF E-N.
END VERTICAL(S) MUST BE SHEATHED OR HAVE BRACES AS INDICATED IN THE MAX. UNBRACED LENGTH COLUMN OF THE TABLE BELOW

LOADING

TOTAL LOAD CASES: (3)

CHORDS

MEMB. FR-TO	MAX. FACTORED FORCE (LBS)	FACTORED VERT. LOAD LC1 (PLF) FROM	TO	MAX CSI (LC)	MAX UNBRAC LENGTH
A- B	0 / 29	-94.6	-94.6	0.06 (1)	10.00
B- C	0 / 19	-94.6	-94.6	0.13 (1)	10.00
C- D	-2034 / 0	-94.6	-94.6	0.15 (1)	4.63
D- E	-2296 / 0	-94.6	-94.6	0.48 (1)	4.04
E- F	-2294 / 0	-94.6	-94.6	0.44 (1)	4.10
F- G	-2294 / 0	-94.6	-94.6	0.44 (1)	4.10
G- H	-2294 / 0	-94.6	-94.6	0.48 (1)	4.04
H- I	-2035 / 0	-94.6	-94.6	0.15 (1)	4.63
I- J	0 / 19	-94.6	-94.6	0.13 (1)	10.00
J- K	0 / 29	-94.6	-94.6	0.06 (1)	10.00
R- B	-213 / 0	0.0	0.0	0.02 (1)	7.81
L- J	-213 / 0	0.0	0.0	0.02 (1)	7.81
R- Q	0 / 1509	-28.0	-28.0	0.44 (2)	10.00
Q- P	0 / 1553	-28.0	-28.0	0.45 (2)	10.00
P- O	0 / 2296	-28.0	-28.0	0.46 (1)	10.00
O- N	0 / 2296	-28.0	-28.0	0.46 (1)	10.00
N- M	0 / 1553	-28.0	-28.0	0.45 (2)	10.00
M- L	0 / 1509	-28.0	-28.0	0.44 (2)	10.00

WEBS

MEMB. FR-TO	MAX. FACTORED FORCE (LBS)	MAX CSI (LC)
C- Q	0 / 124	0.03 (2)
Q- D	0 / 258	0.06 (2)
D- P	0 / 1071	0.24 (1)
P- E	-612 / 0	0.43 (1)
E- N	-2 / 0	0.00 (1)
N- G	-611 / 0	0.43 (1)
N- H	0 / 1069	0.24 (1)
M- H	0 / 258	0.06 (2)
M- I	0 / 124	0.03 (2)
R- C	-2269 / 0	0.83 (1)
I- L	-2269 / 0	0.83 (1)

LICENSED PROFESSIONAL ENGINEER
D. O'CONNOR
100009580
AUG 26/2014
PROVINCE OF ONTARIO

DESIGN CRITERIA

SPECIFIED LOADS:

TOP CH.	LL	=	29.0	PSF
	DL	=	3.0	PSF
BOT CH.	LL	=	10.5	PSF
	DL	=	7.0	PSF
TOTAL LOAD		=	49.5	PSF

SPACING = 24.0 IN. C/C

LOADING IN FLAT SECTION BASED ON A SLOPE OF 2.00/12 MINIMUM

THIS TRUSS IS DESIGNED FOR RESIDENTIAL OR SMALL BUILDING REQUIREMENTS OF PART 9, NBCC 2010

THIS DESIGN COMPLIES WITH:
- PART 9 OF OBC 2012 , BCBC 2012 , ABC 2012
- CSA 086-09
- TPIC 2011

(55 % OF 37.6 P.S.F. G.S.L. PLUS 8.4 P.S.F. RAIN LOAD EQUALS 29.0 P.S.F. SPECIFIED ROOF LIVE LOAD

ALLOWABLE DEFL.(LL)= L/360 (1.03")
CALCULATED VERT. DEFL.(LL) = L/ 999 (0.13")
ALLOWABLE DEFL.(TL)= L/360 (1.03")
CALCULATED VERT. DEFL.(TL) = L/ 999 (0.21")

CSI: TC=0.48 (D-E:1) , BC=0.46 (N-P:1) , WB=0.83 (I-L:1) , SSI=0.27 (D-E:1)

DOL LUMBER=1.00 NAIL=1.00 LS BEND=1.10 COMP=1.10 SHEAR=1.10 TENS= 1.10

COMPANION LIVE LOAD FACTOR = 0.50

TRUSS PLATE MANUFACTURER IS NOT RESPONSIBLE FOR QUALITY CONTROL IN THE TRUSS MANUFACTURING PLANT .

NAIL VALUES

PLATE	GRIP(DRY) (PSI) MAX	MIN	SHEAR (PLI) MAX	MIN	SECTION (PLI) MAX	MIN
MT20	618	354	1667	822	2284	1656

PLATE PLACEMENT TOL. = 0.250 inches

PLATE ROTATION TOL. = 5.0 Deg.

JSI GRIP= 0.90 (I) (INPUT = 0.90)
JSI METAL= 0.69 (O) (INPUT = 1.00)

A.14083627

JOB NAME	TRUSS NAME	QUANTITY	PLY	JOB DESC.	DRWG NO.
244676	H29	1	1	TRUSS DESC.	

Alpa Roof Truss, Maple

Version 7.500 S Oct 23 2013 MiTek Industries, Inc. Tue Aug 26 11:36:33 2014 Page 1

ID:o0wwtrWZe_90BmC?YOgW1cynpYC-j4yQs2ooDC3eBi7N_5dGAJNLwlffau?8R3c9S8yk?Zy

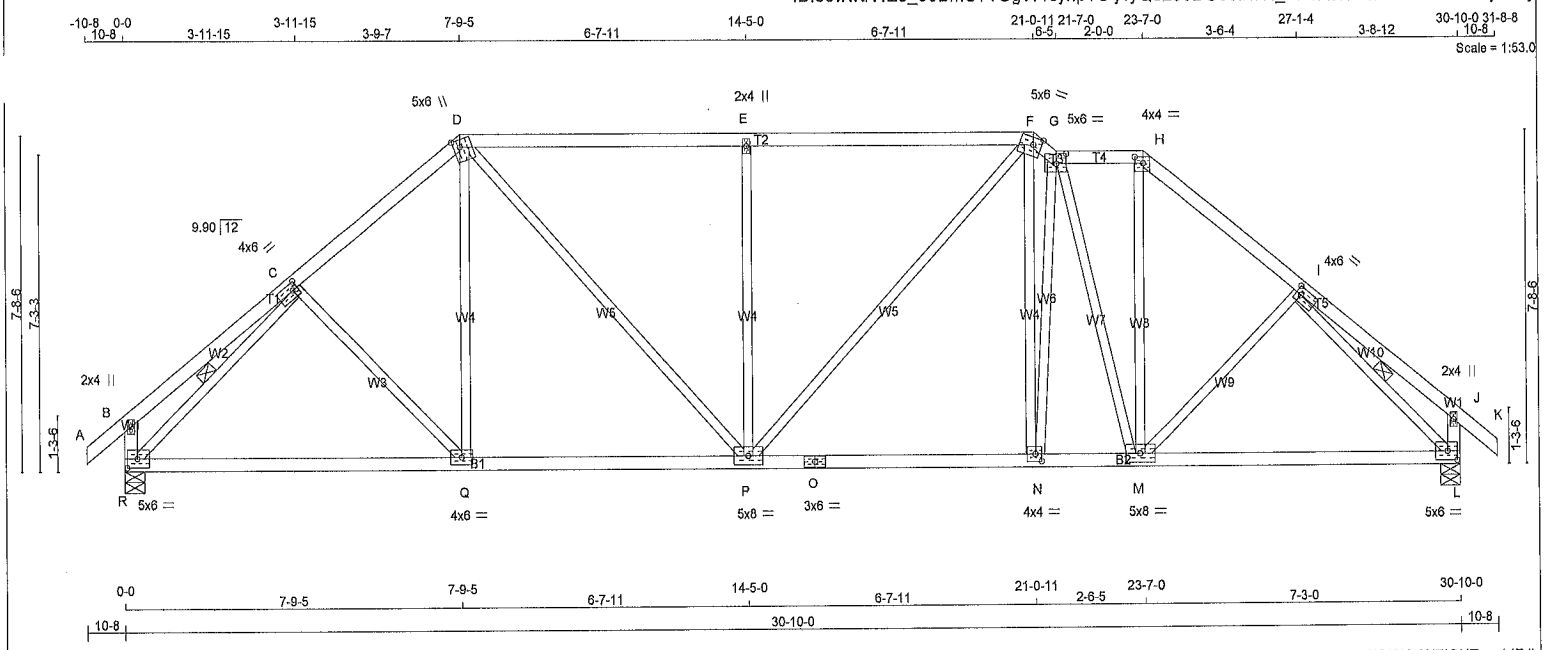

LUMBER

N. L. G. A. RULES

CHORDS	SIZE		LUMBER	DESCR.
A - D	2x4	DRY	No.2	SPF
D - F	2x4	DRY	No.2	SPF
F - G	2x4	DRY	No.2	SPF
G - H	2x4	DRY	No.2	SPF
H - K	2x4	DRY	No.2	SPF
R - B	2x4	DRY	No.2	SPF
L - J	2x4	DRY	No.2	SPF
R - O	2x4	DRY	No.2	SPF
O - L	2x4	DRY	No.2	SPF
WEBS	2x3	DRY	No.2	SPF

EXCEPT

DRY: SEASONED LUMBER.

PLATES (table is in inches)

JT	TYPE	PLATES	W	LEN	Y	X
B	TMV+p	MT20	2.0	4.0		
C	TMWW-t	MT20	4.0	6.0	2.00	1.50
D	TTWW+m	MT20	5.0	6.0	2.00	1.75
E	TMW+w	MT20	2.0	4.0		
F	TTWW-m	MT20	5.0	6.0	2.00	2.25
G	TTWW-l	MT20	5.0	6.0	2.75	2.75
H	TTW-l	MT20	4.0	4.0	1.75	2.25
I	TMWW-t	MT20	4.0	6.0	2.00	1.50
J	TMV+p	MT20	2.0	4.0		
L	BMVW1-t	MT20	5.0	6.0	2.50	2.75
M	BMWWW-t	MT20	5.0	8.0		
N	BMWW-t	MT20	4.0	4.0	2.00	1.75
O	BS-t	MT20	3.0	6.0		
P	BMWWW-t	MT20	5.0	8.0		
Q	BMWW-t	MT20	4.0	6.0		
R	BMVW1-t	MT20	5.0	6.0	2.50	2.75

DIMENSIONS, SUPPORTS AND LOADINGS SPECIFIED BY FABRICATOR TO BE VERIFIED BY BUILDING DESIGNER

BEARINGS

JT	FACTORED GROSS REACTION VERT	HORZ	MAXIMUM FACTORED GROSS REACTION DOWN	HORZ	UPLIFT	INPUT BRG IN-SX	REQRD BRG IN-SX
R	1981	0	1981	0	0	5-8	2-2
L	1981	0	1981	0	0	5-8	2-2

UNFACTORED REACTIONS

JT	1ST LCASE COMBINED	MAX./MIN. COMPONENT REACTIONS SNOW	LIVE	WIND	DEAD
R	1589	951 / 0	324 / 0	0 / 0	314 / 0
L	1589	951 / 0	324 / 0	0 / 0	314 / 0

BEARING MATERIAL TO BE SPF NO.2 OR BETTER AT JOINT(S) R, L

BRACING

TOP CHORD TO BE SHEATHED OR MAX. PURLIN SPACING = 4.02FT.
MAX. UNBRACED BOTTOM CHORD LENGTH = 10.00FT. OR RIGID CEILING DIRECTLY APPLIED.

1 LATERAL BRACE(S) REQUIRED AT 1/ 2 LENGTH OF C-R, I-L.
END VERTICAL(S) MUST BE SHEATHED OR HAVE BRACES AS INDICATED IN THE MAX. UNBRACED LENGTH COLUMN OF THE TABLE BELOW

LOADING

TOTAL LOAD CASES: (3)

CHORDS

MEMB. FR-TO	MAX. FACTORED FORCE (LBS)	FACTORED VERT. LOAD LC1 (PLF) FROM	TO	MAX CSI (LC)	MAX UNBRAC LENGTH
A- B	0 / 29	-94.6	-94.6	0.06 (1)	10.00
B- C	0 / 25	-94.6	-94.6	0.21 (1)	10.00
C- D	-1984 / 0	-94.6	-94.6	0.22 (1)	4.61
D- E	-2038 / 0	-94.6	-94.6	0.61 (1)	4.02
E- F	-2038 / 0	-94.6	-94.6	0.61 (1)	4.02
F- G	-2237 / 0	-94.6	-94.6	0.05 (1)	4.55
G- H	-1539 / 0	-94.6	-94.6	0.07 (1)	5.26
H- I	-2003 / 0	-94.6	-94.6	0.19 (1)	4.63
I- J	0 / 22	-94.6	-94.6	0.17 (1)	10.00
J- K	0 / 29	-94.6	-94.6	0.06 (1)	10.00
R- B	-234 / 0	0.0	0.0	0.02 (1)	7.81
L- J	-227 / 0	0.0	0.0	0.02 (1)	7.81
R- Q	0 / 1548	-28.0	-28.0	0.55 (2)	10.00
Q- P	0 / 1511	-28.0	-28.0	0.56 (2)	10.00
P- O	0 / 1715	-28.0	-28.0	0.42 (2)	10.00
O- N	0 / 1715	-28.0	-28.0	0.42 (2)	10.00
N- M	0 / 1769	-28.0	-28.0	0.52 (2)	10.00
M- L	0 / 1533	-28.0	-28.0	0.48 (2)	10.00

WEBS

MEMB. FR-TO	MAX. FACTORED FORCE (LBS)	MAX CSI (LC)
C- Q	-58 / 61	0.03 (1)
Q- D	0 / 363	0.08 (2)
D- P	0 / 790	0.18 (1)
P- E	-767 / 0	0.84 (1)
P- F	0 / 483	0.11 (1)
N- F	0 / 795	0.18 (1)
N- G	-701 / 0	0.67 (1)
G- M	-874 / 0	0.89 (1)
M- H	0 / 1033	0.23 (1)
M- I	-13 / 85	0.02 (2)
R- C	-2267 / 0	0.53 (1)
I- L	-2268 / 0	0.49 (1)

LICENSED PROFESSIONAL ENGINEER
D. O'CONNOR
100009580
Aug 26/2014
PROVINCE OF ONTARIO

DESIGN CRITERIA

SPECIFIED LOADS:

TOP CH.	LL	=	29.0	PSF
	DL	=	3.0	PSF
BOT CH.	LL	=	10.5	PSF
	DL	=	7.0	PSF
TOTAL LOAD		=	49.5	PSF

SPACING = 24.0 IN. C/C

LOADING IN ALL FLAT SECTIONS BASED ON A SLOPE OF 2.00/12 MINIMUM

THIS TRUSS IS DESIGNED FOR RESIDENTIAL OR SMALL BUILDING REQUIREMENTS OF PART 9, NBCC 2010

THIS DESIGN COMPLIES WITH:
- PART 9 OF OBC 2012 , BCBC 2012 , ABC 2012
- CSA 086-09
- TPIC 2011

(55 % OF 37.6 P.S.F. G.S.L. PLUS
8.4 P.S.F. RAIN LOAD EQUALS
29.0 P.S.F. SPECIFIED ROOF LIVE LOAD

ALLOWABLE DEFL.(LL)= L/360 (1.03")
CALCULATED VERT. DEFL.(LL) = L/ 999 (0.17")
ALLOWABLE DEFL.(TL)= L/360 (1.03")
CALCULATED VERT. DEFL.(TL) = L/ 999 (0.28")

CSI: TC=0.61 (D-E:1) , BC=0.56 (P-Q:2) , WB=0.89 (G-M:1) , SSI=0.30 (D-E:1)

DOL LUMBER=1.00 NAIL=1.00 LS BEND=1.10 COMP=1.10 SHEAR=1.10 TENS= 1.10

COMPANION LIVE LOAD FACTOR = 0.50

TRUSS PLATE MANUFACTURER IS NOT RESPONSIBLE FOR QUALITY CONTROL IN THE TRUSS MANUFACTURING PLANT .

NAIL VALUES

PLATE	GRIP(DRY) (PSI) MAX	MIN	SHEAR (PLI) MAX	MIN	SECTION (PLI) MAX	MIN
MT20	618	354	1667	822	2284	1656

PLATE PLACEMENT TOL. = 0.250 inches

PLATE ROTATION TOL. = 5.0 Deg.

JSI GRIP= 0.88 (H) (INPUT = 0.90)
JSI METAL= 0.56 (C) (INPUT = 1.00)

A.14083628

JOB NAME	TRUSS NAME	QUANTITY	PLY	JOB DESC.	DRWG NO.
244676	H30	1	1	TRUSS DESC.	

Alpa Roof Truss, Maple

Version 7.500 S Oct 23 2013 MiTek Industries, Inc. Tue Aug 26 11:36:35 2014 Page 1

ID:o0wwtrWZe_90BmC?YOgW1cynpYC-fT4BHkq3lpJMQ0Hm6VfkFkSkQYl72sQRuN5GX1yk?Zw

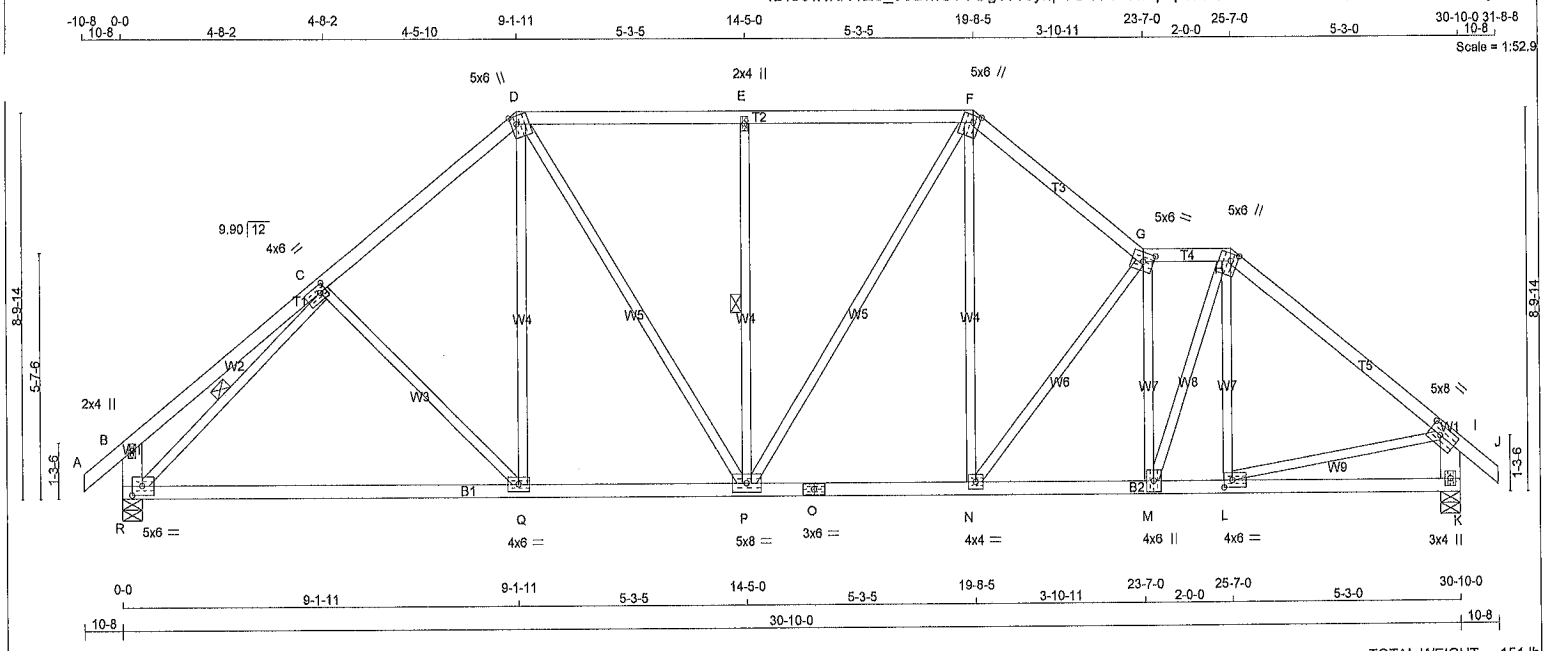

LUMBER

N. L. G. A. RULES

CHORDS	SIZE		LUMBER	DESCR.
A - D	2x4	DRY	No.2	SPF
D - F	2x4	DRY	No.2	SPF
F - G	2x4	DRY	No.2	SPF
G - H	2x4	DRY	No.2	SPF
H - J	2x4	DRY	No.2	SPF
R - B	2x6	DRY	No.2	SPF
K - I	2x6	DRY	No.2	SPF
R - O	2x4	DRY	No.2	SPF
O - K	2x4	DRY	No.2	SPF
WEBS	2x3	DRY	No.2	SPF
EXCEPT				

DRY: SEASONED LUMBER.

PLATES (table is in inches)

JT	TYPE	PLATES	W	LEN	Y	X
B	TMV+p	MT20	2.0	4.0		
C	TMWW-t	MT20	4.0	6.0	2.00	1.75
D	TTWW+m	MT20	5.0	6.0	2.25	1.50
E	TMW+w	MT20	2.0	4.0		
F	TTWW+m	MT20	5.0	6.0	2.00	1.75
G	TTWW-m	MT20	5.0	6.0	2.50	2.75
H	TTWW+m	MT20	5.0	6.0	2.00	1.75
I	TMVW-t	MT20	5.0	8.0	2.50	3.25
K	BMV1+p	MT20	3.0	4.0		
L	BMWW-t	MT20	4.0	6.0	2.00	2.25
M	BMWW+t	MT20	4.0	6.0		
N	BMWW-t	MT20	4.0	4.0		
O	BS-t	MT20	3.0	6.0		
P	BMWWW-t	MT20	5.0	8.0		
Q	BMWW-t	MT20	4.0	6.0		
R	BMVW1-t	MT20	5.0	6.0	2.50	2.75

DIMENSIONS, SUPPORTS AND LOADINGS SPECIFIED BY FABRICATOR TO BE VERIFIED BY BUILDING DESIGNER

BEARINGS

JT	FACTORED GROSS REACTION VERT	HORZ	MAXIMUM FACTORED GROSS REACTION DOWN	HORZ	UPLIFT	INPUT BRG IN-SX	REQRD BRG IN-SX
R	1981	0	1981	0	0	5-8	2-2
K	1981	0	1981	0	0	5-8	2-2

UNFACTORED REACTIONS

JT	1ST LCASE COMBINED	MAX./MIN. COMPONENT REACTIONS SNOW	LIVE	WIND	DEAD
R	1589	951 / 0	324 / 0	0 / 0	314 / 0
K	1589	951 / 0	324 / 0	0 / 0	314 / 0

BEARING MATERIAL TO BE SPF NO.2 OR BETTER AT JOINT(S) R, K

BRACING

TOP CHORD TO BE SHEATHED OR MAX. PURLIN SPACING = 4.34FT.
MAX. UNBRACED BOTTOM CHORD LENGTH = 10.00FT. OR RIGID CEILING DIRECTLY APPLIED.

1 LATERAL BRACE(S) REQUIRED AT 1/ 2 LENGTH OF E-P, C-R.
END VERTICAL(S) MUST BE SHEATHED OR HAVE BRACES AS INDICATED IN THE MAX. UNBRACED LENGTH COLUMN OF THE TABLE BELOW

LOADING

TOTAL LOAD CASES: (3)

CHORDS

MEMB. FR-TO	MAX. FACTORED FORCE (LBS)	FACTORED VERT. LOAD LC1 (PLF) FROM	TO	MAX CSI (LC)	MAX UNBRAC LENGTH
A- B	0 / 29	-94.6	-94.6	0.06 (1)	10.00
B- C	0 / 31	-94.6	-94.6	0.31 (1)	10.00
C- D	-1915 / 0	-94.6	-94.6	0.30 (1)	4.60
D- E	-1739 / 0	-94.6	-94.6	0.37 (1)	4.66
E- F	-1739 / 0	-94.6	-94.6	0.37 (1)	4.66
F- G	-2049 / 0	-94.6	-94.6	0.24 (1)	4.53
G- H	-1952 / 0	-94.6	-94.6	0.09 (1)	4.77
H- I	-2041 / 0	-94.6	-94.6	0.42 (1)	4.34
I- J	0 / 29	-94.6	-94.6	0.06 (1)	10.00
R- B	-257 / 0	0.0	0.0	0.02 (1)	7.81
K- I	-1921 / 0	0.0	0.0	0.13 (1)	7.25
R- Q	0 / 1565	-28.0	-28.0	0.68 (2)	10.00
Q- P	0 / 1454	-28.0	-28.0	0.68 (2)	10.00
P- O	0 / 1589	-28.0	-28.0	0.35 (1)	10.00
O- N	0 / 1589	-28.0	-28.0	0.35 (1)	10.00
N- M	0 / 1973	-28.0	-28.0	0.41 (1)	10.00
M- L	0 / 1569	-28.0	-28.0	0.36 (1)	10.00
L- K	0 / 0	-28.0	-28.0	0.18 (2)	10.00

WEBS

MEMB. FR-TO	MAX. FACTORED FORCE (LBS)	MAX CSI (LC)
C- Q	-164 / 17	0.13 (1)
Q- D	0 / 456	0.10 (2)
D- P	0 / 541	0.12 (1)
P- E	-604 / 0	0.30 (1)
P- F	0 / 285	0.06 (1)
N- F	0 / 680	0.15 (1)
N- G	-652 / 0	0.52 (1)
M- G	-1062 / 0	0.51 (1)
M- H	0 / 1136	0.26 (1)
L- H	-109 / 77	0.05 (1)
R- C	-2251 / 0	0.64 (1)
L- I	0 / 1596	0.36 (1)

LICENSED PROFESSIONAL ENGINEER
D. O'CONNOR
100009580
AUG 26 2014
PROVINCE OF ONTARIO

DESIGN CRITERIA

SPECIFIED LOADS:

TOP CH.	LL	=	29.0	PSF
	DL	=	3.0	PSF
BOT CH.	LL	=	10.5	PSF
	DL	=	7.0	PSF
TOTAL LOAD		=	49.5	PSF

SPACING = 24.0 IN. C/C

LOADING IN ALL FLAT SECTIONS BASED ON A SLOPE OF 2.00/12 MINIMUM

THIS TRUSS IS DESIGNED FOR RESIDENTIAL OR SMALL BUILDING REQUIREMENTS OF PART 9, NBCC 2010

THIS DESIGN COMPLIES WITH:
- PART 9 OF OBC 2012 , BCBC 2012 , ABC 2012
- CSA 086-09
- TPIC 2011

(55 % OF 37.6 P.S.F. G.S.L. PLUS
8.4 P.S.F. RAIN LOAD EQUALS
29.0 P.S.F. SPECIFIED ROOF LIVE LOAD

ALLOWABLE DEFL.(LL)= L/360 (1.03")
CALCULATED VERT. DEFL.(LL) = L/ 999 (0.30")
ALLOWABLE DEFL.(TL)= L/360 (1.03")
CALCULATED VERT. DEFL.(TL) = L/ 751 (0.49")

CSI: TC=0.42 (H-I:1) , BC=0.68 (P-Q:2) , WB=0.64 (C-R:1) , SSI=0.24 (E-F:1)

DOL LUMBER=1.00 NAIL=1.00 LS BEND=1.10 COMP=1.10 SHEAR=1.10 TENS= 1.10

COMPANION LIVE LOAD FACTOR = 0.50

AUTOSOLVE HEELS OFF

TRUSS PLATE MANUFACTURER IS NOT RESPONSIBLE FOR QUALITY CONTROL IN THE TRUSS MANUFACTURING PLANT .

NAIL VALUES

PLATE	GRIP(DRY) (PSI) MAX	MIN	SHEAR (PLI) MAX	MIN	SECTION (PLI) MAX	MIN
MT20	618	354	1667	822	2284	1656

PLATE PLACEMENT TOL. = 0.250 inches

PLATE ROTATION TOL. = 5.0 Deg.

JSI GRIP= 0.89 (C) (INPUT = 0.90)
JSI METAL= 0.56 (C) (INPUT = 1.00)

A.14083629

JOB NAME	TRUSS NAME	QUANTITY	PLY	JOB DESC.	DRWG NO.
244676	H35	3	1	TRUSS DESC.	

Alpa Roof Truss, Maple

Version 7.500 S Oct 23 2013 MiTek Industries, Inc. Tue Aug 26 11:36:41 2014 Page 1

ID:o0wwtrWZe_90BmC?YOgW1cynpYC-UdRSXoupLf4W8xkwSmm8V?immzlYSUEJHJYakgyk?Zq

Scale = 1:53.4

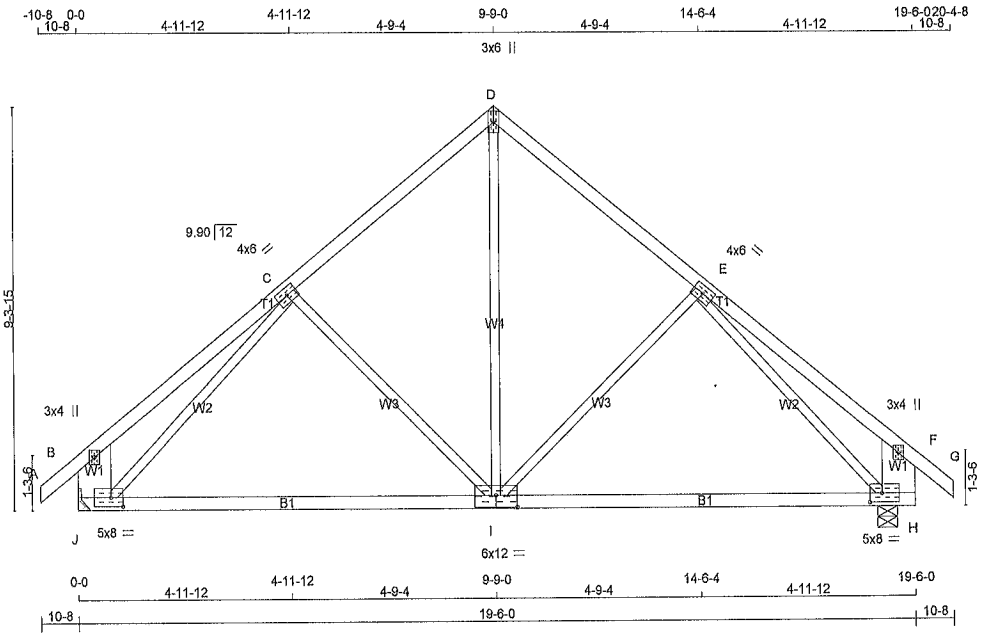

TOTAL WEIGHT = 3 X 90 = 269 lb

[M][F]

LUMBER

N. L. G. A. RULES

CHORDS	SIZE		LUMBER	DESCR.
A - D	2x4	DRY	No.2	SPF
D - G	2x4	DRY	No.2	SPF
J - B	2x10	DRY	No.2	SPF
H - F	2x10	DRY	No.2	SPF
J - I	2x4	DRY	No.2	SPF
I - H	2x4	DRY	No.2	SPF
ALL WEBS EXCEPT	2x3	DRY	No.2	SPF

SEASONED LUMBER.

PLATES (table is in inches)

JT	TYPE	PLATES	W	LEN	Y	X
B	TMV+p	MT20	3.0	4.0		
C	TMWW-t	MT20	4.0	6.0		
D	TTW+p	MT20	3.0	6.0		
E	TMWW-t	MT20	4.0	6.0		
F	TMV+p	MT20	3.0	4.0		
H	BMVW1-t	MT20	5.0	8.0	2.50	3.25
I	BSWWW-l	MT20	6.0	12.0	3.25	6.00
J	BMVW1-t	MT20	5.0	8.0	2.50	3.25

DIMENSIONS, SUPPORTS AND LOADINGS SPECIFIED BY FABRICATOR TO BE VERIFIED BY BUILDING DESIGNER

BEARINGS

JT	FACTORED GROSS REACTION VERT	HORZ	MAXIMUM FACTORED GROSS REACTION DOWN	HORZ	UPLIFT	INPUT BRG	REQRD BRG
J	1287	0	1287	0	0	IN-SX	IN-SX
						HANGER BY OTHERS	
						MIN. SEAT SIZE: 1-8	
H	1287	0	1287	0	0	5-8	1-8

UNFACTORED REACTIONS

JT	1ST LCASE COMBINED	MAX./MIN. COMPONENT REACTIONS SNOW	LIVE	WIND	DEAD
J	1028	622 / 0	205 / 0	0 / 0	201 / 0
H	1028	622 / 0	205 / 0	0 / 0	201 / 0

BEARING MATERIAL TO BE SPF NO.2 OR BETTER AT JOINT(S) H

BRACING

TOP CHORD TO BE SHEATHED OR MAX. PURLIN SPACING = 6.07FT.
MAX. UNBRACED BOTTOM CHORD LENGTH = 10.00FT. OR RIGID CEILING DIRECTLY APPLIED.

LOADING

TOTAL LOAD CASES: (3)

CHORDS

MEMB. FR-TO	MAX. FACTORED FORCE (LBS)	FACTORED VERT. LOAD LC1 (PLF) FROM	TO	MAX CSI (LC)	MAX UNBRAC LENGTH
A- B	0 / 29	-94.6	-94.6	0.06 (1)	10.00
B- C	0 / 35	-94.6	-94.6	0.37 (1)	10.00
C- D	-921 / 0	-94.6	-94.6	0.29 (1)	6.07
D- E	-921 / 0	-94.6	-94.6	0.29 (1)	6.07
E- F	0 / 35	-94.6	-94.6	0.37 (1)	10.00
F- G	0 / 29	-94.6	-94.6	0.06 (1)	10.00
J- B	-266 / 0	0.0	0.0	0.01 (1)	7.81
H- F	-266 / 0	0.0	0.0	0.01 (1)	7.81
J- I	0 / 899	-28.0	-28.0	0.88 (2)	10.00
I- H	0 / 899	-28.0	-28.0	0.88 (2)	10.00

WEBS

MEMB. FR-TO	MAX. FACTORED FORCE (LBS)	MAX CSI (LC)
I- D	0 / 774	0.17 (1)
I- E	-306 / 0	0.28 (1)
C- I	-306 / 0	0.28 (1)
J- C	-1284 / 0	1.00 (1)
E- H	-1284 / 0	1.00 (1)

LICENSED PROFESSIONAL ENGINEER
D. O'CONNOR
100009580
AUG 26 2014
PROVINCE OF ONTARIO

DESIGN CRITERIA

SPECIFIED LOADS:

TOP CH.	LL	=	29.0	PSF
	DL	=	3.0	PSF
BOT CH.	LL	=	10.5	PSF
	DL	=	7.0	PSF
TOTAL LOAD		=	49.5	PSF

SPACING = 24.0 IN. C/C

THIS TRUSS IS DESIGNED FOR RESIDENTIAL OR SMALL BUILDING REQUIREMENTS OF PART 9, NBCC 2010

THIS DESIGN COMPLIES WITH:
- PART 9 OF OBC 2012 , BCBC 2012 , ABC 2012
- CSA 086-09
- TPIC 2011

(55 % OF 37.6 P.S.F. G.S.L. PLUS
8.4 P.S.F. RAIN LOAD EQUALS
29.0 P.S.F. SPECIFIED ROOF LIVE LOAD

ALLOWABLE DEFL.(LL)= L/360 (0.65")
CALCULATED VERT. DEFL.(LL) = L/ 906 (0.26")
ALLOWABLE DEFL.(TL)= L/360 (0.65")
CALCULATED VERT. DEFL.(TL) = L/ 545 (0.43")

CSI: TC=0.37 (E-F:1) , BC=0.88 (I-J:2) , WB=1.00 (E-H:1) , SSI=0.23 (I-J:2)

DOL LUMBER=1.00 NAIL=1.00 LS BEND=1.10 COMP=1.10 SHEAR=1.10 TENS= 1.10

COMPANION LIVE LOAD FACTOR = 0.50

AUTOSOLVE HEELS OFF

TRUSS PLATE MANUFACTURER IS NOT RESPONSIBLE FOR QUALITY CONTROL IN THE TRUSS MANUFACTURING PLANT .

NAIL VALUES

PLATE	GRIP(DRY) (PSI) MAX	MIN	SHEAR (PLI) MAX	MIN	SECTION (PLI) MAX	MIN
MT20	618	354	1667	822	2284	1656

PLATE PLACEMENT TOL. = 0.250 Inches

PLATE ROTATION TOL. = 5.0 Deg.

JSI GRIP= 0.90 (I) (INPUT = 0.90)
JSI METAL= 0.56 (I) (INPUT = 1.00)

A.14083635

JOB NAME	TRUSS NAME	QUANTITY	PLY	JOB DESC.	DRWG NO.
244676	P31	2	1	TRUSS DESC.	

Alpa Roof Truss, Maple

Version 7.500 S Oct 23 2013 MiTek Industries, Inc. Tue Aug 26 11:36:42 2014 Page 1

ID:o0wwtrWZe_90BmC?YOgW1cynpYC-yp?ql7vS6zCMm5J60THN1CE?rNr5BAsTVzH7H7yk?Zp

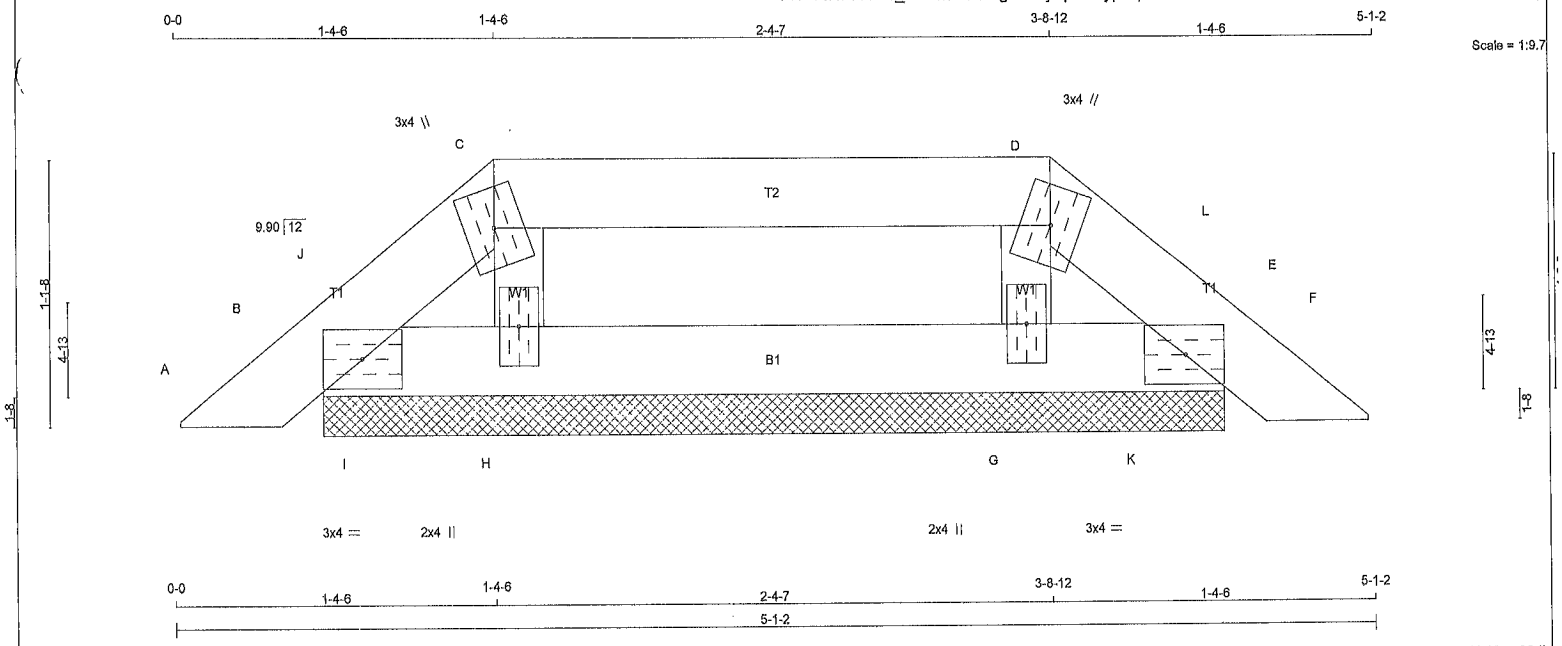

TOTAL WEIGHT = 2 X 12 = 23 lb

[M]

LUMBER

N. L. G. A. RULES

CHORDS	SIZE		LUMBER	DESCR.
A - C	2x4	DRY	No.2	SPF
C - D	2x4	DRY	No.2	SPF
D - F	2x4	DRY	No.2	SPF
B - E	2x4	DRY	No.2	SPF
ALL WEBS	2x3	DRY	No.2	SPF

DRY; SEASONED LUMBER.

ES (table is in inches)

	TYPE	PLATES	W	LEN	Y	X
B	TMB1-I	MT20	3.0	4.0		
C	TTW+m	MT20	3.0	4.0		
D	TTW+m	MT20	3.0	4.0		
E	TMB1-I	MT20	3.0	4.0		
G	BMW1+w	MT20	2.0	4.0		
H	BMW1+w	MT20	2.0	4.0		

DIMENSIONS, SUPPORTS AND LOADINGS SPECIFIED BY FABRICATOR TO BE VERIFIED BY BUILDING DESIGNER

BEARINGS

JT	FACTORED GROSS REACTION VERT	HORZ	MAXIMUM FACTORED GROSS REACTION DOWN	HORZ	UPLIFT	INPUT BRG IN-SX	REQRD BRG IN-SX
B	123	0	123	0	0	3-9-14	1-8
E	123	0	123	0	0	3-9-14	1-8
H	161	0	161	0	0	3-9-14	1-8
G	161	0	161	0	0	3-9-14	1-8

UNFACTORED REACTIONS

JT	1ST LCASE COMBINED	MAX./MIN. COMPONENT REACTIONS SNOW	LIVE	WIND	DEAD
B	83	75 / 0	0 / 0	0 / 0	8 / 0
E	83	75 / 0	0 / 0	0 / 0	8 / 0
H	140	66 / 0	40 / 0	0 / 0	34 / 0
G	140	66 / 0	40 / 0	0 / 0	34 / 0

BEARING MATERIAL TO BE SPF NO.2 OR BETTER AT JOINT(S) B, E, H, G

BRACING

TOP CHORD TO BE SHEATHED OR MAX. PURLIN SPACING = 6.25FT.
MAX. UNBRACED BOTTOM CHORD LENGTH = 10.00FT. OR RIGID CEILING DIRECTLY APPLIED.

LOADING

TOTAL LOAD CASES: (3)

CHORDS

MEMB. FR-TO	MAX. FACTORED FORCE (LBS)	FACTORED VERT. LOAD (PLF) FROM	TO	LC1 CSI (LC)	MAX UNBRAC LENGTH
A- B	0 / 14	-94.6	-94.6	0.02 (1)	10.00
B- J	-54 / 0	-94.6	-94.6	0.02 (1)	6.25
J- C	-35 / 0	-94.6	-94.6	0.01 (1)	6.25
C- D	-5 / 0	-94.6	-94.6	0.09 (1)	10.00
D- L	-35 / 0	-94.6	-94.6	0.01 (1)	6.25
L- E	-54 / 0	-94.6	-94.6	0.02 (1)	6.25
E- F	0 / 14	-94.6	-94.6	0.02 (1)	10.00
B- I	0 / 21	-28.0	-28.0	0.00 (1)	10.00
I- H	0 / 21	-28.0	-28.0	0.02 (2)	10.00
H- G	0 / 5	-28.0	-28.0	0.02 (2)	10.00
G- K	0 / 21	-28.0	-28.0	0.02 (2)	10.00
K- E	0 / 21	-28.0	-28.0	0.00 (1)	10.00

WEBS

MEMB.	MAX. FACTORED FORCE (LBS)	MAX CSI (LC)
H- C	-106 / 0	0.01 (1)
G- D	-106 / 0	0.01 (1)
I- J	-14 / 0	0.00 (1)
K- L	-14 / 0	0.00 (1)

LICENSED PROFESSIONAL ENGINEER
D. O'CONNOR
100009580
AUG 26 2014
PROVINCE OF ONTARIO

DESIGN CRITERIA

SPECIFIED LOADS:

TOP CH.	LL	=	29.0	PSF
	DL	=	3.0	PSF
BOT CH.	LL	=	10.5	PSF
	DL	=	7.0	PSF
TOTAL LOAD		=	49.5	PSF

SPACING = 24.0 IN. C/C

LOADING IN FLAT SECTION BASED ON A SLOPE OF 2.00/12 MINIMUM

THIS TRUSS IS DESIGNED FOR RESIDENTIAL OR SMALL BUILDING REQUIREMENTS OF PART 9, NBCC 2010

THIS DESIGN COMPLIES WITH:
- PART 9 OF OBC 2012 , BCBC 2012 , ABC 2012
- CSA 086-09
- TPIC 2011

DESIGN ASSUMPTIONS
-OVERHANG NOT TO BE ALTERED OR CUT OFF.

(55 % OF 37.6 P.S.F. G.S.L. PLUS
8.4 P.S.F. RAIN LOAD EQUALS
29.0 P.S.F. SPECIFIED ROOF LIVE LOAD

CSI: TC=0.09 (C-D:1) , BC=0.02 (G-K:2) , WB=0.01 (C-H:1) , SSI=0.09 (C-D:1)

DOL LUMBER=1.00 NAIL=1.00 LS BEND=1.10 COMP=1.10 SHEAR=1.10 TENS= 1.10

COMPANION LIVE LOAD FACTOR = 0.50

TRUSS PLATE MANUFACTURER IS NOT RESPONSIBLE FOR QUALITY CONTROL IN THE TRUSS MANUFACTURING PLANT .

NAIL VALUES

PLATE	GRIP(DRY) (PSI) MAX	MIN	SHEAR (PLI) MAX	MIN	SECTION (PLI) MAX	MIN
MT20	618	354	1667	822	2284	1656

PLATE PLACEMENT TOL. = 0.250 Inches

PLATE ROTATION TOL. = 5.0 Deg.

JSI GRIP= 0.22 (C) (INPUT = 0.90)
JSI METAL= 0.02 (E) (INPUT = 1.00)

A.40836036

JOB NAME	TRUSS NAME	QUANTITY	PLY	JOB DESC.	DRWG NO.
244676	P31A	3	1	TRUSS DESC.	

Alpa Roof Truss, Maple

Version 7.500 S Oct 23 2013 MiTek Industries, Inc. Tue Aug 26 11:36:43 2014 Page 1

ID:o0wwtrWZe_90BmC?YOgW1cynpYC-Q?YCyTw4tHKDOFulaBpcaQnB?nAWwdKckd1hpZyk?Zo

Scale = 1:14.6

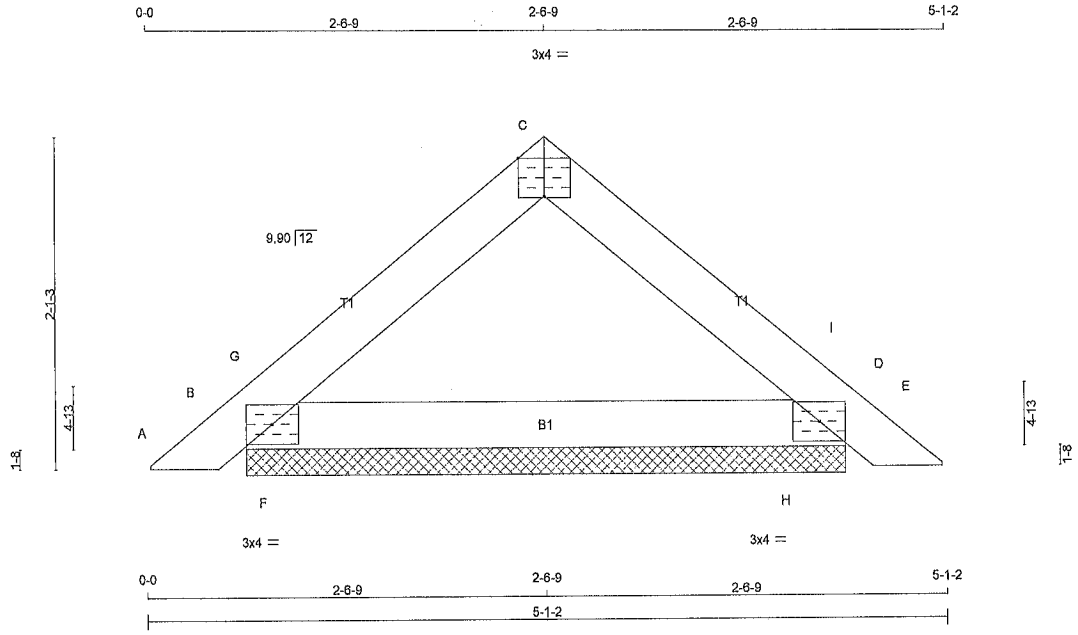

TOTAL WEIGHT = 3 X 12 = 36 lb

[M]

LUMBER

N. L. G. A. RULES

CHORDS	SIZE		LUMBER	DESCR.
A - C	2x4	DRY	No.2	SPF
C - E	2x4	DRY	No.2	SPF
B - D	2x4	DRY	No.2	SPF

DRY: SEASONED LUMBER.

PLATES (table is in inches)

	TYPE	PLATES	W	LEN	Y	X
	MB1-I	MT20	3.0	4.0		
C	TT-p	MT20	3.0	4.0	Edge	2.00
D	TMB1-I	MT20	3.0	4.0		

Edge - INDICATES REFERENCE CORNER OF PLATE TOUCHES EDGE OF CHORD.

DIMENSIONS, SUPPORTS AND LOADINGS SPECIFIED BY FABRICATOR TO BE VERIFIED BY BUILDING DESIGNER

BEARINGS

JT	FACTORED GROSS REACTION VERT	HORZ	MAXIMUM FACTORED GROSS REACTION DOWN	HORZ	UPLIFT	INPUT BRG IN-SX	REQRD BRG IN-SX
B	284	0	284	0	0	3-9-14	1-8
D	284	0	284	0	0	3-9-14	1-8

UNFACTORED REACTIONS

JT	1ST LCASE COMBINED	MAX./MIN. COMPONENT REACTIONS SNOW	LIVE	WIND	DEAD
B	223	142 / 0	40 / 0	0 / 0	41 / 0
D	223	142 / 0	40 / 0	0 / 0	41 / 0

BEARING MATERIAL TO BE SPF NO.2 OR BETTER AT JOINT(S) B, D

BRACING

TOP CHORD TO BE SHEATHED OR MAX. PURLIN SPACING = 6.25FT.
MAX. UNBRACED BOTTOM CHORD LENGTH = 10.00FT. OR RIGID CEILING DIRECTLY APPLIED.

LOADING

TOTAL LOAD CASES: (3)

CHORDS

MEMB. FR-TO	MAX. FACTORED FORCE (LBS)	FACTORED VERT. LOAD LC1 (PLF) FROM	TO	MAX CSI (LC)	MAX UNBRAC LENGTH
A- B	0 / 14	-94.6	-94.6	0.02 (1)	10.00
B- G	-241 / 0	-94.6	-94.6	0.06 (2)	6.25
G- C	-138 / 0	-94.6	-94.6	0.06 (1)	6.25
C- I	-138 / 0	-94.6	-94.6	0.06 (1)	6.25
I- D	-241 / 0	-94.6	-94.6	0.06 (2)	6.25
D- E	0 / 14	-94.6	-94.6	0.02 (1)	10.00
B- F	0 / 113	-28.0	-28.0	0.04 (2)	10.00
F- H	0 / 113	-28.0	-28.0	0.08 (2)	10.00
H- D	0 / 113	-28.0	-28.0	0.04 (2)	10.00

WEBS

MEMB. FR-TO	MAX. FACTORED FORCE (LBS)	MAX CSI (LC)
F- G	0 / 170	0.00 (1)
H- I	0 / 170	0.00 (1)

DESIGN CRITERIA

SPECIFIED LOADS:

TOP CH.	LL	=	29.0	PSF
	DL	=	3.0	PSF
BOT CH.	LL	=	10.5	PSF
	DL	=	7.0	PSF
TOTAL LOAD		=	49.5	PSF

SPACING = 24.0 IN. C/C

THIS TRUSS IS DESIGNED FOR RESIDENTIAL OR SMALL BUILDING REQUIREMENTS OF PART 9, NBCC 2010

THIS DESIGN COMPLIES WITH:
- PART 9 OF OBC 2012 , BCBC 2012 , ABC 2012
- CSA 086-09
- TPIC 2011

(55 % OF 37.6 P.S.F. G.S.L. PLUS 8.4 P.S.F. RAIN LOAD EQUALS 29.0 P.S.F. SPECIFIED ROOF LIVE LOAD

CSI: TC=0.06 (C-G:1) , BC=0.08 (F-H:2) , WB=0.00 (n/a:0) , SSI=0.09 (D-I:2)

DOL LUMBER=1.00 NAIL=1.00 LS BEND=1.10 COMP=1.10 SHEAR=1.10 TENS= 1.10

COMPANION LIVE LOAD FACTOR = 0.50

TRUSS PLATE MANUFACTURER IS NOT RESPONSIBLE FOR QUALITY CONTROL IN THE TRUSS MANUFACTURING PLANT .

NAIL VALUES

PLATE	GRIP(DRY) (PSI) MAX	MIN	SHEAR (PLI) MAX	MIN	SECTION (PLI) MAX	MIN
MT20	618	354	1667	822	2284	1656

PLATE PLACEMENT TOL. = 0.250 inches

PLATE ROTATION TOL. = 5.0 Deg.

JSI GRIP= 0.24 (B) (INPUT = 0.90)
JSI METAL= 0.06 (D) (INPUT = 1.00)

LICENSED PROFESSIONAL ENGINEER
D. O'CONNOR
100009580
AUG 26/2014
PROVINCE OF ONTARIO

A.14083637

STRACON ENGINEERING INC.

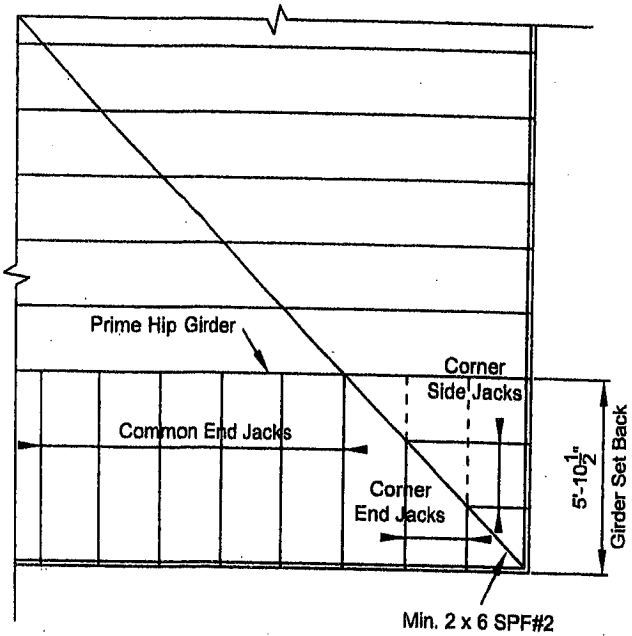

45° Hip End

LUMBER SPECIFICATION

TOP CHORD	:	2 x 4 SPF#2
BOTTOM CHORD	:	2 x 4 SPF#2
WEBS	:	2 x 3 SPF#2

UNLESS OTHERWISE SHOWN

DESIGN LOAD

TOP CHORD SNOW LOAD	:	40.5	P.S.F.
TOP CHORD DEAD LOAD	:	3.0	P.S.F.
BOTTOM CHORD LIVE LOAD	:	0.0	P.S.F.
BOTTOM CHORD DEAD LOAD	:	7.0	P.S.F.
TOTAL LOAD	:	50.5	P.S.F

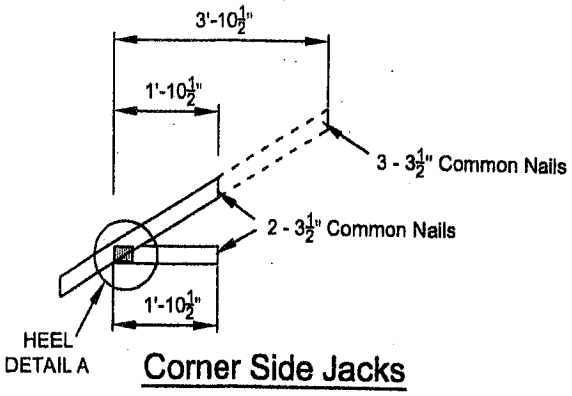

Corner Side Jacks

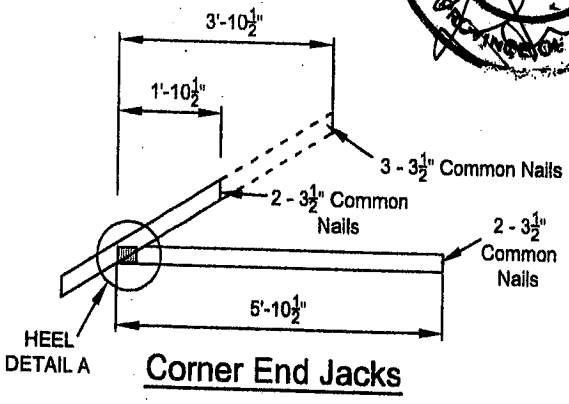

Corner End Jacks

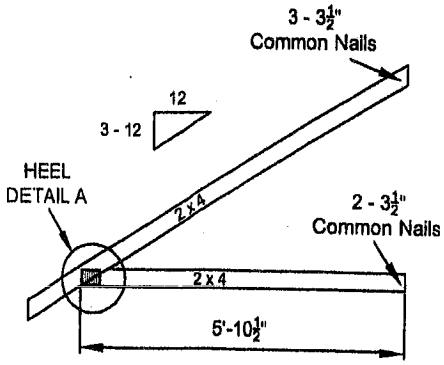

Common End Jacks

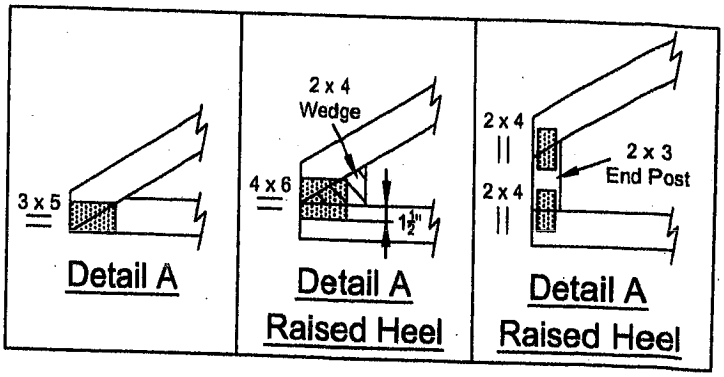

NOTE: DESIGN CONFORMS TO PART 9, O.B.C. 2012 (L.S.D. DESIGN)

CS-51008

TECHNICAL BULLETIN

HUS/LJS – Double Shear Joist Hangers

SIMPSON Strong-Tie®

All hangers have double shear nailing. This patented innovation distributes the load through two points on each joist nail for greater strength. It also allows the use of fewer nails, faster installation and the use of common nails for all connections. Do not bend or remove tabs.

MATERIAL: See table

FINISH: G90 galvanized

DESIGN:

- Factored resistances are in accordance with CSA O86-14
- Uplift resistances have been increased 15% No further increase is permitted
- Wood shear is not considered in the factored resistances given. The specifier must ensure that the joist and header capacities are capable of withstanding these loads.

INSTALLATION:

- Use all specified fasteners
- Nails: 16d = 0.162" dia. x 3½" long common wire
- Double shear nails must be driven at an angle through the joist or truss into the header to achieve the table loads
- Not designed for welded or nailer applications

OPTIONS:

- See current catalogue for options

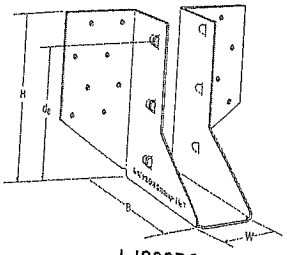

LJS26DS

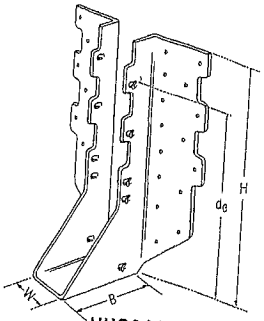

HUS210
(HUS26, HUS28, similar)

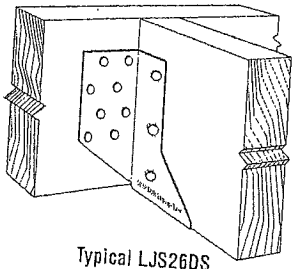

Typical LJS26DS Installation

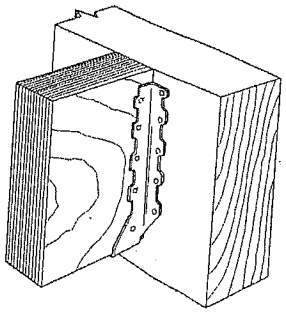

Typical HUS Installation

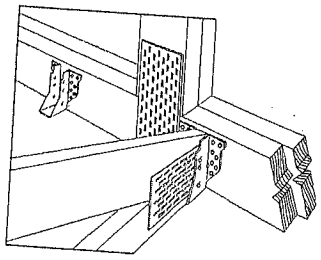

Typical HUS Installation
(Truss Designer to provide fastener quantity for connecting multiple members together)

Model No.	Ga	Dimensions (in)				Fasteners		Factored Resistance (lbs)			
								D.Fir-L		S-P-F	
		W	H	B	d_e[1]	Face	Joist	Uplift (K_D=1.15)	Normal (K_D=1.00)	Uplift (K_D=1.15)	Normal (K_D=1.00)
LJS26DS	18	1 9/16	5	3½	4⅝	16-16d	6-16d	2055	4265	1460	4115
HUS26	16	1⅝	5⅜	3	3 15/16	14-16d	6-16d	2705	4940	2065	3875
HUS28	16	1⅝	7 3/32	3	6 3/32	22-16d	8-16d	3605	5365	2675	4345
HUS210	16	1⅝	9 3/32	3	7 31/32	30-16d	10-16d	4505	5795	4010	4740
HUS1.81/10	16	1 13/16	9	3	8	30-16d	10-16d	4505	6450	4010	5200

1. d_e is the distance from the seat of the hanger to the highest joist nail.

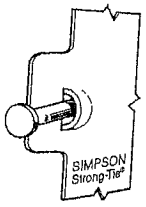

Dome Double Shear Nailing prevents tabs breaking off (available on some models).

U.S. Patent 5,603,580

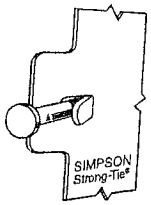

Double Shear Nailing Side View. Do not bend tab back.

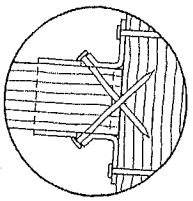

Double Shear Nailing Top View.

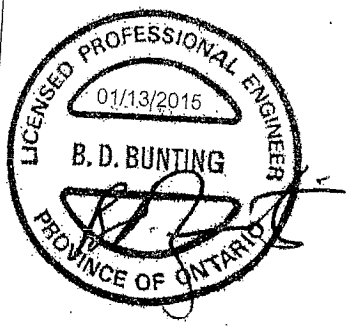

LIMIT STATES DESIGN

This technical bulletin is effective until December 31, 2016, and replaces information available as of January 1, 2015. This information is updated periodically and should not be relied upon after December 31, 2016. Contact Simpson Strong-Tie for current information and limited warranty at www.strongtie.com.
©2014 Simpson Strong-Tie Company Inc.

800-999-5099
www.strongtie.com

TECHNICAL BULLETIN

HHUS – Double Shear Joist Hangers

SIMPSON Strong-Tie®

All HHUS hangers have double shear nailing. This patented innovation distributes the load through two points on each joist nail for greater strength. It also allows the use of fewer nails, faster installation and the use of common nails for all connections. Do not bend or remove tabs.

MATERIAL: 14 gauge

FINISH: G90 galvanized

DESIGN:

- Factored resistances are in accordance with CSA O86-14
- Uplift resistances have been increased 15%. No further increase is permitted.
- Wood shear is not considered in the factored resistances given. The specifier must ensure that the joist and header capacities are capable of withstanding these loads.

INSTALLATION:

- Use all specified fasteners
- Nails: 16d = 0.162" dia. x 3½" long common wire
- Double shear nails must be driven at an angle through the joist or truss into the header to achieve the table loads
- Not designed for welded or nailer applications

OPTIONS:

- See current catalogue for options

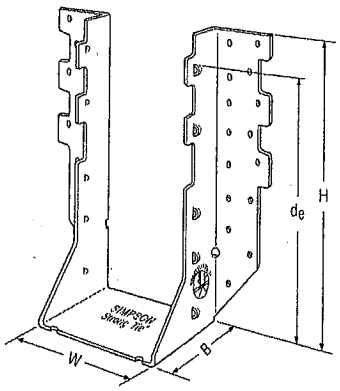

HHUS410

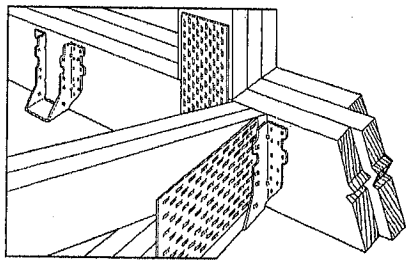

Typical HHUS Installation (Truss Designer to provide fastener quantity for connecting multiple members together)

Model No.	Ga	Dimensions (in)				Fasteners		Factored Resistance (lbs)			
								D.Fir-L		S-P-F	
		W	H	B	d_e[1]	Face	Joist	Uplift (K_D=1.15)	Normal (K_D=1.00)	Uplift (K_D=1.15)	Normal (K_D=1.00)
HHUS26-2	14	3 5/16	5 13/16	3	3 15/16	14-16d	6-16d	2850	7335	2065	5205
HHUS28-2	14	3 5/16	7 7/32	3	6 5/32	22-16d	8-16d	3765	8940	2675	6345
HHUS210-2	14	3 5/16	9 3/32	3	8	30-16d	10-16d	4745	9660	4310	7000
HHUS210-3	14	4 11/16	9	3	7 15/16	30-16d	10-16d	4745	10545	4310	7485
HHUS210-4	14	6 1/8	8 29/32	3	7 27/32	30-16d	10-16d	4745	10545	4310	7485
HHUS46	14	3 5/8	5 13/32	3	3 15/16	14-16d	6-16d	2540	7335	2065	5205
HHUS48	14	3 5/8	7 1/8	3	6 1/8	22-16d	8-16d	3765	8945	2675	6345
HHUS410	14	3 5/8	9	3	8	30-16d	10-16d	4745	9855	4310	7000
HHUS5.50/10	14	5 1/2	9	3	8	30-16d	10-16d	4745	10545	4310	7485
HHUS7.25/10	14	7 1/4	9	3 5/16	7 29/32	30-16d	10-16d	4745	10770	4310	7650

1. d_e is the distance from the seat of the hanger to the highest joist nail.

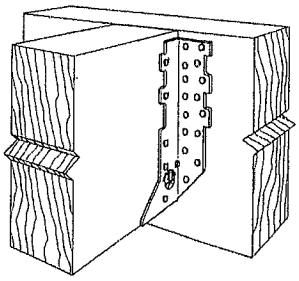

Typical HHUS Installation

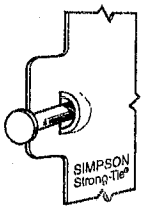

Dome Double Shear Nailing prevents tabs breaking off (available on some models).

U.S. Patent 5,603,580

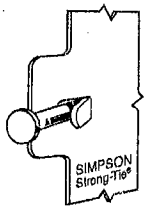

Double Shear Nailing Side View. Do not bend tab back.

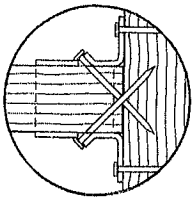

Double Shear Nailing Top View.

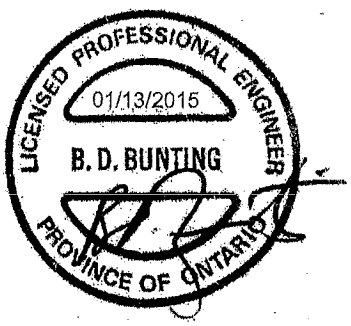

This Technical Bulletin is a simple reproduction of the original document issued by Simpson Strong-Tie Canada Ltd. on January 1, 2010. Simpson Strong-Tie Canada Ltd. has not reviewed this document for accuracy or completeness since the date of its original issue. Simpson Strong-Tie Canada Ltd. makes no representations or warranties of any kind, express or implied, with respect to the information contained in this Technical Bulletin.

800-999-5099
www.strongtie.com