ASPHALT SHINGLES
12"FINISH O.H.
R.T.M.C
2X6 EXTERIOR WALLS
2X6 FASCIA BOARD

HARDWARE:

THGQ3-SDS4.5 (MAX)- (S)
HGUS26-2 -(XX)
LJS26DS -(V)
LUS24 -(0)

DENOTES:

H2 -12" HIGHER PLATE

H -12" RAISED CEILING

DESIGN CONFORMS WITH OBC 2012(2019 AMENDMENT)
OCCUPANCY: RESIDENTIAL | PART: 9
Ss = 54.3 psf | Sr = 8.4 psf

DESIGN LOADS:
TCSL = 38.3 psf
TCDL = 6.0 psf
BCLL = 0.0 psf
BCDL = 7.4 psf

DENOTES: CONVENTIONAL FRAMING

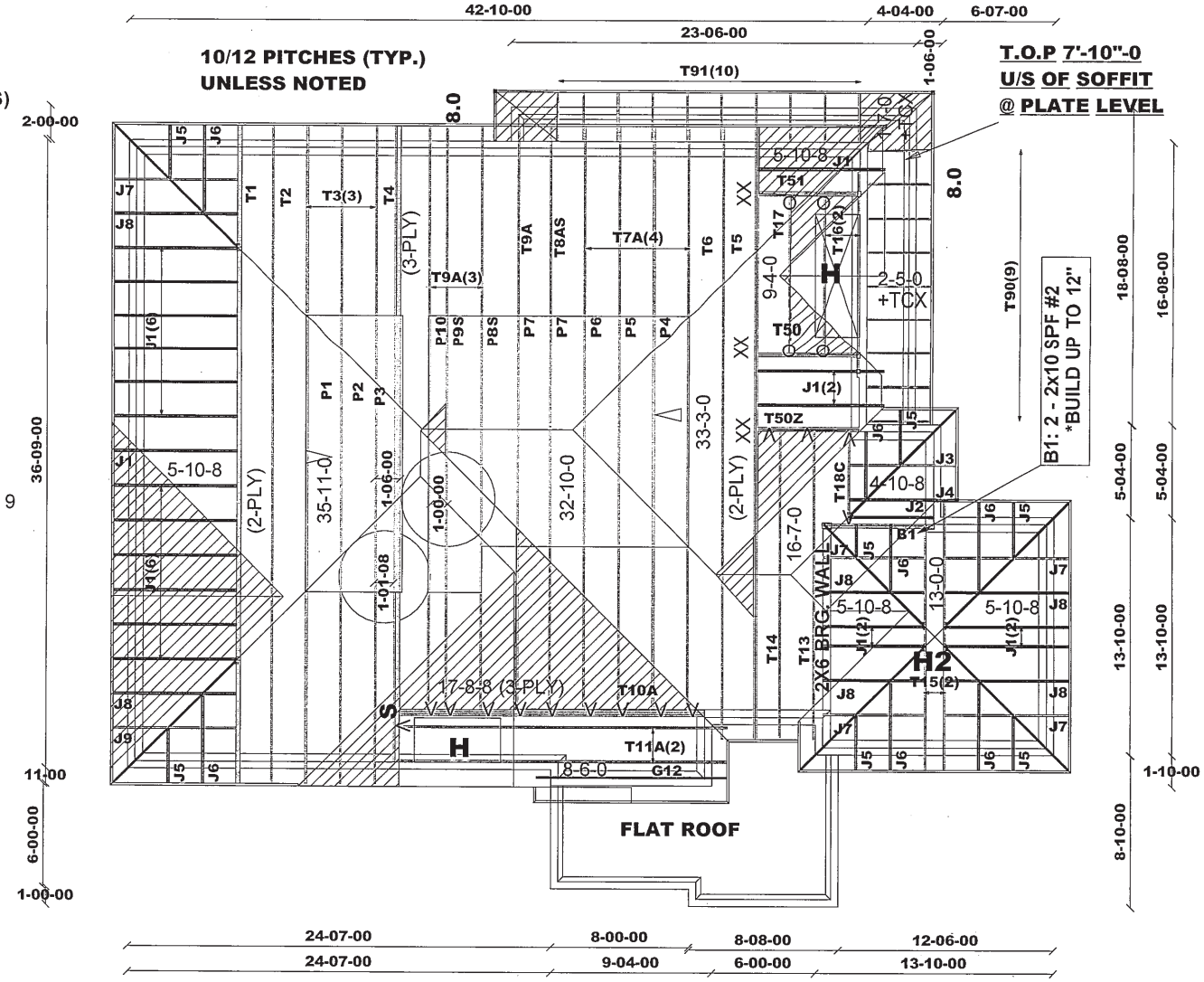

All conventional framing to conform with Part 9 of O.B.C. 2012. Roof rafters that cross over or meet trusses to be min. 2x4 SPF #2 @ 24" o/c with a vertical post to the truss at each cross point. Vertical posts longer than 6' to have lateral bracing so that the distance between the post end points and lateral bracing does not exceed 6'.

M11047

TAMARACK ROOF TRUSSES INC.	Job Track: 50469	Builder / Location: BAYVIEW WELLINGTON / INNISFIL	Model / Elevation: S45-4C HUMMINGBIRD 4 / A
	Plan Log: 204710	Project: ALCONA SHORES	
	Layout ID: 418649	Date: 11/14/23 Sales: Rick DiCiano Designer: SV/JXT	

Mitek ver 8.6.3.353

ASPHALT SHINGLES
12"FINISH O.H.
R.T.M.C
2X6 EXTERIOR WALLS
2X6 FASCIA BOARD

HARDWARE:

THGQ3-SDS4.5 (MAX)- (S)
HGUS26-2 -(XX)
LJS26DS -(V)
LUS24 -(0)

DENOTES:

H2 -12" HIGHER PLATE

H -12" RAISED CEILING

DESIGN CONFORMS WITH OBC 2012(2019 AMENDMENT)
OCCUPANCY: RESIDENTIAL | PART: 9
Ss = 54.3 psf | Sr = 8.4 psf

DESIGN LOADS:
TCSL = 38.3 psf
TCDL = 6.0 psf
BCLL = 0.0 psf
BCDL = 7.4 psf

DENOTES: CONVENTIONAL FRAMING

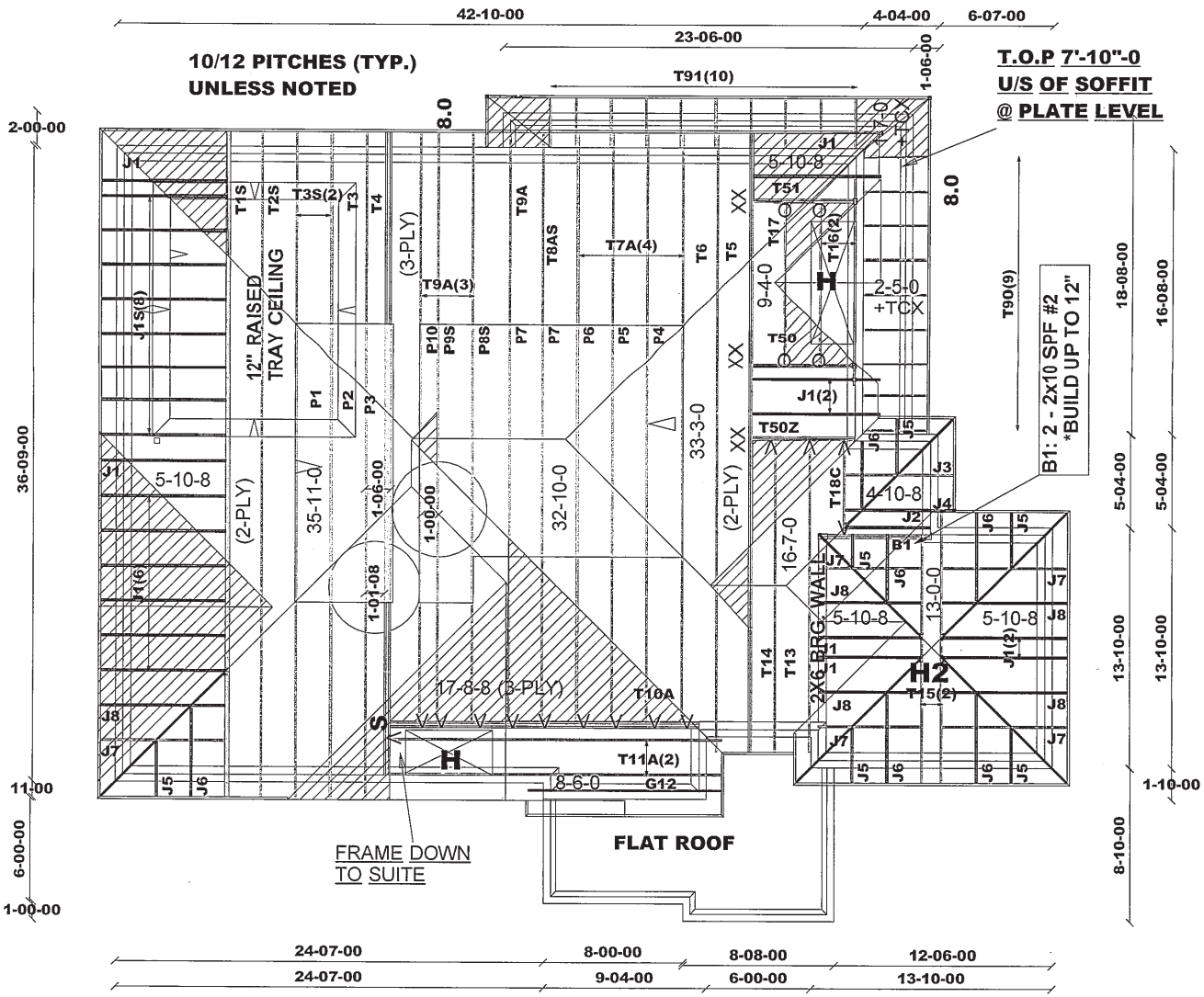

All conventional framing to conform with Part 9 of O.B.C. 2012. Roof rafters that cross over or meet trusses to be min. 2x4 SPF #2 @ 24" o/c with a vertical post to the truss at each cross point. Vertical posts longer than 6' to have lateral bracing so that the distance between the post end points and lateral bracing does not exceed 6'.

M11047

TAMARACK ROOF TRUSSES INC.	Job Track: 50469	Builder / Location: BAYVIEW WELLINGTON / INNISFIL	Model / Elevation: S45-4C HUMMINGBIRD 4 / A OPT COFF
	Plan Log: 204710	Project: ALCONA SHORES	THESE DRAWINGS CONSTITUTE THE PROPERTY OF TAMARACK ROOF TRUSSES INC., SHALL NOT BE REPRODUCED, PUBLISHED, OR REDISTRIBUTED IN ANY MANNER OR UTILIZED FOR ANY PURPOSE OTHER THAN THE MANUFACTURE OF TRUSSES BY TAMARACK ROOF TRUSSES INC AND WILL BE RETRACTED BY TAMARACK ROOF TRUSSES INC IF UTLILZED FOR ANY OTHER PURPOSE.
	Layout ID: 418650	Date: 11/14/23 Sales: Rick DiCiano Designer: SV/JXT	Mitek ver 8.6.3.353

ASPHALT SHINGLES
12"FINISH O.H.
R.T.M.C
2X6 EXTERIOR WALLS
2X6 FASCIA BOARD

HARDWARE:

HGUS26-2 -(XX)
LJS26DS -(V)
LUS24 -(0)

DENOTES:

H2 -12" HIGHER PLATE

DESIGN CONFORMS WITH OBC 2012(2019 AMENDMENT)
OCCUPANCY: RESIDENTIAL | PART: 9
Ss = 54.3 psf | Sr = 8.4 psf

DESIGN LOADS:
TCSL = 38.3 psf
TCDL = 6.0 psf
BCLL = 0.0 psf
BCDL = 7.4 psf

DENOTES:
CONVENTIONAL FRAMING

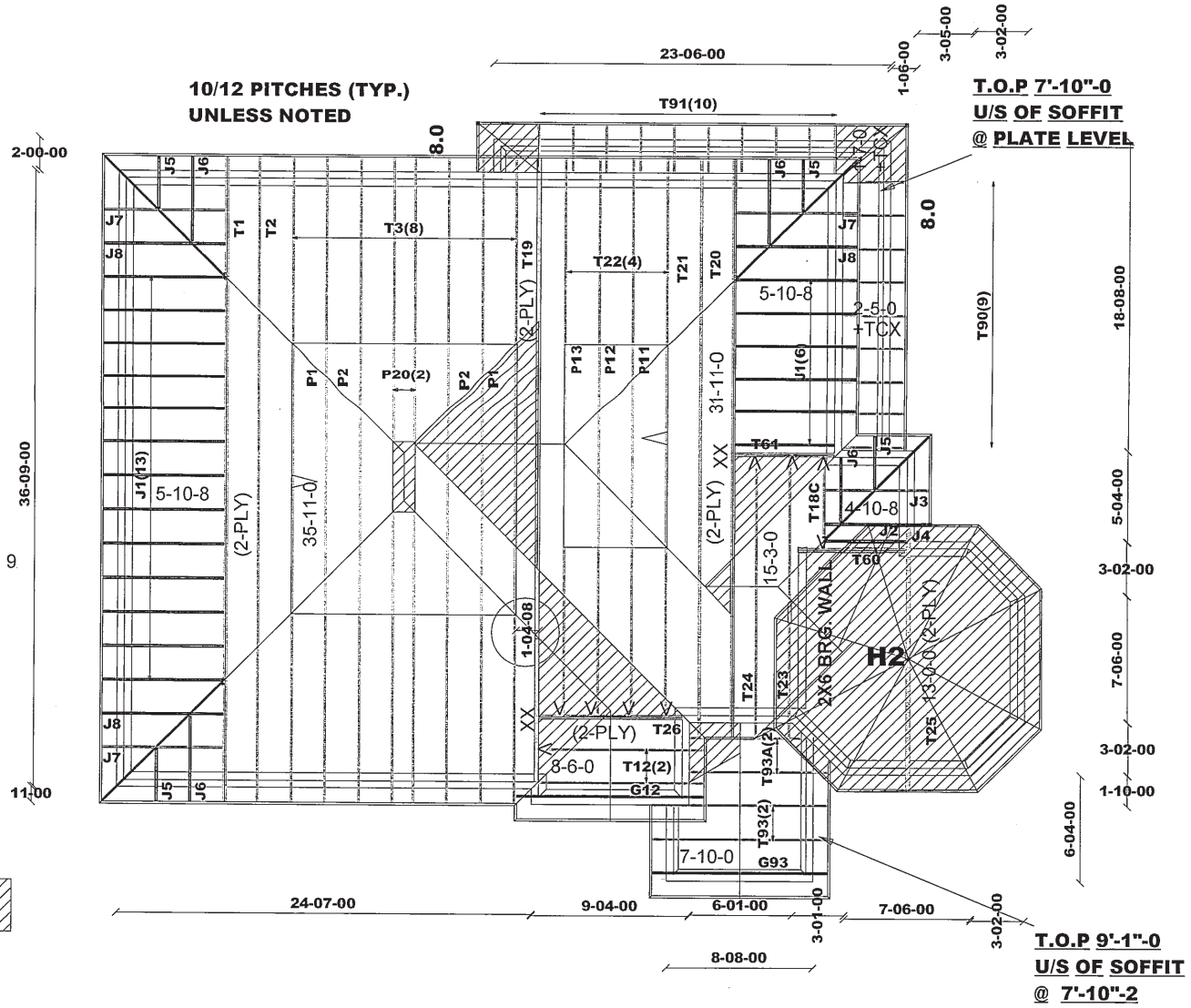

All conventional framing to conform with Part 9 of O.B.C. 2012. Roof rafters that cross over or meet trusses to be min. 2x4 SPF #2 @ 24" o/c with a vertical post to the truss at each cross point. Vertical posts longer than 6' to have lateral bracing so that the distance between the post end points and lateral bracing does not exceed 6'.

M11047

TAMARACK ROOF TRUSSES INC.	Job Track: 50469	Builder / Location: BAYVIEW WELLINGTON / INNISFIL	Model / Elevation: S45-4C HUMMINGBIRD 4 / B
	Plan Log: 204710	Project: ALCONA SHORES	
	Layout ID: 418651	Date: 11/14/23 Sales: Rick DiCiano Designer: SV/JXT	

Mitek ver 8.6.3.353

ASPHALT SHINGLES
12"FINISH O.H.
R.T.M.C
2X6 EXTERIOR WALLS
2X6 FASCIA BOARD

HARDWARE:

HGUS26-2 -(XX)
LJS26DS -(V)
LUS24 -(0)

DENOTES:

H2 -12" HIGHER PLATE

DESIGN CONFORMS WITH OBC 2012(2019 AMENDMENT)
OCCUPANCY: RESIDENTIAL | PART: 9
Ss = 54.3 psf | Sr = 8.4 psf

DESIGN LOADS:
TCSL = 38.3 psf
TCDL = 6.0 psf
BCLL = 0.0 psf
BCDL = 7.4 psf

DENOTES:
CONVENTIONAL FRAMING

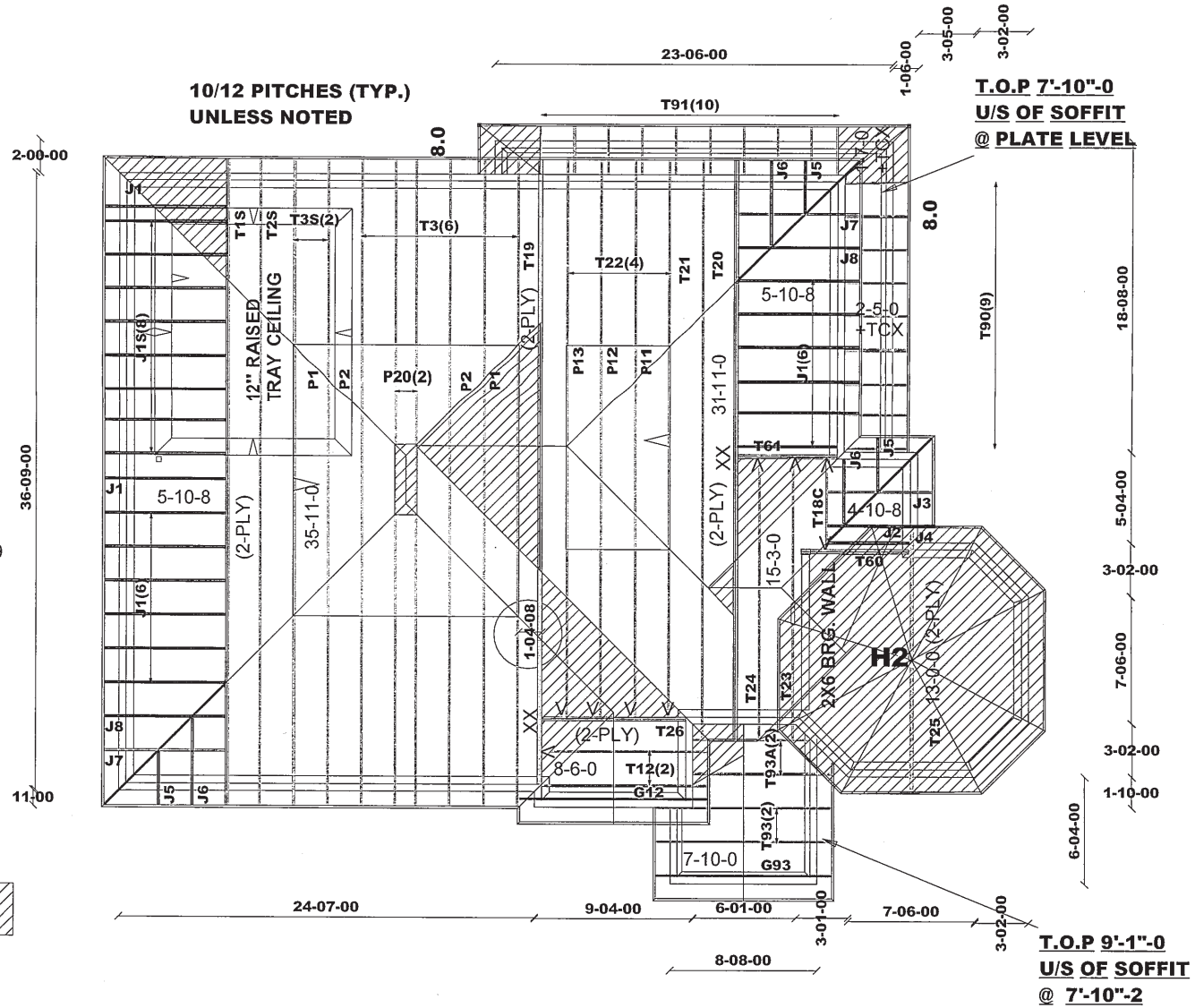

All conventional framing to conform with Part 9 of O.B.C. 2012. Roof rafters that cross over or meet trusses to be min. 2x4 SPF #2 @ 24" o/c with a vertical post to the truss at each cross point. Vertical posts longer than 6' to have lateral bracing so that the distance between the post end points and lateral bracing does not exceed 6'.

M11047

TAMARACK ROOF TRUSSES INC.	Job Track: 50469	Builder / Location: BAYVIEW WELLINGTON / INNISFIL	Model / Elevation: S45-4C HUMMINGBIRD 4 / B OPT COFF
	Plan Log: 204710	Project: ALCONA SHORES	THESE DRAWINGS CONSTITUTE THE PROPERTY OF TAMARACK ROOF TRUSSES INC., SHALL NOT BE REPRODUCED, PUBLISHED, OR REDISTRIBUTED IN ANY MANNER OR UTILIZED FOR ANY PURPOSE OTHER THAN THE MANUFACTURE OF TRUSSES BY TAMARACK ROOF TRUSSES INC AND WILL BE RETRACTED BY TAMARACK ROOF TRUSSES INC IF UTLILZED FOR ANY OTHER PURPOSE.
	Layout ID: 418652	Date: 11/14/23 Sales: Rick DiCiano Designer: SV/JXT	Mitek ver 8.6.3.353

DELIVERY SHIPLIST

TAMARACK ROOF TRUSSES INC.
ALPA LUMBER GROUP

Lumber Yard:	TAMARACK LUMBER	Job Track:	50469
Builder:	BAYVIEW WELLINGTON	PlanLog:	204710
Project:	ALCONA SHORES	Layout ID:	418649
Location:	INNISFIL	Ref #	
Model:	S45-4C HUMMINGBIRD 4	Page:	1 of 4
Lot #:		Date:	11/14/2023
Elevation:	A	Designer:	
		Sales Rep:	Rick DiCiano

Roof Trusses

PROFILE	QTY PLY	MARK TYPE	PITCH	SPAN	HEIGHT	LUMBER	OVERHANG LEFT RIGHT	HEEL HEIGHT LEFT RIGHT	LBS. BFT.	BUNDLE # STACK #	LOAD BY REMARKS
	1 2-ply	T1 Hip Girder	10 /12	**35-11-00**	6-06-13	2 x 6	1-03-08 1-03-08	1-07-11 1-07-11	453.91 266.67		
	1	T2 Hip	10 /12	**35-11-00**	8-02-07	2 x 4	1-03-08 1-03-08	1-07-11 1-07-11	179.61 112.33		
	3	T3 Hip	10 /12	**35-11-00**	9-10-07	2 x 4	1-03-08 1-03-08	1-07-11 1-07-11	576.47 361.00		
	1 3-ply	T4 Piggyback Base Girder	10 /12	**35-11-00**	9-10-13	2 x 6	1-03-08 1-03-08	1-07-11 1-07-11	972.14 581.00		
	1 2-ply	T5 Hip Girder	10 /12	**33-03-00**	6-06-13	2 x 6	1-03-08 1-03-08	1-07-11 1-07-11	430.61 254.67		
	1	T6 Hip	10 /12	**33-03-00**	8-02-07	2 x 4	1-03-08 1-03-08	1-07-11 1-07-11	161.06 102.00		
	4	T7A Hip	10 /12	**32-10-00**	9-10-07	2 x 4	1-03-08	1-07-11 1-11-14	661.64 416.00		
	1	T8AS Piggyback Base	10 /12	**32-10-00**	9-10-07	2 x 4	1-03-08	1-07-11 4-02-08	199.57 125.17		
	4	T9A Piggyback Base	10 /12	**32-10-00**	9-10-07	2 x 4	1-03-08	1-07-11 4-02-08	761.34 474.67		
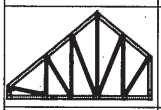	1 3-ply	T10A Common Girder	10 /12	**17-08-08**	10-10-08	2 x 6		1-07-11 5-04-04	459.52 278.00		
	2	T11A Roof Special	10 /12	**17-08-08**	10-10-08	2 x 4	1-03-08	1-07-11 4-04-04	228.51 148.00		
	1	G12 GABLE	10 /12	**8-06-00**	5-02-03	2 x 4	1-03-08 1-03-08	1-07-11 1-07-11	41.52 27.83		
	1	T13 Hip	10 /12	**16-07-00**	7-04-07	2 x 4	1-03-08 1-03-08	1-07-11 1-07-11	83.14 52.67		
	1	T14 Common	10 /12	**16-07-00**	8-06-10	2 x 4	1-03-08 1-03-08	1-07-11 1-07-11	81.59 51.33		

DELIVERY SHIPLIST

TAMARACK ROOF TRUSSES INC.
ALPA LUMBER GROUP

Lumber Yard:	TAMARACK LUMBER	Job Track:	50469
Builder:	BAYVIEW WELLINGTON	PlanLog:	204710
Project:	ALCONA SHORES	Layout ID:	418649
Location:	INNISFIL	Ref #	
Model:	S45-4C HUMMINGBIRD 4	Page:	2 of 4
Lot #:		Date:	11/14/2023
Elevation:	A	Designer:	
		Sales Rep:	Rick DiCiano

Roof Trusses

PROFILE	QTY PLY	MARK TYPE	PITCH	SPAN	HEIGHT	LUMBER	OVERHANG LEFT RIGHT	HEEL HEIGHT LEFT RIGHT	LBS. BFT.	BUNDLE # STACK #	LOAD BY REMARKS
	2	T15 Hip Girder	10 /12	**13-00-00**	6-06-07	2 x 4	1-03-08 1-03-08	1-07-11 1-07-11	130.92 84.00		
	2	T16 Roof Special	10 /12	**9-04-00**	5-06-06	2 x 4	1-03-08 1-03-08	1-07-11 1-07-11	106.14 72.00		
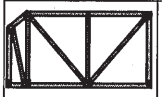	1	T17 Half Hip	10 /12	**9-04-00**	4-11-11	2 x 4		3-11-03 4-11-11	50.53 33.00		
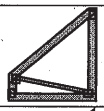	1	T18C Half Hip Girder	10 /12	**5-04-00**	5-08-07	2 x 6		1-07-11 5-08-07	36.67 23.50		
	1 2-ply	T50 Jack-Closed Girder	10 /12	**5-10-08**	6-06-07	2 x 4 2 x 6		1-07-11 6-06-07	72.89 46.67		
	1 2-ply	T50Z Jack-Closed Girder	10 /12	**5-10-08**	6-06-07	2 x 4 2 x 6		1-07-11 6-06-07	72.89 46.67		
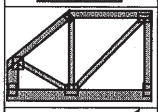	1 2-ply	T51 Half Hip Girder	10 /12	**5-10-08**	3-08-11	2 x 4 2 x 6		1-07-11 3-08-11	63.18 41.67		
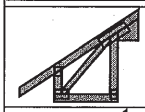	9	T90 Monopitch	8 /12	**2-05-00**	3-06-05	2 x 4	1-03-08	1-04-13 3-00-02	159.85 106.50		
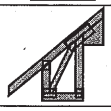	10	T91 Monopitch	10 /12	**1-07-00**	3-07-04	2 x 4	1-03-08	1-07-11 2-11-08	165.24 128.33		
	1	P1 Piggyback	10 /12	**16-02-00**	1-08-00	2 x 4			48.62 30.17		
	1	P2 Piggyback	10 /12	**16-02-00**	3-04-00	2 x 4			52.02 33.50		
	1 3-ply	P3 Piggyback	10 /12	**16-02-00**	4-03-04	2 x 4			150.15 92.50		
	1	P4 Piggyback	10 /12	**13-06-00**	1-08-00	2 x 4			40.4 25.83		
	1	P5 Piggyback	10 /12	**13-06-00**	3-04-00	2 x 4			40.99 26.67		

DELIVERY SHIPLIST

TAMARACK ROOF TRUSSES INC.
ALPA LUMBER GROUP

Lumber Yard:	TAMARACK LUMBER	Job Track:	50469
Builder:	BAYVIEW WELLINGTON	PlanLog:	204710
Project:	ALCONA SHORES	Layout ID:	418649
Location:	INNISFIL	Ref #	
Model:	S45-4C HUMMINGBIRD 4	Page:	3 of 4
Lot #:		Date:	11/14/2023
Elevation:	A	Designer:	
		Sales Rep:	Rick DiCiano

Roof Trusses

PROFILE	QTY PLY	MARK TYPE	PITCH	SPAN	HEIGHT	LUMBER	OVERHANG LEFT RIGHT	HEEL HEIGHT LEFT RIGHT	LBS. BFT.	BUNDLE # STACK #	LOAD BY REMARKS
	1	P6 Piggyback	10 /12	**13-06-00**	5-00-00	2 x 4			44.02 28.17		
	2	P7 Piggyback	10 /12	**13-06-00**	5-07-08	2 x 4			87.91 54.33		
	1	P8S Piggyback	10 /12	**16-02-00**	5-07-08	2 x 4			55.86 34.67		
	1	P9S Piggyback	10 /12	**16-02-00**	5-07-08	2 x 4			59.46 37.67		
	1	P10 Piggyback	10 /12	**16-02-00**	5-00-13	2 x 4			51.27 31.33		
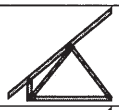	20	J1 Jack-Open	10 /12	**5-10-08**	6-06-07	2 x 4	1-03-08	1-07-11 6-06-07	525.16 340.00		
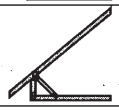	1	J2 Jack-Open	10 /12	**4-10-08**	5-08-07	2 x 4	1-03-08	1-07-11 5-08-07	17.85 11.67		
	1	J3 Jack-Open Girder	10 /12	**4-10-08**	3-01-09	2 x 4	1-03-08	1-07-11 5-08-07	13.27 9.00		
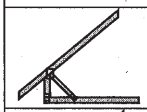	1	J4 Jack-Open	10 /12	**4-10-08**	4-09-09	2 x 4	1-03-08	1-07-11 5-08-07	16.23 10.33		
	7	J5 Jack-Open	10 /12	**1-10-08**	3-01-09	2 x 4	1-03-08	1-07-11 3-02-07	68.92 49.00		
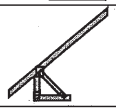	7	J6 Jack-Open	10 /12	**1-10-08**	4-09-09	2 x 4	1-03-08 1-10-15	1-07-11 3-02-07	89.7 58.33		
	5	J7 Jack-Open Girder	10 /12	**5-10-08**	3-01-09	2 x 4	1-03-08	1-07-11 6-06-07	72.03 48.33		
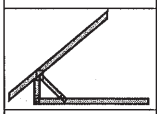	6	J8 Jack-Open	10 /12	**5-10-08**	4-09-09	2 x 4	1-03-08	1-07-11 6-06-07	104.25 66.00		
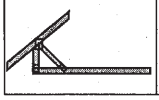	1	J9 Jack-Open Girder	10 /12	**5-10-08**	3-01-09	2 x 4	1-03-08	1-07-11 6-06-07	14.41 9.67		

DELIVERY SHIPLIST

Lumber Yard:	TAMARACK LUMBER	Job Track:	50469
Builder:	BAYVIEW WELLINGTON	PlanLog:	204710
Project:	ALCONA SHORES	Layout ID:	418649
Location:	INNISFIL	Ref #	
Model:	S45-4C HUMMINGBIRD 4	Page:	4 of 4
Lot #:		Date:	11/14/2023
Elevation:	A	Designer:	
		Sales Rep:	Rick DiCiano

Roof Trusses

PROFILE	QTY / PLY	MARK / TYPE	PITCH	SPAN	HEIGHT	LUMBER	OVERHANG LEFT RIGHT	HEEL HEIGHT LEFT RIGHT	LBS. / BFT.	BUNDLE # / STACK #	LOAD BY / REMARKS

TOTAL # TRUSS= **122** TOTAL BFT OF ALL TRUSSES= **4830.85** BFT. TOTAL WEIGHT OF ALL TRSSES **7701.45** LBS

HARDWARE

QTY	TYPE	MODEL	LENGTH
2	Hardware	CP3-6	
3	Hardware	HGUS26-2	
12	Hardware	LJS26DS	
6	Hardware	LUS24	
1	Hardware	THGQ3-SDS4.5MAX	

TOTAL NUMBER OF ITEMS= **24**

DELIVERY SHIPLIST

TAMARACK ROOF TRUSSES INC.
ALPA LUMBER GROUP

Lumber Yard:	TAMARACK LUMBER	Job Track:	50469
Builder:	BAYVIEW WELLINGTON	PlanLog:	204710
Project:	ALCONA SHORES	Layout ID:	418650
Location:	INNISFIL	Ref #	
Model:	S45-4C HUMMINGBIRD 4	Page:	1 of 4
Lot #:		Date:	11/14/2023
Elevation:	A OPT COFF	Designer:	
		Sales Rep:	Rick DiCiano

Roof Trusses

PROFILE	QTY PLY	MARK TYPE	PITCH	SPAN	HEIGHT	LUMBER	OVERHANG LEFT RIGHT	HEEL HEIGHT LEFT RIGHT	LBS. BFT.	BUNDLE # STACK #	LOAD BY REMARKS
	1 2-ply	T1S Hip Girder	10 /12 12 /12	**35-11-00**	6-06-13	2 x 6	1-03-08 1-03-08	1-07-11 1-07-11	484.61 292.67		
	1	T2S Hip	10 /12 12 /12	**35-11-00**	8-02-07	2 x 4	1-03-08 1-03-08	1-07-11 1-07-11	186.72 119.33		
	1	T3 Piggyback Base	10 /12	**35-11-00**	9-10-07	2 x 4	1-03-08 1-03-08	1-07-11 1-07-11	192.16 120.33		
	2	T3S Hip	10 /12 12 /12	**35-11-00**	9-10-07	2 x 4	1-03-08 1-03-08	1-07-11 1-07-11	404.82 259.33		
	1 3-ply	T4 Piggyback Base Girder	10 /12	**35-11-00**	9-10-13	2 x 6	1-03-08 1-03-08	1-07-11 1-07-11	972.14 581.00		
	1 2-ply	T5 Hip Girder	10 /12	**33-03-00**	6-06-13	2 x 6	1-03-08 1-03-08	1-07-11 1-07-11	430.61 254.67		
	1	T6 Hip	10 /12	**33-03-00**	8-02-07	2 x 4	1-03-08 1-03-08	1-07-11 1-07-11	161.06 102.00		
	4	T7A Hip	10 /12	**32-10-00**	9-10-07	2 x 4	1-03-08	1-07-11 1-11-14	661.64 416.00		
	1	T8AS Piggyback Base	10 /12	**32-10-00**	9-10-07	2 x 4	1-03-08	1-07-11 4-02-08	199.57 125.17		
	4	T9A Piggyback Base	10 /12	**32-10-00**	9-10-07	2 x 4	1-03-08	1-07-11 4-02-08	761.34 474.67		
	1 3-ply	T10A Common Girder	10 /12	**17-08-08**	10-10-08	2 x 6		1-07-11 5-04-04	459.52 278.00		
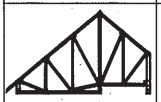	2	T11A Roof Special	10 /12	**17-08-08**	10-10-08	2 x 4	1-03-08	1-07-11 4-04-04	228.51 148.00		
	1	G12 GABLE	10 /12	**8-06-00**	5-02-03	2 x 4	1-03-08 1-03-08	1-07-11 1-07-11	41.52 27.83		
	1	T13 Hip	10 /12	**16-07-00**	7-04-07	2 x 4	1-03-08 1-03-08	1-07-11 1-07-11	83.14 52.67		

DELIVERY SHIPLIST

TAMARACK ROOF TRUSSES INC.
ALPA LUMBER GROUP

Lumber Yard:	TAMARACK LUMBER	Job Track:	50469
Builder:	BAYVIEW WELLINGTON	PlanLog:	204710
Project:	ALCONA SHORES	Layout ID:	418650
Location:	INNISFIL	Ref #	
Model:	S45-4C HUMMINGBIRD 4	Page:	2 of 4
Lot #:		Date:	11/14/2023
Elevation:	A OPT COFF	Designer:	
		Sales Rep:	Rick DiCiano

Roof Trusses

PROFILE	QTY PLY	MARK TYPE	PITCH	SPAN	HEIGHT	LUMBER	OVERHANG LEFT RIGHT	HEEL HEIGHT LEFT RIGHT	LBS. BFT.	BUNDLE # STACK #	LOAD BY REMARKS
	1	T14 Common	10 /12	**16-07-00**	8-06-10	2 x 4	1-03-08 1-03-08	1-07-11 1-07-11	81.59 51.33		
	2	T15 Hip Girder	10 /12	**13-00-00**	6-06-07	2 x 4	1-03-08 1-03-08	1-07-11 1-07-11	130.92 84.00		
	2	T16 Roof Special	10 /12	**9-04-00**	5-06-06	2 x 4	1-03-08 1-03-08	1-07-11 1-07-11	106.14 72.00		
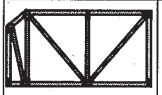	1	T17 Half Hip	10 /12	**9-04-00**	4-11-11	2 x 4		3-11-03 4-11-11	50.53 33.00		
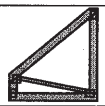	1	T18C Half Hip Girder	10 /12	**5-04-00**	5-08-07	2 x 6		1-07-11 5-08-07	36.67 23.50		
	1 2-ply	T50 Jack-Closed Girder	10 /12	**5-10-08**	6-06-07	2 x 4 2 x 6		1-07-11 6-06-07	72.89 46.67		
	1 2-ply	T50Z Jack-Closed Girder	10 /12	**5-10-08**	6-06-07	2 x 4 2 x 6		1-07-11 6-06-07	72.89 46.67		
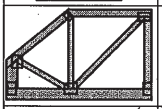	1 2-ply	T51 Half Hip Girder	10 /12	**5-10-08**	3-08-11	2 x 4 2 x 6		1-07-11 3-08-11	63.18 41.67		
	9	T90 Monopitch	8 /12	**2-05-00**	3-06-05	2 x 4	1-03-08	1-04-13 3-00-02	159.85 106.50		
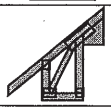	10	T91 Monopitch	10 /12	**1-07-00**	3-07-04	2 x 4	1-03-08	1-07-11 2-11-08	165.24 128.33		
	1	P1 Piggyback	10 /12	**16-02-00**	1-08-00	2 x 4			48.62 30.17		
	1	P2 Piggyback	10 /12	**16-02-00**	3-04-00	2 x 4			52.02 33.50		
	1 3-ply	P3 Piggyback	10 /12	**16-02-00**	4-03-04	2 x 4			150.15 92.50		
	1	P4 Piggyback	10 /12	**13-06-00**	1-08-00	2 x 4			40.4 25.83		

DELIVERY SHIPLIST

TAMARACK ROOF TRUSSES INC.
ALPA LUMBER GROUP

Lumber Yard:	TAMARACK LUMBER	Job Track:	50469
Builder:	BAYVIEW WELLINGTON	PlanLog:	204710
Project:	ALCONA SHORES	Layout ID:	418650
Location:	INNISFIL	Ref #	
Model:	S45-4C HUMMINGBIRD 4	Page:	3 of 4
Lot #:		Date:	11/14/2023
Elevation:	A OPT COFF	Designer:	
		Sales Rep:	Rick DiCiano

Roof Trusses

PROFILE	QTY PLY	MARK TYPE	PITCH	SPAN	HEIGHT	LUMBER	OVERHANG LEFT RIGHT	HEEL HEIGHT LEFT RIGHT	LBS. BFT.	BUNDLE # STACK #	LOAD BY REMARKS
	1	P5 Piggyback	10 /12	**13-06-00**	3-04-00	2 x 4			40.99 26.67		
	1	P6 Piggyback	10 /12	**13-06-00**	5-00-00	2 x 4			44.02 28.17		
	2	P7 Piggyback	10 /12	**13-06-00**	5-07-08	2 x 4			87.91 54.33		
	1	P8S Piggyback	10 /12	**16-02-00**	5-07-08	2 x 4			55.86 34.67		
	1	P9S Piggyback	10 /12	**16-02-00**	5-07-08	2 x 4			59.46 37.67		
	1	P10 Piggyback	10 /12	**16-02-00**	5-00-13	2 x 4			51.27 31.33		
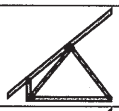	15	J1 Jack-Open	10 /12	**5-10-08**	6-06-07	2 x 4	1-03-08	1-07-11 6-06-07	393.87 255.00		
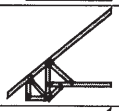	8	J1S Jack-Open	10 /12 12 /12	**5-10-08**	6-06-07	2 x 4	1-03-08	1-07-11 5-06-07	216.91 152.00		
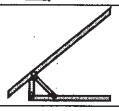	1	J2 Jack-Open	10 /12	**4-10-08**	5-08-07	2 x 4	1-03-08	1-07-11 5-08-07	17.85 11.67		
	1	J3 Jack-Open Girder	10 /12	**4-10-08**	3-01-09	2 x 4	1-03-08	1-07-11 5-08-07	13.27 9.00		
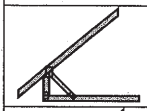	1	J4 Jack-Open	10 /12	**4-10-08**	4-09-09	2 x 4	1-03-08	1-07-11 5-08-07	16.23 10.33		
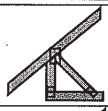	6	J5 Jack-Open	10 /12	**1-10-08**	3-01-09	2 x 4	1-03-08	1-07-11 3-02-07	59.07 42.00		
	6	J6 Jack-Open	10 /12	**1-10-08**	4-09-09	2 x 4	1-03-08 1-10-15	1-07-11 3-02-07	76.89 50.00		
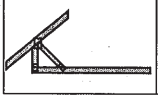	5	J7 Jack-Open Girder	10 /12	**5-10-08**	3-01-09	2 x 4	1-03-08	1-07-11 6-06-07	72.03 48.33		

DELIVERY SHIPLIST

Lumber Yard:	TAMARACK LUMBER	Job Track:	50469
Builder:	BAYVIEW WELLINGTON	PlanLog:	204710
Project:	ALCONA SHORES	Layout ID:	418650
Location:	INNISFIL	Ref #	
Model:	S45-4C HUMMINGBIRD 4	Page:	4 of 4
Lot #:		Date:	11/14/2023
Elevation:	A OPT COFF	Designer:	
		Sales Rep:	Rick DiCiano

Roof Trusses

PROFILE	QTY PLY	MARK TYPE	PITCH	SPAN	HEIGHT	LUMBER	OVERHANG LEFT RIGHT	HEEL HEIGHT LEFT RIGHT	LBS. BFT.	BUNDLE # STACK #	LOAD BY REMARKS
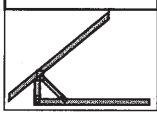	5	J8 Jack-Open	10 /12	5-10-08	4-09-09	2 x 4	1-03-08	1-07-11 6-06-07	86.88 55.00		

TOTAL # TRUSS= **121** TOTAL BFT OF ALL TRUSSES= **4913.51** BFT. TOTAL WEIGHT OF ALL TRSSES **7790.93** LBS

HARDWARE

QTY	TYPE	MODEL	LENGTH
2	Hardware	CP3-6	
3	Hardware	HGUS26-2	
12	Hardware	LJS26DS	
6	Hardware	LUS24	
1	Hardware	THGQ3-SDS4.5MAX	

TOTAL NUMBER OF ITEMS= **24**

DELIVERY SHIPLIST

TAMARACK ROOF TRUSSES INC.
ALPA LUMBER GROUP

Lumber Yard:	TAMARACK LUMBER	Job Track:	50469
Builder:	BAYVIEW WELLINGTON	PlanLog:	204710
Project:	ALCONA SHORES	Layout ID:	418651
Location:	INNISFIL	Ref #	
Model:	S45-4C HUMMINGBIRD 4	Page:	1 of 3
Lot #:		Date:	11/14/2023
Elevation:	B	Designer:	
		Sales Rep:	Rick DiCiano

Roof Trusses

PROFILE	QTY PLY	MARK TYPE	PITCH	SPAN	HEIGHT	LUMBER	OVERHANG LEFT RIGHT	HEEL HEIGHT LEFT RIGHT	LBS. BFT.	BUNDLE # STACK #	LOAD BY REMARKS
	1 2-ply	T1 Hip Girder	10 /12	**35-11-00**	6-06-13	2 x 6	1-03-08 1-03-08	1-07-11 1-07-11	453.91 266.67		
	1	T2 Hip	10 /12	**35-11-00**	8-02-07	2 x 4	1-03-08 1-03-08	1-07-11 1-07-11	179.61 112.33		
	8	T3 Hip	10 /12	**35-11-00**	9-10-07	2 x 4	1-03-08 1-03-08	1-07-11 1-07-11	1537.26 962.67		
	2	T12 Common	10 /12	**8-06-00**	5-02-03	2 x 4	1-03-08 1-03-08	1-07-11 1-07-11	79.43 53.67		
	1	G12 GABLE	10 /12	**8-06-00**	5-02-03	2 x 4	1-03-08 1-03-08	1-07-11 1-07-11	41.52 27.83		
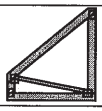	1	T18C Half Hip Girder	10 /12	**5-04-00**	5-08-07	2 x 6		1-07-11 5-08-07	36.67 23.50		
	1 2-ply	T19 Hip Girder	10 /12	**35-11-00**	8-09-01	2 x 6	1-03-08 1-03-08	1-07-11 1-07-11	528.86 308.67		
	1 2-ply	T20 Hip Girder	10 /12	**31-11-00**	6-06-13	2 x 6	1-03-08 1-03-08	1-07-11 1-07-11	419.06 254.67		
	1	T21 Hip	10 /12	**31-11-00**	8-02-07	2 x 4	1-03-08 1-03-08	1-07-11 1-07-11	157.4 100.00		
	4	T22 Hip	10 /12	**31-11-00**	9-10-07	2 x 4	1-03-08 1-03-08	1-07-11 1-07-11	656.58 413.33		
	1	T23 Hip	10 /12	**15-03-00**	7-04-07	2 x 4	1-03-08 1-03-08	1-07-11 1-07-11	79.83 50.83		
	1	T24 Common	10 /12	**15-03-00**	7-11-15	2 x 4	1-03-08 1-03-08	1-07-11 1-07-11	71.11 45.33		
	1 2-ply	T25 Common	10 /12	**13-00-00**	7-01-01	2 x 6	1-03-08 1-03-08	1-07-11 1-07-11	169.89 104.00		
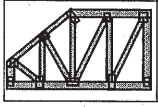	1 2-ply	T26 Half Hip Girder	10 /12	**8-06-00**	4-09-03	2 x 4 2 x 6		1-07-11 4-09-03	131.78 86.00		

DELIVERY SHIPLIST

TAMARACK ROOF TRUSSES INC.
ALPA LUMBER GROUP

Lumber Yard:	TAMARACK LUMBER	Job Track:	50469
Builder:	BAYVIEW WELLINGTON	PlanLog:	204710
Project:	ALCONA SHORES	Layout ID:	418651
Location:	INNISFIL	Ref #	
Model:	S45-4C HUMMINGBIRD 4	Page:	2 of 3
Lot #:		Date:	11/14/2023
Elevation:	B	Designer:	
		Sales Rep:	Rick DiCiano

Roof Trusses

PROFILE	QTY PLY	MARK TYPE	PITCH	SPAN	HEIGHT	LUMBER	OVERHANG LEFT RIGHT	HEEL HEIGHT LEFT RIGHT	LBS. BFT.	BUNDLE # STACK #	LOAD BY REMARKS
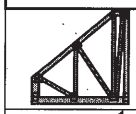	1 2-ply	T60 Half Hip Girder	10 /12	**6-03-08**	6-01-00	2 x 4 2 x 6		1-08-15 6-01-00	91.58 63.33		
	1 2-ply	T61 Jack-Open Girder	10 /12	**5-10-08**	6-06-07	2 x 4 2 x 6		1-07-11 6-06-07	71.58 45.67		
	9	T90 Monopitch	8 /12	**2-05-00**	3-06-05	2 x 4	1-03-08	1-04-13 3-00-02	159.85 106.50		
	10	T91 Monopitch	10 /12	**1-07-00**	3-07-04	2 x 4	1-03-08	1-07-11 2-11-08	165.24 128.33		
	1	G93 GABLE	10 /12	**7-10-00**	4-08-10	2 x 4	1-03-08 1-03-08	4-13 4-13	29.69 19.50		
	2	T93 Common	10 /12	**7-10-00**	4-08-10	2 x 4	1-03-08 1-03-08	4-13 4-13	56.37 37.67		
	2	T93A Common	10 /12	**6-11-00**	4-08-10	2 x 4	1-03-08	4-13 1-02-00	56.81 38.00		
	2	P1 Piggyback	10 /12	**16-02-00**	1-08-00	2 x 4			97.23 60.33		
	2	P2 Piggyback	10 /12	**16-02-00**	3-04-00	2 x 4			104.04 67.00		
	1	P11 Piggyback	10 /12	**12-02-00**	1-08-00	2 x 4			36.3 22.83		
	1	P12 Piggyback	10 /12	**12-02-00**	3-04-00	2 x 4			37.02 24.17		
	1	P13 Piggyback	10 /12	**12-02-00**	5-00-13	2 x 4			33.94 20.50		
	2	P20 Piggyback	10 /12	**16-02-00**	5-00-00	2 x 4			102.28 64.00		
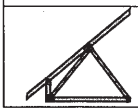	19	J1 Jack-Open	10 /12	**5-10-08**	6-06-07	2 x 4	1-03-08	1-07-11 6-06-07	498.91 323.00		

DELIVERY SHIPLIST

Lumber Yard:	TAMARACK LUMBER	Job Track:	50469
Builder:	BAYVIEW WELLINGTON	PlanLog:	204710
Project:	ALCONA SHORES	Layout ID:	418651
Location:	INNISFIL	Ref #	
Model:	S45-4C HUMMINGBIRD 4	Page:	3 of 3
Lot #:		Date:	11/14/2023
Elevation:	B	Designer:	
		Sales Rep:	Rick DiCiano

Roof Trusses

PROFILE	QTY / PLY	MARK / TYPE	PITCH	SPAN	HEIGHT	LUMBER	OVERHANG LEFT / RIGHT	HEEL HEIGHT LEFT / RIGHT	LBS. / BFT.	BUNDLE # / STACK #	LOAD BY / REMARKS
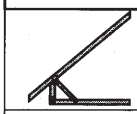	1	J2 Jack-Open	10 /12	**4-10-08**	5-08-07	2 x 4	1-03-08	1-07-11 5-08-07	17.85 11.67		
	1	J3 Jack-Open Girder	10 /12	**4-10-08**	3-01-09	2 x 4	1-03-08	1-07-11 5-08-07	13.27 9.00		
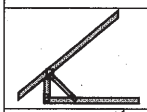	1	J4 Jack-Open	10 /12	**4-10-08**	4-09-09	2 x 4	1-03-08	1-07-11 5-08-07	16.23 10.33		
	4	J5 Jack-Open	10 /12	**1-10-08**	3-01-09	2 x 4	1-03-08	1-07-11 3-02-07	39.38 28.00		
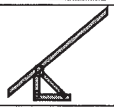	4	J6 Jack-Open	10 /12	**1-10-08**	4-09-09	2 x 4	1-03-08 1-10-15	1-07-11 3-02-07	51.26 33.33		
	3	J7 Jack-Open Girder	10 /12	**5-10-08**	3-01-09	2 x 4	1-03-08	1-07-11 6-06-07	43.22 29.00		
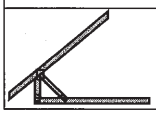	3	J8 Jack-Open	10 /12	**5-10-08**	4-09-09	2 x 4	1-03-08	1-07-11 6-06-07	52.13 33.00		

TOTAL # TRUSS= **103** TOTAL BFT OF ALL TRUSSES= **3984.66** BFT. TOTAL WEIGHT OF ALL TRSSES **6317.09** LBS

HARDWARE

QTY	TYPE	MODEL	LENGTH
2	Hardware	HGUS26-2	
6	Hardware	LJS26DS	
3	Hardware	LUS24	

TOTAL NUMBER OF ITEMS= **11**

DELIVERY SHIPLIST

TAMARACK ROOF TRUSSES INC.
ALPA LUMBER GROUP

Lumber Yard:	TAMARACK LUMBER	Job Track:	50469
Builder:	BAYVIEW WELLINGTON	PlanLog:	204710
Project:	ALCONA SHORES	Layout ID:	418652
Location:	INNISFIL	Ref #	
Model:	S45-4C HUMMINGBIRD 4	Page:	1 of 3
Lot #:		Date:	11/14/2023
Elevation:	B OPT COFF	Designer:	
		Sales Rep:	Rick DiCiano

Roof Trusses

PROFILE	QTY PLY	MARK TYPE	PITCH	SPAN	HEIGHT	LUMBER	OVERHANG LEFT RIGHT	HEEL HEIGHT LEFT RIGHT	LBS. BFT.	BUNDLE # STACK #	LOAD BY REMARKS
	1 2-ply	T1S Hip Girder	10 /12 12 /12	**35-11-00**	6-06-13	2 x 6	1-03-08 1-03-08	1-07-11 1-07-11	484.61 292.67		
	1	T2S Hip	10 /12 12 /12	**35-11-00**	8-02-07	2 x 4	1-03-08 1-03-08	1-07-11 1-07-11	186.72 119.33		
	6	T3 Piggyback Base	10 /12	**35-11-00**	9-10-07	2 x 4	1-03-08 1-03-08	1-07-11 1-07-11	1152.95 722.00		
	2	T3S Hip	10 /12 12 /12	**35-11-00**	9-10-07	2 x 4	1-03-08 1-03-08	1-07-11 1-07-11	404.82 259.33		
	2	T12 Common	10 /12	**8-06-00**	5-02-03	2 x 4	1-03-08 1-03-08	1-07-11 1-07-11	79.43 53.67		
	1	G12 GABLE	10 /12	**8-06-00**	5-02-03	2 x 4	1-03-08 1-03-08	1-07-11 1-07-11	41.52 27.83		
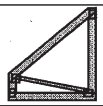	1	T18C Half Hip Girder	10 /12	**5-04-00**	5-08-07	2 x 6		1-07-11 5-08-07	36.67 23.50		
	1 2-ply	T19 Hip Girder	10 /12	**35-11-00**	8-09-01	2 x 6	1-03-08 1-03-08	1-07-11 1-07-11	528.86 308.67		
	1 2-ply	T20 Hip Girder	10 /12	**31-11-00**	6-06-13	2 x 6	1-03-08 1-03-08	1-07-11 1-07-11	419.06 254.67		
	1	T21 Hip	10 /12	**31-11-00**	8-02-07	2 x 4	1-03-08 1-03-08	1-07-11 1-07-11	157.4 100.00		
	4	T22 Hip	10 /12	**31-11-00**	9-10-07	2 x 4	1-03-08 1-03-08	1-07-11 1-07-11	656.58 413.33		
	1	T23 Hip	10 /12	**15-03-00**	7-04-07	2 x 4	1-03-08 1-03-08	1-07-11 1-07-11	79.83 50.83		
	1	T24 Common	10 /12	**15-03-00**	7-11-15	2 x 4	1-03-08 1-03-08	1-07-11 1-07-11	71.11 45.33		
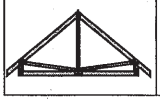	1 2-ply	T25 Common	10 /12	**13-00-00**	7-01-01	2 x 6	1-03-08 1-03-08	1-07-11 1-07-11	169.89 104.00		

DELIVERY SHIPLIST

TAMARACK ROOF TRUSSES INC.
ALPA LUMBER GROUP

Lumber Yard:	TAMARACK LUMBER	Job Track:	50469
Builder:	BAYVIEW WELLINGTON	PlanLog:	204710
Project:	ALCONA SHORES	Layout ID:	418652
Location:	INNISFIL	Ref #	
Model:	S45-4C HUMMINGBIRD 4	Page:	2 of 3
Lot #:		Date:	11/14/2023
Elevation:	B OPT COFF	Designer:	
		Sales Rep:	Rick DiCiano

Roof Trusses

PROFILE	QTY PLY	MARK TYPE	PITCH	SPAN	HEIGHT	LUMBER	OVERHANG LEFT RIGHT	HEEL HEIGHT LEFT RIGHT	LBS. BFT.	BUNDLE # STACK #	LOAD BY REMARKS
	1 2-ply	T26 Half Hip Girder	10 /12	**8-06-00**	4-09-03	2 x 4 2 x 6		1-07-11 4-09-03	131.78 86.00		
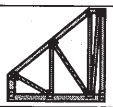	1 2-ply	T60 Half Hip Girder	10 /12	**6-03-08**	6-01-00	2 x 4 2 x 6		1-08-15 6-01-00	91.58 63.33		
	1 2-ply	T61 Jack-Open Girder	10 /12	**5-10-08**	6-06-07	2 x 4 2 x 6		1-07-11 6-06-07	71.58 45.67		
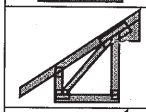	9	T90 Monopitch	8 /12	**2-05-00**	3-06-05	2 x 4	1-03-08	1-04-13 3-00-02	159.85 106.50		
	10	T91 Monopitch	10 /12	**1-07-00**	3-07-04	2 x 4	1-03-08	1-07-11 2-11-08	165.24 128.33		
	1	G93 GABLE	10 /12	**7-10-00**	4-08-10	2 x 4	1-03-08 1-03-08	4-13 4-13	29.69 19.50		
	2	T93 Common	10 /12	**7-10-00**	4-08-10	2 x 4	1-03-08 1-03-08	4-13 4-13	56.37 37.67		
	2	T93A Common	10 /12	**6-11-00**	4-08-10	2 x 4	1-03-08	4-13 1-02-00	56.81 38.00		
	2	P1 Piggyback	10 /12	**16-02-00**	1-08-00	2 x 4			97.23 60.33		
	2	P2 Piggyback	10 /12	**16-02-00**	3-04-00	2 x 4			104.04 67.00		
	1	P11 Piggyback	10 /12	**12-02-00**	1-08-00	2 x 4			36.3 22.83		
	1	P12 Piggyback	10 /12	**12-02-00**	3-04-00	2 x 4			37.02 24.17		
	1	P13 Piggyback	10 /12	**12-02-00**	5-00-13	2 x 4			33.94 20.50		
	2	P20 Piggyback	10 /12	**16-02-00**	5-00-00	2 x 4			102.28 64.00		

DELIVERY SHIPLIST

Lumber Yard:	TAMARACK LUMBER	Job Track:	50469
Builder:	BAYVIEW WELLINGTON	PlanLog:	204710
Project:	ALCONA SHORES	Layout ID:	418652
Location:	INNISFIL	Ref #	
Model:	S45-4C HUMMINGBIRD 4	Page:	3 of 3
Lot #:		Date:	11/14/2023
Elevation:	B OPT COFF	Designer:	
		Sales Rep:	Rick DiCiano

Roof Trusses

PROFILE	QTY PLY	MARK TYPE	PITCH	SPAN	HEIGHT	LUMBER	OVERHANG LEFT RIGHT	HEEL HEIGHT LEFT RIGHT	LBS. BFT.	BUNDLE # STACK #	LOAD BY REMARKS
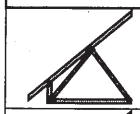	14	J1 Jack-Open	10 /12	**5-10-08**	6-06-07	2 x 4	1-03-08	1-07-11 6-06-07	367.61 238.00		
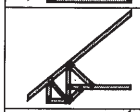	8	J1S Jack-Open	10 /12 12 /12	**5-10-08**	6-06-07	2 x 4	1-03-08	1-07-11 5-06-07	216.91 152.00		
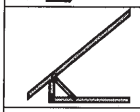	1	J2 Jack-Open	10 /12	**4-10-08**	5-08-07	2 x 4	1-03-08	1-07-11 5-08-07	17.85 11.67		
	1	J3 Jack-Open Girder	10 /12	**4-10-08**	3-01-09	2 x 4	1-03-08	1-07-11 5-08-07	13.27 9.00		
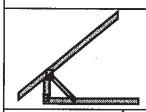	1	J4 Jack-Open	10 /12	**4-10-08**	4-09-09	2 x 4	1-03-08	1-07-11 5-08-07	16.23 10.33		
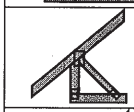	3	J5 Jack-Open	10 /12	**1-10-08**	3-01-09	2 x 4	1-03-08	1-07-11 3-02-07	29.54 21.00		
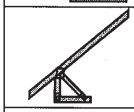	3	J6 Jack-Open	10 /12	**1-10-08**	4-09-09	2 x 4	1-03-08 1-10-15	1-07-11 3-02-07	38.44 25.00		
	2	J7 Jack-Open Girder	10 /12	**5-10-08**	3-01-09	2 x 4	1-03-08	1-07-11 6-06-07	28.81 19.33		
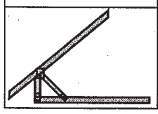	2	J8 Jack-Open	10 /12	**5-10-08**	4-09-09	2 x 4	1-03-08	1-07-11 6-06-07	34.75 22.00		

TOTAL # TRUSS= **102** TOTAL BFT OF ALL TRUSSES= **4067.32** BFT. TOTAL WEIGHT OF ALL TRSSES **6406.57** LBS

HARDWARE

QTY	TYPE	MODEL	LENGTH
2	Hardware	HGUS26-2	
6	Hardware	LJS26DS	
3	Hardware	LUS24	

TOTAL NUMBER OF ITEMS= **11**

JOB NAME	TRUSS NAME	QUANTITY	PLY	JOB DESC.	DRWG NO.
418649	T1	1	2	BAYVIEW WELLINGTON TRUSS DESC.	

Tamarack Roof Truss, Burlington

Version 8.630 S Aug 30 2023 MiTek Industries, Inc. Tue Nov 14 11:14:46 2023 Page 1
ID:UaoF4umx8QMX1bo7Q0Zq7Cya5EO-bxh9oLdwCPoyshQT2Dur8BO3Wd6YFJquJzqX6svJIQ7

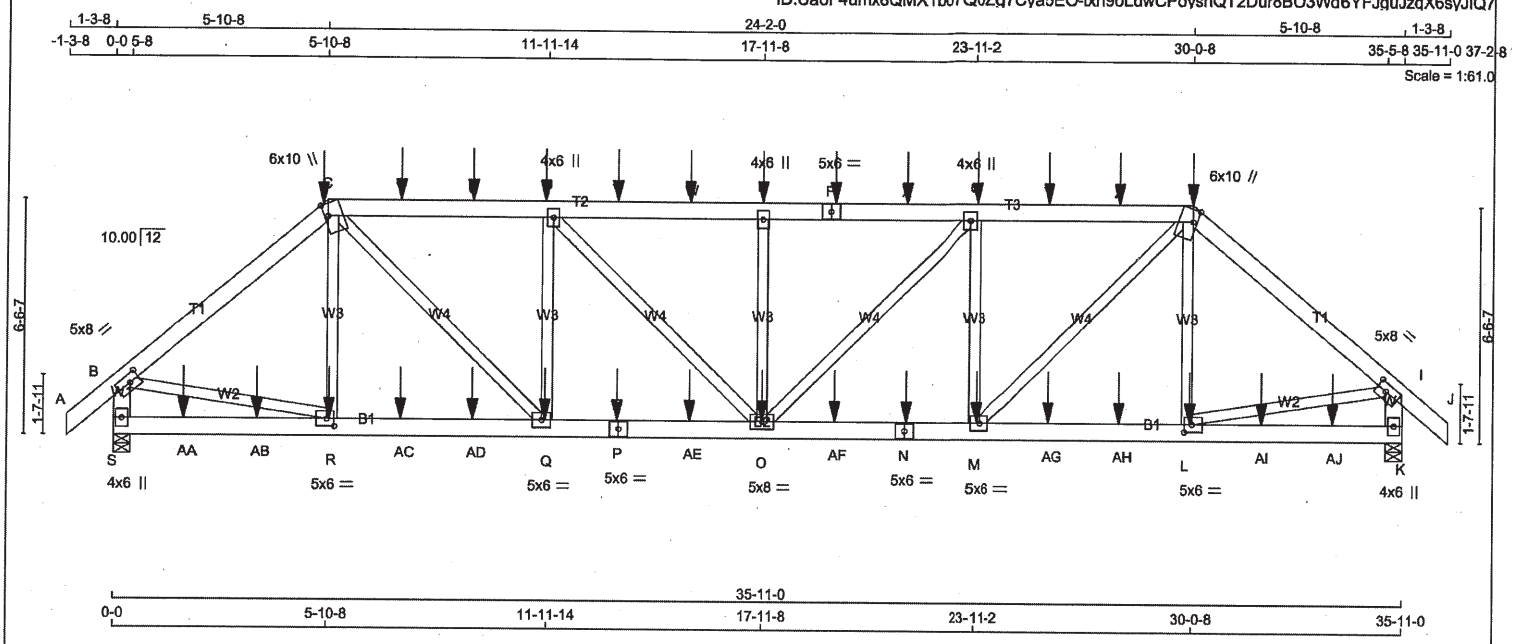

TOTAL WEIGHT = 2 X 227 = 454 lb [M]

LUMBER

N. L. G. A. RULES

CHORDS	SIZE		LUMBER	DESCR.
A - C	2x6	DRY	No.2	SPF
C - F	2x6	DRY	No.2	SPF
F - H	2x6	DRY	No.2	SPF
H - J	2x6	DRY	No.2	SPF
S - B	2x6	DRY	No.2	SPF
K - I	2x6	DRY	No.2	SPF
S - P	2x6	DRY	No.2	SPF
P - N	2x6	DRY	No.2	SPF
N - K	2x6	DRY	No.2	SPF
ALL WEBS EXCEPT	2x4	DRY	No.2	SPF

DRY: SEASONED LUMBER.

DESIGN CONSISTS OF 2 TRUSSES BUILT SEPARATELY THEN FASTENED TOGETHER AS FOLLOWS:

CHORDS	#ROWS	SURFACE SPACING (IN)	LOAD(PLF)
TOP CHORDS : (0.122"X3") SPIRAL NAILS			
A- C	2	12	SIDE(122.0)
C- F	2	12	SIDE(183.1)
F- H	2	12	SIDE(183.1)
H- J	2	12	SIDE(122.0)
S- B	2	12	TOP
K- I	2	12	TOP
BOTTOM CHORDS : (0.122"X3") SPIRAL NAILS			
S- P	2	12	SIDE(183.1)
P- N	2	12	SIDE(183.1)
N- K	2	12	SIDE(183.1)
WEBS : (0.122"X3") SPIRAL NAILS			
2x4	1	6	

NAILS TO BE DRIVEN FROM ONE SIDE ONLY.

GIRDER NAILING ASSUMES NAILED HANGERS ARE FASTENED WITH MIN. 3-0 INCH NAILS.

TOP - COMPONENTS ARE LOADED FROM THE TOP AND MUST BE PLACED ON TOP EDGE OF ALL PLIES FOR THE LOAD TO BE TRANSFERRED TO EACH PLY.

LICENSED PROFESSIONAL ENGINEER
11/14/23
C. M. HEYENS
100505065
PROVINCE OF ONTARIO

STRUCTURAL COMPONENT ONLY
DWG # TR23111077

DIMENSIONS, SUPPORTS AND LOADINGS SPECIFIED BY FABRICATOR TO BE VERIFIED BY BUILDING DESIGNER

BEARINGS

JT	FACTORED GROSS REACTION VERT	HORZ	MAXIMUM FACTORED GROSS REACTION DOWN	HORZ	UPLIFT	INPUT BRG IN-SX	REQRD BRG IN-SX
S	5391	0	5391	0	0	5-8	3-4
K	5391	0	5391	0	0	5-8	3-4

UNFACTORED REACTIONS

JT	1ST LCASE COMBINED	MAX./MIN. COMPONENT REACTIONS SNOW	LIVE	PERM.LIVE	WIND	DEAD	SOIL
S	3752	2803 / 0	0 / 0	0 / 0	0 / 0	949 / 0	0 / 0
K	3752	2803 / 0	0 / 0	0 / 0	0 / 0	949 / 0	0 / 0

BEARING MATERIAL TO BE SPF NO.2 OR BETTER AT JOINT(S) S, K

BRACING

TOP CHORD TO BE SHEATHED OR MAX. PURLIN SPACING = 4.02 FT.
MAX. UNBRACED BOTTOM CHORD LENGTH = 10.00 FT OR RIGID CEILING DIRECTLY APPLIED.

ALL PITCH BREAKS AND PERIMETER CORNER JOINTS MUST BE LATERALLY RESTRAINED.

LOADING

TOTAL LOAD CASES: (4)

CHORDS

MEMB. FR-TO	MAX. FACTORED FORCE (LBS)	FACTORED VERT. LOAD (PLF) FROM	TO	LC1 MAX CSI (LC)	MAX. UNBRAC LENGTH
A- B	0 / 60	-129.7	-129.7	0.05 (1)	10.00
B- C	-6084 / 0	-129.7	-129.7	0.29 (1)	4.56
C- T	-7387 / 0	-129.7	-129.7	0.28 (1)	4.22
T- U	-7387 / 0	-129.7	-129.7	0.28 (1)	4.22
U- D	-7387 / 0	-129.7	-129.7	0.28 (1)	4.22
D- V	-8203 / 0	-129.7	-129.7	0.30 (1)	4.02
V- W	-8203 / 0	-129.7	-129.7	0.30 (1)	4.02
W- E	-8203 / 0	-129.7	-129.7	0.30 (1)	4.02
E- F	-8203 / 0	-129.7	-129.7	0.30 (1)	4.02
F- X	-8203 / 0	-129.7	-129.7	0.30 (1)	4.02
X- G	-8203 / 0	-129.7	-129.7	0.30 (1)	4.02
G- Y	-7387 / 0	-129.7	-129.7	0.28 (1)	4.22
Y- Z	-7387 / 0	-129.7	-129.7	0.28 (1)	4.22
Z- H	-7387 / 0	-129.7	-129.7	0.28 (1)	4.22
H- I	-6084 / 0	-129.7	-129.7	0.29 (1)	4.56
I- J	0 / 60	-129.7	-129.7	0.05 (1)	10.00
S- B	-5340 / 0	0.0	0.0	0.19 (1)	6.33
K- I	-5340 / 0	0.0	0.0	0.19 (1)	6.33
S-AA	0 / 0	-18.5	-18.5	0.09 (1)	10.00
AA-AB	0 / 0	-18.5	-18.5	0.09 (1)	10.00
AB- R	0 / 0	-18.5	-18.5	0.09 (1)	10.00
R-AC	0 / 4657	-18.5	-18.5	0.45 (1)	10.00
AC-AD	0 / 4657	-18.5	-18.5	0.45 (1)	10.00
AD- Q	0 / 4657	-18.5	-18.5	0.45 (1)	10.00
Q- P	0 / 7387	-18.5	-18.5	0.63 (1)	10.00
P-AE	0 / 7387	-18.5	-18.5	0.63 (1)	10.00
AE- O	0 / 7387	-18.5	-18.5	0.63 (1)	10.00
O-AF	0 / 7387	-18.5	-18.5	0.63 (1)	10.00
AF- N	0 / 7387	-18.5	-18.5	0.63 (1)	10.00
N- M	0 / 7387	-18.5	-18.5	0.63 (1)	10.00
M-AG	0 / 4657	-18.5	-18.5	0.45 (1)	10.00
AG-AH	0 / 4657	-18.5	-18.5	0.45 (1)	10.00
AH- L	0 / 4657	-18.5	-18.5	0.45 (1)	10.00
L-AI	0 / 0	-18.5	-18.5	0.09 (1)	10.00
AI-AJ	0 / 0	-18.5	-18.5	0.09 (1)	10.00
AJ- K	0 / 0	-18.5	-18.5	0.09 (1)	10.00

WEBS

MEMB. FR-TO	MAX. FACTORED FORCE (LBS)	MAX CSI (LC)
R- C	-140 / 122	0.03 (1)
C- Q	0 / 3839	0.34 (1)
Q- D	-1719 / 0	0.38 (1)
D- O	0 / 1165	0.10 (1)
O- E	-756 / 0	0.17 (1)
O- G	0 / 1165	0.10 (1)
M- G	-1719 / 0	0.38 (1)
M- H	0 / 3839	0.34 (1)
L- H	-140 / 122	0.03 (1)
B- R	0 / 4739	0.42 (1)
L- I	0 / 4739	0.42 (1)

SPECIFIED CONCENTRATED LOADS (LBS)

JT	LOC.	LC1	MAX-	MAX+	FACE	DIR.	TYPE	HEEL	CONN.
C	5-10-8	-404	-404	---	FRONT	VERT	TOTAL	---	C1
D	11-11-4	-10	-10	---	FRONT	VERT	TOTAL	---	C1

DESIGN CRITERIA

SPECIFIED LOADS:

TOP CH.	LL	=	38.3	PSF
	DL	=	6.0	PSF
BOT CH.	LL	=	0.0	PSF
	DL	=	7.4	PSF
TOTAL LOAD		=	51.6	PSF

SPACING = 24.0 IN. C/C

LOADING IN FLAT SECTION BASED ON A SLOPE OF 6.00/12

THIS TRUSS IS DESIGNED FOR RESIDENTIAL OR SMALL BUILDING REQUIREMENTS OF PART 9, NBCC 2015

THIS DESIGN COMPLIES WITH:
- PART 9 OF BCBC 2018 , NBC-2019AE
- PART 9 OF OBC 2012 (2019 AMENDMENT)
- CSA 086-14
- TPIC 2014

(55 % OF 54.4 P.S.F. G.S.L. PLUS 8.4 P.S.F. RAIN LOAD) EQUALS 38.3 P.S.F. SPECIFIED ROOF LIVE LOAD

ALLOWABLE DEFL.(LL)= L/360 (1.20")
CALCULATED VERT. DEFL.(LL) = L/ 999 (0.16")
ALLOWABLE DEFL.(TL)= L/360 (1.20")
CALCULATED VERT. DEFL.(TL) = L/ 999 (0.27")

CSI: TC=0.30/1.00 (D-E:1) , BC=0.63/1.00 (O-Q:1) , WB=0.42/1.00 (B-R:1) , SSI=0.16/1.00 (C-D:1)

DOL LUMBER=1.00 NAIL=1.00 LS BEND=1.00 COMP=1.00 SHEAR=1.00 TENS= 1.00

COMPANION LIVE LOAD FACTOR = 1.00

TRUSS PLATE MANUFACTURER IS NOT RESPONSIBLE FOR QUALITY CONTROL IN THE TRUSS MANUFACTURING PLANT .

NAIL VALUES

PLATE	GRIP(DRY) (PSI) MAX	MIN	SHEAR (PLI) MAX	MIN	SECTION (PLI) MAX	MIN
MT20	650	371	1747	788	1987	1873

PLATE PLACEMENT TOL. = 0.250 inches

PLATE ROTATION TOL. = 5.0 Deg.

JSI GRIP= 0.87 (R) (INPUT = 0.90)
JSI METAL= 0.74 (P) (INPUT = 1.00)

CONTINUED ON PAGE 2

JOB NAME	TRUSS NAME	QUANTITY	PLY	JOB DESC.	DRWG NO.
418649	T1	1	2	BAYVIEW WELLINGTON TRUSS DESC.	

Tamarack Roof Truss, Burlington

Version 8.630 S Aug 30 2023 MiTek Industries, Inc. Tue Nov 14 11:14:46 2023 Page 2
ID:UaoF4umx8QMX1bo7Q0Zg7Cya5EO-txh9oLdwCPoyshQT2Dur8BO3Wd6YFJguJzqX6syJIQ7

PLATES (table is in inches)

JT	TYPE	PLATES	W	LEN	Y	X
B	TMVW-t	MT20	5.0	8.0	2.50	3.25
C	TTWW+m	MT20	6.0	10.0	4.00	1.25
D	TMWW+t	MT20	4.0	6.0		
E	TMW+w	MT20	4.0	6.0		
F	TS-t	MT20	5.0	6.0		
G	TMWW+t	MT20	4.0	6.0		
H	TTWW+m	MT20	6.0	10.0	4.00	1.25
I	TMVW-t	MT20	5.0	8.0	2.50	3.25
K	BMV1+p	MT20	4.0	6.0		
L	BMWW-t	MT20	5.0	6.0	2.50	2.50
M	BMWW-t	MT20	5.0	6.0		
N	BS-t	MT20	5.0	6.0		
O	BMWWW-t	MT20	5.0	8.0		
P	BS-t	MT20	5.0	6.0		
Q	BMWW-t	MT20	5.0	6.0		
R	BMWW-t	MT20	5.0	6.0	2.50	2.50
S	BMV1+p	MT20	4.0	6.0		

NOTES-

1) Lateral braces to be a minimum of 2X4 SPF #2.

SPECIFIED CONCENTRATED LOADS (LBS)

JT	LOC.	LC1	MAX-	MAX+	FACE	DIR.	TYPE	HEEL	CONN.
E	17-11-8	-10	-10	—	FRONT	VERT	TOTAL	—	C1
F	19-11-12	-10	-10	—	FRONT	VERT	TOTAL	—	C1
G	23-11-12	-10	-10	—	FRONT	VERT	TOTAL	—	C1
H	30-0-8	-404	-404	—	FRONT	VERT	TOTAL	—	C1
L	29-11-12	-193	-193	—	FRONT	VERT	TOTAL	—	C1
M	23-11-12	-193	-193	—	FRONT	VERT	TOTAL	—	C1
N	21-11-12	-193	-193	—	FRONT	VERT	TOTAL	—	C1
O	17-11-8	-193	-193	—	FRONT	VERT	TOTAL	—	C1
P	13-11-4	-193	-193	—	FRONT	VERT	TOTAL	—	C1
Q	11-11-4	-193	-193	—	FRONT	VERT	TOTAL	—	C1
R	5-11-4	-193	-193	—	FRONT	VERT	TOTAL	—	C1
T	7-11-4	-10	-10	—	FRONT	VERT	TOTAL	—	C1
U	9-11-4	-10	-10	—	FRONT	VERT	TOTAL	—	C1
V	13-11-4	-10	-10	—	FRONT	VERT	TOTAL	—	C1
W	15-11-4	-10	-10	—	FRONT	VERT	TOTAL	—	C1
X	21-11-12	-10	-10	—	FRONT	VERT	TOTAL	—	C1
Y	25-11-12	-10	-10	—	FRONT	VERT	TOTAL	—	C1
Z	27-11-12	-10	-10	—	FRONT	VERT	TOTAL	—	C1
AA	1-11-4	-29	-29	—	FRONT	VERT	TOTAL	—	C1
AB	3-11-4	-29	-29	—	FRONT	VERT	TOTAL	—	C1
AC	7-11-4	-193	-193	—	FRONT	VERT	TOTAL	—	C1
AD	9-11-4	-193	-193	—	FRONT	VERT	TOTAL	—	C1
AE	15-11-4	-193	-193	—	FRONT	VERT	TOTAL	—	C1
AF	19-11-12	-193	-193	—	FRONT	VERT	TOTAL	—	C1
AG	25-11-12	-193	-193	—	FRONT	VERT	TOTAL	—	C1
AH	27-11-12	-193	-193	—	FRONT	VERT	TOTAL	—	C1
AI	31-11-12	-29	-29	—	FRONT	VERT	TOTAL	—	C1
AJ	33-11-12	-29	-29	—	FRONT	VERT	TOTAL	—	C1

CONNECTION REQUIREMENTS

1) **C1:** A SUITABLE HANGER/MECHANICAL CONNECTION IS REQUIRED.

LICENSED PROFESSIONAL ENGINEER
11/14/23
C. M. HEYENS
100505065
PROVINCE OF ONTARIO

STRUCTURAL COMPONENT ONLY
DWG # TR23111077

JOB NAME	TRUSS NAME	QUANTITY	PLY	JOB DESC.	DRWG NO.
418650	T1S	1	2	BAYVIEW WELLINGTON TRUSS DESC.	

Tamarack Roof Truss, Burlington

Version 8.630 S Aug 30 2023 MiTek Industries, Inc. Tue Nov 14 11:44:49 2023 Page 1
ID:UaoF4umx8QMX1bo7Q0Zq7Cya5EO-bp7mCsStbNy8gml 9NkfjPZ9NQShCi5Hw 4RtryJHzy

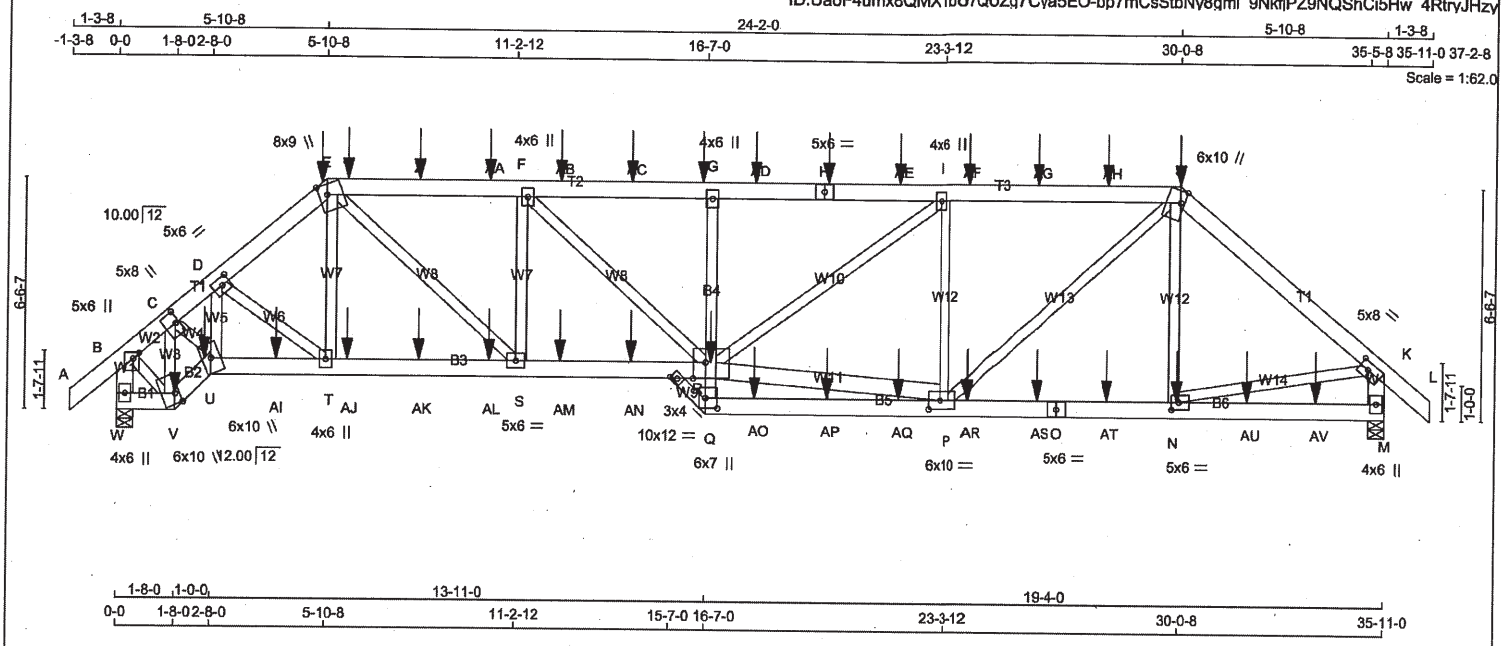

TOTAL WEIGHT = 2 X 242 = 485 lb [M]

LUMBER
N. L. G. A. RULES

CHORDS	SIZE		LUMBER	DESCR.
A - E	2x6	DRY	No.2	SPF
E - H	2x6	DRY	No.2	SPF
H - J	2x6	DRY	No.2	SPF
J - L	2x6	DRY	No.2	SPF
W - B	2x6	DRY	No.2	SPF
M - K	2x6	DRY	No.2	SPF
W - V	2x6	DRY	No.2	SPF
V - U	2x6	DRY	No.2	SPF
U - R	2x6	DRY	No.2	SPF
Q - G	2x4	DRY	No.2	SPF
Q - O	2x6	DRY	No.2	SPF
O - M	2x6	DRY	No.2	SPF
ALL WEBS EXCEPT	2x4	DRY	No.2	SPF
R - P	2x6	DRY	No.2	SPF

DRY: SEASONED LUMBER.

DESIGN CONSISTS OF 2 TRUSSES BUILT SEPARATELY THEN FASTENED TOGETHER AS FOLLOWS:

CHORDS #ROWS		SURFACE SPACING (IN)	LOAD(PLF)
TOP CHORDS : (0.122"X3") SPIRAL NAILS			
A- E	2	12	SIDE(122.0)
E- H	2	12	SIDE(183.1)
H- J	2	12	SIDE(61.0)
J- L	2	12	SIDE(122.0)
W- B	2	12	TOP
M- K	2	12	TOP
BOTTOM CHORDS : (0.122"X3") SPIRAL NAILS			
W- V	2	12	SIDE(61.0)
V- U	2	12	SIDE(122.0)
U- R	2	12	TOP
Q- O	2	12	SIDE(0.0)
O- M	2	12	SIDE(183.1)
G- Q	1	12	TOP
WEBS : (0.122"X3") SPIRAL NAILS			
T- E	1	6	SIDE(114.0)
2x4	1	6	
2x6	2	6	

NAILS TO BE DRIVEN FROM ONE SIDE ONLY.

LICENSED PROFESSIONAL ENGINEER
11/14/23
C. M. HEYENS
100505065
PROVINCE OF ONTARIO

STRUCTURAL COMPONENT ONLY
DWG # TR23111100

DIMENSIONS, SUPPORTS AND LOADINGS SPECIFIED BY FABRICATOR TO BE VERIFIED BY BUILDING DESIGNER

BEARINGS

JT.	FACTORED GROSS REACTION VERT.	HORZ	MAXIMUM FACTORED GROSS REACTION DOWN	HORZ	UPLIFT	INPUT BRG IN-SX	REQRD BRG IN-SX
W	6206	0	6206	0	0	5-8	4-9
M	5500	0	5500	0	0	5-8	3-7

UNFACTORED REACTIONS

JT	1ST LCASE COMBINED	MAX./MIN. COMPONENT REACTIONS SNOW	LIVE	PERM.LIVE	WIND	DEAD	SOIL
W	4310	3278 / 0	0 / 0	0 / 0	0 / 0	1032 / 0	0 / 0
M	3827	2864 / 0	0 / 0	0 / 0	0 / 0	963 / 0	0 / 0

BEARING MATERIAL TO BE SPF NO.2 OR BETTER AT JOINT(S) W, M

BRACING
TOP CHORD TO BE SHEATHED OR MAX. PURLIN SPACING = 3.55 FT.
MAX. UNBRACED BOTTOM CHORD LENGTH = 7.81 FT OR RIGID CEILING DIRECTLY APPLIED.

ALL PITCH BREAKS AND PERIMETER CORNER JOINTS MUST BE LATERALLY RESTRAINED.

LOADING
TOTAL LOAD CASES: (4)

CHORDS

MEMB. FR-TO	MAX. FACTORED FORCE (LBS)	FACTORED VERT. LOAD (PLF) FROM	TO	LC1	MAX CSI (LC)	MAX. UNBRAC LENGTH
A- B	0 / 60	-129.7	-129.7	0.05 (1)	10.00	
B- C	-5136 / 0	-129.7	-129.7	0.18 (1)	4.98	
C- D	-8371 / 0	-129.7	-129.7	0.23 (1)	4.00	
D- E	-8019 / 0	-129.7	-129.7	0.15 (1)	4.17	
E- Y	-9030 / 0	-129.7	-129.7	0.35 (1)	3.79	
Y- Z	-9030 / 0	-129.7	-129.7	0.35 (1)	3.79	
Z-AA	-9030 / 0	-129.7	-129.7	0.35 (1)	3.79	
AA- F	-9030 / 0	-129.7	-129.7	0.35 (1)	3.79	
F-AB	-10104 / 0	-129.7	-129.7	0.39 (1)	3.57	
AB-AC	-10104 / 0	-129.7	-129.7	0.39 (1)	3.57	
AC- G	-10104 / 0	-129.7	-129.7	0.39 (1)	3.57	
G-AD	-10070 / 0	-129.7	-129.7	0.43 (1)	3.55	
AD- H	-10070 / 0	-129.7	-129.7	0.43 (1)	3.55	
H-AE	-10070 / 0	-129.7	-129.7	0.43 (1)	3.55	
AE- I	-10070 / 0	-129.7	-129.7	0.43 (1)	3.55	
I-AF	-7805 / 0	-129.7	-129.7	0.35 (1)	4.05	
AF-AG	-7805 / 0	-129.7	-129.7	0.35 (1)	4.05	
AG-AH	-7805 / 0	-129.7	-129.7	0.35 (1)	4.05	
AH- J	-7805 / 0	-129.7	-129.7	0.35 (1)	4.05	
J- K	-6224 / 0	-129.7	-129.7	0.30 (1)	4.51	
K- L	0 / 60	-129.7	-129.7	0.05 (1)	10.00	
W- B	-6191 / 0	0.0	0.0	0.22 (1)	5.95	
M- K	-5450 / 0	0.0	0.0	0.20 (1)	6.28	
W- V	0 / 0	-18.5	-18.5	0.00 (4)	10.00	
V- U	0 / 4852	-18.5	-18.5	0.32 (1)	10.00	
U-AI	0 / 6545	-18.5	-18.5	0.49 (1)	10.00	
AI- T	0 / 6545	-18.5	-18.5	0.49 (1)	10.00	
T-AJ	0 / 6156	-18.5	-18.5	0.46 (1)	10.00	
AJ-AK	0 / 6156	-18.5	-18.5	0.46 (1)	10.00	
AK-AL	0 / 6156	-18.5	-18.5	0.46 (1)	10.00	
AL- S	0 / 6156	-18.5	-18.5	0.46 (1)	10.00	
S-AM	0 / 9030	-18.5	-18.5	0.67 (1)	10.00	
AM-AN	0 / 9030	-18.5	-18.5	0.67 (1)	10.00	
AN- R	0 / 9030	-18.5	-18.5	0.67 (1)	10.00	
Q- R	0 / 384	0.0	0.0	0.16 (1)	10.00	
R- G	-936 / 0	0.0	0.0	0.21 (1)	7.81	
Q-AO	0 / 174	-18.5	-18.5	0.27 (1)	10.00	
AO-AP	0 / 174	-18.5	-18.5	0.27 (1)	10.00	
AP-AQ	0 / 174	-18.5	-18.5	0.27 (1)	10.00	
AQ- P	0 / 174	-18.5	-18.5	0.27 (1)	10.00	
P-AR	0 / 4764	-18.5	-18.5	0.57 (1)	10.00	

WEBS

MEMB. FR-TO	MAX. FACTORED FORCE (LBS)	MAX CSI (LC)
V- C	-5546 / 0	0.34 (1)
U- D	0 / 4785	0.42 (1)
D- T	0 / 95	0.01 (4)
T- E	-513 / 0	0.05 (1)
E- S	0 / 633	0.06 (1)
S- F	0 / 3900	0.34 (1)
F- R	-2177 / 0	0.32 (1)
R- P	0 / 1480	0.13 (1)
R- I	0 / 7765	0.50 (1)
P- I	0 / 2799	0.25 (1)
P- J	-2719 / 0	0.61 (1)
N- J	0 / 4118	0.36 (1)
B- V	-153 / 118	0.03 (1)
N- K	0 / 4483	0.40 (1)
	0 / 4848	0.43 (1)

DESIGN CRITERIA

*** SPECIAL LOADS ANALYSIS ***
GEOMETRY AND/OR BASIC LOADS CHANGED BY USER.
LOADS WERE DERIVED FROM USER INPUT
NO FURTHER MODIFICATIONS WERE MADE

SPECIFIED LOADS:

TOP CH.	LL	=	38.3	PSF
	DL	=	6.0	PSF
BOT CH.	LL	=	0.0	PSF
	DL	=	7.4	PSF
TOTAL LOAD		=	51.6	PSF

SPACING = 24.0 IN. C/C

LOADING IN FLAT SECTION BASED ON A SLOPE OF 6.00/12

*** NON STANDARD GIRDER ***
ADDT'L USER-DEFINED LOADS APPLIED TO ALL LOAD CASES.

THIS TRUSS IS DESIGNED FOR RESIDENTIAL OR SMALL BUILDING REQUIREMENTS OF PART 9, NBCC 2015

THIS DESIGN COMPLIES WITH:
- PART 9 OF BCBC 2018 , NBC-2019AE
- PART 9 OF OBC 2012 (2019 AMENDMENT)
- CSA 086-14
- TPIC 2014

DESIGN ASSUMPTIONS
-OVERHANG NOT TO BE ALTERED OR CUT OFF.

(55 % OF 54.4 P.S.F. G.S.L. PLUS 8.4 P.S.F. RAIN LOAD) EQUALS 38.3 P.S.F. SPECIFIED ROOF LIVE LOAD

ALLOWABLE DEFL.(LL)= L/360 (1.20")
CALCULATED VERT. DEFL.(LL) = L/ 999 (0.22")
ALLOWABLE DEFL.(TL)= L/360 (1.20")
CALCULATED VERT. DEFL.(TL) = L/ 999 (0.38")

CSI: TC=0.43/1.00 (G-I:1) , BC=0.67/1.00 (R-S:1) , WB=0.61/1.00 (I-P:1) , SSI=0.22/1.00 (E-F:1)

DOL LUMBER=1.00 NAIL=1.00 LS BEND=1.00 COMP=1.00 SHEAR=1.00 TENS= 1.00

COMPANION LIVE LOAD FACTOR = 1.00

TRUSS PLATE MANUFACTURER IS NOT RESPONSIBLE FOR QUALITY CONTROL IN THE TRUSS MANUFACTURING PLANT .

NAIL VALUES

PLATE	GRIP(DRY) (PSI) MAX	MIN	SHEAR (PLI) MAX	MIN	SECTION (PLI) MAX	MIN
MT20	650	371	1747	788	1987	1873

PLATE PLACEMENT TOL. = 0.250 inches

PLATE ROTATION TOL. = 5.0 Deg.

CONTINUED ON PAGE 2

JOB NAME	TRUSS NAME	QUANTITY	PLY	JOB DESC.	DRWG NO.
418650	T1S	1	2	BAYVIEW WELLINGTON TRUSS DESC.	

Tamarack Roof Truss, Burlington

GIRDER NAILING ASSUMES NAILED HANGERS ARE FASTENED WITH MIN. 3-0 INCH NAILS.

PLATES (table is in Inches)

JT	TYPE	PLATES	W	LEN	Y	X
B	TMVW+p	MT20	5.0	6.0	2.00	2.00
C	TMWW+t	MT20	5.0	8.0	4.00	1.25
D	TMWW-t	MT20	5.0	6.0	2.50	2.75
E	TTWW+m	MT20	8.0	9.0	Edge	2.75
F	TMWW+t	MT20	4.0	6.0		
G	TMV+p	MT20	4.0	6.0		
H	TS-t	MT20	5.0	6.0		
I	TMWW+t	MT20	4.0	6.0		
J	TTWW+m	MT20	6.0	10.0	4.00	1.25
K	TMVW-t	MT20	5.0	8.0	2.50	3.25
M	BMV1+p	MT20	4.0	6.0		
N	BMWW-t	MT20	5.0	6.0	2.50	2.50
O	BS-t	MT20	5.0	6.0		
P	BMWWW-t	MT20	6.0	10.0	3.00	4.00
Q						
Q						
Q	BVW*+m	MT20	6.0	7.0	3.50	4.00
R	BVMWWW-l	MT20	10.0	12.0	5.50	4.00
S	BMWW-t	MT20	5.0	6.0		
T	BMWW+t	MT20	4.0	6.0		
U	BBWW+m	MT20	6.0	10.0		
V	BBWW+m	MT20	6.0	10.0	3.50	1.50
W	BMV1+p	MT20	4.0	6.0		
X	NP+w	MT20	3.0	4.0	2.00	1.25

Edge - INDICATES REFERENCE CORNER OF PLATE TOUCHES EDGE OF CHORD.

NOTES-

1) Lateral braces to be a minimum of 2X4 SPF #2.

LOADING

TOTAL LOAD CASES: (4)

CHORDS

MEMB. FR-TO	MAX. FACTORED FORCE (LBS)	FACTORED VERT. LOAD LC1 (PLF) FROM	TO	MAX CSI (LC)	MAX. UNBRAC LENGTH
AR-AS	0 / 4764	-18.5	-18.5	0.57 (1)	10.00
AS- O	0 / 4764	-18.5	-18.5	0.57 (1)	10.00
O-AT	0 / 4764	-18.5	-18.5	0.57 (1)	10.00
AT- N	0 / 4764	-18.5	-18.5	0.57 (1)	10.00
N-AU	0 / 0	-18.5	-18.5	0.09 (1)	10.00
AU-AV	0 / 0	-18.5	-18.5	0.09 (1)	10.00
AV- M	0 / 0	-18.5	-18.5	0.09 (1)	10.00

WEBS

MEMB. FR-TO	MAX. FACTORED FORCE (LBS)	MAX CSI (LC)

SPECIFIED CONCENTRATED LOADS (LBS)

JT	LOC.	LC1	MAX-	MAX+	FACE	DIR.	TYPE	HEEL	CONN.
E	5-10-8	-84	-84	—	FRONT	VERT	DEAD	—	C1
E	5-10-8	-689	-689	—	FRONT	VERT	SNOW	—	C1
G	16-5-12	-94	-94	—	FRONT	VERT	TOTAL	—	C1
H	19-11-12	-10	-10	—	FRONT	VERT	TOTAL	—	C1
J	30-0-8	-404	-404	—	FRONT	VERT	TOTAL	—	C1
N	29-11-12	-193	-193	—	FRONT	VERT	TOTAL	—	C1
R	16-8-12	-97	-97	—	TOP	VERT	TOTAL	—	C1
U	2-8-0	-99	-99	—	TOP	VERT	TOTAL	—	C1
V	1-8-0	-200	-200	—	FRONT	VERT	TOTAL	—	C1
Y	6-5-12	-111	-111	—	FRONT	VERT	TOTAL	—	C1
Z	8-5-12	-94	-94	—	FRONT	VERT	TOTAL	—	C1
AA	10-5-12	-94	-94	—	FRONT	VERT	TOTAL	—	C1
AB	12-5-12	-94	-94	—	FRONT	VERT	TOTAL	—	C1
AC	14-5-12	-94	-94	—	FRONT	VERT	TOTAL	—	C1
AD	17-11-8	-10	-10	—	FRONT	VERT	TOTAL	—	C1
AE	21-11-12	-10	-10	—	FRONT	VERT	TOTAL	—	C1
AF	23-11-12	-10	-10	—	FRONT	VERT	TOTAL	—	C1
AG	25-11-12	-10	-10	—	FRONT	VERT	TOTAL	—	C1
AH	27-11-12	-10	-10	—	FRONT	VERT	TOTAL	—	C1
AI	4-5-12	-92	-92	—	TOP	VERT	TOTAL	—	C1
AJ	6-5-12	-92	-92	—	TOP	VERT	TOTAL	—	C1
AK	8-5-12	-92	-92	—	TOP	VERT	TOTAL	—	C1
AL	10-5-12	-92	-92	—	TOP	VERT	TOTAL	—	C1
AM	12-5-12	-92	-92	—	TOP	VERT	TOTAL	—	C1
AN	14-5-12	-92	-92	—	TOP	VERT	TOTAL	—	C1
AO	17-11-8	-193	-193	—	FRONT	VERT	TOTAL	—	C1
AP	19-11-12	-193	-193	—	FRONT	VERT	TOTAL	—	C1
AQ	21-11-12	-193	-193	—	FRONT	VERT	TOTAL	—	C1
AR	23-11-12	-193	-193	—	FRONT	VERT	TOTAL	—	C1
AS	25-11-12	-193	-193	—	FRONT	VERT	TOTAL	—	C1
AT	27-11-12	-193	-193	—	FRONT	VERT	TOTAL	—	C1
AU	31-11-12	-29	-29	—	FRONT	VERT	TOTAL	—	C1
AV	33-11-12	-29	-29	—	FRONT	VERT	TOTAL	—	C1

CONNECTION REQUIREMENTS

1) **C1:** A SUITABLE HANGER/MECHANICAL CONNECTION IS REQUIRED.

JSI GRIP= 0.89 (N) (INPUT = 0.90)
JSI METAL= 0.88 (B) (INPUT = 1.00)

LICENSED PROFESSIONAL ENGINEER
11/14/23
C. M. HEYENS
100505065
PROVINCE OF ONTARIO

STRUCTURAL COMPONENT ONLY
DWG # TR23111100

JOB NAME	TRUSS NAME	QUANTITY	PLY	JOB DESC.	DRWG NO.
418649	T2	1	1	BAYVIEW WELLINGTON TRUSS DESC.	

Tamarack Roof Truss, Burlington

Version 8.630 S Aug 30 2023 MiTek Industries, Inc. Tue Nov 14 11:14:47 2023 Page 1

ID:UaoF4umx8QMX1bo7Q0Zq7Cya5EO-L8FX?heYzjwpUq?fbwP4hPw8D1Ui gG2YdZ5elyJIQ6

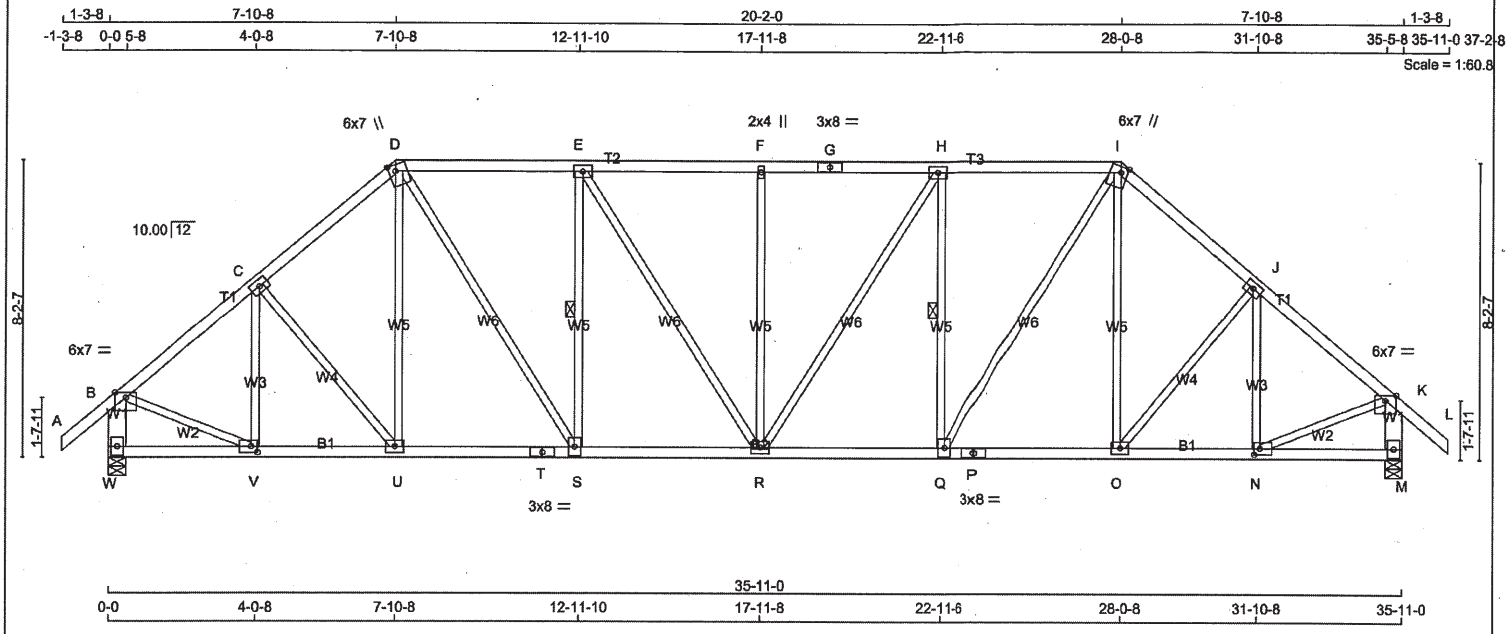

TOTAL WEIGHT = 180 lb [M]

LUMBER

N. L. G. A. RULES

CHORDS	SIZE		LUMBER	DESCR.
A - D	2x4	DRY	No.2	SPF
D - G	2x4	DRY	No.2	SPF
G - I	2x4	DRY	No.2	SPF
I - L	2x4	DRY	No.2	SPF
W - B	2x6	DRY	No.2	SPF
M - K	2x6	DRY	No.2	SPF
W - T	2x4	DRY	No.2	SPF
T - P	2x4	DRY	No.2	SPF
P - M	2x4	DRY	No.2	SPF
ALL WEBS EXCEPT	2x3	DRY	No.2	SPF

DRY: SEASONED LUMBER.

PLATES (table is in Inches)

JT	TYPE	PLATES	W	LEN	Y	X
B	TMVW-p	MT20	6.0	7.0	Edge	
C, E, H, J						
C	TMWW-t	MT20	4.0	6.0		
D	TTWW+m	MT20	6.0	7.0	2.00	2.25
F	TMW+w	MT20	2.0	4.0		
G	TS-t	MT20	3.0	8.0		
I	TTWW+m	MT20	6.0	7.0	2.00	2.25
K	TMVW-p	MT20	6.0	7.0	Edge	
M	BMV1+p	MT20	4.0	6.0		
N	BMWW-t	MT20	4.0	6.0	2.00	2.00
O	BMWW-t	MT20	4.0	6.0		
P	BS-t	MT20	3.0	8.0		
Q	BMWW+t	MT20	4.0	6.0		
R	BMWWW-t	MT20	4.0	6.0		
S	BMWW+t	MT20	4.0	6.0		
T	BS-t	MT20	3.0	8.0		
U	BMWW-t	MT20	4.0	6.0		
V	BMWW-t	MT20	4.0	6.0	2.00	2.00
W	BMV1+p	MT20	4.0	6.0		

Edge - INDICATES REFERENCE CORNER OF PLATE TOUCHES EDGE OF CHORD.

NOTES-

1) Lateral braces to be a minimum of 2X4 SPF #2.

LICENSED PROFESSIONAL ENGINEER
11/14/23
C. M. HEYENS
100505065
PROVINCE OF ONTARIO

STRUCTURAL COMPONENT ONLY
DWG # TR23111078

DIMENSIONS, SUPPORTS AND LOADINGS SPECIFIED BY FABRICATOR TO BE VERIFIED BY BUILDING DESIGNER

BEARINGS

JT	FACTORED GROSS REACTION VERT	HORZ	MAXIMUM FACTORED GROSS REACTION DOWN	HORZ	UPLIFT	INPUT BRG IN-SX	REQRD BRG IN-SX
W	2841	0	2841	0	0	5-8	3-12
M	2841	0	2841	0	0	5-8	3-12

UNFACTORED REACTIONS

JT	1ST LCASE COMBINED	MAX./MIN. COMPONENT REACTIONS SNOW	LIVE	PERM.LIVE	WIND	DEAD	SOIL
W	1977	1479 / 0	0 / 0	0 / 0	0 / 0	498 / 0	0 / 0
M	1977	1479 / 0	0 / 0	0 / 0	0 / 0	498 / 0	0 / 0

BEARING MATERIAL TO BE SPF NO.2 OR BETTER AT JOINT(S) W, M

BRACING

TOP CHORD TO BE SHEATHED OR MAX. PURLIN SPACING = 3.28 FT.
MAX. UNBRACED BOTTOM CHORD LENGTH = 10.00 FT OR RIGID CEILING DIRECTLY APPLIED.

ALL PITCH BREAKS AND PERIMETER CORNER JOINTS MUST BE LATERALLY RESTRAINED.

1 LATERAL BRACE(S) AT 1/ 2 LENGTH OF H-Q, E-S.

END VERTICAL(S) MUST BE SHEATHED OR HAVE BRACES AS INDICATED IN THE MAX. UNBRACED LENGTH COLUMN OF THE TABLE BELOW

LOADING

TOTAL LOAD CASES: (4)

CHORDS

MEMB. FR-TO	MAX. FACTORED FORCE (LBS)	FACTORED VERT. LOAD (PLF) FROM	TO	LC1	MAX CSI (LC)	MAX. UNBRAC LENGTH
A- B	0 / 58	-129.7	-129.7	0.18 (1)	10.00	
B- C	-2690 / 0	-129.7	-129.7	0.47 (1)	3.78	
C- D	-2751 / 0	-129.7	-129.7	0.47 (1)	3.74	
D- E	-2835 / 0	-129.7	-129.7	0.67 (1)	3.42	
E- F	-3050 / 0	-129.7	-129.7	0.69 (1)	3.28	
F- G	-3050 / 0	-129.7	-129.7	0.69 (1)	3.28	
G- H	-3050 / 0	-129.7	-129.7	0.69 (1)	3.28	
H- I	-2835 / 0	-129.7	-129.7	0.67 (1)	3.42	
I- J	-2751 / 0	-129.7	-129.7	0.47 (1)	3.74	
J- K	-2690 / 0	-129.7	-129.7	0.47 (1)	3.78	
K- L	0 / 58	-129.7	-129.7	0.18 (1)	10.00	
W- B	-2806 / 0	0.0	0.0	0.19 (1)	6.25	
M- K	-2806 / 0	0.0	0.0	0.19 (1)	6.25	
W- V	0 / 0	-18.5	-18.5	0.06 (4)	10.00	
V- U	0 / 2094	-18.5	-18.5	0.38 (1)	10.00	
U- T	0 / 2079	-18.5	-18.5	0.38 (1)	10.00	
T- S	0 / 2079	-18.5	-18.5	0.38 (1)	10.00	
S- R	0 / 2836	-18.5	-18.5	0.51 (1)	10.00	
R- Q	0 / 2836	-18.5	-18.5	0.51 (1)	10.00	
Q- P	0 / 2079	-18.5	-18.5	0.38 (1)	10.00	
P- O	0 / 2079	-18.5	-18.5	0.38 (1)	10.00	
O- N	0 / 2094	-18.5	-18.5	0.38 (1)	10.00	
N- M	0 / 0	-18.5	-18.5	0.06 (4)	10.00	

WEBS

MEMB. FR-TO	MAX. FACTORED FORCE (LBS)	MAX CSI (LC)
U- D	0 / 109	0.03 (4)
O- I	0 / 109	0.03 (4)
Q- I	0 / 1394	0.31 (1)
D- S	0 / 1394	0.31 (1)
Q- H	-1075 / 0	0.46 (1)
S- E	-1075 / 0	0.46 (1)
R- H	0 / 401	0.09 (1)
E- R	0 / 401	0.09 (1)
R- F	-595 / 0	0.78 (1)
C- U	-26 / 0	0.02 (1)
V- C	-607 / 0	0.22 (1)
B- V	0 / 2201	0.50 (1)
O- J	-26 / 0	0.02 (1)
N- J	-607 / 0	0.22 (1)
N- K	0 / 2201	0.50 (1)

DESIGN CRITERIA

SPECIFIED LOADS:

TOP CH.	LL =	38.3	PSF
	DL =	6.0	PSF
BOT CH.	LL =	0.0	PSF
	DL =	7.4	PSF
TOTAL LOAD	=	51.6	PSF

SPACING = 24.0 IN. C/C

LOADING IN FLAT SECTION BASED ON A SLOPE OF 6.00/12

THIS TRUSS IS DESIGNED FOR RESIDENTIAL OR SMALL BUILDING REQUIREMENTS OF PART 9, NBCC 2015

THIS DESIGN COMPLIES WITH:
- PART 9 OF BCBC 2018 , NBC-2019AE
- PART 9 OF OBC 2012 (2019 AMENDMENT)
- CSA 086-14
- TPIC 2014

(55 % OF 54.4 P.S.F. G.S.L. PLUS 8.4 P.S.F. RAIN LOAD) EQUALS 38.3 P.S.F. SPECIFIED ROOF LIVE LOAD

ALLOWABLE DEFL.(LL)= L/360 (1.20")
CALCULATED VERT. DEFL.(LL) = L/ 999 (0.16")
ALLOWABLE DEFL.(TL)= L/360 (1.20")
CALCULATED VERT. DEFL.(TL) = L/ 999 (0.27")

CSI: TC=0.69/1.00 (F-H:1) , BC=0.51/1.00 (R-S:1) , WB=0.78/1.00 (F-R:1) , SSI=0.31/1.00 (H-I:1)

DOL LUMBER=1.00 NAIL=1.00 LS BEND=1.10 COMP=1.10 SHEAR=1.10 TENS= 1.10

COMPANION LIVE LOAD FACTOR = 1.00

AUTOSOLVE HEELS OFF

TRUSS PLATE MANUFACTURER IS NOT RESPONSIBLE FOR QUALITY CONTROL IN THE TRUSS MANUFACTURING PLANT .

NAIL VALUES

PLATE	GRIP(DRY) (PSI) MAX	MIN	SHEAR (PLI) MAX	MIN	SECTION (PLI) MAX	MIN
MT20	650	371	1747	788	1987	1873

PLATE PLACEMENT TOL. = 0.250 inches

PLATE ROTATION TOL. = 5.0 Deg.

JSI GRIP= 0.86 (N) (INPUT = 0.90)
JSI METAL= 0.58 (P) (INPUT = 1.00)

JOB NAME	TRUSS NAME	QUANTITY	PLY	JOB DESC.	DRWG NO.
418650	T2S	1	1	BAYVIEW WELLINGTON TRUSS DESC.	

Tamarack Roof Truss, Burlington

Version 8.630 S Aug 30 2023 MiTek Industries, Inc. Tue Nov 14 11:44:50 2023 Page 1
ID:UaoF4umx8QMX1bo7Q0Zg7Cya5EO-3?h8QCSVMh4?lwKAj5FuGd6Bpqqox8gQ8eq PlyJHzx

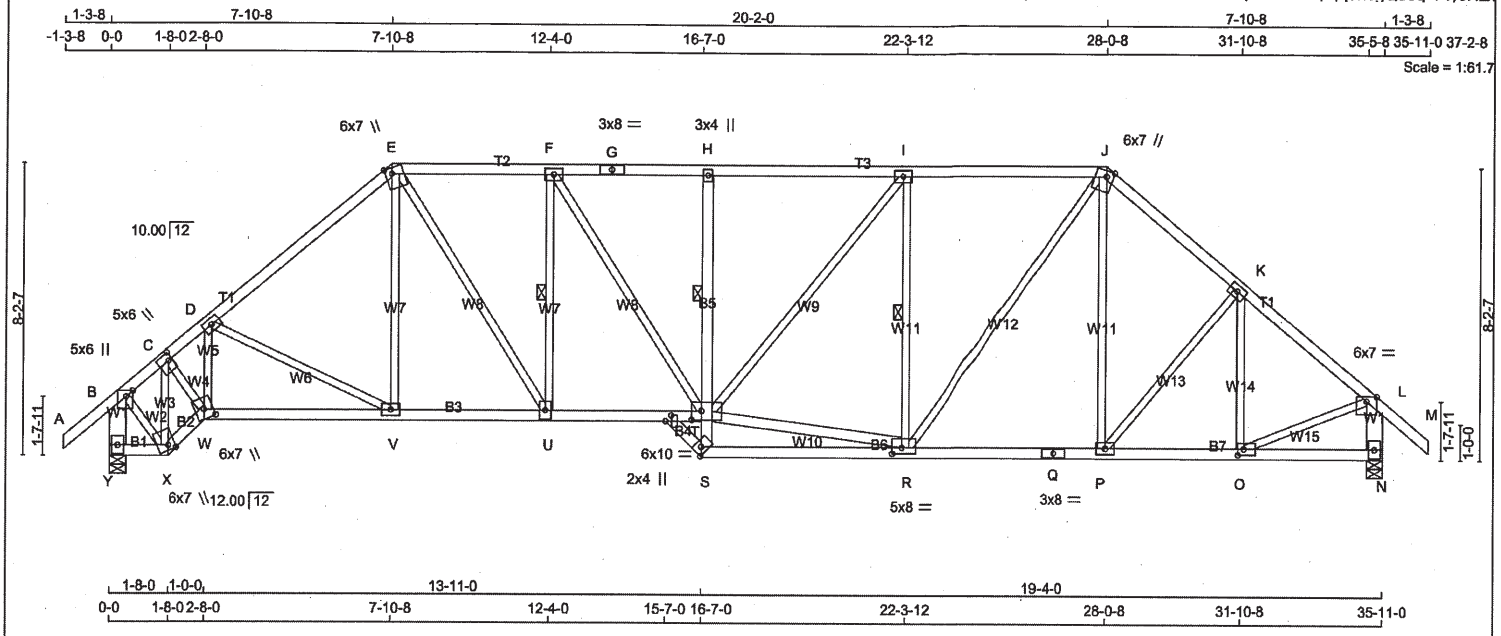

TOTAL WEIGHT = 187 lb [M]

LUMBER
N. L. G. A. RULES

CHORDS	SIZE		LUMBER	DESCR.
A - E	2x4	DRY	No.2	SPF
E - G	2x4	DRY	No.2	SPF
G - J	2x4	DRY	No.2	SPF
J - M	2x4	DRY	No.2	SPF
Y - B	2x6	DRY	No.2	SPF
N - L	2x6	DRY	No.2	SPF
Y - X	2x4	DRY	No.2	SPF
X - W	2x4	DRY	No.2	SPF
W - T	2x4	DRY	No.2	SPF
S - H	2x4	DRY	No.2	SPF
S - Q	2x4	DRY	No.2	SPF
Q - N	2x4	DRY	No.2	SPF
ALL WEBS	2x3	DRY	No.2	SPF
EXCEPT				
T - R	2x4	DRY	No.2	SPF

DRY: SEASONED LUMBER.

PLATES (table is in inches)

JT	TYPE	PLATES	W	LEN	Y	X
B	TMVW+p	MT20	5.0	6.0	2.00	2.25
C	TMWW+t	MT20	5.0	6.0	2.50	1.25
D, F, I, K						
D	TMWW-t	MT20	4.0	6.0		
E	TTWW+m	MT20	6.0	7.0	2.00	2.25
G	TS-t	MT20	3.0	8.0		
H	TMV+p	MT20	3.0	4.0		
J	TTWW+m	MT20	6.0	7.0	2.00	2.25
L	TMVW-p	MT20	6.0	7.0	Edge	
N	BMV1+p	MT20	4.0	6.0		
O	BMWW-t	MT20	4.0	6.0	2.00	2.00
P	BMWW-t	MT20	4.0	6.0		
Q	BS-t	MT20	3.0	8.0		
R	BMWWW-t	MT20	5.0	8.0	2.00	3.25
S	BBV+h	MT20	4.0	6.0	Edge	
T	BVMWWW-l	MT20	6.0	10.0	3.00	3.25
U	BMWW+t	MT20	4.0	6.0		
V	BMWW-t	MT20	4.0	6.0		
W	BBWW+m	MT20	6.0	7.0	3.25	3.00
X	BBWW+m	MT20	6.0	7.0	Edge	2.25
Y	BMV1+p	MT20	4.0	6.0		
Z	NP+p	MT20	2.0	4.0	2.00	2.00

LICENSED PROFESSIONAL ENGINEER
11/14/23
C. M. HEYENS
100505065
PROVINCE OF ONTARIO

STRUCTURAL COMPONENT ONLY
DWG # TR23111101

DIMENSIONS, SUPPORTS AND LOADINGS SPECIFIED BY FABRICATOR TO BE VERIFIED BY BUILDING DESIGNER

BEARINGS

JT	FACTORED GROSS REACTION VERT	HORZ	MAXIMUM FACTORED GROSS REACTION DOWN	HORZ	UPLIFT	INPUT BRG IN-SX	REQRD BRG IN-SX
Y	2845	0	2845	0	0	5-8	3-12
N	2838	0	2838	0	0	5-8	3-12

UNFACTORED REACTIONS

JT	1ST LCASE COMBINED	MAX./MIN. COMPONENT REACTIONS SNOW	LIVE	PERM.LIVE	WIND	DEAD	SOIL
Y	1980	1481 / 0	0 / 0	0 / 0	0 / 0	498 / 0	0 / 0
N	1975	1477 / 0	0 / 0	0 / 0	0 / 0	498 / 0	0 / 0

BEARING MATERIAL TO BE SPF NO.2 OR BETTER AT JOINT(S) Y, N

BRACING
TOP CHORD TO BE SHEATHED OR MAX. PURLIN SPACING = 2.69 FT.
MAX. UNBRACED BOTTOM CHORD LENGTH = 6.25 FT OR RIGID CEILING DIRECTLY APPLIED.

ALL PITCH BREAKS AND PERIMETER CORNER JOINTS MUST BE LATERALLY RESTRAINED.

1 LATERAL BRACE(S) AT 1/ 2 LENGTH OF H-T, I-R, F-U.

END VERTICAL(S) MUST BE SHEATHED OR HAVE BRACES AS INDICATED IN THE MAX. UNBRACED LENGTH COLUMN OF THE TABLE BELOW

LOADING
TOTAL LOAD CASES: (4)

CHORDS

MEMB. FR-TO	MAX. FACTORED FORCE (LBS)	FACTORED VERT. LOAD (PLF) FROM	TO	LC1 MAX CSI (LC)	MAX. UNBRAC LENGTH
A- B	0 / 58	-129.7	-129.7	0.18 (1)	10.00
B- C	-2048 / 0	-129.7	-129.7	0.22 (1)	4.52
C- D	-3272 / 0	-129.7	-129.7	0.55 (1)	3.20
D- E	-3125 / 0	-129.7	-129.7	0.79 (1)	3.29
E- F	-3145 / 0	-129.7	-129.7	0.51 (1)	3.46
F- G	-3464 / 0	-129.7	-129.7	0.55 (1)	3.28
G- H	-3464 / 0	-129.7	-129.7	0.55 (1)	3.28
H- I	-3454 / 0	-129.7	-129.7	0.97 (1)	2.69
I- J	-2892 / 0	-129.7	-129.7	0.89 (1)	3.04
J- K	-2747 / 0	-129.7	-129.7	0.47 (1)	3.74
K- L	-2686 / 0	-129.7	-129.7	0.47 (1)	3.78
L- M	0 / 58	-129.7	-129.7	0.18 (1)	10.00
Y- B	-2829 / 0	0.0	0.0	0.20 (1)	6.23
N- L	-2802 / 0	0.0	0.0	0.19 (1)	6.26
Y- X	0 / 0	-18.5	-18.5	0.02 (4)	10.00
X- W	0 / 1970	-18.5	-18.5	0.32 (1)	10.00
W- V	0 / 2712	-18.5	-18.5	0.50 (1)	10.00
V- U	0 / 2369	-18.5	-18.5	0.44 (1)	10.00
U- T	0 / 3146	-18.5	-18.5	0.55 (1)	10.00
S- T	0 / 46	0.0	0.0	0.10 (1)	10.00
T- H	-600 / 0	0.0	0.0	0.12 (1)	6.25
S- R	0 / 66	-18.5	-18.5	0.15 (4)	10.00
R- Q	0 / 2076	-18.5	-18.5	0.41 (1)	10.00
Q- P	0 / 2076	-18.5	-18.5	0.41 (1)	10.00
P- O	0 / 2091	-18.5	-18.5	0.39 (1)	10.00
O- N	0 / 0	-18.5	-18.5	0.06 (4)	10.00

WEBS

MEMB. FR-TO	MAX. FACTORED FORCE (LBS)	MAX CSI (LC)
X- C	-2513 / 0	0.44 (1)
C- W	0 / 2271	0.51 (1)
W- D	-402 / 0	0.07 (1)
D- V	-388 / 0	0.23 (1)
V- E	0 / 262	0.06 (1)
T- R	0 / 2883	0.46 (1)
T- I	0 / 874	0.20 (1)
R- I	-1522 / 0	0.65 (1)
R- J	0 / 1400	0.32 (1)
P- J	0 / 111	0.03 (4)
B- X	0 / 1881	0.42 (1)
P- K	-26 / 0	0.02 (1)
O- K	-607 / 0	0.22 (1)
O- L	0 / 2198	0.49 (1)
F- T	0 / 592	0.13 (1)
U- F	-1119 / 0	0.37 (1)
E- U	0 / 1430	0.32 (1)

DESIGN CRITERIA

SPECIFIED LOADS:

TOP CH.	LL	=	38.3	PSF
	DL	=	6.0	PSF
BOT CH.	LL	=	0.0	PSF
	DL	=	7.4	PSF
TOTAL LOAD		=	51.6	PSF

SPACING = 24.0 IN. C/C

LOADING IN FLAT SECTION BASED ON A SLOPE OF 6.00/12

THIS TRUSS IS DESIGNED FOR RESIDENTIAL OR SMALL BUILDING REQUIREMENTS OF PART 9, NBCC 2015

THIS DESIGN COMPLIES WITH:
- PART 9 OF BCBC 2018 , NBC-2019AE
- PART 9 OF OBC 2012 (2019 AMENDMENT)
- CSA 086-14
- TPIC 2014

DESIGN ASSUMPTIONS
-OVERHANG NOT TO BE ALTERED OR CUT OFF.

(55 % OF 54.4 P.S.F. G.S.L. PLUS 8.4 P.S.F. RAIN LOAD) EQUALS 38.3 P.S.F. SPECIFIED ROOF LIVE LOAD

ALLOWABLE DEFL.(LL)= L/360 (1.20")
CALCULATED VERT. DEFL.(LL) = L/ 999 (0.20")
ALLOWABLE DEFL.(TL)= L/360 (1.20")
CALCULATED VERT. DEFL.(TL) = L/ 999 (0.34")

CSI: TC=0.97/1.00 (H-I:1) , BC=0.55/1.00 (T-U:1) , WB=0.65/1.00 (I-R:1) , SSI=0.35/1.00 (I-J:1)

DOL LUMBER=1.00 NAIL=1.00 LS BEND=1.10 COMP=1.10 SHEAR=1.10 TENS= 1.10

COMPANION LIVE LOAD FACTOR = 1.00

AUTOSOLVE LEFT HEEL ONLY

TRUSS PLATE MANUFACTURER IS NOT RESPONSIBLE FOR QUALITY CONTROL IN THE TRUSS MANUFACTURING PLANT .

NAIL VALUES

PLATE	GRIP(DRY) (PSI) MAX	MIN	SHEAR (PLI) MAX	MIN	SECTION (PLI) MAX	MIN
MT20	650	371	1747	788	1987	1873

PLATE PLACEMENT TOL. = 0.250 inches

PLATE ROTATION TOL. = 5.0 Deg.

JSI GRIP= 0.90 (W) (INPUT = 0.90)
JSI METAL= 0.61 (Q) (INPUT = 1.00)

CONTINUED ON PAGE 2

Edge - INDICATES REFERENCE CORNER OF PLATE TOUCHES EDGE OF CHORD.

NOTES-

1) Lateral braces to be a minimum of 2X4 SPF #2.

LICENSED PROFESSIONAL ENGINEER
11/14/23
C. M. HEYENS
100505065
PROVINCE OF ONTARIO

STRUCTURAL COMPONENT ONLY
DWG # TR23111101

JOB NAME	TRUSS NAME	QUANTITY	PLY	JOB DESC.	DRWG NO.
418649	T3	3	1	BAYVIEW WELLINGTON TRUSS DESC.	

Tamarack Roof Truss, Burlington

Version 8.630 S Aug 30 2023 MiTek Industries, Inc. Tue Nov 14 11:14:48 2023 Page 1
ID:UaoF4umx8QMX1bo7Q0Zg7Cya5EO-qKpvD1fAk02g6 ar9ewJDcTL?RqhjCpBnHJeBkyJIQ5

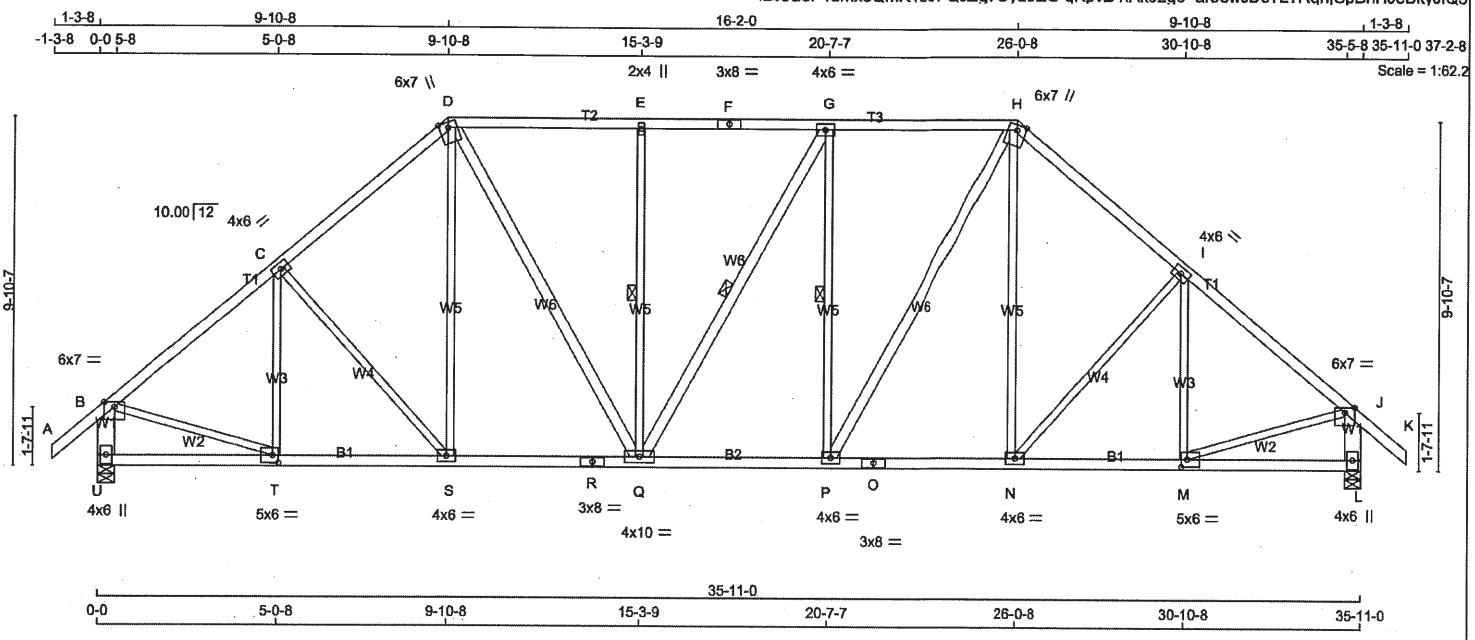

TOTAL WEIGHT = 3 X 192 = 576 lb

[M][F]

LUMBER

N. L. G. A. RULES

CHORDS	SIZE		LUMBER	DESCR.
A - D	2x4	DRY	No.2	SPF
D - F	2x4	DRY	No.2	SPF
F - H	2x4	DRY	No.2	SPF
H - K	2x4	DRY	No.2	SPF
U - B	2x6	DRY	No.2	SPF
L - J	2x6	DRY	No.2	SPF
U - R	2x4	DRY	No.2	SPF
R - O	2x4	DRY	No.2	SPF
O - L	2x4	DRY	No.2	SPF
ALL WEBS	2x3	DRY	No.2	SPF
EXCEPT				
D - Q	2x4	DRY	No.2	SPF
Q - G	2x4	DRY	No.2	SPF
P - H	2x4	DRY	No.2	SPF

DRY: SEASONED LUMBER.

PLATES (table is in inches)

JT	TYPE	PLATES	W	LEN	Y	X
B	TMVW-p	MT20	6.0	7.0	Edge	
C, G, I						
C	TMWW-t	MT20	4.0	6.0		
D	TTWW+m	MT20	6.0	7.0	Edge	
E	TMW+w	MT20	2.0	4.0		
F	TS-t	MT20	3.0	8.0		
H	TTWW+m	MT20	6.0	7.0	Edge	
J	TMVW-p	MT20	6.0	7.0	Edge	
L	BMV1+p	MT20	4.0	6.0		
M	BMWW-t	MT20	5.0	6.0	2.50	2.00
N, P, S						
N	BMWW-t	MT20	4.0	6.0		
O	BS-t	MT20	3.0	8.0		
Q	BMWWW-t	MT20	4.0	10.0		
R	BS-t	MT20	3.0	8.0		
T	BMWW-t	MT20	5.0	6.0	2.50	2.00
U	BMV1+p	MT20	4.0	6.0		

Edge - INDICATES REFERENCE CORNER OF PLATE TOUCHES EDGE OF CHORD.

NOTES-

1) Lateral braces to be a minimum of 2X4 SPF #2.

LICENSED PROFESSIONAL ENGINEER
11/14/23
C. M. HEYENS
100505065
PROVINCE OF ONTARIO

STRUCTURAL COMPONENT ONLY
DWG # TR23111079

DIMENSIONS, SUPPORTS AND LOADINGS SPECIFIED BY FABRICATOR TO BE VERIFIED BY BUILDING DESIGNER

BEARINGS

JT	FACTORED GROSS REACTION VERT	HORZ	MAXIMUM FACTORED GROSS REACTION DOWN	HORZ	UPLIFT	INPUT BRG IN-SX	REQRD BRG IN-SX
U	2841	0	2841	0	0	5-8	3-12
L	2841	0	2841	0	0	5-8	3-12

UNFACTORED REACTIONS

JT	1ST LCASE COMBINED	MAX./MIN. COMPONENT REACTIONS SNOW	LIVE	PERM.LIVE	WIND	DEAD	SOIL
U	1977	1479 / 0	0 / 0	0 / 0	0 / 0	498 / 0	0 / 0
L	1977	1479 / 0	0 / 0	0 / 0	0 / 0	498 / 0	0 / 0

BEARING MATERIAL TO BE SPF NO.2 OR BETTER AT JOINT(S) U, L

BRACING

TOP CHORD TO BE SHEATHED OR MAX. PURLIN SPACING = 3.66 FT.
MAX. UNBRACED BOTTOM CHORD LENGTH = 10.00 FT OR RIGID CEILING DIRECTLY APPLIED.

ALL PITCH BREAKS AND PERIMETER CORNER JOINTS MUST BE LATERALLY RESTRAINED.

1 LATERAL BRACE(S) AT 1/ 2 LENGTH OF E-Q, G-Q, G-P.

END VERTICAL(S) MUST BE SHEATHED OR HAVE BRACES AS INDICATED IN THE MAX. UNBRACED LENGTH COLUMN OF THE TABLE BELOW

LOADING

TOTAL LOAD CASES: (4)

CHORDS

MEMB. FR-TO	MAX. FACTORED FORCE (LBS)	FACTORED VERT. LOAD (PLF) FROM	TO	LC1	MAX CSI (LC)	MAX. UNBRAC LENGTH
A- B	0 / 58	-129.7	-129.7	0.18 (1)	10.00	
B- C	-2775 / 0	-129.7	-129.7	0.55 (1)	3.66	
C- D	-2654 / 0	-129.7	-129.7	0.53 (1)	3.75	
D- E	-2481 / 0	-129.7	-129.7	0.52 (1)	3.84	
E- F	-2481 / 0	-129.7	-129.7	0.48 (1)	3.89	
F- G	-2481 / 0	-129.7	-129.7	0.48 (1)	3.89	
G- H	-2483 / 0	-129.7	-129.7	0.52 (1)	3.84	
H- I	-2654 / 0	-129.7	-129.7	0.53 (1)	3.75	
I- J	-2775 / 0	-129.7	-129.7	0.55 (1)	3.66	
J- K	0 / 58	-129.7	-129.7	0.18 (1)	10.00	
U- B	-2800 / 0	0.0	0.0	0.19 (1)	6.26	
L- J	-2800 / 0	0.0	0.0	0.19 (1)	6.26	
U- T	0 / 0	-18.5	-18.5	0.10 (4)	10.00	
T- S	0 / 2169	-18.5	-18.5	0.40 (1)	10.00	
S- R	0 / 1999	-18.5	-18.5	0.38 (1)	10.00	
R- Q	0 / 1999	-18.5	-18.5	0.38 (1)	10.00	
Q- P	0 / 2483	-18.5	-18.5	0.46 (1)	10.00	
P- O	0 / 1999	-18.5	-18.5	0.38 (1)	10.00	
O- N	0 / 1999	-18.5	-18.5	0.38 (1)	10.00	
N- M	0 / 2169	-18.5	-18.5	0.40 (1)	10.00	
M- L	0 / 0	-18.5	-18.5	0.10 (4)	10.00	

WEBS

MEMB. FR-TO	MAX. FACTORED FORCE (LBS)	MAX CSI (LC)
T- C	-466 / 0	0.24 (1)
C- S	-259 / 0	0.28 (1)
S- D	0 / 292	0.07 (1)
D- Q	0 / 977	0.16 (1)
Q- E	-751 / 0	0.49 (1)
Q- G	-4 / 0	0.00 (1)
P- G	-753 / 0	0.49 (1)
P- H	0 / 982	0.16 (1)
N- H	0 / 289	0.07 (1)
N- I	-259 / 0	0.28 (1)
M- I	-465 / 0	0.24 (1)
B- T	0 / 2240	0.50 (1)
M- J	0 / 2240	0.50 (1)

DESIGN CRITERIA

SPECIFIED LOADS:

TOP CH.	LL	=	38.3	PSF
	DL	=	6.0	PSF
BOT CH.	LL	=	0.0	PSF
	DL	=	7.4	PSF
TOTAL LOAD		=	51.6	PSF

SPACING = 24.0 IN. C/C

LOADING IN FLAT SECTION BASED ON A SLOPE OF 6.00/12

THIS TRUSS IS DESIGNED FOR RESIDENTIAL OR SMALL BUILDING REQUIREMENTS OF PART 9, NBCC 2015

THIS DESIGN COMPLIES WITH:
- PART 9 OF BCBC 2018 , NBC-2019AE
- PART 9 OF OBC 2012 (2019 AMENDMENT)
- CSA 086-14
- TPIC 2014

(55 % OF 54.4 P.S.F. G.S.L. PLUS 8.4 P.S.F. RAIN LOAD) EQUALS 38.3 P.S.F. SPECIFIED ROOF LIVE LOAD

ALLOWABLE DEFL.(LL)= L/360 (1.20")
CALCULATED VERT. DEFL.(LL) = L/ 999 (0.12")
ALLOWABLE DEFL.(TL)= L/360 (1.20")
CALCULATED VERT. DEFL.(TL) = L/ 999 (0.21")

CSI: TC=0.55/1.00 (I-J:1) , BC=0.46/1.00 (P-Q:1) , WB=0.50/1.00 (J-M:1) , SSI=0.33/1.00 (G-H:1)

DOL LUMBER=1.00 NAIL=1.00 LS BEND=1.10 COMP=1.10 SHEAR=1.10 TENS= 1.10

COMPANION LIVE LOAD FACTOR = 1.00

AUTOSOLVE HEELS OFF

TRUSS PLATE MANUFACTURER IS NOT RESPONSIBLE FOR QUALITY CONTROL IN THE TRUSS MANUFACTURING PLANT .

NAIL VALUES

PLATE	GRIP(DRY) (PSI) MAX	MIN	SHEAR (PLI) MAX	MIN	SECTION (PLI) MAX	MIN
MT20	650	371	1747	788	1987	1873

PLATE PLACEMENT TOL. = 0.250 inches

PLATE ROTATION TOL. = 5.0 Deg.

JSI GRIP= 0.86 (M) (INPUT = 0.90)
JSI METAL= 0.60 (R) (INPUT = 1.00)

JOB NAME	TRUSS NAME	QUANTITY	PLY	JOB DESC.	DRWG NO.
418650	T3S	2	1	BAYVIEW WELLINGTON TRUSS DESC.	

Tamarack Roof Truss, Burlington

Version 8.630 S Aug 30 2023 MiTek Industries, Inc. Tue Nov 14 11:44:51 2023 Page 1

ID:UaoF4umx8QMX1bo7Q0Zq7Cya5EO-XCFWdYT77 Crw3vNHom7oqeOlEBlqYlaNlZYykyJHzw

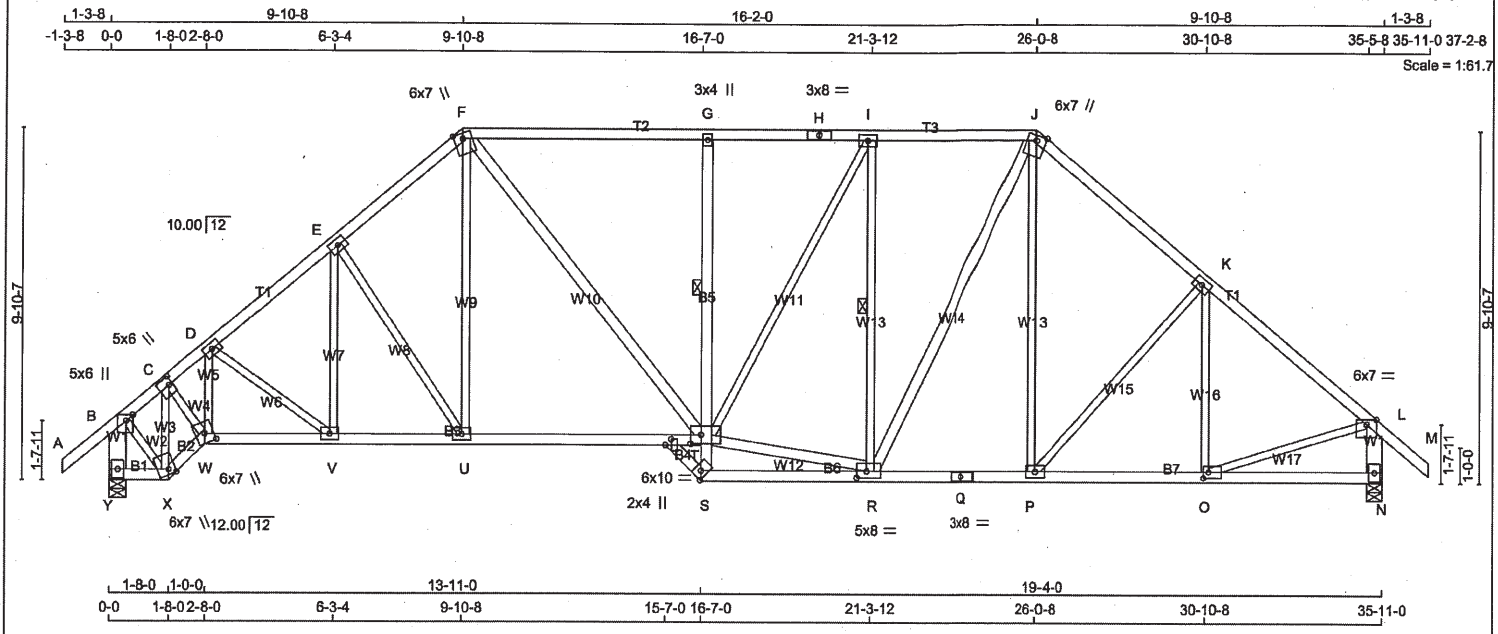

TOTAL WEIGHT = 2 X 202 = 405 lb

[M][F]

LUMBER

N. L. G. A. RULES

CHORDS	SIZE		LUMBER	DESCR.
A - F	2x4	DRY	No.2	SPF
F - H	2x4	DRY	No.2	SPF
H - J	2x4	DRY	No.2	SPF
J - M	2x4	DRY	No.2	SPF
Y - B	2x6	DRY	No.2	SPF
N - L	2x6	DRY	No.2	SPF
Y - X	2x4	DRY	No.2	SPF
X - W	2x4	DRY	No.2	SPF
W - T	2x4	DRY	No.2	SPF
S - G	2x4	DRY	No.2	SPF
S - Q	2x4	DRY	No.2	SPF
Q - N	2x4	DRY	No.2	SPF
ALL WEBS	2x3	DRY	No.2	SPF
EXCEPT				
F - T	2x4	DRY	No.2	SPF
T - R	2x4	DRY	No.2	SPF
R - J	2x4	DRY	No.2	SPF

DRY: SEASONED LUMBER.

PLATES (table is in inches)

JT	TYPE	PLATES	W	LEN	Y	X
B	TMVW+p	MT20	5.0	6.0	2.00	2.25
C	TMWW+t	MT20	5.0	6.0	2.75	1.25
D, E, I, K						
D	TMWW-t	MT20	4.0	6.0		
F	TTWW+m	MT20	6.0	7.0	Edge	
G	TMV+p	MT20	3.0	4.0		
H	TS-t	MT20	3.0	8.0		
J	TTWW+m	MT20	6.0	7.0	Edge	
L	TMVW-p	MT20	6.0	7.0	Edge	
N	BMV1+p	MT20	4.0	6.0		
O	BMWW-t	MT20	4.0	6.0	2.00	1.75
P, U, V						
P	BMWW-t	MT20	4.0	6.0		
Q	BS-t	MT20	3.0	8.0		
R	BMWWW-t	MT20	5.0	8.0	2.25	3.25
S	BBV+h	MT20	4.0	6.0	Edge	
T	BVMWWW-l	MT20	6.0	10.0	3.00	3.50
W	BBWW+m	MT20	6.0	7.0	3.25	3.00
X	BBWW+m	MT20	6.0	7.0	Edge	2.25
Y	BMV1+p	MT20	4.0	6.0		

LICENSED PROFESSIONAL ENGINEER
11/14/23
C. M. HEYENS
100505065
PROVINCE OF ONTARIO

STRUCTURAL COMPONENT ONLY
DWG # TR23111102

DIMENSIONS, SUPPORTS AND LOADINGS SPECIFIED BY FABRICATOR TO BE VERIFIED BY BUILDING DESIGNER

BEARINGS

JT	FACTORED GROSS REACTION VERT	HORZ	MAXIMUM FACTORED GROSS REACTION DOWN	HORZ	UPLIFT	INPUT BRG IN-SX	REQRD BRG IN-SX
Y	2845	0	2845	0	0	5-8	3-12
N	2838	0	2838	0	0	5-8	3-12

UNFACTORED REACTIONS

JT	1ST LCASE COMBINED	MAX./MIN. COMPONENT REACTIONS SNOW	LIVE	PERM.LIVE	WIND	DEAD	SOIL
Y	1980	1481 / 0	0 / 0	0 / 0	0 / 0	498 / 0	0 / 0
N	1975	1477 / 0	0 / 0	0 / 0	0 / 0	498 / 0	0 / 0

BEARING MATERIAL TO BE SPF NO.2 OR BETTER AT JOINT(S) Y, N

BRACING

TOP CHORD TO BE SHEATHED OR MAX. PURLIN SPACING = 2.93 FT.
MAX. UNBRACED BOTTOM CHORD LENGTH = 6.25 FT OR RIGID CEILING DIRECTLY APPLIED.

ALL PITCH BREAKS AND PERIMETER CORNER JOINTS MUST BE LATERALLY RESTRAINED.

1 LATERAL BRACE(S) AT 1/ 2 LENGTH OF G-T, I-R.

END VERTICAL(S) MUST BE SHEATHED OR HAVE BRACES AS INDICATED IN THE MAX. UNBRACED LENGTH COLUMN OF THE TABLE BELOW

LOADING

TOTAL LOAD CASES: (4)

CHORDS

MEMB. FR-TO	MAX. FACTORED FORCE (LBS)	FACTORED VERT. LOAD LC1 (PLF) FROM	TO	MAX CSI (LC)	MAX. UNBRAC LENGTH
A- B	0 / 58	-129.7	-129.7	0.18 (1)	10.00
B- C	-2053 / 0	-129.7	-129.7	0.17 (1)	4.58
C- D	-3315 / 0	-129.7	-129.7	0.19 (1)	3.72
D- E	-3237 / 0	-129.7	-129.7	0.31 (1)	3.66
E- F	-2929 / 0	-129.7	-129.7	0.30 (1)	3.85
F- G	-2827 / 0	-129.7	-129.7	0.89 (1)	2.93
G- H	-2822 / 0	-129.7	-129.7	0.66 (1)	3.34
H- I	-2822 / 0	-129.7	-129.7	0.66 (1)	3.34
I- J	-2422 / 0	-129.7	-129.7	0.42 (1)	4.00
J- K	-2648 / 0	-129.7	-129.7	0.53 (1)	3.75
K- L	-2771 / 0	-129.7	-129.7	0.55 (1)	3.66
L- M	0 / 58	-129.7	-129.7	0.18 (1)	10.00
Y- B	-2829 / 0	0.0	0.0	0.20 (1)	6.23
N- L	-2797 / 0	0.0	0.0	0.19 (1)	6.26
Y- X	0 / 0	-18.5	-18.5	0.02 (4)	10.00
X- W	0 / 1996	-18.5	-18.5	0.32 (1)	10.00
W- V	0 / 2612	-18.5	-18.5	0.47 (1)	10.00
V- U	0 / 2502	-18.5	-18.5	0.51 (1)	10.00
U- T	0 / 2227	-18.5	-18.5	0.46 (1)	10.00
S- T	0 / 38	0.0	0.0	0.06 (1)	10.00
T- G	-880 / 0	0.0	0.0	0.18 (1)	6.25
S- R	0 / 44	-18.5	-18.5	0.10 (4)	10.00
R- Q	0 / 1994	-18.5	-18.5	0.38 (1)	10.00
Q- P	0 / 1994	-18.5	-18.5	0.38 (1)	10.00
P- O	0 / 2166	-18.5	-18.5	0.39 (1)	10.00
O- N	0 / 0	-18.5	-18.5	0.11 (4)	10.00

WEBS

MEMB. FR-TO	MAX. FACTORED FORCE (LBS)	MAX CSI (LC)
X- C	-2547 / 0	0.44 (1)
C- W	0 / 2076	0.47 (1)
W- D	-222 / 0	0.04 (1)
U- F	0 / 551	0.12 (1)
F- T	0 / 960	0.15 (1)
T- R	0 / 2444	0.39 (1)
T- I	0 / 824	0.19 (1)
R- I	-1295 / 0	0.85 (1)
R- J	0 / 980	0.16 (1)
P- J	0 / 279	0.06 (1)
P- K	-262 / 0	0.28 (1)
O- K	-462 / 0	0.24 (1)
B- X	0 / 1907	0.43 (1)
O- L	0 / 2237	0.50 (1)
E- U	-506 / 0	0.41 (1)
V- E	0 / 102	0.03 (4)
D- V	-137 / 0	0.04 (1)

DESIGN CRITERIA

SPECIFIED LOADS:

TOP CH.	LL	=	38.3	PSF
	DL	=	6.0	PSF
BOT CH.	LL	=	0.0	PSF
	DL	=	7.4	PSF
TOTAL LOAD		=	51.6	PSF

SPACING = 24.0 IN. C/C

LOADING IN FLAT SECTION BASED ON A SLOPE OF 6.00/12

THIS TRUSS IS DESIGNED FOR RESIDENTIAL OR SMALL BUILDING REQUIREMENTS OF PART 9, NBCC 2015

THIS DESIGN COMPLIES WITH:
- PART 9 OF BCBC 2018 , NBC-2019AE
- PART 9 OF OBC 2012 (2019 AMENDMENT)
- CSA 086-14
- TPIC 2014

DESIGN ASSUMPTIONS
-OVERHANG NOT TO BE ALTERED OR CUT OFF.

(55 % OF 54.4 P.S.F. G.S.L. PLUS 8.4 P.S.F. RAIN LOAD) EQUALS 38.3 P.S.F. SPECIFIED ROOF LIVE LOAD

ALLOWABLE DEFL.(LL)= L/360 (1.20")
CALCULATED VERT. DEFL.(LL) = L/ 999 (0.16")
ALLOWABLE DEFL.(TL)= L/360 (1.20")
CALCULATED VERT. DEFL.(TL) = L/ 999 (0.30")

CSI: TC=0.89/1.00 (F-G:1) , BC=0.51/1.00 (U-V:1) , WB=0.85/1.00 (I-R:1) , SSI=0.41/1.00 (F-G:1)

DOL LUMBER=1.00 NAIL=1.00 LS BEND=1.10 COMP=1.10 SHEAR=1.10 TENS= 1.10

COMPANION LIVE LOAD FACTOR = 1.00

TRUSS PLATE MANUFACTURER IS NOT RESPONSIBLE FOR QUALITY CONTROL IN THE TRUSS MANUFACTURING PLANT .

NAIL VALUES

PLATE	GRIP(DRY) (PSI) MAX	MIN	SHEAR (PLI) MAX	MIN	SECTION (PLI) MAX	MIN
MT20	650	371	1747	788	1987	1873

PLATE PLACEMENT TOL. = 0.250 inches

PLATE ROTATION TOL. = 5.0 Deg.

JSI GRIP= 0.87 (R) (INPUT = 0.90)
JSI METAL= 0.59 (Q) (INPUT = 1.00)

CONTINUED ON PAGE 2

JOB NAME	TRUSS NAME	QUANTITY	PLY	JOB DESC. BAYVIEW WELLINGTON	DRWG NO.
418650	T3S	2	1	TRUSS DESC.	

Tamarack Roof Truss, Burlington

Version 8.630 S Aug 30 2023 MiTek Industries, Inc. Tue Nov 14 11:44:52 2023 Page 2
ID:UaoF4umx8QMX1bo7Q0Zg7Cya5EO-?OpvquUmulKiXDUZrVHML2BZVeX_P??jcyJ5UAyJHzv

PLATES (table is in inches)

JT	TYPE	PLATES	W	LEN	Y	X
Z	NP+p	MT20	2.0	4.0	2.00	2.00

Edge - INDICATES REFERENCE CORNER OF PLATE TOUCHES EDGE OF CHORD.

NOTES-

1) Lateral braces to be a minimum of 2X4 SPF #2.

LICENSED PROFESSIONAL ENGINEER
11/14/23
C. M. HEYENS
100505065
PROVINCE OF ONTARIO

STRUCTURAL COMPONENT ONLY
DWG # TR23111102

JOB NAME	TRUSS NAME	QUANTITY	PLY	JOB DESC.	DRWG NO.
418649	T4	1	3	BAYVIEW WELLINGTON TRUSS DESC.	

Tamarack Roof Truss, Burlington

Version 8.630 S Aug 30 2023 MiTek Industries, Inc. Tue Nov 14 11:14:49 2023 Page 1

ID:UaoF4umx8QMX1bo7Q0Zq7Cya5EO-lWNlQNfoVKAXk892jLRYmq0ZDrDJSc4L?x2BjAyJlQ4

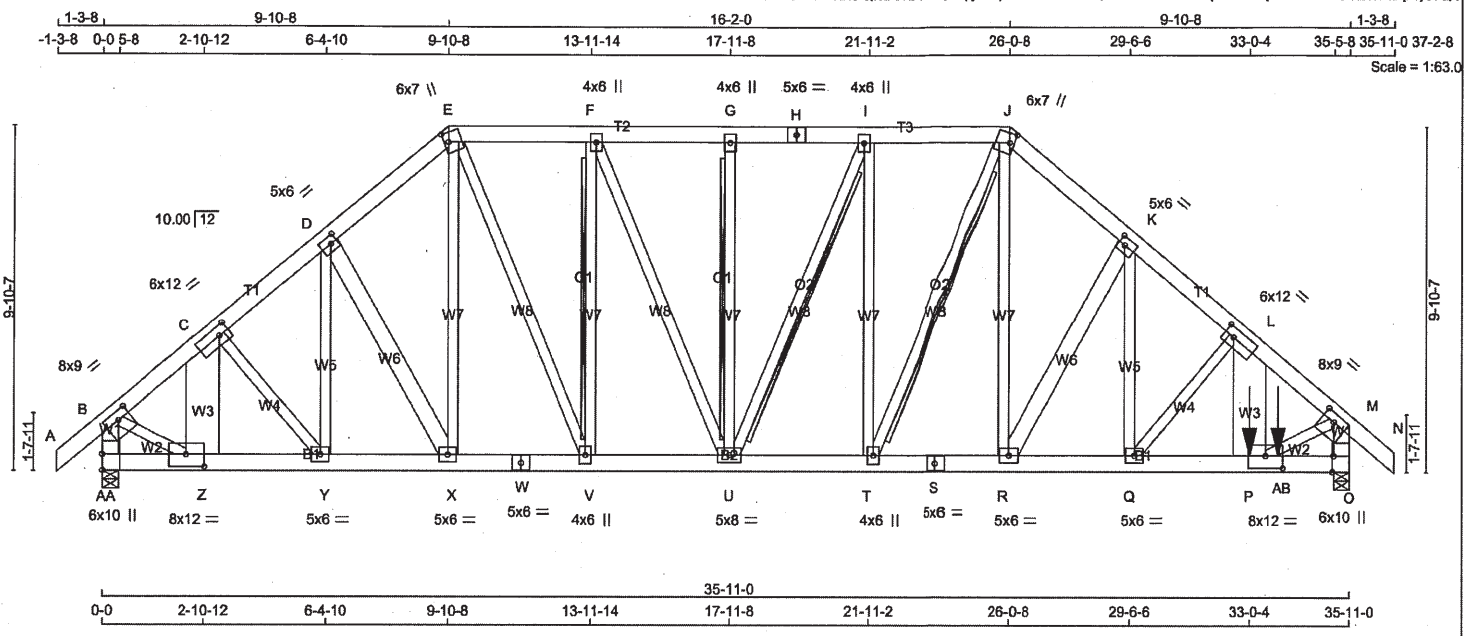

TOTAL WEIGHT = 3 X 324 = 972 lb

LUMBER

N. L. G. A. RULES

CHORDS	SIZE		LUMBER	DESCR.
A - E	2x6	DRY	No.2	SPF
E - H	2x6	DRY	No.2	SPF
H - J	2x6	DRY	No.2	SPF
J - N	2x6	DRY	No.2	SPF
AA- B	2x6	DRY	No.2	SPF
O - M	2x6	DRY	No.2	SPF
AA- W	2x6	DRY	2100F 1.8E	SPF
W - S	2x6	DRY	2100F 1.8E	SPF
S - O	2x6	DRY	2100F 1.8E	SPF
ALL WEBS EXCEPT	2x4	DRY	No.2	SPF
Z - C	2x12	DRY	No.2	SPF
D - X	2x6	DRY	No.2	SPF
R - K	2x6	DRY	No.2	SPF
P - L	2x12	DRY	No.2	SPF

DRY: SEASONED LUMBER.

DESIGN CONSISTS OF 3 TRUSSES BUILT SEPARATELY THEN FASTENED TOGETHER AS FOLLOWS:

CHORDS	#ROWS	SURFACE SPACING (IN)	LOAD(PLF)
TOP CHORDS : (0.122"X3") SPIRAL NAILS			
A- E	2	12	TOP
E- H	2	12	TOP
H- J	2	12	TOP
J- N	2	12	TOP
AA- B	2	12	TOP
O- M	2	12	TOP
BOTTOM CHORDS : (0.122"X3") SPIRAL NAILS			
AA- W	3	4	TOP
W- S	2	12	TOP
S- O	3	4	SIDE(1681.4)
WEBS : (0.122"X3") SPIRAL NAILS			
2x4	1	6	
2x6	2	6	
L- P	6	4	SIDE(2002.4)
2x12	6	4	

STAGGER NAILS BY HALF THE SURFACE SPACING IN ADJACENT PLIES.

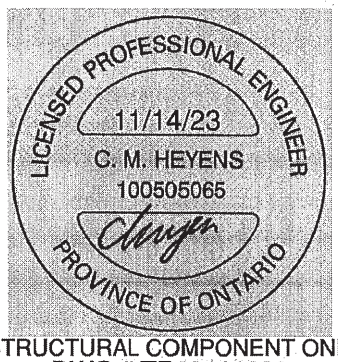

STRUCTURAL COMPONENT ONLY
DWG # TR23111080

DIMENSIONS, SUPPORTS AND LOADINGS SPECIFIED BY FABRICATOR TO BE VERIFIED BY BUILDING DESIGNER

BEARINGS

JT	FACTORED GROSS REACTION VERT	HORZ	MAXIMUM FACTORED GROSS REACTION DOWN	HORZ	UPLIFT	INPUT BRG IN-SX	REQRD BRG IN-SX
AA	3947	0	3947	0	0	5-8	1-8
O	15952	0	15952	0	0	5-8	5-8

UNFACTORED REACTIONS

JT	1ST LCASE COMBINED	MAX./MIN. COMPONENT REACTIONS SNOW	LIVE	PERM.LIVE	WIND	DEAD	SOIL
AA	2751	2034 / 0	0 / 0	0 / 0	0 / 0	717 / 0	0 / 0
O	11170	7959 / 0	0 / 0	0 / 0	0 / 0	3211 / 0	0 / 0

BEARING MATERIAL TO BE SPF NO.2 OR BETTER AT JOINT(S) AA, O
BEARING SIZE FACTOR = 1.15 AT JNT(S) O (BASED ON SUPPORT DEPTH = 1-8)

BRACING

TOP CHORD TO BE SHEATHED OR MAX. PURLIN SPACING = 3.69 FT.
MAX. UNBRACED BOTTOM CHORD LENGTH = 10.00 FT OR RIGID CEILING DIRECTLY APPLIED.

ALL PITCH BREAKS AND PERIMETER CORNER JOINTS MUST BE LATERALLY RESTRAINED.

2x6 DRY SPF No.2 T-BRACE AT F-V, G-U, I-U, J-T

FASTEN T AND I-BRACES TO NARROW EDGE OF WEB WITH ONE ROW PER PLY OF 3" COMMON WIRE NAILS @ 6" O.C. WITH 3" MINIMUM END DISTANCE. BRACE MUST COVER 90% OF WEB LENGTH.

END VERTICAL(S) MUST BE SHEATHED OR HAVE BRACES AS INDICATED IN THE MAX. UNBRACED LENGTH COLUMN OF THE TABLE BELOW

LOADING

TOTAL LOAD CASES: (4)

CHORDS

MEMB. FR-TO	MAX. FACTORED FORCE (LBS)	FACTORED VERT. LOAD (PLF) FROM	TO	LC1	MAX CSI (LC)	MAX. UNBRAC LENGTH
A- B	0 / 60	-129.7	-129.7	0.03 (1)	10.00	
B- C	-3768 / 0	-129.7	-129.7	0.03 (1)	6.25	
C- D	-4257 / 0	-129.7	-129.7	0.04 (1)	6.25	
D- E	-4201 / 0	-129.7	-129.7	0.04 (1)	6.25	
E- F	-4073 / 0	-129.7	-129.7	0.05 (1)	6.25	
F- G	-4634 / 0	-129.7	-129.7	0.05 (1)	6.24	
G- H	-4634 / 0	-129.7	-129.7	0.06 (1)	6.23	
H- I	-4634 / 0	-129.7	-129.7	0.06 (1)	6.23	
I- J	-5011 / 0	-129.7	-129.7	0.06 (1)	6.05	
J- K	-6603 / 0	-129.7	-129.7	0.07 (1)	5.46	
K- L	-9299 / 0	-129.7	-129.7	0.14 (1)	4.71	
L- M	-15802 / 0	-129.7	-129.7	0.22 (1)	3.69	
M- N	0 / 60	-129.7	-129.7	0.03 (1)	10.00	
AA- B	-3890 / 0	0.0	0.0	0.09 (1)	7.81	
O- M	-15211 / 0	0.0	0.0	0.33 (1)	4.81	
AA- Z	0 / 0	-18.5	-18.5	0.01 (1)	10.00	
Z- Y	0 / 2907	-18.5	-18.5	0.06 (1)	10.00	
Y- X	0 / 3280	-18.5	-18.5	0.06 (1)	10.00	
X- W	0 / 3196	-18.5	-18.5	0.06 (1)	10.00	
W- V	0 / 3196	-18.5	-18.5	0.06 (1)	10.00	
V- U	0 / 4073	-18.5	-18.5	0.08 (1)	10.00	
U- T	0 / 5011	-18.5	-18.5	0.09 (1)	10.00	
T- S	0 / 5082	-18.5	-18.5	0.10 (1)	10.00	
S- R	0 / 5082	-18.5	-18.5	0.10 (1)	10.00	
R- Q	0 / 7226	-18.5	-18.5	0.13 (1)	10.00	
Q- P	0 / 12074	-18.5	-18.5	0.24 (1)	10.00	
P-AB	0 / 0	-18.5	-18.5	0.18 (1)	10.00	
AB- O	0 / 0	-18.5	-18.5	0.18 (1)	10.00	

WEBS

MEMB. FR-TO	MAX. FACTORED FORCE (LBS)	MAX CSI (LC)
Z- C	-1107 / 0	0.02 (1)
C- Y	0 / 530	0.03 (1)
Y- D	-314 / 0	0.05 (1)
D- X	-177 / 0	0.03 (1)
X- E	0 / 246	0.01 (1)
E- V	0 / 2182	0.12 (1)
V- F	-1880 / 0	0.20 (1)
F- U	0 / 1444	0.08 (1)
U- G	-467 / 0	0.05 (1)
U- I	-969 / 0	0.12 (1)
T- I	0 / 330	0.02 (1)
T- J	-176 / 0	0.02 (1)
R- J	0 / 3968	0.21 (1)
R- K	-4485 / 0	0.70 (1)
Q- K	0 / 5017	0.27 (1)
Q- L	-6892 / 0	0.61 (1)
P- L	0 / 8825	0.22 (1)
B- Z	0 / 3114	0.17 (1)
P- M	0 / 12935	0.69 (1)

[M]

DESIGN CRITERIA

SPECIFIED LOADS:

TOP CH.	LL	=	38.3	PSF
	DL	=	6.0	PSF
BOT CH.	LL	=	0.0	PSF
	DL	=	7.4	PSF
TOTAL LOAD		=	51.6	PSF

SPACING = 24.0 IN. C/C

LOADING IN FLAT SECTION BASED ON A SLOPE OF 6.00/12

THIS TRUSS IS DESIGNED FOR RESIDENTIAL OR SMALL BUILDING REQUIREMENTS OF PART 9, NBCC 2015

THIS DESIGN COMPLIES WITH:
- PART 9 OF BCBC 2018 , NBC-2019AE
- PART 9 OF OBC 2012 (2019 AMENDMENT)
- CSA 086-14
- TPIC 2014.

(55 % OF 54.4 P.S.F. G.S.L. PLUS 8.4 P.S.F. RAIN LOAD) EQUALS 38.3 P.S.F. SPECIFIED ROOF LIVE LOAD

ALLOWABLE DEFL.(LL)= L/360 (1.20")
CALCULATED VERT. DEFL.(LL) = L/ 999 (0.07")
ALLOWABLE DEFL.(TL)= L/360 (1.20")
CALCULATED VERT. DEFL.(TL) = L/ 999 (0.12")

CSI: TC=0.33/1.00 (M-O:1) , BC=0.24/1.00 (P-Q:1) , WB=0.70/1.00 (K-R:1) , SSI=0.26/1.00 (O-P:1)

DOL LUMBER=1.00 NAIL=1.00 LS BEND=1.10 COMP=1.10 SHEAR=1.10 TENS= 1.10

COMPANION LIVE LOAD FACTOR = 1.00

AUTOSOLVE HEELS OFF

TRUSS PLATE MANUFACTURER IS NOT RESPONSIBLE FOR QUALITY CONTROL IN THE TRUSS MANUFACTURING PLANT .

NAIL VALUES

PLATE	GRIP(DRY) (PSI) MAX	MIN	SHEAR (PLI) MAX	MIN	SECTION (PLI) MAX	MIN
MT20	650	371	1747	788	1987	1873

PLATE PLACEMENT TOL. = 0.250 inches

PLATE ROTATION TOL. = 5.0 Deg.

JSI GRIP= 0.84 (Z) (INPUT = 0.90)
JSI METAL= 0.85 (M) (INPUT = 1.00)

CONTINUED ON PAGE 2

GIRDER NAILING ASSUMES NAILED HANGERS ARE FASTENED WITH MIN. 3-0 INCH NAILS.

PLATES (table is in inches)

JT	TYPE	PLATES	W	LEN	Y	X
B	TMVW-t	MT20	8.0	9.0	2.75	4.25
C	TMWW-t	MT20	6.0	12.0	3.00	3.50
D	TMWW-t	MT20	5.0	6.0	2.50	2.25
E	TTWW+m	MT20	6.0	7.0	3.25	1.50
F	TMWW+t	MT20	4.0	6.0		
G	TMW+w	MT20	4.0	6.0		
H	TS-t	MT20	5.0	6.0		
I	TMWW+t	MT20	4.0	6.0		
J	TTWW+m	MT20	6.0	7.0	3.25	1.50
K	TMWW-t	MT20	5.0	6.0	2.50	2.25
L	TMWW-t	MT20	6.0	12.0	3.00	3.50
M	TMVW-t	MT20	8.0	9.0	2.75	4.25
O	BMV1+t	MT20	6.0	10.0	Edge	0.50
P	BMWW-t	MT20	8.0	12.0	4.25	6.00
Q, R, X, Y						
Q	BMWW-t	MT20	5.0	6.0		
S	BS-t	MT20	5.0	6.0		
T	BMWW+t	MT20	4.0	6.0		
U	BMWWW-t	MT20	5.0	8.0		
V	BMWW+t	MT20	4.0	6.0		
W	BS-t	MT20	5.0	6.0		
Z	BMWW-t	MT20	8.0	12.0	4.25	6.00
AA	BMV1+t	MT20	6.0	10.0	5.50	

Edge - INDICATES REFERENCE CORNER OF PLATE TOUCHES EDGE OF CHORD.

NOTES-

1) Lateral braces to be a minimum of 2X4 SPF #2.

SPECIFIED CONCENTRATED LOADS (LBS)

JT	LOC.	LC1	MAX-	MAX+	FACE	DIR.	TYPE	HEEL	CONN.
P	33-0-4	-8492	-8492	—	BACK	VERT	TOTAL	—	C1
AB	33-10-4	-1465	-1465	—	BACK	VERT	TOTAL	—	C1

CONNECTION REQUIREMENTS

1) **C1:** A SUITABLE HANGER/MECHANICAL CONNECTION IS REQUIRED.

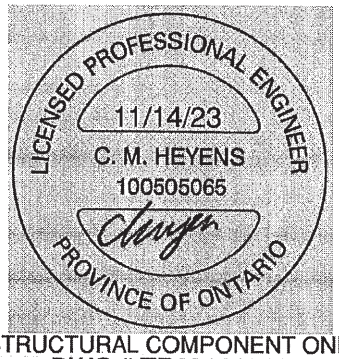

STRUCTURAL COMPONENT ONLY
DWG # TR23111080

JOB NAME	TRUSS NAME	QUANTITY	PLY	JOB DESC.	DRWG NO.
418649	T5	1	2	BAYVIEW WELLINGTON TRUSS DESC.	

Tamarack Roof Truss, Burlington

Version 8.630 S Aug 30 2023 MiTek Industries, Inc. Tue Nov 14 11:14:50 2023 Page 1
ID:UaoF4umx8QMX1bo7Q0Zg7Cya5EO-mjwgejgQGdIOLljEH3ynJ1YlDEQbB2AUEbolFdyJlQ3

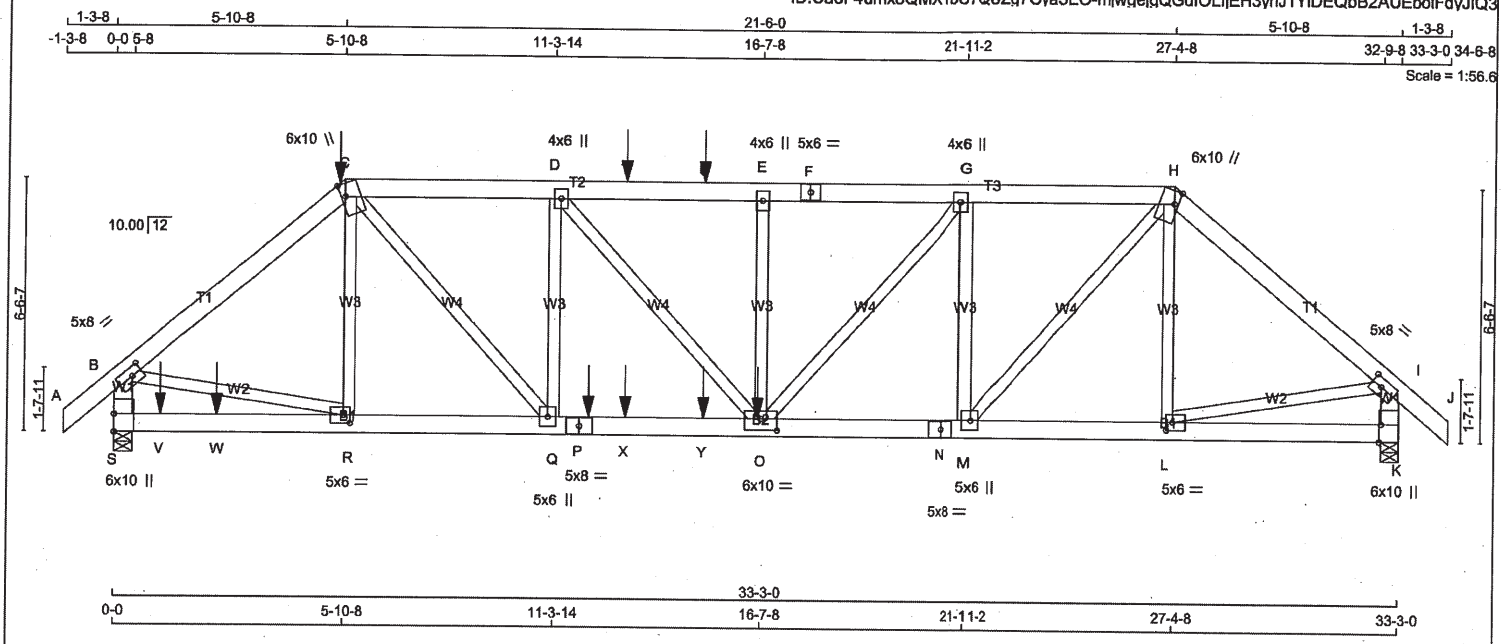

TOTAL WEIGHT = 2 X 215 = 431 lb [M]

LUMBER

N. L. G. A. RULES

CHORDS	SIZE		LUMBER	DESCR.
A - C	2x6	DRY	No.2	SPF
C - F	2x6	DRY	No.2	SPF
F - H	2x6	DRY	No.2	SPF
H - J	2x6	DRY	No.2	SPF
S - B	2x6	DRY	No.2	SPF
K - I	2x6	DRY	No.2	SPF
S - P	2x6	DRY	No.2	SPF
P - N	2x6	DRY	No.2	SPF
N - K	2x6	DRY	No.2	SPF
ALL WEBS EXCEPT	2x4	DRY	No.2	SPF

DRY: SEASONED LUMBER.

DESIGN CONSISTS OF 2 TRUSSES BUILT SEPARATELY THEN FASTENED TOGETHER AS FOLLOWS:

CHORDS	#ROWS	SURFACE SPACING (IN)	LOAD(PLF)
TOP CHORDS : (0.122"X3") SPIRAL NAILS			
A- C	2	12	SIDE(122.0)
C- F	2	12	SIDE(61.0)
F- H	2	12	TOP
H- J	2	12	TOP
S- B	2	12	TOP
K- I	2	12	TOP
BOTTOM CHORDS : (0.122"X3") SPIRAL NAILS			
S- P	2	12	SIDE(0.0)
P- N	2	12	SIDE(183.1)
N- K	2	12	TOP
WEBS : (0.122"X3") SPIRAL NAILS			
2x4	1	6	
E- O	1	6	SIDE(383.3)

NAILS TO BE DRIVEN FROM ONE SIDE ONLY.

GIRDER NAILING ASSUMES NAILED HANGERS ARE FASTENED WITH MIN. 3-0 INCH NAILS.

TOP - COMPONENTS ARE LOADED FROM THE TOP AND MUST BE PLACED ON TOP EDGE OF ALL PLIES FOR THE LOAD TO BE TRANSFERRED TO EACH PLY.

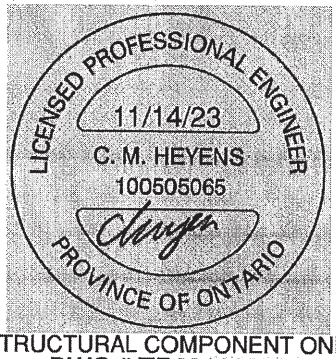

STRUCTURAL COMPONENT ONLY
DWG # TR23111081

DIMENSIONS, SUPPORTS AND LOADINGS SPECIFIED BY FABRICATOR TO BE VERIFIED BY BUILDING DESIGNER

BEARINGS

JT	FACTORED GROSS REACTION VERT	HORZ	MAXIMUM FACTORED GROSS REACTION DOWN	HORZ	UPLIFT	INPUT BRG IN-SX	REQRD BRG IN-SX
S	6942	0	6942	0	0	5-8	5-8
K	4644	0	4644	0	0	5-8	2-8

UNFACTORED REACTIONS

MAX./MIN. COMPONENT REACTIONS

JT	1ST LCASE COMBINED	SNOW	LIVE	PERM.LIVE	WIND	DEAD	SOIL
S	4812	3709 / 0	0 / 0	0 / 0	0 / 0	1103 / 0	0 / 0
K	3225	2450 / 0	0 / 0	0 / 0	0 / 0	776 / 0	0 / 0

BEARING MATERIAL TO BE SPF NO.2 OR BETTER AT JOINT(S) S, K

BRACING

TOP CHORD TO BE SHEATHED OR MAX. PURLIN SPACING = 3.91 FT.
MAX. UNBRACED BOTTOM CHORD LENGTH = 10.00 FT OR RIGID CEILING DIRECTLY APPLIED.

ALL PITCH BREAKS AND PERIMETER CORNER JOINTS MUST BE LATERALLY RESTRAINED.

LOADING

TOTAL LOAD CASES: (4)

CHORDS

MEMB. FR-TO	MAX. FACTORED FORCE (LBS)	FACTORED VERT. LOAD (PLF) FROM	TO	LC1	MAX CSI (LC)	MAX. UNBRAC LENGTH
A- B	0 / 60	-129.7	-129.7	0.05 (1)	10.00	
B- C	-6913 / 0	-129.7	-129.7	0.32 (1)	4.30	
C- D	-8020 / 0	-129.7	-129.7	0.24 (1)	4.11	
D- T	-8890 / 0	-129.7	-129.7	0.26 (1)	3.92	
T- U	-8890 / 0	-129.7	-129.7	0.26 (1)	3.92	
U- E	-8890 / 0	-129.7	-129.7	0.26 (1)	3.92	
E- F	-8890 / 0	-129.7	-129.7	0.27 (1)	3.91	
F- G	-8890 / 0	-129.7	-129.7	0.27 (1)	3.91	
G- H	-6784 / 0	-129.7	-129.7	0.21 (1)	4.44	
H- I	-5142 / 0	-129.7	-129.7	0.27 (1)	4.90	
I- J	0 / 60	-129.7	-129.7	0.05 (1)	10.00	
S- B	-5990 / 0	0.0	0.0	0.22 (1)	6.04	
K- I	-4601 / 0	0.0	0.0	0.17 (1)	6.73	
S- V	0 / 0	-18.5	-18.5	0.75 (1)	10.00	
V- W	0 / 0	-18.5	-18.5	0.75 (1)	10.00	
W- R	0 / 0	-18.5	-18.5	0.75 (1)	10.00	
R- Q	0 / 5297	-18.5	-18.5	0.66 (1)	10.00	
Q- P	0 / 8020	-18.5	-18.5	0.81 (1)	10.00	
P- X	0 / 8020	-18.5	-18.5	0.81 (1)	10.00	
X- Y	0 / 8020	-18.5	-18.5	0.81 (1)	10.00	
Y- O	0 / 8020	-18.5	-18.5	0.81 (1)	10.00	
O- N	0 / 6785	-18.5	-18.5	0.54 (1)	10.00	
N- M	0 / 6785	-18.5	-18.5	0.54 (1)	10.00	
M- L	0 / 3925	-18.5	-18.5	0.29 (1)	10.00	
L- K	0 / 0	-18.5	-18.5	0.04 (4)	10.00	

WEBS

MEMB. FR-TO	MAX. FACTORED FORCE (LBS)	MAX CSI (LC)
R- C	0 / 103	0.01 (4)
Q- D	-1751 / 0	0.39 (1)
Q- O	0 / 1323	0.12 (1)
O- E	-632 / 0	0.14 (1)
O- G	0 / 3202	0.28 (1)
M- G	-3166 / 0	0.71 (1)
M- H	0 / 4271	0.38 (1)
L- H	-583 / 0	0.13 (1)
B- R	0 / 5385	0.48 (1)
L- I	0 / 4006	0.35 (1)

SPECIFIED CONCENTRATED LOADS (LBS)

JT	LOC.	LC1	MAX-	MAX+	FACE	DIR.	TYPE	HEEL	CONN.
C	5-10-8	-58	-58	—	BACK	VERT	DEAD	—	C1
C	5-10-8	-368	-368	—	BACK	VERT	SNOW	—	C1
O	16-6-8	-1505	-1505	—	BACK	VERT	TOTAL	—	C1
P	12-2-8	-819	-819	—	BACK	VERT	TOTAL	—	C1
T	13-1-12	-10	-10	—	BACK	VERT	TOTAL	—	C1
U	15-1-12	-10	-10	—	BACK	VERT	TOTAL	—	C1
V	1-2-4	-193	-193	—	BACK	VERT	TOTAL	—	C1
W	2-7-8	-1000	-1000	—	BACK	VERT	TOTAL	—	C1
X	13-1-12	-193	-193	—	BACK	VERT	TOTAL	—	C1
Y	15-1-12	-193	-193	—	BACK	VERT	TOTAL	—	C1

DESIGN CRITERIA

*** SPECIAL LOADS ANALYSIS ***
GEOMETRY AND/OR BASIC LOADS CHANGED BY USER.
LOADS WERE DERIVED FROM USER INPUT
NO FURTHER MODIFICATIONS WERE MADE

SPECIFIED LOADS:

TOP CH.	LL	=	38.3	PSF
	DL	=	6.0	PSF
BOT CH.	LL	=	0.0	PSF
	DL	=	7.4	PSF
TOTAL LOAD		=	51.6	PSF

SPACING = 24.0 IN. C/C

LOADING IN FLAT SECTION BASED ON A SLOPE OF 6.00/12

*** NON STANDARD GIRDER ***
ADDT'L USER-DEFINED LOADS APPLIED TO ALL LOAD CASES.

THIS TRUSS IS DESIGNED FOR RESIDENTIAL OR SMALL BUILDING REQUIREMENTS OF PART 9, NBCC 2015

THIS DESIGN COMPLIES WITH:
- PART 9 OF BCBC 2018 , NBC-2019AE
- PART 9 OF OBC 2012 (2019 AMENDMENT)
- CSA 086-14
- TPIC 2014

(55 % OF 54.4 P.S.F. G.S.L. PLUS 8.4 P.S.F. RAIN LOAD) EQUALS 38.3 P.S.F. SPECIFIED ROOF LIVE LOAD

ALLOWABLE DEFL.(LL)= L/360 (1.11")
CALCULATED VERT. DEFL.(LL) = L/ 999 (0.17")
ALLOWABLE DEFL.(TL)= L/360 (1.11")
CALCULATED VERT. DEFL.(TL) = L/ 999 (0.29")

CSI: TC=0.32/1.00 (B-C:1) , BC=0.81/1.00 (O-Q:1) , WB=0.71/1.00 (G-M:1) , SSI=0.44/1.00 (O-Q:1)

DOL LUMBER=1.00 NAIL=1.00 LS BEND=1.00 COMP=1.00 SHEAR=1.00 TENS= 1.00

COMPANION LIVE LOAD FACTOR = 1.00

TRUSS PLATE MANUFACTURER IS NOT RESPONSIBLE FOR QUALITY CONTROL IN THE TRUSS MANUFACTURING PLANT .

NAIL VALUES

PLATE	GRIP(DRY) (PSI) MAX	MIN	SHEAR (PLI) MAX	MIN	SECTION (PLI) MAX	MIN
MT20	650	371	1747	788	1987	1873

PLATE PLACEMENT TOL. = 0.250 inches

PLATE ROTATION TOL. = 5.0 Deg.

JSI GRIP= 0.90 (G) (INPUT = 0.90)
JSI METAL= 0.98 (P) (INPUT = 1.00)

CONTINUED ON PAGE 2

JOB NAME	TRUSS NAME	QUANTITY	PLY	JOB DESC.	DRWG NO.
418649	T5	1	2	BAYVIEW WELLINGTON TRUSS DESC.	

Tamarack Roof Truss, Burlington

Version 8.630 S Aug 30 2023 MiTek Industries, Inc. Tue Nov 14 11:14:51 2023 Page 2
ID:UaoF4umx8QMX1bo7Q0Zg7Cya5EO-EvU2r3h31xQFzSIQqmT0rF5wzemqwVQdTFXIn3yJIQ2

PLATES (table is in inches)

JT	TYPE	PLATES	W	LEN	Y	X
B	TMVW-t	MT20	5.0	8.0	2.50	3.25
C	TTWW+m	MT20	6.0	10.0	4.00	1.25
D	TMWW+t	MT20	4.0	6.0		
E	TMW+w	MT20	4.0	6.0		
F	TS-t	MT20	5.0	6.0		
G	TMWW+t	MT20	4.0	6.0		
H	TTWW+m	MT20	6.0	10.0	4.00	1.25
I	TMVW-t	MT20	5.0	8.0	2.50	3.25
K	BMV1+t	MT20	6.0	10.0	Edge	0.50
L	BMWW-t	MT20	5.0	6.0	2.50	2.00
M	BMWW+t	MT20	5.0	6.0		
N	BS-t	MT20	5.0	8.0		
O	BMWWW-t	MT20	6.0	10.0	3.50	5.00
P	BS-t	MT20	5.0	8.0		
Q	BMWW+t	MT20	5.0	6.0		
R	BMWW-t	MT20	5.0	6.0	2.50	2.00
S	BMV1+t	MT20	6.0	10.0	5.50	

Edge - INDICATES REFERENCE CORNER OF PLATE TOUCHES EDGE OF CHORD.

NOTES-

1) Lateral braces to be a minimum of 2X4 SPF #2.

CONNECTION REQUIREMENTS

1) **C1:** A SUITABLE HANGER/MECHANICAL CONNECTION IS REQUIRED.

LICENSED PROFESSIONAL ENGINEER
11/14/23
C. M. HEYENS
100505065
PROVINCE OF ONTARIO

STRUCTURAL COMPONENT ONLY
DWG # TR23111081

JOB NAME	TRUSS NAME	QUANTITY	PLY	JOB DESC.	DRWG NO.
418649	T6	1	1	BAYVIEW WELLINGTON TRUSS DESC.	

Tamarack Roof Truss, Burlington

Version 8.630 S Aug 30 2023 MiTek Industries, Inc. Tue Nov 14 11:14:51 2023 Page 1
ID:UaoF4umx8QMX1bo7Q0Zg7Cya5EO-EvU2r3h31xQFzSIQqmT0rF5o8er4wZLdTFXIn3yJIQ2

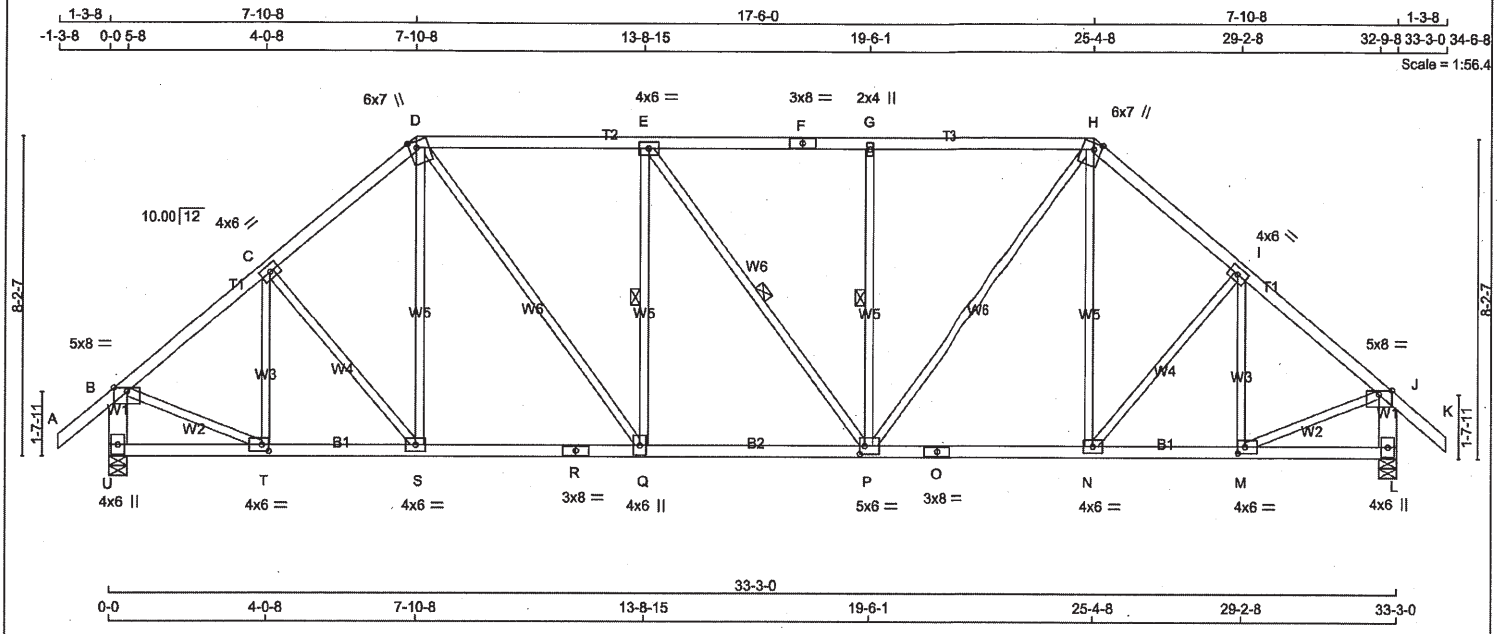

TOTAL WEIGHT = 161 lb

LUMBER

N. L. G. A. RULES

CHORDS	SIZE		LUMBER	DESCR.
A - D	2x4	DRY	No.2	SPF
D - F	2x4	DRY	No.2	SPF
F - H	2x4	DRY	No.2	SPF
H - K	2x4	DRY	No.2	SPF
U - B	2x6	DRY	No.2	SPF
L - J	2x6	DRY	No.2	SPF
U - R	2x4	DRY	No.2	SPF
R - O	2x4	DRY	No.2	SPF
O - L	2x4	DRY	No.2	SPF
ALL WEBS EXCEPT	2x3	DRY	No.2	SPF

DRY: SEASONED LUMBER.

PLATES (table is in inches)

JT	TYPE	PLATES	W	LEN	Y	X
B C, E, I	TMVW-p	MT20	5.0	8.0	Edge	
C	TMWW-t	MT20	4.0	6.0		
D	TTWW+m	MT20	6.0	7.0	2.00	2.25
F	TS-t	MT20	3.0	8.0		
G	TMW+w	MT20	2.0	4.0		
H	TTWW+m	MT20	6.0	7.0	2.00	2.25
J	TMVW-p	MT20	5.0	8.0	Edge	
L	BMV1+p	MT20	4.0	6.0		
M	BMWW-t	MT20	4.0	6.0	2.00	2.25
N	BMWW-t	MT20	4.0	6.0		
O	BS-t	MT20	3.0	8.0		
P	BMWWW-t	MT20	5.0	6.0	2.50	1.50
Q	BMWW+t	MT20	4.0	6.0		
R	BS-t	MT20	3.0	8.0		
S	BMWW-t	MT20	4.0	6.0		
T	BMWW-t	MT20	4.0	6.0	2.00	2.25
U	BMV1+p	MT20	4.0	6.0		

Edge - INDICATES REFERENCE CORNER OF PLATE TOUCHES EDGE OF CHORD.

NOTES-

1) Lateral braces to be a minimum of 2X4 SPF #2.

LICENSED PROFESSIONAL ENGINEER
11/14/23
C. M. HEYENS
100505065
PROVINCE OF ONTARIO

STRUCTURAL COMPONENT ONLY
DWG # TR23111082

DIMENSIONS, SUPPORTS AND LOADINGS SPECIFIED BY FABRICATOR TO BE VERIFIED BY BUILDING DESIGNER

BEARINGS

JT	FACTORED GROSS REACTION VERT	HORZ	MAXIMUM FACTORED GROSS REACTION DOWN	HORZ	UPLIFT	INPUT BRG IN-SX	REQRD BRG IN-SX
U	2644	0	2644	0	0	5-8	3-2
L	2644	0	2644	0	0	5-8	3-2

UNFACTORED REACTIONS

JT	1ST LCASE COMBINED	MAX./MIN. COMPONENT REACTIONS SNOW	LIVE	PERM.LIVE	WIND	DEAD	SOIL
U	1839	1377 / 0	0 / 0	0 / 0	0 / 0	462 / 0	0 / 0
L	1839	1377 / 0	0 / 0	0 / 0	0 / 0	462 / 0	0 / 0

BEARING MATERIAL TO BE SPF NO.2 OR BETTER AT JOINT(S) U, L

BRACING

TOP CHORD TO BE SHEATHED OR MAX. PURLIN SPACING = 3.33 FT.
MAX. UNBRACED BOTTOM CHORD LENGTH = 10.00 FT OR RIGID CEILING DIRECTLY APPLIED.

ALL PITCH BREAKS AND PERIMETER CORNER JOINTS MUST BE LATERALLY RESTRAINED.

1 LATERAL BRACE(S) AT 1/ 2 LENGTH OF E-Q, E-P, G-P.

END VERTICAL(S) MUST BE SHEATHED OR HAVE BRACES AS INDICATED IN THE MAX. UNBRACED LENGTH COLUMN OF THE TABLE BELOW

LOADING

TOTAL LOAD CASES: (4)

CHORDS

MEMB. FR-TO	MAX. FACTORED FORCE (LBS)	FACTORED VERT. LOAD (PLF) FROM	TO	LC1	MAX CSI (LC)	MAX. UNBRAC LENGTH
A- B	0 / 58	-129.7	-129.7	0.18 (1)	10.00	
B- C	-2467 / 0	-129.7	-129.7	0.45 (1)	3.94	
C- D	-2495 / 0	-129.7	-129.7	0.45 (1)	3.92	
D- E	-2571 / 0	-129.7	-129.7	0.82 (1)	3.33	
E- F	-2569 / 0	-129.7	-129.7	0.81 (1)	3.33	
F- G	-2569 / 0	-129.7	-129.7	0.81 (1)	3.33	
G- H	-2569 / 0	-129.7	-129.7	0.81 (1)	3.36	
H- I	-2495 / 0	-129.7	-129.7	0.45 (1)	3.92	
I- J	-2467 / 0	-129.7	-129.7	0.45 (1)	3.94	
J- K	0 / 58	-129.7	-129.7	0.18 (1)	10.00	
U- B	-2608 / 0	0.0	0.0	0.18 (1)	6.44	
L- J	-2608 / 0	0.0	0.0	0.18 (1)	6.44	
U- T	0 / 0	-18.5	-18.5	0.06 (4)	10.00	
T- S	0 / 1924	-18.5	-18.5	0.37 (1)	10.00	
S- R	0 / 1883	-18.5	-18.5	0.37 (1)	10.00	
R- Q	0 / 1883	-18.5	-18.5	0.37 (1)	10.00	
Q- P	0 / 2571	-18.5	-18.5	0.48 (1)	10.00	
P- O	0 / 1883	-18.5	-18.5	0.36 (1)	10.00	
O- N	0 / 1883	-18.5	-18.5	0.36 (1)	10.00	
N- M	0 / 1924	-18.5	-18.5	0.37 (1)	10.00	
M- L	0 / 0	-18.5	-18.5	0.06 (4)	10.00	

WEBS

MEMB. FR-TO	MAX. FACTORED FORCE (LBS)	MAX CSI (LC)
S- D	0 / 148	0.04 (4)
D- Q	0 / 1154	0.26 (1)
Q- E	-817 / 0	0.35 (1)
E- P	-3 / 0	0.00 (1)
P- G	-816 / 0	0.35 (1)
P- H	0 / 1150	0.26 (1)
N- H	0 / 150	0.04 (4)
C- S	-66 / 0	0.04 (1)
T- C	-554 / 0	0.20 (1)
B- T	0 / 2021	0.45 (1)
N- I	-65 / 0	0.04 (1)
M- I	-555 / 0	0.20 (1)
M- J	0 / 2021	0.45 (1)

DESIGN CRITERIA

SPECIFIED LOADS:

TOP CH.	LL	=	38.3	PSF
	DL	=	6.0	PSF
BOT CH.	LL	=	0.0	PSF
	DL	=	7.4	PSF
TOTAL LOAD		=	51.6	PSF

SPACING = 24.0 IN. C/C

LOADING IN FLAT SECTION BASED ON A SLOPE OF 6.00/12

THIS TRUSS IS DESIGNED FOR RESIDENTIAL OR SMALL BUILDING REQUIREMENTS OF PART 9, NBCC 2015

THIS DESIGN COMPLIES WITH:
- PART 9 OF BCBC 2018 , NBC-2019AE
- PART 9 OF OBC 2012 (2019 AMENDMENT)
- CSA 086-14
- TPIC 2014

(55 % OF 54.4 P.S.F. G.S.L. PLUS 8.4 P.S.F. RAIN LOAD) EQUALS 38.3 P.S.F. SPECIFIED ROOF LIVE LOAD

ALLOWABLE DEFL.(LL)= L/360 (1.11")
CALCULATED VERT. DEFL.(LL) = L/ 999 (0.12")
ALLOWABLE DEFL.(TL)= L/360 (1.11")
CALCULATED VERT. DEFL.(TL) = L/ 999 (0.21")

CSI: TC=0.82/1.00 (D-E:1) , BC=0.48/1.00 (P-Q:1) , WB=0.45/1.00 (B-T:1) , SSI=0.35/1.00 (D-E:1)

DOL LUMBER=1.00 NAIL=1.00 LS BEND=1.10 COMP=1.10 SHEAR=1.10 TENS= 1.10

COMPANION LIVE LOAD FACTOR = 1.00

AUTOSOLVE HEELS OFF

TRUSS PLATE MANUFACTURER IS NOT RESPONSIBLE FOR QUALITY CONTROL IN THE TRUSS MANUFACTURING PLANT .

NAIL VALUES

PLATE	GRIP(DRY) (PSI) MAX	MIN	SHEAR (PLI) MAX	MIN	SECTION (PLI) MAX	MIN
MT20	650	371	1747	788	1987	1873

PLATE PLACEMENT TOL. = 0.250 inches

PLATE ROTATION TOL. = 5.0 Deg.

JSI GRIP= 0.87 (B) (INPUT = 0.90)
JSI METAL= 0.59 (O) (INPUT = 1.00)

JOB NAME	TRUSS NAME	QUANTITY	PLY	JOB DESC.	DRWG NO.
418649	T7A	4	1	BAYVIEW WELLINGTON TRUSS DESC.	

Tamarack Roof Truss, Burlington

Version 8.630 S Aug 30 2023 MiTek Industries, Inc. Tue Nov 14 11:14:53 2023 Page 1
ID:UaoF4umx8QMX1bo7Q0Zq7Cya5EO-AlcoGliJZYqzClSpyBWUwgA72SY OPtwwZ0PsyyJIQ0

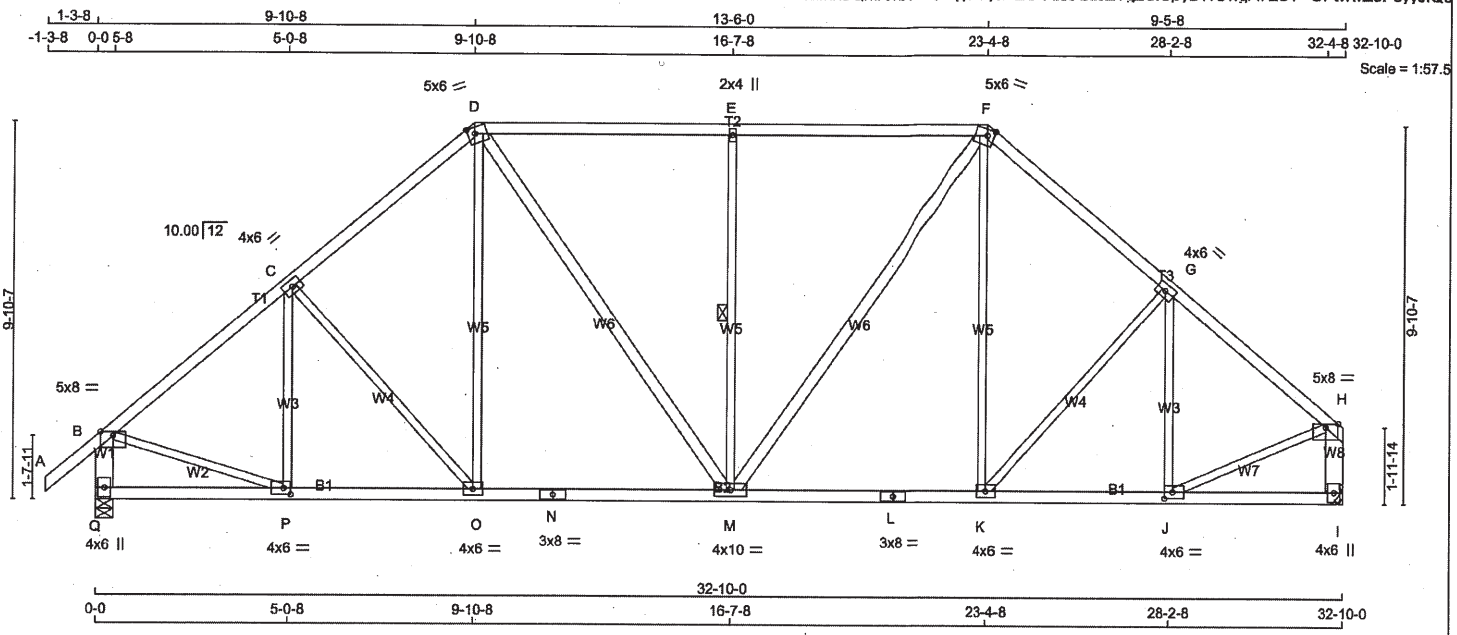

TOTAL WEIGHT = 4 X 165 = 662 lb

LUMBER
N. L. G. A. RULES

CHORDS	SIZE		LUMBER	DESCR.
A - D	2x4	DRY	No.2	SPF
D - F	2x4	DRY	No.2	SPF
F - H	2x4	DRY	No.2	SPF
Q - B	2x6	DRY	No.2	SPF
I - H	2x6	DRY	No.2	SPF
Q - N	2x4	DRY	No.2	SPF
N - L	2x4	DRY	No.2	SPF
L - I	2x4	DRY	No.2	SPF
ALL WEBS	2x3	DRY	No.2	SPF
EXCEPT				
D - M	2x4	DRY	No.2	SPF
M - F	2x4	DRY	No.2	SPF

DRY: SEASONED LUMBER.

PLATES (table is in inches)

JT	TYPE	PLATES	W	LEN	Y	X
B	TMVW-p	MT20	5.0	8.0	Edge	
C	TMWW-t	MT20	4.0	6.0		
D	TTWW-m	MT20	5.0	6.0	2.00	2.25
E	TMW+w	MT20	2.0	4.0		
F	TTWW-m	MT20	5.0	6.0	2.00	2.00
G	TMWW-t	MT20	4.0	6.0		
H	TMVW-p	MT20	5.0	8.0	Edge	
I	BMV1+p	MT20	4.0	6.0		
J	BMWW-t	MT20	4.0	6.0	2.00	2.50
K	BMWW-t	MT20	4.0	6.0		
L	BS-t	MT20	3.0	8.0		
M	BMWWW-t	MT20	4.0	10.0		
N	BS-t	MT20	3.0	8.0		
O	BMWW-t	MT20	4.0	6.0		
P	BMWW-t	MT20	4.0	6.0	2.00	2.25
Q	BMV1+p	MT20	4.0	6.0		

Edge - INDICATES REFERENCE CORNER OF PLATE TOUCHES EDGE OF CHORD.

NOTES-
1) Lateral braces to be a minimum of 2X4 SPF #2.

LICENSED PROFESSIONAL ENGINEER
11/14/23
C. M. HEYENS
100505065
PROVINCE OF ONTARIO

STRUCTURAL COMPONENT ONLY
DWG # TR23111083

DIMENSIONS, SUPPORTS AND LOADINGS SPECIFIED BY FABRICATOR TO BE VERIFIED BY BUILDING DESIGNER

BEARINGS

JT	FACTORED GROSS REACTION VERT	HORZ	MAXIMUM FACTORED GROSS REACTION DOWN	HORZ	UPLIFT	INPUT BRG IN-SX	REQRD BRG IN-SX
Q	2613	0	2613	0	0	5-8	3-0
I	2433	0	2433	0	0	MECHANICAL	

A SUITABLE HANGER/MECHANICAL CONNECTION IS REQUIRED AT JOINT I. MINIMUM BEARING LENGTH AT JOINT I = 2-10.

UNFACTORED REACTIONS

JT	1ST LCASE COMBINED	MAX./MIN. COMPONENT REACTIONS SNOW	LIVE	PERM.LIVE	WIND	DEAD	SOIL
Q	1818	1361 / 0	0 / 0	0 / 0	0 / 0	457 / 0	0 / 0
I	1695	1255 / 0	0 / 0	0 / 0	0 / 0	440 / 0	0 / 0

BEARING MATERIAL TO BE SPF NO.2 OR BETTER AT JOINT(S) Q

BRACING
TOP CHORD TO BE SHEATHED OR MAX. PURLIN SPACING = 3.28 FT.
MAX. UNBRACED BOTTOM CHORD LENGTH = 10.00 FT OR RIGID CEILING DIRECTLY APPLIED.

ALL PITCH BREAKS AND PERIMETER CORNER JOINTS MUST BE LATERALLY RESTRAINED.

1 LATERAL BRACE(S) AT 1/ 2 LENGTH OF E-M.

END VERTICAL(S) MUST BE SHEATHED OR HAVE BRACES AS INDICATED IN THE MAX. UNBRACED LENGTH COLUMN OF THE TABLE BELOW

LOADING
TOTAL LOAD CASES: (4)

CHORDS

MEMB. FR-TO	MAX. FACTORED FORCE (LBS)	FACTORED VERT. LOAD LC1 (PLF) FROM	TO	MAX CSI (LC)	MAX. UNBRAC LENGTH
A- B	0 / 58	-129.7	-129.7	0.18 (1)	10.00
B- C	-2502 / 0	-129.7	-129.7	0.53 (1)	3.85
C- D	-2347 / 0	-129.7	-129.7	0.50 (1)	3.98
D- E	-2167 / 0	-129.7	-129.7	0.86 (1)	3.28
E- F	-2167 / 0	-129.7	-129.7	0.86 (1)	3.28
F- G	-2288 / 0	-129.7	-129.7	0.46 (1)	4.08
G- H	-2325 / 0	-129.7	-129.7	0.46 (1)	4.05
Q- B	-2571 / 0	0.0	0.0	0.18 (1)	6.47
I- H	-2396 / 0	0.0	0.0	0.18 (1)	6.65
Q- P	0 / 0	-18.5	-18.5	0.09 (4)	10.00
P- O	0 / 1959	-18.5	-18.5	0.39 (1)	10.00
O- N	0 / 1764	-18.5	-18.5	0.38 (1)	10.00
N- M	0 / 1764	-18.5	-18.5	0.38 (1)	10.00
M- L	0 / 1721	-18.5	-18.5	0.37 (1)	10.00
L- K	0 / 1721	-18.5	-18.5	0.37 (1)	10.00
K- J	0 / 1823	-18.5	-18.5	0.36 (1)	10.00
J- I	0 / 0	-18.5	-18.5	0.08 (4)	10.00

WEBS

MEMB. FR-TO	MAX. FACTORED FORCE (LBS)	MAX CSI (LC)
P- C	-415 / 0	0.22 (1)
C- O	-298 / 0	0.32 (1)
O- D	0 / 332	0.07 (1)
D- M	0 / 699	0.11 (1)
M- E	-1075 / 0	0.71 (1)
M- F	0 / 774	0.12 (1)
K- F	0 / 228	0.05 (1)
K- G	-158 / 0	0.17 (1)
J- G	-564 / 0	0.30 (1)
B- P	0 / 2024	0.46 (1)
J- H	0 / 1936	0.44 (1)

DESIGN CRITERIA

SPECIFIED LOADS:

TOP	CH.	LL	=	38.3	PSF
		DL	=	6.0	PSF
BOT	CH.	LL	=	0.0	PSF
		DL	=	7.4	PSF
TOTAL	LOAD		=	51.6	PSF

SPACING = 24.0 IN. C/C

LOADING IN FLAT SECTION BASED ON A SLOPE OF 6.00/12

THIS TRUSS IS DESIGNED FOR RESIDENTIAL OR SMALL BUILDING REQUIREMENTS OF PART 9, NBCC 2015

THIS DESIGN COMPLIES WITH:
- PART 9 OF BCBC 2018 , NBC-2019AE
- PART 9 OF OBC 2012 (2019 AMENDMENT)
- CSA 086-14
- TPIC 2014

(55 % OF 54.4 P.S.F. G.S.L. PLUS 8.4 P.S.F. RAIN LOAD) EQUALS 38.3 P.S.F. SPECIFIED ROOF LIVE LOAD

ALLOWABLE DEFL.(LL)= L/360 (1.09")
CALCULATED VERT. DEFL.(LL) = L/ 999 (0.09")
ALLOWABLE DEFL.(TL)= L/360 (1.09")
CALCULATED VERT. DEFL.(TL) = L/ 999 (0.17")

CSI: TC=0.86/1.00 (D-E:1) , BC=0.39/1.00 (O-P:1) , WB=0.71/1.00 (E-M:1) , SSI=0.43/1.00 (D-E:1)

DOL LUMBER=1.00 NAIL=1.00 LS BEND=1.10 COMP=1.10 SHEAR=1.10 TENS= 1.10

COMPANION LIVE LOAD FACTOR = 1.00

TRUSS PLATE MANUFACTURER IS NOT RESPONSIBLE FOR QUALITY CONTROL IN THE TRUSS MANUFACTURING PLANT .

NAIL VALUES

PLATE	GRIP(DRY) (PSI) MAX	MIN	SHEAR (PLI) MAX	MIN	SECTION (PLI) MAX	MIN
MT20	650	371	1747	788	1987	1873

PLATE PLACEMENT TOL. = 0.250 Inches

PLATE ROTATION TOL. = 5.0 Deg.

JSI GRIP= 0.90 (P) (INPUT = 0.90)
JSI METAL= 0.58 (L) (INPUT = 1.00)

JOB NAME	TRUSS NAME	QUANTITY	PLY	JOB DESC.	DRWG NO.
418649	T8AS	1	1	BAYVIEW WELLINGTON TRUSS DESC.	

Tamarack Roof Truss, Burlington

Version 8.630 S Aug 30 2023 MiTek Industries, Inc. Tue Nov 14 11:14:54 2023 Page 1
ID:UaoF4umx8QMX1bo7Q0Zq7Cya5EO-eUABT4jxKspqqv1?Wu1jTtjlosu47rt49DmyOOyJlQ?

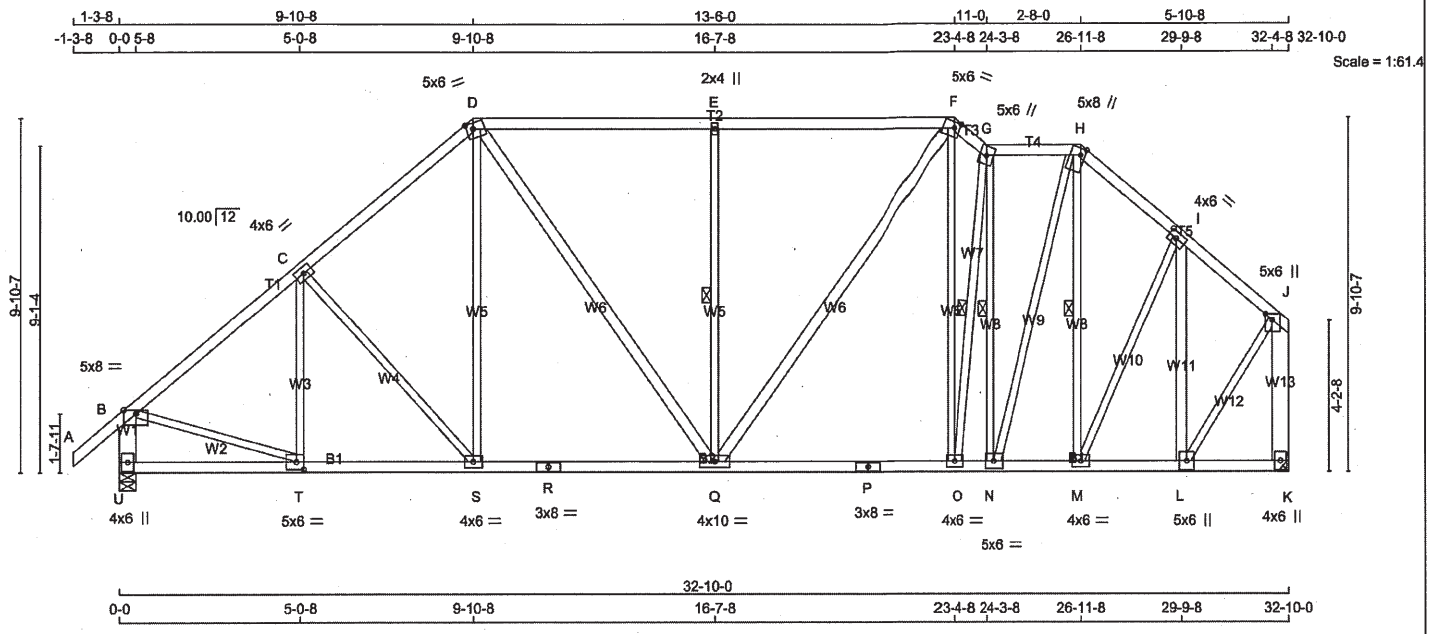

TOTAL WEIGHT = 200 lb

LUMBER
N. L. G. A. RULES

CHORDS	SIZE		LUMBER	DESCR.
A - D	2x4	DRY	No.2	SPF
D - F	2x4	DRY	No.2	SPF
F - G	2x4	DRY	No.2	SPF
G - H	2x4	DRY	No.2	SPF
H - J	2x4	DRY	No.2	SPF
U - B	2x6	DRY	No.2	SPF
K - J	2x6	DRY	No.2	SPF
U - R	2x4	DRY	No.2	SPF
R - P	2x4	DRY	No.2	SPF
P - K	2x4	DRY	No.2	SPF
ALL WEBS EXCEPT	2x3	DRY	No.2	SPF
D - Q	2x4	DRY	No.2	SPF
Q - F	2x4	DRY	No.2	SPF
L - I	2x4	DRY	No.2	SPF

DRY: SEASONED LUMBER.

PLATES (table is in inches)

JT	TYPE	PLATES	W	LEN	Y	X
B	TMVW-p	MT20	5.0	8.0	Edge	
C	TMWW-t	MT20	4.0	6.0		
D	TTWW-m	MT20	5.0	6.0	2.00	2.25
E	TMW+w	MT20	2.0	4.0		
F	TTWW-m	MT20	5.0	6.0	2.00	2.00
G	TTWW+m	MT20	5.0	6.0		
H	TTWW+m	MT20	5.0	8.0	2.25	1.50
I	TMWW-t	MT20	4.0	6.0	2.00	2.75
J	TMVW+p	MT20	5.0	6.0	2.00	2.25
K	BMV1+p	MT20	4.0	6.0		
L	BMWW+t	MT20	5.0	6.0		
M, O, S						
M	BMWW-t	MT20	4.0	6.0		
N	BMWW-t	MT20	5.0	6.0		
P	BS-t	MT20	3.0	8.0		
Q	BMWWW-t	MT20	4.0	10.0		
R	BS-t	MT20	3.0	8.0		
T	BMWW-t	MT20	5.0	6.0	2.50	2.50
U	BMV1+p	MT20	4.0	6.0		

Edge - INDICATES REFERENCE CORNER OF PLATE TOUCHES EDGE OF CHORD.

LICENSED PROFESSIONAL ENGINEER
11/14/23
C. M. HEYENS
100505065
PROVINCE OF ONTARIO

STRUCTURAL COMPONENT ONLY
DWG # TR23111084

DIMENSIONS, SUPPORTS AND LOADINGS SPECIFIED BY FABRICATOR TO BE VERIFIED BY BUILDING DESIGNER

BEARINGS

JT	FACTORED GROSS REACTION VERT	HORZ	MAXIMUM FACTORED GROSS REACTION DOWN	HORZ	UPLIFT	INPUT BRG IN-SX	REQRD BRG IN-SX
U	2613	0	2613	0	0	5-8	3-0
K	2433	0	2433	0	0	MECHANICAL	

A SUITABLE HANGER/MECHANICAL CONNECTION IS REQUIRED AT JOINT K. MINIMUM BEARING LENGTH AT JOINT K = 2-10.

UNFACTORED REACTIONS

JT	1ST LCASE COMBINED	MAX./MIN. COMPONENT REACTIONS SNOW	LIVE	PERM.LIVE	WIND	DEAD	SOIL
U	1818	1361 / 0	0 / 0	0 / 0	0 / 0	457 / 0	0 / 0
K	1695	1255 / 0	0 / 0	0 / 0	0 / 0	440 / 0	0 / 0

BEARING MATERIAL TO BE SPF NO.2 OR BETTER AT JOINT(S) U

BRACING
TOP CHORD TO BE SHEATHED OR MAX. PURLIN SPACING = 3.28 FT.
MAX. UNBRACED BOTTOM CHORD LENGTH = 10.00 FT OR RIGID CEILING DIRECTLY APPLIED.

ALL PITCH BREAKS AND PERIMETER CORNER JOINTS MUST BE LATERALLY RESTRAINED.

1 LATERAL BRACE(S) AT 1/ 2 LENGTH OF E-Q, G-O, G-N, H-M.

END VERTICAL(S) MUST BE SHEATHED OR HAVE BRACES AS INDICATED IN THE MAX. UNBRACED LENGTH COLUMN OF THE TABLE BELOW

LOADING
TOTAL LOAD CASES: (4)

CHORDS

MEMB. FR-TO	MAX. FACTORED FORCE (LBS)	FACTORED VERT. LOAD LC1 (PLF) FROM	TO	MAX CSI (LC)	MAX. UNBRAC LENGTH
A- B	0 / 58	-129.7	-129.7	0.18 (1)	10.00
B- C	-2503 / 0	-129.7	-129.7	0.53 (1)	3.85
C- D	-2347 / 0	-129.7	-129.7	0.50 (1)	3.98
D- E	-2168 / 0	-129.7	-129.7	0.86 (1)	3.28
E- F	-2168 / 0	-129.7	-129.7	0.86 (1)	3.28
F- G	-2239 / 0	-129.7	-129.7	0.06 (1)	4.53
G- H	-1734 / 0	-129.7	-129.7	0.15 (1)	4.93
H- I	-1788 / 0	-129.7	-129.7	0.18 (1)	4.85
I- J	-1365 / 0	-129.7	-129.7	0.16 (1)	5.40
U- B	-2572 / 0	0.0	0.0	0.18 (1)	6.47
K- J	-2409 / 0	0.0	0.0	0.49 (1)	6.64
U- T	0 / 0	-18.5	-18.5	0.10 (4)	10.00
T- S	0 / 1960	-18.5	-18.5	0.38 (1)	10.00
S- R	0 / 1764	-18.5	-18.5	0.39 (1)	10.00
R- Q	0 / 1764	-18.5	-18.5	0.39 (1)	10.00
Q- P	0 / 1716	-18.5	-18.5	0.39 (1)	10.00
P- O	0 / 1716	-18.5	-18.5	0.39 (1)	10.00
O- N	0 / 1750	-18.5	-18.5	0.31 (1)	10.00
N- M	0 / 1339	-18.5	-18.5	0.26 (1)	10.00
M- L	0 / 1071	-18.5	-18.5	0.21 (1)	10.00
L- K	0 / 0	-18.5	-18.5	0.04 (4)	10.00

WEBS

MEMB. FR-TO	MAX. FACTORED FORCE (LBS)	MAX CSI (LC)
T- C	-414 / 0	0.22 (1)
C- S	-299 / 0	0.32 (1)
S- D	0 / 329	0.07 (1)
D- Q	0 / 702	0.11 (1)
Q- E	-1075 / 0	0.71 (1)
Q- F	0 / 785	0.13 (1)
O- F	0 / 395	0.09 (1)
O- G	-327 / 0	0.18 (1)
N- G	-1340 / 0	0.72 (1)
N- H	0 / 1414	0.32 (1)
M- H	-535 / 0	0.29 (1)
B- T	0 / 2024	0.46 (1)
M- I	0 / 658	0.15 (1)
L- I	-1311 / 0	0.72 (1)
L- J	0 / 1734	0.39 (1)

NOTES-
1) Lateral braces to be a minimum of 2X4 SPF #2.

[M][F]

DESIGN CRITERIA

SPECIFIED LOADS:

TOP CH.	LL	=	38.3	PSF
	DL	=	6.0	PSF
BOT CH.	LL	=	0.0	PSF
	DL	=	7.4	PSF
TOTAL LOAD		=	51.6	PSF

SPACING = 24.0 IN. C/C

LOADING IN ALL FLAT SECTIONS BASED ON A SLOPE OF 6.00/12

THIS TRUSS IS DESIGNED FOR RESIDENTIAL OR SMALL BUILDING REQUIREMENTS OF PART 9, NBCC 2015

THIS DESIGN COMPLIES WITH:
- PART 9 OF BCBC 2018 , NBC-2019AE
- PART 9 OF OBC 2012 (2019 AMENDMENT)
- CSA 086-14
- TPIC 2014

(55 % OF 54.4 P.S.F. G.S.L. PLUS 8.4 P.S.F. RAIN LOAD) EQUALS 38.3 P.S.F. SPECIFIED ROOF LIVE LOAD

ALLOWABLE DEFL.(LL)= L/360 (1.09")
CALCULATED VERT. DEFL.(LL) = L/ 999 (0.11")
ALLOWABLE DEFL.(TL)= L/360 (1.09")
CALCULATED VERT. DEFL.(TL) = L/ 999 (0.21")

CSI: TC=0.86/1.00 (D-E:1) , BC=0.39/1.00 (Q-S:1) , WB=0.72/0.90 (G-N:1) , SSI=0.43/1.00 (D-E:1)

DOL LUMBER=1.00 NAIL=1.00 LS BEND=1.10 COMP=1.10 SHEAR=1.10 TENS= 1.10

COMPANION LIVE LOAD FACTOR = 1.00

AUTOSOLVE HEELS OFF

TRUSS PLATE MANUFACTURER IS NOT RESPONSIBLE FOR QUALITY CONTROL IN THE TRUSS MANUFACTURING PLANT .

NAIL VALUES

PLATE	GRIP(DRY) (PSI) MAX	MIN	SHEAR (PLI) MAX	MIN	SECTION (PLI) MAX	MIN
MT20	650	371	1747	788	1987	1873

PLATE PLACEMENT TOL. = 0.250 inches

PLATE ROTATION TOL. = 5.0 Deg.

JSI GRIP= 0.89 (D) (INPUT = 0.90)
JSI METAL= 0.64 (P) (INPUT = 1.00)

JOB NAME	TRUSS NAME	QUANTITY	PLY	JOB DESC.	DRWG NO.
418649	T9A	4	1	BAYVIEW WELLINGTON TRUSS DESC.	

Tamarack Roof Truss, Burlington

Version 8.630 S Aug 30 2023 MiTek Industries, Inc. Tue Nov 14 11:14:55 2023 Page 1
ID:UaoF4umx8QMX1bo7Q0Zg7Cya5EO-6gkZhQkZ5AxhS3cB3cYy05GYgFEYsHODOtVWwqyJIQ

Scale = 1:62.2

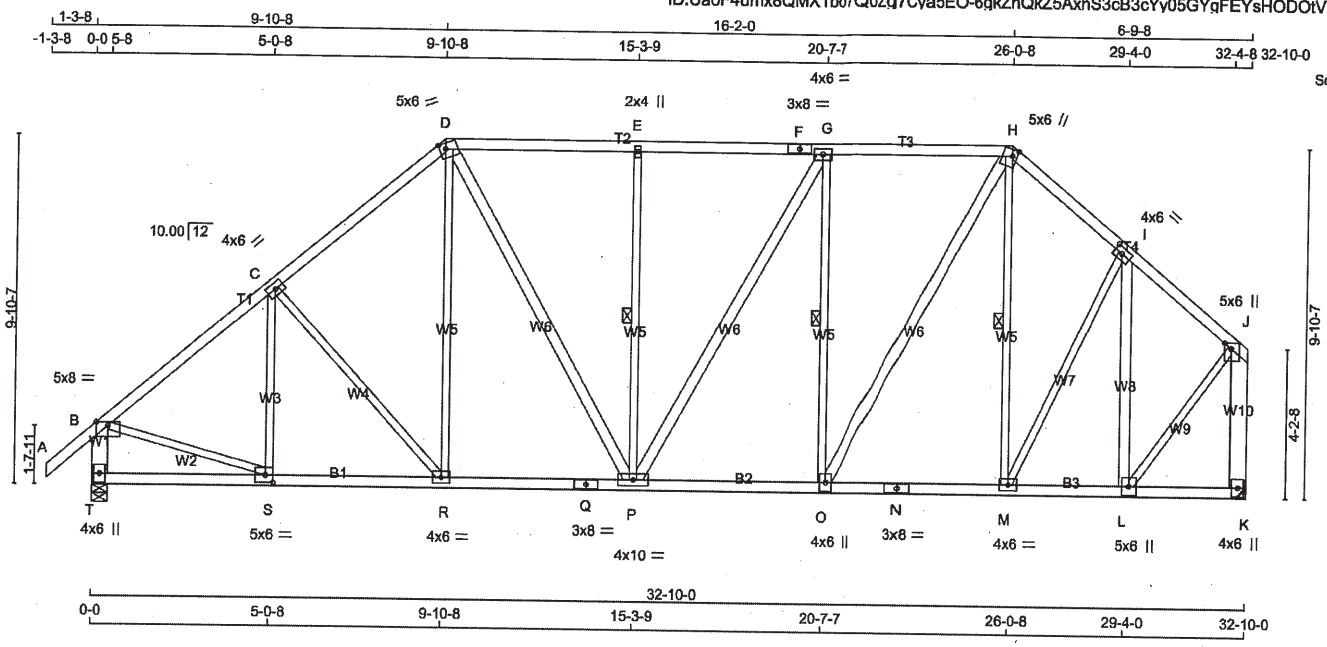

TOTAL WEIGHT = 4 X 190 = 761 lb

[M][F]

LUMBER

N. L. G. A. RULES

CHORDS	SIZE		LUMBER	DESCR.
A - D	2x4	DRY	No.2	SPF
D - F	2x4	DRY	No.2	SPF
F - H	2x4	DRY	No.2	SPF
H - J	2x4	DRY	No.2	SPF
T - B	2x6	DRY	No.2	SPF
K - J	2x6	DRY	No.2	SPF
T - Q	2x4	DRY	No.2	SPF
Q - N	2x4	DRY	No.2	SPF
N - K	2x4	DRY	No.2	SPF
ALL WEBS EXCEPT	2x3	DRY	No.2	SPF
D - P	2x4	DRY	No.2	SPF
P - G	2x4	DRY	No.2	SPF
O - H	2x4	DRY	No.2	SPF
L - I	2x4	DRY	No.2	SPF

DRY: SEASONED LUMBER.

PLATES (table is in inches)

JT	TYPE	PLATES	W	LEN	Y	X
B	TMVW-p	MT20	5.0	8.0	Edge	
C	TMWW-t	MT20	4.0	6.0		
D	TTWW-m	MT20	5.0	6.0	2.00	2.00
E	TMW+w	MT20	2.0	4.0		
F	TS-t	MT20	3.0	8.0		
G	TMWW-t	MT20	4.0	6.0		
H	TTWW+m	MT20	5.0	6.0	2.25	1.50
I	TMWW-t	MT20	4.0	6.0	2.00	2.75
J	TMVW+p	MT20	5.0	6.0	2.00	2.25
K	BMV1+p	MT20	4.0	6.0		
L	BMWW+t	MT20	5.0	6.0		
M	BMWW-t	MT20	4.0	6.0		
N	BS-t	MT20	3.0	8.0		
O	BMWW+t	MT20	4.0	6.0		
P	BMWWW-t	MT20	4.0	10.0		
Q	BS-t	MT20	3.0	8.0		
R	BMWW-t	MT20	4.0	6.0		
S	BMWW-t	MT20	5.0	6.0	2.50	2.50
T	BMV1+p	MT20	4.0	6.0		

Edge - INDICATES REFERENCE CORNER OF PLATE TOUCHES EDGE OF CHORD.

LICENSED PROFESSIONAL ENGINEER
11/14/23
C. M. HEYENS
100505065
PROVINCE OF ONTARIO

STRUCTURAL COMPONENT ONLY
DWG # TR23111085

DIMENSIONS, SUPPORTS AND LOADINGS SPECIFIED BY FABRICATOR TO BE VERIFIED BY BUILDING DESIGNER

BEARINGS

JT	FACTORED GROSS REACTION VERT	HORZ	MAXIMUM FACTORED GROSS REACTION DOWN	HORZ	UPLIFT	INPUT BRG	REQRD BRG
T	2613	0	2613	0	0	IN-SX	IN-SX
K	2433	0	2433	0	0	5-8	3-0
						MECHANICAL	

A SUITABLE HANGER/MECHANICAL CONNECTION IS REQUIRED AT JOINT K. MINIMUM BEARING LENGTH AT JOINT K = 2-10.

UNFACTORED REACTIONS

JT	1ST LCASE COMBINED	MAX./MIN. COMPONENT REACTIONS SNOW	LIVE	PERM.LIVE	WIND	DEAD	SOIL
T	1818	1361 / 0	0 / 0	0 / 0	0 / 0	457 / 0	0 / 0
K	1695	1255 / 0	0 / 0	0 / 0	0 / 0	440 / 0	0 / 0

BEARING MATERIAL TO BE SPF NO.2 OR BETTER AT JOINT(S) T

BRACING

TOP CHORD TO BE SHEATHED OR MAX. PURLIN SPACING = 3.85 FT.
MAX. UNBRACED BOTTOM CHORD LENGTH = 10.00 FT OR RIGID CEILING DIRECTLY APPLIED.

ALL PITCH BREAKS AND PERIMETER CORNER JOINTS MUST BE LATERALLY RESTRAINED.

1 LATERAL BRACE(S) AT 1/ 2 LENGTH OF E-P, G-O, H-M.

END VERTICAL(S) MUST BE SHEATHED OR HAVE BRACES AS INDICATED IN THE MAX. UNBRACED LENGTH COLUMN OF THE TABLE BELOW

LOADING

TOTAL LOAD CASES: (4)

CHORDS

MEMB. FR-TO	MAX. FACTORED FORCE (LBS)	FACTORED VERT. LOAD (PLF) FROM	TO	LC1	MAX CSI (LC)	MAX. UNBRAC LENGTH
A- B	0 / 58	-129.7	-129.7	0.18 (1)	10.00	
B- C	-2503 / 0	-129.7	-129.7	0.53 (1)	3.85	
C- D	-2346 / 0	-129.7	-129.7	0.50 (1)	3.98	
D- E	-2116 / 0	-129.7	-129.7	0.49 (1)	4.14	
E- F	-2116 / 0	-129.7	-129.7	0.46 (1)	4.19	
F- G	-2116 / 0	-129.7	-129.7	0.46 (1)	4.19	
G- H	-1991 / 0	-129.7	-129.7	0.48 (1)	4.26	
H- I	-1837 / 0	-129.7	-129.7	0.23 (1)	4.74	
I- J	-1463 / 0	-129.7	-129.7	0.22 (1)	5.19	
T- B	-2572 / 0	0.0	0.0	0.18 (1)	6.47	
K- J	-2405 / 0	0.0	0.0	0.49 (1)	6.65	
T- S	0 / 0	-18.5	-18.5	0.10 (4)	10.00	
S- R	0 / 1960	-18.5	-18.5	0.37 (1)	10.00	
R- Q	0 / 1763	-18.5	-18.5	0.34 (1)	10.00	
Q- P	0 / 1763	-18.5	-18.5	0.34 (1)	10.00	
P- O	0 / 1992	-18.5	-18.5	0.38 (1)	10.00	
O- N	0 / 1375	-18.5	-18.5	0.28 (1)	10.00	
N- M	0 / 1375	-18.5	-18.5	0.28 (1)	10.00	
M- L	0 / 1149	-18.5	-18.5	0.23 (1)	10.00	
L- K	0 / 0	-18.5	-18.5	0.05 (4)	10.00	

WEBS

MEMB. FR-TO	MAX. FACTORED FORCE (LBS)	MAX CSI (LC)
S- C	-411 / 0	0.22 (1)
C- R	-300 / 0	0.32 (1)
R- D	0 / 322	0.07 (1)
D- P	0 / 716	0.12 (1)
P- E	-753 / 0	0.50 (1)
P- G	0 / 257	0.04 (1)
O- G	-983 / 0	0.65 (1)
O- H	0 / 1249	0.20 (1)
M- H	-378 / 0	0.25 (1)
B- S	0 / 2024	0.46 (1)
M- I	0 / 514	0.12 (1)
L- I	-1208 / 0	0.77 (1)
L- J	0 / 1715	0.39 (1)

NOTES-

1) Lateral braces to be a minimum of 2X4 SPF #2.

DESIGN CRITERIA

SPECIFIED LOADS:

TOP CH.	LL	=	38.3	PSF
	DL	=	6.0	PSF
BOT CH.	LL	=	0.0	PSF
	DL	=	7.4	PSF
TOTAL LOAD		=	51.6	PSF

SPACING = 24.0 IN. C/C

LOADING IN FLAT SECTION BASED ON A SLOPE OF 6.00/12

THIS TRUSS IS DESIGNED FOR RESIDENTIAL OR SMALL BUILDING REQUIREMENTS OF PART 9, NBCC 2015

THIS DESIGN COMPLIES WITH:
- PART 9 OF BCBC 2018 , NBC-2019AE
- PART 9 OF OBC 2012 (2019 AMENDMENT)
- CSA 086-14
- TPIC 2014

(55 % OF 54.4 P.S.F. G.S.L. PLUS 8.4 P.S.F. RAIN LOAD) EQUALS 38.3 P.S.F. SPECIFIED ROOF LIVE LOAD

ALLOWABLE DEFL.(LL)= L/360 (1.09")
CALCULATED VERT. DEFL.(LL) = L/ 999 (0.10")
ALLOWABLE DEFL.(TL)= L/360 (1.09")
CALCULATED VERT. DEFL.(TL) = L/ 999 (0.16")

CSI: TC=0.53/1.00 (B-C:1) , BC=0.38/1.00 (O-P:1) , WB=0.77/1.00 (I-L:1) , SSI=0.33/1.00 (G-H:1)

DOL LUMBER=1.00 NAIL=1.00 LS BEND=1.10 COMP=1.10 SHEAR=1.10 TENS= 1.10

COMPANION LIVE LOAD FACTOR = 1.00

AUTOSOLVE HEELS OFF

TRUSS PLATE MANUFACTURER IS NOT RESPONSIBLE FOR QUALITY CONTROL IN THE TRUSS MANUFACTURING PLANT .

NAIL VALUES

PLATE	GRIP(DRY) (PSI) MAX	MIN	SHEAR (PLI) MAX	MIN	SECTION (PLI) MAX	MIN
MT20	650	371	1747	788	1987	1873

PLATE PLACEMENT TOL. = 0.250 inches

PLATE ROTATION TOL. = 5.0 Deg.

JSI GRIP= 0.88 (H) (INPUT = 0.90)
JSI METAL= 0.53 (Q) (INPUT = 1.00)

JOB NAME	TRUSS NAME	QUANTITY	PLY	JOB DESC.	DRWG NO.
418649	T10A	1	3	BAYVIEW WELLINGTON TRUSS DESC.	

Tamarack Roof Truss, Burlington

Version 8.630 S Aug 30 2023 MiTek Industries, Inc. Tue Nov 14 11:14:56 2023 Page 1
ID:UaoF4umx8QMX1bo7Q0Zq7Cya5EO-btlxumlBsT3Y3DBOdJ3BYlomOfa4bp?NcXF3SGyJIPz

Scale = 1:65.6

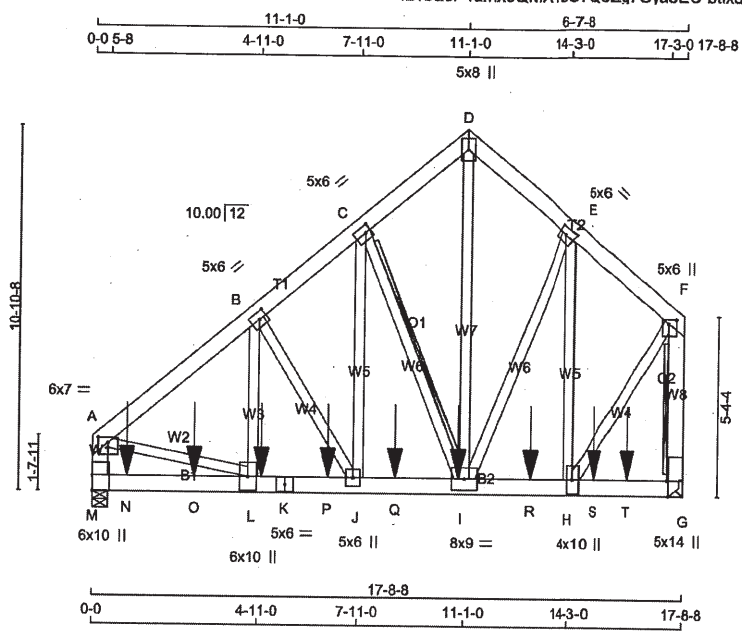

TOTAL WEIGHT = 3 X 153 = 460 lb [M]

LUMBER

N. L. G. A. RULES

CHORDS	SIZE		LUMBER	DESCR.
A - D	2x6	DRY	No.2	SPF
D - F	2x6	DRY	No.2	SPF
M - A	2x6	DRY	No.2	SPF
G - F	2x6	DRY	No.2	SPF
M - K	2x6	DRY	2100F 1.8E	SPF
K - G	2x6	DRY	2100F 1.8E	SPF
ALL WEBS EXCEPT	2x4	DRY	No.2	SPF

DRY: SEASONED LUMBER.

DESIGN CONSISTS OF 3 TRUSSES BUILT SEPARATELY THEN FASTENED TOGETHER AS FOLLOWS:

CHORDS	#ROWS	SURFACE SPACING (IN)	LOAD(PLF)
TOP CHORDS : (0.122"X3") SPIRAL NAILS			
A- D	2	12	TOP
D- F	2	12	TOP
M- A	2	12	TOP
G- F	2	12	TOP
BOTTOM CHORDS : (0.122"X3") SPIRAL NAILS			
M- K	2	6	SIDE(798.3)
K- G	2	5	SIDE(1259.8)
WEBS : (0.122"X3") SPIRAL NAILS			
2x4	1	6	

STAGGER NAILS BY HALF THE SURFACE SPACING IN ADJACENT PLIES.

GIRDER NAILING ASSUMES NAILED HANGERS ARE FASTENED WITH MIN. 3-0 INCH NAILS.

TOP - COMPONENTS ARE LOADED FROM THE TOP AND MUST BE PLACED ON TOP EDGE OF ALL PLIES FOR THE LOAD TO BE TRANSFERRED TO EACH PLY.

SIDE - PLF SHOWN IS THE EQUIVALENT UDL APPLIED TO ONE SIDE THAT THE CORRESPONDING NAILING PATTERN SHALL BE CAPABLE OF TRANSFERING. REMAINING PLF MUST BE APPLIED ON THE OPPOSITE SIDE OR ON THE TOP.

LICENSED PROFESSIONAL ENGINEER
11/14/23
C. M. HEYENS
100505065
PROVINCE OF ONTARIO

STRUCTURAL COMPONENT ONLY
DWG # TR23111086

DIMENSIONS, SUPPORTS AND LOADINGS SPECIFIED BY FABRICATOR TO BE VERIFIED BY BUILDING DESIGNER

BEARINGS

JT	FACTORED GROSS REACTION VERT	HORZ	MAXIMUM FACTORED GROSS REACTION DOWN	HORZ	UPLIFT	INPUT BRG IN-SX	REQRD BRG IN-SX
M	12135	0	12135	0	0	5-8	5-4
G	12221	0	12221	0	0	MECHANICAL	

A SUITABLE HANGER/MECHANICAL CONNECTION IS REQUIRED AT JOINT G. MINIMUM BEARING LENGTH AT JOINT G = 5-0.

UNFACTORED REACTIONS

JT	1ST LCASE COMBINED	MAX./MIN. COMPONENT REACTIONS SNOW	LIVE	PERM.LIVE	WIND	DEAD	SOIL
M	8447	6304 / 0	0 / 0	0 / 0	0 / 0	2143 / 0	0 / 0
G	8507	6349 / 0	0 / 0	0 / 0	0 / 0	2158 / 0	0 / 0

BEARING MATERIAL TO BE SPF NO.2 OR BETTER AT JOINT(S) M

BRACING

TOP CHORD TO BE SHEATHED OR MAX. PURLIN SPACING = 4.30 FT.
MAX. UNBRACED BOTTOM CHORD LENGTH = 10.00 FT OR RIGID CEILING DIRECTLY APPLIED.

ALL PITCH BREAKS AND PERIMETER CORNER JOINTS MUST BE LATERALLY RESTRAINED.

2x6 DRY SPF No.2 T-BRACE AT C-I, F-G

FASTEN T AND I-BRACES TO NARROW EDGE OF WEB WITH ONE ROW PER PLY OF 3" COMMON WIRE NAILS @ 6" O.C. WITH 3" MINIMUM END DISTANCE. BRACE MUST COVER 90% OF WEB LENGTH.

END VERTICAL(S) MUST BE SHEATHED OR HAVE BRACES AS INDICATED IN THE MAX. UNBRACED LENGTH COLUMN OF THE TABLE BELOW

LOADING

TOTAL LOAD CASES: (4)

CHORDS

MEMB. FR-TO	MAX. FACTORED FORCE (LBS)	FACTORED VERT. LOAD (PLF) FROM	TO	LC1	MAX CSI (LC)	MAX. UNBRAC LENGTH
A- B	-11444 / 0	-129.7	-129.7	0.17 (1)	4.30	
B- C	-9031 / 0	-129.7	-129.7	0.10 (1)	4.80	
C- D	-6562 / 0	-129.7	-129.7	0.08 (1)	5.46	
D- E	-6545 / 0	-129.7	-129.7	0.08 (1)	5.45	
E- F	-6244 / 0	-129.7	-129.7	0.09 (1)	5.54	
M- A	-9690 / 0	0.0	0.0	0.21 (1)	5.90	
G- F	-10913 / 0	0.0	0.0	0.34 (1)	7.81	
M- N	0 / 0	-18.5	-18.5	0.30 (1)	10.00	
N- O	0 / 0	-18.5	-18.5	0.30 (1)	10.00	
O- L	0 / 0	-18.5	-18.5	0.30 (1)	10.00	
L- K	0 / 8788	-18.5	-18.5	0.36 (1)	10.00	
K- P	0 / 8788	-18.5	-18.5	0.36 (1)	10.00	
P- J	0 / 8788	-18.5	-18.5	0.36 (1)	10.00	
J- Q	0 / 6923	-18.5	-18.5	0.27 (1)	10.00	
Q- I	0 / 6923	-18.5	-18.5	0.27 (1)	10.00	
I- R	0 / 4767	-18.5	-18.5	0.29 (1)	10.00	
R- H	0 / 4767	-18.5	-18.5	0.29 (1)	10.00	
H- S	0 / 0	-18.5	-18.5	0.26 (1)	10.00	
S- T	0 / 0	-18.5	-18.5	0.26 (1)	10.00	
T- G	0 / 0	-18.5	-18.5	0.26 (1)	10.00	

WEBS

MEMB. FR-TO	MAX. FACTORED FORCE (LBS)	MAX CSI (LC)
L- B	0 / 4035	0.22 (1)
B- J	-3546 / 0	0.49 (1)
J- C	0 / 5748	0.31 (1)
C- I	-4903 / 0	0.41 (1)
I- D	0 / 7918	0.42 (1)
I- E	0 / 770	0.04 (1)
H- E	-1260 / 0	0.35 (1)
A- L	0 / 9024	0.48 (1)
H- F	0 / 8187	0.44 (1)

SPECIFIED CONCENTRATED LOADS (LBS)

JT	LOC.	LC1	MAX-	MAX+	FACE	DIR.	TYPE	HEEL	CONN.
I	10-10-12	-1681	-1681	---	FRONT	VERT	TOTAL	--	C1
L	5-0-4	-1681	-1681	---	FRONT	VERT	TOTAL	--	C1
N	1-0-4	-1681	-1681	---	FRONT	VERT	TOTAL	--	C1
O	3-0-4	-1681	-1681	---	FRONT	VERT	TOTAL	--	C1
P	7-0-4	-1681	-1681	---	FRONT	VERT	TOTAL	--	C1

DESIGN CRITERIA

SPECIFIED LOADS:

TOP CH.	LL	=	38.3	PSF
	DL	=	6.0	PSF
BOT CH.	LL	=	0.0	PSF
	DL	=	7.4	PSF
TOTAL LOAD		=	51.6	PSF

SPACING = 24.0 IN. C/C

THIS TRUSS IS DESIGNED FOR RESIDENTIAL OR SMALL BUILDING REQUIREMENTS OF PART 9, NBCC 2015

THIS DESIGN COMPLIES WITH:
- PART 9 OF BCBC 2018 , NBC-2019AE
- PART 9 OF OBC 2012 (2019 AMENDMENT)
- CSA 086-14
- TPIC 2014

(55 % OF 54.4 P.S.F. G.S.L. PLUS 8.4 P.S.F. RAIN LOAD) EQUALS 38.3 P.S.F. SPECIFIED ROOF LIVE LOAD

ALLOWABLE DEFL.(LL)= L/360 (0.59")
CALCULATED VERT. DEFL.(LL) = L/ 999 (0.08")
ALLOWABLE DEFL.(TL)= L/360 (0.59")
CALCULATED VERT. DEFL.(TL) = L/ 999 (0.14")

CSI: TC=0.34/1.00 (F-G:1) , BC=0.36/1.00 (J-L:1) , WB=0.49/1.00 (B-J:1) , SSI=0.72/1.00 (G-H:1)

DOL LUMBER=1.00 NAIL=1.00 LS BEND=1.10 COMP=1.10 SHEAR=1.10 TENS= 1.10

COMPANION LIVE LOAD FACTOR = 1.00

TRUSS PLATE MANUFACTURER IS NOT RESPONSIBLE FOR QUALITY CONTROL IN THE TRUSS MANUFACTURING PLANT .

NAIL VALUES

PLATE	GRIP(DRY) (PSI) MAX	MIN	SHEAR (PLI) MAX	MIN	SECTION (PLI) MAX	MIN
MT20	650	371	1747	788	1987	1873

PLATE PLACEMENT TOL. = 0.250 inches

PLATE ROTATION TOL. = 5.0 Deg.

JSI GRIP= 0.90 (L) (INPUT = 0.90)
JSI METAL= 0.88 (L) (INPUT = 1.00)

CONTINUED ON PAGE 2

JOB NAME	TRUSS NAME	QUANTITY	PLY	JOB DESC.	DRWG NO.
418649	T10A	1	3	BAYVIEW WELLINGTON TRUSS DESC.	

Tamarack Roof Truss, Burlington

Version 8.630 S Aug 30 2023 MiTek Industries, Inc. Tue Nov 14 11:14:56 2023 Page 2
ID:UaoF4umx8QMX1bo7Q0Zq7Cya5EO-btlxumlBsT3Y3DBOdJ3BYlomOfa4bp?NcXF3SGyJIPz

PLATES (table is in inches)

JT	TYPE	PLATES	W	LEN	Y	X
A	TMVW-p	MT20	6.0	7.0	1.75	3.50
B	TMWW-t	MT20	5.0	6.0	2.50	2.75
C	TMWW-t	MT20	5.0	6.0	2.50	2.00
D	TTW+p	MT20	5.0	8.0		
E	TMWW-t	MT20	5.0	6.0	2.50	2.75
F	TMVW+p	MT20	5.0	6.0	1.50	2.75
G	BMV1+t	MT20	5.0	14.0	Edge	0.50
H	BMWW+t	MT20	4.0	10.0		
I	BMWWW-t	MT20	8.0	9.0		
J	BMWW+t	MT20	5.0	6.0		
K	BS-t	MT20	5.0	6.0		
L	BMWW+t	MT20	6.0	10.0		
M	BMV1+p	MT20	6.0	10.0	Edge	

Edge - INDICATES REFERENCE CORNER OF PLATE TOUCHES EDGE OF CHORD.

NOTES-

1) Lateral braces to be a minimum of 2X4 SPF #2.

SPECIFIED CONCENTRATED LOADS (LBS)

JT	LOC.	LC1	MAX-	MAX+	FACE	DIR.	TYPE	HEEL	CONN.
Q	9-0-4	-1681	-1681	—	FRONT	VERT	TOTAL	—	C1
R	13-0-4	-1681	-1681	—	FRONT	VERT	TOTAL	—	C1
S	15-0-4	-1681	-1681	—	FRONT	VERT	TOTAL	—	C1
T	16-0-4	-1681	-1681	—	FRONT	VERT	TOTAL	—	C1

CONNECTION REQUIREMENTS

1) **C1:** A SUITABLE HANGER/MECHANICAL CONNECTION IS REQUIRED.

LICENSED PROFESSIONAL ENGINEER
11/14/23
C. M. HEYENS
100505065
PROVINCE OF ONTARIO

STRUCTURAL COMPONENT ONLY
DWG # TR23111086

JOB NAME	TRUSS NAME	QUANTITY	PLY	JOB DESC.	DRWG NO.
418649	T11A	2	1	BAYVIEW WELLINGTON TRUSS DESC.	

Tamarack Roof Truss, Burlington

Version 8.630 S Aug 30 2023 MiTek Industries, Inc. Tue Nov 14 11:14:57 2023 Page 1
ID:UaoF4umx8QMX1bo7Q0Zq7Cya5EO-33rJ66mpcnBPhNmaB1aQ5WLwm3u6KEjWrA_d_jvJlPy

Scale = 1:62.8

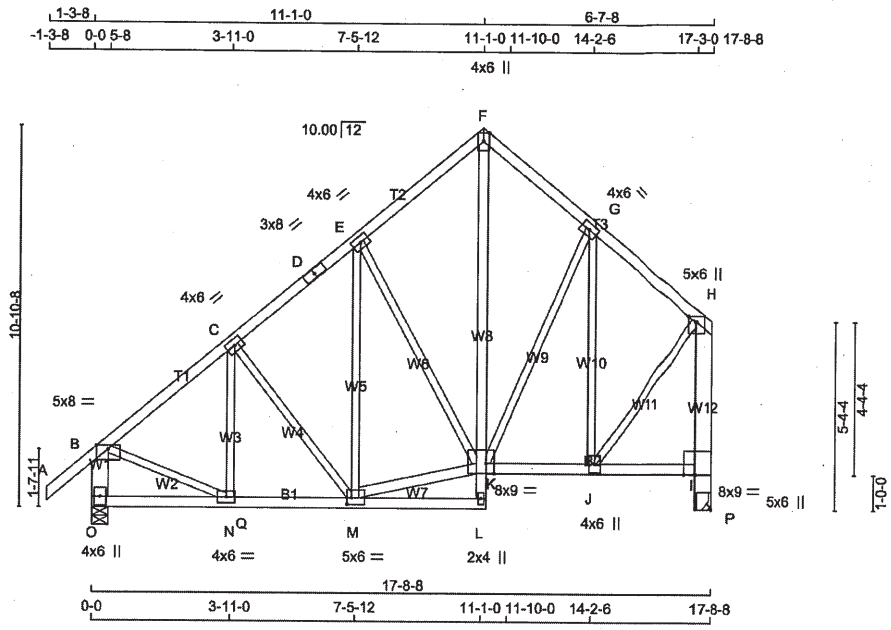

TOTAL WEIGHT = 2 X 114 = 229 lb [M]

LUMBER

N. L. G. A. RULES

CHORDS	SIZE		LUMBER	DESCR.
A - D	2x4	DRY	No.2	SPF
D - F	2x4	DRY	No.2	SPF
F - H	2x4	DRY	No.2	SPF
O - B	2x6	DRY	No.2	SPF
P - H	2x6	DRY	No.2	SPF
O - L	2x4	DRY	No.2	SPF
K - I	2x4	DRY	No.2	SPF
ALL WEBS	2x3	DRY	No.2	SPF
EXCEPT				
L - F	2x4	DRY	No.2	SPF
M - K	2x4	DRY	No.2	SPF

DRY: SEASONED LUMBER.

PLATES (table is in inches)

JT	TYPE	PLATES	W	LEN	Y	X
B	TMVW-p	MT20	5.0	8.0	Edge	
C, E, G						
C	TMWW-t	MT20	4.0	6.0		
D	TS-t	MT20	3.0	8.0		
F	TTW+p	MT20	4.0	6.0	Edge	
H	TMVW+p	MT20	5.0	6.0	2.00	2.25
I	BVM-I	MT20	8.0	9.0		3.50
J	BMWW+t	MT20	4.0	6.0		
K	BWMWWW*-I	MT20	8.0	9.0	3.50	2.75
L	BMW+w	MT20	2.0	4.0		
M	BMWWW-t	MT20	5.0	6.0	2.25	1.50
N	BMWW-t	MT20	4.0	6.0		
O	BMV1+p	MT20	4.0	6.0		
P	EBSP-t	MT20	5.0	6.0		

Edge - INDICATES REFERENCE CORNER OF PLATE TOUCHES EDGE OF CHORD.

NOTES-

1) Lateral braces to be a minimum of 2X4 SPF #2.

LICENSED PROFESSIONAL ENGINEER
11/14/23
C. M. HEYENS
100505065
PROVINCE OF ONTARIO

STRUCTURAL COMPONENT ONLY
DWG # TR23111087

DIMENSIONS, SUPPORTS AND LOADINGS SPECIFIED BY FABRICATOR TO BE VERIFIED BY BUILDING DESIGNER

BEARINGS

JT	FACTORED GROSS REACTION VERT	HORZ	MAXIMUM FACTORED GROSS REACTION DOWN	HORZ	UPLIFT	INPUT BRG IN-SX	REQRD BRG IN-SX
O	1851	0	1851	0	0	5-8	2-0
P	2018	0	2018	0	0	MECHANICAL	

A SUITABLE HANGER/MECHANICAL CONNECTION IS REQUIRED AT JOINT P. MINIMUM BEARING LENGTH AT JOINT P = 3-8.

UNFACTORED REACTIONS

JT	1ST LCASE COMBINED	MAX./MIN. COMPONENT REACTIONS SNOW	LIVE	PERM.LIVE	WIND	DEAD	SOIL
O	1324	783 / 0	0 / 0	0 / 0	0 / 0	541 / 0	0 / 0
P	1479	677 / 0	0 / 0	0 / 0	0 / 0	802 / 0	0 / 0

BEARING MATERIAL TO BE SPF NO.2 OR BETTER AT JOINT(S) O

BRACING

TOP CHORD TO BE SHEATHED OR MAX. PURLIN SPACING = 4.87 FT.
MAX. UNBRACED BOTTOM CHORD LENGTH = 10.00 FT OR RIGID CEILING DIRECTLY APPLIED.

MAX. UNBRACED INTERIOR CHORD LENGTH = 10.00 FT

ALL PITCH BREAKS AND PERIMETER CORNER JOINTS MUST BE LATERALLY RESTRAINED.

LOADING

TOTAL LOAD CASES: (4)

CHORDS

MEMB. FR-TO	MAX. FACTORED FORCE (LBS)	FACTORED VERT. LOAD (PLF) FROM	TO	LC1 MAX CSI (LC)	MAX. UNBRAC LENGTH
A- B	0 / 58	-129.7	-129.7	0.20 (1)	10.00
B- C	-1565 / 0	-129.7	-129.7	0.33 (1)	4.87
C- D	-1478 / 0	-129.7	-129.7	0.32 (1)	4.99
D- E	-1478 / 0	-129.7	-129.7	0.32 (1)	4.99
E- F	-1167 / 0	-129.7	-129.7	0.26 (1)	5.55
F- G	-1175 / 0	-129.7	-129.7	0.27 (1)	5.52
G- H	-1105 / 0	-129.7	-129.7	0.27 (1)	5.66
O- B	-1817 / 0	0.0	0.0	0.14 (1)	7.37
P- I	-2018 / 0	0.0	0.0	0.15 (1)	7.08
I- H	-1906 / 0	0.0	0.0	0.42 (1)	7.23
O- N	0 / 0	-18.5	-18.5	0.07 (4)	10.00
N- Q	0 / 1225	-18.5	-18.5	0.48 (4)	10.00
Q- M	0 / 1225	-18.5	-80.8	0.48 (4)	10.00
M- L	0 / 10	-80.8	-153.1	0.37 (4)	10.00
K- J	0 / 871	-145.0	-112.0	0.50 (4)	10.00
J- I	0 / 0	-112.0	-74.7	0.37 (4)	10.00

WEBS

MEMB. FR-TO	MAX. FACTORED FORCE (LBS)	MAX CSI (LC)
M- E	0 / 216	0.08 (4)
L- K	0 / 227	0.07 (4)
K- F	0 / 1119	0.22 (4)
M- K	0 / 1161	0.21 (1)
E- K	-526 / 0	0.59 (1)
K- G	-6 / 15	0.01 (4)
J- G	-545 / 0	0.52 (1)
J- H	0 / 1324	0.33 (1)
C- M	-153 / 33	0.09 (1)
N- C	-340 / 0	0.12 (1)
B- N	0 / 1291	0.32 (1)

DESIGN CRITERIA

*** SPECIAL LOADS ANALYSIS ***
GEOMETRY AND/OR BASIC LOADS CHANGED BY USER.
LOADS WERE DERIVED FROM USER INPUT
NO FURTHER MODIFICATIONS WERE MADE

SPECIFIED LOADS:

TOP CH.	LL	=	38.3	PSF
	DL	=	6.0	PSF
BOT CH.	LL	=	0.0	PSF
	DL	=	7.4	PSF
TOTAL LOAD		=	51.6	PSF

SPACING = 24.0 IN. C/C

*** NON STANDARD GIRDER ***
ADDT'L USER-DEFINED LOADS APPLIED TO ALL LOAD CASES.

THIS TRUSS IS DESIGNED FOR RESIDENTIAL OR SMALL BUILDING REQUIREMENTS OF PART 9, NBCC 2015

THIS DESIGN COMPLIES WITH:
- PART 9 OF BCBC 2018 , NBC-2019AE
- PART 9 OF OBC 2012 (2019 AMENDMENT)
- CSA 086-14
- TPIC 2014

(55 % OF 54.4 P.S.F. G.S.L. PLUS 8.4 P.S.F. RAIN LOAD) EQUALS 38.3 P.S.F. SPECIFIED ROOF LIVE LOAD

ALLOWABLE DEFL.(LL)= L/360 (0.59")
CALCULATED VERT. DEFL.(LL) = L/ 999 (0.02")
ALLOWABLE DEFL.(TL)= L/360 (0.59")
CALCULATED VERT. DEFL.(TL) = L/ 999 (0.09")

CSI: TC=0.42/1.00 (H-I:1) , BC=0.50/1.00 (J-K:4) , WB=0.59/1.00 (E-K:1) , SSI=0.35/1.00 (J-K:4)

DOL LUMBER=1.00 NAIL=1.00 LS BEND=1.00 COMP=1.00 SHEAR=1.00 TENS= 1.00

COMPANION LIVE LOAD FACTOR = 1.00

AUTOSOLVE HEELS OFF

TRUSS PLATE MANUFACTURER IS NOT RESPONSIBLE FOR QUALITY CONTROL IN THE TRUSS MANUFACTURING PLANT .

NAIL VALUES

PLATE	GRIP(DRY) (PSI) MAX	MIN	SHEAR (PLI) MAX	MIN	SECTION (PLI) MAX	MIN
MT20	650	371	1747	788	1987	1873

PLATE PLACEMENT TOL. = 0.250 Inches

PLATE ROTATION TOL. = 5.0 Deg.

JSI GRIP= 0.81 (M) (INPUT = 0.90)
JSI METAL= 0.39 (J) (INPUT = 1.00)

JOB NAME	TRUSS NAME	QUANTITY	PLY	JOB DESC.	DRWG NO.
418651	T12	2	1	BAYVIEW WELLINGTON TRUSS DESC.	

Tamarack Roof Truss, Burlington

Version 8.630 S Aug 30 2023 MiTek Industries, Inc. Tue Nov 14 12:09:18 2023 Page 1
ID:UaoF4umx8QMX1bo7Q0Zq7Cya5EO-4QO6W9DKej1iPWZJjOb8lBvElbzPuDBVj1QgyCyJHd?

Scale = 1:32.5

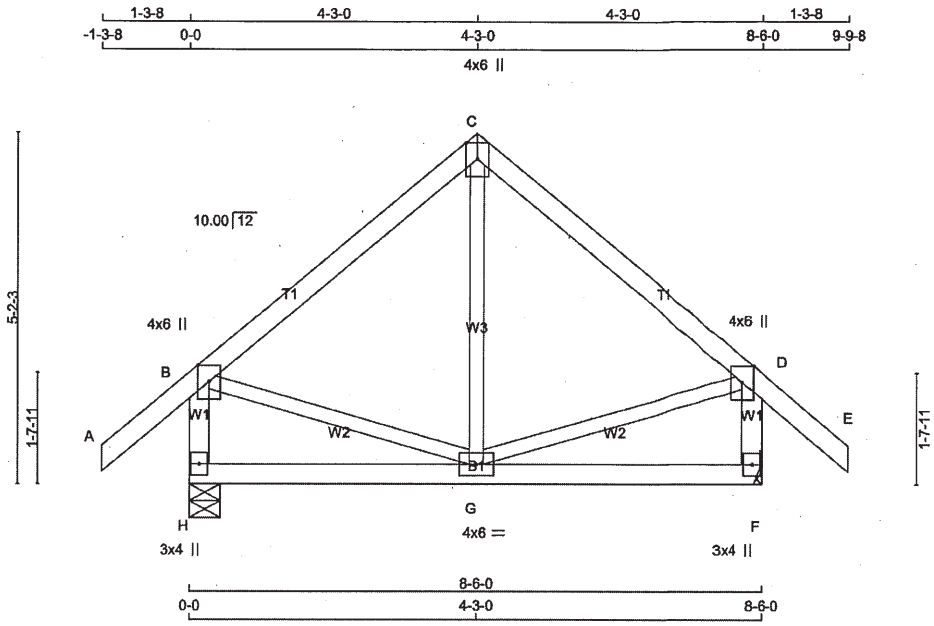

TOTAL WEIGHT = 2 X 40 = 79 lb

LUMBER
N. L. G. A. RULES

CHORDS	SIZE		LUMBER	DESCR.
A - C	2x4	DRY	No.2	SPF
C - E	2x4	DRY	No.2	SPF
H - B	2x4	DRY	No.2	SPF
F - D	2x4	DRY	No.2	SPF
H - F	2x4	DRY	No.2	SPF
ALL WEBS EXCEPT	2x3	DRY	No.2	SPF

DRY: SEASONED LUMBER.

PLATES (table is in inches)

JT	TYPE	PLATES	W	LEN	Y	X
B	TMVW+p	MT20	4.0	6.0	Edge	
C	TTW+p	MT20	4.0	6.0	Edge	
D	TMVW+p	MT20	4.0	6.0	Edge	
F	BMV1+p	MT20	3.0	4.0		
G	BMWWW-t	MT20	4.0	6.0		
H	BMV1+p	MT20	3.0	4.0		

Edge - INDICATES REFERENCE CORNER OF PLATE TOUCHES EDGE OF CHORD.

NOTES-
1) Lateral braces to be a minimum of 2X4 SPF #2.

LICENSED PROFESSIONAL ENGINEER
11/14/23
C. M. HEYENS
100505065
PROVINCE OF ONTARIO

STRUCTURAL COMPONENT ONLY
DWG # TR23111108

DIMENSIONS, SUPPORTS AND LOADINGS SPECIFIED BY FABRICATOR TO BE VERIFIED BY BUILDING DESIGNER

BEARINGS

JT	FACTORED GROSS REACTION VERT	HORZ	MAXIMUM FACTORED GROSS REACTION DOWN	HORZ	UPLIFT	INPUT BRG IN-SX	REQRD BRG IN-SX
H	810	0	810	0	0	5-8	1-8
F	810	0	810	0	0	MECHANICAL	

A SUITABLE HANGER/MECHANICAL CONNECTION IS REQUIRED AT JOINT F. MINIMUM BEARING LENGTH AT JOINT F = 1-8.

UNFACTORED REACTIONS

JT	1ST LCASE COMBINED	MAX./MIN. COMPONENT REACTIONS SNOW	LIVE	PERM.LIVE	WIND	DEAD	SOIL
H	561	431 / 0	0 / 0	0 / 0	0 / 0	131 / 0	0 / 0
F	561	431 / 0	0 / 0	0 / 0	0 / 0	131 / 0	0 / 0

BEARING MATERIAL TO BE SPF NO.2 OR BETTER AT JOINT(S) H

BRACING
TOP CHORD TO BE SHEATHED OR MAX. PURLIN SPACING = 6.25 FT.
MAX. UNBRACED BOTTOM CHORD LENGTH = 10.00 FT OR RIGID CEILING DIRECTLY APPLIED.

ALL PITCH BREAKS AND PERIMETER CORNER JOINTS MUST BE LATERALLY RESTRAINED.

LOADING
TOTAL LOAD CASES: (4)

CHORDS

MEMB. FR-TO	MAX. FACTORED FORCE (LBS)	FACTORED VERT. LOAD LC1 (PLF) FROM	TO	MAX CSI (LC)	MAX. UNBRAC LENGTH
A- B	0 / 58	-129.7	-129.7	0.18 (1)	10.00
B- C	-369 / 0	-129.7	-129.7	0.30 (1)	6.25
C- D	-369 / 0	-129.7	-129.7	0.30 (1)	6.25
D- E	0 / 58	-129.7	-129.7	0.18 (1)	10.00
H- B	-779 / 0	0.0	0.0	0.08 (1)	7.81
F- D	-779 / 0	0.0	0.0	0.08 (1)	7.81
H- G	0 / 0	-18.5	-18.5	0.09 (4)	10.00
G- F	0 / 0	-18.5	-18.5	0.09 (4)	10.00

WEBS

MEMB. FR-TO	MAX. FACTORED FORCE (LBS)	MAX CSI (LC)
G- C	-78 / 61	0.03 (1)
B- G	0 / 297	0.07 (1)
G- D	0 / 297	0.07 (1)

[M][F]

DESIGN CRITERIA

SPECIFIED LOADS:

TOP CH.	LL	=	38.3	PSF
	DL	=	6.0	PSF
BOT CH.	LL	=	0.0	PSF
	DL	=	7.4	PSF
TOTAL LOAD		=	51.6	PSF

SPACING = 24.0 IN. C/C

THIS TRUSS IS DESIGNED FOR RESIDENTIAL OR SMALL BUILDING REQUIREMENTS OF PART 9, NBCC 2015

THIS DESIGN COMPLIES WITH:
- PART 9 OF BCBC 2018 , NBC-2019AE
- PART 9 OF OBC 2012 (2019 AMENDMENT)
- CSA 086-14
- TPIC 2014

(55 % OF 54.4 P.S.F. G.S.L. PLUS 8.4 P.S.F. RAIN LOAD) EQUALS 38.3 P.S.F. SPECIFIED ROOF LIVE LOAD

ALLOWABLE DEFL.(LL)= L/360 (0.28")
CALCULATED VERT. DEFL.(LL) = L/ 999 (0.00")
ALLOWABLE DEFL.(TL)= L/360 (0.28")
CALCULATED VERT. DEFL.(TL) = L/ 999 (0.01")

CSI: TC=0.30/1.00 (B-C:1) , BC=0.09/1.00 (F-G:4) , WB=0.07/1.00 (D-G:1) , SSI=0.17/1.00 (B-C:1)

DOL LUMBER=1.00 NAIL=1.00 LS BEND=1.10 COMP=1.10 SHEAR=1.10 TENS= 1.10

COMPANION LIVE LOAD FACTOR = 1.00

AUTOSOLVE HEELS OFF

TRUSS PLATE MANUFACTURER IS NOT RESPONSIBLE FOR QUALITY CONTROL IN THE TRUSS MANUFACTURING PLANT .

NAIL VALUES

PLATE	GRIP(DRY) (PSI) MAX	MIN	SHEAR (PLI) MAX	MIN	SECTION (PLI) MAX	MIN
MT20	650	371	1747	788	1987	1873

PLATE PLACEMENT TOL. = 0.250 inches

PLATE ROTATION TOL. = 5.0 Deg.

JSI GRIP= 0.49 (B) (INPUT = 0.90)
JSI METAL= 0.27 (D) (INPUT = 1.00)

JOB NAME	TRUSS NAME	QUANTITY	PLY	JOB DESC.	DRWG NO.
418649	G12	1	1	BAYVIEW WELLINGTON TRUSS DESC.	

Tamarack Roof Truss, Burlington

Version 8.630 S Aug 30 2023 MiTek Industries, Inc. Tue Nov 14 11:14:25 2023 Page 1
ID:UaoF4umx8QMX1bo7Q0Zq7Cya5EO-?vwDOANI9y9xrSJQJJ?wom0Wh946quxpUCEwsZyJIQS

Scale: 3/8"=1'

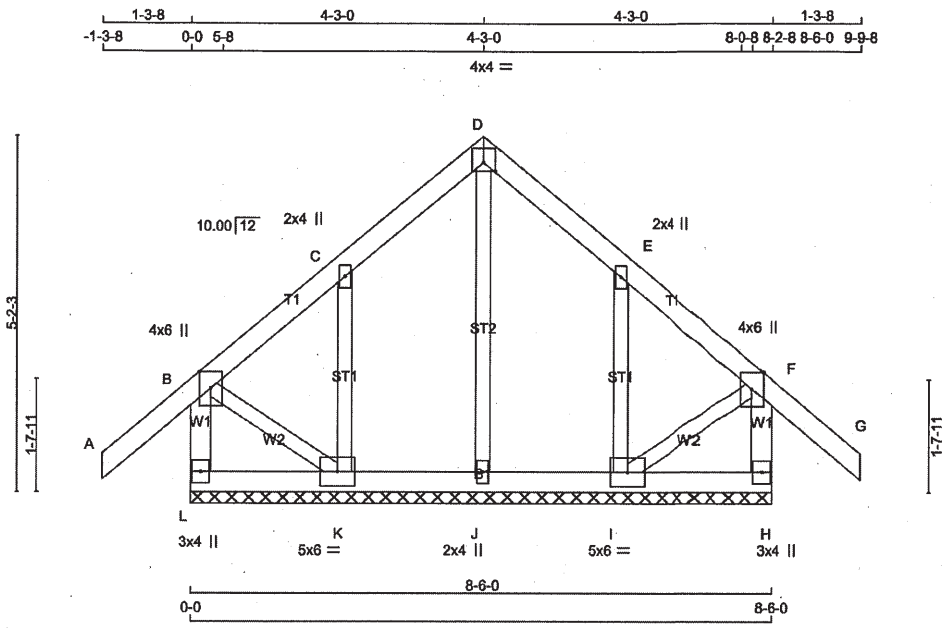

TOTAL WEIGHT = 42 lb

LUMBER
N. L. G. A. RULES

CHORDS	SIZE		LUMBER	DESCR.
L - B	2x4	DRY	No.2	SPF
A - D	2x4	DRY	No.2	SPF
D - G	2x4	DRY	No.2	SPF
H - F	2x4	DRY	No.2	SPF
L - H	2x4	DRY	No.2	SPF
ALL WEBS	2x3	DRY	No.2	SPF
ALL GABLE WEBS	2x3	DRY	No.2	SPF

DRY: SEASONED LUMBER.

GABLE STUDS SPACED AT 2-0-0 OC.

PLATES (table is in inches)

JT	TYPE	PLATES	W	LEN	Y	X
B	TMVW+p	MT20	4.0	6.0	Edge	
C	TMW+w	MT20	2.0	4.0		
D	TTW-p	MT20	4.0	4.0	1.50	2.00
E	TMW+w	MT20	2.0	4.0		
F	TMVW+p	MT20	4.0	6.0	Edge	
H	BMV1+p	MT20	3.0	4.0		
I	BMWW1-t	MT20	5.0	6.0		
J	BMW1+w	MT20	2.0	4.0		
K	BMWW1-t	MT20	5.0	6.0		
L	BMV1+p	MT20	3.0	4.0		

Edge - INDICATES REFERENCE CORNER OF PLATE TOUCHES EDGE OF CHORD.

NOTES-
1) Lateral braces to be a minimum of 2X4 SPF #2.

LICENSED PROFESSIONAL ENGINEER
11/14/23
C. M. HEYENS
100505065
PROVINCE OF ONTARIO

STRUCTURAL COMPONENT ONLY
DWG # TR23111057

DIMENSIONS, SUPPORTS AND LOADINGS SPECIFIED BY FABRICATOR TO BE VERIFIED BY BUILDING DESIGNER

BEARINGS

THIS TRUSS DESIGNED FOR CONTINUOUS BEARINGS.

THIS TRUSS REQUIRES RIGID SHEATHING ON EXPOSED FACE.

BEARING MATERIAL TO BE SPF NO.2 OR BETTER AT JOINT(S)

BRACING

TOP CHORD TO BE SHEATHED OR MAX. PURLIN SPACING = 6.25 FT.
MAX. UNBRACED BOTTOM CHORD LENGTH = 10.00 FT OR RIGID CEILING DIRECTLY APPLIED.

ALL PITCH BREAKS AND PERIMETER CORNER JOINTS MUST BE LATERALLY RESTRAINED.

LOADING

TOTAL LOAD CASES: (4)

CHORDS

MEMB. FR-TO	MAX. FORCE (LBS)	FACTORED VERT. LOAD (PLF) FROM	TO	LC1	MAX CSI (LC)	MAX. UNBRAC LENGTH
L- B	-326 / 0	0.0	0.0		0.03 (1)	7.81
A- B	0 / 58	-129.7	-129.7		0.18 (1)	10.00
B- C	-15 / 0	-129.7	-129.7		0.10 (1)	6.25
C- D	-45 / 0	-129.7	-129.7		0.10 (1)	6.25
D- E	-45 / 0	-129.7	-129.7		0.10 (1)	6.25
E- F	-15 / 0	-129.7	-129.7		0.10 (1)	6.25
F- G	0 / 58	-129.7	-129.7		0.18 (1)	10.00
H- F	-326 / 0	0.0	0.0		0.03 (1)	7.81
L- K	0 / 0	-18.5	-18.5		0.02 (4)	10.00
K- J	0 / 18	-18.5	-18.5		0.02 (4)	10.00
J- I	0 / 18	-18.5	-18.5		0.02 (4)	10.00
I- H	0 / 0	-18.5	-18.5		0.02 (4)	10.00

WEBS

MEMB. FR-TO	MAX. FORCE (LBS)	MAX CSI (LC)
J- D	-174 / 0	0.07 (1)
K- C	-334 / 0	0.07 (1)
I- E	-334 / 0	0.07 (1)
B- K	0 / 32	0.01 (1)
I- F	0 / 32	0.01 (1)

DESIGN CRITERIA

SPECIFIED LOADS:

TOP CH.	LL	=	38.3	PSF
	DL	=	6.0	PSF
BOT CH.	LL	=	0.0	PSF
	DL	=	7.4	PSF
TOTAL LOAD		=	51.6	PSF

SPACING = 24.0 IN. C/C

THIS TRUSS IS DESIGNED FOR RESIDENTIAL OR SMALL BUILDING REQUIREMENTS OF PART 9, NBCC 2015

THIS DESIGN COMPLIES WITH:
- PART 9 OF BCBC 2018 , NBC-2019AE
- PART 9 OF OBC 2012 (2019 AMENDMENT)
- CSA 086-14
- TPIC 2014

(55 % OF 54.4 P.S.F. G.S.L. PLUS 8.4 P.S.F. RAIN LOAD) EQUALS 38.3 P.S.F. SPECIFIED ROOF LIVE LOAD

CSI: TC=0.18/1.00 (F-G:1) , BC=0.02/1.00 (J-K:4) , WB=0.07/1.00 (C-K:1) , SSI=0.11/1.00 (F-G:1)

DOL LUMBER=1.00 NAIL=1.00 LS BEND=1.10 COMP=1.10 SHEAR=1.10 TENS= 1.10

COMPANION LIVE LOAD FACTOR = 1.00

TRUSS PLATE MANUFACTURER IS NOT RESPONSIBLE FOR QUALITY CONTROL IN THE TRUSS MANUFACTURING PLANT .

NAIL VALUES

PLATE	GRIP(DRY) (PSI) MAX	MIN	SHEAR (PLI) MAX	MIN	SECTION (PLI) MAX	MIN
MT20	650	371	1747	788	1987	1873

PLATE PLACEMENT TOL. = 0.250 inches

PLATE ROTATION TOL. = 5.0 Deg.

JSI GRIP= 0.27 (D) (INPUT = 0.90)
JSI METAL= 0.18 (C) (INPUT = 1.00)

JOB NAME	TRUSS NAME	QUANTITY	PLY	JOB DESC.	DRWG NO.
418649	T13	1	1	BAYVIEW WELLINGTON TRUSS DESC.	

Tamarack Roof Truss, Burlington

Version 8.630 S Aug 30 2023 MiTek Industries, Inc. Tue Nov 14 11:14:58 2023 Page 1
ID:UaoF4umx8QMX1bo7Q0Zg7Cya5EO-XFPhJSmSN5JFJXLmlk5fdjt7LTIM3hff4qkAW9yJIPx

Scale = 1:42.7

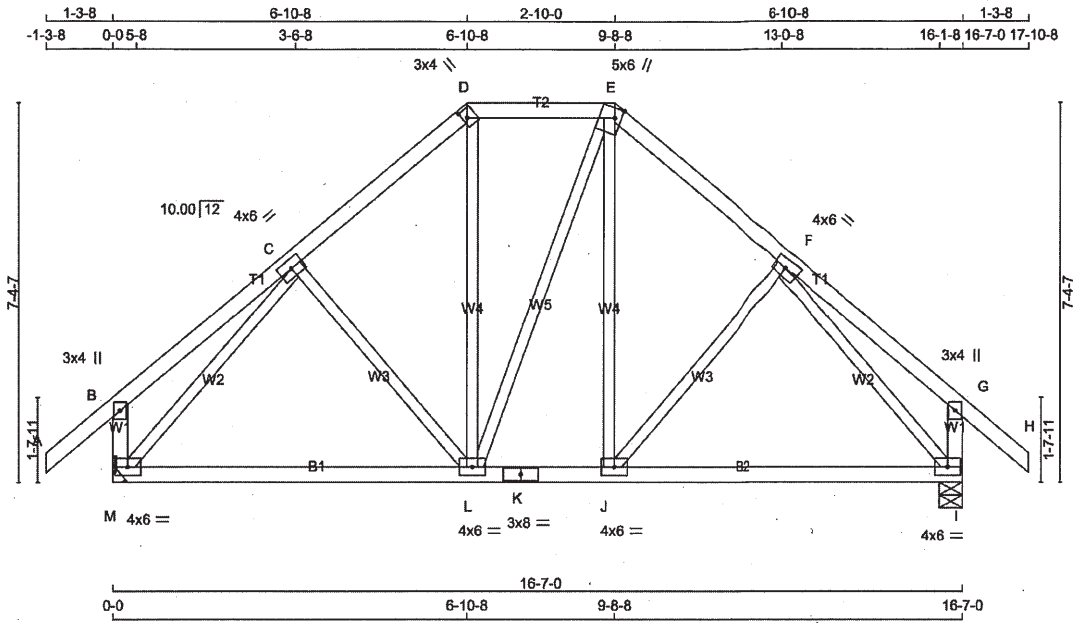

TOTAL WEIGHT = 83 lb

LUMBER
N. L. G. A. RULES

CHORDS	SIZE		LUMBER	DESCR.
A - D	2x4	DRY	No.2	SPF
D - E	2x4	DRY	No.2	SPF
E - H	2x4	DRY	No.2	SPF
M - B	2x4	DRY	No.2	SPF
I - G	2x4	DRY	No.2	SPF
M - K	2x4	DRY	No.2	SPF
K - I	2x4	DRY	No.2	SPF
ALL WEBS EXCEPT	2x3	DRY	No.2	SPF

DRY: SEASONED LUMBER.

PLATES (table is in inches)

JT	TYPE	PLATES	W	LEN	Y	X
B	TMV+p	MT20	3.0	4.0		
C	TMWW-t	MT20	4.0	6.0		
D	TTW+h	MT20	3.0	4.0	2.00	1.00
E	TTWW+m	MT20	5.0	6.0	2.25	1.50
F	TMWW-t	MT20	4.0	6.0		
G	TMV+p	MT20	3.0	4.0		
I	BMVW1-t	MT20	4.0	6.0		
J	BMWW-t	MT20	4.0	6.0		
K	BS-t	MT20	3.0	8.0		
L	BMWWW-t	MT20	4.0	6.0		
M	BMVW1-t	MT20	4.0	6.0		

NOTES-
1) Lateral braces to be a minimum of 2X4 SPF #2.

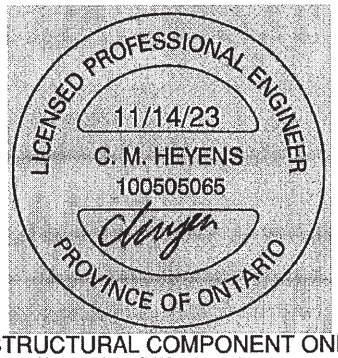

STRUCTURAL COMPONENT ONLY
DWG # TR23111088

DIMENSIONS, SUPPORTS AND LOADINGS SPECIFIED BY FABRICATOR TO BE VERIFIED BY BUILDING DESIGNER

BEARINGS

JT	FACTORED GROSS REACTION VERT	HORZ	MAXIMUM FACTORED GROSS REACTION DOWN	HORZ	UPLIFT	INPUT BRG IN-SX	REQRD BRG IN-SX
M	1409	0	1409	0	0	MECHANICAL	
I	1409	0	1409	0	0	5-8	1-8

A SUITABLE HANGER/MECHANICAL CONNECTION IS REQUIRED AT JOINT M. MINIMUM BEARING LENGTH AT JOINT M = 1-8.

UNFACTORED REACTIONS

JT	1ST LCASE COMBINED	MAX./MIN. COMPONENT REACTIONS SNOW	LIVE	PERM.LIVE	WIND	DEAD	SOIL
M	979	740 / 0	0 / 0	0 / 0	0 / 0	239 / 0	0 / 0
I	979	740 / 0	0 / 0	0 / 0	0 / 0	239 / 0	0 / 0

BEARING MATERIAL TO BE SPF NO.2 OR BETTER AT JOINT(S) I

BRACING
TOP CHORD TO BE SHEATHED OR MAX. PURLIN SPACING = 6.12 FT.
MAX. UNBRACED BOTTOM CHORD LENGTH = 10.00 FT OR RIGID CEILING DIRECTLY APPLIED.

ALL PITCH BREAKS AND PERIMETER CORNER JOINTS MUST BE LATERALLY RESTRAINED.

LOADING
TOTAL LOAD CASES: (4)

CHORDS

MEMB. FR-TO	MAX. FACTORED FORCE (LBS)	FACTORED VERT. LOAD (PLF) FROM	TO	LC1 MAX CSI (LC)	MAX. UNBRAC LENGTH
A- B	0 / 58	-129.7	-129.7	0.18 (1)	10.00
B- C	0 / 33	-129.7	-129.7	0.24 (1)	10.00
C- D	-957 / 0	-129.7	-129.7	0.20 (1)	6.12
D- E	-711 / 0	-129.7	-129.7	0.14 (1)	6.25
E- F	-956 / 0	-129.7	-129.7	0.20 (1)	6.13
F- G	0 / 33	-129.7	-129.7	0.24 (1)	10.00
G- H	0 / 58	-129.7	-129.7	0.18 (1)	10.00
M- B	-349 / 0	0.0	0.0	0.04 (1)	7.81
I- G	-349 / 0	0.0	0.0	0.04 (1)	7.81
M- L	0 / 826	-18.5	-18.5	0.24 (1)	10.00
L- K	0 / 711	-18.5	-18.5	0.22 (4)	10.00
K- J	0 / 711	-18.5	-18.5	0.22 (4)	10.00
J- I	0 / 826	-18.5	-18.5	0.24 (1)	10.00

WEBS

MEMB. FR-TO	MAX. FACTORED FORCE (LBS)	MAX CSI (LC)
C- L	-181 / 0	0.09 (1)
L- D	0 / 236	0.05 (1)
L- E	0 / 2	0.00 (1)
J- E	0 / 234	0.05 (1)
J- F	-181 / 0	0.09 (1)
M- C	-1301 / 0	0.61 (1)
F- I	-1300 / 0	0.61 (1)

[M][F]

DESIGN CRITERIA

SPECIFIED LOADS:

TOP CH.	LL =	38.3	PSF
	DL =	6.0	PSF
BOT CH.	LL =	0.0	PSF
	DL =	7.4	PSF
TOTAL LOAD	=	51.6	PSF

SPACING = 24.0 IN. C/C

LOADING IN FLAT SECTION BASED ON A SLOPE OF 6.00/12

THIS TRUSS IS DESIGNED FOR RESIDENTIAL OR SMALL BUILDING REQUIREMENTS OF PART 9, NBCC 2015

THIS DESIGN COMPLIES WITH:
- PART 9 OF BCBC 2018 , NBC-2019AE
- PART 9 OF OBC 2012 (2019 AMENDMENT)
- CSA 086-14
- TPIC 2014

(55 % OF 54.4 P.S.F. G.S.L. PLUS 8.4 P.S.F. RAIN LOAD) EQUALS 38.3 P.S.F. SPECIFIED ROOF LIVE LOAD

ALLOWABLE DEFL.(LL)= L/360 (0.55")
CALCULATED VERT. DEFL.(LL) = L/ 999 (0.02")
ALLOWABLE DEFL.(TL)= L/360 (0.55")
CALCULATED VERT. DEFL.(TL) = L/ 999 (0.09")

CSI: TC=0.24/1.00 (F-G:1) , BC=0.24/1.00 (I-J:1) , WB=0.61/1.00 (C-M:1) , SSI=0.16/1.00 (E-F:1)

DOL LUMBER=1.00 NAIL=1.00 LS BEND=1.10 COMP=1.10 SHEAR=1.10 TENS= 1.10

COMPANION LIVE LOAD FACTOR = 1.00

AUTOSOLVE RIGHT HEEL ONLY

TRUSS PLATE MANUFACTURER IS NOT RESPONSIBLE FOR QUALITY CONTROL IN THE TRUSS MANUFACTURING PLANT .

NAIL VALUES

PLATE	GRIP(DRY) (PSI) MAX	MIN	SHEAR (PLI) MAX	MIN	SECTION (PLI) MAX	MIN
MT20	650	371	1747	788	1987	1873

PLATE PLACEMENT TOL. = 0.250 inches

PLATE ROTATION TOL. = 5.0 Deg.

JSI GRIP= 0.82 (C) (INPUT = 0.90)
JSI METAL= 0.36 (K) (INPUT = 1.00)

JOB NAME	TRUSS NAME	QUANTITY	PLY	JOB DESC.	DRWG NO.
418649	T14	1	1	BAYVIEW WELLINGTON TRUSS DESC.	

Tamarack Roof Truss, Burlington

Version 8.630 S Aug 30 2023 MiTek Industries, Inc. Tue Nov 14 11:14:59 2023 Page 1

ID:UaoF4umx8QMX1bo7Q0Zg7Cya5EO-?Rz4Xon48OR6wgwzISduAxQGFteDo4apJUTj2bvJIPw

Scale = 1:49.7

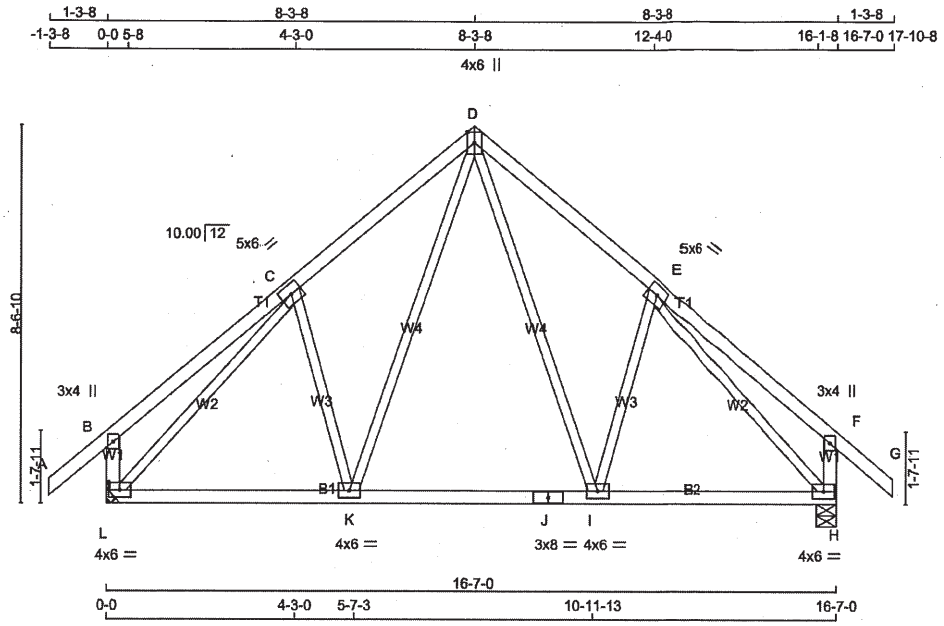

TOTAL WEIGHT = 82 lb

LUMBER

N. L. G. A. RULES

CHORDS	SIZE		LUMBER	DESCR.
A - D	2x4	DRY	No.2	SPF
D - G	2x4	DRY	No.2	SPF
L - B	2x4	DRY	No.2	SPF
H - F	2x4	DRY	No.2	SPF
L - J	2x4	DRY	No.2	SPF
J - H	2x4	DRY	No.2	SPF
ALL WEBS EXCEPT	2x3	DRY	No.2	SPF

DRY: SEASONED LUMBER.

PLATES (table is in inches)

JT	TYPE	PLATES	W	LEN	Y	X
B	TMV+p	MT20	3.0	4.0		
C	TMWW-t	MT20	5.0	6.0		
D	TTWW+p	MT20	4.0	6.0	Edge	
E	TMWW-t	MT20	5.0	6.0		
F	TMV+p	MT20	3.0	4.0		
H	BMVW1-t	MT20	4.0	6.0		
I	BMWW-t	MT20	4.0	6.0		
J	BS-t	MT20	3.0	8.0		
K	BMWW-t	MT20	4.0	6.0		
L	BMVW1-t	MT20	4.0	6.0		

Edge - INDICATES REFERENCE CORNER OF PLATE TOUCHES EDGE OF CHORD.

NOTES-

1) Lateral braces to be a minimum of 2X4 SPF #2.

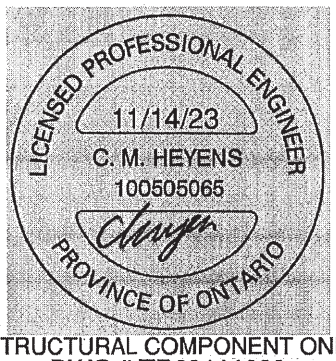

STRUCTURAL COMPONENT ONLY
DWG # TR23111089

DIMENSIONS, SUPPORTS AND LOADINGS SPECIFIED BY FABRICATOR TO BE VERIFIED BY BUILDING DESIGNER

BEARINGS

JT	FACTORED GROSS REACTION VERT	HORZ	MAXIMUM FACTORED GROSS REACTION DOWN	HORZ	UPLIFT	INPUT BRG IN-SX	REQRD BRG IN-SX
L	1409	0	1409	0	0	MECHANICAL	
H	1409	0	1409	0	0	5-8	1-8

A SUITABLE HANGER/MECHANICAL CONNECTION IS REQUIRED AT JOINT L. MINIMUM BEARING LENGTH AT JOINT L = 1-8.

UNFACTORED REACTIONS

JT	1ST LCASE COMBINED	MAX./MIN. COMPONENT REACTIONS SNOW	LIVE	PERM.LIVE	WIND	DEAD	SOIL
L	979	740 / 0	0 / 0	0 / 0	0 / 0	239 / 0	0 / 0
H	979	740 / 0	0 / 0	0 / 0	0 / 0	239 / 0	0 / 0

BEARING MATERIAL TO BE SPF NO.2 OR BETTER AT JOINT(S) H

BRACING

TOP CHORD TO BE SHEATHED OR MAX. PURLIN SPACING = 5.83 FT.
MAX. UNBRACED BOTTOM CHORD LENGTH = 10.00 FT OR RIGID CEILING DIRECTLY APPLIED.

ALL PITCH BREAKS AND PERIMETER CORNER JOINTS MUST BE LATERALLY RESTRAINED.

LOADING

TOTAL LOAD CASES: (4)

CHORDS

MEMB. FR-TO	MAX. FACTORED FORCE (LBS)	FACTORED VERT. LOAD (PLF) FROM	TO	LC1 MAX CSI (LC)	MAX. UNBRAC LENGTH
A- B	0 / 58	-129.7	-129.7	0.18 (1)	10.00
B- C	0 / 41	-129.7	-129.7	0.36 (1)	10.00
C- D	-1028 / 0	-129.7	-129.7	0.29 (1)	5.83
D- E	-1028 / 0	-129.7	-129.7	0.29 (1)	5.83
E- F	0 / 41	-129.7	-129.7	0.36 (1)	10.00
F- G	0 / 58	-129.7	-129.7	0.18 (1)	10.00
L- B	-382 / 0	0.0	0.0	0.04 (1)	7.81
H- F	-382 / 0	0.0	0.0	0.04 (1)	7.81
L- K	0 / 854	-18.5	-18.5	0.20 (1)	10.00
K- J	0 / 618	-18.5	-18.5	0.17 (4)	10.00
J- I	0 / 618	-18.5	-18.5	0.17 (4)	10.00
I- H	0 / 854	-18.5	-18.5	0.20 (1)	10.00

WEBS

MEMB. FR-TO	MAX. FACTORED FORCE (LBS)	MAX CSI (LC)
D- I	0 / 446	0.10 (1)
I- E	-326 / 0	0.14 (1)
K- D	0 / 446	0.10 (1)
C- K	-326 / 0	0.14 (1)
L- C	-1303 / 0	0.89 (1)
E- H	-1303 / 0	0.89 (1)

[M][F]

DESIGN CRITERIA

SPECIFIED LOADS:

TOP CH.	LL	=	38.3	PSF
	DL	=	6.0	PSF
BOT CH.	LL	=	0.0	PSF
	DL	=	7.4	PSF
TOTAL LOAD		=	51.6	PSF

SPACING = 24.0 IN. C/C

THIS TRUSS IS DESIGNED FOR RESIDENTIAL OR SMALL BUILDING REQUIREMENTS OF PART 9, NBCC 2015

THIS DESIGN COMPLIES WITH:
- PART 9 OF BCBC 2018 , NBC-2019AE
- PART 9 OF OBC 2012 (2019 AMENDMENT)
- CSA 086-14
- TPIC 2014

(55 % OF 54.4 P.S.F. G.S.L. PLUS 8.4 P.S.F. RAIN LOAD) EQUALS 38.3 P.S.F. SPECIFIED ROOF LIVE LOAD

ALLOWABLE DEFL.(LL)= L/360 (0.55")
CALCULATED VERT. DEFL.(LL) = L/ 999 (0.03")
ALLOWABLE DEFL.(TL)= L/360 (0.55")
CALCULATED VERT. DEFL.(TL) = L/ 999 (0.05")

CSI: TC=0.36/1.00 (B-C:1) , BC=0.20/1.00 (K-L:1) , WB=0.89/1.00 (C-L:1) , SSI=0.20/1.00 (C-D:1)

DOL LUMBER=1.00 NAIL=1.00 LS BEND=1.10 COMP=1.10 SHEAR=1.10 TENS= 1.10

COMPANION LIVE LOAD FACTOR = 1.00

TRUSS PLATE MANUFACTURER IS NOT RESPONSIBLE FOR QUALITY CONTROL IN THE TRUSS MANUFACTURING PLANT .

NAIL VALUES

PLATE	GRIP(DRY) (PSI) MAX	MIN	SHEAR (PLI) MAX	MIN	SECTION (PLI) MAX	MIN
MT20	650	371	1747	788	1987	1873

PLATE PLACEMENT TOL. = 0.250 inches

PLATE ROTATION TOL. = 5.0 Deg.

JSI GRIP= 0.78 (C) (INPUT = 0.90)
JSI METAL= 0.32 (C) (INPUT = 1.00)

JOB NAME	TRUSS NAME	QUANTITY	PLY	JOB DESC.	DRWG NO.
418649	T15	2	1	BAYVIEW WELLINGTON TRUSS DESC.	

Tamarack Roof Truss, Burlington

Version 8.630 S Aug 30 2023 MiTek Industries, Inc. Tue Nov 14 11:15:00 2023 Page 1
ID:UaoF4umx8QMX1bo7Q0Zq7Cya5EO-TeXSk8oivZzYqU9s987j8zT4GtBXYByX8DHb2yJIPv

Scale = 1:37.2

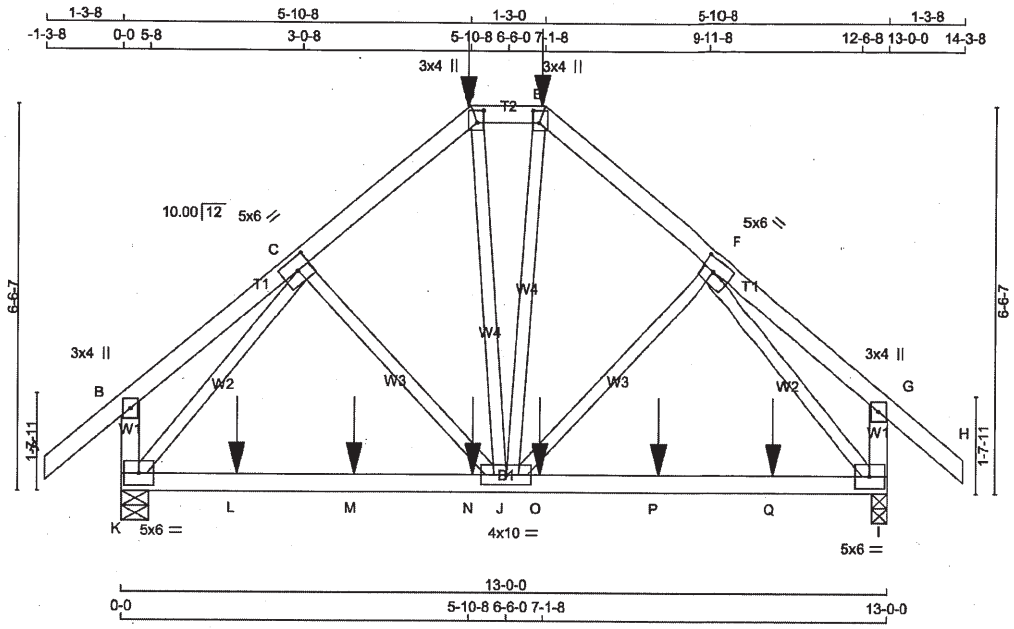

TOTAL WEIGHT = 2 X 65 = 131 lb [M]

LUMBER

N. L. G. A. RULES

CHORDS	SIZE		LUMBER	DESCR.
A - D	2x4	DRY	No.2	SPF
D - E	2x4	DRY	No.2	SPF
E - H	2x4	DRY	No.2	SPF
K - B	2x4	DRY	No.2	SPF
I - G	2x4	DRY	No.2	SPF
K - I	2x4	DRY	No.2	SPF
ALL WEBS EXCEPT	2x3	DRY	No.2	SPF

DRY: SEASONED LUMBER.

PLATES (table is in inches)

JT	TYPE	PLATES	W	LEN	Y	X
B	TMV+p	MT20	3.0	4.0		
C	TMWW-t	MT20	5.0	6.0	2.50	2.75
D	TTW+p	MT20	3.0	4.0	2.50	1.25
E	TTW+p	MT20	3.0	4.0	2.50	1.25
F	TMWW-t	MT20	5.0	6.0	2.50	2.75
G	TMV+p	MT20	3.0	4.0		
I	BMVW1-t	MT20	5.0	6.0		
J	BMWWWW*-I	MT20	4.0	10.0		
K	BMVW1-t	MT20	5.0	6.0		

NOTES-

1) Lateral braces to be a minimum of 2X4 SPF #2.

LICENSED PROFESSIONAL ENGINEER
11/14/23
C. M. HEYENS
100505065
PROVINCE OF ONTARIO

STRUCTURAL COMPONENT ONLY
DWG # TR23111090

DIMENSIONS, SUPPORTS AND LOADINGS SPECIFIED BY FABRICATOR TO BE VERIFIED BY BUILDING DESIGNER

BEARINGS

JT	FACTORED GROSS REACTION VERT	HORZ	MAXIMUM FACTORED GROSS REACTION DOWN	HORZ	UPLIFT	INPUT BRG IN-SX	REQRD BRG IN-SX
K	2101	0	2101	0	0	5-8	2-4
I	2100	0	2100	0	0	3-0	2-4

UNFACTORED REACTIONS

JT	1ST LCASE COMBINED	MAX./MIN. COMPONENT REACTIONS SNOW	LIVE	PERM.LIVE	WIND	DEAD	SOIL
K	1462	1096 / 0	0 / 0	0 / 0	0 / 0	366 / 0	0 / 0
I	1461	1095 / 0	0 / 0	0 / 0	0 / 0	366 / 0	0 / 0

BEARING MATERIAL TO BE SPF NO.2 OR BETTER AT JOINT(S) K, I

BRACING

TOP CHORD TO BE SHEATHED OR MAX. PURLIN SPACING = 4.69 FT.
MAX. UNBRACED BOTTOM CHORD LENGTH = 10.00 FT OR RIGID CEILING DIRECTLY APPLIED.

ALL PITCH BREAKS AND PERIMETER CORNER JOINTS MUST BE LATERALLY RESTRAINED.

LOADING

TOTAL LOAD CASES: (4)

CHORDS

MEMB. FR-TO	MAX. FACTORED FORCE (LBS)	FACTORED VERT. LOAD (PLF) FROM	TO	LC1	MAX CSI (LC)	MAX. UNBRAC LENGTH
A- B	0 / 58	-129.7	-129.7	0.20	(1)	10.00
B- C	0 / 25	-129.7	-129.7	0.18	(1)	10.00
C- D	-1835 / 0	-129.7	-129.7	0.23	(1)	4.69
D- E	-1420 / 0	-129.7	-129.7	0.06	(1)	5.41
E- F	-1834 / 0	-129.7	-129.7	0.23	(1)	4.69
F- G	0 / 25	-129.7	-129.7	0.18	(1)	10.00
G- H	0 / 58	-129.7	-129.7	0.20	(1)	10.00
K- B	-329 / 0	0.0	0.0	0.04	(1)	7.81
I- G	-329 / 0	0.0	0.0	0.04	(1)	7.81
K- L	0 / 1321	-18.5	-18.5	0.67	(1)	10.00
L- M	0 / 1321	-18.5	-18.5	0.67	(1)	10.00
M- N	0 / 1321	-18.5	-18.5	0.67	(1)	10.00
N- J	0 / 1321	-18.5	-18.5	0.67	(1)	10.00
J- O	0 / 1320	-18.5	-18.5	0.67	(1)	10.00
O- P	0 / 1320	-18.5	-18.5	0.67	(1)	10.00
P- Q	0 / 1320	-18.5	-18.5	0.67	(1)	10.00
Q- I	0 / 1320	-18.5	-18.5	0.67	(1)	10.00

WEBS

MEMB. FR-TO	MAX. FACTORED FORCE (LBS)	MAX CSI (LC)
C- J	0 / 101	0.02 (1)
J- F	0 / 100	0.02 (1)
K- C	-2148 / 0	0.80 (1)
F- I	-2146 / 0	0.80 (1)
D- J	0 / 314	0.08 (1)
J- E	0 / 325	0.08 (1)

SPECIFIED CONCENTRATED LOADS (LBS)

JT	LOC.	LC1	MAX-	MAX+	FACE	DIR.	TYPE	HEEL	CONN.
D	5-11-2	-421	-421	---	BACK	VERT	TOTAL	---	C1
E	7-0-14	-413	-413	---	BACK	VERT	TOTAL	---	C1
L	1-11-4	-29	-29	---	BACK	VERT	TOTAL	---	C1
M	3-11-4	-29	-29	---	BACK	VERT	TOTAL	---	C1
N	5-11-4	-193	-193	---	BACK	VERT	TOTAL	---	C1
O	7-0-12	-193	-193	---	BACK	VERT	TOTAL	---	C1
P	9-0-12	-29	-29	---	BACK	VERT	TOTAL	---	C1
Q	11-0-12	-29	-29	---	BACK	VERT	TOTAL	---	C1

CONNECTION REQUIREMENTS

1) **C1:** A SUITABLE HANGER/MECHANICAL CONNECTION IS REQUIRED.

DESIGN CRITERIA

SPECIFIED LOADS:

TOP CH.	LL	=	38.3	PSF
	DL	=	6.0	PSF
BOT CH.	LL	=	0.0	PSF
	DL	=	7.4	PSF
TOTAL LOAD		=	51.6	PSF

SPACING = 24.0 IN. C/C

LOADING IN FLAT SECTION BASED ON A SLOPE OF 6.00/12

THIS TRUSS IS DESIGNED FOR RESIDENTIAL OR SMALL BUILDING REQUIREMENTS OF PART 9, NBCC 2015

THIS DESIGN COMPLIES WITH:
- PART 9 OF BCBC 2018 , NBC-2019AE
- PART 9 OF OBC 2012 (2019 AMENDMENT)
- CSA 086-14
- TPIC 2014

(55 % OF 54.4 P.S.F. G.S.L. PLUS 8.4 P.S.F. RAIN LOAD) EQUALS 38.3 P.S.F. SPECIFIED ROOF LIVE LOAD

ALLOWABLE DEFL.(LL)= L/360 (0.43")
CALCULATED VERT. DEFL.(LL) = L/ 999 (0.03")
ALLOWABLE DEFL.(TL)= L/360 (0.43")
CALCULATED VERT. DEFL.(TL) = L/ 999 (0.11")

CSI: TC=0.23/1.00 (C-D:1) , BC=0.67/1.00 (J-K:1) , WB=0.80/1.00 (C-K:1) , SSI=0.34/1.00 (I-J:1)

DOL LUMBER=1.00 NAIL=1.00 LS BEND=1.00 COMP=1.00 SHEAR=1.00 TENS= 1.00

COMPANION LIVE LOAD FACTOR = 1.00

TRUSS PLATE MANUFACTURER IS NOT RESPONSIBLE FOR QUALITY CONTROL IN THE TRUSS MANUFACTURING PLANT .

NAIL VALUES

PLATE	GRIP(DRY) (PSI) MAX	MIN	SHEAR (PLI) MAX	MIN	SECTION (PLI) MAX	MIN
MT20	650	371	1747	788	1987	1873

PLATE PLACEMENT TOL. = 0.250 inches

PLATE ROTATION TOL. = 5.0 Deg.

JSI GRIP= 0.87 (C) (INPUT = 0.90)
JSI METAL= 0.48 (C) (INPUT = 1.00)

JOB NAME	TRUSS NAME	QUANTITY	PLY	JOB DESC.	DRWG NO.
418649	T16	2	1	BAYVIEW WELLINGTON TRUSS DESC.	

Tamarack Roof Truss, Burlington

Version 8.630 S Aug 30 2023 MiTek Industries, Inc. Tue Nov 14 11:15:01 2023 Page 1
ID:UaoF4umx8QMX1bo7Q0Zq7Cya5EO-xq5qxUpKq0hqA 3LQsfMFMVe4qMEGA66moyq7UyJIPu

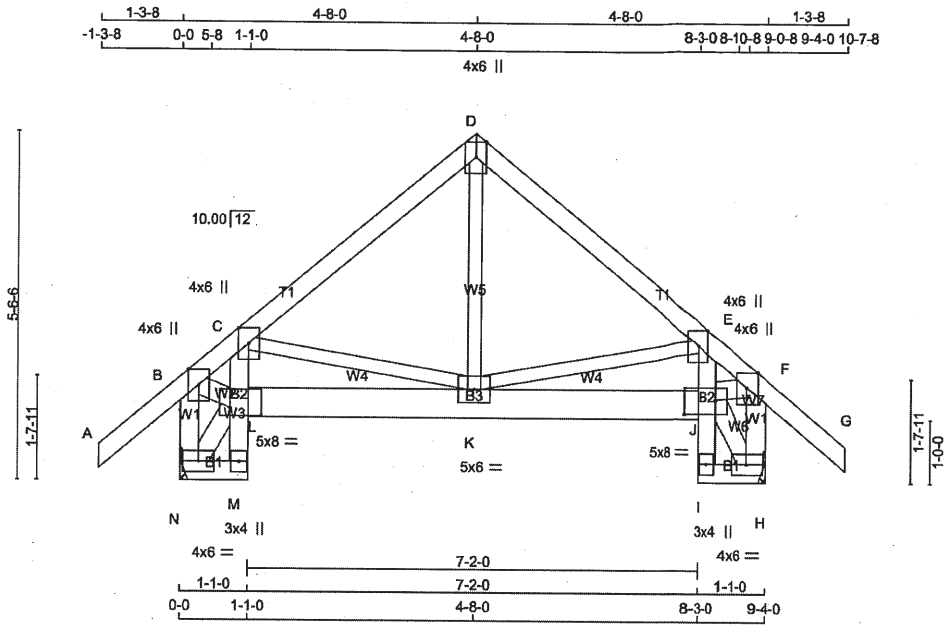

TOTAL WEIGHT = 2 X 53 = 106 lb

[M][F]

LUMBER

N. L. G. A. RULES

CHORDS	SIZE		LUMBER	DESCR.
A - D	2x4	DRY	No.2	SPF
D - G	2x4	DRY	No.2	SPF
N - B	2x4	DRY	No.2	SPF
H - F	2x4	DRY	No.2	SPF
N - M	2x4	DRY	No.2	SPF
M - C	2x4	DRY	No.2	SPF
L - J	2x6	DRY	No.2	SPF
I - E	2x4	DRY	No.2	SPF
I - H	2x4	DRY	No.2	SPF
ALL WEBS EXCEPT	2x4	DRY	No.2	SPF
K - D	2x3	DRY	No.2	SPF
K - E	2x3	DRY	No.2	SPF
C - K	2x3	DRY	No.2	SPF

DRY: SEASONED LUMBER.

PLATES (table is in inches)

JT	TYPE	PLATES	W	LEN	Y	X
B	TMVW+p	MT20	4.0	6.0	Edge	
C	TMVW+p	MT20	4.0	6.0	Edge	2.00
D	TTW+p	MT20	4.0	6.0	Edge	
E	TMVW+p	MT20	4.0	6.0	Edge	2.00
F	TMVW+p	MT20	4.0	6.0	Edge	
H	BMVW1-t	MT20	4.0	6.0		
I	BMV+p	MT20	3.0	4.0		
J	BVMWW-l	MT20	5.0	8.0	2.75	6.00
K	BMWWW-t	MT20	5.0	6.0		
L	BVMWW-l	MT20	5.0	8.0	1.50	6.00
M	BMV+p	MT20	3.0	4.0		
N	BMVW1-t	MT20	4.0	6.0		

Edge - INDICATES REFERENCE CORNER OF PLATE TOUCHES EDGE OF CHORD.

NOTES-

1) Lateral braces to be a minimum of 2X4 SPF #2.

LICENSED PROFESSIONAL ENGINEER
11/14/23
C. M. HEYENS
100505065
PROVINCE OF ONTARIO

STRUCTURAL COMPONENT ONLY
DWG # TR23111091

DIMENSIONS, SUPPORTS AND LOADINGS SPECIFIED BY FABRICATOR TO BE VERIFIED BY BUILDING DESIGNER

BEARINGS

JT	FACTORED GROSS REACTION VERT	HORZ	MAXIMUM FACTORED GROSS REACTION DOWN	HORZ	UPLIFT	INPUT BRG IN-SX	REQRD BRG IN-SX
N	871	0	871	0	0	MECHANICAL	
H	871	0	871	0	0	MECHANICAL	

A SUITABLE HANGER/MECHANICAL CONNECTION IS REQUIRED AT JOINT N, H. MINIMUM BEARING LENGTH AT JOINT N = 1-8, JOINT H = 1-8.

UNFACTORED REACTIONS

JT	1ST LCASE COMBINED	MAX./MIN. COMPONENT REACTIONS SNOW	LIVE	PERM.LIVE	WIND	DEAD	SOIL
N	604	463 / 0	0 / 0	0 / 0	0 / 0	142 / 0	0 / 0
H	604	463 / 0	0 / 0	0 / 0	0 / 0	142 / 0	0 / 0

BRACING

TOP CHORD TO BE SHEATHED OR MAX. PURLIN SPACING = 6.25 FT.
MAX. UNBRACED BOTTOM CHORD LENGTH = 7.81 FT OR RIGID CEILING DIRECTLY APPLIED.

ALL PITCH BREAKS AND PERIMETER CORNER JOINTS MUST BE LATERALLY RESTRAINED.

LOADING

TOTAL LOAD CASES: (4)

CHORDS

MEMB. FR-TO	MAX. FACTORED FORCE (LBS)	FACTORED VERT. LOAD LC1 (PLF) FROM	TO	MAX CSI (LC)	MAX. UNBRAC LENGTH
A- B	0 / 58	-129.7	-129.7	0.18 (1)	10.00
B- C	-748 / 0	-129.7	-129.7	0.17 (1)	6.25
C- D	-504 / 0	-129.7	-129.7	0.21 (1)	6.25
D- E	-502 / 0	-129.7	-129.7	0.21 (1)	6.25
E- F	-919 / 0	-129.7	-129.7	0.17 (1)	6.25
F- G	0 / 58	-129.7	-129.7	0.18 (1)	10.00
N- B	-833 / 0	0.0	0.0	0.09 (1)	7.81
H- F	-822 / 0	0.0	0.0	0.09 (1)	7.81
N- M	0 / 26	-18.5	-18.5	0.01 (1)	10.00
M- L	0 / 10	0.0	0.0	0.04 (1)	10.00
L- C	-122 / 1	0.0	0.0	0.03 (1)	7.81
L- K	0 / 618	-18.5	-18.5	0.09 (1)	10.00
K- J	0 / 765	-18.5	-18.5	0.11 (1)	10.00
I- J	0 / 10	0.0	0.0	0.05 (1)	10.00
J- E	0 / 40	0.0	0.0	0.06 (1)	10.00
I- H	0 / 29	-18.5	-18.5	0.01 (1)	10.00

WEBS

MEMB. FR-TO	MAX. FACTORED FORCE (LBS)	MAX CSI (LC)
K- D	0 / 208	0.05 (1)
K- E	-411 / 0	0.11 (1)
C- K	-260 / 0	0.07 (1)
B- L	0 / 604	0.10 (1)
N- L	-39 / 0	0.00 (1)
J- F	0 / 716	0.12 (1)
J- H	-50 / 0	0.01 (1)

DESIGN CRITERIA

SPECIFIED LOADS:

TOP	CH.	LL	=	38.3	PSF
		DL	=	6.0	PSF
BOT	CH.	LL	=	0.0	PSF
		DL	=	7.4	PSF
TOTAL	LOAD		=	51.6	PSF

SPACING = 24.0 IN. C/C

THIS TRUSS IS DESIGNED FOR RESIDENTIAL OR SMALL BUILDING REQUIREMENTS OF PART 9, NBCC 2015

THIS DESIGN COMPLIES WITH:
- PART 9 OF BCBC 2018 , NBC-2019AE
- PART 9 OF OBC 2012 (2019 AMENDMENT)
- CSA 086-14
- TPIC 2014

DESIGN ASSUMPTIONS
-OVERHANG NOT TO BE ALTERED OR CUT OFF.

(55 % OF 54.4 P.S.F. G.S.L. PLUS 8.4 P.S.F. RAIN LOAD) EQUALS 38.3 P.S.F. SPECIFIED ROOF LIVE LOAD

ALLOWABLE DEFL.(LL)= L/360 (0.31")
CALCULATED VERT. DEFL.(LL) = L/ 999 (0.01")
ALLOWABLE DEFL.(TL)= L/360 (0.31")
CALCULATED VERT. DEFL.(TL) = L/ 999 (0.01")

CSI: TC=0.21/1.00 (D-E:1) , BC=0.11/1.00 (J-K:1) , WB=0.12/1.00 (F-J:1) , SSI=0.17/1.00 (C-D:1)

DOL LUMBER=1.00 NAIL=1.00 LS BEND=1.10 COMP=1.10 SHEAR=1.10 TENS= 1.10

COMPANION LIVE LOAD FACTOR = 1.00

AUTOSOLVE HEELS OFF

TRUSS PLATE MANUFACTURER IS NOT RESPONSIBLE FOR QUALITY CONTROL IN THE TRUSS MANUFACTURING PLANT .

NAIL VALUES

PLATE	GRIP(DRY) (PSI) MAX	MIN	SHEAR (PLI) MAX	MIN	SECTION (PLI) MAX	MIN
MT20	650	371	1747	788	1987	1873

PLATE PLACEMENT TOL. = 0.250 Inches

PLATE ROTATION TOL. = 5.0 Deg.

JSI GRIP= 0.60 (J) (INPUT = 0.90)
JSI METAL= 0.45 (F) (INPUT = 1.00)

JOB NAME	TRUSS NAME	QUANTITY	PLY	JOB DESC.	DRWG NO.
418649	T17	1	1	BAYVIEW WELLINGTON TRUSS DESC.	

Tamarack Roof Truss, Burlington

Version 8.630 S Aug 30 2023 MiTek Industries, Inc. Tue Nov 14 11:15:02 2023 Page 1
ID:UaoF4umx8QMX1bo7Q0Zq7Cya5EO-P0fC9qpyRJphn8eX aAboZ2nj4hp?bUF?SiOfwyJIP

Scale = 1:29.5

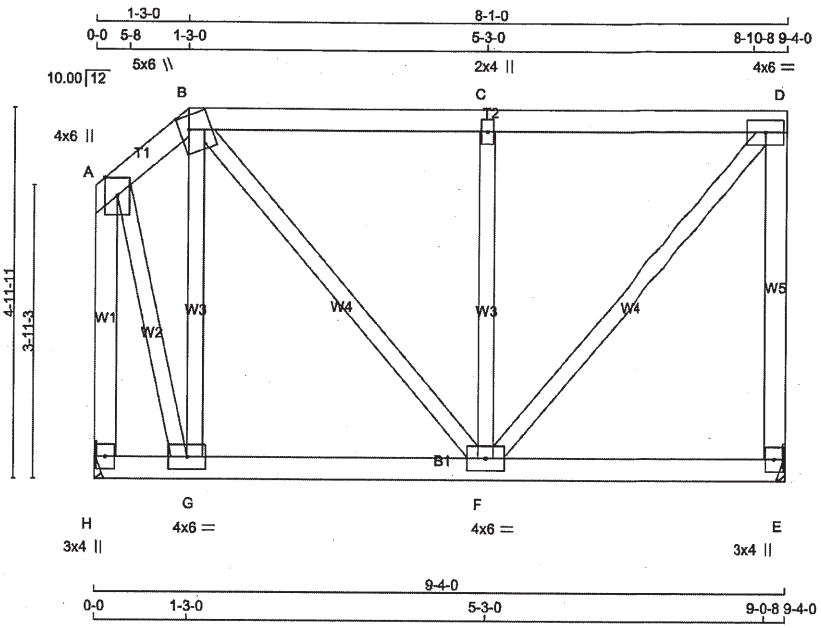

TOTAL WEIGHT = 51 lb
[M]

LUMBER
N. L. G. A. RULES

CHORDS	SIZE		LUMBER	DESCR.
A - B	2x4	DRY	No.2	SPF
B - D	2x4	DRY	No.2	SPF
E - D	2x4	DRY	No.2	SPF
H - A	2x4	DRY	No.2	SPF
H - E	2x4	DRY	No.2	SPF
ALL WEBS EXCEPT	2x3	DRY	No.2	SPF

DRY: SEASONED LUMBER.

PLATES (table is in inches)

JT	TYPE	PLATES	W	LEN	Y	X
A	TMVW+p	MT20	4.0	6.0	Edge	
B	TTWW+m	MT20	5.0	6.0	2.25	1.50
C	TMW+w	MT20	2.0	4.0		
D	TMVW-t	MT20	4.0	6.0		
E	BMV1+p	MT20	3.0	4.0		
F	BMWWW-t	MT20	4.0	6.0		
G	BMWW-t	MT20	4.0	6.0		
H	BMV1+p	MT20	3.0	4.0		

Edge - INDICATES REFERENCE CORNER OF PLATE TOUCHES EDGE OF CHORD.

NOTES-
1) Lateral braces to be a minimum of 2X4 SPF #2.

LICENSED PROFESSIONAL ENGINEER
11/14/23
C. M. HEYENS
100505065
PROVINCE OF ONTARIO

STRUCTURAL COMPONENT ONLY
DWG # TR23111092

DIMENSIONS, SUPPORTS AND LOADINGS SPECIFIED BY FABRICATOR TO BE VERIFIED BY BUILDING DESIGNER

BEARINGS

JT	FACTORED GROSS REACTION VERT	HORZ	MAXIMUM FACTORED GROSS REACTION DOWN	HORZ	UPLIFT	INPUT BRG IN-SX	REQRD BRG IN-SX
E	692	0	692	0	0	MECHANICAL	
H	692	0	692	0	0	MECHANICAL	

A SUITABLE HANGER/MECHANICAL CONNECTION IS REQUIRED AT JOINT E, H. MINIMUM BEARING LENGTH AT JOINT E = 1-8, JOINT H = 1-8.

UNFACTORED REACTIONS

JT	1ST LCASE COMBINED	MAX./MIN. COMPONENT REACTIONS SNOW	LIVE	PERM.LIVE	WIND	DEAD	SOIL
E	482	357 / 0	0 / 0	0 / 0	0 / 0	125 / 0	0 / 0
H	482	357 / 0	0 / 0	0 / 0	0 / 0	125 / 0	0 / 0

BRACING
TOP CHORD TO BE SHEATHED OR MAX. PURLIN SPACING = 6.25 FT.
MAX. UNBRACED BOTTOM CHORD LENGTH =.10.00 FT OR RIGID CEILING DIRECTLY APPLIED.

ALL PITCH BREAKS AND PERIMETER CORNER JOINTS MUST BE LATERALLY RESTRAINED.

LOADING
TOTAL LOAD CASES: (4)

CHORDS

MEMB. FR-TO	MAX. FACTORED FORCE (LBS)	FACTORED VERT. LOAD (PLF) FROM	TO	LC1 MAX CSI (LC)	MAX. UNBRAC LENGTH
A- B	-228 / 0	-129.7	-129.7	0.04 (1)	6.25
B- C	-397 / 0	-129.7	-129.7	0.35 (1)	6.25
C- D	-397 / 0	-129.7	-129.7	0.35 (1)	6.25
E- D	-659 / 0	0.0	0.0	0.27 (1)	7.81
H- A	-689 / 0	0.0	0.0	0.18 (1)	7.81
H- G	0 / 0	-18.5	-18.5	0.03 (4)	10.00
G- F	0 / 164	-18.5	-18.5	0.08 (4)	10.00
F- E	0 / 0	-18.5	-18.5	0.07 (4)	10.00

WEBS

MEMB. FR-TO	MAX. FACTORED FORCE (LBS)	MAX CSI (LC)
G- B	-404 / 0	0.15 (1)
A- G	0 / 492	0.11 (1)
B- F	0 / 357	0.08 (1)
F- C	-646 / 0	0.24 (1)
F- D	0 / 604	0.14 (1)

DESIGN CRITERIA

SPECIFIED LOADS:

TOP CH.	LL	=	38.3	PSF
	DL	=	6.0	PSF
BOT CH.	LL	=	0.0	PSF
	DL	=	7.4	PSF
TOTAL LOAD		=	51.6	PSF

SPACING = 24.0 IN. C/C

LOADING IN FLAT SECTION BASED ON A SLOPE OF 6.00/12

THIS TRUSS IS DESIGNED FOR RESIDENTIAL OR SMALL BUILDING REQUIREMENTS OF PART 9, NBCC 2015

THIS DESIGN COMPLIES WITH:
- PART 9 OF BCBC 2018 , NBC-2019AE
- PART 9 OF OBC 2012 (2019 AMENDMENT)
- CSA 086-14
- TPIC 2014

(55 % OF 54.4 P.S.F. G.S.L. PLUS 8.4 P.S.F. RAIN LOAD) EQUALS 38.3 P.S.F. SPECIFIED ROOF LIVE LOAD

ALLOWABLE DEFL.(LL)= L/360 (0.31")
CALCULATED VERT. DEFL.(LL) = L/ 999 (0.01")
ALLOWABLE DEFL.(TL)= L/360 (0.31")
CALCULATED VERT. DEFL.(TL) = L/ 999 (0.02")

CSI: TC=0.35/1.00 (C-D:1) , BC=0.08/1.00 (F-G:4) , WB=0.24/1.00 (C-F:1) , SSI=0.25/1.00 (C-D:1)

DOL LUMBER=1.00 NAIL=1.00 LS BEND=1.10 COMP=1.10 SHEAR=1.10 TENS= 1.10

COMPANION LIVE LOAD FACTOR = 1.00

TRUSS PLATE MANUFACTURER IS NOT RESPONSIBLE FOR QUALITY CONTROL IN THE TRUSS MANUFACTURING PLANT .

NAIL VALUES

PLATE	GRIP(DRY) (PSI) MAX	MIN	SHEAR (PLI) MAX	MIN	SECTION (PLI) MAX	MIN
MT20	650	371	1747	788	1987	1873

PLATE PLACEMENT TOL. = 0.250 Inches

PLATE ROTATION TOL. = 5.0 Deg.

JSI GRIP= 0.72 (F) (INPUT = 0.90)
JSI METAL= 0.18 (F) (INPUT = 1.00)

JOB NAME	TRUSS NAME	QUANTITY	PLY	JOB DESC.	DRWG NO.
418649	T18C	1	1	BAYVIEW WELLINGTON TRUSS DESC.	

Tamarack Roof Truss, Burlington

Version 8.630 S Aug 30 2023 MiTek Industries, Inc. Tue Nov 14 11:15:03 2023 Page 1
ID:UaoF4umx8QMX1bo7Q0Zg7Cya5EO-tDDaM9qaCdxYPIDkXHhqKnbwIU02k5PPD6RxBMyJIPs

Scale = 1:34.0

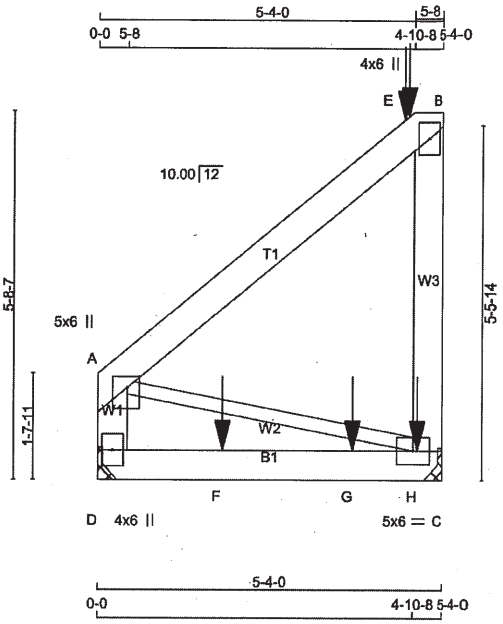

TOTAL WEIGHT = 37 lb

LUMBER

N. L. G. A. RULES

CHORDS	SIZE		LUMBER	DESCR.
A - B	2x6	DRY	No.2	SPF
C - B	2x6	DRY	No.2	SPF
D - A	2x6	DRY	No.2	SPF
D - C	2x6	DRY	No.2	SPF
ALL WEBS	2x3	DRY	No.2	SPF

DRY: SEASONED LUMBER.

PLATES (table is in inches)

JT	TYPE	PLATES	W	LEN	Y	X
A	TMVW+p	MT20	5.0	6.0	2.00	2.25
B	TMV+p	MT20	4.0	6.0		
C	BMVW1-t	MT20	5.0	6.0		
D	BMV1+p	MT20	4.0	6.0		

NOTES-

1) Lateral braces to be a minimum of 2X4 SPF #2.

LICENSED PROFESSIONAL ENGINEER
11/14/23
C. M. HEYENS
100505065
PROVINCE OF ONTARIO

STRUCTURAL COMPONENT ONLY
DWG # TR23111093

DIMENSIONS, SUPPORTS AND LOADINGS SPECIFIED BY FABRICATOR TO BE VERIFIED BY BUILDING DESIGNER

BEARINGS

JT	FACTORED GROSS REACTION VERT	HORZ	MAXIMUM FACTORED GROSS REACTION DOWN	HORZ.	UPLIFT	INPUT BRG IN-SX	REQRD BRG IN-SX
C	1164	0	1164	0	0	MECHANICAL	
D	488	0	488	0	0	MECHANICAL	

A SUITABLE HANGER/MECHANICAL CONNECTION IS REQUIRED AT JOINT C, D. MINIMUM BEARING LENGTH AT JOINT C = 1-8, JOINT D = 1-8.

UNFACTORED REACTIONS

JT	1ST LCASE COMBINED	MAX./MIN. COMPONENT REACTIONS SNOW	LIVE	PERM.LIVE	WIND	DEAD	SOIL
C	807	622 / 0	0 / 0	0 / 0	0 / 0	184 / 0	0 / 0
D	342	243 / 0	0 / 0	0 / 0	0 / 0	99 / 0	0 / 0

BRACING

TOP CHORD TO BE SHEATHED OR MAX. PURLIN SPACING = 6.25 FT.
MAX. UNBRACED BOTTOM CHORD LENGTH = 10.00 FT OR RIGID CEILING DIRECTLY APPLIED.

ALL PITCH BREAKS AND PERIMETER CORNER JOINTS MUST BE LATERALLY RESTRAINED.

LOADING

TOTAL LOAD CASES: (4)

CHORDS

MEMB. FR-TO	MAX. FACTORED FORCE (LBS)	FACTORED VERT. LOAD (PLF) FROM	TO	LC1 MAX CSI (LC)	MAX. UNBRAC LENGTH
A- E	0 / 206	-129.7	-129.7	0.49 (1)	6.25
E- B	0 / 206	-129.7	-129.7	0.49 (1)	6.25
C- B	-1056 / 0	0.0	0.0	0.39 (1)	7.81
D- A	-413 / 0	0.0	0.0	0.03 (1)	7.81
D- F	0 / 0	-18.5	-18.5	0.15 (4)	10.00
F- G	0 / 0	-18.5	-18.5	0.15 (4)	10.00
G- H	0 / 0	-18.5	-18.5	0.15 (4)	10.00
H- C	0 / 0	-18.5	-18.5	0.15 (4)	10.00

WEBS

MEMB. FR-TO	MAX. FACTORED FORCE (LBS)	MAX CSI (LC)
A- C	0 / 0	0.00 (1)

SPECIFIED CONCENTRATED LOADS (LBS)

JT	LOC.	LC1	MAX-	MAX+	FACE	DIR.	TYPE	HEEL	CONN.
E	4-10-8	-376	-376	---	BACK	VERT	TOTAL	---	C1
E	4-11-4	-154	-154	---	BACK	VERT	TOTAL	---	C1
F	1-11-4	-21	-21	---	BACK	VERT	TOTAL	---	C1
G	3-11-4	-21	-21	---	BACK	VERT	TOTAL	---	C1
H	4-11-4	-26	-26	---	BACK	VERT	TOTAL	---	C1

CONNECTION REQUIREMENTS

1) **C1:** A SUITABLE HANGER/MECHANICAL CONNECTION IS REQUIRED.

[M]

DESIGN CRITERIA

SPECIFIED LOADS:

TOP CH.	LL	=	38.3	PSF
	DL	=	6.0	PSF
BOT CH.	LL	=	0.0	PSF
	DL	=	7.4	PSF
TOTAL LOAD		=	51.6	PSF

SPACING = 24.0 IN. C/C

THIS TRUSS IS DESIGNED FOR RESIDENTIAL OR SMALL BUILDING REQUIREMENTS OF PART 9, NBCC 2015

THIS DESIGN COMPLIES WITH:
- PART 9 OF BCBC 2018 , NBC-2019AE
- PART 9 OF OBC 2012 (2019 AMENDMENT)
- CSA 086-14
- TPIC 2014

(55 % OF 54.4 P.S.F. G.S.L. PLUS 8.4 P.S.F. RAIN LOAD) EQUALS 38.3 P.S.F. SPECIFIED ROOF LIVE LOAD

ALLOWABLE DEFL.(TL)= L/360 (0.19")
CALCULATED VERT. DEFL.(TL) = L/ 999 (0.02")

CSI: TC=0.49/1.00 (A-B:1) , BC=0.15/1.00 (C-D:4) , WB=0.00/1.00 (A-C:1) , SSI=0.54/1.00 (A-B:1)

DOL LUMBER=1.00 NAIL=1.00 LS BEND=1.00 COMP=1.00 SHEAR=1.00 TENS= 1.00

COMPANION LIVE LOAD FACTOR = 1.00

AUTOSOLVE RIGHT HEEL ONLY

TRUSS PLATE MANUFACTURER IS NOT RESPONSIBLE FOR QUALITY CONTROL IN THE TRUSS MANUFACTURING PLANT .

NAIL VALUES

PLATE	GRIP(DRY) (PSI) MAX	MIN	SHEAR (PLI) MAX	MIN	SECTION (PLI) MAX	MIN
MT20	650	371	1747	788	1987	1873

PLATE PLACEMENT TOL. = 0.250 Inches

PLATE ROTATION TOL. = 5.0 Deg.

JSI GRIP= 0.26 (C) (INPUT = 0.90)
JSI METAL= 0.28 (B) (INPUT = 1.00)

JOB NAME	TRUSS NAME	QUANTITY	PLY	JOB DESC.	DRWG NO.
418651	T19	1	2	BAYVIEW WELLINGTON TRUSS DESC.	

Tamarack Roof Truss, Burlington

Version 8.630 S Aug 30 2023 MiTek Industries, Inc. Tue Nov 14 12:09:20 2023 Page 1
ID:UaoF4umx8QMX1bo7Q0Zq7Cya5EO-0pWsxrFaALHQfqiiqpdcrc ZTOc9MxooALvn?5yJHcz

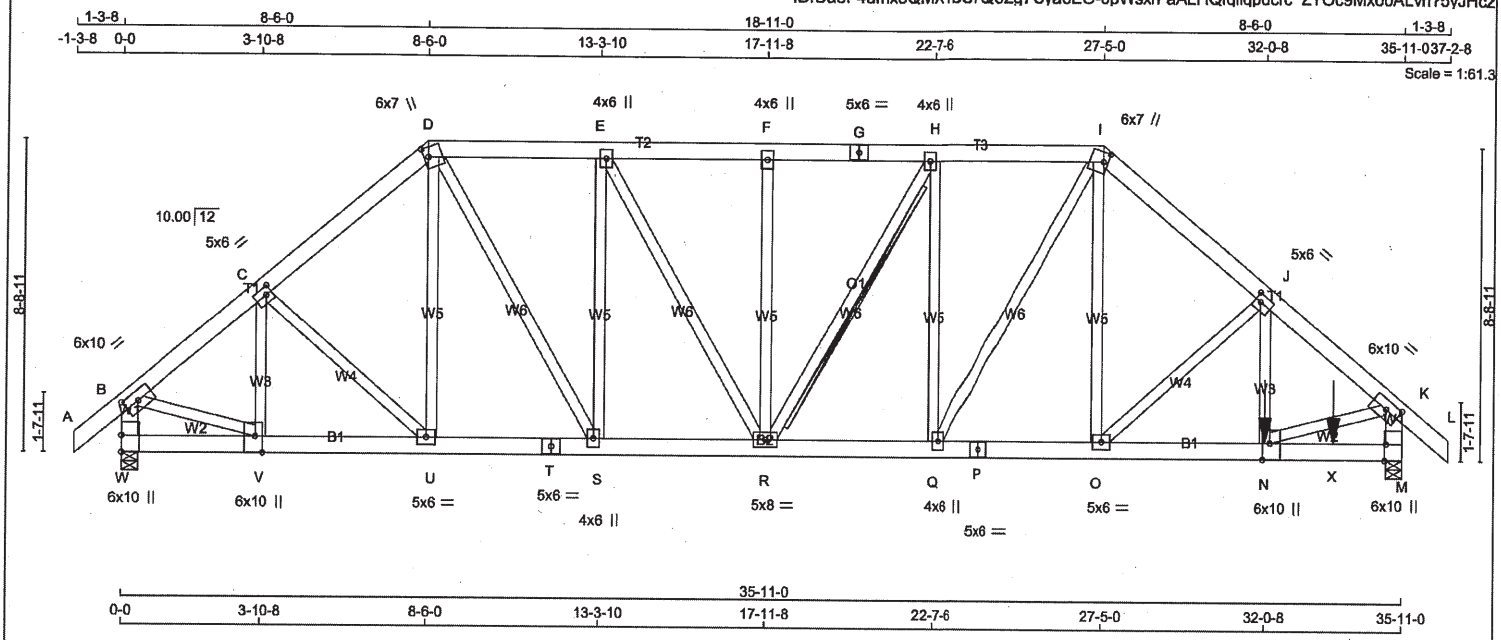

TOTAL WEIGHT = 2 X 264 = 529 lb [M]

LUMBER

N. L. G. A. RULES

CHORDS	SIZE		LUMBER	DESCR.
A - D	2x6	DRY	No.2	SPF
D - G	2x6	DRY	No.2	SPF
G - I	2x6	DRY	No.2	SPF
I - L	2x6	DRY	No.2	SPF
W - B	2x6	DRY	No.2	SPF
M - K	2x6	DRY	No.2	SPF
W - T	2x6	DRY	2100F 1.8E	SPF
T - P	2x6	DRY	2100F 1.8E	SPF
P - M	2x6	DRY	2100F 1.8E	SPF
ALL WEBS EXCEPT	2x4	DRY	No.2	SPF

DRY: SEASONED LUMBER.

DESIGN CONSISTS OF 2 TRUSSES BUILT SEPARATELY THEN FASTENED TOGETHER AS FOLLOWS:

CHORDS	#ROWS	SURFACE SPACING (IN)	LOAD(PLF)
TOP CHORDS : (0.122"X3") SPIRAL NAILS			
A- D	2	12	TOP
D- G	2	12	TOP
G- I	2	12	TOP
I- L	2	12	TOP
W- B	2	12	TOP
M- K	2	12	TOP
BOTTOM CHORDS : (0.122"X3") SPIRAL NAILS			
W- T	2	12	TOP
T- P	2	12	TOP
P- M	2	12	SIDE(197.8)
WEBS : (0.122"X3") SPIRAL NAILS			
J- N	2	3	SIDE(1208.8)
2x4	2	3	
U- C	1	6	
U- D	1	6	
S- D	1	6	
E- S	1	6	
R- E	1	6	
F- R	1	6	
R- H	1	6	
H- Q	1	6	
Q- I	1	6	
O- I	1	6	
O- J	1	6	

LICENSED PROFESSIONAL ENGINEER
11/14/23
C. M. HEYENS
100505065
PROVINCE OF ONTARIO

STRUCTURAL COMPONENT ONLY
DWG # TR23111109

DIMENSIONS, SUPPORTS AND LOADINGS SPECIFIED BY FABRICATOR TO BE VERIFIED BY BUILDING DESIGNER

BEARINGS

JT	FACTORED GROSS REACTION VERT	HORZ	MAXIMUM FACTORED GROSS REACTION DOWN	HORZ	UPLIFT	INPUT BRG IN-SX	REQRD BRG IN-SX
W	3473	0	3473	0	0	5-8	1-14
M	8407	0	8407	0	0	5-8	5-8

UNFACTORED REACTIONS

JT	1ST LCASE COMBINED	MAX./MIN. COMPONENT REACTIONS SNOW	LIVE	PERM.LIVE	WIND	DEAD	SOIL
W	2416	1812 / 0	0 / 0	0 / 0	0 / 0	603 / 0	0 / 0
M	5841	4420 / 0	0 / 0	0 / 0	0 / 0	1421 / 0	0 / 0

BEARING MATERIAL TO BE SPF NO.2 OR BETTER AT JOINT(S) W, M

BRACING

TOP CHORD TO BE SHEATHED OR MAX. PURLIN SPACING = 4.00 FT.
MAX. UNBRACED BOTTOM CHORD LENGTH = 10.00 FT OR RIGID CEILING DIRECTLY APPLIED.

ALL PITCH BREAKS AND PERIMETER CORNER JOINTS MUST BE LATERALLY RESTRAINED.

2x4 DRY SPF No.2 T-BRACE AT H-R

FASTEN T AND I-BRACES TO NARROW EDGE OF WEB WITH ONE ROW PER PLY OF 3" COMMON WIRE NAILS @ 6" O.C. WITH 3" MINIMUM END DISTANCE. BRACE MUST COVER 90% OF WEB LENGTH.

END VERTICAL(S) MUST BE SHEATHED OR HAVE BRACES AS INDICATED IN THE MAX. UNBRACED LENGTH COLUMN OF THE TABLE BELOW

LOADING

TOTAL LOAD CASES: (4)

CHORDS

MEMB. FR-TO	MAX. FACTORED FORCE (LBS)	FACTORED VERT. LOAD (PLF) FROM	TO	LC1	MAX CSI (LC)	MAX. UNBRAC LENGTH
A- B	0 / 60	-129.7	-129.7	0.05 (1)	10.00	
B- C	-3498 / 0	-129.7	-129.7	0.11 (1)	5.87	
C- D	-3627 / 0	-129.7	-129.7	0.11 (1)	5.79	
D- E	-3738 / 0	-129.7	-129.7	0.12 (1)	5.71	
E- F	-4259 / 0	-129.7	-129.7	0.13 (1)	5.43	
F- G	-4259 / 0	-129.7	-129.7	0.14 (1)	5.42	
G- H	-4259 / 0	-129.7	-129.7	0.14 (1)	5.42	
H- I	-4446 / 0	-129.7	-129.7	0.14 (1)	5.33	
I- J	-5423 / 0	-129.7	-129.7	0.16 (1)	4.91	
J- K	-8729 / 0	-129.7	-129.7	0.18 (1)	4.00	
K- L	0 / 60	-129.7	-129.7	0.05 (1)	10.00	
W- B	-3422 / 0	0.0	0.0	0.12 (1)	7.54	
M- K	-7941 / 0	0.0	0.0	0.29 (1)	5.33	
W- V	0 / 0	-18.5	-18.5	0.01 (1)	10.00	
V- U	0 / 2718	-18.5	-18.5	0.08 (1)	10.00	
U- T	0 / 2752	-18.5	-18.5	0.09 (1)	10.00	
T- S	0 / 2752	-18.5	-18.5	0.09 (1)	10.00	
S- R	0 / 3739	-18.5	-18.5	0.11 (1)	10.00	
R- Q	0 / 4447	-18.5	-18.5	0.13 (1)	10.00	
Q- P	0 / 4184	-18.5	-18.5	0.12 (1)	10.00	
P- O	0 / 4184	-18.5	-18.5	0.12 (1)	10.00	
O- N	0 / 6718	-18.5	-18.5	0.20 (1)	10.00	
N- X	0 / 0	-18.5	-18.5	0.17 (1)	10.00	
X- M	0 / 0	-18.5	-18.5	0.17 (1)	10.00	

WEBS

MEMB. FR-TO	MAX. FACTORED FORCE (LBS)	MAX CSI (LC)
V- C	-742 / 0	0.08 (1)
C- U	0 / 43	0.00 (1)
U- D	0 / 96	0.01 (4)
D- S	0 / 1958	0.17 (1)
S- E	-1592 / 0	0.80 (1)
E- R	0 / 1060	0.09 (1)
R- F	-550 / 0	0.28 (1)
R- H	-383 / 0	0.15 (1)
Q- H	-336 / 0	0.17 (1)
Q- I	0 / 521	0.05 (1)
O- I	0 / 2468	0.22 (1)
O- J	-3486 / 0	0.89 (1)
N- J	0 / 3866	0.34 (1)
B- V	0 / 2828	0.25 (1)
N- K	0 / 6990	0.62 (1)

SPECIFIED CONCENTRATED LOADS (LBS)

JT	LOC.	LC1	MAX-	MAX+	FACE	DIR.	TYPE	HEEL	CONN.
N	32-0-8	-3747	-3747	---	BACK	VERT	TOTAL	---	C1
X	33-11-12	-547	-547	---	BACK	VERT	TOTAL	---	C1

DESIGN CRITERIA

SPECIFIED LOADS:

TOP CH.	LL	=	38.3	PSF
	DL	=	6.0	PSF
BOT CH.	LL	=	0.0	PSF
	DL	=	7.4	PSF
TOTAL LOAD		=	51.6	PSF

SPACING = 24.0 IN. C/C

LOADING IN FLAT SECTION BASED ON A SLOPE OF 6.00/12

THIS TRUSS IS DESIGNED FOR RESIDENTIAL OR SMALL BUILDING REQUIREMENTS OF PART 9, NBCC 2015

THIS DESIGN COMPLIES WITH:
- PART 9 OF BCBC 2018 , NBC-2019AE
- PART 9 OF OBC 2012 (2019 AMENDMENT)
- CSA 086-14
- TPIC 2014

(55 % OF 54.4 P.S.F. G.S.L. PLUS 8.4 P.S.F. RAIN LOAD) EQUALS 38.3 P.S.F. SPECIFIED ROOF LIVE LOAD

ALLOWABLE DEFL.(LL)= L/360 (1.20")
CALCULATED VERT. DEFL.(LL) = L/ 999 (0.07")
ALLOWABLE DEFL.(TL)= L/360 (1.20")
CALCULATED VERT. DEFL.(TL) = L/ 999 (0.12")

CSI: TC=0.29/1.00 (K-M:1) , BC=0.20/1.00 (N-O:1) , WB=0.89/1.00 (J-O:1) , SSI=0.15/1.00 (M-N:1)

DOL LUMBER=1.00 NAIL=1.00 LS BEND=1.00 COMP=1.00 SHEAR=1.00 TENS= 1.00

COMPANION LIVE LOAD FACTOR = 1.00

TRUSS PLATE MANUFACTURER IS NOT RESPONSIBLE FOR QUALITY CONTROL IN THE TRUSS MANUFACTURING PLANT .

NAIL VALUES

PLATE	GRIP(DRY) (PSI) MAX	MIN	SHEAR (PLI) MAX	MIN	SECTION (PLI) MAX	MIN
MT20	650	371	1747	788	1987	1873

PLATE PLACEMENT TOL. = 0.250 Inches

PLATE ROTATION TOL. = 5.0 Deg.

JSI GRIP= 0.89 (B) (INPUT = 0.90)
JSI METAL= 0.98 (V) (INPUT = 1.00)

CONTINUED ON PAGE 2

V- B	1	6
N- K	1	6

NAILS TO BE DRIVEN FROM ONE SIDE ONLY.

GIRDER NAILING ASSUMES NAILED HANGERS ARE FASTENED WITH MIN. 3-0 INCH NAILS.

PLATES (table is in inches)

JT	TYPE	PLATES	W	LEN	Y	X
B	TMVW-t	MT20	6.0	10.0	3.00	4.75
C	TMWW-t	MT20	5.0	6.0	2.50	2.00
D	TTWW+m	MT20	6.0	7.0	3.25	1.50
E	TMWW+t	MT20	4.0	6.0		
F	TMW+w	MT20	4.0	6.0		
G	TS-t	MT20	5.0	6.0		
H	TMWW+t	MT20	4.0	6.0		
I	TTWW+m	MT20	6.0	7.0	3.25	1.50
J	TMWW-t	MT20	5.0	6.0	2.50	2.00
K	TMVW-t	MT20	6.0	10.0	3.00	4.75
M	BMV1+t	MT20	6.0	10.0	Edge	0.50
N	BMWW+t	MT20	6.0	10.0	Edge	2.50
O	BMWW-t	MT20	5.0	6.0		
P	BS-t	MT20	5.0	6.0		
Q	BMWW+t	MT20	4.0	6.0		
R	BMWWW-t	MT20	5.0	8.0		
S	BMWW+t	MT20	4.0	6.0		
T	BS-t	MT20	5.0	6.0		
U	BMWW-t	MT20	5.0	6.0		
V	BMWW+t	MT20	6.0	10.0	Edge	2.50
W	BMV1+t	MT20	6.0	10.0	5.50	

Edge - INDICATES REFERENCE CORNER OF PLATE TOUCHES EDGE OF CHORD.

NOTES-

1) Lateral braces to be a minimum of 2X4 SPF #2.

CONNECTION REQUIREMENTS

1) **C1:** A SUITABLE HANGER/MECHANICAL CONNECTION IS REQUIRED.

LICENSED PROFESSIONAL ENGINEER
11/14/23
C. M. HEYENS
100505065
PROVINCE OF ONTARIO

STRUCTURAL COMPONENT ONLY
DWG # TR23111109

JOB NAME	TRUSS NAME	QUANTITY	PLY	JOB DESC.	DRWG NO.
418651	T20	1	2	BAYVIEW WELLINGTON TRUSS DESC.	

Tamarack Roof Truss, Burlington

Version 8.630 S Aug 30 2023 MiTek Industries, Inc. Tue Nov 14 12:09:21 2023 Page 1
ID:UaoF4umx8QMX1bo7Q0Zq7Cya5EO-U?4E8BGDxePHG HuOX8rNqXkzorZ5RXyP?fKYXyJHcy

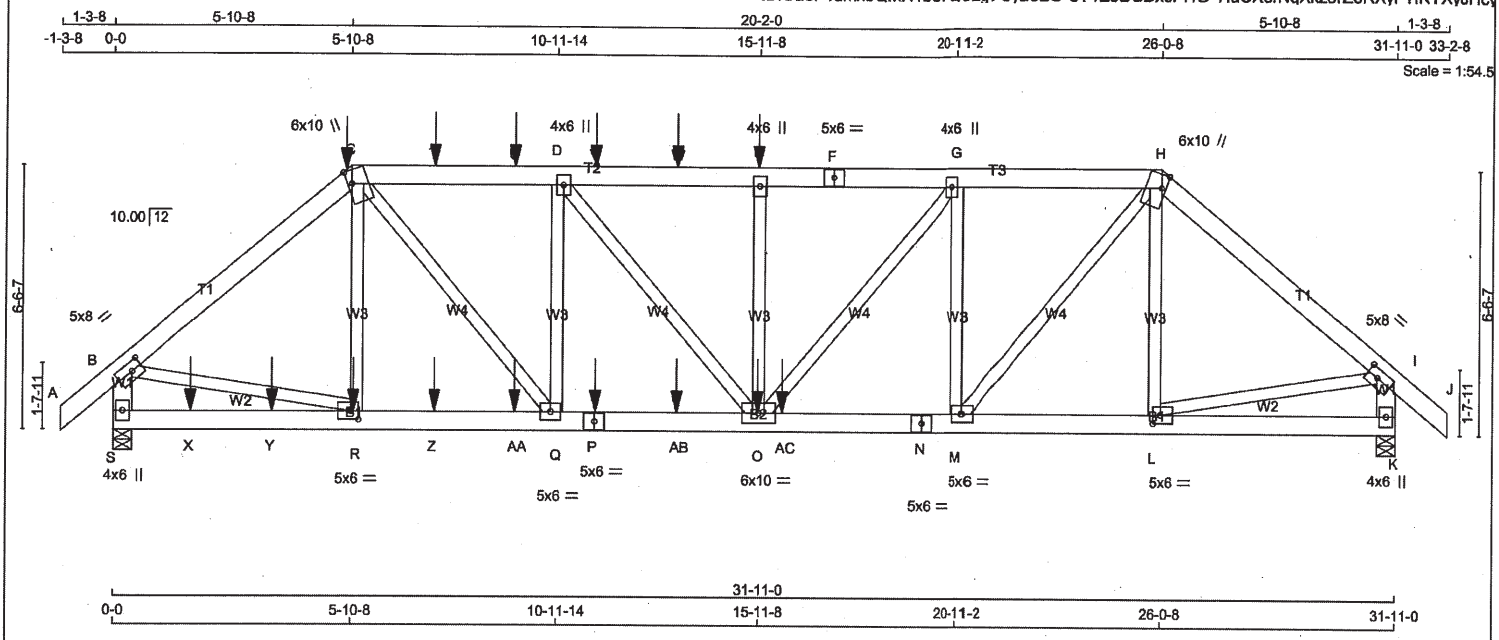

TOTAL WEIGHT = 2 X 210 = 419 lb

LUMBER

N. L. G. A. RULES

CHORDS	SIZE		LUMBER	DESCR.
A - C	2x6	DRY	No.2	SPF
C - F	2x6	DRY	No.2	SPF
F - H	2x6	DRY	No.2	SPF
H - J	2x6	DRY	No.2	SPF
S - B	2x6	DRY	No.2	SPF
K - I	2x6	DRY	No.2	SPF
S - P	2x6	DRY	No.2	SPF
P - N	2x6	DRY	No.2	SPF
N - K	2x6	DRY	No.2	SPF
ALL WEBS EXCEPT	2x4	DRY	No.2	SPF

DRY: SEASONED LUMBER.

DESIGN CONSISTS OF 2 TRUSSES BUILT SEPARATELY THEN FASTENED TOGETHER AS FOLLOWS:

CHORDS	#ROWS	SURFACE SPACING (IN)	LOAD(PLF)
TOP CHORDS : (0.122"X3") SPIRAL NAILS			
A- C	2	12	SIDE(122.0)
C- F	2	12	SIDE(183.1)
F- H	2	12	TOP
H- J	2	12	TOP
S- B	2	12	TOP
K- I	2	12	TOP
BOTTOM CHORDS : (0.122"X3") SPIRAL NAILS			
S- P	2	12	SIDE(183.1)
P- N	2	12	SIDE(183.1)
N- K	2	12	TOP
WEBS : (0.122"X3") SPIRAL NAILS			
2x4	1	6	

NAILS TO BE DRIVEN FROM ONE SIDE ONLY.

GIRDER NAILING ASSUMES NAILED HANGERS ARE FASTENED WITH MIN. 3-0 INCH NAILS.

TOP - COMPONENTS ARE LOADED FROM THE TOP AND MUST BE PLACED ON TOP EDGE OF ALL PLIES FOR THE LOAD TO BE TRANSFERRED TO EACH PLY.

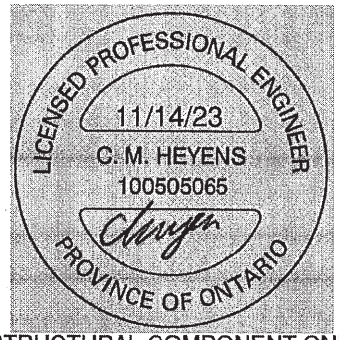

STRUCTURAL COMPONENT ONLY
DWG # TR23111110

DIMENSIONS, SUPPORTS AND LOADINGS SPECIFIED BY FABRICATOR TO BE VERIFIED BY BUILDING DESIGNER

BEARINGS

JT	FACTORED GROSS REACTION VERT	HORZ	MAXIMUM FACTORED GROSS REACTION DOWN	HORZ	UPLIFT	INPUT BRG IN-SX	REQRD BRG IN-SX
S	5627	0	5627	0	0	5-8	3-10
K	4405	0	4405	0	0	5-8	2-6

UNFACTORED REACTIONS

MAX./MIN. COMPONENT REACTIONS

JT	1ST LCASE COMBINED	SNOW	LIVE	PERM.LIVE	WIND	DEAD	SOIL
S	3906	2982 / 0	0 / 0	0 / 0	0 / 0	923 / 0	0 / 0
K	3059	2321 / 0	0 / 0	0 / 0	0 / 0	738 / 0	0 / 0

BEARING MATERIAL TO BE SPF NO.2 OR BETTER AT JOINT(S) S, K

BRACING

TOP CHORD TO BE SHEATHED OR MAX. PURLIN SPACING = 4.16 FT.
MAX. UNBRACED BOTTOM CHORD LENGTH = 10.00 FT OR RIGID CEILING DIRECTLY APPLIED.

ALL PITCH BREAKS AND PERIMETER CORNER JOINTS MUST BE LATERALLY RESTRAINED.

LOADING

TOTAL LOAD CASES: (4)

CHORDS

MEMB. FR-TO	MAX. FACTORED FORCE (LBS)	FACTORED VERT. LOAD (PLF)	LC1 FROM	LC1 TO	MAX CSI (LC)	MAX. UNBRAC LENGTH
A- B	0 / 60	-129.7	-129.7	0.05 (1)	10.00	
B- C	-6371 / 0	-129.7	-129.7	0.30 (1)	4.46	
C- T	-7006 / 0	-129.7	-129.7	0.20 (1)	4.39	
T- U	-7006 / 0	-129.7	-129.7	0.20 (1)	4.39	
U- D	-7006 / 0	-129.7	-129.7	0.20 (1)	4.39	
D- V	-7870 / 0	-129.7	-129.7	0.22 (1)	4.16	
V- W	-7870 / 0	-129.7	-129.7	0.22 (1)	4.16	
W- E	-7870 / 0	-129.7	-129.7	0.22 (1)	4.16	
E- F	-7870 / 0	-129.7	-129.7	0.21 (1)	4.17	
F- G	-7870 / 0	-129.7	-129.7	0.21 (1)	4.17	
G- H	-6229 / 0	-129.7	-129.7	0.18 (1)	4.63	
H- I	-4824 / 0	-129.7	-129.7	0.26 (1)	5.03	
I- J	0 / 60	-129.7	-129.7	0.05 (1)	10.00	
S- B	-5565 / 0	0.0	0.0	0.20 (1)	6.23	
K- I	-4352 / 0	0.0	0.0	0.16 (1)	6.87	
S- X	0 / 0	-18.5	-18.5	0.08 (4)	10.00	
X- Y	0 / 0	-18.5	-18.5	0.08 (4)	10.00	
Y- R	0 / 0	-18.5	-18.5	0.08 (4)	10.00	
R- Z	0 / 4874	-18.5	-18.5	0.42 (1)	10.00	
Z- AA	0 / 4874	-18.5	-18.5	0.42 (1)	10.00	
AA- Q	0 / 4874	-18.5	-18.5	0.42 (1)	10.00	
Q- P	0 / 7007	-18.5	-18.5	0.62 (1)	10.00	
P- AB	0 / 7007	-18.5	-18.5	0.62 (1)	10.00	
AB- O	0 / 7007	-18.5	-18.5	0.62 (1)	10.00	
O- AC	0 / 6230	-18.5	-18.5	0.64 (1)	10.00	
AC- N	0 / 6230	-18.5	-18.5	0.64 (1)	10.00	
N- M	0 / 6230	-18.5	-18.5	0.64 (1)	10.00	
M- L	0 / 3681	-18.5	-18.5	0.30 (1)	10.00	
L- K	0 / 0	-18.5	-18.5	0.04 (4)	10.00	

WEBS

MEMB. FR-TO	MAX. FACTORED FORCE (LBS)	MAX CSI (LC)
R- C	-243 / 109	0.05 (1)
Q- C	0 / 3301	0.29 (1)
Q- D	-1793 / 0	0.40 (1)
D- O	0 / 1363	0.12 (1)
O- E	-597 / 0	0.13 (1)
O- G	0 / 2591	0.23 (1)
M- G	-2709 / 0	0.60 (1)
M- H	0 / 3946	0.35 (1)
L- H	-609 / 0	0.14 (1)
B- R	0 / 4963	0.44 (1)
L- I	0 / 3758	0.33 (1)

SPECIFIED CONCENTRATED LOADS (LBS)

JT	LOC.	LC1	MAX-	MAX+	FACE	DIR.	TYPE	HEEL	CONN.
C	5-10-8	-26	-26	—	FRONT	VERT	DEAD	—	C1
C	5-10-8	-404	-404	—	BACK	VERT	TOTAL	—	C1
C	5-10-8	-321	-321	—	FRONT	VERT	SNOW	—	C1
E	15-11-4	-10	-10	—	BACK	VERT	TOTAL	—	C1
O	15-11-4	-193	-193	—	BACK	VERT	TOTAL	—	C1
P	11-11-4	-193	-193	—	BACK	VERT	TOTAL	—	C1
R	5-11-4	-193	-193	—	BACK	VERT	TOTAL	—	C1
T	7-11-4	-10	-10	—	BACK	VERT	TOTAL	—	C1
U	9-11-4	-10	-10	—	BACK	VERT	TOTAL	—	C1

[M]

DESIGN CRITERIA

*** SPECIAL LOADS ANALYSIS ***
GEOMETRY AND/OR BASIC LOADS CHANGED BY USER.
LOADS WERE DERIVED FROM USER INPUT
NO FURTHER MODIFICATIONS WERE MADE

SPECIFIED LOADS:

TOP CH.	LL	=	38.3	PSF
	DL	=	6.0	PSF
BOT CH.	LL	=	0.0	PSF
	DL	=	7.4	PSF
TOTAL LOAD		=	51.6	PSF

SPACING = 24.0 IN. C/C

LOADING IN FLAT SECTION BASED ON A SLOPE OF 6.00/12

*** NON STANDARD GIRDER ***
ADDT'L USER-DEFINED LOADS APPLIED TO ALL LOAD CASES.

THIS TRUSS IS DESIGNED FOR RESIDENTIAL OR SMALL BUILDING REQUIREMENTS OF PART 9, NBCC 2015

THIS DESIGN COMPLIES WITH:
- PART 9 OF BCBC 2018 , NBC-2019AE
- PART 9 OF OBC 2012 (2019 AMENDMENT)
- CSA 086-14
- TPIC 2014

(55 % OF 54.4 P.S.F. G.S.L. PLUS 8.4 P.S.F. RAIN LOAD) EQUALS 38.3 P.S.F. SPECIFIED ROOF LIVE LOAD

ALLOWABLE DEFL.(LL)= L/360 (1.06")
CALCULATED VERT. DEFL.(LL) = L/ 999 (0.13")
ALLOWABLE DEFL.(TL)= L/360 (1.06")
CALCULATED VERT. DEFL.(TL) = L/ 999 (0.22")

CSI: TC=0.30/1.00 (B-C:1) , BC=0.64/1.00 (M-O:1) , WB=0.60/1.00 (G-M:1) , SSI=0.62/1.00 (M-O:1)

DOL LUMBER=1.00 NAIL=1.00 LS BEND=1.00 COMP=1.00 SHEAR=1.00 TENS= 1.00

COMPANION LIVE LOAD FACTOR = 1.00

TRUSS PLATE MANUFACTURER IS NOT RESPONSIBLE FOR QUALITY CONTROL IN THE TRUSS MANUFACTURING PLANT .

NAIL VALUES

PLATE	GRIP(DRY) (PSI) MAX	MIN	SHEAR (PLI) MAX	MIN	SECTION (PLI) MAX	MIN
MT20	650	371	1747	788	1987	1873

PLATE PLACEMENT TOL. = 0.250 Inches

PLATE ROTATION TOL. = 5.0 Deg.

JSI GRIP= 0.86 (Q) (INPUT = 0.90)
JSI METAL= 0.62 (P) (INPUT = 1.00)

CONTINUED ON PAGE 2

JOB NAME	TRUSS NAME	QUANTITY	PLY	JOB DESC.	DRWG NO.
418651	T20	1	2	BAYVIEW WELLINGTON TRUSS DESC.	

PLATES (table is in inches)

JT	TYPE	PLATES	W	LEN	Y	X
B	TMVW-t	MT20	5.0	8.0	2.50	3.25
C	TTWW+m	MT20	6.0	10.0	4.00	1.25
D	TMWW+t	MT20	4.0	6.0		
E	TMW+w	MT20	4.0	6.0		
F	TS-t	MT20	5.0	6.0		
G	TMWW+t	MT20	4.0	6.0		
H	TTWW+m	MT20	6.0	10.0	4.00	1.25
I	TMVW-t	MT20	5.0	8.0	2.50	3.25
K	BMV1+p	MT20	4.0	6.0		
L	BMWW-t	MT20	5.0	6.0	2.50	2.25
M	BMWW-t	MT20	5.0	6.0		
N	BS-t	MT20	5.0	6.0		
O	BMWWW-t	MT20	6.0	10.0		
P	BS-t	MT20	5.0	6.0		
Q	BMWW-t	MT20	5.0	6.0		
R	BMWW-t	MT20	5.0	6.0	2.50	2.25
S	BMV1+p	MT20	4.0	6.0		

NOTES-

1) Lateral braces to be a minimum of 2X4 SPF #2.

SPECIFIED CONCENTRATED LOADS (LBS)

JT	LOC.	LC1	MAX-	MAX+	FACE	DIR.	TYPE	HEEL	CONN.
V	11-11-4	-10	-10	—	BACK	VERT	TOTAL	—	C1
W	13-11-4	-10	-10	—	BACK	VERT	TOTAL	—	C1
X	1-11-4	-29	-29	—	BACK	VERT	TOTAL	—	C1
Y	3-11-4	-29	-29	—	BACK	VERT	TOTAL	—	C1
Z	7-11-4	-193	-193	—	BACK	VERT	TOTAL	—	C1
AA	9-11-4	-193	-193	—	BACK	VERT	TOTAL	—	C1
AB	13-11-4	-193	-193	—	BACK	VERT	TOTAL	—	C1
AC	16-6-8	-1398	-1398	—	BACK	VERT	TOTAL	—	C1

CONNECTION REQUIREMENTS

1) **C1:** A SUITABLE HANGER/MECHANICAL CONNECTION IS REQUIRED.

LICENSED PROFESSIONAL ENGINEER
11/14/23
C. M. HEYENS
100505065
PROVINCE OF ONTARIO

STRUCTURAL COMPONENT ONLY
DWG # TR23111110

JOB NAME	TRUSS NAME	QUANTITY	PLY	JOB DESC.	DRWG NO.
418651	T21	1	1	BAYVIEW WELLINGTON TRUSS DESC.	

Tamarack Roof Truss, Burlington

Version 8.630 S Aug 30 2023 MiTek Industries, Inc. Tue Nov 14 12:09:23 2023 Page 1

ID:UaoF4umx8QMX1bo7Q0Zg7Cya5EO-ROC?ZtHTTGg WHRHWxAJSFc rcbEZF1Esl8RcPyJHcw

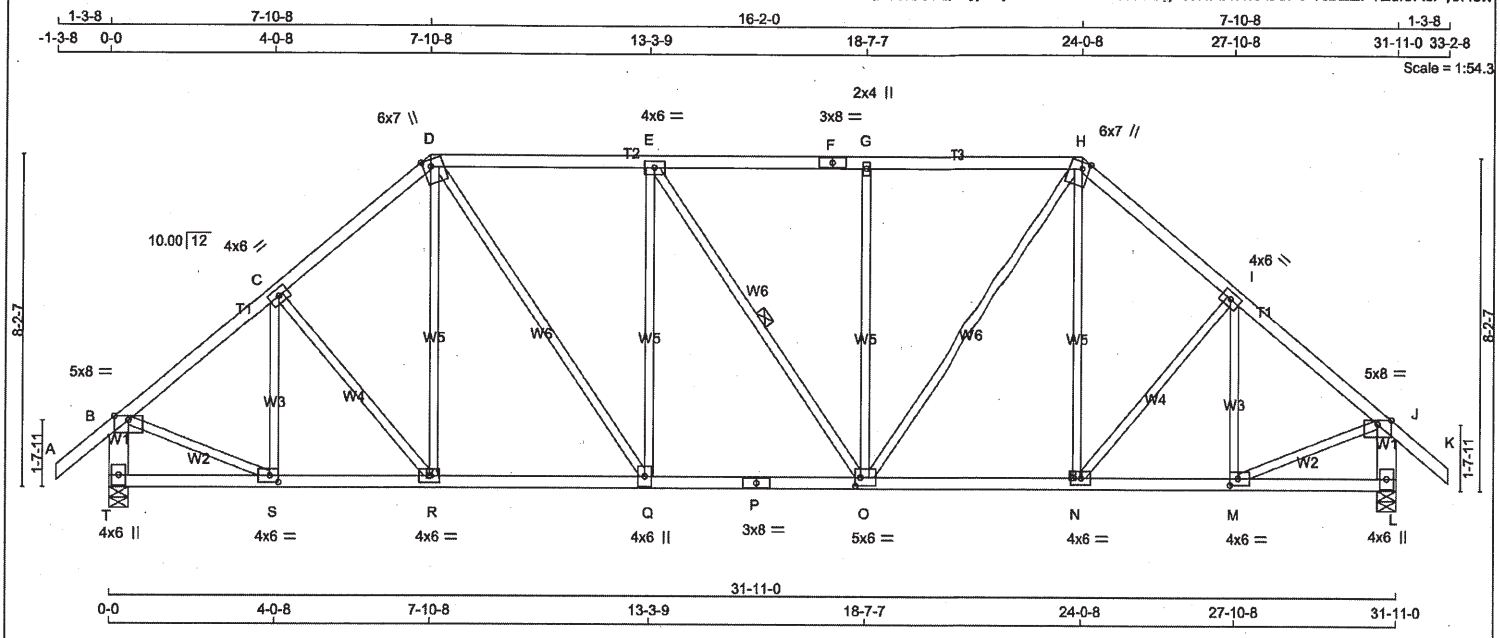

TOTAL WEIGHT = 157 lb [M]

LUMBER

N. L. G. A. RULES

CHORDS	SIZE		LUMBER	DESCR.
A - D	2x4	DRY	No.2	SPF
D - F	2x4	DRY	No.2	SPF
F - H	2x4	DRY	No.2	SPF
H - K	2x4	DRY	No.2	SPF
T - B	2x6	DRY	No.2	SPF
L - J	2x6	DRY	No.2	SPF
T - P	2x4	DRY	No.2	SPF
P - L	2x4	DRY	No.2	SPF
ALL WEBS EXCEPT	2x3	DRY	No.2	SPF

DRY: SEASONED LUMBER.

PLATES (table is in inches)

JT	TYPE	PLATES	W	LEN	Y	X
B	TMVW-p	MT20	5.0	8.0	Edge	
C, E, I						
C	TMWW-t	MT20	4.0	6.0		
D	TTWW+m	MT20	6.0	7.0	2.00	2.25
F	TS-t	MT20	3.0	8.0		
G	TMW+w	MT20	2.0	4.0		
H	TTWW+m	MT20	6.0	7.0	2.00	2.25
J	TMVW-p	MT20	5.0	8.0	Edge	
L	BMV1+p	MT20	4.0	6.0		
M	BMWW-t	MT20	4.0	6.0	2.00	2.50
N	BMWW-t	MT20	4.0	6.0		
O	BMWWW-t	MT20	5.0	6.0	2.50	1.50
P	BS-t	MT20	3.0	8.0		
Q	BMWW+t	MT20	4.0	6.0		
R	BMWW-t	MT20	4.0	6.0		
S	BMWW-t	MT20	4.0	6.0	2.00	2.50
T	BMV1+p	MT20	4.0	6.0		

Edge - INDICATES REFERENCE CORNER OF PLATE TOUCHES EDGE OF CHORD.

NOTES-

1) Lateral braces to be a minimum of 2X4 SPF #2.

LICENSED PROFESSIONAL ENGINEER
11/14/23
C. M. HEYENS
100505065
PROVINCE OF ONTARIO

STRUCTURAL COMPONENT ONLY
DWG # TR23111111

DIMENSIONS, SUPPORTS AND LOADINGS SPECIFIED BY FABRICATOR TO BE VERIFIED BY BUILDING DESIGNER

BEARINGS

JT	FACTORED GROSS REACTION VERT	HORZ	MAXIMUM FACTORED GROSS REACTION DOWN	HORZ	UPLIFT	INPUT BRG IN-SX	REQRD BRG IN-SX
T	2545	0	2545	0	0	5-8	2-12
L	2545	0	2545	0	0	5-8	2-12

UNFACTORED REACTIONS

JT	1ST LCASE COMBINED	MAX./MIN. COMPONENT REACTIONS SNOW	LIVE	PERM.LIVE	WIND	DEAD	SOIL
T	1771	1326 / 0	0 / 0	0 / 0	0 / 0	444 / 0	0 / 0
L	1771	1326 / 0	0 / 0	0 / 0	0 / 0	444 / 0	0 / 0

BEARING MATERIAL TO BE SPF NO.2 OR BETTER AT JOINT(S) T, L

BRACING

TOP CHORD TO BE SHEATHED OR MAX. PURLIN SPACING = 3.69 FT.
MAX. UNBRACED BOTTOM CHORD LENGTH = 10.00 FT OR RIGID CEILING DIRECTLY APPLIED.

ALL PITCH BREAKS AND PERIMETER CORNER JOINTS MUST BE LATERALLY RESTRAINED.

1 LATERAL BRACE(S) AT 1/ 2 LENGTH OF E-O.

END VERTICAL(S) MUST BE SHEATHED OR HAVE BRACES AS INDICATED IN THE MAX. UNBRACED LENGTH COLUMN OF THE TABLE BELOW

LOADING

TOTAL LOAD CASES: (4)

CHORDS

MEMB. FR-TO	MAX. FACTORED FORCE (LBS)	FACTORED VERT. LOAD (PLF) FROM	TO	LC1	MAX CSI (LC)	MAX. UNBRAC LENGTH
A- B	0 / 58	-129.7	-129.7	0.18 (1)	10.00	
B- C	-2356 / 0	-129.7	-129.7	0.44 (1)	4.03	
C- D	-2365 / 0	-129.7	-129.7	0.44 (1)	4.02	
D- E	-2370 / 0	-129.7	-129.7	0.66 (1)	3.69	
E- F	-2368 / 0	-129.7	-129.7	0.66 (1)	3.69	
F- G	-2368 / 0	-129.7	-129.7	0.66 (1)	3.69	
G- H	-2368 / 0	-129.7	-129.7	0.65 (1)	3.71	
H- I	-2365 / 0	-129.7	-129.7	0.44 (1)	4.02	
I- J	-2356 / 0	-129.7	-129.7	0.44 (1)	4.03	
J- K	0 / 58	-129.7	-129.7	0.18 (1)	10.00	
T- B	-2510 / 0	0.0	0.0	0.17 (1)	6.53	
L- J	-2510 / 0	0.0	0.0	0.17 (1)	6.54	
T- S	0 / 0	-18.5	-18.5	0.06 (4)	10.00	
S- R	0 / 1839	-18.5	-18.5	0.35 (1)	10.00	
R- Q	0 / 1784	-18.5	-18.5	0.34 (1)	10.00	
Q- P	0 / 2371	-18.5	-18.5	0.44 (1)	10.00	
P- O	0 / 2371	-18.5	-18.5	0.44 (1)	10.00	
O- N	0 / 1784	-18.5	-18.5	0.34 (1)	10.00	
N- M	0 / 1839	-18.5	-18.5	0.35 (1)	10.00	
M- L	0 / 0	-18.5	-18.5	0.06 (4)	10.00	

WEBS

MEMB. FR-TO	MAX. FACTORED FORCE (LBS)	MAX CSI (LC)
R- D	0 / 160	0.04 (4)
D- Q	0 / 1036	0.23 (1)
Q- E	-753 / 0	0.99 (1)
E- O	-4 / 0	0.00 (1)
O- G	-752 / 0	0.99 (1)
O- H	0 / 1032	0.23 (1)
N- H	0 / 162	0.04 (4)
N- I	-88 / 0	0.06 (1)
M- I	-525 / 0	0.19 (1)
M- J	0 / 1932	0.43 (1)
C- R	-89 / 0	0.06 (1)
S- C	-524 / 0	0.19 (1)
B- S	0 / 1932	0.43 (1)

DESIGN CRITERIA

SPECIFIED LOADS:

TOP CH.	LL	=	38.3	PSF
	DL	=	6.0	PSF
BOT CH.	LL	=	0.0	PSF
	DL	=	7.4	PSF
TOTAL LOAD		=	51.6	PSF

SPACING = 24.0 IN. C/C

LOADING IN FLAT SECTION BASED ON A SLOPE OF 6.00/12

THIS TRUSS IS DESIGNED FOR RESIDENTIAL OR SMALL BUILDING REQUIREMENTS OF PART 9, NBCC 2015

THIS DESIGN COMPLIES WITH:
- PART 9 OF BCBC 2018 , NBC-2019AE
- PART 9 OF OBC 2012 (2019 AMENDMENT)
- CSA 086-14
- TPIC 2014

(55 % OF 54.4 P.S.F. G.S.L. PLUS 8.4 P.S.F. RAIN LOAD) EQUALS 38.3 P.S.F. SPECIFIED ROOF LIVE LOAD

ALLOWABLE DEFL.(LL)= L/360 (1.06")
CALCULATED VERT. DEFL.(LL) = L/ 999 (0.11")
ALLOWABLE DEFL..(TL)= L/360 (1.06")
CALCULATED VERT. DEFL.(TL) = L/ 999 (0.18")

CSI: TC=0.66/1.00 (D-E:1) , BC=0.44/1.00 (O-Q:1) , WB=0.99/1.00 (E-Q:1) , SSI=0.33/1.00 (D-E:1)

DOL LUMBER=1.00 NAIL=1.00 LS BEND=1.10 COMP=1.10 SHEAR=1.10 TENS= 1.10

COMPANION LIVE LOAD FACTOR = 1.00

AUTOSOLVE HEELS OFF

TRUSS PLATE MANUFACTURER IS NOT RESPONSIBLE FOR QUALITY CONTROL IN THE TRUSS MANUFACTURING PLANT .

NAIL VALUES

PLATE	GRIP(DRY) (PSI) MAX	MIN	SHEAR (PLI) MAX	MIN	SECTION (PLI) MAX	MIN
MT20	650	371	1747	788	1987	1873

PLATE PLACEMENT TOL. = 0.250 inches

PLATE ROTATION TOL. = 5.0 Deg.

JSI GRIP= 0.90 (S) (INPUT = 0.90)
JSI METAL= 0.74 (P) (INPUT = 1.00)

JOB NAME	TRUSS NAME	QUANTITY	PLY	JOB DESC.	DRWG NO.
418651	T22	4	1	BAYVIEW WELLINGTON TRUSS DESC.	

Tamarack Roof Truss, Burlington

Version 8.630 S Aug 30 2023 MiTek Industries, Inc. Tue Nov 14 12:09:24 2023 Page 1
ID:UaoF4umx8QMX1bo7Q0Zq7Cya5EO-valNnDI5EZor7R0T3fhY?S99E0yalonO5yt 9syJHcv

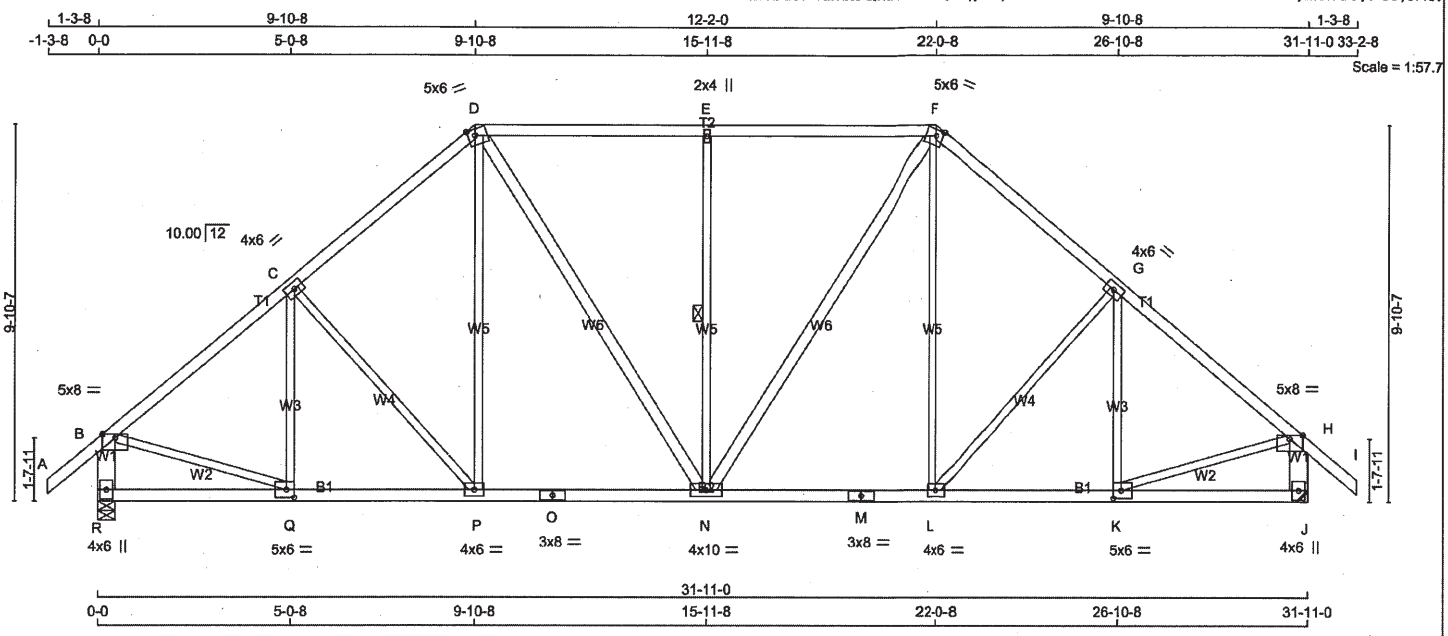

TOTAL WEIGHT = 4 X 164 = 657 lb

LUMBER

N. L. G. A. RULES

CHORDS	SIZE		LUMBER	DESCR.
A - D	2x4	DRY	No.2	SPF
D - F	2x4	DRY	No.2	SPF
F - I	2x4	DRY	No.2	SPF
R - B	2x6	DRY	No.2	SPF
J - H	2x6	DRY	No.2	SPF
R - O	2x4	DRY	No.2	SPF
O - M	2x4	DRY	No.2	SPF
M - J	2x4	DRY	No.2	SPF
ALL WEBS	2x3	DRY	No.2	SPF
EXCEPT				
D - N	2x4	DRY	No.2	SPF
N - F	2x4	DRY	No.2	SPF

DRY: SEASONED LUMBER.

PLATES (table is in inches)

JT	TYPE	PLATES	W	LEN	Y	X
B	TMVW-p	MT20	5.0	8.0	Edge	
C	TMWW-t	MT20	4.0	6.0		
D	TTWW-m	MT20	5.0	6.0	2.00	2.25
E	TMW+w	MT20	2.0	4.0		
F	TTWW-m	MT20	5.0	6.0	2.00	2.25
G	TMWW-t	MT20	4.0	6.0		
H	TMVW-p	MT20	5.0	8.0	Edge	
J	BMV1+p	MT20	4.0	6.0		
K	BMWW-t	MT20	5.0	6.0	2.50	2.50
L	BMWW-t	MT20	4.0	6.0		
M	BS-t	MT20	3.0	8.0		
N	BMWWW-t	MT20	4.0	10.0		
O	BS-t	MT20	3.0	8.0		
P	BMWW-t	MT20	4.0	6.0		
Q	BMWW-t	MT20	5.0	6.0	2.50	2.50
R	BMV1+p	MT20	4.0	6.0		

Edge - INDICATES REFERENCE CORNER OF PLATE TOUCHES EDGE OF CHORD.

NOTES-

1) Lateral braces to be a minimum of 2X4 SPF #2.

LICENSED PROFESSIONAL ENGINEER
11/14/23
C. M. HEYENS
100505065
PROVINCE OF ONTARIO

STRUCTURAL COMPONENT ONLY
DWG # TR23111112

DIMENSIONS, SUPPORTS AND LOADINGS SPECIFIED BY FABRICATOR TO BE VERIFIED BY BUILDING DESIGNER

BEARINGS

JT	FACTORED GROSS REACTION VERT	HORZ	MAXIMUM GROSS REACTION DOWN	HORZ	FACTORED UPLIFT	INPUT BRG IN-SX	REQRD BRG IN-SX
R	2545	0	2545	0	0	5-8	2-12
J	2545	0	2545	0	0	MECHANICAL	

A SUITABLE HANGER/MECHANICAL CONNECTION IS REQUIRED AT JOINT J. MINIMUM BEARING LENGTH AT JOINT J = 2-12.

UNFACTORED REACTIONS

JT	1ST LCASE COMBINED	MAX./MIN. COMPONENT REACTIONS SNOW	LIVE	PERM.LIVE	WIND	DEAD	SOIL
R	1771	1326 / 0	0 / 0	0 / 0	0 / 0	444 / 0	0 / 0
J	1771	1326 / 0	0 / 0	0 / 0	0 / 0	444 / 0	0 / 0

BEARING MATERIAL TO BE SPF NO.2 OR BETTER AT JOINT(S) R

BRACING

TOP CHORD TO BE SHEATHED OR MAX. PURLIN SPACING = 3.85 FT.
MAX. UNBRACED BOTTOM CHORD LENGTH = 10.00 FT OR RIGID CEILING DIRECTLY APPLIED.

ALL PITCH BREAKS AND PERIMETER CORNER JOINTS MUST BE LATERALLY RESTRAINED.

1 LATERAL BRACE(S) AT 1/ 2 LENGTH OF E-N.

END VERTICAL(S) MUST BE SHEATHED OR HAVE BRACES AS INDICATED IN THE MAX. UNBRACED LENGTH COLUMN OF THE TABLE BELOW

LOADING

TOTAL LOAD CASES: (4)

CHORDS

MEMB. FR-TO	MAX. FACTORED FORCE (LBS)	FACTORED VERT. LOAD LC1 (PLF) FROM	TO	MAX CSI (LC)	MAX. UNBRAC LENGTH
A- B	0 / 58	-129.7	-129.7	0.18 (1)	10.00
B- C	-2422 / 0	-129.7	-129.7	0.52 (1)	3.91
C- D	-2255 / 0	-129.7	-129.7	0.49 (1)	4.06
D- E	-2037 / 0	-129.7	-129.7	0.68 (1)	3.85
E- F	-2037 / 0	-129.7	-129.7	0.68 (1)	3.85
F- G	-2255 / 0	-129.7	-129.7	0.49 (1)	4.06
G- H	-2422 / 0	-129.7	-129.7	0.52 (1)	3.91
H- I	0 / 58	-129.7	-129.7	0.18 (1)	10.00
R- B	-2504 / 0	0.0	0.0	0.17 (1)	6.55
J- H	-2504 / 0	0.0	0.0	0.17 (1)	6.55
R- Q	0 / 0	-18.5	-18.5	0.10 (4)	10.00
Q- P	0 / 1898	-18.5	-18.5	0.36 (1)	10.00
P- O	0 / 1693	-18.5	-18.5	0.35 (1)	10.00
O- N	0 / 1693	-18.5	-18.5	0.35 (1)	10.00
N- M	0 / 1693	-18.5	-18.5	0.35 (1)	10.00
M- L	0 / 1693	-18.5	-18.5	0.35 (1)	10.00
L- K	0 / 1898	-18.5	-18.5	0.36 (1)	10.00
K- J	0 / 0	-18.5	-18.5	0.10 (4)	10.00

WEBS

MEMB. FR-TO	MAX. FACTORED FORCE (LBS)	MAX CSI (LC)
Q- C	-396 / 0	0.21 (1)
C- P	-312 / 0	0.34 (1)
P- D	0 / 335	0.08 (1)
D- N	0 / 640	0.10 (1)
N- E	-966 / 0	0.64 (1)
N- F	0 / 640	0.10 (1)
L- F	0 / 335	0.08 (1)
L- G	-312 / 0	0.34 (1)
K- G	-396 / 0	0.21 (1)
B- Q	0 / 1960	0.44 (1)
K- H	0 / 1960	0.44 (1)

DESIGN CRITERIA

SPECIFIED LOADS:

TOP CH.	LL	=	38.3	PSF
	DL	=	6.0	PSF
BOT CH.	LL	=	0.0	PSF
	DL	=	7.4	PSF
TOTAL LOAD		=	51.6	PSF

SPACING = 24.0 IN. C/C

LOADING IN FLAT SECTION BASED ON A SLOPE OF 6.00/12

THIS TRUSS IS DESIGNED FOR RESIDENTIAL OR SMALL BUILDING REQUIREMENTS OF PART 9, NBCC 2015

THIS DESIGN COMPLIES WITH:
- PART 9 OF BCBC 2018 , NBC-2019AE
- PART 9 OF OBC 2012 (2019 AMENDMENT)
- CSA 086-14
- TPIC 2014

(55 % OF 54.4 P.S.F. G.S.L. PLUS 8.4 P.S.F. RAIN LOAD) EQUALS 38.3 P.S.F. SPECIFIED ROOF LIVE LOAD

ALLOWABLE DEFL.(LL)= L/360 (1.06")
CALCULATED VERT. DEFL.(LL) = L/ 999 (0.09")
ALLOWABLE DEFL.(TL)= L/360 (1.06")
CALCULATED VERT. DEFL.(TL) = L/ 999 (0.16")

CSI: TC=0.68/1.00 (D-E:1) , BC=0.36/1.00 (P-Q:1) , WB=0.64/1.00 (E-N:1) , SSI=0.38/1.00 (D-E:1)

DOL LUMBER=1.00 NAIL=1.00 LS BEND=1.10 COMP=1.10 SHEAR=1.10 TENS= 1.10

COMPANION LIVE LOAD FACTOR = 1.00

AUTOSOLVE HEELS OFF

TRUSS PLATE MANUFACTURER IS NOT RESPONSIBLE FOR QUALITY CONTROL IN THE TRUSS MANUFACTURING PLANT .

NAIL VALUES

PLATE	GRIP(DRY) (PSI) MAX	MIN	SHEAR (PLI) MAX	MIN	SECTION (PLI) MAX	MIN
MT20	650	371	1747	788	1987	1873

PLATE PLACEMENT TOL. = 0.250 inches

PLATE ROTATION TOL. = 5.0 Deg.

JSI GRIP= 0.85 (Q) (INPUT = 0.90)
JSI METAL= 0.54 (O) (INPUT = 1.00)

JOB NAME	TRUSS NAME	QUANTITY	PLY	JOB DESC.	DRWG NO.
418651	T23	1	1	BAYVIEW WELLINGTON TRUSS DESC.	

Tamarack Roof Truss, Burlington

Version 8.630 S Aug 30 2023 MiTek Industries, Inc. Tue Nov 14 12:09:26 2023 Page 1
ID:UaoF4umx8QMX1bo7Q0Zg7Cya5EO-rzt7CuJLmB2ZNlAsB4k04tEcbpfrmjahYGM5DkyJHct

Scale = 1:41.7

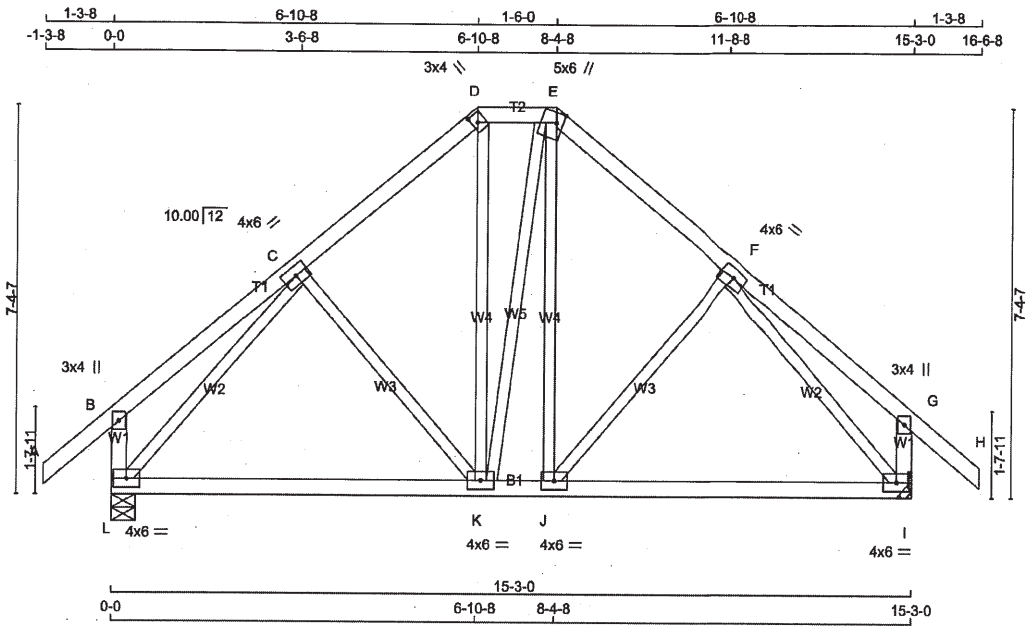

TOTAL WEIGHT = 80 lb

[M][F]

LUMBER

N. L. G. A. RULES

CHORDS	SIZE		LUMBER	DESCR.
A - D	2x4	DRY	No.2	SPF
D - E	2x4	DRY	No.2	SPF
E - H	2x4	DRY	No.2	SPF
L - B	2x4	DRY	No.2	SPF
I - G	2x4	DRY	No.2	SPF
L - I	2x4	DRY	No.2	SPF
ALL WEBS EXCEPT	2x3	DRY	No.2	SPF

DRY: SEASONED LUMBER.

PLATES (table is in inches)

JT	TYPE	PLATES	W	LEN	Y	X
B	TMV+p	MT20	3.0	4.0		
C	TMWW-t	MT20	4.0	6.0		
D	TTW+h	MT20	3.0	4.0	2.00	1.25
E	TTWW+m	MT20	5.0	6.0	2.25	1.50
F	TMWW-t	MT20	4.0	6.0		
G	TMV+p	MT20	3.0	4.0		
I	BMVW1-t	MT20	4.0	6.0		
J	BMWW-t	MT20	4.0	6.0		
K	BMWWW-t	MT20	4.0	6.0		
L	BMVW1-t	MT20	4.0	6.0		

NOTES-
1) Lateral braces to be a minimum of 2X4 SPF #2.

DIMENSIONS, SUPPORTS AND LOADINGS SPECIFIED BY FABRICATOR TO BE VERIFIED BY BUILDING DESIGNER

BEARINGS

JT	FACTORED GROSS REACTION VERT	HORZ	MAXIMUM FACTORED GROSS REACTION DOWN	HORZ	UPLIFT	INPUT BRG IN-SX	REQRD BRG IN-SX
L	1310	0	1310	0	0	5-8	1-8
I	1310	0	1310	0	0	MECHANICAL	

A SUITABLE HANGER/MECHANICAL CONNECTION IS REQUIRED AT JOINT I. MINIMUM BEARING LENGTH AT JOINT I = 1-8.

UNFACTORED REACTIONS

JT	1ST LCASE COMBINED	MAX./MIN. COMPONENT REACTIONS SNOW	LIVE	PERM.LIVE	WIND	DEAD	SOIL
L	910	689 / 0	0 / 0	0 / 0	0 / 0	221 / 0	0 / 0
I	910	689 / 0	0 / 0	0 / 0	0 / 0	221 / 0	0 / 0

BEARING MATERIAL TO BE SPF NO.2 OR BETTER AT JOINT(S) L

BRACING

TOP CHORD TO BE SHEATHED OR MAX. PURLIN SPACING = 6.25 FT.
MAX. UNBRACED BOTTOM CHORD LENGTH = 10.00 FT OR RIGID CEILING DIRECTLY APPLIED.

ALL PITCH BREAKS AND PERIMETER CORNER JOINTS MUST BE LATERALLY RESTRAINED.

LOADING

TOTAL LOAD CASES: (4)

CHORDS

MEMB. FR-TO	MAX. FACTORED FORCE (LBS)	FACTORED VERT. LOAD LC1 (PLF) FROM	TO	MAX CSI (LC)	MAX. UNBRAC LENGTH
A- B	0 / 58	-129.7	-129.7	0.18 (1)	10.00
B- C	0 / 33	-129.7	-129.7	0.25 (1)	10.00
C- D	-834 / 0	-129.7	-129.7	0.19 (1)	6.25
D- E	-617 / 0	-129.7	-129.7	0.04 (1)	6.25
E- F	-832 / 0	-129.7	-129.7	0.19 (1)	6.25
F- G	0 / 33	-129.7	-129.7	0.25 (1)	10.00
G- H	0 / 58	-129.7	-129.7	0.18 (1)	10.00
L- B	-349 / 0	0.0	0.0	0.04 (1)	7.81
I- G	-349 / 0	0.0	0.0	0.04 (1)	7.81
L- K	0 / 747	-18.5	-18.5	0.25 (4)	10.00
K- J	0 / 616	-18.5	-18.5	0.25 (4)	10.00
J- I	0 / 746	-18.5	-18.5	0.24 (4)	10.00

WEBS

MEMB. FR-TO	MAX. FACTORED FORCE (LBS)	MAX CSI (LC)
C- K	-205 / 0	0.10 (1)
K- D	0 / 244	0.05 (1)
K- E	0 / 8	0.00 (1)
J- E	0 / 235	0.05 (1)
J- F	-205 / 0	0.10 (1)
L- C	-1176 / 0	0.55 (1)
F- I	-1174 / 0	0.55 (1)

DESIGN CRITERIA

SPECIFIED LOADS:

TOP CH.	LL	=	38.3	PSF
	DL	=	6.0	PSF
BOT CH.	LL	=	0.0	PSF
	DL	=	7.4	PSF
TOTAL LOAD		=	51.6	PSF

SPACING = 24.0 IN. C/C

LOADING IN FLAT SECTION BASED ON A SLOPE OF 6.00/12

THIS TRUSS IS DESIGNED FOR RESIDENTIAL OR SMALL BUILDING REQUIREMENTS OF PART 9, NBCC 2015

THIS DESIGN COMPLIES WITH:
- PART 9 OF BCBC 2018 , NBC-2019AE
- PART 9 OF OBC 2012 (2019 AMENDMENT)
- CSA 086-14
- TPIC 2014

(55 % OF 54.4 P.S.F. G.S.L. PLUS 8.4 P.S.F. RAIN LOAD) EQUALS 38.3 P.S.F. SPECIFIED ROOF LIVE LOAD

ALLOWABLE DEFL.(LL)= L/360 (0.51")
CALCULATED VERT. DEFL.(LL) = L/ 999 (0.02")
ALLOWABLE DEFL.(TL)= L/360 (0.51")
CALCULATED VERT. DEFL.(TL) = L/ 999 (0.08")

CSI: TC=0.25/1.00 (F-G:1) , BC=0.25/1.00 (K-L:4) , WB=0.55/1.00 (C-L:1) , SSI=0.16/1.00 (E-F:1)

DOL LUMBER=1.00 NAIL=1.00 LS BEND=1.10 COMP=1.10 SHEAR=1.10 TENS= 1.10

COMPANION LIVE LOAD FACTOR = 1.00

TRUSS PLATE MANUFACTURER IS NOT RESPONSIBLE FOR QUALITY CONTROL IN THE TRUSS MANUFACTURING PLANT .

NAIL VALUES

PLATE	GRIP(DRY) (PSI) MAX	MIN	SHEAR (PLI) MAX	MIN	SECTION (PLI) MAX	MIN
MT20	650	371	1747	788	1987	1873

PLATE PLACEMENT TOL. = 0.250 inches

PLATE ROTATION TOL. = 5.0 Deg.

JSI GRIP= 0.74 (C) (INPUT = 0.90)
JSI METAL= 0.26 (C) (INPUT = 1.00)

LICENSED PROFESSIONAL ENGINEER
11/14/23
C. M. HEYENS
100505065
PROVINCE OF ONTARIO

STRUCTURAL COMPONENT ONLY
DWG # TR23111113

JOB NAME	TRUSS NAME	QUANTITY	PLY	JOB DESC.	DRWG NO.
418651	T24	1	1	BAYVIEW WELLINGTON TRUSS DESC.	

Tamarack Roof Truss, Burlington

Version 8.630 S Aug 30 2023 MiTek Industries, Inc. Tue Nov 14 12:09:27 2023 Page 1
ID:UaoF4umx8QMX1bo7Q0Zq7Cya5EO-J9RWPEKzXUAQ vl2InFFd5nmPDzUV80qnw6flByJHcs

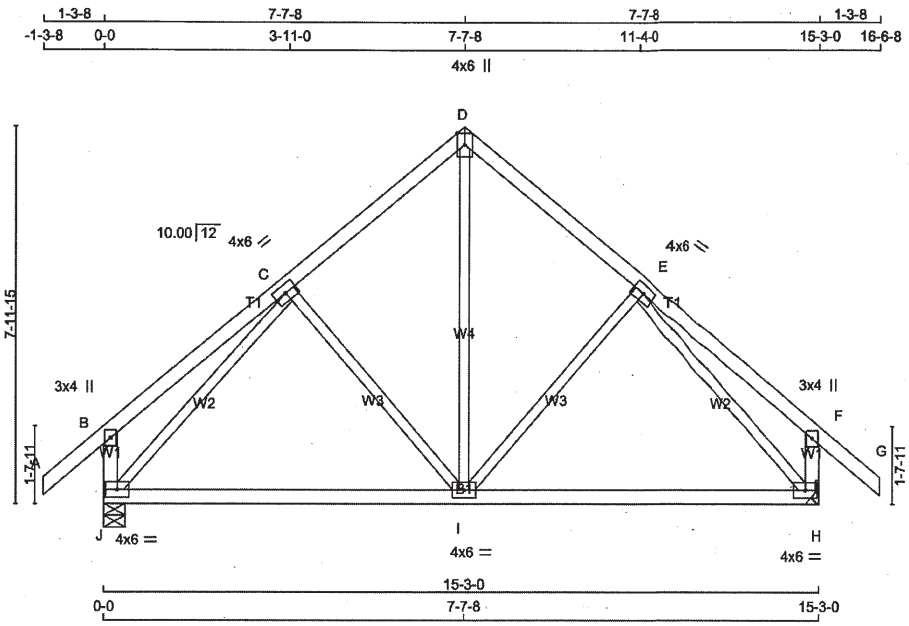

TOTAL WEIGHT = 71 lb

LUMBER

N. L. G. A. RULES

CHORDS	SIZE		LUMBER	DESCR.
A - D	2x4	DRY	No.2	SPF
D - G	2x4	DRY	No.2	SPF
J - B	2x4	DRY	No.2	SPF
H - F	2x4	DRY	No.2	SPF
J - H	2x4	DRY	No.2	SPF
ALL WEBS EXCEPT	2x3	DRY	No.2	SPF

DRY: SEASONED LUMBER.

PLATES (table is in inches)

JT	TYPE	PLATES	W	LEN	Y	X
B	TMV+p	MT20	3.0	4.0		
C	TMWW-t	MT20	4.0	6.0		
D	TTW+p	MT20	4.0	6.0	Edge	
E	TMWW-t	MT20	4.0	6.0		
F	TMV+p	MT20	3.0	4.0		
H	BMVW1-t	MT20	4.0	6.0		
I	BMWWW-t	MT20	4.0	6.0		
J	BMVW1-t	MT20	4.0	6.0		

Edge - INDICATES REFERENCE CORNER OF PLATE TOUCHES EDGE OF CHORD.

NOTES-

1) Lateral braces to be a minimum of 2X4 SPF #2.

LICENSED PROFESSIONAL ENGINEER
11/14/23
C. M. HEYENS
100505065
PROVINCE OF ONTARIO

STRUCTURAL COMPONENT ONLY
DWG # TR23111114

DIMENSIONS, SUPPORTS AND LOADINGS SPECIFIED BY FABRICATOR TO BE VERIFIED BY BUILDING DESIGNER

BEARINGS

JT	FACTORED GROSS REACTION VERT	HORZ	MAXIMUM FACTORED GROSS REACTION DOWN	HORZ	UPLIFT	INPUT BRG IN-SX	REQRD BRG IN-SX
J	1310	0	1310	0	0	5-8	1-8
H	1310	0	1310	0	0	MECHANICAL	

A SUITABLE HANGER/MECHANICAL CONNECTION IS REQUIRED AT JOINT H. MINIMUM BEARING LENGTH AT JOINT H = 1-8.

UNFACTORED REACTIONS

JT	1ST LCASE COMBINED	MAX./MIN. COMPONENT REACTIONS SNOW	LIVE	PERM.LIVE	WIND	DEAD	SOIL
J	910	689 / 0	0 / 0	0 / 0	0 / 0	221 / 0	0 / 0
H	910	689 / 0	0 / 0	0 / 0	0 / 0	221 / 0	0 / 0

BEARING MATERIAL TO BE SPF NO.2 OR BETTER AT JOINT(S) J

BRACING

TOP CHORD TO BE SHEATHED OR MAX. PURLIN SPACING = 6.25 FT.
MAX. UNBRACED BOTTOM CHORD LENGTH = 10.00 FT OR RIGID CEILING DIRECTLY APPLIED.

ALL PITCH BREAKS AND PERIMETER CORNER JOINTS MUST BE LATERALLY RESTRAINED.

LOADING

TOTAL LOAD CASES: (4)

CHORDS

MEMB. FR-TO	MAX. FACTORED FORCE (LBS)	FACTORED VERT. LOAD (PLF) FROM	TO	LC1 MAX CSI (LC)	MAX UNBRAC LENGTH
A- B	0 / 58	-129.7	-129.7	0.18 (1)	10.00
B- C	0 / 37	-129.7	-129.7	0.30 (1)	10.00
C- D	-790 / 0	-129.7	-129.7	0.24 (1)	6.25
D- E	-790 / 0	-129.7	-129.7	0.24 (1)	6.25
E- F	0 / 37	-129.7	-129.7	0.30 (1)	10.00
F- G	0 / 58	-129.7	-129.7	0.18 (1)	10.00
J- B	-367 / 0	0.0	0.0	0.04 (1)	7.81
H- F	-367 / 0	0.0	0.0	0.04 (1)	7.81
J- I	0 / 754	-18.5	-18.5	0.35 (4)	10.00
I- H	0 / 754	-18.5	-18.5	0.35 (4)	10.00

WEBS

MEMB. FR-TO	MAX. FACTORED FORCE (LBS)	MAX CSI (LC)
I- D	0 / 581	0.13 (1)
I- E	-269 / 0	0.16 (1)
C- I	-269 / 0	0.16 (1)
J- C	-1165 / 0	0.67 (1)
E- H	-1165 / 0	0.67 (1)

[M][F]

DESIGN CRITERIA

SPECIFIED LOADS:

TOP CH.	LL	=	38.3	PSF
	DL	=	6.0	PSF
BOT CH.	LL	=	0.0	PSF
	DL	=	7.4	PSF
TOTAL LOAD		=	51.6	PSF

SPACING = 24.0 IN. C/C

THIS TRUSS IS DESIGNED FOR RESIDENTIAL OR SMALL BUILDING REQUIREMENTS OF PART 9, NBCC 2015

THIS DESIGN COMPLIES WITH:
- PART 9 OF BCBC 2018 , NBC-2019AE
- PART 9 OF OBC 2012 (2019 AMENDMENT)
- CSA 086-14
- TPIC 2014

(55 % OF 54.4 P.S.F. G.S.L. PLUS 8.4 P.S.F. RAIN LOAD) EQUALS 38.3 P.S.F. SPECIFIED ROOF LIVE LOAD

ALLOWABLE DEFL.(LL)= L/360 (0.51")
CALCULATED VERT. DEFL.(LL) = L/ 999 (0.02")
ALLOWABLE DEFL.(TL)= L/360 (0.51")
CALCULATED VERT. DEFL.(TL) = L/ 999 (0.09")

CSI: TC=0.30/1.00 (B-C:1) , BC=0.35/1.00 (H-I:4) , WB=0.67/1.00 (C-J:1) , SSI=0.18/1.00 (C-D:1)

DOL LUMBER=1.00 NAIL=1.00 LS BEND=1.10 COMP=1.10 SHEAR=1.10 TENS= 1.10

COMPANION LIVE LOAD FACTOR = 1.00

TRUSS PLATE MANUFACTURER IS NOT RESPONSIBLE FOR QUALITY CONTROL IN THE TRUSS MANUFACTURING PLANT .

NAIL VALUES

PLATE	GRIP(DRY) (PSI) MAX	MIN	SHEAR (PLI) MAX	MIN	SECTION (PLI) MAX	MIN
MT20	650	371	1747	788	1987	1873

PLATE PLACEMENT TOL. = 0.250 inches

PLATE ROTATION TOL. = 5.0 Deg.

JSI GRIP= 0.71 (E) (INPUT = 0.90)
JSI METAL= 0.26 (C) (INPUT = 1.00)

JOB NAME	TRUSS NAME	QUANTITY	PLY	JOB DESC.	DRWG NO.
418651	T25	1	2	BAYVIEW WELLINGTON TRUSS DESC.	

Tamarack Roof Truss, Burlington

Version 8.630 S Aug 30 2023 MiTek Industries, Inc. Tue Nov 14 12:09:29 2023 Page 1
ID:UaoF4umx8QMX1bo7Q0Zg7Cya5EO-FYZGqwME36Q8ECvQsCHjiWsyM1iWz8X7EEblq3yJHcq

Scale = 1:41.9

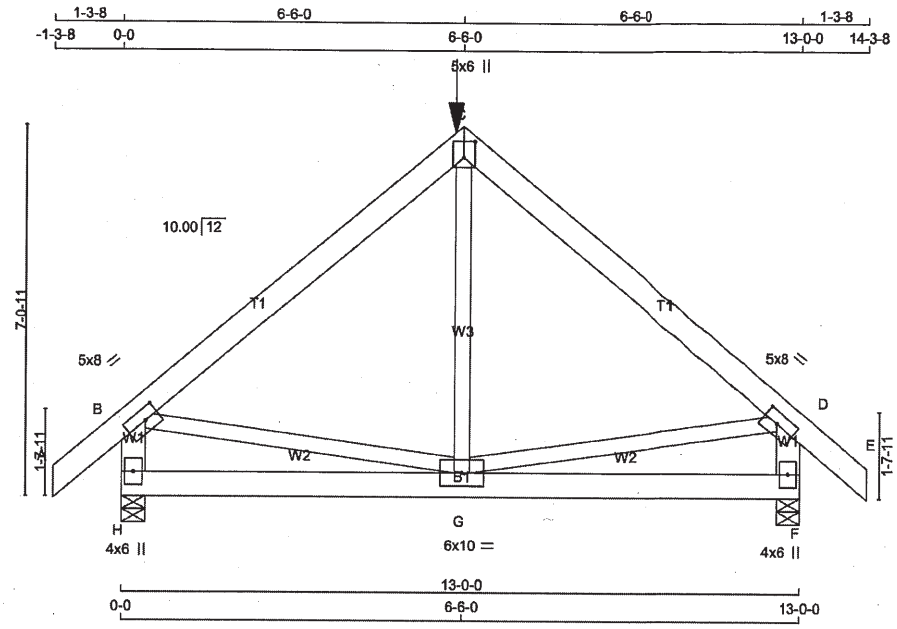

TOTAL WEIGHT = 2 X 85 = 170 lb

LUMBER

N. L. G. A. RULES

CHORDS	SIZE		LUMBER	DESCR.
A - C	2x6	DRY	No.2	SPF
C - E	2x6	DRY	No.2	SPF
H - B	2x6	DRY	No.2	SPF
F - D	2x6	DRY	No.2	SPF
H - F	2x6	DRY	No.2	SPF
ALL WEBS EXCEPT	2x4	DRY	No.2	SPF

DRY: SEASONED LUMBER.

DESIGN CONSISTS OF 2 TRUSSES BUILT SEPARATELY THEN FASTENED TOGETHER AS FOLLOWS:

CHORDS	#ROWS	SURFACE SPACING (IN)	LOAD(PLF)
TOP CHORDS : (0.122"X3") SPIRAL NAILS			
A- C	2	12	SIDE(82.6)
C- E	2	12	SIDE(56.1)
H- B	2	12	TOP
F- D	2	12	TOP
BOTTOM CHORDS : (0.122"X3") SPIRAL NAILS			
H- F	2	12	SIDE(11.7)
WEBS : (0.122"X3") SPIRAL NAILS			
G- C	1	6	SIDE(346.4)
2x4	1	6	

NAILS TO BE DRIVEN FROM ONE SIDE ONLY.

GIRDER NAILING ASSUMES NAILED HANGERS ARE FASTENED WITH MIN. 3-0 INCH NAILS.

TOP - COMPONENTS ARE LOADED FROM THE TOP AND MUST BE PLACED ON TOP EDGE OF ALL PLIES FOR THE LOAD TO BE TRANSFERRED TO EACH PLY.

SIDE - PLF SHOWN IS THE EQUIVALENT UDL APPLIED TO ONE SIDE THAT THE CORRESPONDING NAILING PATTERN SHALL BE CAPABLE OF TRANSFERING. REMAINING PLF MUST BE APPLIED ON THE OPPOSITE SIDE OR ON THE TOP.

LICENSED PROFESSIONAL ENGINEER
11/14/23
C. M. HEYENS
100505065
PROVINCE OF ONTARIO

STRUCTURAL COMPONENT ONLY
DWG # TR23111115

DIMENSIONS, SUPPORTS AND LOADINGS SPECIFIED BY FABRICATOR TO BE VERIFIED BY BUILDING DESIGNER

BEARINGS

JT	FACTORED GROSS REACTION VERT	HORZ	MAXIMUM FACTORED GROSS REACTION DOWN	HORZ	UPLIFT	INPUT BRG IN-SX	REQRD BRG IN-SX
H	4878	0	4878	0	0	5-8	2-10
F	4878	0	4878	0	0	5-7	2-10

UNFACTORED REACTIONS

MAX./MIN. COMPONENT REACTIONS

JT	1ST LCASE COMBINED	SNOW	LIVE	PERM.LIVE	WIND	DEAD	SOIL
H	3373	2646 / 0	0 / 0	0 / 0	0 / 0	727 / 0	0 / 0
F	3373	2646 / 0	0 / 0	0 / 0	0 / 0	727 / 0	0 / 0

BEARING MATERIAL TO BE SPF NO.2 OR BETTER AT JOINT(S) H, F

BRACING

TOP CHORD TO BE SHEATHED OR MAX. PURLIN SPACING = 3.82 FT.
MAX. UNBRACED BOTTOM CHORD LENGTH = 10.00 FT OR RIGID CEILING DIRECTLY APPLIED.

ALL PITCH BREAKS AND PERIMETER CORNER JOINTS MUST BE LATERALLY RESTRAINED.

LOADING

TOTAL LOAD CASES: (4)

CHORDS

MEMB. FR-TO	MAX. FACTORED FORCE (LBS)	FACTORED VERT. LOAD (PLF) FROM	TO	LC1	MAX CSI (LC)	MAX. UNBRAC LENGTH
A- B	0 / 60	-129.7	-129.7	0.05 (1)	10.00	
B- C	-4094 / 0	-421.6	-421.6	0.92 (1)	3.82	
C- D	-4094 / 0	-421.6	-421.6	0.92 (1)	3.82	
D- E	0 / 60	-129.7	-129.7	0.05 (1)	10.00	
H- B	-4716 / 0	0.0	0.0	0.17 (1)	6.66	
F- D	-4716 / 0	0.0	0.0	0.17 (1)	6.66	
H- G	0 / 0	-60.1	-60.1	0.19 (4)	10.00	
G- F	0 / 0	-60.1	-60.1	0.19 (4)	10.00	

WEBS

MEMB. FR-TO	MAX. FACTORED FORCE (LBS)	MAX CSI (LC)
G- C	-619 / 318	0.16 (1)
G- B	0 / 3191	0.28 (1)
G- D	0 / 3191	0.28 (1)

SPECIFIED CONCENTRATED LOADS (LBS)

JT	LOC.	LC1	MAX-	MAX+	FACE	DIR.	TYPE	HEEL	CONN.
C	6-6-0	-144	-144	---	FRONT	VERT	DEAD	---	C1
C	6-6-0	-144	-144	---	BACK	VERT	DEAD	---	C1
C	6-6-0	-920	-920	---	FRONT	VERT	SNOW	---	C1
C	6-6-0	-920	-920	---	BACK	VERT	SNOW	---	C1

CONNECTION REQUIREMENTS

1) **C1:** A SUITABLE HANGER/MECHANICAL CONNECTION IS REQUIRED.

DESIGN CRITERIA

*** SPECIAL LOADS ANALYSIS ***
GEOMETRY AND/OR BASIC LOADS CHANGED BY USER.
LOADS WERE DERIVED FROM USER INPUT
NO FURTHER MODIFICATIONS WERE MADE

SPECIFIED LOADS:

TOP CH.	LL	=	38.3	PSF
	DL	=	6.0	PSF
BOT CH.	LL	=	0.0	PSF
	DL	=	7.4	PSF
TOTAL LOAD		=	51.6	PSF

SPACING = 24.0 IN. C/C

GIRDER TYPE: CPrimeHip
SIDE SETBACK = 0-0
END SETBACK = 6-6-0
END WALL WIDTH = 0-0
CORNER FRAMING TYPE: CONVENTIONAL
END JACK TYPE: CONVENTIONAL
APPLIED TO FRONT SIDE
- ADDT'L LOADS BASED ON 55 % OF GSL.

GIRDER TYPE: CPrimeHip
SIDE SETBACK = 0-0
END SETBACK = 6-6-0
END WALL WIDTH = 0-0
CORNER FRAMING TYPE: CONVENTIONAL
END JACK TYPE: CONVENTIONAL
APPLIED TO BACK SIDE
- ADDT'L LOADS BASED ON 55 % OF GSL.

*** NON STANDARD GIRDER ***
ADDT'L USER-DEFINED LOADS APPLIED TO ALL LOAD CASES.

THIS TRUSS IS DESIGNED FOR RESIDENTIAL OR SMALL BUILDING REQUIREMENTS OF PART 9, NBCC 2015

THIS DESIGN COMPLIES WITH:
- PART 9 OF BCBC 2018 , NBC-2019AE
- PART 9 OF OBC 2012 (2019 AMENDMENT)
- CSA 086-14
- TPIC 2014

(55 % OF 54.4 P.S.F. G.S.L. PLUS 8.4 P.S.F. RAIN LOAD) EQUALS 38.3 P.S.F. SPECIFIED ROOF LIVE LOAD

ALLOWABLE DEFL.(LL)= L/360 (0.43")
CALCULATED VERT. DEFL.(LL) = L/ 999 (0.02")
ALLOWABLE DEFL.(TL)= L/360 (0.43")
CALCULATED VERT. DEFL.(TL) = L/ 999 (0.04")

CSI: TC=0.92/1.00 (C-D:1) , BC=0.19/1.00 (G-H:4) , WB=0.28/1.00 (B-G:1) , SSI=0.35/1.00 (C-D:1)

DOL LUMBER=1.00 NAIL=1.00 LS BEND=1.00 COMP=1.00 SHEAR=1.00 TENS= 1.00

COMPANION LIVE LOAD FACTOR = 1.00

AUTOSOLVE HEELS OFF

TRUSS PLATE MANUFACTURER IS NOT RESPONSIBLE FOR QUALITY CONTROL IN THE TRUSS MANUFACTURING PLANT .

CONTINUED ON PAGE 2

JOB NAME	TRUSS NAME	QUANTITY	PLY	JOB DESC.	DRWG NO.
418651	T25	1	2	BAYVIEW WELLINGTON TRUSS DESC.	

PLATES (table is in inches)

JT	TYPE	PLATES	W	LEN	Y	X
B	TMVW-t	MT20	5.0	8.0	2.50	3.25
C	TTW+p	MT20	5.0	6.0	3.75	2.50
D	TMVW-t	MT20	5.0	8.0	2.50	3.25
F	BMV1+p	MT20	4.0	6.0		
G	BMWWW-t	MT20	6.0	10.0		
H	BMV1+p	MT20	4.0	6.0		

NOTES-

1) Lateral braces to be a minimum of 2X4 SPF #2.

NAIL VALUES

PLATE	GRIP(DRY) (PSI)		SHEAR (PLI)		SECTION (PLI)	
	MAX	MIN	MAX	MIN	MAX	MIN
MT20	650	371	1747	788	1987	1873

PLATE PLACEMENT TOL. = 0.250 inches

PLATE ROTATION TOL. = 5.0 Deg.

JSI GRIP= 0.60 (D) (INPUT = 0.90)
JSI METAL= 0.45 (D) (INPUT = 1.00)

LICENSED PROFESSIONAL ENGINEER
11/14/23
C. M. HEYENS
100505065
PROVINCE OF ONTARIO

STRUCTURAL COMPONENT ONLY
DWG # TR23111115

JOB NAME	TRUSS NAME	QUANTITY	PLY	JOB DESC.	DRWG NO.
418651	T26	1	2	BAYVIEW WELLINGTON TRUSS DESC.	

Tamarack Roof Truss, Burlington

Version 8.630 S Aug 30 2023 MiTek Industries, Inc. Tue Nov 14 12:09:30 2023 Page 1
ID:UaoF4umx8QMX1bo7Q0Zq7Cya5EO-jk7e1GNspPY?rMTdQvoyFjPExQzTiY6GTuKJMVyJHcp

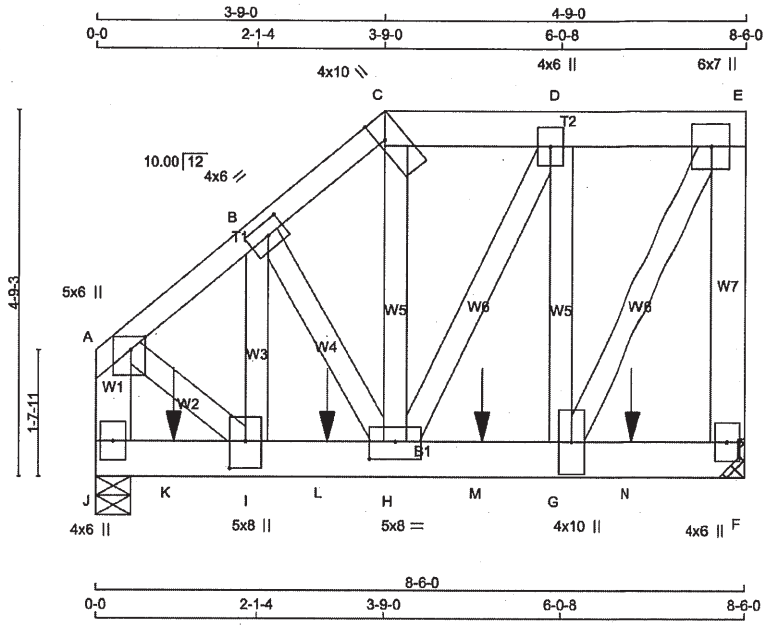

Scale = 1:28.6

TOTAL WEIGHT = 2 X 66 = 132 lb [M]

LUMBER

N. L. G. A. RULES

CHORDS	SIZE		LUMBER	DESCR.
A - C	2x4	DRY	No.2	SPF
C - E	2x6	DRY	No.2	SPF
F - E	2x6	DRY	No.2	SPF
J - A	2x6	DRY	No.2	SPF
J - F	2x6	DRY	No.2	SPF
ALL WEBS EXCEPT	2x4	DRY	No.2	SPF

DRY: SEASONED LUMBER.

DESIGN CONSISTS OF 2 TRUSSES BUILT SEPARATELY THEN FASTENED TOGETHER AS FOLLOWS:

CHORDS #ROWS	SURFACE SPACING (IN)	LOAD(PLF)
TOP CHORDS : (0.122"X3") SPIRAL NAILS		
A- C 1	12	TOP
C- E 2	12	TOP
E- F 2	12	TOP
J- A 2	12	TOP
BOTTOM CHORDS : (0.122"X3") SPIRAL NAILS		
J- F 2	12	SIDE(0.0)
WEBS : (0.122"X3") SPIRAL NAILS		
2x4 1	6	

NAILS TO BE DRIVEN FROM ONE SIDE ONLY.

GIRDER NAILING ASSUMES NAILED HANGERS ARE FASTENED WITH MIN. 3-0 INCH NAILS.

TOP - COMPONENTS ARE LOADED FROM THE TOP AND MUST BE PLACED ON TOP EDGE OF ALL PLIES FOR THE LOAD TO BE TRANSFERRED TO EACH PLY.

SIDE - PLF SHOWN IS THE EQUIVALENT UDL APPLIED TO ONE SIDE THAT THE CORRESPONDING NAILING PATTERN SHALL BE CAPABLE OF TRANSFERING. REMAINING PLF MUST BE APPLIED ON THE OPPOSITE SIDE OR ON THE TOP.

PLATES (table is in inches)

JT	TYPE	PLATES	W	LEN	Y	X
A	TMVW+p	MT20	5.0	6.0	2.00	2.25

LICENSED PROFESSIONAL ENGINEER
11/14/23
C. M. HEYENS
100505065
PROVINCE OF ONTARIO

STRUCTURAL COMPONENT ONLY
DWG # TR23111116

DIMENSIONS, SUPPORTS AND LOADINGS SPECIFIED BY FABRICATOR TO BE VERIFIED BY BUILDING DESIGNER

BEARINGS

JT	FACTORED GROSS REACTION VERT	HORZ	MAXIMUM FACTORED GROSS REACTION DOWN	HORZ	UPLIFT	INPUT BRG IN-SX	REQRD BRG IN-SX
F	5410	0	5410	0	0	MECHANICAL	
J	5955	0	5955	0	0	5-8	4-3

A SUITABLE HANGER/MECHANICAL CONNECTION IS REQUIRED AT JOINT F. MINIMUM BEARING LENGTH AT JOINT F = 3-5.

UNFACTORED REACTIONS

JT	1ST LCASE COMBINED	MAX./MIN. COMPONENT REACTIONS SNOW	LIVE	PERM.LIVE	WIND	DEAD	SOIL
F	3761	2835 / 0	0 / 0	0 / 0	0 / 0	927 / 0	0 / 0
J	4140	3121 / 0	0 / 0	0 / 0	0 / 0	1019 / 0	0 / 0

BEARING MATERIAL TO BE SPF NO.2 OR BETTER AT JOINT(S) J

BRACING

TOP CHORD TO BE SHEATHED OR MAX. PURLIN SPACING = 4.49 FT.
MAX. UNBRACED BOTTOM CHORD LENGTH = 10.00 FT OR RIGID CEILING DIRECTLY APPLIED.

ALL PITCH BREAKS AND PERIMETER CORNER JOINTS MUST BE LATERALLY RESTRAINED.

LOADING

TOTAL LOAD CASES: (4)

CHORDS

MEMB. FR-TO	MAX. FACTORED FORCE (LBS)	FACTORED VERT. LOAD (PLF) FROM	TO	LC1 MAX CSI (LC)	MAX. UNBRAC LENGTH
A- B	-4354 / 0	-129.7	-129.7	0.12 (1)	4.49
B- C	-3804 / 0	-129.7	-129.7	0.08 (1)	4.79
C- D	-3012 / 0	-129.7	-129.7	0.09 (1)	6.23
D- E	-2541 / 0	-129.7	-129.7	0.09 (1)	6.25
F- E	-4694 / 0	0.0	0.0	0.48 (1)	6.67
J- A	-4867 / 0	0.0	0.0	0.18 (1)	6.58
J- K	0 / 0	-18.5	-18.5	0.40 (1)	10.00
K- I	0 / 0	-18.5	-18.5	0.40 (1)	10.00
I- L	0 / 3342	-18.5	-18.5	0.46 (1)	10.00
L- H	0 / 3342	-18.5	-18.5	0.46 (1)	10.00
H- M	0 / 2541	-18.5	-18.5	0.45 (1)	10.00
M- G	0 / 2541	-18.5	-18.5	0.45 (1)	10.00
G- N	0 / 0	-18.5	-18.5	0.38 (1)	10.00
N- F	0 / 0	-18.5	-18.5	0.38 (1)	10.00

WEBS

MEMB. FR-TO	MAX. FACTORED FORCE (LBS)	MAX CSI (LC)
H- C	0 / 2092	0.18 (1)
H- D	0 / 1059	0.09 (1)
G- D	-1109 / 0	0.12 (1)
G- E	0 / 5125	0.45 (1)
B- H	-775 / 0	0.06 (1)
I- B	0 / 801	0.07 (1)
A- I	0 / 3865	0.34 (1)

SPECIFIED CONCENTRATED LOADS (LBS)

JT	LOC.	LC1	MAX-	MAX+	FACE	DIR.	TYPE	HEEL	CONN.
K	1-0-4	-1756	-1756	---	FRONT	VERT	TOTAL	--	C1
L	3-0-4	-1756	-1756	---	FRONT	VERT	TOTAL	--	C1
M	5-0-4	-1756	-1756	---	FRONT	VERT	TOTAL	--	C1
N	7-0-4	-1756	-1756	---	FRONT	VERT	TOTAL	--	C1

CONNECTION REQUIREMENTS

1) **C1:** A SUITABLE HANGER/MECHANICAL CONNECTION IS REQUIRED.

DESIGN CRITERIA

SPECIFIED LOADS:

TOP CH.	LL	=	38.3	PSF
	DL	=	6.0	PSF
BOT CH.	LL	=	0.0	PSF
	DL	=	7.4	PSF
TOTAL LOAD		=	51.6	PSF

SPACING = 24.0 IN. C/C

LOADING IN FLAT SECTION BASED ON A SLOPE OF 6.00/12

THIS TRUSS IS DESIGNED FOR RESIDENTIAL OR SMALL BUILDING REQUIREMENTS OF PART 9, NBCC 2015

THIS DESIGN COMPLIES WITH:
- PART 9 OF BCBC 2018 , NBC-2019AE
- PART 9 OF OBC 2012 (2019 AMENDMENT)
- CSA 086-14
- TPIC 2014

(55 % OF 54.4 P.S.F. G.S.L. PLUS 8.4 P.S.F. RAIN LOAD) EQUALS 38.3 P.S.F. SPECIFIED ROOF LIVE LOAD

ALLOWABLE DEFL.(LL)= L/360 (0.28")
CALCULATED VERT. DEFL.(LL) = L/ 999 (0.02")
ALLOWABLE DEFL.(TL)= L/360 (0.28")
CALCULATED VERT. DEFL.(TL) = L/ 999 (0.04")

CSI: TC=0.48/1.00 (E-F:1) , BC=0.46/1.00 (H-I:1) , WB=0.45/1.00 (E-G:1) , SSI=0.62/1.00 (F-G:1)

DOL LUMBER=1.00 NAIL=1.00 LS BEND=1.00 COMP=1.00 SHEAR=1.00 TENS= 1.00

COMPANION LIVE LOAD FACTOR = 1.00

AUTOSOLVE RIGHT HEEL ONLY

TRUSS PLATE MANUFACTURER IS NOT RESPONSIBLE FOR QUALITY CONTROL IN THE TRUSS MANUFACTURING PLANT .

NAIL VALUES

PLATE	GRIP(DRY) (PSI) MAX	MIN	SHEAR (PLI) MAX	MIN	SECTION (PLI) MAX	MIN
MT20	650	371	1747	788	1987	1873

PLATE PLACEMENT TOL. = 0.250 inches

PLATE ROTATION TOL. = 5.0 Deg.

JSI GRIP= 0.76 (I) (INPUT = 0.90)
JSI METAL= 0.60 (I) (INPUT = 1.00)

CONTINUED ON PAGE 2

JOB NAME	TRUSS NAME	QUANTITY	PLY	JOB DESC. BAYVIEW WELLINGTON	DRWG NO.
418651	T26	1	2	TRUSS DESC.	

PLATES (table is in inches)

JT	TYPE	PLATES	W	LEN	Y	X
B	TMWW-t	MT20	4.0	6.0	2.00	2.75
C	TTW+h	MT20	4.0	10.0	Edge	1.00
D	TMWW+t	MT20	4.0	6.0		
E	TMVW+p	MT20	6.0	7.0		
F	BMV1+p	MT20	4.0	6.0		
G	BMWW+t	MT20	4.0	10.0		
H	BMWWW-t	MT20	5.0	8.0	2.75	4.00
I	BMWW+t	MT20	5.0	8.0	4.25	2.50
J	BMV1+p	MT20	4.0	6.0		

Edge - INDICATES REFERENCE CORNER OF PLATE TOUCHES EDGE OF CHORD.

NOTES-

1) Lateral braces to be a minimum of 2X4 SPF #2.

LICENSED PROFESSIONAL ENGINEER
11/14/23
C. M. HEYENS
100505065
PROVINCE OF ONTARIO

STRUCTURAL COMPONENT ONLY
DWG # TR23111116

JOB NAME	TRUSS NAME	QUANTITY	PLY	JOB DESC.	DRWG NO.
418649	T50	1	2	BAYVIEW WELLINGTON TRUSS DESC.	

Tamarack Roof Truss, Burlington

Version 8.630 S Aug 30 2023 MiTek Industries, Inc. Tue Nov 14 11:15:04 2023 Page 1
ID:UaoF4umx8QMX1bo7Q0Zq7Cya5EO-MPnyaVrCzx3P1Sow5?C3t 7B4tM7TVcYSmBUkpyJIPr

Scale = 1:37.0

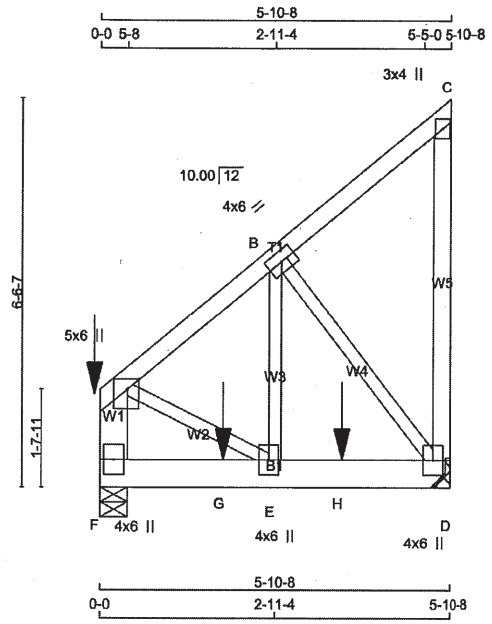

TOTAL WEIGHT = 2 X 36 = 73 lb

[M]

LUMBER

N. L. G. A. RULES

CHORDS	SIZE		LUMBER	DESCR.
F - A	2x6	DRY	No.2	SPF
A - C	2x4	DRY	No.2	SPF
D - C	2x4	DRY	No.2	SPF
F - D	2x6	DRY	No.2	SPF
ALL WEBS	2x3	DRY	No.2	SPF

DRY: SEASONED LUMBER.

DESIGN CONSISTS OF 2 TRUSSES BUILT SEPARATELY THEN FASTENED TOGETHER AS FOLLOWS:

CHORDS	#ROWS	SURFACE SPACING (IN)	LOAD(PLF)
TOP CHORDS : (0.122"X3") SPIRAL NAILS			
F- A	2	5	SIDE(148.3)
A- C	1	12	SIDE(61.0)
C- D	1	12	TOP
BOTTOM CHORDS : (0.122"X3") SPIRAL NAILS			
F- D	2	12	SIDE(0.0)
WEBS : (0.122"X3") SPIRAL NAILS			
2x3	1	6	

NAILS TO BE DRIVEN FROM ONE SIDE ONLY.

GIRDER NAILING ASSUMES NAILED HANGERS ARE FASTENED WITH MIN. 3-0 INCH NAILS.

TOP - COMPONENTS ARE LOADED FROM THE TOP AND MUST BE PLACED ON TOP EDGE OF ALL PLIES FOR THE LOAD TO BE TRANSFERRED TO EACH PLY.

SIDE - PLF SHOWN IS THE EQUIVALENT UDL APPLIED TO ONE SIDE THAT THE CORRESPONDING NAILING PATTERN SHALL BE CAPABLE OF TRANSFERING. REMAINING PLF MUST BE APPLIED ON THE OPPOSITE SIDE OR ON THE TOP.

PLATES (table is in inches)

JT	TYPE	PLATES	W	LEN	Y	X
A	TMVW+p	MT20	5.0	6.0	2.00	2.25
B	TMWW-t	MT20	4.0	6.0		
C	TMV+p	MT20	3.0	4.0		
D	BMVW1+p	MT20	4.0	6.0		
E	BMWW+t	MT20	4.0	6.0		

LICENSED PROFESSIONAL ENGINEER
11/14/23
C. M. HEYENS
100505065
PROVINCE OF ONTARIO

STRUCTURAL COMPONENT ONLY
DWG # TR23111094

DIMENSIONS, SUPPORTS AND LOADINGS SPECIFIED BY FABRICATOR TO BE VERIFIED BY BUILDING DESIGNER

BEARINGS

JT	FACTORED GROSS REACTION VERT	HORZ	MAXIMUM FACTORED GROSS REACTION DOWN	HORZ	UPLIFT	INPUT BRG IN-SX	REQRD BRG IN-SX
F	1999	0	1999	0	0	5-8	1-8
D	1200	0	1200	0	0	MECHANICAL	

A SUITABLE HANGER/MECHANICAL CONNECTION IS REQUIRED AT JOINT D. MINIMUM BEARING LENGTH AT JOINT D = 1-8.

UNFACTORED REACTIONS

JT	1ST LCASE COMBINED	MAX./MIN. COMPONENT REACTIONS SNOW	LIVE	PERM.LIVE	WIND	DEAD	SOIL
F	1388	1057 / 0	0 / 0	0 / 0	0 / 0	330 / 0	0 / 0
D	834	634 / 0	0 / 0	0 / 0	0 / 0	200 / 0	0 / 0

BEARING MATERIAL TO BE SPF NO.2 OR BETTER AT JOINT(S) F

BRACING

TOP CHORD TO BE SHEATHED OR MAX. PURLIN SPACING = 6.25 FT.
MAX. UNBRACED BOTTOM CHORD LENGTH = 10.00 FT OR RIGID CEILING DIRECTLY APPLIED.

ALL PITCH BREAKS AND PERIMETER CORNER JOINTS MUST BE LATERALLY RESTRAINED.

LOADING

TOTAL LOAD CASES: (4)

CHORDS

MEMB. FR-TO	MAX. FACTORED FORCE (LBS)	FACTORED VERT. LOAD LC1 (PLF) FROM	TO	MAX CSI (LC)	MAX. UNBRAC LENGTH
F- A	-1821 / 0	0.0	0.0	0.07 (1)	7.81
A- B	-881 / 0	-129.7	-129.7	0.10 (1)	6.25
B- C	-28 / 0	-129.7	-129.7	0.10 (1)	6.25
D- C	-147 / 0	0.0	0.0	0.06 (1)	7.81
F- G	0 / 0	-18.5	-18.5	0.12 (1)	10.00
G- E	0 / 0	-18.5	-18.5	0.12 (1)	10.00
E- H	0 / 698	-18.5	-18.5	0.16 (1)	10.00
H- D	0 / 698	-18.5	-18.5	0.16 (1)	10.00

WEBS

MEMB. FR-TO	MAX. FACTORED FORCE (LBS)	MAX CSI (LC)
A- E	0 / 756	0.09 (1)
E- B	0 / 985	0.12 (1)
B- D	-1117 / 0	0.20 (1)

SPECIFIED CONCENTRATED LOADS (LBS)

JT	LOC.	LC1	MAX-	MAX+	FACE	DIR.	TYPE	HEEL	CONN.
A	0-0	-557	-557	—	FRONT	VERT	TOTAL	—	C1
G	2-0-12	-590	-590	—	FRONT	VERT	TOTAL	—	C1
H	4-0-12	-467	-467	—	FRONT	VERT	TOTAL	—	C1

CONNECTION REQUIREMENTS

1) **C1:** A SUITABLE HANGER/MECHANICAL CONNECTION IS REQUIRED.

DESIGN CRITERIA

SPECIFIED LOADS:

TOP CH.	LL	=	38.3	PSF
	DL	=	6.0	PSF
BOT CH.	LL	=	0.0	PSF
	DL	=	7.4	PSF
TOTAL LOAD		=	51.6	PSF

SPACING = 24.0 IN. C/C

THIS TRUSS IS DESIGNED FOR RESIDENTIAL OR SMALL BUILDING REQUIREMENTS OF PART 9, NBCC 2015

THIS DESIGN COMPLIES WITH:
- PART 9 OF BCBC 2018 , NBC-2019AE
- PART 9 OF OBC 2012 (2019 AMENDMENT)
- CSA 086-14
- TPIC 2014

(55 % OF 54.4 P.S.F. G.S.L. PLUS 8.4 P.S.F. RAIN LOAD) EQUALS 38.3 P.S.F. SPECIFIED ROOF LIVE LOAD

ALLOWABLE DEFL.(LL)= L/360 (0.20")
CALCULATED VERT. DEFL.(LL) = L/ 999 (0.01")
ALLOWABLE DEFL.(TL)= L/360 (0.20")
CALCULATED VERT. DEFL.(TL) = L/ 999 (0.01")

CSI: TC=0.10/1.00 (A-B:1) , BC=0.16/1.00 (D-E:1) , WB=0.20/1.00 (B-D:1) , SSI=0.24/1.00 (E-F:1)

DOL LUMBER=1.00 NAIL=1.00 LS BEND=1.00 COMP=1.00 SHEAR=1.00 TENS= 1.00

COMPANION LIVE LOAD FACTOR = 1.00

TRUSS PLATE MANUFACTURER IS NOT RESPONSIBLE FOR QUALITY CONTROL IN THE TRUSS MANUFACTURING PLANT .

NAIL VALUES

PLATE	GRIP(DRY) (PSI) MAX	MIN	SHEAR (PLI) MAX	MIN	SECTION (PLI) MAX	MIN
MT20	650	371	1747	788	1987	1873

PLATE PLACEMENT TOL. = 0.250 inches

PLATE ROTATION TOL. = 5.0 Deg.

JSI GRIP= 0.45 (B) (INPUT = 0.90)
JSI METAL= 0.20 (A) (INPUT = 1.00)

CONTINUED ON PAGE 2

JOB NAME	TRUSS NAME	QUANTITY	PLY	JOB DESC.	DRWG NO.
418649	T50	1	2	BAYVIEW WELLINGTON TRUSS DESC.	

PLATES (table is in inches)

JT	TYPE	PLATES	W	LEN	Y	X
F	BMV1+p	MT20	4.0	6.0		

NOTES-

1) Lateral braces to be a minimum of 2X4 SPF #2.

LICENSED PROFESSIONAL ENGINEER
11/14/23
C. M. HEYENS
100505065
PROVINCE OF ONTARIO

STRUCTURAL COMPONENT ONLY
DWG # TR23111094

JOB NAME	TRUSS NAME	QUANTITY	PLY	JOB DESC.	DRWG NO.
418649	T50Z	1	2	BAYVIEW WELLINGTON TRUSS DESC.	

Tamarack Roof Truss, Burlington

Version 8.630 S Aug 30 2023 MiTek Industries, Inc. Tue Nov 14 11:15:05 2023 Page 1
ID:UaoF4umx8QMX1bo7Q0Zq7Cya5EO-qbKLnrsrkEBGebN6fijlQCqMqHfvCx6hhQw2GFyJIPq

Scale = 1:37.0

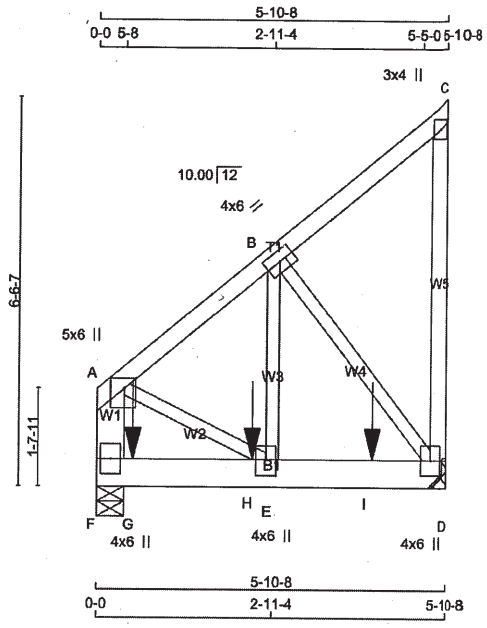

TOTAL WEIGHT = 2 X 36 = 73 lb
[M]

LUMBER
N. L. G. A. RULES

CHORDS	SIZE		LUMBER	DESCR.
F - A	2x6	DRY	No.2	SPF
A - C	2x4	DRY	No.2	SPF
D - C	2x4	DRY	No.2	SPF
F - D	2x6	DRY	No.2	SPF
ALL WEBS	2x3	DRY	No.2	SPF

DRY: SEASONED LUMBER.

DESIGN CONSISTS OF 2 TRUSSES BUILT SEPARATELY THEN FASTENED TOGETHER AS FOLLOWS:

CHORDS	#ROWS	SURFACE SPACING (IN)	LOAD(PLF)
TOP CHORDS : (0.122"X3") SPIRAL NAILS			
F- A	2	12	TOP
A- C	1	12	TOP
C- D	1	12	TOP
BOTTOM CHORDS : (0.122"X3") SPIRAL NAILS			
F- D	2	12	SIDE(183.1)
WEBS : (0.122"X3") SPIRAL NAILS			
B- E	1	6	SIDE(179.5)
2x3	1	6	

NAILS TO BE DRIVEN FROM ONE SIDE ONLY.

GIRDER NAILING ASSUMES NAILED HANGERS ARE FASTENED WITH MIN. 3-0 INCH NAILS.

TOP - COMPONENTS ARE LOADED FROM THE TOP AND MUST BE PLACED ON TOP EDGE OF ALL PLIES FOR THE LOAD TO BE TRANSFERRED TO EACH PLY.

SIDE - PLF SHOWN IS THE EQUIVALENT UDL APPLIED TO ONE SIDE THAT THE CORRESPONDING NAILING PATTERN SHALL BE CAPABLE OF TRANSFERING. REMAINING PLF MUST BE APPLIED ON THE OPPOSITE SIDE OR ON THE TOP.

PLATES (table is in inches)

JT	TYPE	PLATES	W	LEN	Y	X
A	TMVW+p	MT20	5.0	6.0	2.00	2.25
B	TMWW-t	MT20	4.0	6.0		
C	TMV+p	MT20	3.0	4.0		
D	BMVW1+p	MT20	4.0	6.0		

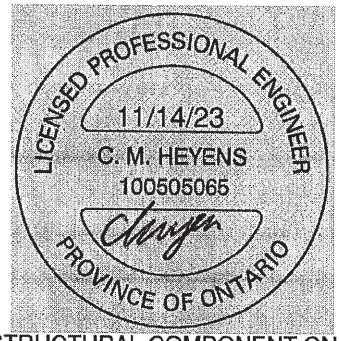

STRUCTURAL COMPONENT ONLY
DWG # TR23111095

DIMENSIONS, SUPPORTS AND LOADINGS SPECIFIED BY FABRICATOR TO BE VERIFIED BY BUILDING DESIGNER

BEARINGS

JT	FACTORED GROSS REACTION VERT	HORZ	MAXIMUM FACTORED GROSS REACTION DOWN	HORZ	UPLIFT	INPUT BRG IN-SX	REQRD BRG IN-SX
F	1935	0	1935	0	0	5-8	1-8
D	2190	0	2190	0	0	MECHANICAL	

A SUITABLE HANGER/MECHANICAL CONNECTION IS REQUIRED AT JOINT D. MINIMUM BEARING LENGTH AT JOINT D = 1-8.

UNFACTORED REACTIONS

JT	1ST LCASE COMBINED	MAX./MIN. COMPONENT REACTIONS SNOW	LIVE	PERM.LIVE	WIND	DEAD	SOIL
F	1345	1015 / 0	0 / 0	0 / 0	0 / 0	330 / 0	0 / 0
D	1520	1158 / 0	0 / 0	0 / 0	0 / 0	363 / 0	0 / 0

BEARING MATERIAL TO BE SPF NO.2 OR BETTER AT JOINT(S) F

BRACING
TOP CHORD TO BE SHEATHED OR MAX. PURLIN SPACING = 6.25 FT.
MAX. UNBRACED BOTTOM CHORD LENGTH = 10.00 FT OR RIGID CEILING DIRECTLY APPLIED.

ALL PITCH BREAKS AND PERIMETER CORNER JOINTS MUST BE LATERALLY RESTRAINED.

LOADING
TOTAL LOAD CASES: (4)

CHORDS

MEMB. FR-TO	MAX. FACTORED FORCE (LBS)	FACTORED VERT. LOAD (PLF) FROM	TO	LC1 MAX CSI (LC)	MAX. UNBRAC LENGTH
F- A	-1521 / 0	0.0	0.0	0.06 (1)	7.81
A- B	-1403 / 0	-129.7	-129.7	0.10 (1)	6.25
B- C	-27 / 0	-129.7	-129.7	0.09 (1)	6.25
D- C	-149 / 0	0.0	0.0	0.06 (1)	7.81
F- G	0 / 0	-18.5	-18.5	0.16 (1)	10.00
G- H	0 / 0	-18.5	-18.5	0.16 (1)	10.00
H- E	0 / 0	-18.5	-18.5	0.16 (1)	10.00
E- I	0 / 1098	-18.5	-18.5	0.38 (1)	10.00
I- D	0 / 1098	-18.5	-18.5	0.38 (1)	10.00

WEBS

MEMB. FR-TO	MAX. FACTORED FORCE (LBS)	MAX CSI (LC)
A- E	0 / 1190	0.15 (1)
E- B	0 / 1824	0.23 (1)
B- D	-1758 / 0	0.31 (1)

SPECIFIED CONCENTRATED LOADS (LBS)

JT	LOC.	LC1	MAX-	MAX+	FACE	DIR.	TYPE	HEEL	CONN.
G	7-4	-330	-330	---	BACK	VERT	TOTAL	---	C1
H	2-7-4	-964	-964	---	BACK	VERT	TOTAL	---	C1
I	4-7-4	-964	-964	---	BACK	VERT	TOTAL	---	C1

CONNECTION REQUIREMENTS

1) **C1:** A SUITABLE HANGER/MECHANICAL CONNECTION IS REQUIRED.

DESIGN CRITERIA

SPECIFIED LOADS:

TOP	CH.	LL	=	38.3	PSF
		DL	=	6.0	PSF
BOT	CH.	LL	=	0.0	PSF
		DL	=	7.4	PSF
TOTAL	LOAD		=	51.6	PSF

SPACING = 24.0 IN. C/C

THIS TRUSS IS DESIGNED FOR RESIDENTIAL OR SMALL BUILDING REQUIREMENTS OF PART 9, NBCC 2015

THIS DESIGN COMPLIES WITH:
- PART 9 OF BCBC 2018 , NBC-2019AE
- PART 9 OF OBC 2012 (2019 AMENDMENT)
- CSA 086-14
- TPIC 2014

(55 % OF 54.4 P.S.F. G.S.L. PLUS 8.4 P.S.F. RAIN LOAD) EQUALS 38.3 P.S.F. SPECIFIED ROOF LIVE LOAD

ALLOWABLE DEFL.(LL)= L/360 (0.20")
CALCULATED VERT. DEFL.(LL) = L/ 999 (0.01")
ALLOWABLE DEFL.(TL)= L/360 (0.20")
CALCULATED VERT. DEFL.(TL) = L/ 999 (0.02")

CSI: TC=0.10/1.00 (A-B:1) , BC=0.38/1.00 (D-E:1) , WB=0.31/1.00 (B-D:1) , SSI=0.50/1.00 (E-F:1)

DOL LUMBER=1.00 NAIL=1.00 LS BEND=1.00 COMP=1.00 SHEAR=1.00 TENS= 1.00

COMPANION LIVE LOAD FACTOR = 1.00

TRUSS PLATE MANUFACTURER IS NOT RESPONSIBLE FOR QUALITY CONTROL IN THE TRUSS MANUFACTURING PLANT .

NAIL VALUES

PLATE	GRIP(DRY) (PSI) MAX	MIN	SHEAR (PLI) MAX	MIN	SECTION (PLI) MAX	MIN
MT20	650	371	1747	788	1987	1873

PLATE PLACEMENT TOL. = 0.250 inches

PLATE ROTATION TOL. = 5.0 Deg.

JSI GRIP= 0.84 (B) (INPUT = 0.90)
JSI METAL= 0.26 (E) (INPUT = 1.00)

CONTINUED ON PAGE 2

JOB NAME	TRUSS NAME	QUANTITY	PLY	JOB DESC.	DRWG NO.
418649	T50Z	1	2	BAYVIEW WELLINGTON TRUSS DESC.	

Tamarack Roof Truss, Burlington

ID:UaoF4umx8QMX1bo7Q0Zg7Cya5EO-gbKLnrsrkEBGebN6fijlQCgMqHfvCx6hhQw2GFyJIPg

PLATES (table is in inches)

JT	TYPE	PLATES	W	LEN	Y	X
E	BMWW+t	MT20	4.0	6.0	3.25	2.00
F	BMV1+p	MT20	4.0	6.0		

NOTES-

1) Lateral braces to be a minimum of 2X4 SPF #2.

LICENSED PROFESSIONAL ENGINEER
11/14/23
C. M. HEYENS
100505065
PROVINCE OF ONTARIO

STRUCTURAL COMPONENT ONLY
DWG # TR23111095

JOB NAME	TRUSS NAME	QUANTITY	PLY	JOB DESC.	DRWG NO.
418649	T51	1	2	BAYVIEW WELLINGTON TRUSS DESC.	

Tamarack Roof Truss, Burlington

Version 8.630 S Aug 30 2023 MiTek Industries, Inc. Tue Nov 14 11:15:06 2023 Page 1
ID:UaoF4umx8QMX1bo7Q0Zq7Cya5EO-Ioujj?BtTVYJ7GlyJDQFXyPDWvh2dxQRrw4gbohyJIPp

Scale = 1:22.7

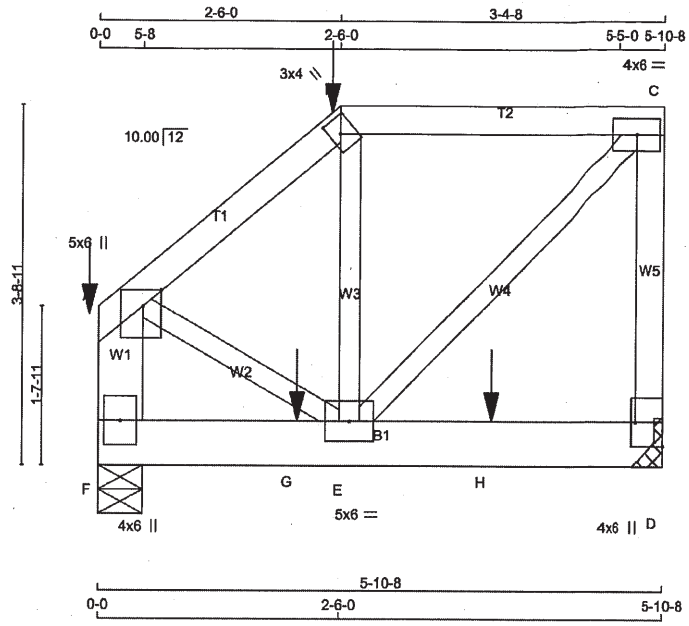

TOTAL WEIGHT = 2 X 32 = 63 lb

LUMBER

N. L. G. A. RULES

CHORDS	SIZE		LUMBER	DESCR.
A - B	2x4	DRY	No.2	SPF
B - C	2x4	DRY	No.2	SPF
D - C	2x4	DRY	No.2	SPF
F - A	2x6	DRY	No.2	SPF
F - D	2x6	DRY	No.2	SPF
ALL WEBS EXCEPT	2x3	DRY	No.2	SPF

DRY: SEASONED LUMBER.

DESIGN CONSISTS OF 2 TRUSSES BUILT SEPARATELY THEN FASTENED TOGETHER AS FOLLOWS:

CHORDS	#ROWS	SURFACE SPACING (IN)	LOAD(PLF)
TOP CHORDS : (0.122"X3") SPIRAL NAILS			
A- B	1	12	SIDE(61.0)
B- C	1	12	SIDE(61.0)
C- D	1	12	TOP
F- A	2	5	SIDE(148.3)
BOTTOM CHORDS : (0.122"X3") SPIRAL NAILS			
F- D	2	12	SIDE(0.0)
WEBS : (0.122"X3") SPIRAL NAILS			
E- B	1	6	SIDE(40.9)
2x3	1	6	

NAILS TO BE DRIVEN FROM ONE SIDE ONLY.

GIRDER NAILING ASSUMES NAILED HANGERS ARE FASTENED WITH MIN. 3-0 INCH NAILS.

TOP - COMPONENTS ARE LOADED FROM THE TOP AND MUST BE PLACED ON TOP EDGE OF ALL PLIES FOR THE LOAD TO BE TRANSFERRED TO EACH PLY.

SIDE - PLF SHOWN IS THE EQUIVALENT UDL APPLIED TO ONE SIDE THAT THE CORRESPONDING NAILING PATTERN SHALL BE CAPABLE OF TRANSFERING. REMAINING PLF MUST BE APPLIED ON THE OPPOSITE SIDE OR ON THE TOP.

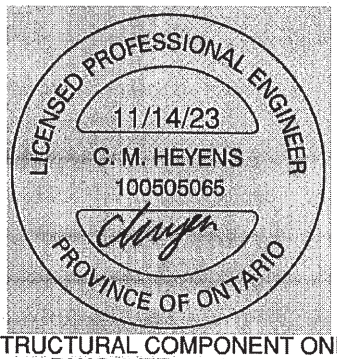

STRUCTURAL COMPONENT ONLY
DWG # TR23111096

DIMENSIONS, SUPPORTS AND LOADINGS SPECIFIED BY FABRICATOR TO BE VERIFIED BY BUILDING DESIGNER

BEARINGS

JT	FACTORED GROSS REACTION VERT	HORZ	MAXIMUM FACTORED GROSS REACTION DOWN	HORZ	UPLIFT	INPUT BRG	REQRD BRG
D	1466	0	1466	0	0	MECHANICAL	
F	2357	0	2357	0	0	5-8	1-8

A SUITABLE HANGER/MECHANICAL CONNECTION IS REQUIRED AT JOINT D. MINIMUM BEARING LENGTH AT JOINT D = 1-8.

UNFACTORED REACTIONS

JT	1ST LCASE COMBINED	MAX./MIN. COMPONENT REACTIONS SNOW	LIVE	PERM.LIVE	WIND	DEAD	SOIL
D	1015	791 / 0	0 / 0	0 / 0	0 / 0	224 / 0	0 / 0
F	1632	1269 / 0	0 / 0	0 / 0	0 / 0	364 / 0	0 / 0

BEARING MATERIAL TO BE SPF NO.2 OR BETTER AT JOINT(S) F

BRACING

TOP CHORD TO BE SHEATHED OR MAX. PURLIN SPACING = 6.25 FT.
MAX. UNBRACED BOTTOM CHORD LENGTH = 10.00 FT OR RIGID CEILING DIRECTLY APPLIED.

ALL PITCH BREAKS AND PERIMETER CORNER JOINTS MUST BE LATERALLY RESTRAINED.

LOADING

TOTAL LOAD CASES: (4)

CHORDS

MEMB. FR-TO	MAX. FACTORED FORCE (LBS)	FACTORED VERT. LOAD (PLF) FROM	TO	LC1	MAX CSI (LC)	MAX. UNBRAC LENGTH
A- B	-1290 / 0	-129.7	-129.7	0.08 (1)	6.25	
B- C	-981 / 0	-129.7	-129.7	0.14 (1)	6.25	
D- C	-1217 / 0	0.0	0.0	0.13 (1)	7.81	
F- A	-2258 / 0	0.0	0.0	0.08 (1)	7.81	
F- G	0 / 0	-18.5	-18.5	0.10 (1)	10.00	
G- E	0 / 0	-18.5	-18.5	0.10 (1)	10.00	
E- H	0 / 0	-18.5	-18.5	0.16 (1)	10.00	
H- D	0 / 0	-18.5	-18.5	0.16 (1)	10.00	

WEBS

MEMB. FR-TO	MAX. FACTORED FORCE (LBS)	MAX CSI (LC)
E- B	-181 / 38	0.02 (1)
E- C	0 / 1404	0.17 (1)
A- E	0 / 1090	0.13 (1)

SPECIFIED CONCENTRATED LOADS (LBS)

JT	LOC.	LC1	MAX-	MAX+	FACE	DIR.	TYPE	HEEL	CONN.
A	0-0	-557	-557	---	FRONT	VERT	TOTAL	---	C1
B	2-6-0	-58	-58	---	FRONT	VERT	DEAD	---	C1
B	2-6-0	-368	-368	---	FRONT	VERT	SNOW	---	C1
G	2-0-12	-590	-590	---	BACK	VERT	TOTAL	---	C1
H	4-0-12	-467	-467	---	BACK	VERT	TOTAL	---	C1

CONNECTION REQUIREMENTS

1) **C1:** A SUITABLE HANGER/MECHANICAL CONNECTION IS REQUIRED.

DESIGN CRITERIA

*** SPECIAL LOADS ANALYSIS ***
GEOMETRY AND/OR BASIC LOADS CHANGED BY USER.
LOADS WERE DERIVED FROM USER INPUT
NO FURTHER MODIFICATIONS WERE MADE

SPECIFIED LOADS:

TOP CH.	LL	=	38.3	PSF
	DL	=	6.0	PSF
BOT CH.	LL	=	0.0	PSF
	DL	=	7.4	PSF
TOTAL LOAD		=	51.6	PSF

SPACING = 24.0 IN. C/C

LOADING IN FLAT SECTION BASED ON A SLOPE OF 6.00/12

*** NON STANDARD GIRDER ***
ADDT'L USER-DEFINED LOADS APPLIED TO ALL LOAD CASES.

THIS TRUSS IS DESIGNED FOR RESIDENTIAL OR SMALL BUILDING REQUIREMENTS OF PART 9, NBCC 2015

THIS DESIGN COMPLIES WITH:
- PART 9 OF BCBC 2018 , NBC-2019AE
- PART 9 OF OBC 2012 (2019 AMENDMENT)
- CSA 086-14
- TPIC 2014

(55 % OF 54.4 P.S.F. G.S.L. PLUS 8.4 P.S.F. RAIN LOAD) EQUALS 38.3 P.S.F. SPECIFIED ROOF LIVE LOAD

ALLOWABLE DEFL.(LL)= L/360 (0.20")
CALCULATED VERT. DEFL.(LL) = L/ 999 (0.01")
ALLOWABLE DEFL.(TL)= L/360 (0.20")
CALCULATED VERT. DEFL.(TL) = L/ 999 (0.01")

CSI: TC=0.14/1.00 (B-C:1) , BC=0.16/1.00 (D-E:1) , WB=0.17/1.00 (C-E:1) , SSI=0.27/1.00 (E-F:1)

DOL LUMBER=1.00 NAIL=1.00 LS BEND=1.00 COMP=1.00 SHEAR=1.00 TENS= 1.00

COMPANION LIVE LOAD FACTOR = 1.00

AUTOSOLVE RIGHT HEEL ONLY

TRUSS PLATE MANUFACTURER IS NOT RESPONSIBLE FOR QUALITY CONTROL IN THE TRUSS MANUFACTURING PLANT .

NAIL VALUES

PLATE	GRIP(DRY) (PSI) MAX	MIN	SHEAR (PLI) MAX	MIN	SECTION (PLI) MAX	MIN
MT20	650	371	1747	788	1987	1873

PLATE PLACEMENT TOL. = 0.250 inches

PLATE ROTATION TOL. = 5.0 Deg.

JSI GRIP= 0.77 (B) (INPUT = 0.90)
JSI METAL= 0.23 (A) (INPUT = 1.00)

CONTINUED ON PAGE 2

JOB NAME	TRUSS NAME	QUANTITY	PLY	JOB DESC.	DRWG NO.
418649	T51	1	2	BAYVIEW WELLINGTON TRUSS DESC.	

Tamarack Roof Truss, Burlington

Version 8.630 S Aug 30 2023 MiTek Industries, Inc. Tue Nov 14 11:15:06 2023 Page 2
ID:UaoF4umx8QMX1bo7Q0Zg7Cya5EO-Iouj?BtTVYJ7GlyJDQFXyPDWvh2dxQRrw4gbohyJlPp

PLATES (table is in inches)

JT	TYPE	PLATES	W	LEN	Y	X
A	TMVW+p	MT20	5.0	6.0	2.00	2.25
B	TTW+h	MT20	3.0	4.0	2.00	1.25
C	TMVW-t	MT20	4.0	6.0		
D	BMV1+p	MT20	4.0	6.0	3.00	Edge
E	BMWWW-t	MT20	5.0	6.0		
F	BMV1+p	MT20	4.0	6.0		

Edge - INDICATES REFERENCE CORNER OF PLATE TOUCHES EDGE OF CHORD.

NOTES-

1) Lateral braces to be a minimum of 2X4 SPF #2.

LICENSED PROFESSIONAL ENGINEER
11/14/23
C. M. HEYENS
100505065
PROVINCE OF ONTARIO

STRUCTURAL COMPONENT ONLY
DWG # TR23111096

JOB NAME	TRUSS NAME	QUANTITY	PLY	JOB DESC.	DRWG NO.
418651	T60	1	2	BAYVIEW WELLINGTON TRUSS DESC.	

Tamarack Roof Truss, Burlington

Version 8.630 S Aug 30 2023 MiTek Industries, Inc. Tue Nov 14 12:09:31 2023 Page 1
ID:UaoF4umx8QMX1bo7Q0Zg7Cya5EO-Cwg0FcNUajgsTW2p dJBnxxLVqKUR3aQlY4suyyJHco

Scale = 1:35.6

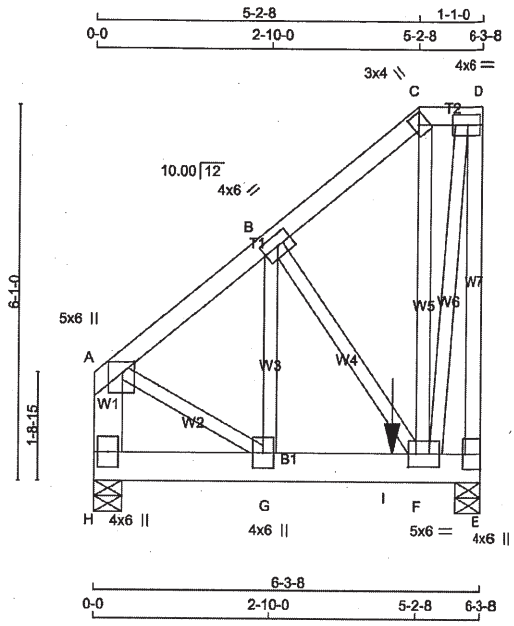

TOTAL WEIGHT = 2 X 46 = 92 lb
[M]

LUMBER
N. L. G. A. RULES

CHORDS	SIZE		LUMBER	DESCR.
A - C	2x4	DRY	No.2	SPF
C - D	2x4	DRY	No.2	SPF
E - D	2x4	DRY	No.2	SPF
H - A	2x6	DRY	No.2	SPF
H - E	2x6	DRY	No.2	SPF
ALL WEBS EXCEPT	2x3	DRY	No.2	SPF

DRY: SEASONED LUMBER.

DESIGN CONSISTS OF 2 TRUSSES BUILT SEPARATELY THEN FASTENED TOGETHER AS FOLLOWS:

CHORDS	#ROWS	SURFACE SPACING (IN)	LOAD(PLF)
TOP CHORDS : (0.122"X3") SPIRAL NAILS			
A- C	1	8	SIDE(137.0)
C- D	1	6	SIDE(178.3)
D- E	1	12	TOP
H- A	2	12	TOP
BOTTOM CHORDS : (0.122"X3") SPIRAL NAILS			
H- E	2	12	SIDE(28.5)
WEBS : (0.122"X3") SPIRAL NAILS			
2x3	1	6	

NAILS TO BE DRIVEN FROM ONE SIDE ONLY.

GIRDER NAILING ASSUMES NAILED HANGERS ARE FASTENED WITH MIN. 3-0 INCH NAILS.

TOP - COMPONENTS ARE LOADED FROM THE TOP AND MUST BE PLACED ON TOP EDGE OF ALL PLIES FOR THE LOAD TO BE TRANSFERRED TO EACH PLY.

SIDE - PLF SHOWN IS THE EQUIVALENT UDL APPLIED TO ONE SIDE THAT THE CORRESPONDING NAILING PATTERN SHALL BE CAPABLE OF TRANSFERING. REMAINING PLF MUST BE APPLIED ON THE OPPOSITE SIDE OR ON THE TOP.

PLATES (table is in inches)

JT	TYPE	PLATES	W	LEN	Y	X
A	TMVW+p	MT20	5.0	6.0	2.00	2.25

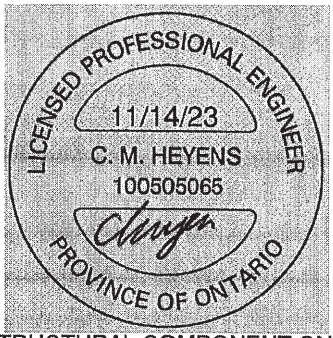

STRUCTURAL COMPONENT ONLY
DWG # TR23111117

DIMENSIONS, SUPPORTS AND LOADINGS SPECIFIED BY FABRICATOR TO BE VERIFIED BY BUILDING DESIGNER

BEARINGS

JT	FACTORED GROSS REACTION VERT	HORZ	MAXIMUM FACTORED GROSS REACTION DOWN	HORZ	UPLIFT	INPUT BRG IN-SX	REQRD BRG IN-SX
E	2625	0	2625	0	0	5-8	1-8
H	2018	0	2018	0	0	5-8	1-8

UNFACTORED REACTIONS

JT	1ST LCASE COMBINED	MAX./MIN. COMPONENT REACTIONS SNOW	LIVE	PERM.LIVE	WIND	DEAD	SOIL
E	1824	1378 / 0	0 / 0	0 / 0	0 / 0	446 / 0	0 / 0
H	1405	1049 / 0	0 / 0	0 / 0	0 / 0	356 / 0	0 / 0

BEARING MATERIAL TO BE SPF NO.2 OR BETTER AT JOINT(S) E, H

BRACING
TOP CHORD TO BE SHEATHED OR MAX. PURLIN SPACING = 6.25 FT.
MAX. UNBRACED BOTTOM CHORD LENGTH = 10.00 FT OR RIGID CEILING DIRECTLY APPLIED.

ALL PITCH BREAKS AND PERIMETER CORNER JOINTS MUST BE LATERALLY RESTRAINED.

LOADING
TOTAL LOAD CASES: (4)

CHORDS

MEMB. FR-TO	MAX. FACTORED FORCE (LBS)	FACTORED VERT. LOAD (PLF) FROM	TO	LC1 MAX CSI (LC)
A- B	-1330 / 0	-486.4	-486.4	0.31 (1)
B- C	-560 / 0	-486.4	-486.4	0.30 (1)
C- D	-338 / 0	-486.4	-486.4	0.05 (1)
E- D	-2227 / 0	0.0	0.0	0.75 (1)
H- A	-1967 / 0	0.0	0.0	0.07 (1)
H- G	0 / 0	-69.4	-69.4	0.05 (1)
G- I	0 / 1092	-69.4	-69.4	0.35 (1)
I- F	0 / 1092	-69.4	-69.4	0.35 (1)
F- E	0 / 0	-69.4	-69.4	0.13 (1)

WEBS

MAX. UNBRAC LENGTH	MEMB. FR-TO	MAX. FACTORED FORCE (LBS)	MAX CSI (LC)
6.25	F- C	-388 / 0	0.11 (1)
6.25	F- D	0 / 1999	0.25 (1)
6.25	B- F	-1338 / 0	0.22 (1)
7.48	G- B	0 / 211	0.04 (4)
7.81	A- G	0 / 1205	0.15 (1)
10.00			
10.00			
10.00			
10.00			

SPECIFIED CONCENTRATED LOADS (LBS)

JT	LOC.	LC1	MAX-	MAX+	FACE	DIR.	TYPE	HEEL	CONN.
I	4-9-12	-792	-792	—	FRONT	VERT	TOTAL	—	C1

CONNECTION REQUIREMENTS

1) **C1:** A SUITABLE HANGER/MECHANICAL CONNECTION IS REQUIRED.

DESIGN CRITERIA

SPECIFIED LOADS:

TOP CH.	LL	=	38.3	PSF
	DL	=	6.0	PSF
BOT CH.	LL	=	0.0	PSF
	DL	=	7.4	PSF
TOTAL LOAD		=	51.6	PSF

SPACING = 24.0 IN. C/C

LOADING IN FLAT SECTION BASED ON A SLOPE OF 6.00/12

GIRDER TYPE: CPrimeHip
SIDE SETBACK = 0-0
END SETBACK = 13-0-0
END WALL WIDTH = 0-0
CORNER FRAMING TYPE: CONVENTIONAL
END JACK TYPE: CONVENTIONAL
APPLIED TO BACK SIDE
- ADDT'L LOADS BASED ON 55 % OF GSL.

THIS TRUSS IS DESIGNED FOR RESIDENTIAL OR SMALL BUILDING REQUIREMENTS OF PART 9, NBCC 2015

THIS DESIGN COMPLIES WITH:
- PART 9 OF BCBC 2018 , NBC-2019AE
- PART 9 OF OBC 2012 (2019 AMENDMENT)
- CSA 086-14
- TPIC 2014

(55 % OF 54.4 P.S.F. G.S.L. PLUS 8.4 P.S.F. RAIN LOAD) EQUALS 38.3 P.S.F. SPECIFIED ROOF LIVE LOAD

ALLOWABLE DEFL.(LL)= L/360 (0.21")
CALCULATED VERT. DEFL.(LL) = L/ 999 (0.02")
ALLOWABLE DEFL.(TL)= L/360 (0.21")
CALCULATED VERT. DEFL.(TL) = L/ 999 (0.03")

CSI: TC=0.75/1.00 (D-E:1) , BC=0.35/1.00 (F-G:1) , WB=0.25/1.00 (D-F:1) , SSI=0.27/1.00 (A-B:1)

DOL LUMBER=1.00 NAIL=1.00 LS BEND=1.00 COMP=1.00 SHEAR=1.00 TENS= 1.00

COMPANION LIVE LOAD FACTOR = 1.00

AUTOSOLVE RIGHT HEEL ONLY

TRUSS PLATE MANUFACTURER IS NOT RESPONSIBLE FOR QUALITY CONTROL IN THE TRUSS MANUFACTURING PLANT .

NAIL VALUES

PLATE	GRIP(DRY) (PSI) MAX	MIN	SHEAR (PLI) MAX	MIN	SECTION (PLI) MAX	MIN
MT20	650	371	1747	788	1987	1873

PLATE PLACEMENT TOL. = 0.250 Inches

PLATE ROTATION TOL. = 5.0 Deg.

JSI GRIP= 0.86 (F) (INPUT = 0.90)
JSI METAL= 0.27 (F) (INPUT = 1.00)

CONTINUED ON PAGE 2

JOB NAME	TRUSS NAME	QUANTITY	PLY	JOB DESC.	DRWG NO.
418651	T60	1	2	BAYVIEW WELLINGTON TRUSS DESC.	

PLATES (table is in inches)

JT	TYPE	PLATES	W	LEN	Y	X
B	TMWW-t	MT20	4.0	6.0		
C	TTW+h	MT20	3.0	4.0	2.00	1.25
D	TMVW-t	MT20	4.0	6.0		
E	BMV1+p	MT20	4.0	6.0	3.00	Edge
F	BMWWW-t	MT20	5.0	6.0	2.50	1.50
G	BMWW+t	MT20	4.0	6.0		
H	BMV1+p	MT20	4.0	6.0		

Edge - INDICATES REFERENCE CORNER OF PLATE TOUCHES EDGE OF CHORD.

NOTES-

1) Lateral braces to be a minimum of 2X4 SPF #2.

LICENSED PROFESSIONAL ENGINEER
11/14/23
C. M. HEYENS
100505065
PROVINCE OF ONTARIO

STRUCTURAL COMPONENT ONLY
DWG # TR23111117

JOB NAME	TRUSS NAME	QUANTITY	PLY	JOB DESC.	DRWG NO.
418651	T61	1	2	BAYVIEW WELLINGTON TRUSS DESC.	

Tamarack Roof Truss, Burlington

Version 8.630 S Aug 30 2023 MiTek Industries, Inc. Tue Nov 14 12:09:32 2023 Page 1
ID:UaoF4umx8QMX1bo7Q0Zq7Cya5EO-q6EPSyO6L1oj5qd?XKrQK8UqDEfYAVJZxCpPROyJHcn

Scale = 1:37.0

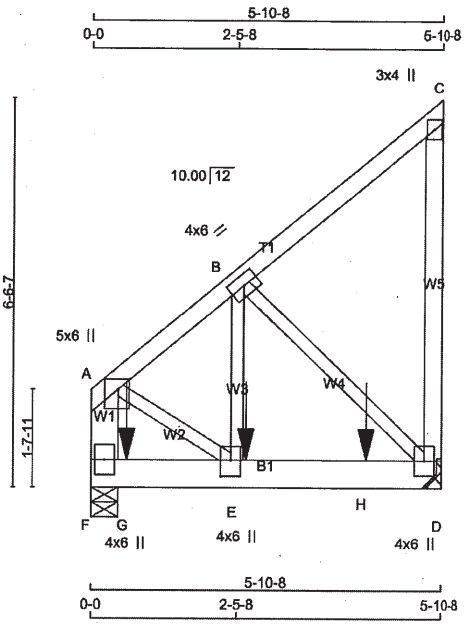

TOTAL WEIGHT = 2 X 36 = 72 lb

LUMBER

N. L. G. A. RULES

CHORDS	SIZE		LUMBER	DESCR.
A - C	2x4	DRY	No.2	SPF
D - C	2x4	DRY	No.2	SPF
F - A	2x6	DRY	No.2	SPF
F - D	2x6	DRY	No.2	SPF
ALL WEBS EXCEPT	2x3	DRY	No.2	SPF

DRY: SEASONED LUMBER.

DESIGN CONSISTS OF 2 TRUSSES BUILT SEPARATELY THEN FASTENED TOGETHER AS FOLLOWS:

CHORDS	#ROWS	SURFACE SPACING (IN)	LOAD(PLF)
TOP CHORDS : (0.122"X3") SPIRAL NAILS			
A- C	1	12	TOP
D- C	1	12	TOP
F- A	2	12	TOP
BOTTOM CHORDS : (0.122"X3") SPIRAL NAILS			
F- D	2	12	SIDE(183.1)
WEBS : (0.122"X3") SPIRAL NAILS			
E- B	1	6	SIDE(153.8)
2x3	1	6	

NAILS TO BE DRIVEN FROM ONE SIDE ONLY.

GIRDER NAILING ASSUMES NAILED HANGERS ARE FASTENED WITH MIN. 3-0 INCH NAILS.

TOP - COMPONENTS ARE LOADED FROM THE TOP AND MUST BE PLACED ON TOP EDGE OF ALL PLIES FOR THE LOAD TO BE TRANSFERRED TO EACH PLY.

SIDE - PLF SHOWN IS THE EQUIVALENT UDL APPLIED TO ONE SIDE THAT THE CORRESPONDING NAILING PATTERN SHALL BE CAPABLE OF TRANSFERING. REMAINING PLF MUST BE APPLIED ON THE OPPOSITE SIDE OR ON THE TOP.

PLATES (table is in inches)

JT	TYPE	PLATES	W	LEN	Y	X
A	TMVW+p	MT20	5.0	6.0	2.00	2.25
B	TMWW-t	MT20	4.0	6.0		

LICENSED PROFESSIONAL ENGINEER
11/14/23
C. M. HEYENS
100505065
PROVINCE OF ONTARIO

STRUCTURAL COMPONENT ONLY
DWG # TR23111118

DIMENSIONS, SUPPORTS AND LOADINGS SPECIFIED BY FABRICATOR TO BE VERIFIED BY BUILDING DESIGNER

BEARINGS

JT	FACTORED GROSS REACTION VERT	HORZ	MAXIMUM FACTORED GROSS REACTION DOWN	HORZ	UPLIFT	INPUT BRG IN-SX	REQRD BRG IN-SX
D	2036	0	2036	0	0	MECHANICAL	
F	1891	0	1891	0	0	5-8	1-8

A SUITABLE HANGER/MECHANICAL CONNECTION IS REQUIRED AT JOINT D. MINIMUM BEARING LENGTH AT JOINT D = 1-8.

UNFACTORED REACTIONS

MAX./MIN. COMPONENT REACTIONS

JT	1ST LCASE COMBINED	SNOW	LIVE	PERM.LIVE	WIND	DEAD	SOIL
D	1413	1078 / 0	0 / 0	0 / 0	0 / 0	335 / 0	0 / 0
F	1314	993 / 0	0 / 0	0 / 0	0 / 0	321 / 0	0 / 0

BEARING MATERIAL TO BE SPF NO.2 OR BETTER AT JOINT(S) F

BRACING

TOP CHORD TO BE SHEATHED OR MAX. PURLIN SPACING = 6.25 FT.
MAX. UNBRACED BOTTOM CHORD LENGTH = 10.00 FT OR RIGID CEILING DIRECTLY APPLIED.

ALL PITCH BREAKS AND PERIMETER CORNER JOINTS MUST BE LATERALLY RESTRAINED.

LOADING

TOTAL LOAD CASES: (4)

CHORDS

MEMB. FR-TO	MAX. FACTORED FORCE (LBS)	FACTORED VERT. LOAD (PLF) FROM	TO	LC1 CSI (LC)	MAX. UNBRAC LENGTH
A- B	-1462 / 0	-129.7	-129.7	0.11 (1)	6.25
B- C	-25 / 0	-129.7	-129.7	0.10 (1)	6.25
D- C	-183 / 0	0.0	0.0	0.07 (1)	7.81
F- A	-1635 / 0	0.0	0.0	0.06 (1)	7.81
F- G	0 / 0	-18.5	-18.5	0.11 (1)	10.00
G- E	0 / 0	-18.5	-18.5	0.11 (1)	10.00
E- H	0 / 1150	-18.5	-18.5	0.42 (1)	10.00
H- D	0 / 1150	-18.5	-18.5	0.42 (1)	10.00

WEBS

MEMB. FR-TO	MAX. FACTORED FORCE (LBS)	MAX CSI (LC)
E- B	0 / 1582	0.20 (1)
B- D	-1590 / 0	0.28 (1)
A- E	0 / 1284	0.16 (1)

SPECIFIED CONCENTRATED LOADS (LBS)

JT	LOC.	LC1	MAX-	MAX+	FACE	DIR.	TYPE	HEEL	CONN.
E	2-7-4	-895	-895	—	BACK	VERT	TOTAL	—	C1
G	7-4	-330	-330	—	BACK	VERT	TOTAL	—	C1
H	4-7-4	-895	-895	—	BACK	VERT	TOTAL	—	C1

CONNECTION REQUIREMENTS

1) **C1:** A SUITABLE HANGER/MECHANICAL CONNECTION IS REQUIRED.

[M]

DESIGN CRITERIA

SPECIFIED LOADS:

TOP CH.	LL	=	38.3	PSF
	DL	=	6.0	PSF
BOT CH.	LL	=	0.0	PSF
	DL	=	7.4	PSF
TOTAL LOAD		=	51.6	PSF

SPACING = 24.0 IN. C/C

THIS TRUSS IS DESIGNED FOR RESIDENTIAL OR SMALL BUILDING REQUIREMENTS OF PART 9, NBCC 2015

THIS DESIGN COMPLIES WITH:
- PART 9 OF BCBC 2018 , NBC-2019AE
- PART 9 OF OBC 2012 (2019 AMENDMENT)
- CSA 086-14
- TPIC 2014

(55 % OF 54.4 P.S.F. G.S.L. PLUS 8.4 P.S.F. RAIN LOAD) EQUALS 38.3 P.S.F. SPECIFIED ROOF LIVE LOAD

ALLOWABLE DEFL.(LL)= L/360 (0.20")
CALCULATED VERT. DEFL.(LL) = L/ 999 (0.02")
ALLOWABLE DEFL.(TL)= L/360 (0.20")
CALCULATED VERT. DEFL.(TL) = L/ 999 (0.03")

CSI: TC=0.11/1.00 (A-B:1) , BC=0.42/1.00 (D-E:1) , WB=0.28/1.00 (B-D:1) , SSI=0.25/1.00 (D-E:1)

DOL LUMBER=1.00 NAIL=1.00 LS BEND=1.00 COMP=1.00 SHEAR=1.00 TENS= 1.00

COMPANION LIVE LOAD FACTOR = 1.00

AUTOSOLVE RIGHT HEEL ONLY

TRUSS PLATE MANUFACTURER IS NOT RESPONSIBLE FOR QUALITY CONTROL IN THE TRUSS MANUFACTURING PLANT .

NAIL VALUES

PLATE	GRIP(DRY) (PSI) MAX	MIN	SHEAR (PLI) MAX	MIN	SECTION (PLI) MAX	MIN
MT20	650	371	1747	788	1987	1873

PLATE PLACEMENT TOL. = 0.250 inches

PLATE ROTATION TOL. = 5.0 Deg.

JSI GRIP= 0.72 (B) (INPUT = 0.90)
JSI METAL= 0.26 (E) (INPUT = 1.00)

CONTINUED ON PAGE 2

JOB NAME	TRUSS NAME	QUANTITY	PLY	JOB DESC. BAYVIEW WELLINGTON	DRWG NO.
418651	T61	1	2	TRUSS DESC.	

PLATES (table is in inches)

JT	TYPE	PLATES	W	LEN	Y	X
C	TMV+p	MT20	3.0	4.0		
D	BMVW1+p	MT20	4.0	6.0		
E	BMWW+t	MT20	4.0	6.0	3.25	2.00
F	BMV1+p	MT20	4.0	6.0		

NOTES-

1) Lateral braces to be a minimum of 2X4 SPF #2.

LICENSED PROFESSIONAL ENGINEER
11/14/23
C. M. HEYENS
100505065
PROVINCE OF ONTARIO

STRUCTURAL COMPONENT ONLY
DWG # TR23111118

JOB NAME	TRUSS NAME	QUANTITY	PLY	JOB DESC.	DRWG NO.
418649	T90	9	1	BAYVIEW WELLINGTON TRUSS DESC.	

Tamarack Roof Truss, Burlington

Version 8.630 S Aug 30 2023 MiTek Industries, Inc. Tue Nov 14 11:15:07 2023 Page 1
ID:UaoF4umx8QMX1bo7Q0Zq7Cya5EO-m S5CXt5GsR uvXVm7mmVdlh95QmgvG 8kP8K8yJIPo

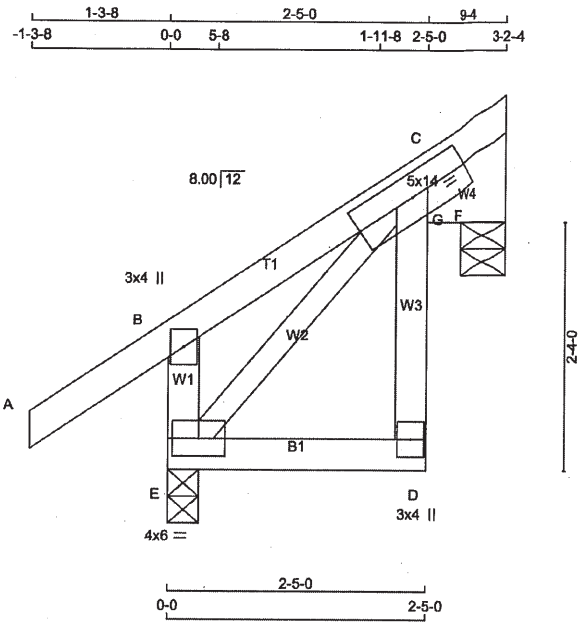

TOTAL WEIGHT = 9 X 18 = 160 lb

LUMBER
N. L. G. A. RULES

CHORDS	SIZE		LUMBER	DESCR.
A - C	2x4	DRY	No.2	SPF
D - C	2x4	DRY	No.2	SPF
E - B	2x4	DRY	No.2	SPF
E - D	2x4	DRY	No.2	SPF
ALL WEBS	2x3	DRY	No.2	SPF

DRY: SEASONED LUMBER.

PLATES (table is in inches)

JT	TYPE	PLATES	W	LEN Y	X
B	TMV+p	MT20	3.0	4.0	
C	TMVWW1-t	MT20	5.0	14.0	
D	BMV+p	MT20	3.0	4.0	
E	BMVW1-t	MT20	4.0	6.0	

NOTES-
1) Lateral braces to be a minimum of 2X4 SPF #2.

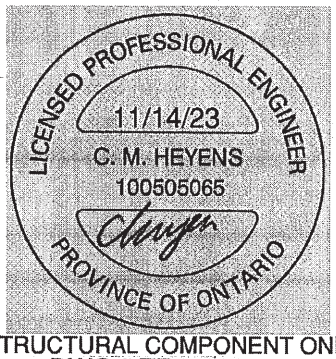

STRUCTURAL COMPONENT ONLY
DWG # TR23111097

DIMENSIONS, SUPPORTS AND LOADINGS SPECIFIED BY FABRICATOR TO BE VERIFIED BY BUILDING DESIGNER

BEARINGS

JT	FACTORED GROSS REACTION VERT	HORZ	MAXIMUM FACTORED GROSS REACTION DOWN	HORZ	UPLIFT	INPUT BRG IN-SX	REQRD BRG IN-SX
E	390	0	390	0	0	3-8	1-8
F	146	0	146	0	0	5-8	0-0

UNFACTORED REACTIONS

JT	1ST LCASE COMBINED	MAX./MIN. COMPONENT REACTIONS SNOW	LIVE	PERM.LIVE	WIND	DEAD	SOIL
E	269	214 / 0	0 / 0	0 / 0	0 / 0	55 / 0	0 / 0
F	102	75 / 0	0 / 0	0 / 0	0 / 0	26 / 0	0 / 0

BEARING MATERIAL TO BE SPF NO.2 OR BETTER AT JOINT(S) E, F

BRACING
TOP CHORD TO BE SHEATHED OR MAX. PURLIN SPACING = 10.00 FT.
MAX. UNBRACED BOTTOM CHORD LENGTH = 10.00 FT OR RIGID CEILING DIRECTLY APPLIED.

ALL PITCH BREAKS AND PERIMETER CORNER JOINTS MUST BE LATERALLY RESTRAINED.

LOADING
TOTAL LOAD CASES: (5)

CHORDS

MEMB. FR-TO	MAX. FACTORED FORCE (LBS)	FACTORED VERT. LOAD LC1 (PLF) FROM	TO	MAX CSI (LC)	MAX. UNBRAC LENGTH
A- B	0 / 49	-129.7	-129.7	0.17 (1)	10.00
B- C	0 / 0	-129.7	-129.7	0.13 (1)	10.00
D- G	0 / 25	0.0	0.0	0.09 (1)	10.00
G- C	0 / 25	0.0	0.0	0.09 (1)	10.00
E- B	-335 / 0	0.0	0.0	0.03 (1)	7.81
E- D	0 / 29	-18.5	-18.5	0.03 (4)	10.00

WEBS

MEMB. FR-TO	MAX. FACTORED FORCE (LBS)	MAX CSI (LC)
E- C	-44 / 0	0.01 (1)
C- F	-215 / 0	0.00 (1)
G- F	0 / 157	0.00 (1)

CANTILEVER ANALYSIS HAS BEEN CONSIDERED IN THIS DESIGN

DESIGN CRITERIA

SPECIFIED LOADS:

TOP CH.	LL	=	38.3	PSF
	DL	=	6.0	PSF
BOT CH.	LL	=	0.0	PSF
	DL	=	7.4	PSF
TOTAL LOAD		=	51.6	PSF

SPACING = 24.0 IN. C/C

THIS TRUSS IS DESIGNED FOR RESIDENTIAL OR SMALL BUILDING REQUIREMENTS OF PART 9, NBCC 2015

THIS DESIGN COMPLIES WITH:
- PART 9 OF BCBC 2018 , NBC-2019AE
- PART 9 OF OBC 2012 (2019 AMENDMENT)
- CSA 086-14
- TPIC 2014

(55 % OF 54.4 P.S.F. G.S.L. PLUS 8.4 P.S.F. RAIN LOAD) EQUALS 38.3 P.S.F. SPECIFIED ROOF LIVE LOAD

ALLOWABLE DEFL.(LL)= L/360 (0.19")
CALCULATED VERT. DEFL.(LL) = L/ 999 (0.00")
ALLOWABLE DEFL.(TL)= L/360 (0.19")
CALCULATED VERT. DEFL.(TL) = L/ 999 (0.00")

CSI: TC=0.17/1.00 (A-B:1) , BC=0.03/1.00 (D-E:4) , WB=0.01/1.00 (C-E:1) , SSI=0.12/1.00 (A-B:1)

DOL LUMBER=1.00 NAIL=1.00 LS BEND=1.10 COMP=1.10 SHEAR=1.10 TENS= 1.10

COMPANION LIVE LOAD FACTOR = 1.00

AUTOSOLVE RIGHT HEEL ONLY

TRUSS PLATE MANUFACTURER IS NOT RESPONSIBLE FOR QUALITY CONTROL IN THE TRUSS MANUFACTURING PLANT .

NAIL VALUES

PLATE	GRIP(DRY) (PSI) MAX	MIN	SHEAR (PLI) MAX	MIN	SECTION (PLI) MAX	MIN
MT20	650	371	1747	788	1987	1873

PLATE PLACEMENT TOL. = 0.250 inches

PLATE ROTATION TOL. = 5.0 Deg.

JSI GRIP= 0.14 (B) (INPUT = 0.90)
JSI METAL= 0.11 (B) (INPUT = 1.00)

JOB NAME	TRUSS NAME	QUANTITY	PLY	JOB DESC.	DRWG NO.
418649	T91	10	1	BAYVIEW WELLINGTON TRUSS DESC.	

Tamarack Roof Truss, Burlington

Version 8.630 S Aug 30 2023 MiTek Industries, Inc. Tue Nov 14 11:15:08 2023 Page 1

ID:UaoF4umx8QMX1bo7Q0Zg7Cya5EO-EA0TPtuj19ZrV36hKqH?1qIsqVIIPMb8NO9itayJIPn

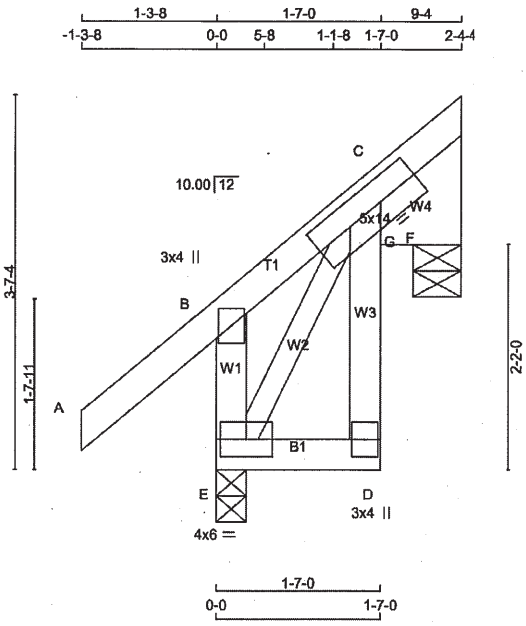

TOTAL WEIGHT = 10 X 17 = 165 lb

LUMBER

N. L. G. A. RULES

CHORDS	SIZE		LUMBER	DESCR.
A - C	2x4	DRY	No.2	SPF
D - C	2x4	DRY	No.2	SPF
E - B	2x4	DRY	No.2	SPF
E - D	2x4	DRY	No.2	SPF
ALL WEBS	2x3	DRY	No.2	SPF

DRY: SEASONED LUMBER.

PLATES (table is in inches)

JT	TYPE	PLATES	W	LEN	Y	X
B	TMV+p	MT20	3.0	4.0		
C	TMVWW1-t	MT20	5.0	14.0	2.50	4.50
D	BMV+p	MT20	3.0	4.0		
E	BMVW1-t	MT20	4.0	6.0		

NOTES-

1) Lateral braces to be a minimum of 2X4 SPF #2.

LICENSED PROFESSIONAL ENGINEER
11/14/23
C. M. HEYENS
100505065
PROVINCE OF ONTARIO

STRUCTURAL COMPONENT ONLY
DWG # TR23111098

DIMENSIONS, SUPPORTS AND LOADINGS SPECIFIED BY FABRICATOR TO BE VERIFIED BY BUILDING DESIGNER

BEARINGS

JT	FACTORED GROSS REACTION VERT	HORZ	MAXIMUM FACTORED GROSS REACTION DOWN	HORZ	UPLIFT	INPUT BRG IN-SX	REQRD BRG IN-SX
E	385	0	385	0	0	3-8	1-8
F	29	0	29	0	-44	5-8	0-0

UNFACTORED REACTIONS

JT	1ST LCASE COMBINED	MAX./MIN. COMPONENT REACTIONS SNOW	LIVE	PERM.LIVE	WIND	DEAD	SOIL
E	265	216 / 0	0 / 0	0 / 0	0 / 0	49 / 0	0 / 0
F	21	11 / -35	0 / 0	0 / 0	0 / 0	10 / 0	0 / 0

BEARING MATERIAL TO BE SPF NO.2 OR BETTER AT JOINT(S) E, F

BRACING

TOP CHORD TO BE SHEATHED OR MAX. PURLIN SPACING = 6.25 FT.
MAX. UNBRACED BOTTOM CHORD LENGTH = 10.00 FT OR RIGID CEILING DIRECTLY APPLIED.

ALL PITCH BREAKS AND PERIMETER CORNER JOINTS MUST BE LATERALLY RESTRAINED.

LOADING

TOTAL LOAD CASES: (5)

CHORDS MEMB. FR-TO	MAX. FACTORED FORCE (LBS)	FACTORED VERT. LOAD (PLF) FROM	TO	LC1 MAX CSI (LC)	MAX. UNBRAC LENGTH	WEBS MEMB. FR-TO	MAX. FACTORED FORCE (LBS)	MAX CSI (LC)
A- B	0 / 58	-129.7	-129.7	0.18 (1)	10.00	E- C	-12 / 18	0.00 (5)
B- C	-50 / 0	-129.7	-129.7	0.17 (1)	6.25	C- F	-39 / 60	0.00 (1)
D- G	0 / 16	0.0	0.0	0.03 (5)	10.00	G- F	-40 / 26	0.00 (1)
G- C	0 / 16	0.0	0.0	0.03 (5)	10.00			
E- B	-361 / 0	0.0	0.0	0.04 (1)	7.81			
E- D	-9 / 6	-18.5	-18.5	0.01 (4)	10.00			

CANTILEVER ANALYSIS HAS BEEN CONSIDERED IN THIS DESIGN

[M]

DESIGN CRITERIA

SPECIFIED LOADS:

TOP CH.	LL	=	38.3	PSF
	DL	=	6.0	PSF
BOT CH.	LL	=	0.0	PSF
	DL	=	7.4	PSF
TOTAL LOAD		=	51.6	PSF

SPACING = 24.0 IN. C/C

THIS TRUSS IS DESIGNED FOR RESIDENTIAL OR SMALL BUILDING REQUIREMENTS OF PART 9, NBCC 2015

THIS DESIGN COMPLIES WITH:
- PART 9 OF BCBC 2018 , NBC-2019AE
- PART 9 OF OBC 2012 (2019 AMENDMENT)
- CSA 086-14
- TPIC 2014

DESIGN ASSUMPTIONS
-OVERHANG NOT TO BE ALTERED OR CUT OFF.

(55 % OF 54.4 P.S.F. G.S.L. PLUS 8.4 P.S.F. RAIN LOAD) EQUALS 38.3 P.S.F. SPECIFIED ROOF LIVE LOAD

ALLOWABLE DEFL.(LL)= L/360 (0.19")
CALCULATED VERT. DEFL.(LL) = L/ 999 (0.00")
ALLOWABLE DEFL.(TL)= L/360 (0.19")
CALCULATED VERT. DEFL.(TL) = L/ 999 (0.00")

CSI: TC=0.18/1.00 (A-B:1) , BC=0.01/1.00 (D-E:4) , WB=0.00/1.00 (C-E:5) , SSI=0.11/1.00 (B-C:1)

DOL LUMBER=1.00 NAIL=1.00 LS BEND=1.10 COMP=1.10 SHEAR=1.10 TENS= 1.10

COMPANION LIVE LOAD FACTOR = 1.00

AUTOSOLVE RIGHT HEEL ONLY

TRUSS PLATE MANUFACTURER IS NOT RESPONSIBLE FOR QUALITY CONTROL IN THE TRUSS MANUFACTURING PLANT .

NAIL VALUES

PLATE	GRIP(DRY) (PSI) MAX	MIN	SHEAR (PLI) MAX	MIN	SECTION (PLI) MAX	MIN
MT20	650	371	1747	788	1987	1873

PLATE PLACEMENT TOL. = 0.250 inches

PLATE ROTATION TOL. = 5.0 Deg.

JSI GRIP= 0.16 (B) (INPUT = 0.90)
JSI METAL= 0.13 (B) (INPUT = 1.00)

JOB NAME	TRUSS NAME	QUANTITY	PLY	JOB DESC.	DRWG NO.
418651	G93	1	1	BAYVIEW WELLINGTON TRUSS DESC.	

Tamarack Roof Truss, Burlington

Version 8.630 S Aug 30 2023 MiTek Industries, Inc. Tue Nov 14 12:09:12 2023 Page 1
ID:BYtzLwPIX250w AVAQKI8lyZoeT-FG1rF69Z3tHYhb59M8UkWwfEAAvQUW6dK5zMkYyJHd5

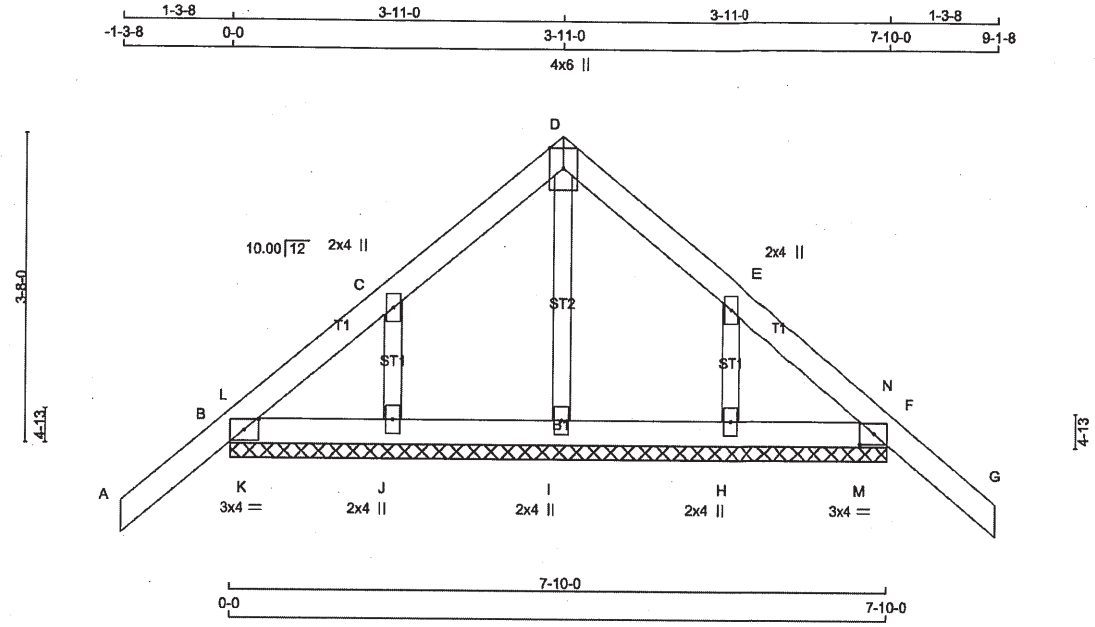

TOTAL WEIGHT = 30 lb
[M]

LUMBER
N. L. G. A. RULES

CHORDS	SIZE		LUMBER	DESCR.
A - D	2x4	DRY	No.2	SPF
D - G	2x4	DRY	No.2	SPF
B - F	2x4	DRY	No.2	SPF
ALL WEBS	2x3	DRY	No.2	SPF
ALL GABLE WEBS	2x3	DRY	No.2	SPF

DRY: SEASONED LUMBER.

GABLE STUDS SPACED AT 2-0-0 OC.

PLATES (table is in inches)

JT	TYPE	PLATES	W	LEN	Y	X
B	TMB1-I	MT20	3.0	4.0	1.50	2.00
C	TMW+w	MT20	2.0	4.0		
D	TTW+p	MT20	4.0	6.0	Edge	
E	TMW+w	MT20	2.0	4.0		
F	TMB1-I	MT20	3.0	4.0	1.50	2.00
H, I, J						
H	BMW1+w	MT20	2.0	4.0		

Edge - INDICATES REFERENCE CORNER OF PLATE TOUCHES EDGE OF CHORD.

NOTES-
1) Lateral braces to be a minimum of 2X4 SPF #2.

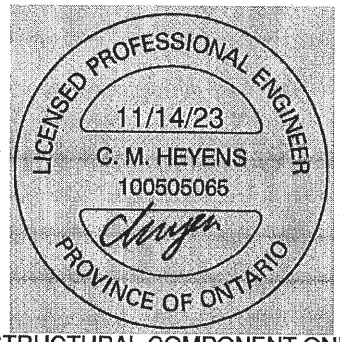

STRUCTURAL COMPONENT ONLY
DWG # TR23111103

DIMENSIONS, SUPPORTS AND LOADINGS SPECIFIED BY FABRICATOR TO BE VERIFIED BY BUILDING DESIGNER

BEARINGS

THIS TRUSS DESIGNED FOR CONTINUOUS BEARINGS.

THIS TRUSS REQUIRES RIGID SHEATHING ON EXPOSED FACE.

BEARING MATERIAL TO BE SPF NO.2 OR BETTER AT JOINT(S)

BRACING
TOP CHORD TO BE SHEATHED OR MAX. PURLIN SPACING = 6.25 FT.
MAX. UNBRACED BOTTOM CHORD LENGTH = 10.00 FT OR RIGID CEILING DIRECTLY APPLIED.

ALL PITCH BREAKS AND PERIMETER CORNER JOINTS MUST BE LATERALLY RESTRAINED.

LOADING
TOTAL LOAD CASES: (4)

CHORDS

MEMB. FR-TO	MAX. FACTORED FORCE (LBS)	FACTORED VERT. LOAD LC1 (PLF) FROM	TO	MAX CSI (LC)	MAX. UNBRAC LENGTH
A- B	0 / 56	-129.7	-129.7	0.18 (1)	10.00
B- L	-304 / 0	-129.7	-129.7	0.17 (1)	6.25
L- C	-46 / 0	-129.7	-129.7	0.06 (1)	6.25
C- D	-42 / 0	-129.7	-129.7	0.07 (1)	6.25
D- E	-42 / 0	-129.7	-129.7	0.07 (1)	6.25
E- N	-46 / 0	-129.7	-129.7	0.06 (1)	6.25
N- F	-304 / 0	-129.7	-129.7	0.17 (1)	6.25
F- G	0 / 56	-129.7	-129.7	0.18 (1)	10.00
B- K	0 / 36	-18.5	-18.5	0.07 (1)	10.00
K- J	0 / 36	-18.5	-18.5	0.07 (1)	10.00
J- I	0 / 21	-18.5	-18.5	0.02 (1)	10.00
I- H	0 / 21	-18.5	-18.5	0.02 (1)	10.00
H- M	0 / 36	-18.5	-18.5	0.07 (1)	10.00
M- F	0 / 36	-18.5	-18.5	0.07 (1)	10.00

WEBS

MEMB. FR-TO	MAX. FACTORED FORCE (LBS)	MAX CSI (LC)
I- D	-192 / 0	0.04 (1)
J- C	-251 / 0	0.04 (1)
H- E	-251 / 0	0.04 (1)
K- L	0 / 232	0.00 (1)
M- N	0 / 232	0.00 (1)

DESIGN CRITERIA

SPECIFIED LOADS:

TOP CH.	LL	=	38.3	PSF
	DL	=	6.0	PSF
BOT CH.	LL	=	0.0	PSF
	DL	=	7.4	PSF
TOTAL LOAD		=	51.6	PSF

SPACING = 24.0 IN. C/C

THIS TRUSS IS DESIGNED FOR RESIDENTIAL OR SMALL BUILDING REQUIREMENTS OF PART 9, NBCC 2015

THIS DESIGN COMPLIES WITH:
- PART 9 OF BCBC 2018 , NBC-2019AE
- PART 9 OF OBC 2012 (2019 AMENDMENT)
- CSA 086-14
- TPIC 2014

DESIGN ASSUMPTIONS
-OVERHANG NOT TO BE ALTERED OR CUT OFF.

(55 % OF 54.4 P.S.F. G.S.L. PLUS 8.4 P.S.F. RAIN LOAD) EQUALS 38.3 P.S.F. SPECIFIED ROOF LIVE LOAD

CSI: TC=0.18/1.00 (A-B:1) , BC=0.07/1.00 (B-K:1) , WB=0.04/1.00 (D-I:1) , SSI=0.19/1.00 (B-L:1)

DOL LUMBER=1.00 NAIL=1.00 LS BEND=1.10 COMP=1.10 SHEAR=1.10 TENS= 1.10

COMPANION LIVE LOAD FACTOR = 1.00

TRUSS PLATE MANUFACTURER IS NOT RESPONSIBLE FOR QUALITY CONTROL IN THE TRUSS MANUFACTURING PLANT .

NAIL VALUES

PLATE	GRIP(DRY) (PSI) MAX	MIN	SHEAR (PLI) MAX	MIN	SECTION (PLI) MAX	MIN
MT20	650	371	1747	788	1987	1873

PLATE PLACEMENT TOL. = 0.250 inches

PLATE ROTATION TOL. = 5.0 Deg.

JSI GRIP= 0.28 (B) (INPUT = 0.90)
JSI METAL= 0.13 (C) (INPUT = 1.00)

JOB NAME	TRUSS NAME	QUANTITY	PLY	JOB DESC.	DRWG NO.
418651	T93	2	1	BAYVIEW WELLINGTON TRUSS DESC.	

Tamarack Roof Truss, Burlington

Version 8.630 S Aug 30 2023 MiTek Industries, Inc. Tue Nov 14 12:09:34 2023 Page 1
ID:BYtzLwPIX250w AVAQKI8lyZoeT-cVM9tdQMte2RKznOfltuPZZ A2NNeTPsOWIWVHyJHc

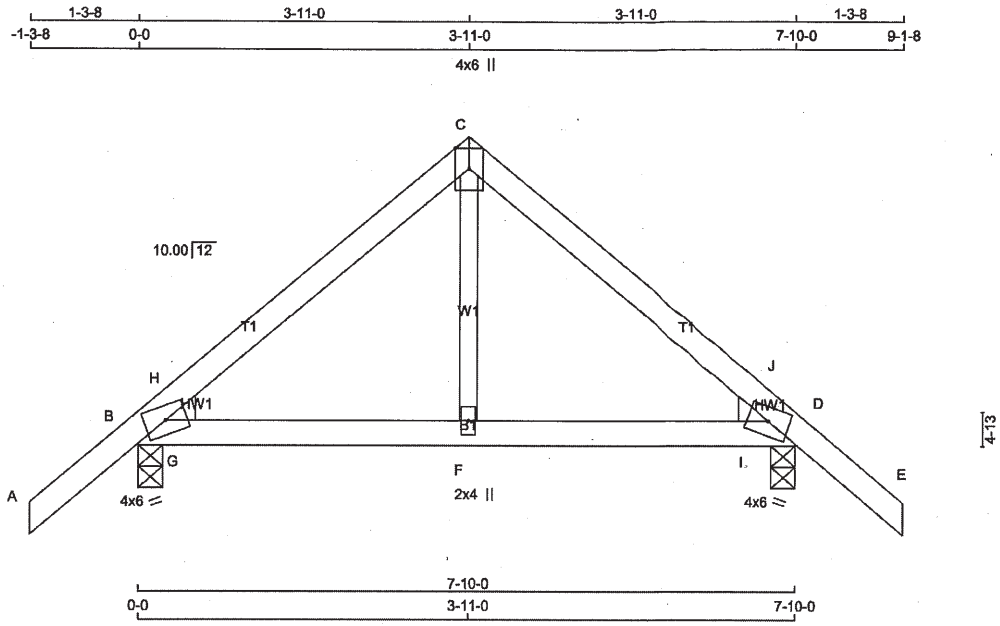

TOTAL WEIGHT = 2 X 28 = 56 lb

LUMBER
N. L. G. A. RULES

CHORDS	SIZE		LUMBER	DESCR.
A - C	2x4	DRY	No.2	SPF
C - E	2x4	DRY	No.2	SPF
B - D	2x4	DRY	No.2	SPF
ALL WEBS	2x3	DRY	No.2	SPF

DRY: SEASONED LUMBER.

PLATES (table is in inches)

JT	TYPE	PLATES	W	LEN	Y	X
B	TMBH1-m	MT20	4.0	6.0		
C	TTW+p	MT20	4.0	6.0	Edge	
D	TMBH1-m	MT20	4.0	6.0		
F	BMW+w	MT20	2.0	4.0		

Edge - INDICATES REFERENCE CORNER OF PLATE TOUCHES EDGE OF CHORD.

NOTES-
1) Lateral braces to be a minimum of 2X4 SPF #2.

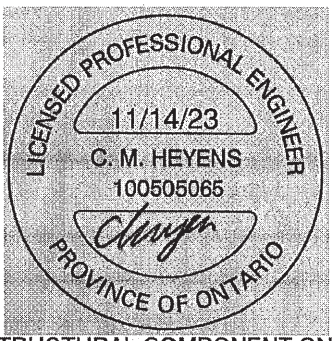

STRUCTURAL COMPONENT ONLY
DWG # TR23111119

DIMENSIONS, SUPPORTS AND LOADINGS SPECIFIED BY FABRICATOR TO BE VERIFIED BY BUILDING DESIGNER

BEARINGS

JT	FACTORED GROSS REACTION VERT	HORZ	MAXIMUM FACTORED GROSS REACTION DOWN	HORZ	UPLIFT	INPUT BRG IN-SX	REQRD BRG IN-SX	HEEL WEDGE
B	760	0	760	0	0	3-8	1-8	2x4 L
D	760	0	760	0	0	3-8	1-8	2x4 R

UNFACTORED REACTIONS

JT	1ST LCASE COMBINED	MAX./MIN. COMPONENT REACTIONS SNOW	LIVE	PERM.LIVE	WIND	DEAD	SOIL
B	527	405 / 0	0 / 0	0 / 0	0 / 0	122 / 0	0 / 0
D	527	405 / 0	0 / 0	0 / 0	0 / 0	122 / 0	0 / 0

BEARING MATERIAL TO BE SPF NO.2 OR BETTER AT JOINT(S) B, D

BRACING
TOP CHORD TO BE SHEATHED OR MAX. PURLIN SPACING = 6.25 FT.
MAX. UNBRACED BOTTOM CHORD LENGTH = 10.00 FT OR RIGID CEILING DIRECTLY APPLIED.

ALL PITCH BREAKS AND PERIMETER CORNER JOINTS MUST BE LATERALLY RESTRAINED.

LOADING
TOTAL LOAD CASES: (4)

CHORDS

MEMB. FR-TO	MAX. FACTORED FORCE (LBS)	FACTORED VERT. LOAD LC1 (PLF) FROM	TO	MAX CSI (LC)	MAX. UNBRAC LENGTH
A- B	0 / 56	-129.7	-129.7	0.18 (1)	10.00
B- H	-435 / 0	-129.7	-129.7	0.07 (1)	6.25
H- C	-501 / 0	-129.7	-129.7	0.21 (1)	6.25
C- J	-501 / 0	-129.7	-129.7	0.21 (1)	6.25
J- D	-435 / 0	-129.7	-129.7	0.07 (1)	6.25
D- E	0 / 56	-129.7	-129.7	0.18 (1)	10.00
B- G	0 / 376	-18.5	-18.5	0.27 (1)	10.00
G- F	0 / 376	-18.5	-18.5	0.27 (1)	10.00
F- I	0 / 376	-18.5	-18.5	0.27 (1)	10.00
I- D	0 / 376	-18.5	-18.5	0.27 (1)	10.00

WEBS

MEMB. FR-TO	MAX. FACTORED FORCE (LBS)	MAX CSI (LC)
F- C	0 / 221	0.05 (1)
G- H	-349 / 0	0.00 (1)
I- J	-349 / 0	0.00 (1)

[M][F]

DESIGN CRITERIA

SPECIFIED LOADS:

TOP CH.	LL	=	38.3	PSF
	DL	=	6.0	PSF
BOT CH.	LL	=	0.0	PSF
	DL	=	7.4	PSF
TOTAL LOAD		=	51.6	PSF

SPACING = 24.0 IN. C/C

THIS TRUSS IS DESIGNED FOR RESIDENTIAL OR SMALL BUILDING REQUIREMENTS OF PART 9, NBCC 2015

THIS DESIGN COMPLIES WITH:
- PART 9 OF BCBC 2018 , NBC-2019AE
- PART 9 OF OBC 2012 (2019 AMENDMENT)
- CSA 086-14
- TPIC 2014

(55 % OF 54.4 P.S.F. G.S.L. PLUS 8.4 P.S.F. RAIN LOAD) EQUALS 38.3 P.S.F. SPECIFIED ROOF LIVE LOAD

ALLOWABLE DEFL.(LL)= L/360 (0.26")
CALCULATED VERT. DEFL.(LL) = L/ 999 (0.02")
ALLOWABLE DEFL.(TL)= L/360 (0.26")
CALCULATED VERT. DEFL.(TL) = L/ 999 (0.03")

CSI: TC=0.21/1.00 (C-J:1) , BC=0.27/1.00 (F-I:1) , WB=0.05/1.00 (C-F:1) , SSI=0.24/1.00 (D-I:1)

DOL LUMBER=1.00 NAIL=1.00 LS BEND=1.10 COMP=1.10 SHEAR=1.10 TENS= 1.10

COMPANION LIVE LOAD FACTOR = 1.00

TRUSS PLATE MANUFACTURER IS NOT RESPONSIBLE FOR QUALITY CONTROL IN THE TRUSS MANUFACTURING PLANT .

NAIL VALUES

PLATE	GRIP(DRY) (PSI) MAX	MIN	SHEAR (PLI) MAX	MIN	SECTION (PLI) MAX	MIN
MT20	650	371	1747	788	1987	1873

PLATE PLACEMENT TOL. = 0.250 inches

PLATE ROTATION TOL. = 5.0 Deg.

JSI GRIP= 0.26 (D) (INPUT = 0.90)
JSI METAL= 0.15 (D) (INPUT = 1.00)

JOB NAME	TRUSS NAME	QUANTITY	PLY	JOB DESC.	DRWG NO.
418651	T93A	2	1	BAYVIEW WELLINGTON TRUSS DESC.	

Tamarack Roof Truss, Burlington

Version 8.630 S Aug 30 2023 MiTek Industries, Inc. Tue Nov 14 12:09:35 2023 Page 1
ID:BYtzLwPIX250w AVAQKl8IyZoeT-4hwX4zQ?eyAHy7MaDTO7yn69mRfcNv30dA241jyJHck

Scale = 1:26.2

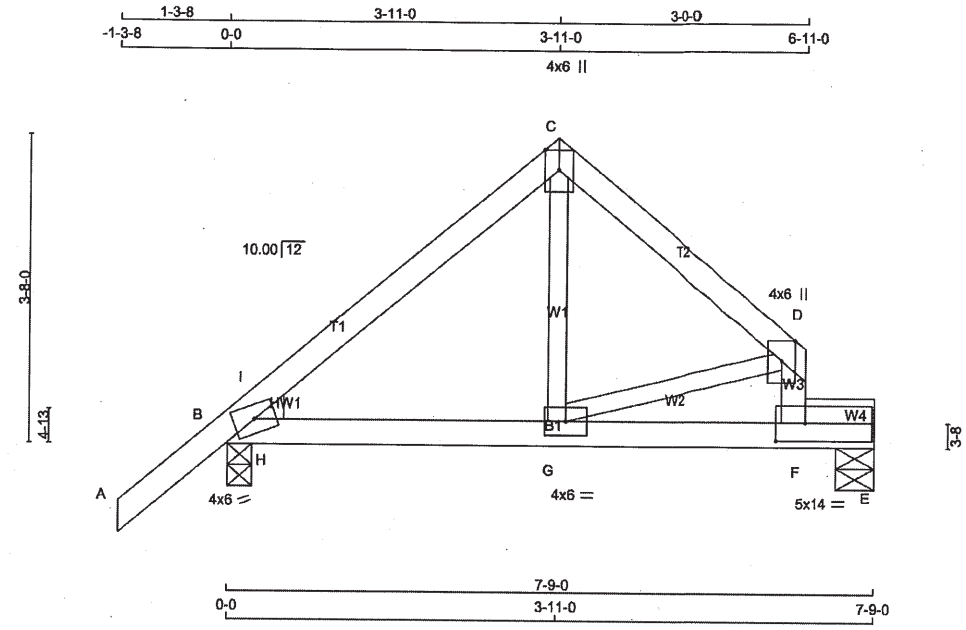

TOTAL WEIGHT = 2 X 28 = 57 lb [M]

LUMBER
N. L. G. A. RULES

CHORDS	SIZE		LUMBER	DESCR.
A - C	2x4	DRY	No.2	SPF
C - D	2x4	DRY	No.2	SPF
F - D	2x4	DRY	No.2	SPF
B - E	2x4	DRY	No.2	SPF
F - E	2x4	DRY	No.2	SPF
ALL WEBS EXCEPT	2x3	DRY	No.2	SPF

DRY: SEASONED LUMBER.

PLATES (table is in inches)

JT	TYPE	PLATES	W	LEN	Y	X
B	TMBH1-m	MT20	4.0	6.0		
C	TTW+p	MT20	4.0	6.0	Edge	
D	TMVW+p	MT20	4.0	6.0	Edge	
F	BMVW-t	MT20	5.0	14.0	2.50	4.25
G	BMWW-t	MT20	4.0	6.0		

Edge - INDICATES REFERENCE CORNER OF PLATE TOUCHES EDGE OF CHORD.

NOTES-
1) Lateral braces to be a minimum of 2X4 SPF #2.

LICENSED PROFESSIONAL ENGINEER
11/14/23
C. M. HEYENS
100505065
PROVINCE OF ONTARIO

STRUCTURAL COMPONENT ONLY
DWG # TR23111120

DIMENSIONS, SUPPORTS AND LOADINGS SPECIFIED BY FABRICATOR TO BE VERIFIED BY BUILDING DESIGNER

BEARINGS

JT	FACTORED GROSS REACTION VERT	HORZ	MAXIMUM FACTORED GROSS REACTION DOWN	HORZ	UPLIFT	INPUT BRG IN-SX	REQRD BRG IN-SX	HEEL WEDGE
B	748	0	748	0	0	3-8	1-8	2x4 L
E	472	0	472	0	0	5-8	1-8	

UNFACTORED REACTIONS

JT	1ST LCASE COMBINED	MAX./MIN. COMPONENT REACTIONS SNOW	LIVE	PERM.LIVE	WIND	DEAD	SOIL
B	519	399 / 0	0 / 0	0 / 0	0 / 0	120 / 0	0 / 0
E	330	236 / 0	0 / 0	0 / 0	0 / 0	94 / 0	0 / 0

BEARING MATERIAL TO BE SPF NO.2 OR BETTER AT JOINT(S) B, E

BRACING
TOP CHORD TO BE SHEATHED OR MAX. PURLIN SPACING = 6.25 FT.
MAX. UNBRACED BOTTOM CHORD LENGTH = 10.00 FT OR RIGID CEILING DIRECTLY APPLIED.

ALL PITCH BREAKS AND PERIMETER CORNER JOINTS MUST BE LATERALLY RESTRAINED..

LOADING
TOTAL LOAD CASES: (4)

CHORDS

MEMB. FR-TO	MAX. FACTORED FORCE (LBS)	FACTORED VERT. LOAD LC1 (PLF) FROM	TO	MAX CSI (LC)	MAX. UNBRAC LENGTH
A- B	0 / 56	-129.7	-129.7	0.18 (1)	10.00
B- I	-419 / 0	-129.7	-129.7	0.10 (1)	6.25
I- C	-501 / 0	-129.7	-129.7	0.22 (1)	6.25
C- D	-487 / 0	-129.7	-129.7	0.20 (1)	6.25
F- D	-610 / 0	0.0	0.0	0.06 (1)	7.81
B- H	0 / 374	-18.5	-18.5	0.28 (1)	10.00
H- G	0 / 374	-18.5	-18.5	0.28 (1)	10.00
G- F	0 / 0	-18.5	-18.5	0.53 (1)	10.00
F- E	0 / 0	-18.5	-18.5	0.22 (1)	10.00

WEBS

MEMB. FR-TO	MAX. FACTORED FORCE (LBS)	MAX CSI (LC)
G- C	0 / 229	0.05 (1)
G- D	0 / 388	0.09 (1)
H- I	-371 / 0	0.00 (1)

DESIGN CRITERIA

SPECIFIED LOADS:

TOP CH.	LL	=	38.3	PSF
	DL	=	6.0	PSF
BOT CH.	LL	=	0.0	PSF
	DL	=	7.4	PSF
TOTAL LOAD		=	51.6	PSF

SPACING = 24.0 IN. C/C

THIS TRUSS IS DESIGNED FOR RESIDENTIAL OR SMALL BUILDING REQUIREMENTS OF PART 9, NBCC 2015

THIS DESIGN COMPLIES WITH:
- PART 9 OF BCBC 2018 , NBC-2019AE
- PART 9 OF OBC 2012 (2019 AMENDMENT)
- CSA 086-14
- TPIC 2014

(55 % OF 54.4 P.S.F. G.S.L. PLUS 8.4 P.S.F. RAIN LOAD) EQUALS 38.3 P.S.F. SPECIFIED ROOF LIVE LOAD

ALLOWABLE DEFL.(LL)= L/360 (0.26")
CALCULATED VERT. DEFL.(LL) = L/ 999 (0.05")
ALLOWABLE DEFL.(TL)= L/360 (0.26")
CALCULATED VERT. DEFL.(TL) = L/ 999 (0.08")

CSI: TC=0.22/1.00 (C-I:1) , BC=0.53/1.00 (F-G:1) , WB=0.09/1.00 (D-G:1) , SSI=0.25/1.00 (B-H:1)

DOL LUMBER=1.00 NAIL=1.00 LS BEND=1.10 COMP=1.10 SHEAR=1.10 TENS= 1.10

COMPANION LIVE LOAD FACTOR = 1.00

TRUSS PLATE MANUFACTURER IS NOT RESPONSIBLE FOR QUALITY CONTROL IN THE TRUSS MANUFACTURING PLANT .

NAIL VALUES

PLATE	GRIP(DRY) (PSI) MAX	MIN	SHEAR (PLI) MAX	MIN	SECTION (PLI) MAX	MIN
MT20	650	371	1747	788	1987	1873

PLATE PLACEMENT TOL. = 0.250 inches

PLATE ROTATION TOL. = 5.0 Deg.

JSI GRIP= 0.38 (D) (INPUT = 0.90)
JSI METAL= 0.25 (D) (INPUT = 1.00)

JOB NAME	TRUSS NAME	QUANTITY	PLY	JOB DESC.	DRWG NO.
418649	P1	1	1	BAYVIEW WELLINGTON TRUSS DESC.	

Tamarack Roof Truss, Burlington

Version 8.630 S Aug 30 2023 MiTek Industries, Inc. Tue Nov 14 11:14:35 2023 Page 1
ID:UaoF4umx8QMX1bo7Q0Zg7Cya5EO-iqW?UbV0o1PW2_4LuPBGCtR3CBTZAPHHnlfSD_yJIQI

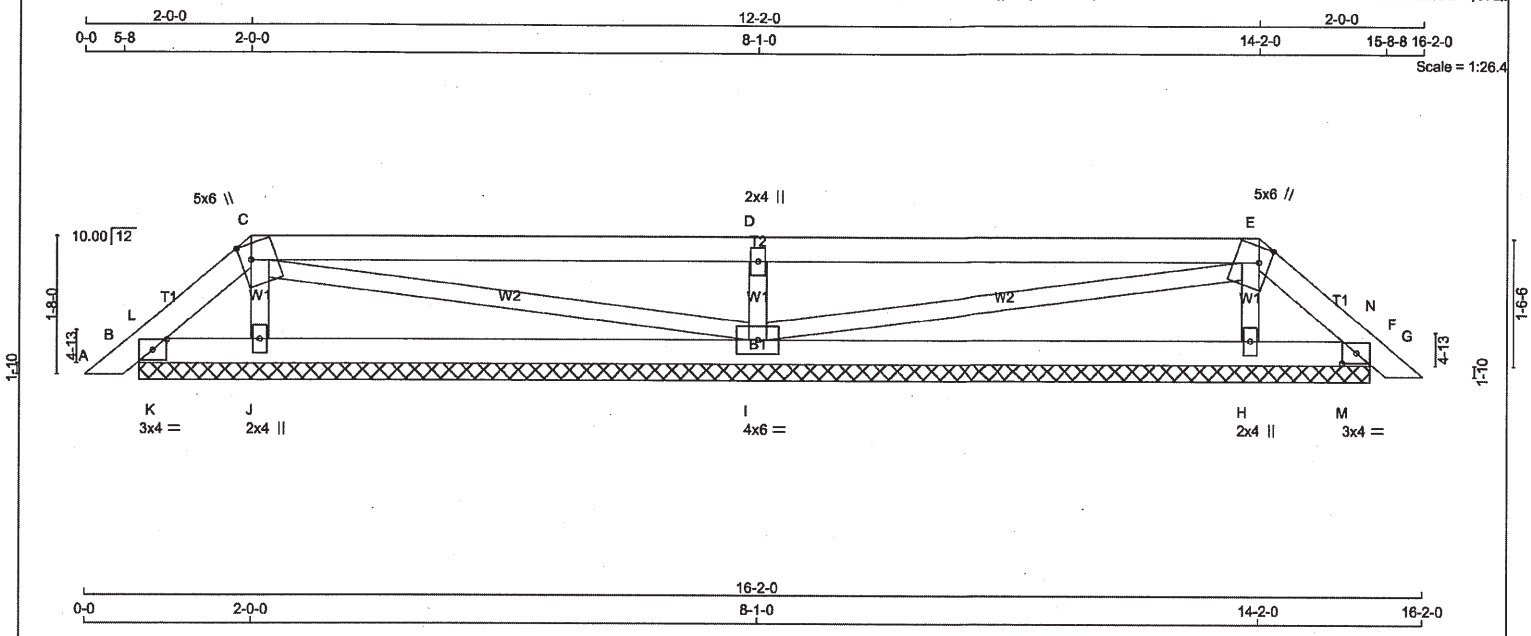

TOTAL WEIGHT = 49 lb

LUMBER
N. L. G. A. RULES

CHORDS	SIZE		LUMBER	DESCR.
A - C	2x4	DRY	No.2	SPF
C - E	2x4	DRY	No.2	SPF
E - G	2x4	DRY	No.2	SPF
B - F	2x4	DRY	No.2	SPF
ALL WEBS	2x3	DRY	No.2	SPF

DRY: SEASONED LUMBER.

PLATES (table is in inches)

JT	TYPE	PLATES	W	LEN	Y	X
B	TMB1-I	MT20	3.0	4.0	1.50	2.00
C	TTWW+m	MT20	5.0	6.0	2.25	1.50
D	TMW+w	MT20	2.0	4.0		
E	TTWW+m	MT20	5.0	6.0	2.25	1.50
F	TMB1-I	MT20	3.0	4.0	1.50	2.00
H	BMW1+w	MT20	2.0	4.0		
I	BMWWW1-t	MT20	4.0	6.0		
J	BMW1+w	MT20	2.0	4.0		

NOTES-
1) Lateral braces to be a minimum of 2X4 SPF #2.

LICENSED PROFESSIONAL ENGINEER
11/14/23
C. M. HEYENS
100505065
PROVINCE OF ONTARIO

STRUCTURAL COMPONENT ONLY
DWG # TR23111067

DIMENSIONS, SUPPORTS AND LOADINGS SPECIFIED BY FABRICATOR TO BE VERIFIED BY BUILDING DESIGNER

BEARINGS

JT	FACTORED GROSS REACTION VERT	HORZ	MAXIMUM FACTORED GROSS REACTION DOWN	HORZ	UPLIFT	INPUT BRG IN-SX	REQRD BRG IN-SX
B	191	0	191	0	0	14-10-9	1-8
F	191	0	191	0	0	14-10-9	1-8
J	429	0	429	0	0	14-10-9	1-8
I	1108	0	1108	0	0	14-10-9	1-8
H	429	0	429	0	0	14-10-9	1-8

UNFACTORED REACTIONS

JT	1ST LCASE COMBINED	MAX./MIN. COMPONENT REACTIONS SNOW	LIVE	PERM.LIVE	WIND	DEAD	SOIL
B	128	123 / 0	0 / 0	0 / 0	0 / 0	4 / 0	0 / 0
F	128	123 / 0	0 / 0	0 / 0	0 / 0	4 / 0	0 / 0
J	305	195 / 0	0 / 0	0 / 0	0 / 0	109 / 0	0 / 0
I	769	585 / 0	0 / 0	0 / 0	0 / 0	184 / 0	0 / 0
H	305	195 / 0	0 / 0	0 / 0	0 / 0	109 / 0	0 / 0

BEARING MATERIAL TO BE SPF NO.2 OR BETTER AT JOINT(S) B, F, J, I, H

BRACING
TOP CHORD TO BE SHEATHED OR MAX. PURLIN SPACING = 6.25 FT.
MAX. UNBRACED BOTTOM CHORD LENGTH = 10.00 FT OR RIGID CEILING DIRECTLY APPLIED.

ALL PITCH BREAKS AND PERIMETER CORNER JOINTS MUST BE LATERALLY RESTRAINED.

LOADING
TOTAL LOAD CASES: (4)

CHORDS

MEMB. FR-TO	MAX. FACTORED FORCE (LBS)	FACTORED VERT. LOAD (PLF) FROM	TO	LC1 MAX CSI (LC)	MAX. UNBRAC LENGTH
A- B	0 / 21	-129.7	-129.7	0.03 (1)	10.00
B- L	-39 / 24	-129.7	-129.7	0.03 (4)	6.25
L- C	-78 / 0	-129.7	-129.7	0.02 (4)	6.25
C- D	-10 / 0	-129.7	-129.7	0.82 (1)	10.00
D- E	-10 / 0	-129.7	-129.7	0.82 (1)	10.00
E- N	-78 / 0	-129.7	-129.7	0.02 (4)	6.25
N- F	-39 / 24	-129.7	-129.7	0.03 (4)	6.25
F- G	0 / 21	-129.7	-129.7	0.03 (1)	10.00
B- K	0 / 54	-18.5	-18.5	0.04 (1)	10.00
K- J	0 / 54	-18.5	-18.5	0.10 (4)	10.00
J- I	0 / 27	-18.5	-18.5	0.14 (4)	10.00
I- H	0 / 27	-18.5	-18.5	0.14 (4)	10.00
H- M	0 / 54	-18.5	-18.5	0.10 (4)	10.00
M- F	0 / 54	-18.5	-18.5	0.04 (1)	10.00

WEBS

MEMB. FR-TO	MAX. FACTORED FORCE (LBS)	MAX CSI (LC)
J- C	-308 / 0	0.04 (1)
C- I	-18 / 0	0.01 (1)
I- D	-986 / 0	0.14 (1)
I- E	-18 / 0	0.01 (1)
H- E	-308 / 0	0.04 (1)
K- L	-142 / 0	0.00 (1)
M- N	-142 / 0	0.00 (1)

DESIGN CRITERIA

SPECIFIED LOADS:

TOP CH.	LL	=	38.3	PSF
	DL	=	6.0	PSF
BOT CH.	LL	=	0.0	PSF
	DL	=	7.4	PSF
TOTAL LOAD		=	51.6	PSF

SPACING = 24.0 IN. C/C

LOADING IN FLAT SECTION BASED ON A SLOPE OF 6.00/12

THIS TRUSS IS DESIGNED FOR RESIDENTIAL OR SMALL BUILDING REQUIREMENTS OF PART 9, NBCC 2015

THIS DESIGN COMPLIES WITH:
- PART 9 OF BCBC 2018 , NBC-2019AE
- PART 9 OF OBC 2012 (2019 AMENDMENT)
- CSA 086-14
- TPIC 2014

(55 % OF 54.4 P.S.F. G.S.L. PLUS 8.4 P.S.F. RAIN LOAD) EQUALS 38.3 P.S.F. SPECIFIED ROOF LIVE LOAD

CSI: TC=0.82/1.00 (C-D:1) , BC=0.14/1.00 (H-I:4) , WB=0.14/1.00 (D-I:1) , SSI=0.38/1.00 (C-D:1)

DOL LUMBER=1.00 NAIL=1.00 LS BEND=1.10 COMP=1.10 SHEAR=1.10 TENS= 1.10

COMPANION LIVE LOAD FACTOR = 1.00

TRUSS PLATE MANUFACTURER IS NOT RESPONSIBLE FOR QUALITY CONTROL IN THE TRUSS MANUFACTURING PLANT .

NAIL VALUES

PLATE	GRIP(DRY) (PSI) MAX	MIN	SHEAR (PLI) MAX	MIN	SECTION (PLI) MAX	MIN
MT20	650	371	1747	788	1987	1873

PLATE PLACEMENT TOL. = 0.250 inches

PLATE ROTATION TOL. = 5.0 Deg.

JSI GRIP= 0.49 (D) (INPUT = 0.90)
JSI METAL= 0.21 (D) (INPUT = 1.00)

JOB NAME	TRUSS NAME	QUANTITY	PLY	JOB DESC.	DRWG NO.
418649	P2	1	1	BAYVIEW WELLINGTON TRUSS DESC.	

Tamarack Roof Truss, Burlington

Version 8.630 S Aug 30 2023 MiTek Industries, Inc. Tue Nov 14 11:14:36 2023 Page 1
ID:UaoF4umx8QMX1bo7Q0Zq7Cya5EO-A04NixVeZKXNg8fYS6iVk4zL_boSvsoQ0PP?lRyJIQH

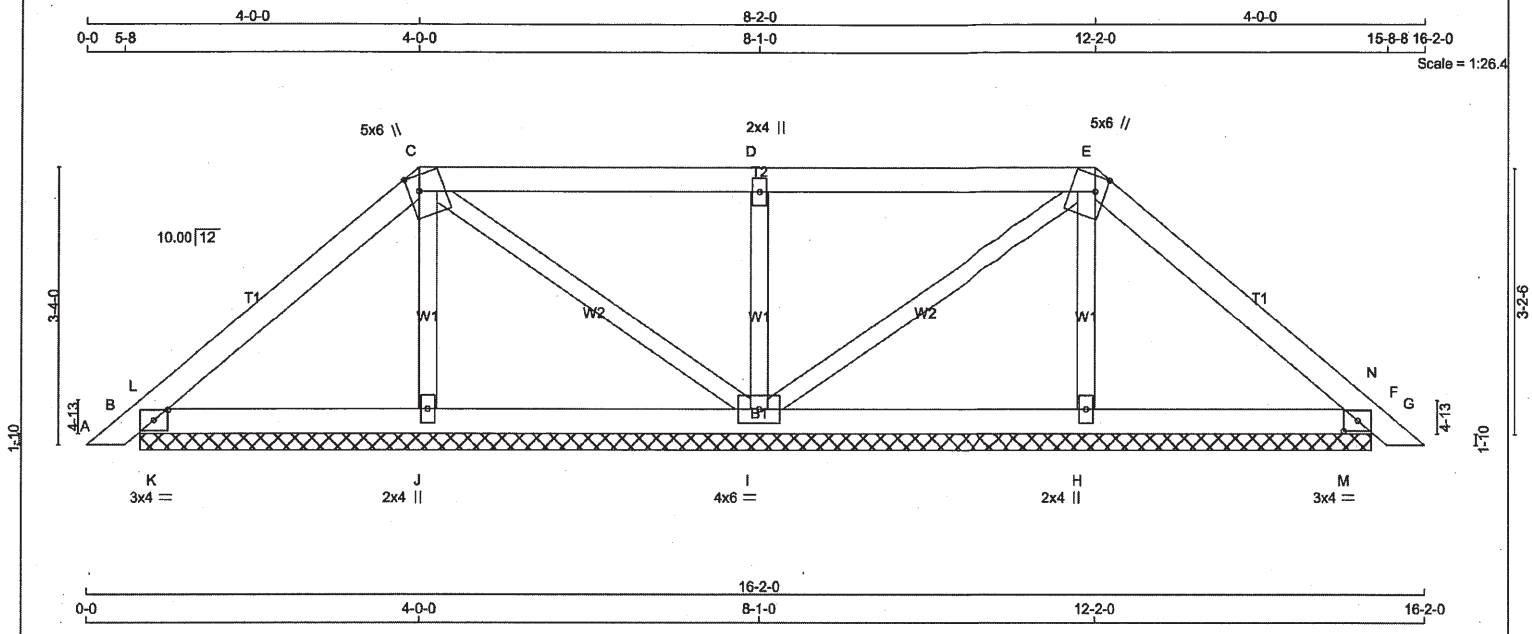

TOTAL WEIGHT = 52 lb

LUMBER

N. L. G. A. RULES

CHORDS	SIZE		LUMBER	DESCR.
A - C	2x4	DRY	No.2	SPF
C - E	2x4	DRY	No.2	SPF
E - G	2x4	DRY	No.2	SPF
B - F	2x4	DRY	No.2	SPF
ALL WEBS	2x3	DRY	No.2	SPF

DRY: SEASONED LUMBER.

PLATES (table is in inches)

JT	TYPE	PLATES	W	LEN	Y	X
B	TMB1-I	MT20	3.0	4.0	1.50	2.00
C	TTWW+m	MT20	5.0	6.0	2.25	1.50
D	TMW+w	MT20	2.0	4.0		
E	TTWW+m	MT20	5.0	6.0	2.25	1.50
F	TMB1-I	MT20	3.0	4.0	1.50	2.00
H	BMW1+w	MT20	2.0	4.0		
I	BMWWW1-t	MT20	4.0	6.0		
J	BMW1+w	MT20	2.0	4.0		

NOTES-

1) Lateral braces to be a minimum of 2X4 SPF #2.

LICENSED PROFESSIONAL ENGINEER
11/14/23
C. M. HEYENS
100505065
PROVINCE OF ONTARIO

STRUCTURAL COMPONENT ONLY
DWG # TR23111068

DIMENSIONS, SUPPORTS AND LOADINGS SPECIFIED BY FABRICATOR TO BE VERIFIED BY BUILDING DESIGNER

BEARINGS

JT	FACTORED GROSS REACTION VERT	HORZ	MAXIMUM FACTORED GROSS REACTION DOWN	HORZ	UPLIFT	INPUT BRG IN-SX	REQRD BRG IN-SX
B	404	0	404	0	0	14-10-9	1-8
F	404	0	404	0	0	14-10-9	1-8
J	362	0	362	0	0	14-10-9	1-8
I	815	0	815	0	0	14-10-9	1-8
H	362	0	362	0	0	14-10-9	1-8

UNFACTORED REACTIONS

JT	1ST LCASE COMBINED	MAX./MIN. COMPONENT REACTIONS SNOW	LIVE	PERM.LIVE	WIND	DEAD	SOIL
B	279	222 / 0	0 / 0	0 / 0	0 / 0	58 / 0	0 / 0
F	279	222 / 0	0 / 0	0 / 0	0 / 0	58 / 0	0 / 0
J	256	171 / 0	0 / 0	0 / 0	0 / 0	84 / 0	0 / 0
I	564	436 / 0	0 / 0	0 / 0	0 / 0	128 / 0	0 / 0
H	256	171 / 0	0 / 0	0 / 0	0 / 0	84 / 0	0 / 0

BEARING MATERIAL TO BE SPF NO.2 OR BETTER AT JOINT(S) B, F, J, I, H

BRACING

TOP CHORD TO BE SHEATHED OR MAX. PURLIN SPACING = 6.25 FT.
MAX. UNBRACED BOTTOM CHORD LENGTH = 10.00 FT OR RIGID CEILING DIRECTLY APPLIED.

ALL PITCH BREAKS AND PERIMETER CORNER JOINTS MUST BE LATERALLY RESTRAINED.

LOADING

TOTAL LOAD CASES: (4)

CHORDS

MEMB. FR-TO	MAX. FACTORED FORCE (LBS)	FACTORED VERT. LOAD LC1 (PLF) FROM	TO	MAX CSI (LC)	MAX. UNBRAC LENGTH
A- B	0 / 21	-129.7	-129.7	0.03 (1)	10.00
B- L	-25 / 16	-129.7	-129.7	0.09 (1)	6.25
L- C	-162 / 0	-129.7	-129.7	0.18 (1)	6.25
C- D	-32 / 0	-129.7	-129.7	0.37 (1)	6.25
D- E	-32 / 0	-129.7	-129.7	0.37 (1)	6.25
E- N	-162 / 0	-129.7	-129.7	0.18 (1)	6.25
N- F	-25 / 16	-129.7	-129.7	0.09 (1)	6.25
F- G	0 / 21	-129.7	-129.7	0.03 (1)	10.00
B- K	0 / 115	-18.5	-18.5	0.16 (1)	10.00
K- J	0 / 115	-18.5	-18.5	0.16 (1)	10.00
J- I	0 / 106	-18.5	-18.5	0.09 (1)	10.00
I- H	0 / 106	-18.5	-18.5	0.09 (1)	10.00
H- M	0 / 115	-18.5	-18.5	0.16 (1)	10.00
M- F	0 / 115	-18.5	-18.5	0.16 (1)	10.00

WEBS

MEMB. FR-TO	MAX. FACTORED FORCE (LBS)	MAX CSI (LC)
J- C	-233 / 0	0.04 (1)
C- I	-90 / 0	0.04 (1)
I- D	-661 / 0	0.12 (1)
I- E	-90 / 0	0.04 (1)
H- E	-233 / 0	0.04 (1)
K- L	-459 / 0	0.00 (1)
M- N	-459 / 0	0.00 (1)

DESIGN CRITERIA

SPECIFIED LOADS:

TOP CH.	LL	=	38.3	PSF
	DL	=	6.0	PSF
BOT CH.	LL	=	0.0	PSF
	DL	=	7.4	PSF
TOTAL LOAD		=	51.6	PSF

SPACING = 24.0 IN. C/C

LOADING IN FLAT SECTION BASED ON A SLOPE OF 6.00/12

THIS TRUSS IS DESIGNED FOR RESIDENTIAL OR SMALL BUILDING REQUIREMENTS OF PART 9, NBCC 2015

THIS DESIGN COMPLIES WITH:
- PART 9 OF BCBC 2018 , NBC-2019AE
- PART 9 OF OBC 2012 (2019 AMENDMENT)
- CSA 086-14
- TPIC 2014

(55 % OF 54.4 P.S.F. G.S.L. PLUS 8.4 P.S.F. RAIN LOAD) EQUALS 38.3 P.S.F. SPECIFIED ROOF LIVE LOAD

CSI: TC=0.37/1.00 (D-E:1) , BC=0.16/1.00 (H-M:1) , WB=0.12/1.00 (D-I:1) , SSI=0.35/1.00 (B-K:1)

DOL LUMBER=1.00 NAIL=1.00 LS BEND=1.10 COMP=1.10 SHEAR=1.10 TENS= 1.10

COMPANION LIVE LOAD FACTOR = 1.00

TRUSS PLATE MANUFACTURER IS NOT RESPONSIBLE FOR QUALITY CONTROL IN THE TRUSS MANUFACTURING PLANT .

NAIL VALUES

PLATE	GRIP(DRY) (PSI) MAX	MIN	SHEAR (PLI) MAX	MIN	SECTION (PLI) MAX	MIN
MT20	650	371	1747	788	1987	1873

PLATE PLACEMENT TOL. = 0.250 inches

PLATE ROTATION TOL. = 5.0 Deg.

JSI GRIP= 0.34 (B) (INPUT = 0.90)
JSI METAL= 0.14 (D) (INPUT = 1.00)

JOB NAME	TRUSS NAME	QUANTITY	PLY	JOB DESC.	DRWG NO.
418649	P3	1	3	BAYVIEW WELLINGTON TRUSS DESC.	

Tamarack Roof Truss, Burlington

Version 8.630 S Aug 30 2023 MiTek Industries, Inc. Tue Nov 14 11:14:37 2023 Page 1
ID:UaoF4umx8QMX1bo7Q0Zg7Cya5EO-eDelvGWHKefEHIEk0qDkHIWXP?9neKLaF38ZltyJIQG

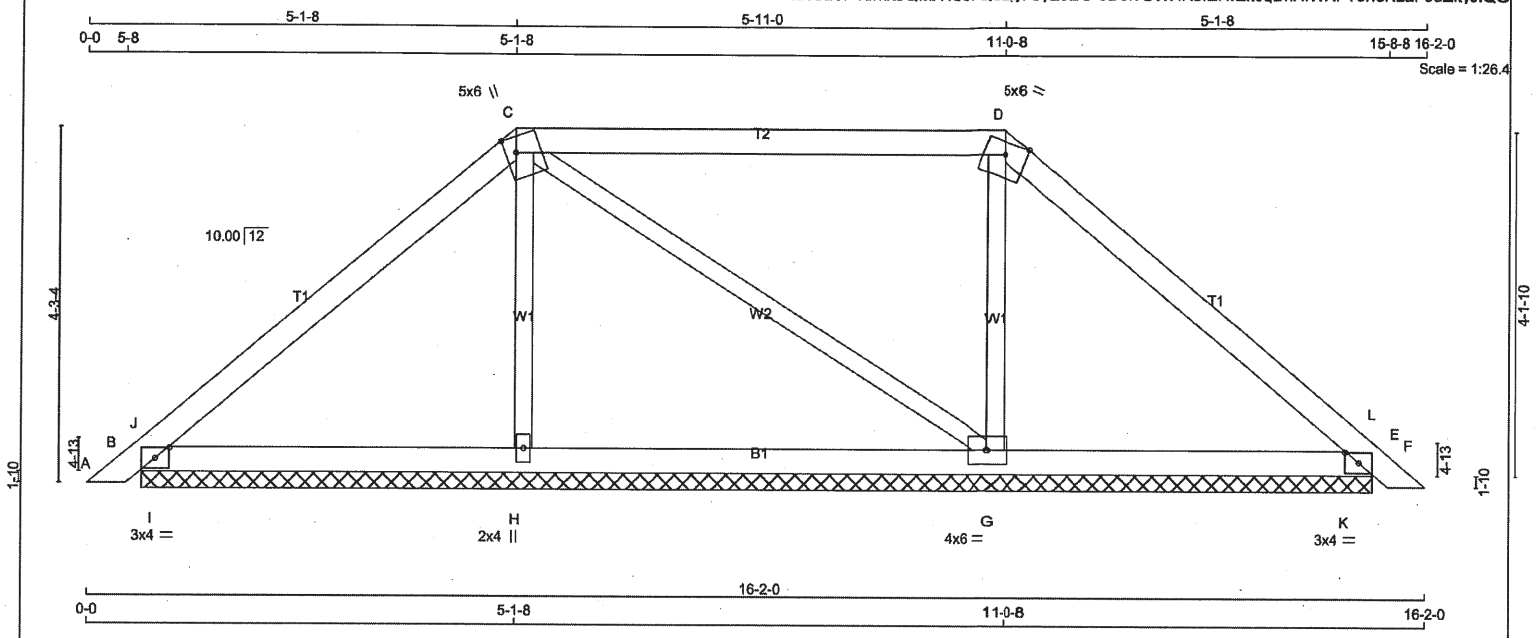

TOTAL WEIGHT = 3 X 50 = 150 lb

LUMBER

N. L. G. A. RULES

CHORDS	SIZE		LUMBER	DESCR.
A - C	2x4	DRY	No.2	SPF
C - D	2x4	DRY	No.2	SPF
D - F	2x4	DRY	No.2	SPF
B - E	2x4	DRY	No.2	SPF
ALL WEBS	2x3	DRY	No.2	SPF

DRY: SEASONED LUMBER.

DESIGN CONSISTS OF 3 TRUSSES BUILT SEPARATELY THEN FASTENED TOGETHER AS FOLLOWS:

CHORDS	#ROWS	SURFACE SPACING (IN)	LOAD(PLF)
TOP CHORDS : (0.122"X3") SPIRAL NAILS			
A- C	1	12	TOP
C- D	1	12	TOP
D- F	1	12	TOP
BOTTOM CHORDS : (0.122"X3") SPIRAL NAILS			
B- E	1	12	TOP
WEBS : (0.122"X3") SPIRAL NAILS			
2x3	1	6	

STAGGER NAILS BY HALF THE SURFACE SPACING IN ADJACENT PLIES.

TOP - COMPONENTS ARE LOADED FROM THE TOP AND MUST BE PLACED ON TOP EDGE OF ALL PLIES FOR THE LOAD TO BE TRANSFERRED TO EACH PLY.

PLATES (table is in inches)

JT	TYPE	PLATES	W	LEN	Y	X
B	TMB1-I	MT20	3.0	4.0	1.50	2.00
C	TTWW+m	MT20	5.0	6.0	2.25	1.50
D	TTW-m	MT20	5.0	6.0	Edge	
E	TMB1-I	MT20	3.0	4.0	1.50	2.00
G	BMWW1-t	MT20	4.0	6.0		
H	BMW1+w	MT20	2.0	4.0		

Edge - INDICATES REFERENCE CORNER OF PLATE TOUCHES EDGE OF CHORD.

NOTES-

1) Lateral braces to be a minimum of 2X4 SPF #2.

LICENSED PROFESSIONAL ENGINEER
11/14/23
C. M. HEYENS
100505065
PROVINCE OF ONTARIO

STRUCTURAL COMPONENT ONLY
DWG # TR23111069

DIMENSIONS, SUPPORTS AND LOADINGS SPECIFIED BY FABRICATOR TO BE VERIFIED BY BUILDING DESIGNER

BEARINGS

JT	FACTORED GROSS REACTION VERT	HORZ	MAXIMUM FACTORED GROSS REACTION DOWN	HORZ	UPLIFT	INPUT BRG IN-SX	REQRD BRG IN-SX
B	597	0	597	0	0	14-10-9	1-8
E	556	0	556	0	0	14-10-9	1-8
H	543	0	543	0	0	14-10-9	1-8
G	652	0	652	0	0	14-10-9	1-8

UNFACTORED REACTIONS

JT	1ST LCASE COMBINED	MAX./MIN. COMPONENT REACTIONS SNOW	LIVE	PERM.LIVE	WIND	DEAD	SOIL
B	412	330 / 0	0 / 0	0 / 0	0 / 0	82 / 0	0 / 0
E	384	305 / 0	0 / 0	0 / 0	0 / 0	79 / 0	0 / 0
H	382	262 / 0	0 / 0	0 / 0	0 / 0	121 / 0	0 / 0
G	456	326 / 0	0 / 0	0 / 0	0 / 0	130 / 0	0 / 0

BEARING MATERIAL TO BE SPF NO.2 OR BETTER AT JOINT(S) B, E, H, G

BRACING

TOP CHORD TO BE SHEATHED OR MAX. PURLIN SPACING = 6.25 FT.
MAX. UNBRACED BOTTOM CHORD LENGTH = 10.00 FT OR RIGID CEILING DIRECTLY APPLIED.

ALL PITCH BREAKS AND PERIMETER CORNER JOINTS MUST BE LATERALLY RESTRAINED.

LOADING

TOTAL LOAD CASES: (4)

CHORDS

MEMB. FR-TO	MAX. FACTORED FORCE (LBS)	FACTORED VERT. LOAD LC1 (PLF) FROM	TO	MAX CSI (LC)	MAX. UNBRAC LENGTH
A- B	0 / 21	-129.7	-129.7	0.01 (1)	10.00
B- J	-43 / 5	-129.7	-129.7	0.06 (1)	6.25
J- C	-340 / 0	-129.7	-129.7	0.11 (1)	6.25
C- D	-185 / 0	-129.7	-129.7	0.26 (1)	6.25
D- L	-276 / 0	-129.7	-129.7	0.11 (1)	6.25
L- E	-34 / 75	-129.7	-129.7	0.06 (1)	6.25
E- F	0 / 21	-129.7	-129.7	0.01 (1)	10.00
B- I	0 / 246	-18.5	-18.5	0.09 (1)	10.00
I- H	0 / 246	-18.5	-18.5	0.09 (1)	10.00
H- G	0 / 235	-18.5	-18.5	0.05 (1)	10.00
G- K	0 / 197	-18.5	-18.5	0.09 (1)	10.00
K- E	0 / 197	-18.5	-18.5	0.09 (1)	10.00

WEBS

MEMB. FR-TO	MAX. FACTORED FORCE (LBS)	MAX CSI (LC)
H- C	-390 / 0	0.03 (1)
C- G	-61 / 0	0.02 (1)
G- D	-465 / 0	0.04 (1)
I- J	-757 / 0	0.00 (1)
K- L	-765 / 0	0.00 (1)

DESIGN CRITERIA

SPECIFIED LOADS:

TOP CH.	LL	=	38.3	PSF
	DL	=	6.0	PSF
BOT CH.	LL	=	0.0	PSF
	DL	=	7.4	PSF
TOTAL LOAD		=	51.6	PSF

SPACING = 24.0 IN. C/C

LOADING IN FLAT SECTION BASED ON A SLOPE OF 6.00/12

THIS TRUSS IS DESIGNED FOR RESIDENTIAL OR SMALL BUILDING REQUIREMENTS OF PART 9, NBCC 2015

THIS DESIGN COMPLIES WITH:
- PART 9 OF BCBC 2018 , NBC-2019AE
- PART 9 OF OBC 2012 (2019 AMENDMENT)
- CSA 086-14
- TPIC 2014

(55 % OF 54.4 P.S.F. G.S.L. PLUS 8.4 P.S.F. RAIN LOAD) EQUALS 38.3 P.S.F. SPECIFIED ROOF LIVE LOAD

CSI: TC=0.26/1.00 (C-D:1) , BC=0.09/1.00 (B-I:1) , WB=0.04/1.00 (D-G:1) , SSI=0.19/1.00 (E-K:1)

DOL LUMBER=1.00 NAIL=1.00 LS BEND=1.10 COMP=1.10 SHEAR=1.10 TENS= 1.10

COMPANION LIVE LOAD FACTOR = 1.00

TRUSS PLATE MANUFACTURER IS NOT RESPONSIBLE FOR QUALITY CONTROL IN THE TRUSS MANUFACTURING PLANT .

NAIL VALUES

PLATE	GRIP(DRY) (PSI) MAX	MIN	SHEAR (PLI) MAX	MIN	SECTION (PLI) MAX	MIN
MT20	650	371	1747	788	1987	1873

PLATE PLACEMENT TOL. = 0.250 inches

PLATE ROTATION TOL. = 5.0 Deg.

JSI GRIP= 0.17 (B) (INPUT = 0.90)
JSI METAL= 0.05 (B) (INPUT = 1.00)

JOB NAME	TRUSS NAME	QUANTITY	PLY	JOB DESC.	DRWG NO.
418649	P4	1	1	BAYVIEW WELLINGTON TRUSS DESC.	

Tamarack Roof Truss, Burlington

Version 8.630 S Aug 30 2023 MiTek Industries, Inc. Tue Nov 14 11:14:38 2023 Page 1
ID:UaoF4umx8QMX1bo7Q0Zq7Cya5EO-6PC76cXv5yn5vSpwaXkzqV2fRPV7NmWjUju6qJyJIQF

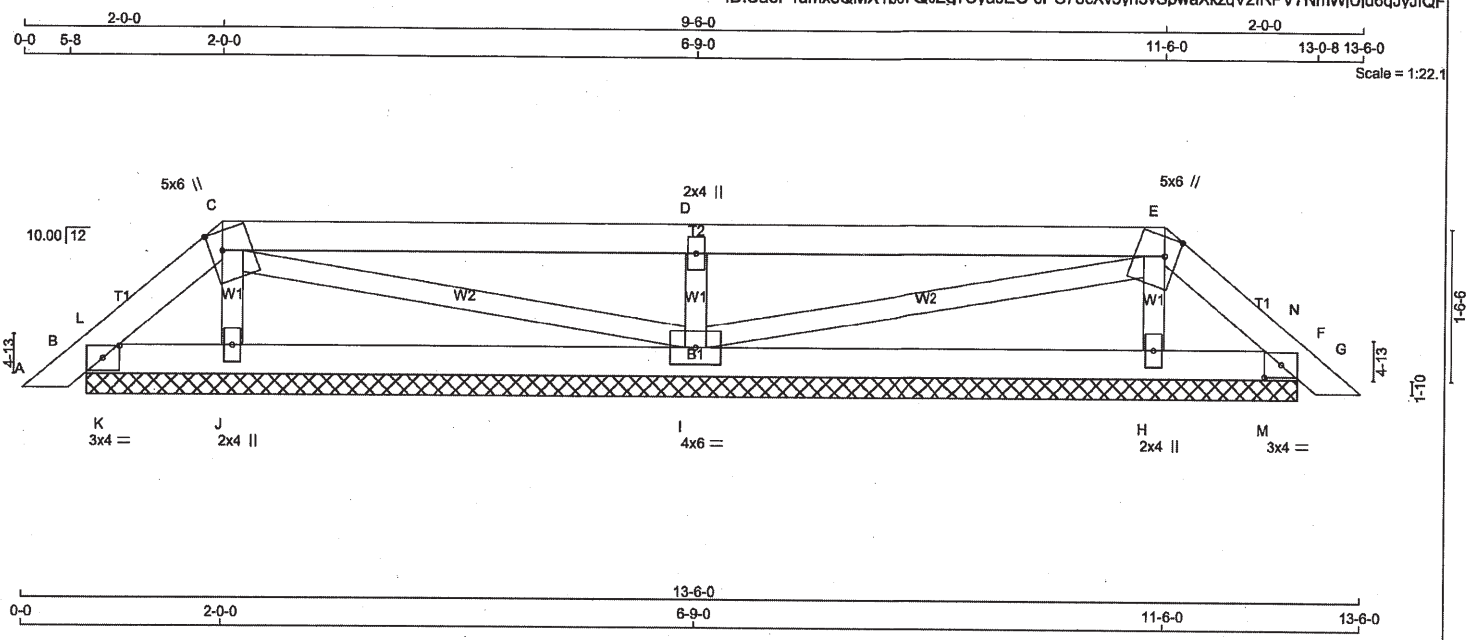

TOTAL WEIGHT = 40 lb
[M]

LUMBER
N. L. G. A. RULES

CHORDS	SIZE		LUMBER	DESCR.
A - C	2x4	DRY	No.2	SPF
C - E	2x4	DRY	No.2	SPF
E - G	2x4	DRY	No.2	SPF
B - F	2x4	DRY	No.2	SPF
ALL WEBS	2x3	DRY	No.2	SPF

DRY: SEASONED LUMBER.

PLATES (table is in inches)

JT	TYPE	PLATES	W	LEN	Y	X
B	TMB1-I	MT20	3.0	4.0	1.50	2.00
C	TTWW+m	MT20	5.0	6.0	2.25	1.50
D	TMW+w	MT20	2.0	4.0		
E	TTWW+m	MT20	5.0	6.0	2.25	1.50
F	TMB1-I	MT20	3.0	4.0	1.50	2.00
H	BMW1+w	MT20	2.0	4.0		
I	BMWWW1-t	MT20	4.0	6.0		
J	BMW1+w	MT20	2.0	4.0		

NOTES-
1) Lateral braces to be a minimum of 2X4 SPF #2..

LICENSED PROFESSIONAL ENGINEER
11/14/23
C. M. HEYENS
100505065
PROVINCE OF ONTARIO

STRUCTURAL COMPONENT ONLY
DWG # TR23111070

DIMENSIONS, SUPPORTS AND LOADINGS SPECIFIED BY FABRICATOR TO BE VERIFIED BY BUILDING DESIGNER

BEARINGS

JT	FACTORED GROSS REACTION VERT	HORZ	MAXIMUM FACTORED GROSS REACTION DOWN	HORZ	UPLIFT	INPUT BRG IN-SX	REQRD BRG IN-SX
B	199	0	199	0	0	12-2-9	1-8
F	199	0	199	0	0	12-2-9	1-8
J	343	0	343	0	0	12-2-9	1-8
I	868	0	868	0	0	12-2-9	1-8
H	343	0	343	0	0	12-2-9	1-8

UNFACTORED REACTIONS

JT	1ST LCASE COMBINED	MAX./MIN. COMPONENT REACTIONS SNOW	LIVE	PERM.LIVE	WIND	DEAD	SOIL
B	135	120 / 0	0 / 0	0 / 0	0 / 0	15 / 0	0 / 0
F	135	120 / 0	0 / 0	0 / 0	0 / 0	15 / 0	0 / 0
J	243	159 / 0	0 / 0	0 / 0	0 / 0	83 / 0	0 / 0
I	603	459 / 0	0 / 0	0 / 0	0 / 0	144 / 0	0 / 0
H	243	159 / 0	0 / 0	0 / 0	0 / 0	83 / 0	0 / 0

BEARING MATERIAL TO BE SPF NO.2 OR BETTER AT JOINT(S) B, F, J, I, H

BRACING
TOP CHORD TO BE SHEATHED OR MAX. PURLIN SPACING = 6.25 FT.
MAX. UNBRACED BOTTOM CHORD LENGTH = 10.00 FT OR RIGID CEILING DIRECTLY APPLIED.

ALL PITCH BREAKS AND PERIMETER CORNER JOINTS MUST BE LATERALLY RESTRAINED.

LOADING
TOTAL LOAD CASES: (4)

CHORDS

MEMB. FR-TO	MAX. FACTORED FORCE (LBS)	FACTORED VERT. LOAD LC1 (PLF) FROM	TO	MAX CSI (LC)	MAX. UNBRAC LENGTH
A- B	0 / 21	-129.7	-129.7	0.03 (1)	10.00
B- L	-48 / 7	-129.7	-129.7	0.01 (4)	6.25
L- C	-70 / 0	-129.7	-129.7	0.02 (1)	6.25
C- D	-9 / 0	-129.7	-129.7	0.50 (1)	10.00
D- E	-9 / 0	-129.7	-129.7	0.50 (1)	10.00
E- N	-70 / 0	-129.7	-129.7	0.02 (1)	6.25
N- F	-48 / 7	-129.7	-129.7	0.01 (4)	6.25
F- G	0 / 21	-129.7	-129.7	0.03 (1)	10.00
B- K	0 / 50	-18.5	-18.5	0.04 (1)	10.00
K- J	0 / 50	-18.5	-18.5	0.06 (4)	10.00
J- I	0 / 29	-18.5	-18.5	0.09 (4)	10.00
I- H	0 / 29	-18.5	-18.5	0.09 (4)	10.00
H- M	0 / 50	-18.5	-18.5	0.06 (4)	10.00
M- F	0 / 50	-18.5	-18.5	0.04 (1)	10.00

WEBS

MEMB. FR-TO	MAX. FACTORED FORCE (LBS)	MAX CSI (LC)
J- C	-249 / 0	0.04 (1)
C- I	-20 / 0	0.01 (1)
I- D	-770 / 0	0.11 (1)
I- E	-20 / 0	0.01 (1)
H- E	-249 / 0	0.04 (1)
K- L	-118 / 0	0.00 (1)
M- N	-118 / 0	0.00 (1)

DESIGN CRITERIA

SPECIFIED LOADS:

TOP CH.	LL	=	38.3	PSF
	DL	=	6.0	PSF
BOT CH.	LL	=	0.0	PSF
	DL	=	7.4	PSF
TOTAL LOAD		=	51.6	PSF

SPACING = 24.0 IN. C/C

LOADING IN FLAT SECTION BASED ON A SLOPE OF 6.00/12

THIS TRUSS IS DESIGNED FOR RESIDENTIAL OR SMALL BUILDING REQUIREMENTS OF PART 9, NBCC 2015

THIS DESIGN COMPLIES WITH:
- PART 9 OF BCBC 2018 , NBC-2019AE
- PART 9 OF OBC 2012 (2019 AMENDMENT)
- CSA 086-14
- TPIC 2014

(55 % OF 54.4 P.S.F. G.S.L. PLUS 8.4 P.S.F. RAIN LOAD) EQUALS 38.3 P.S.F. SPECIFIED ROOF LIVE LOAD

CSI: TC=0.50/1.00 (C-D:1) , BC=0.09/1.00 (H-I:4) , WB=0.11/1.00 (D-I:1) , SSI=0.30/1.00 (C-D:1)

DOL LUMBER=1.00 NAIL=1.00 LS BEND=1.10 COMP=1.10 SHEAR=1.10 TENS= 1.10

COMPANION LIVE LOAD FACTOR = 1.00

TRUSS PLATE MANUFACTURER IS NOT RESPONSIBLE FOR QUALITY CONTROL IN THE TRUSS MANUFACTURING PLANT .

NAIL VALUES

PLATE	GRIP(DRY) (PSI) MAX	MIN	SHEAR (PLI) MAX	MIN	SECTION (PLI) MAX	MIN
MT20	650	371	1747	788	1987	1873

PLATE PLACEMENT TOL. = 0.250 inches

PLATE ROTATION TOL. = 5.0 Deg.

JSI GRIP= 0.38 (D) (INPUT = 0.90)
JSI METAL= 0.16 (D) (INPUT = 1.00)

JOB NAME	TRUSS NAME	QUANTITY	PLY	JOB DESC.	DRWG NO.
418649	P5	1	1	BAYVIEW WELLINGTON TRUSS DESC.	

Tamarack Roof Truss, Burlington

Version 8.630 S Aug 30 2023 MiTek Industries, Inc. Tue Nov 14 11:14:39 2023 Page 1
ID:UaoF4umx8QMX1bo7Q0Zq7Cya5EO-abmWKyYXsFwyXcO67FGCMjbnSpq26DDsiNdgMlyJIQE

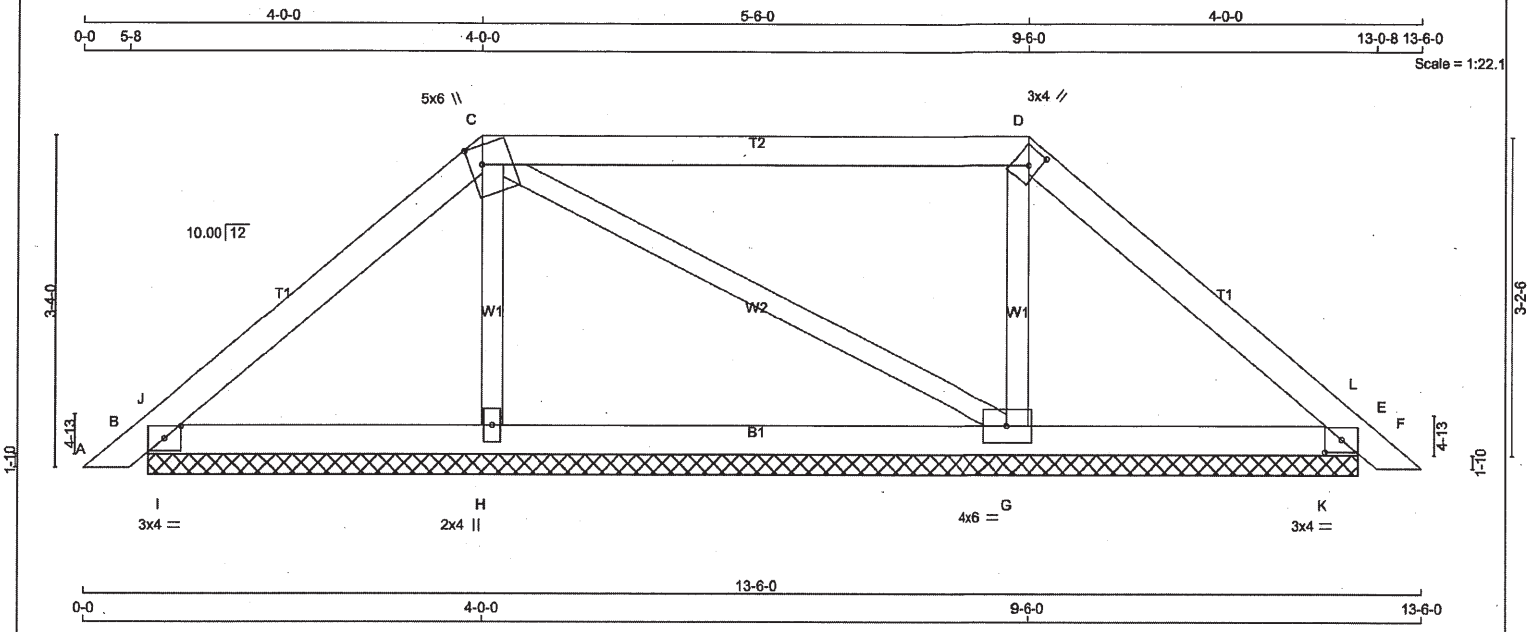

TOTAL WEIGHT = 41 lb [M]

LUMBER
N. L. G. A. RULES

CHORDS	SIZE		LUMBER	DESCR.
A - C	2x4	DRY	No.2	SPF
C - D	2x4	DRY	No.2	SPF
D - F	2x4	DRY	No.2	SPF
B - E	2x4	DRY	No.2	SPF
ALL WEBS	2x3	DRY	No.2	SPF

DRY: SEASONED LUMBER.

PLATES (table is in inches)

JT	TYPE	PLATES	W	LEN	Y	X
B	TMB1-I	MT20	3.0	4.0	1.50	2.00
C	TTWW+m	MT20	5.0	6.0	2.25	1.50
D	TTW+h	MT20	3.0	4.0	2.00	1.25
E	TMB1-I	MT20	3.0	4.0	1.50	2.00
G	BMWW1-t	MT20	4.0	6.0		
H	BMW1+w	MT20	2.0	4.0		

NOTES-
1) Lateral braces to be a minimum of 2X4 SPF #2.

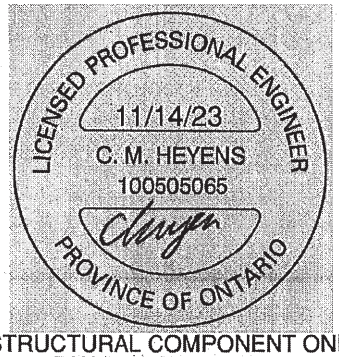

STRUCTURAL COMPONENT ONLY
DWG # TR23111071

DIMENSIONS, SUPPORTS AND LOADINGS SPECIFIED BY FABRICATOR TO BE VERIFIED BY BUILDING DESIGNER

BEARINGS

JT	FACTORED GROSS REACTION VERT	HORZ	MAXIMUM FACTORED GROSS REACTION DOWN	HORZ	UPLIFT	INPUT BRG IN-SX	REQRD BRG IN-SX
B	450	0	450	0	0	12-2-9	1-8
E	419	0	419	0	0	12-2-9	1-8
H	505	0	505	0	0	12-2-9	1-8
G	579	0	579	0	0	12-2-9	1-8

UNFACTORED REACTIONS

JT	1ST LCASE COMBINED	MAX./MIN. COMPONENT REACTIONS SNOW	LIVE	PERM.LIVE	WIND	DEAD	SOIL
B	310	252 / 0	0 / 0	0 / 0	0 / 0	58 / 0	0 / 0
E	288	233 / 0	0 / 0	0 / 0	0 / 0	55 / 0	0 / 0
H	355	245 / 0	0 / 0	0 / 0	0 / 0	110 / 0	0 / 0
G	405	288 / 0	0 / 0	0 / 0	0 / 0	117 / 0	0 / 0

BEARING MATERIAL TO BE SPF NO.2 OR BETTER AT JOINT(S) B, E, H, G

BRACING
TOP CHORD TO BE SHEATHED OR MAX. PURLIN SPACING = 6.25 FT.
MAX. UNBRACED BOTTOM CHORD LENGTH = 10.00 FT OR RIGID CEILING DIRECTLY APPLIED.

ALL PITCH BREAKS AND PERIMETER CORNER JOINTS MUST BE LATERALLY RESTRAINED.

LOADING
TOTAL LOAD CASES: (4)

CHORDS

MEMB. FR-TO	MAX. FACTORED FORCE (LBS)	FACTORED VERT. LOAD (PLF) FROM	TO	LC1	MAX CSI (LC)	MAX. UNBRAC LENGTH
A- B	0 / 21	-129.7	-129.7	0.03 (1)	10.00	
B- J	-58 / 0	-129.7	-129.7	0.09 (1)	6.25	
J- C	-232 / 0	-129.7	-129.7	0.17 (1)	6.25	
C- D	-116 / 0	-129.7	-129.7	0.67 (1)	6.25	
D- L	-184 / 0	-129.7	-129.7	0.17 (1)	6.25	
L- E	-16 / 0	-129.7	-129.7	0.08 (1)	6.25	
E- F	0 / 21	-129.7	-129.7	0.03 (1)	10.00	
B- I	0 / 168	-18.5	-18.5	0.17 (1)	10.00	
I- H	0 / 168	-18.5	-18.5	0.17 (1)	10.00	
H- G	0 / 154	-18.5	-18.5	0.10 (1)	10.00	
G- K	0 / 131	-18.5	-18.5	0.17 (1)	10.00	
K- E	0 / 131	-18.5	-18.5	0.17 (1)	10.00	

WEBS

MEMB. FR-TO	MAX. FACTORED FORCE (LBS)	MAX CSI (LC)
H- C	-377 / 0	0.07 (1)
C- G	-44 / 0	0.03 (1)
G- D	-429 / 0	0.08 (1)
I- J	-453 / 0	0.00 (1)
K- L	-459 / 0	0.00 (1)

DESIGN CRITERIA

SPECIFIED LOADS:

TOP CH.	LL	=	38.3	PSF
	DL	=	6.0	PSF
BOT CH.	LL	=	0.0	PSF
	DL	=	7.4	PSF
TOTAL LOAD		=	51.6	PSF

SPACING = 24.0 IN. C/C

LOADING IN FLAT SECTION BASED ON A SLOPE OF 6.00/12

THIS TRUSS IS DESIGNED FOR RESIDENTIAL OR SMALL BUILDING REQUIREMENTS OF PART 9, NBCC 2015

THIS DESIGN COMPLIES WITH:
- PART 9 OF BCBC 2018 , NBC-2019AE
- PART 9 OF OBC 2012 (2019 AMENDMENT)
- CSA 086-14
- TPIC 2014

(55 % OF 54.4 P.S.F. G.S.L. PLUS 8.4 P.S.F. RAIN LOAD) EQUALS 38.3 P.S.F. SPECIFIED ROOF LIVE LOAD

CSI: TC=0.67/1.00 (C-D:1) , BC=0.17/1.00 (B-I:1) , WB=0.08/1.00 (D-G:1) , SSI=0.35/1.00 (E-K:1)

DOL LUMBER=1.00 NAIL=1.00 LS BEND=1.10 COMP=1.10 SHEAR=1.10 TENS= 1.10

COMPANION LIVE LOAD FACTOR = 1.00

TRUSS PLATE MANUFACTURER IS NOT RESPONSIBLE FOR QUALITY CONTROL IN THE TRUSS MANUFACTURING PLANT .

NAIL VALUES

PLATE	GRIP(DRY) (PSI) MAX	MIN	SHEAR (PLI) MAX	MIN	SECTION (PLI) MAX	MIN
MT20	650	371	1747	788	1987	1873

PLATE PLACEMENT TOL. = 0.250 inches

PLATE ROTATION TOL. = 5.0 Deg.

JSI GRIP= 0.57 (D) (INPUT = 0.90)
JSI METAL= 0.10 (B) (INPUT = 1.00)

JOB NAME	TRUSS NAME	QUANTITY	PLY	JOB DESC.	DRWG NO.
418649	P6	1	1	BAYVIEW WELLINGTON TRUSS DESC.	

Tamarack Roof Truss, Burlington

Version 8.630 S Aug 30 2023 MiTek Industries, Inc. Tue Nov 14 11:14:40 2023 Page 1

ID:UaoF4umx8QMX1bo7Q0Zg7Cya5EO-3oKuXIY9dZ2p8mzJhynRvw8?PC6arhk0x1NDuCyJIQD

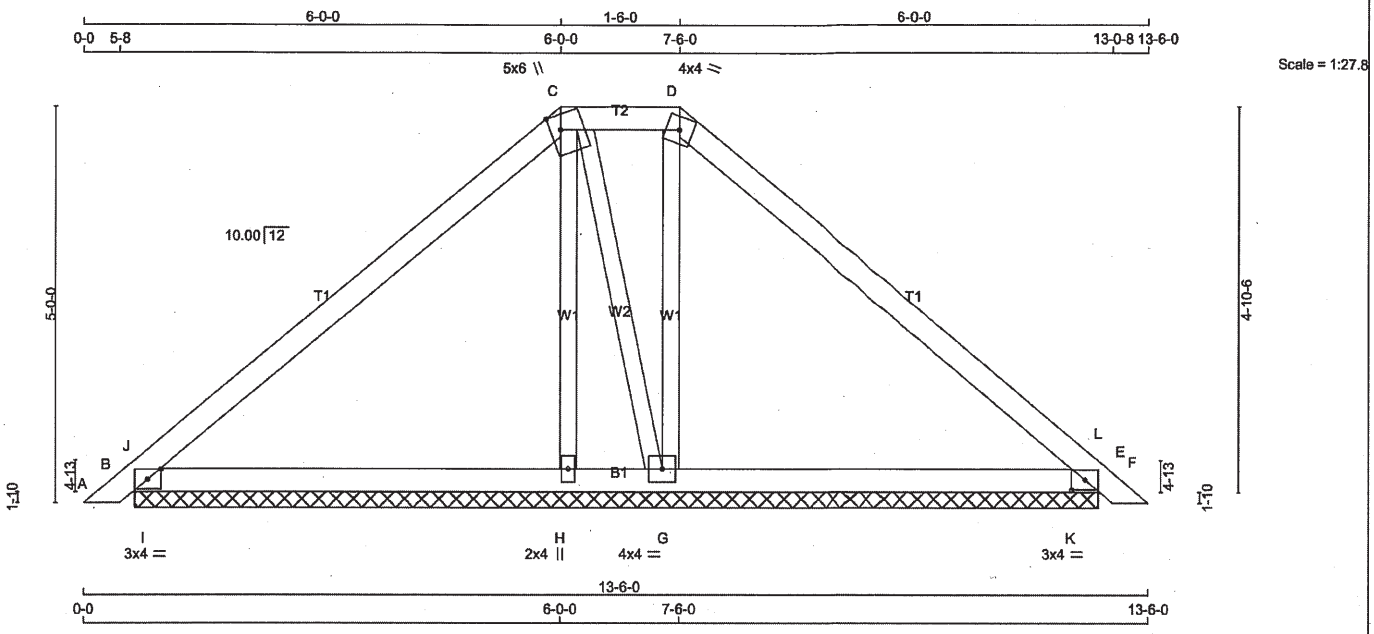

TOTAL WEIGHT = 44 lb

LUMBER

N. L. G. A. RULES

CHORDS	SIZE		LUMBER	DESCR.
A - C	2x4	DRY	No.2	SPF
C - D	2x4	DRY	No.2	SPF
D - F	2x4	DRY	No.2	SPF
B - E	2x4	DRY	No.2	SPF
ALL WEBS	2x3	DRY	No.2	SPF

DRY: SEASONED LUMBER.

PLATES (table is in inches)

JT	TYPE	PLATES	W	LEN	Y	X
B	TMB1-I	MT20	3.0	4.0	1.50	2.00
C	TTWW+m	MT20	5.0	6.0	2.25	1.50
D	TTW-m	MT20	4.0	4.0		
E	TMB1-I	MT20	3.0	4.0	1.50	2.00
G	BMWW1-t	MT20	4.0	4.0		
H	BMW1+w	MT20	2.0	4.0		

NOTES-

1) Lateral braces to be a minimum of 2X4 SPF #2.

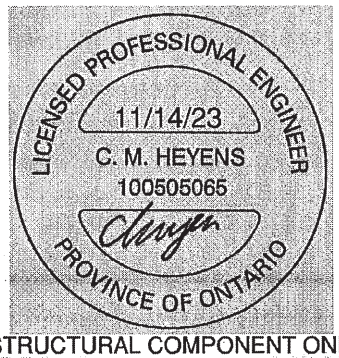

STRUCTURAL COMPONENT ONLY
DWG # TR23111072

DIMENSIONS, SUPPORTS AND LOADINGS SPECIFIED BY FABRICATOR TO BE VERIFIED BY BUILDING DESIGNER

BEARINGS

JT	FACTORED GROSS REACTION VERT	HORZ	MAXIMUM FACTORED GROSS REACTION DOWN	HORZ	UPLIFT	INPUT BRG IN-SX	REQRD BRG IN-SX
B	670	0	670	0	0	12-2-9	1-8
E	654	0	654	0	0	12-2-9	1-8
H	237	0	237	0	0	12-2-9	1-8
G	391	0	391	0	0	12-2-9	1-8

UNFACTORED REACTIONS

JT	1ST LCASE COMBINED	MAX./MIN. COMPONENT REACTIONS SNOW	LIVE	PERM.LIVE	WIND	DEAD	SOIL
B	464	361 / 0	0 / 0	0 / 0	0 / 0	103 / 0	0 / 0
E	453	351 / 0	0 / 0	0 / 0	0 / 0	102 / 0	0 / 0
H	169	105 / 0	0 / 0	0 / 0	0 / 0	64 / 0	0 / 0
G	273	202 / 0	0 / 0	0 / 0	0 / 0	71 / 0	0 / 0

BEARING MATERIAL TO BE SPF NO.2 OR BETTER AT JOINT(S) B, E, H, G

BRACING

TOP CHORD TO BE SHEATHED OR MAX. PURLIN SPACING = 6.25 FT.
MAX. UNBRACED BOTTOM CHORD LENGTH = 10.00 FT OR RIGID CEILING DIRECTLY APPLIED.

ALL PITCH BREAKS AND PERIMETER CORNER JOINTS MUST BE LATERALLY RESTRAINED.

LOADING

TOTAL LOAD CASES: (4)

CHORDS

MEMB. FR-TO	MAX. FACTORED FORCE (LBS)	FACTORED VERT. LOAD LC1 (PLF) FROM	TO	MAX CSI (LC)	MAX. UNBRAC LENGTH
A- B	0 / 21	-129.7	-129.7	0.03 (1)	10.00
B- J	-63 / 203	-129.7	-129.7	0.30 (1)	6.25
J- C	-375 / 0	-129.7	-129.7	0.47 (1)	6.25
C- D	-245 / 0	-129.7	-129.7	0.05 (1)	6.25
D- L	-350 / 0	-129.7	-129.7	0.47 (1)	6.25
L- E	-61 / 231	-129.7	-129.7	0.31 (1)	6.25
E- F	0 / 21	-129.7	-129.7	0.03 (1)	10.00
B- I	0 / 269	-18.5	-18.5	0.41 (1)	10.00
I- H	0 / 269	-18.5	-18.5	0.41 (1)	10.00
H- G	0 / 266	-18.5	-18.5	0.25 (1)	10.00
G- K	0 / 250	-18.5	-18.5	0.41 (1)	10.00
K- E	0 / 250	-18.5	-18.5	0.41 (1)	10.00

WEBS

MEMB. FR-TO	MAX. FACTORED FORCE (LBS)	MAX CSI (LC)
H- C	-97 / 0	0.03 (1)
C- G	-72 / 0	0.03 (1)
G- D	-181 / 0	0.06 (1)
I- J	-1130 / 0	0.00 (1)
K- L	-1134 / 0	0.00 (1)

DESIGN CRITERIA

SPECIFIED LOADS:

TOP CH.	LL	=	38.3	PSF
	DL	=	6.0	PSF
BOT CH.	LL	=	0.0	PSF
	DL	=	7.4	PSF
TOTAL LOAD		=	51.6	PSF

SPACING = 24.0 IN. C/C

LOADING IN FLAT SECTION BASED ON A SLOPE OF 6.00/12

THIS TRUSS IS DESIGNED FOR RESIDENTIAL OR SMALL BUILDING REQUIREMENTS OF PART 9, NBCC 2015

THIS DESIGN COMPLIES WITH:
- PART 9 OF BCBC 2018 , NBC-2019AE
- PART 9 OF OBC 2012 (2019 AMENDMENT)
- CSA 086-14
- TPIC 2014

(55 % OF 54.4 P.S.F. G.S.L. PLUS 8.4 P.S.F. RAIN LOAD) EQUALS 38.3 P.S.F. SPECIFIED ROOF LIVE LOAD

CSI: TC=0.47/1.00 (C-J:1) , BC=0.41/1.00 (B-I:1) , WB=0.06/1.00 (D-G:1) , SSI=0.86/1.00 (E-K:1)

DOL LUMBER=1.00 NAIL=1.00 LS BEND=1.10 COMP=1.10 SHEAR=1.10 TENS= 1.10

COMPANION LIVE LOAD FACTOR = 1.00

TRUSS PLATE MANUFACTURER IS NOT RESPONSIBLE FOR QUALITY CONTROL IN THE TRUSS MANUFACTURING PLANT .

NAIL VALUES

PLATE	GRIP(DRY) (PSI) MAX	MIN	SHEAR (PLI) MAX	MIN	SECTION (PLI) MAX	MIN
MT20	650	371	1747	788	1987	1873

PLATE PLACEMENT TOL. = 0.250 inches

PLATE ROTATION TOL. = 5.0 Deg.

JSI GRIP= 0.57 (B) (INPUT = 0.90)
JSI METAL= 0.15 (B) (INPUT = 1.00)

JOB NAME	TRUSS NAME	QUANTITY	PLY	JOB DESC.	DRWG NO.
418649	P7	2	1	BAYVIEW WELLINGTON TRUSS DESC.	

Tamarack Roof Truss, Burlington

Version 8.630 S Aug 30 2023 MiTek Industries, Inc. Tue Nov 14 11:14:41 2023 Page 1
ID:UaoF4umx8QMX1bo7Q0Zg7Cya5EO-X_uGleZnOtAgmvXVFgIgR8gEJcWSa6T9Ah6mReyJIQC

Scale = 1:32.7

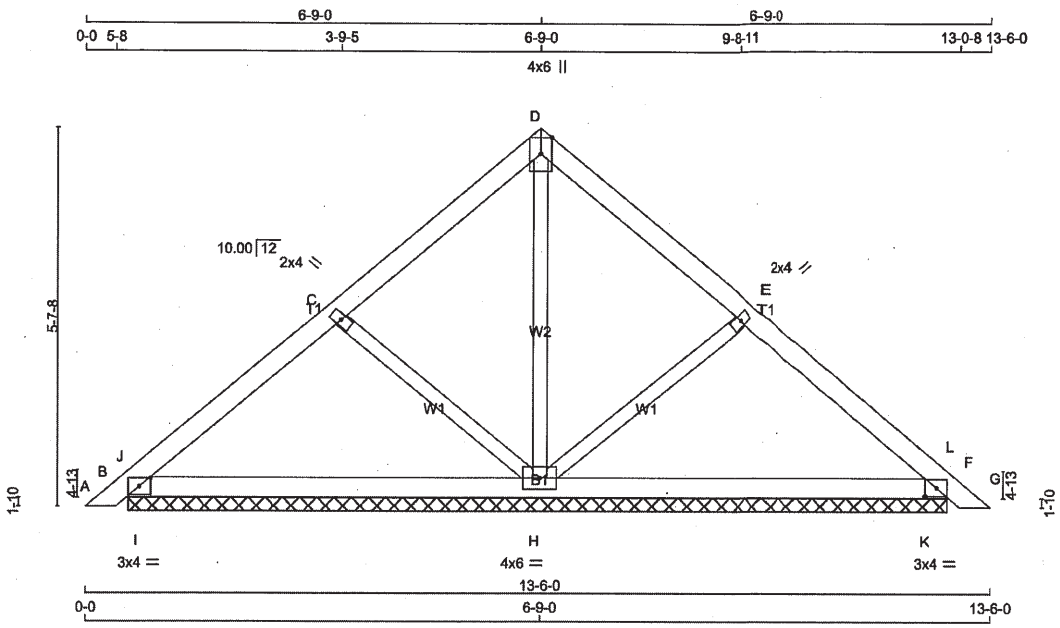

TOTAL WEIGHT = 2 X 44 = 88 lb

LUMBER
N. L. G. A. RULES

CHORDS	SIZE		LUMBER	DESCR.
A - D	2x4	DRY	No.2	SPF
D - G	2x4	DRY	No.2	SPF
B - F	2x4	DRY	No.2	SPF
ALL WEBS	2x3	DRY	No.2	SPF

DRY: SEASONED LUMBER.

PLATES (table is in inches)

JT	TYPE	PLATES	W	LEN	Y	X
B	TMB1-I	MT20	3.0	4.0	1.50	2.00
C	TMW+w	MT20	2.0	4.0		
D	TTW+p	MT20	4.0	6.0	Edge	
E	TMW+w	MT20	2.0	4.0		
F	TMB1-I	MT20	3.0	4.0	1.50	2.00
H	BMWWW1-t	MT20	4.0	6.0		

Edge - INDICATES REFERENCE CORNER OF PLATE TOUCHES EDGE OF CHORD.

NOTES-
1) Lateral braces to be a minimum of 2X4 SPF #2.

LICENSED PROFESSIONAL ENGINEER
11/14/23
C. M. HEYENS
100505065
PROVINCE OF ONTARIO

STRUCTURAL COMPONENT ONLY
DWG # TR23111073

DIMENSIONS, SUPPORTS AND LOADINGS SPECIFIED BY FABRICATOR TO BE VERIFIED BY BUILDING DESIGNER

BEARINGS

JT	FACTORED GROSS REACTION VERT	HORZ	MAXIMUM FACTORED GROSS REACTION DOWN	HORZ	UPLIFT	INPUT BRG IN-SX	REQRD BRG IN-SX
B	477	0	477	0	0	12-2-9	1-8
F	477	0	477	0	0	12-2-9	1-8
H	998	0	998	0	0	12-2-9	1-8

UNFACTORED REACTIONS

JT	1ST LCASE COMBINED	MAX./MIN. COMPONENT REACTIONS SNOW	LIVE	PERM.LIVE	WIND	DEAD	SOIL
B	331	252 / 0	0 / 0	0 / 0	0 / 0	79 / 0	0 / 0
F	331	252 / 0	0 / 0	0 / 0	0 / 0	79 / 0	0 / 0
H	696	513 / 0	0 / 0	0 / 0	0 / 0	183 / 0	0 / 0

BEARING MATERIAL TO BE SPF NO.2 OR BETTER AT JOINT(S) B, F, H

BRACING
TOP CHORD TO BE SHEATHED OR MAX. PURLIN SPACING = 6.25 FT.
MAX. UNBRACED BOTTOM CHORD LENGTH = 10.00 FT OR RIGID CEILING DIRECTLY APPLIED.

ALL PITCH BREAKS AND PERIMETER CORNER JOINTS MUST BE LATERALLY RESTRAINED.

LOADING
TOTAL LOAD CASES: (4)

CHORDS

MEMB. FR-TO	MAX. FACTORED FORCE (LBS)	FACTORED VERT. LOAD (PLF) FROM	TO	LC1 MAX CSI (LC)	MAX. UNBRAC LENGTH
A- B	0 / 21	-129.7	-129.7	0.03 (1)	10.00
B- J	-421 / 0	-129.7	-129.7	0.07 (4)	6.25
J- C	-289 / 0	-129.7	-129.7	0.20 (1)	6.25
C- D	-5 / 19	-129.7	-129.7	0.20 (1)	10.00
D- E	-5 / 19	-129.7	-129.7	0.20 (1)	10.00
E- L	-289 / 0	-129.7	-129.7	0.20 (1)	6.25
L- F	-421 / 0	-129.7	-129.7	0.07 (4)	6.25
F- G	0 / 21	-129.7	-129.7	0.03 (1)	10.00
B- I	0 / 250	-18.5	-18.5	0.06 (4)	10.00
I- H	0 / 250	-18.5	-18.5	0.18 (4)	10.00
H- K	0 / 250	-18.5	-18.5	0.18 (4)	10.00
K- F	0 / 250	-18.5	-18.5	0.06 (4)	10.00

WEBS

MEMB. FR-TO	MAX. FACTORED FORCE (LBS)	MAX CSI (LC)
H- D	-367 / 0	0.16 (1)
H- E	-378 / 0	0.10 (1)
C- H	-378 / 0	0.10 (1)
I- J	-7 / 149	0.00 (1)
K- L	-7 / 149	0.00 (1)

DESIGN CRITERIA

SPECIFIED LOADS:

TOP CH.	LL	=	38.3	PSF
	DL	=	6.0	PSF
BOT CH.	LL	=	0.0	PSF
	DL	=	7.4	PSF
TOTAL LOAD		=	51.6	PSF

SPACING = 24.0 IN. C/C

THIS TRUSS IS DESIGNED FOR RESIDENTIAL OR SMALL BUILDING REQUIREMENTS OF PART 9, NBCC 2015

THIS DESIGN COMPLIES WITH:
- PART 9 OF BCBC 2018 , NBC-2019AE
- PART 9 OF OBC 2012 (2019 AMENDMENT)
- CSA 086-14
- TPIC 2014

(55 % OF 54.4 P.S.F. G.S.L. PLUS 8.4 P.S.F. RAIN LOAD) EQUALS 38.3 P.S.F. SPECIFIED ROOF LIVE LOAD

CSI: TC=0.20/1.00 (D-E:1) , BC=0.18/1.00 (H-I:4) , WB=0.16/1.00 (D-H:1) , SSI=0.15/1.00 (C-D:1)

DOL LUMBER=1.00 NAIL=1.00 LS BEND=1.10 COMP=1.10 SHEAR=1.10 TENS= 1.10

COMPANION LIVE LOAD FACTOR = 1.00

TRUSS PLATE MANUFACTURER IS NOT RESPONSIBLE FOR QUALITY CONTROL IN THE TRUSS MANUFACTURING PLANT .

NAIL VALUES

PLATE	GRIP(DRY) (PSI) MAX	MIN	SHEAR (PLI) MAX	MIN	SECTION (PLI) MAX	MIN
MT20	650	371	1747	788	1987	1873

PLATE PLACEMENT TOL. = 0.250 inches

PLATE ROTATION TOL. = 5.0 Deg.

JSI GRIP= 0.35 (F) (INPUT = 0.90)
JSI METAL= 0.11 (F) (INPUT = 1.00)

JOB NAME	TRUSS NAME	QUANTITY	PLY	JOB DESC.	DRWG NO.
418649	P8S	1	1	BAYVIEW WELLINGTON TRUSS DESC.	

Tamarack Roof Truss, Burlington

Version 8.630 S Aug 30 2023 MiTek Industries, Inc. Tue Nov 14 11:14:42 2023 Page 1
ID:UaoF4umx8QMX1bo7Q0Zg7Cya5EO-?ARey aP9AIXO36hpNpv LDNY0sIJZfJOLsKz4yJIQB

Scale = 1:33.8

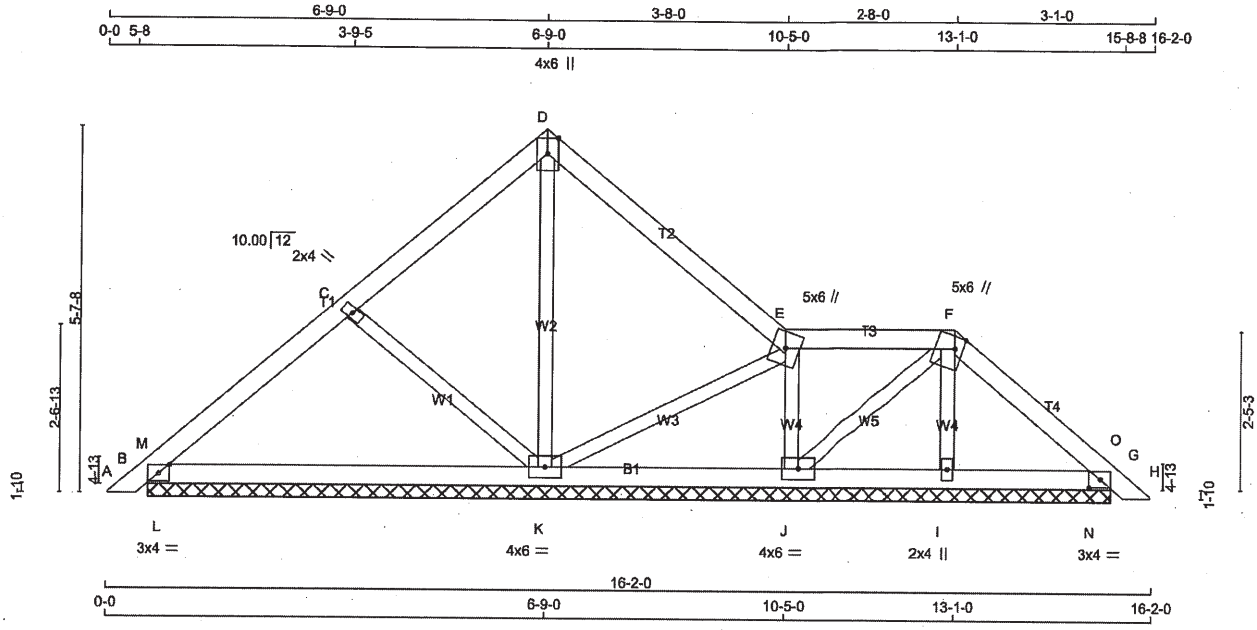

TOTAL WEIGHT = 56 lb [M]

LUMBER
N. L. G. A. RULES

CHORDS	SIZE		LUMBER	DESCR.
A - D	2x4	DRY	No.2	SPF
D - E	2x4	DRY	No.2	SPF
E - F	2x4	DRY	No.2	SPF
F - H	2x4	DRY	No.2	SPF
B - G	2x4	DRY	No.2	SPF
ALL WEBS	2x3	DRY	No.2	SPF

DRY: SEASONED LUMBER.

PLATES (table is in inches)

JT	TYPE	PLATES	W	LEN	Y	X
B	TMB1-I	MT20	3.0	4.0	1.50	2.00
C	TMW+w	MT20	2.0	4.0		
D	TTW+p	MT20	4.0	6.0	Edge	
E	TTWW+m	MT20	5.0	6.0		
F	TTWW+m	MT20	5.0	6.0	2.25	1.50
G	TMB1-I	MT20	3.0	4.0	1.50	2.00
I	BMW1+w	MT20	2.0	4.0		
J	BMWW1-t	MT20	4.0	6.0		
K	BMWWW1-t	MT20	4.0	6.0		

Edge - INDICATES REFERENCE CORNER OF PLATE TOUCHES EDGE OF CHORD.

NOTES-
1) Lateral braces to be a minimum of 2X4 SPF #2.

LICENSED PROFESSIONAL ENGINEER
11/14/23
C. M. HEYENS
100505065
PROVINCE OF ONTARIO

STRUCTURAL COMPONENT ONLY
DWG # TR23111074

DIMENSIONS, SUPPORTS AND LOADINGS SPECIFIED BY FABRICATOR TO BE VERIFIED BY BUILDING DESIGNER

BEARINGS

JT.	FACTORED GROSS REACTION VERT	HORZ	MAXIMUM FACTORED GROSS REACTION DOWN	HORZ	UPLIFT	INPUT BRG IN-SX	REQRD BRG IN-SX
B	519	0	519	0	0	14-10-9	1-8
G	318	0	318	0	0	14-10-9	1-8
K	761	0	761	0	0	14-10-9	1-8
J	464	0	464	0	0	14-10-9	1-8
I	281	0	281	0	0	14-10-9	1-8

UNFACTORED REACTIONS

JT	1ST LCASE COMBINED	MAX./MIN. COMPONENT REACTIONS SNOW	LIVE	PERM.LIVE	WIND	DEAD	SOIL
B	360	276 / 0	0 / 0	0 / 0	0 / 0	84 / 0	0 / 0
G	220	175 / 0	0 / 0	0 / 0	0 / 0	44 / 0	0 / 0
K	532	386 / 0	0 / 0	0 / 0	0 / 0	145 / 0	0 / 0
J	322	245 / 0	0 / 0	0 / 0	0 / 0	77 / 0	0 / 0
I	198	137 / 0	0 / 0	0 / 0	0 / 0	61 / 0	0 / 0

BEARING MATERIAL TO BE SPF NO.2 OR BETTER AT JOINT(S) B, G, K, J, I.

BRACING
TOP CHORD TO BE SHEATHED OR MAX. PURLIN SPACING = 6.25 FT.
MAX. UNBRACED BOTTOM CHORD LENGTH = 10.00 FT OR RIGID CEILING DIRECTLY APPLIED.

ALL PITCH BREAKS AND PERIMETER CORNER JOINTS MUST BE LATERALLY RESTRAINED.

LOADING
TOTAL LOAD CASES: (4)

CHORDS

MEMB. FR-TO	MAX. FACTORED FORCE (LBS)	FACTORED VERT. LOAD (PLF) FROM	TO	LC1 MAX CSI (LC)	MAX. UNBRAC LENGTH
A- B	0 / 20	-129.7	-129.7	0.03 (1)	10.00
B- M	-509 / 0	-129.7	-129.7	0.08 (4)	6.25
M- C	-351 / 0	-129.7	-129.7	0.20 (1)	6.25
C- D	-42 / 0	-129.7	-129.7	0.20 (1)	6.25
D- E	-12 / 0	-129.7	-129.7	0.30 (1)	6.25
E- F	-31 / 0	-129.7	-129.7	0.16 (1)	6.25
F- O	-125 / 0	-129.7	-129.7	0.09 (1)	6.25
O- G	-57 / 0	-129.7	-129.7	0.03 (1)	6.25
G- H	0 / 20	-129.7	-129.7	0.03 (1)	10.00
B- L	0 / 299	-18.5	-18.5	0.07 (4)	10.00
L- K	0 / 299	-18.5	-18.5	0.14 (4)	10.00
K- J	0 / 51	-18.5	-18.5	0.13 (4)	10.00
J- I	0 / 81	-18.5	-18.5	0.05 (1)	10.00
I- N	0 / 90	-18.5	-18.5	0.09 (1)	10.00
N- G	0 / 90	-18.5	-18.5	0.09 (1)	10.00

WEBS

MEMB. FR-TO	MAX. FACTORED FORCE (LBS)	MAX CSI (LC)
C- K	-380 / 0	0.11 (1)
K- D	-374 / 0	0.16 (1)
K- E	-48 / 0	0.01 (1)
J- E	-395 / 0	0.06 (1)
J- F	-64 / 0	0.01 (1)
I- F	-188 / 0	0.03 (1)
L- M	0 / 178	0.00 (1)
N- O	-251 / 0	0.00 (1)

DESIGN CRITERIA

SPECIFIED LOADS:

TOP CH.	LL	=	38.3	PSF
	DL	=	6.0	PSF
BOT CH.	LL	=	0.0	PSF
	DL	=	7.4	PSF
TOTAL LOAD		=	51.6	PSF

SPACING = 24.0 IN. C/C

LOADING IN ALL FLAT SECTIONS BASED ON A SLOPE OF 6.00/12

THIS TRUSS IS DESIGNED FOR RESIDENTIAL OR SMALL BUILDING REQUIREMENTS OF PART 9, NBCC 2015

THIS DESIGN COMPLIES WITH:
- PART 9 OF BCBC 2018 , NBC-2019AE
- PART 9 OF OBC 2012 (2019 AMENDMENT)
- CSA 086-14
- TPIC 2014

(55 % OF 54.4 P.S.F. G.S.L. PLUS 8.4 P.S.F. RAIN LOAD) EQUALS 38.3 P.S.F. SPECIFIED ROOF LIVE LOAD

CSI: TC=0.30/1.00 (D-E:1) , BC=0.14/1.00 (K-L:4) , WB=0.16/1.00 (D-K:1) , SSI=0.19/1.00 (G-N:1)

DOL LUMBER=1.00 NAIL=1.00 LS BEND=1.10 COMP=1.10 SHEAR=1.10 TENS= 1.10

COMPANION LIVE LOAD FACTOR = 1.00

AUTOSOLVE HEELS OFF

TRUSS PLATE MANUFACTURER IS NOT RESPONSIBLE FOR QUALITY CONTROL IN THE TRUSS MANUFACTURING PLANT .

NAIL VALUES

PLATE	GRIP(DRY) (PSI) MAX	MIN	SHEAR (PLI) MAX	MIN	SECTION (PLI) MAX	MIN
MT20	650	371	1747	788	1987	1873

PLATE PLACEMENT TOL. = 0.250 inches

PLATE ROTATION TOL. = 5.0 Deg.

JSI GRIP= 0.39 (B) (INPUT = 0.90)
JSI METAL= 0.12 (B) (INPUT = 1.00)

JOB NAME	TRUSS NAME	QUANTITY	PLY	JOB DESC.	DRWG NO.
418649	P9S	1	1	BAYVIEW WELLINGTON TRUSS DESC.	

Tamarack Roof Truss, Burlington

Version 8.630 S Aug 30 2023 MiTek Industries, Inc. Tue Nov 14 11:14:43 2023 Page 1

ID:UaoF4umx8QMX1bo7Q0Zg7Cya5EO-TM?0AKb1vUQO?DhuM4K8XZmY2Q9J21fSd?btVXyJIQA

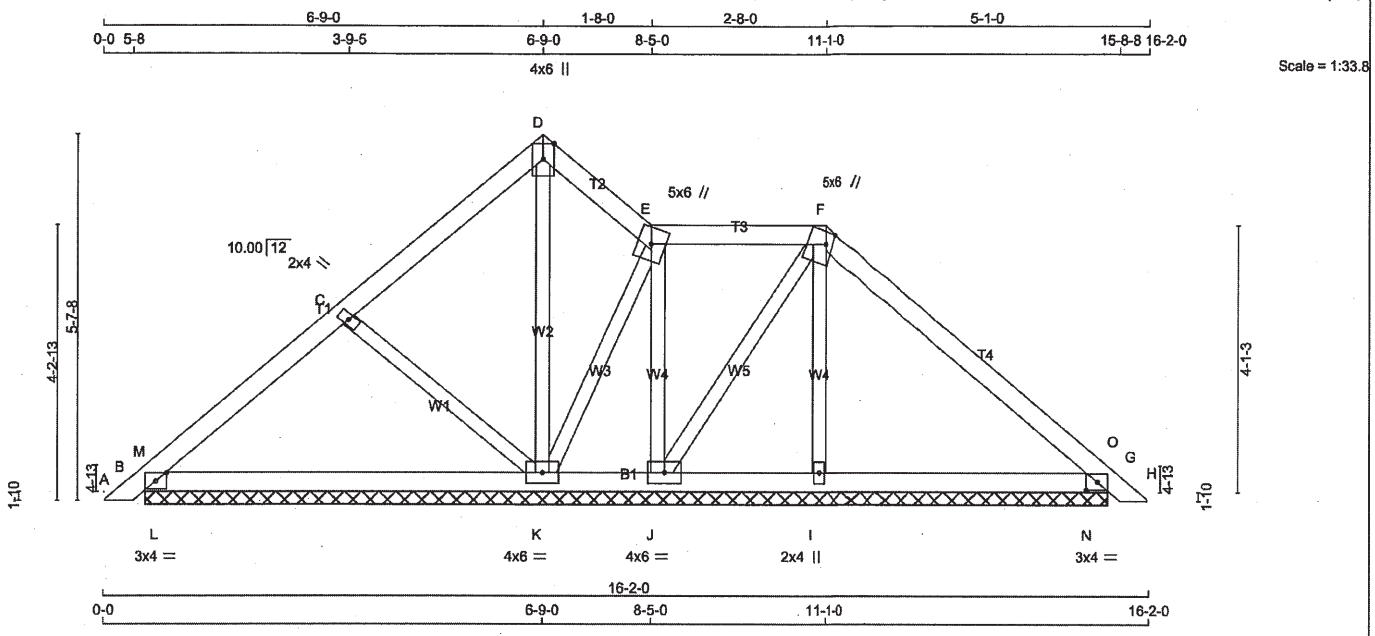

TOTAL WEIGHT = 59 lb

[M]

LUMBER

N. L. G. A. RULES

CHORDS	SIZE		LUMBER	DESCR.
A - D	2x4	DRY	No.2	SPF
D - E	2x4	DRY	No.2	SPF
E - F	2x4	DRY	No.2	SPF
F - H	2x4	DRY	No.2	SPF
B - G	2x4	DRY	No.2	SPF
ALL WEBS	2x3	DRY	No.2	SPF

DRY: SEASONED LUMBER.

PLATES (table is in inches)

JT	TYPE	PLATES	W	LEN	Y	X
B	TMB1-I	MT20	3.0	4.0	1.50	2.00
C	TMW+w	MT20	2.0	4.0		
D	TTW+p	MT20	4.0	6.0	Edge	
E	TTWW+m	MT20	5.0	6.0		
F	TTWW+m	MT20	5.0	6.0	2.25	1.50
G	TMB1-I	MT20	3.0	4.0	1.50	2.00
I	BMW1+w	MT20	2.0	4.0		
J	BMWW1-t	MT20	4.0	6.0		
K	BMWWW1-t	MT20	4.0	6.0		

Edge - INDICATES REFERENCE CORNER OF PLATE TOUCHES EDGE OF CHORD.

NOTES-

1) Lateral braces to be a minimum of 2X4 SPF #2.

LICENSED PROFESSIONAL ENGINEER
11/14/23
C. M. HEYENS
100505065
PROVINCE OF ONTARIO

STRUCTURAL COMPONENT ONLY
DWG # TR23111075

DIMENSIONS, SUPPORTS AND LOADINGS SPECIFIED BY FABRICATOR TO BE VERIFIED BY BUILDING DESIGNER

BEARINGS

JT	FACTORED GROSS REACTION VERT	HORZ	MAXIMUM FACTORED GROSS REACTION DOWN	HORZ	UPLIFT	INPUT BRG IN-SX	REQRD BRG IN-SX
B	508	0	508	0	0	14-10-9	1-8
G	503	0	503	0	0	14-10-9	1-8
K	787	0	787	0	0	14-10-9	1-8
J	200	0	200	0	0	14-10-9	1-8
I	347	0	347	0	0	14-10-9	1-8

UNFACTORED REACTIONS

JT	1ST LCASE COMBINED	MAX./MIN. COMPONENT REACTIONS SNOW	LIVE	PERM.LIVE	WIND	DEAD	SOIL
B	353	269 / 0	0 / 0	0 / 0	0 / 0	84 / 0	0 / 0
G	348	272 / 0	0 / 0	0 / 0	0 / 0	76 / 0	0 / 0
K	550	397 / 0	0 / 0	0 / 0	0 / 0	153 / 0	0 / 0
J	135	124 / 0	0 / 0	0 / 0	0 / 0	11 / 0	0 / 0
I	246	157 / 0	0 / 0	0 / 0	0 / 0	89 / 0	0 / 0

BEARING MATERIAL TO BE SPF NO.2 OR BETTER AT JOINT(S) B, G, K, J, I

BRACING

TOP CHORD TO BE SHEATHED OR MAX. PURLIN SPACING = 6.25 FT.
MAX. UNBRACED BOTTOM CHORD LENGTH = 10.00 FT OR RIGID CEILING DIRECTLY APPLIED.

ALL PITCH BREAKS AND PERIMETER CORNER JOINTS MUST BE LATERALLY RESTRAINED.

LOADING

TOTAL LOAD CASES: (4)

CHORDS

MEMB. FR-TO	MAX. FACTORED FORCE (LBS)	FACTORED VERT. LOAD LC1 (PLF) FROM	TO	MAX CSI (LC)	MAX. UNBRAC LENGTH
A- B	0 / 20	-129.7	-129.7	0.03 (1)	10.00
B- M	-486 / 0	-129.7	-129.7	0.08 (4)	6.25
M- C	-336 / 0	-129.7	-129.7	0.20 (1)	6.25
C- D	-27 / 0	-129.7	-129.7	0.20 (1)	6.25
D- E	-5 / 3	-129.7	-129.7	0.06 (1)	10.00
E- F	-53 / 0	-129.7	-129.7	0.16 (1)	6.25
F- O	-211 / 0	-129.7	-129.7	0.31 (1)	6.25
O- G	-32 / 162	-129.7	-129.7	0.20 (1)	6.25
G- H	0 / 20	-129.7	-129.7	0.03 (1)	10.00
B- L	0 / 287	-18.5	-18.5	0.07 (4)	10.00
L- K	0 / 287	-18.5	-18.5	0.14 (4)	10.00
K- J	0 / 57	-18.5	-18.5	0.13 (4)	10.00
J- I	0 / 142	-18.5	-18.5	0.16 (1)	10.00
I- N	0 / 147	-18.5	-18.5	0.28 (1)	10.00
N- G	0 / 147	-18.5	-18.5	0.28 (1)	10.00

WEBS

MEMB. FR-TO	MAX. FACTORED FORCE (LBS)	MAX CSI (LC)
C- K	-379 / 0	0.10 (1)
K- D	-264 / 0	0.12 (1)
K- E	-148 / 0	0.04 (1)
J- E	-144 / 0	0.04 (1)
J- F	-159 / 0	0.05 (1)
I- F	-160 / 0	0.04 (1)
L- M	0 / 173	0.00 (1)
N- O	-793 / 0	0.00 (1)

DESIGN CRITERIA

SPECIFIED LOADS:

TOP CH.	LL	=	38.3	PSF
	DL	=	6.0	PSF
BOT CH.	LL	=	0.0	PSF
	DL	=	7.4	PSF
TOTAL LOAD		=	51.6	PSF

SPACING = 24.0 IN. C/C

LOADING IN ALL FLAT SECTIONS BASED ON A SLOPE OF 6.00/12

THIS TRUSS IS DESIGNED FOR RESIDENTIAL OR SMALL BUILDING REQUIREMENTS OF PART 9, NBCC 2015

THIS DESIGN COMPLIES WITH:
- PART 9 OF BCBC 2018 , NBC-2019AE
- PART 9 OF OBC 2012 (2019 AMENDMENT)
- CSA 086-14
- TPIC 2014

(55 % OF 54.4 P.S.F. G.S.L. PLUS 8.4 P.S.F. RAIN LOAD) EQUALS 38.3 P.S.F. SPECIFIED ROOF LIVE LOAD

CSI: TC=0.31/1.00 (F-O:1) , BC=0.28/1.00 (I-N:1) , WB=0.12/1.00 (D-K:1) , SSI=0.60/1.00 (G-N:1)

DOL LUMBER=1.00 NAIL=1.00 LS BEND=1.10 COMP=1.10 SHEAR=1.10 TENS= 1.10

COMPANION LIVE LOAD FACTOR = 1.00

AUTOSOLVE HEELS OFF

TRUSS PLATE MANUFACTURER IS NOT RESPONSIBLE FOR QUALITY CONTROL IN THE TRUSS MANUFACTURING PLANT .

NAIL VALUES

PLATE	GRIP(DRY) (PSI) MAX	MIN	SHEAR (PLI) MAX	MIN	SECTION (PLI) MAX	MIN
MT20	650	371	1747	788	1987	1873

PLATE PLACEMENT TOL. = 0.250 inches

PLATE ROTATION TOL. = 5.0 Deg.

JSI GRIP= 0.43 (G) (INPUT = 0.90)
JSI METAL= 0.12 (B) (INPUT = 1.00)

JOB NAME	TRUSS NAME	QUANTITY	PLY	JOB DESC.	DRWG NO.
418649	P10	1	1	BAYVIEW WELLINGTON TRUSS DESC.	

Tamarack Roof Truss, Burlington

Version 8.630 S Aug 30 2023 MiTek Industries, Inc. Tue Nov 14 11:14:44 2023 Page 1
ID:UaoF4umx8QMX1bo7Q0Zg7Cya5EO-xZZPNgbggoYFdNG4worN3mIg0qTRnUocsfLR1zyJIQ9

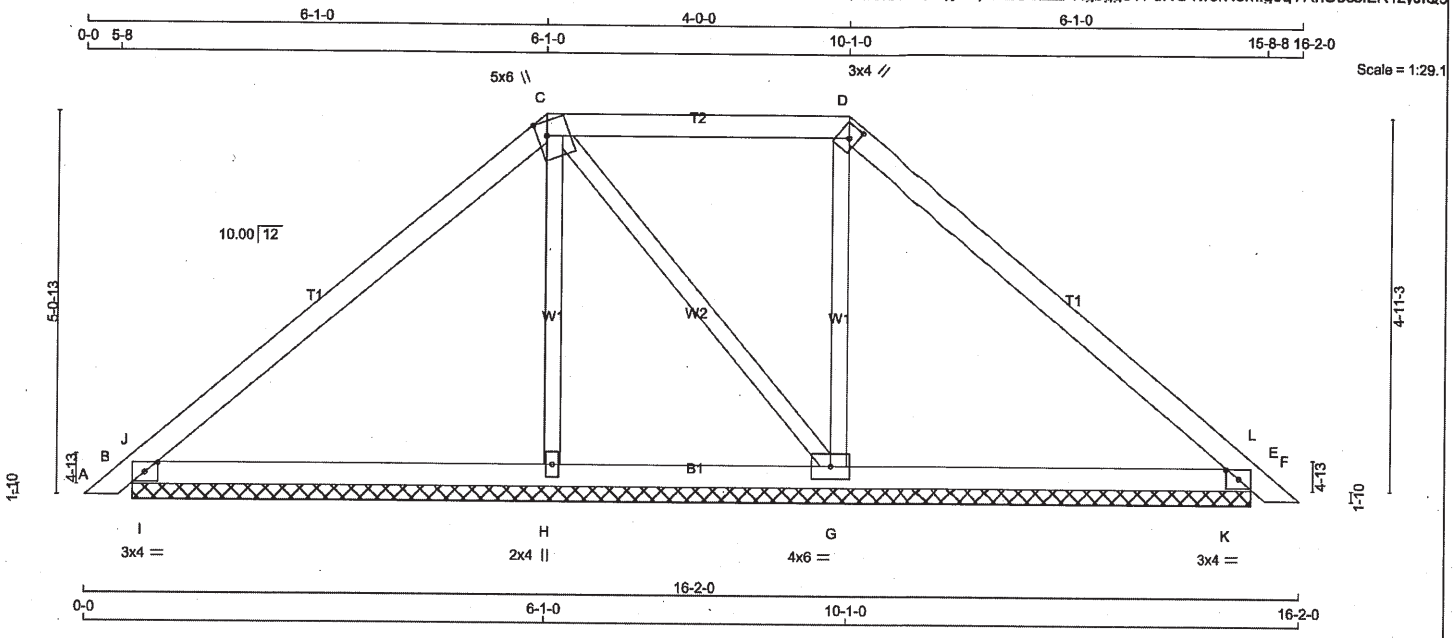

TOTAL WEIGHT = 51 lb [M]

LUMBER
N. L. G. A. RULES

CHORDS	SIZE		LUMBER	DESCR.
A - C	2x4	DRY	No.2	SPF
C - D	2x4	DRY	No.2	SPF
D - F	2x4	DRY	No.2	SPF
B - E	2x4	DRY	No.2	SPF
ALL WEBS	2x3	DRY	No.2	SPF

DRY: SEASONED LUMBER.

PLATES (table is in inches)

JT	TYPE	PLATES	W	LEN	Y	X
B	TMB1-I	MT20	3.0	4.0	1.50	2.00
C	TTWW+m	MT20	5.0	6.0	2.25	1.50
D	TTW+h	MT20	3.0	4.0	2.00	1.25
E	TMB1-I	MT20	3.0	4.0	1.50	2.00
G	BMWW1-t	MT20	4.0	6.0		
H	BMW1+w	MT20	2.0	4.0		

NOTES-
1) Lateral braces to be a minimum of 2X4 SPF #2.

DIMENSIONS, SUPPORTS AND LOADINGS SPECIFIED BY FABRICATOR TO BE VERIFIED BY BUILDING DESIGNER

BEARINGS

JT	FACTORED GROSS REACTION VERT	HORZ	MAXIMUM FACTORED GROSS REACTION DOWN	HORZ	UPLIFT	INPUT BRG IN-SX	REQRD BRG IN-SX
B	717	0	717	0	0	14-10-9	1-8
E	675	0	675	0	0	14-10-9	1-8
H	396	0	396	0	0	14-10-9	1-8
G	560	0	560	0	0	14-10-9	1-8

UNFACTORED REACTIONS

JT	1ST LCASE COMBINED	MAX./MIN. COMPONENT REACTIONS SNOW	LIVE	PERM.LIVE	WIND	DEAD	SOIL
B	496	388 / 0	0 / 0	0 / 0	0 / 0	108 / 0	0 / 0
E	468	363 / 0	0 / 0	0 / 0	0 / 0	105 / 0	0 / 0
H	279	185 / 0	0 / 0	0 / 0	0 / 0	94 / 0	0 / 0
G	391	285 / 0	0 / 0	0 / 0	0 / 0	105 / 0	0 / 0

BEARING MATERIAL TO BE SPF NO.2 OR BETTER AT JOINT(S) B, E, H, G

BRACING
TOP CHORD TO BE SHEATHED OR MAX. PURLIN SPACING = 6.25 FT.
MAX. UNBRACED BOTTOM CHORD LENGTH = 10.00 FT OR RIGID CEILING DIRECTLY APPLIED.

ALL PITCH BREAKS AND PERIMETER CORNER JOINTS MUST BE LATERALLY RESTRAINED.

LOADING
TOTAL LOAD CASES: (4)

CHORDS

MEMB. FR-TO	MAX. FACTORED FORCE (LBS)	FACTORED VERT. LOAD LC1 (PLF) FROM	TO	MAX CSI (LC)	MAX. UNBRAC LENGTH
A- B	0 / 21	-129.7	-129.7	0.03 (1)	10.00
B- J	-75 / 141	-129.7	-129.7	0.29 (1)	6.25
J- C	-426 / 0	-129.7	-129.7	0.49 (1)	6.25
C- D	-251 / 0	-129.7	-129.7	0.36 (1)	6.25
D- L	-362 / 0	-129.7	-129.7	0.49 (1)	6.25
L- E	-68 / 211	-129.7	-129.7	0.30 (1)	6.25
E- F	0 / 21	-129.7	-129.7	0.03 (1)	10.00
B- I	0 / 308	-18.5	-18.5	0.41 (1)	10.00
I- H	0 / 308	-18.5	-18.5	0.41 (1)	10.00
H- G	0 / 302	-18.5	-18.5	0.20 (1)	10.00
G- K	0 / 259	-18.5	-18.5	0.41 (1)	10.00
K- E	0 / 259	-18.5	-18.5	0.41 (1)	10.00

WEBS

MEMB. FR-TO	MAX. FACTORED FORCE (LBS)	MAX CSI (LC)
H- C	-240 / 0	0.09 (1)
C- G	-80 / 0	0.05 (1)
G- D	-342 / 0	0.12 (1)
I- J	-1119 / 0	0.00 (1)
K- L	-1127 / 0	0.00 (1)

DESIGN CRITERIA

SPECIFIED LOADS:

TOP CH.	LL	=	38.3	PSF
	DL	=	6.0	PSF
BOT CH.	LL	=	0.0	PSF
	DL	=	7.4	PSF
TOTAL LOAD		=	51.6	PSF

SPACING = 24.0 IN. C/C

LOADING IN FLAT SECTION BASED ON A SLOPE OF 6.00/12

THIS TRUSS IS DESIGNED FOR RESIDENTIAL OR SMALL BUILDING REQUIREMENTS OF PART 9, NBCC 2015

THIS DESIGN COMPLIES WITH:
- PART 9 OF BCBC 2018 , NBC-2019AE
- PART 9 OF OBC 2012 (2019 AMENDMENT)
- CSA 086-14
- TPIC 2014

(55 % OF 54.4 P.S.F. G.S.L. PLUS 8.4 P.S.F. RAIN LOAD) EQUALS 38.3 P.S.F. SPECIFIED ROOF LIVE LOAD

CSI: TC=0.49/1.00 (C-J:1) , BC=0.41/1.00 (B-I:1) , WB=0.12/1.00 (D-G:1) , SSI=0.86/1.00 (E-K:1)

DOL LUMBER=1.00 NAIL=1.00 LS BEND=1.10 COMP=1.10 SHEAR=1.10 TENS= 1.10

COMPANION LIVE LOAD FACTOR = 1.00

TRUSS PLATE MANUFACTURER IS NOT RESPONSIBLE FOR QUALITY CONTROL IN THE TRUSS MANUFACTURING PLANT .

NAIL VALUES

PLATE	GRIP(DRY) (PSI) MAX	MIN	SHEAR (PLI) MAX	MIN	SECTION (PLI) MAX	MIN
MT20	650	371	1747	788	1987	1873

PLATE PLACEMENT TOL. = 0.250 inches

PLATE ROTATION TOL. = 5.0 Deg.

JSI GRIP= 0.60 (B) (INPUT = 0.90)
JSI METAL= 0.17 (B) (INPUT = 1.00)

LICENSED PROFESSIONAL ENGINEER
11/14/23
C. M. HEYENS
100505065
PROVINCE OF ONTARIO

STRUCTURAL COMPONENT ONLY
DWG # TR23111076

JOB NAME	TRUSS NAME	QUANTITY	PLY	JOB DESC.	DRWG NO.
418651	P11	1	1	BAYVIEW WELLINGTON TRUSS DESC.	

Tamarack Roof Truss, Burlington

Version 8.630 S Aug 30 2023 MiTek Industries, Inc. Tue Nov 14 12:09:13 2023 Page 1
ID:UaoF4umx8QMX1bo7Q0Zq7Cya5EO-ITbDTS9BqBPPJlqMwr?z28BMzaFhDyWmZIjvH_yJHd4

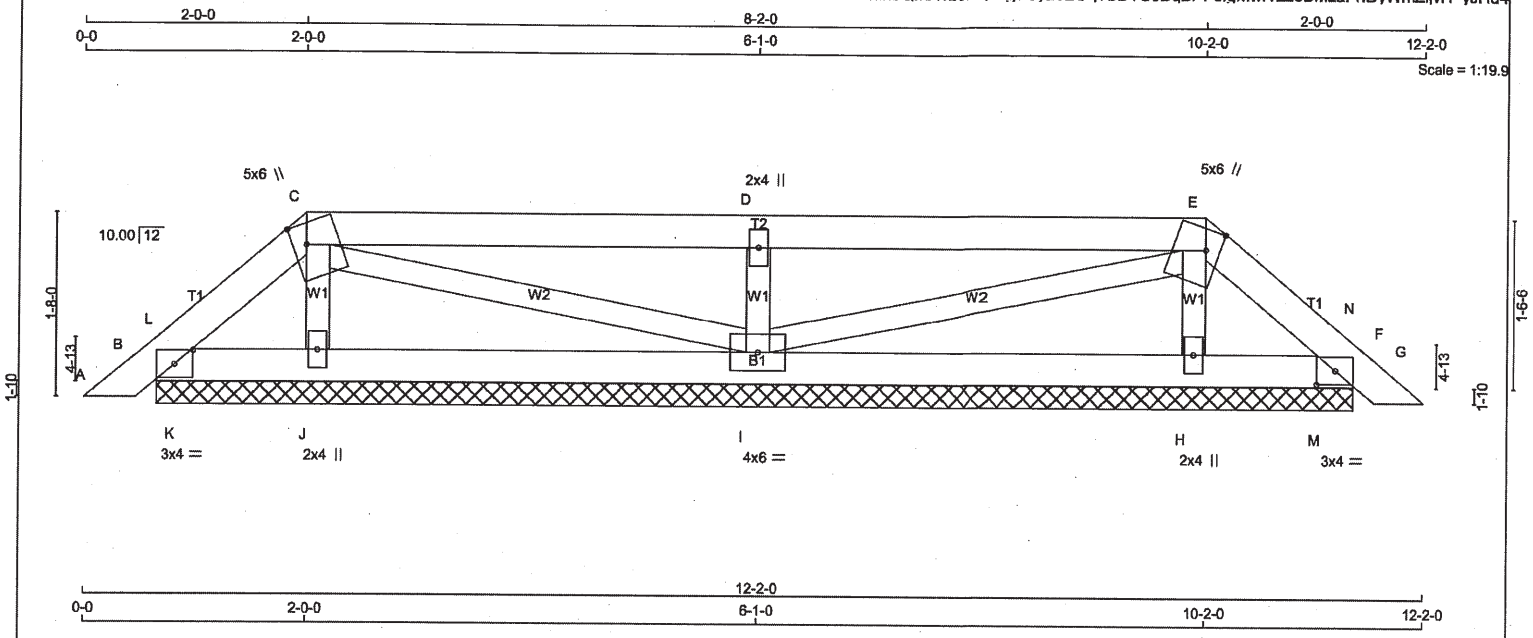

TOTAL WEIGHT = 36 lb [M]

LUMBER

N. L. G. A. RULES

CHORDS	SIZE		LUMBER	DESCR.
A - C	2x4	DRY	No.2	SPF
C - E	2x4	DRY	No.2	SPF
E - G	2x4	DRY	No.2	SPF
B - F	2x4	DRY	No.2	SPF
ALL WEBS	2x3	DRY	No.2	SPF

DRY: SEASONED LUMBER.

PLATES (table is in inches)

JT	TYPE	PLATES	W	LEN	Y	X
B	TMB1-I	MT20	3.0	4.0	1.50	2.00
C	TTWW+m	MT20	5.0	6.0	2.25	1.50
D	TMW+w	MT20	2.0	4.0		
E	TTWW+m	MT20	5.0	6.0	2.25	1.50
F	TMB1-I	MT20	3.0	4.0	1.50	2.00
H	BMW1+w	MT20	2.0	4.0		
I	BMWWW1-t	MT20	4.0	6.0		
J	BMW1+w	MT20	2.0	4.0		

NOTES-

1) Lateral braces to be a minimum of 2X4 SPF #2.

LICENSED PROFESSIONAL ENGINEER
11/14/23
C. M. HEYENS
100505065
PROVINCE OF ONTARIO

STRUCTURAL COMPONENT ONLY
DWG # TR23111104

DIMENSIONS, SUPPORTS AND LOADINGS SPECIFIED BY FABRICATOR TO BE VERIFIED BY BUILDING DESIGNER

BEARINGS

JT	FACTORED GROSS REACTION VERT	HORZ	MAXIMUM FACTORED GROSS REACTION DOWN	HORZ	UPLIFT	INPUT BRG IN-SX	REQRD BRG IN-SX
B	202	0	202	0	0	10-10-9	1-8
F	202	0	202	0	0	10-10-9	1-8
J	301	0	301	0	0	10-10-9	1-8
I	749	0	749	0	0	10-10-9	1-8
H	301	0	301	0	0	10-10-9	1-8

UNFACTORED REACTIONS

JT	1ST LCASE COMBINED	MAX./MIN. COMPONENT REACTIONS SNOW	LIVE	PERM.LIVE	WIND	DEAD	SOIL
B	138	119 / 0	0 / 0	0 / 0	0 / 0	19 / 0	0 / 0
F	138	119 / 0	0 / 0	0 / 0	0 / 0	19 / 0	0 / 0
J	213	141 / 0	0 / 0	0 / 0	0 / 0	71 / 0	0 / 0
I	520	396 / 0	0 / 0	0 / 0	0 / 0	124 / 0	0 / 0
H	213	141 / 0	0 / 0	0 / 0	0 / 0	71 / 0	0 / 0

BEARING MATERIAL TO BE SPF NO.2 OR BETTER AT JOINT(S) B, F, J, I, H

BRACING

TOP CHORD TO BE SHEATHED OR MAX. PURLIN SPACING = 6.25 FT.
MAX. UNBRACED BOTTOM CHORD LENGTH = 10.00 FT OR RIGID CEILING DIRECTLY APPLIED.

ALL PITCH BREAKS AND PERIMETER CORNER JOINTS MUST BE LATERALLY RESTRAINED.

LOADING

TOTAL LOAD CASES: (4)

CHORDS

MEMB. FR-TO	MAX. FACTORED FORCE (LBS)	FACTORED VERT. LOAD (PLF) FROM	TO	LC1 MAX CSI (LC)	MAX. UNBRAC LENGTH
A- B	0 / 21	-129.7	-129.7	0.03 (1)	10.00
B- L	-51 / 1	-129.7	-129.7	0.01 (1)	6.25
L- C	-66 / 0	-129.7	-129.7	0.02 (1)	6.25
C- D	-8 / 0	-129.7	-129.7	0.37 (1)	10.00
D- E	-8 / 0	-129.7	-129.7	0.37 (1)	10.00
E- N	-66 / 0	-129.7	-129.7	0.02 (1)	6.25
N- F	-51 / 1	-129.7	-129.7	0.01 (1)	6.25
F- G	0 / 21	-129.7	-129.7	0.03 (1)	10.00
B- K	0 / 48	-18.5	-18.5	0.04 (1)	10.00
K- J	0 / 48	-18.5	-18.5	0.05 (4)	10.00
J- I	0 / 29	-18.5	-18.5	0.06 (4)	10.00
I- H	0 / 29	-18.5	-18.5	0.06 (4)	10.00
H- M	0 / 48	-18.5	-18.5	0.05 (4)	10.00
M- F	0 / 48	-18.5	-18.5	0.04 (1)	10.00

WEBS

MEMB. FR-TO	MAX. FACTORED FORCE (LBS)	MAX CSI (LC)
J- C	-219 / 0	0.03 (1)
C- I	-22 / 0	0.01 (1)
I- D	-661 / 0	0.09 (1)
I- E	-22 / 0	0.01 (1)
H- E	-219 / 0	0.03 (1)
K- L	-109 / 0	0.00 (1)
M- N	-109 / 0	0.00 (1)

DESIGN CRITERIA

SPECIFIED LOADS:

TOP CH.	LL	=	38.3	PSF
	DL	=	6.0	PSF
BOT CH.	LL	=	0.0	PSF
	DL	=	7.4	PSF
TOTAL LOAD		=	51.6	PSF

SPACING = 24.0 IN. C/C

LOADING IN FLAT SECTION BASED ON A SLOPE OF 6.00/12

THIS TRUSS IS DESIGNED FOR RESIDENTIAL OR SMALL BUILDING REQUIREMENTS OF PART 9, NBCC 2015

THIS DESIGN COMPLIES WITH:
- PART 9 OF BCBC 2018 , NBC-2019AE
- PART 9 OF OBC 2012 (2019 AMENDMENT)
- CSA 086-14
- TPIC 2014

(55 % OF 54.4 P.S.F. G.S.L. PLUS 8.4 P.S.F. RAIN LOAD) EQUALS 38.3 P.S.F. SPECIFIED ROOF LIVE LOAD

CSI: TC=0.37/1.00 (D-E:1) , BC=0.06/1.00 (H-I:4) , WB=0.09/1.00 (D-I:1) , SSI=0.26/1.00 (C-D:1)

DOL LUMBER=1.00 NAIL=1.00 LS BEND=1.10 COMP=1.10 SHEAR=1.10 TENS= 1.10

COMPANION LIVE LOAD FACTOR = 1.00

TRUSS PLATE MANUFACTURER IS NOT RESPONSIBLE FOR QUALITY CONTROL IN THE TRUSS MANUFACTURING PLANT .

NAIL VALUES

PLATE	GRIP(DRY) (PSI) MAX	MIN	SHEAR (PLI) MAX	MIN	SECTION (PLI) MAX	MIN
MT20	650	371	1747	788	1987	1873

PLATE PLACEMENT TOL. = 0.250 inches

PLATE ROTATION TOL. = 5.0 Deg.

JSI GRIP= 0.33 (D) (INPUT = 0.90)
JSI METAL= 0.14 (D) (INPUT = 1.00)

JOB NAME	TRUSS NAME	QUANTITY	PLY	JOB DESC.	DRWG NO.
418651	P12	1	1	BAYVIEW WELLINGTON TRUSS DESC.	

Tamarack Roof Truss, Burlington

Version 8.630 S Aug 30 2023 MiTek Industries, Inc. Tue Nov 14 12:09:15 2023 Page 1
ID:UaoF4umx8QMX1bo7Q0Zg7Cya5EO-qrjzu8BSMof7Y3qk2G1R8ZHhBNwXhsS303C0LtyJHd2

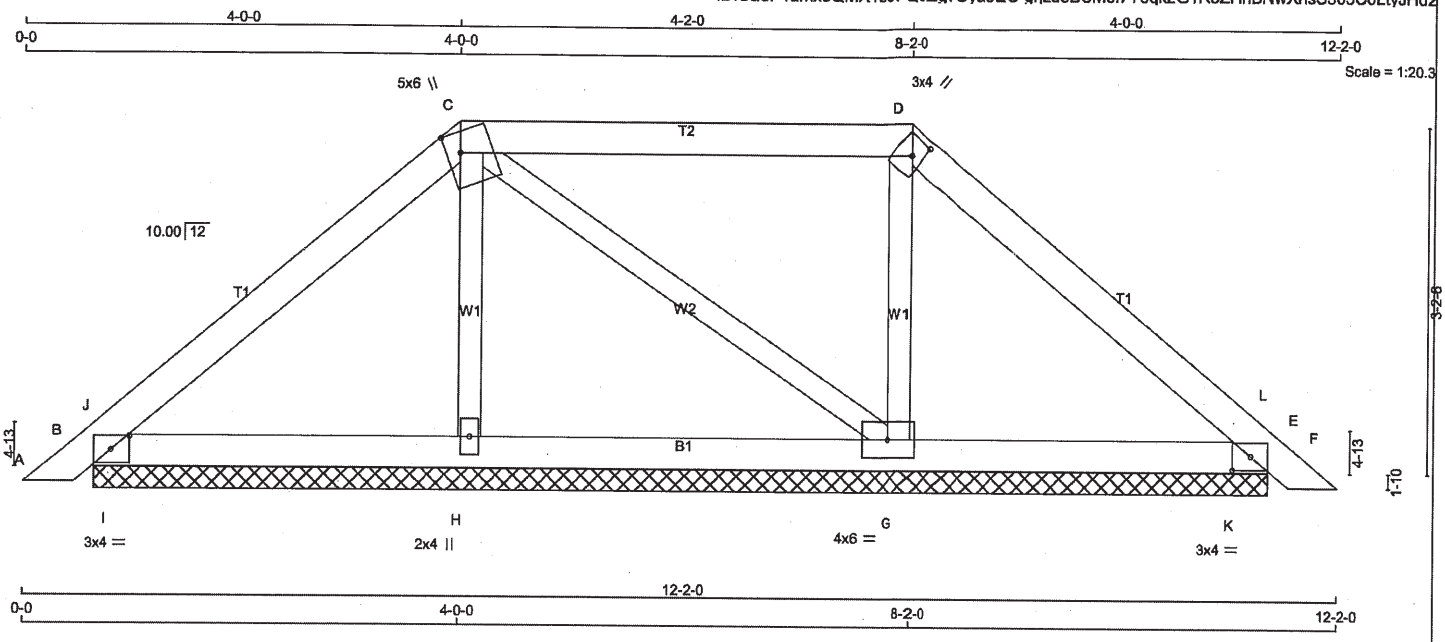

TOTAL WEIGHT = 37 lb
[M]

LUMBER
N. L. G. A. RULES

CHORDS	SIZE		LUMBER	DESCR.
A - C	2x4	DRY	No.2	SPF
C - D	2x4	DRY	No.2	SPF
D - F	2x4	DRY	No.2	SPF
B - E	2x4	DRY	No.2	SPF
ALL WEBS	2x3	DRY	No.2	SPF

DRY: SEASONED LUMBER.

PLATES (table is in inches)

JT	TYPE	PLATES	W	LEN	Y	X
B	TMB1-I	MT20	3.0	4.0	1.50	2.00
C	TTWW+m	MT20	5.0	6.0	2.25	1.50
D	TTW+h	MT20	3.0	4.0	2.00	1.25
E	TMB1-I	MT20	3.0	4.0	1.50	2.00
G	BMWW1-t	MT20	4.0	6.0		
H	BMW1+w	MT20	2.0	4.0		

NOTES-
1) Lateral braces to be a minimum of 2X4 SPF #2.

LICENSED PROFESSIONAL ENGINEER
11/14/23
C. M. HEYENS
100505065
PROVINCE OF ONTARIO

STRUCTURAL COMPONENT ONLY
DWG # TR23111105

DIMENSIONS, SUPPORTS AND LOADINGS SPECIFIED BY FABRICATOR TO BE VERIFIED BY BUILDING DESIGNER

BEARINGS

JT	FACTORED GROSS REACTION VERT	HORZ	MAXIMUM FACTORED GROSS REACTION DOWN	HORZ	UPLIFT	INPUT BRG IN-SX	REQRD BRG IN-SX
B	449	0	449	0	0	10-10-9	1-8
E	415	0	415	0	0	10-10-9	1-8
H	399	0	399	0	0	10-10-9	1-8
G	491	0	491	0	0	10-10-9	1-8

UNFACTORED REACTIONS

JT	1ST LCASE COMBINED	MAX./MIN. COMPONENT REACTIONS SNOW	LIVE	PERM.LIVE	WIND	DEAD	SOIL
B	310	247 / 0	0 / 0	0 / 0	0 / 0	62 / 0	0 / 0
E	287	228 / 0	0 / 0	0 / 0	0 / 0	59 / 0	0 / 0
H	281	193 / 0	0 / 0	0 / 0	0 / 0	88 / 0	0 / 0
G	344	248 / 0	0 / 0	0 / 0	0 / 0	96 / 0	0 / 0

BEARING MATERIAL TO BE SPF NO.2 OR BETTER AT JOINT(S) B, E, H, G

BRACING
TOP CHORD TO BE SHEATHED OR MAX. PURLIN SPACING = 6.25 FT.
MAX. UNBRACED BOTTOM CHORD LENGTH = 10.00 FT OR RIGID CEILING DIRECTLY APPLIED.

ALL PITCH BREAKS AND PERIMETER CORNER JOINTS MUST BE LATERALLY RESTRAINED.

LOADING
TOTAL LOAD CASES: (4)

CHORDS

MEMB. FR-TO	MAX. FACTORED FORCE (LBS)	FACTORED VERT. LOAD (PLF) FROM	TO	LC1 MAX CSI (LC)	MAX. UNBRAC LENGTH
A- B	0 / 21	-129.7	-129.7	0.03 (1)	10.00
B- J	-59 / 0	-129.7	-129.7	0.08 (1)	6.25
J- C	-225 / 0	-129.7	-129.7	0.18 (1)	6.25
C- D	-112 / 0	-129.7	-129.7	0.38 (1)	6.25
D- L	-174 / 0	-129.7	-129.7	0.18 (1)	6.25
L- E	-29 / 0	-129.7	-129.7	0.08 (1)	6.25
E- F	0 / 21	-129.7	-129.7	0.03 (1)	10.00
B- I	0 / 163	-18.5	-18.5	0.17 (1)	10.00
I- H	0 / 163	-18.5	-18.5	0.17 (1)	10.00
H- G	0 / 153	-18.5	-18.5	0.09 (1)	10.00
G- K	0 / 124	-18.5	-18.5	0.16 (1)	10.00
K- E	0 / 124	-18.5	-18.5	0.16 (1)	10.00

WEBS

MEMB. FR-TO	MAX. FACTORED FORCE (LBS)	MAX CSI (LC)
H- C	-287 / 0	0.05 (1)
C- G	-50 / 0	0.02 (1)
G- D	-349 / 0	0.07 (1)
I- J	-442 / 0	0.00 (1)
K- L	-449 / 0	0.00 (1)

DESIGN CRITERIA

SPECIFIED LOADS:

TOP CH.	LL	=	38.3	PSF
	DL	=	6.0	PSF
BOT CH.	LL	=	0.0	PSF
	DL	=	7.4	PSF
TOTAL LOAD		=	51.6	PSF

SPACING = 24.0 IN. C/C

LOADING IN FLAT SECTION BASED ON A SLOPE OF 6.00/12

THIS TRUSS IS DESIGNED FOR RESIDENTIAL OR SMALL BUILDING REQUIREMENTS OF PART 9, NBCC 2015

THIS DESIGN COMPLIES WITH:
- PART 9 OF BCBC 2018 , NBC-2019AE
- PART 9 OF OBC 2012 (2019 AMENDMENT)
- CSA 086-14
- TPIC 2014

(55 % OF 54.4 P.S.F. G.S.L. PLUS 8.4 P.S.F. RAIN LOAD) EQUALS 38.3 P.S.F. SPECIFIED ROOF LIVE LOAD

CSI: TC=0.38/1.00 (C-D:1) , BC=0.17/1.00 (B-I:1) , WB=0.07/1.00 (D-G:1) , SSI=0.34/1.00 (E-K:1)

DOL LUMBER=1.00 NAIL=1.00 LS BEND=1.10 COMP=1.10 SHEAR=1.10 TENS= 1.10

COMPANION LIVE LOAD FACTOR = 1.00

TRUSS PLATE MANUFACTURER IS NOT RESPONSIBLE FOR QUALITY CONTROL IN THE TRUSS MANUFACTURING PLANT .

NAIL VALUES

PLATE	GRIP(DRY) (PSI) MAX	MIN	SHEAR (PLI) MAX	MIN	SECTION (PLI) MAX	MIN
MT20	650	371	1747	788	1987	1873

PLATE PLACEMENT TOL. = 0.250 inches

PLATE ROTATION TOL. = 5.0 Deg.

JSI GRIP= 0.44 (D) (INPUT = 0.90)
JSI METAL= 0.10 (B) (INPUT = 1.00)

JOB NAME	TRUSS NAME	QUANTITY	PLY	JOB DESC.	DRWG NO.
418651	P13	1	1	BAYVIEW WELLINGTON TRUSS DESC.	

Tamarack Roof Truss, Burlington

Version 8.630 S Aug 30 2023 MiTek Industries, Inc. Tue Nov 14 12:09:16 2023 Page 1
ID:UaoF4umx8QMX1bo7Q0Zg7Cya5EO-81GL5TC476n ACPxbzYggmpranCYQK?DFjxZtJyJHd1

Scale = 1:29.6

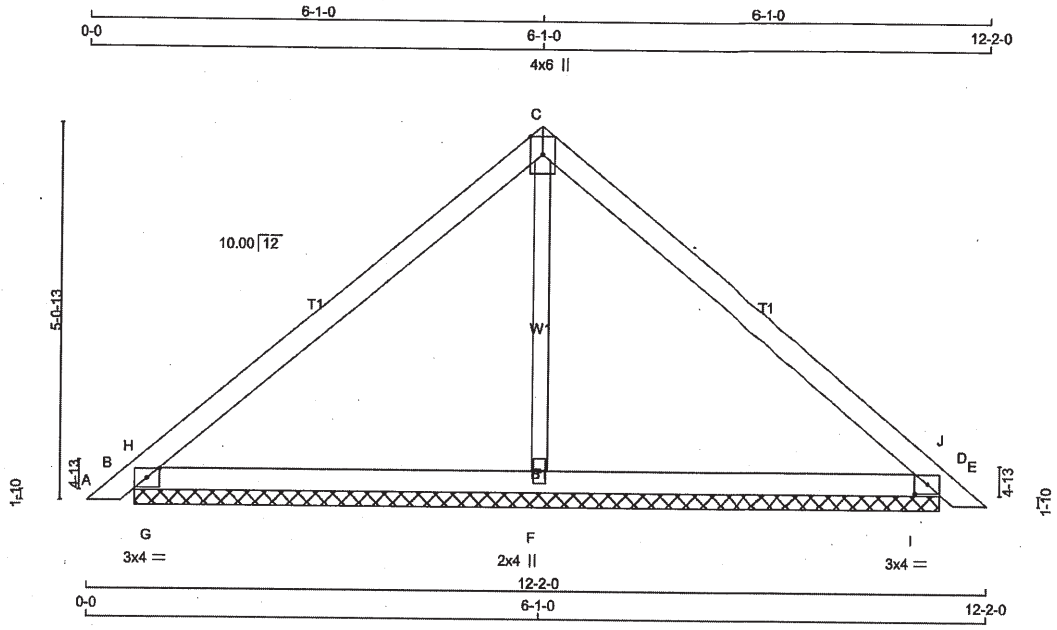

TOTAL WEIGHT = 34 lb [M]

LUMBER
N. L. G. A. RULES

CHORDS	SIZE		LUMBER	DESCR.
A - C	2x4	DRY	No.2	SPF
C - E	2x4	DRY	No.2	SPF
B - D	2x4	DRY	No.2	SPF
ALL WEBS	2x3	DRY	No.2	SPF

DRY: SEASONED LUMBER.

PLATES (table is in Inches)

JT	TYPE	PLATES	W	LEN	Y	X
B	TMB1-I	MT20	3.0	4.0	1.50	2.00
C	TTW+p	MT20	4.0	6.0	Edge	
D	TMB1-I	MT20	3.0	4.0	1.50	2.00
F	BMW1+w	MT20	2.0	4.0		

Edge - INDICATES REFERENCE CORNER OF PLATE TOUCHES EDGE OF CHORD.

NOTES-
1) Lateral braces to be a minimum of 2X4 SPF #2.

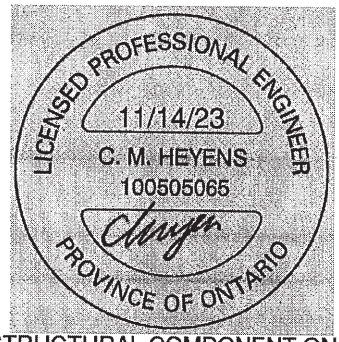

STRUCTURAL COMPONENT ONLY
DWG # TR23111106

DIMENSIONS, SUPPORTS AND LOADINGS SPECIFIED BY FABRICATOR TO BE VERIFIED BY BUILDING DESIGNER

BEARINGS

JT	FACTORED GROSS REACTION VERT	HORZ	MAXIMUM FACTORED GROSS REACTION DOWN	HORZ	UPLIFT	INPUT BRG IN-SX	REQRD BRG IN-SX
B	664	0	664	0	0	10-10-9	1-8
D	664	0	664	0	0	10-10-9	1-8
F	427	0	427	0	0	10-10-9	1-8

UNFACTORED REACTIONS

JT	1ST LCASE COMBINED	MAX./MIN. COMPONENT REACTIONS SNOW	LIVE	PERM.LIVE	WIND	DEAD	SOIL
B	459	361 / 0	0 / 0	0 / 0	0 / 0	98 / 0	0 / 0
D	459	361 / 0	0 / 0	0 / 0	0 / 0	98 / 0	0 / 0
F	303	194 / 0	0 / 0	0 / 0	0 / 0	109 / 0	0 / 0

BEARING MATERIAL TO BE SPF NO.2 OR BETTER AT JOINT(S) B, D, F

BRACING
TOP CHORD TO BE SHEATHED OR MAX. PURLIN SPACING = 6.25 FT.
MAX. UNBRACED BOTTOM CHORD LENGTH = 10.00 FT OR RIGID CEILING DIRECTLY APPLIED.

ALL PITCH BREAKS AND PERIMETER CORNER JOINTS MUST BE LATERALLY RESTRAINED.

LOADING
TOTAL LOAD CASES: (4)

CHORDS

MEMB. FR-TO	MAX. FACTORED FORCE (LBS)	FACTORED VERT. LOAD LC1 (PLF) FROM	TO	MAX CSI (LC)	MAX. UNBRAC LENGTH
A- B	0 / 21	-129.7	-129.7	0.03 (1)	10.00
B- H	-37 / 272	-129.7	-129.7	0.35 (1)	6.25
H- C	-382 / 0	-129.7	-129.7	0.47 (1)	6.25
C- J	-382 / 0	-129.7	-129.7	0.47 (1)	6.25
J- D	-37 / 272	-129.7	-129.7	0.35 (1)	6.25
D- E	0 / 21	-129.7	-129.7	0.03 (1)	10.00
B- G	0 / 272	-18.5	-18.5	0.44 (1)	10.00
G- F	0 / 272	-18.5	-18.5	0.44 (1)	10.00
F- I	0 / 272	-18.5	-18.5	0.44 (1)	10.00
I- D	0 / 272	-18.5	-18.5	0.44 (1)	10.00

WEBS

MEMB. FR-TO	MAX. FACTORED FORCE (LBS)	MAX CSI (LC)
F- C	-135 / 0	0.05 (1)
G- H	-1238 / 0	0.00 (1)
I- J	-1238 / 0	0.00 (1)

DESIGN CRITERIA

SPECIFIED LOADS:

TOP CH.	LL	=	38.3	PSF
	DL	=	6.0	PSF
BOT CH.	LL	=	0.0	PSF
	DL	=	7.4	PSF
TOTAL LOAD		=	51.6	PSF

SPACING = 24.0 IN. C/C

THIS TRUSS IS DESIGNED FOR RESIDENTIAL OR SMALL BUILDING REQUIREMENTS OF PART 9, NBCC 2015

THIS DESIGN COMPLIES WITH:
- PART 9 OF BCBC 2018 , NBC-2019AE
- PART 9 OF OBC 2012 (2019 AMENDMENT)
- CSA 086-14
- TPIC 2014

(55 % OF 54.4 P.S.F. G.S.L. PLUS 8.4 P.S.F. RAIN LOAD) EQUALS 38.3 P.S.F. SPECIFIED ROOF LIVE LOAD

CSI: TC=0.47/1.00 (C-H:1) , BC=0.44/1.00 (B-G:1) , WB=0.05/1.00 (C-F:1) , SSI=0.93/1.00 (B-G:1)

DOL LUMBER=1.00 NAIL=1.00 LS BEND=1.10 COMP=1.10 SHEAR=1.10 TENS= 1.10

COMPANION LIVE LOAD FACTOR = 1.00

TRUSS PLATE MANUFACTURER IS NOT RESPONSIBLE FOR QUALITY CONTROL IN THE TRUSS MANUFACTURING PLANT .

NAIL VALUES

PLATE	GRIP(DRY) (PSI) MAX	MIN	SHEAR (PLI) MAX	MIN	SECTION (PLI) MAX	MIN
MT20	650	371	1747	788	1987	1873

PLATE PLACEMENT TOL. = 0.250 inches

PLATE ROTATION TOL. = 5.0 Deg.

JSI GRIP= 0.58 (B) (INPUT = 0.90)
JSI METAL= 0.16 (B) (INPUT = 1.00)

JOB NAME	TRUSS NAME	QUANTITY	PLY	JOB DESC.	DRWG NO.
418651	P20	2	1	BAYVIEW WELLINGTON TRUSS DESC.	

Tamarack Roof Truss, Burlington

Version 8.630 S Aug 30 2023 MiTek Industries, Inc. Tue Nov 14 12:09:17 2023 Page 1
ID:UaoF4umx8QMX1bo7Q0Zq7Cya5EO-cEqkJpDitQvroM 79h3vD M0HBYM9m3MUNh7QmyJHd0

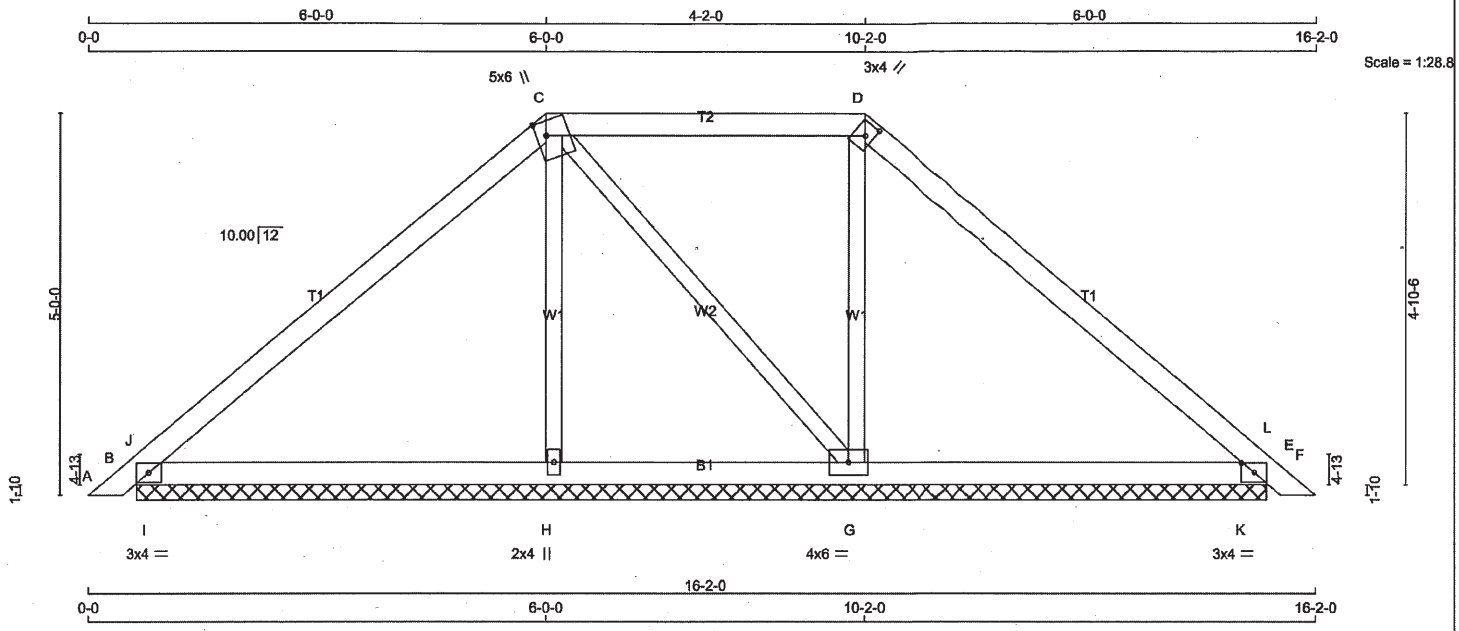

TOTAL WEIGHT = 2 X 51 = 102 lb

LUMBER
N. L. G. A. RULES

CHORDS	SIZE		LUMBER	DESCR.
A - C	2x4	DRY	No.2	SPF
C - D	2x4	DRY	No.2	SPF
D - F	2x4	DRY	No.2	SPF
B - E	2x4	DRY	No.2	SPF
ALL WEBS	2x3	DRY	No.2	SPF

DRY: SEASONED LUMBER.

PLATES (table is in inches)

JT	TYPE	PLATES	W	LEN	Y	X
B	TMB1-I	MT20	3.0	4.0		
C	TTWW+m	MT20	5.0	6.0	2.25	1.50
D	TTW+h	MT20	3.0	4.0	2.00	1.25
E	TMB1-I	MT20	3.0	4.0	1.50	2.00
G	BMWW1-t	MT20	4.0	6.0		
H	BMW1+w	MT20	2.0	4.0		

NOTES-
1) Lateral braces to be a minimum of 2X4 SPF #2.

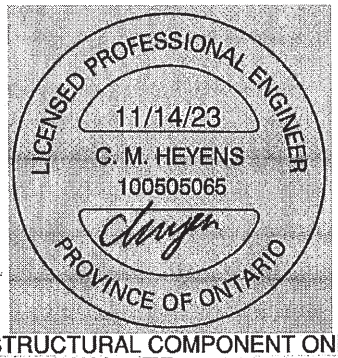

STRUCTURAL COMPONENT ONLY
DWG # TR23111107

DIMENSIONS, SUPPORTS AND LOADINGS SPECIFIED BY FABRICATOR TO BE VERIFIED BY BUILDING DESIGNER

BEARINGS

JT	FACTORED GROSS REACTION VERT	HORZ	MAXIMUM FACTORED GROSS REACTION DOWN	HORZ	UPLIFT	INPUT BRG IN-SX	REQRD BRG IN-SX
B	707	0	707	0	0	14-10-9	1-8
E	664	0	664	0	0	14-10-9	1-8
H	408	0	408	0	0	14-10-9	1-8
G	568	0	568	0	0	14-10-9	1-8

UNFACTORED REACTIONS

JT	1ST LCASE COMBINED	MAX./MIN. COMPONENT REACTIONS SNOW	LIVE	PERM.LIVE	WIND	DEAD	SOIL
B	489	383 / 0	0 / 0	0 / 0	0 / 0	106 / 0	0 / 0
E	460	357 / 0	0 / 0	0 / 0	0 / 0	103 / 0	0 / 0
H	288	192 / 0	0 / 0	0 / 0	0 / 0	96 / 0	0 / 0
G	397	290 / 0	0 / 0	0 / 0	0 / 0	107 / 0	0 / 0

BEARING MATERIAL TO BE SPF NO.2 OR BETTER AT JOINT(S) B, E, H, G

BRACING
TOP CHORD TO BE SHEATHED OR MAX. PURLIN SPACING = 6.25 FT.
MAX. UNBRACED BOTTOM CHORD LENGTH = 10.00 FT OR RIGID CEILING DIRECTLY APPLIED.

ALL PITCH BREAKS AND PERIMETER CORNER JOINTS MUST BE LATERALLY RESTRAINED.

LOADING
TOTAL LOAD CASES: (4)

CHORDS

MEMB. FR-TO	MAX. FACTORED FORCE (LBS)	FACTORED VERT. LOAD LC1 (PLF) FROM	TO	MAX CSI (LC)	MAX. UNBRAC LENGTH
A- B	0 / 21	-129.7	-129.7	0.03 (1)	10.00
B- J	-73 / 127	-129.7	-129.7	0.28 (1)	6.25
J- C	-418 / 0	-129.7	-129.7	0.47 (1)	6.25
C- D	-244 / 0	-129.7	-129.7	0.39 (1)	6.25
D- L	-353 / 0	-129.7	-129.7	0.47 (1)	6.25
L- E	-66 / 198	-129.7	-129.7	0.29 (1)	6.25
E- F	0 / 21	-129.7	-129.7	0.03 (1)	10.00
B- I	0 / 302	-18.5	-18.5	0.40 (1)	10.00
I- H	0 / 302	-18.5	-18.5	0.40 (1)	10.00
H- G	0 / 296	-18.5	-18.5	0.20 (1)	10.00
G- K	0 / 252	-18.5	-18.5	0.40 (1)	10.00
K- E	0 / 252	-18.5	-18.5	0.40 (1)	10.00

WEBS

MEMB. FR-TO	MAX. FACTORED FORCE (LBS)	MAX CSI (LC)
H- C	-253 / 0	0.09 (1)
C- G	-79 / 0	0.05 (1)
G- D	-354 / 0	0.12 (1)
I- J	-1084 / 0	0.00 (1)
K- L	-1093 / 0	0.00 (1)

DESIGN CRITERIA

SPECIFIED LOADS:

TOP CH.	LL	=	38.3	PSF
	DL	=	6.0	PSF
BOT CH.	LL	=	0.0	PSF
	DL	=	7.4	PSF
TOTAL LOAD		=	51.6	PSF

SPACING = 24.0 IN. C/C

LOADING IN FLAT SECTION BASED ON A SLOPE OF 6.00/12

THIS TRUSS IS DESIGNED FOR RESIDENTIAL OR SMALL BUILDING REQUIREMENTS OF PART 9, NBCC 2015

THIS DESIGN COMPLIES WITH:
- PART 9 OF BCBC 2018 , NBC-2019AE
- PART 9 OF OBC 2012 (2019 AMENDMENT)
- CSA 086-14
- TPIC 2014

(55 % OF 54.4 P.S.F. G.S.L. PLUS 8.4 P.S.F. RAIN LOAD) EQUALS 38.3 P.S.F. SPECIFIED ROOF LIVE LOAD

CSI: TC=0.47/1.00 (C-J:1) , BC=0.40/1.00 (B-I:1) , WB=0.12/1.00 (D-G:1) , SSI=0.84/1.00 (E-K:1)

DOL LUMBER=1.00 NAIL=1.00 LS BEND=1.10 COMP=1.10 SHEAR=1.10 TENS= 1.10

COMPANION LIVE LOAD FACTOR = 1.00

TRUSS PLATE MANUFACTURER IS NOT RESPONSIBLE FOR QUALITY CONTROL IN THE TRUSS MANUFACTURING PLANT .

NAIL VALUES

PLATE	GRIP(DRY) (PSI) MAX	MIN	SHEAR (PLI) MAX	MIN	SECTION (PLI) MAX	MIN
MT20	650	371	1747	788	1987	1873

PLATE PLACEMENT TOL. = 0.250 inches

PLATE ROTATION TOL. = 5.0 Deg.

JSI GRIP= 0.58 (B) (INPUT = 0.90)
JSI METAL= 0.16 (B) (INPUT = 1.00)

JOB NAME	TRUSS NAME	QUANTITY	PLY	JOB DESC.	DRWG NO.
418649	J1	20	1	BAYVIEW WELLINGTON TRUSS DESC.	

Tamarack Roof Truss, Burlington

Version 8.630 S Aug 30 2023 MiTek Industries, Inc. Tue Nov 14 11:14:26 2023 Page 1
ID:UaoF4umx8QMX1bo7Q0Zg7Cya5EO-T5UbbWONwGHoTcudt0X9KzZhHZOpZLSyjs UP0yJIQR

Scale = 1:36.1

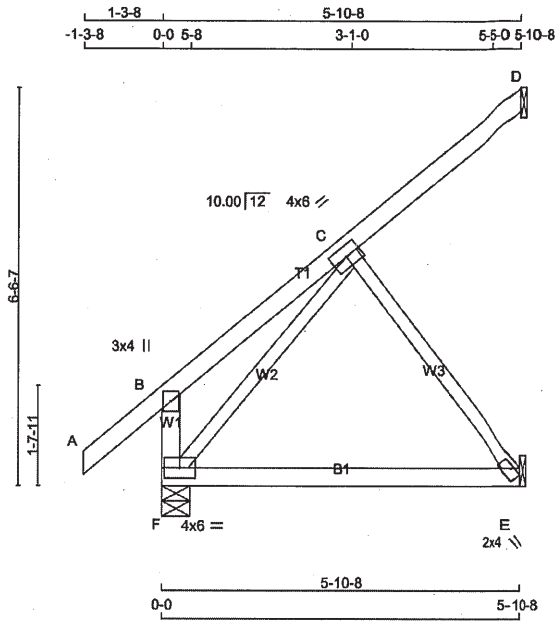

TOTAL WEIGHT = 20 X 26 = 525 lb [M]

LUMBER
N. L. G. A. RULES

CHORDS	SIZE		LUMBER	DESCR.
F - B	2x4	DRY	No.2	SPF
A - D	2x4	DRY	No.2	SPF
F - E	2x4	DRY	No.2	SPF
ALL WEBS	2x3	DRY	No.2	SPF

DRY: SEASONED LUMBER.

PLATES (table is in Inches)

JT	TYPE	PLATES	W	LEN	Y	X
B	TMV+p	MT20	3.0	4.0		
C	TMWW-t	MT20	4.0	6.0		
E	BMW1+w	MT20	2.0	4.0		Edge
F	BMVW1-t	MT20	4.0	6.0		

Edge - INDICATES REFERENCE CORNER OF PLATE TOUCHES EDGE OF CHORD.

NOTES-
1) Lateral braces to be a minimum of 2X4 SPF #2.

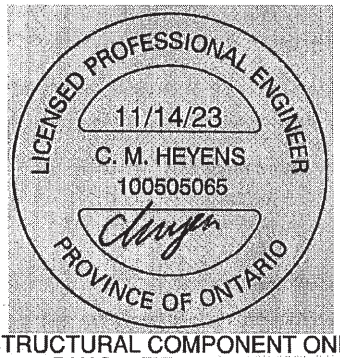

STRUCTURAL COMPONENT ONLY
DWG # TR23111058

DIMENSIONS, SUPPORTS AND LOADINGS SPECIFIED BY FABRICATOR TO BE VERIFIED BY BUILDING DESIGNER

BEARINGS

JT	FACTORED GROSS REACTION VERT	HORZ	MAXIMUM FACTORED GROSS REACTION DOWN	HORZ	UPLIFT	INPUT BRG IN-SX	REQRD BRG IN-SX
F	608	0	608	0	0	5-8	1-8
D	144	0	144	0	0	1-8	1-8
E	296	0	296	0	0	1-8	1-8

SEE MITEK STANDARD DETAIL MSD2015-H FOR CONNECTION TO JOINT(S) D , E

UNFACTORED REACTIONS

JT	1ST LCASE COMBINED	MAX./MIN. COMPONENT REACTIONS SNOW	LIVE	PERM.LIVE	WIND	DEAD	SOIL
F	421	327 / 0	0 / 0	0 / 0	0 / 0	94 / 0	0 / 0
D	98	85 / 0	0 / 0	0 / 0	0 / 0	13 / 0	0 / 0
E	208	143 / 0	0 / 0	0 / 0	0 / 0	65 / 0	0 / 0

BEARING MATERIAL TO BE SPF NO.2 OR BETTER AT JOINT(S) F, D

BRACING
TOP CHORD TO BE SHEATHED OR MAX. PURLIN SPACING = 6.25 FT.
MAX. UNBRACED BOTTOM CHORD LENGTH = 10.00 FT OR RIGID CEILING DIRECTLY APPLIED.

ALL PITCH BREAKS AND PERIMETER CORNER JOINTS MUST BE LATERALLY RESTRAINED.

LOADING
TOTAL LOAD CASES: (4)

CHORDS

MEMB. FR-TO	MAX. FACTORED FORCE (LBS)	FACTORED VERT. LOAD (PLF) FROM	TO	LC1 MAX CSI (LC)	MAX. UNBRAC LENGTH
F- B	-325 / 0	0.0	0.0	0.03 (1)	7.81
A- B	0 / 58	-129.7	-129.7	0.18 (1)	10.00
B- C	0 / 29	-129.7	-129.7	0.19 (1)	10.00
C- D	-29 / 0	-129.7	-129.7	0.18 (1)	6.25
F- E	0 / 180	-18.5	-18.5	0.18 (4)	10.00

WEBS

MEMB. FR-TO	MAX. FACTORED FORCE (LBS)	MAX CSI (LC)
C- E	-302 / 0	0.12 (1)
F- C	-292 / 0	0.11 (1)

DESIGN CRITERIA

SPECIFIED LOADS:

TOP CH.	LL	=	38.3	PSF
	DL	=	6.0	PSF
BOT CH.	LL	=	0.0	PSF
	DL	=	7.4	PSF
TOTAL LOAD		=	51.6	PSF

SPACING = 24.0 IN. C/C

THIS TRUSS IS DESIGNED FOR RESIDENTIAL OR SMALL BUILDING REQUIREMENTS OF PART 9, NBCC 2015

THIS DESIGN COMPLIES WITH:
- PART 9 OF BCBC 2018 , NBC-2019AE
- PART 9 OF OBC 2012 (2019 AMENDMENT)
- CSA 086-14
- TPIC 2014

(55 % OF 54.4 P.S.F. G.S.L. PLUS 8.4 P.S.F. RAIN LOAD) EQUALS 38.3 P.S.F. SPECIFIED ROOF LIVE LOAD

ALLOWABLE DEFL.(TL)= L/360 (0.19")
CALCULATED VERT. DEFL.(TL) = L/ 999 (0.05")

CSI: TC=0.19/1.00 (B-C:1) , BC=0.18/1.00 (E-F:4) , WB=0.12/1.00 (C-E:1) , SSI=0.14/1.00 (B-C:1)

DOL LUMBER=1.00 NAIL=1.00 LS BEND=1.10 COMP=1.10 SHEAR=1.10 TENS= 1.10

COMPANION LIVE LOAD FACTOR = 1.00

AUTOSOLVE RIGHT HEEL ONLY

TRUSS PLATE MANUFACTURER IS NOT RESPONSIBLE FOR QUALITY CONTROL IN THE TRUSS MANUFACTURING PLANT .

NAIL VALUES

PLATE	GRIP(DRY) (PSI) MAX	MIN	SHEAR (PLI) MAX	MIN	SECTION (PLI) MAX	MIN
MT20	650	371	1747	788	1987	1873

PLATE PLACEMENT TOL. = 0.250 Inches

PLATE ROTATION TOL. = 5.0 Deg.

JSI GRIP= 0.37 (E) (INPUT = 0.90)
JSI METAL= 0.14 (E) (INPUT = 1.00)

JOB NAME	TRUSS NAME	QUANTITY	PLY	JOB DESC.	DRWG NO.
418650	J1S	8	1	BAYVIEW WELLINGTON TRUSS DESC.	

Tamarack Roof Truss, Burlington

Version 8.630 S Aug 30 2023 MiTek Industries, Inc. Tue Nov 14 11:44:47 2023 Page 1
ID:UaoF4umx8QMX1bo7Q0Zq7Cya5EO-eQ00nAQd3miQRScb2yiBe_UqsdpukT_SqbKqzyJI

Scale = 1:35.6

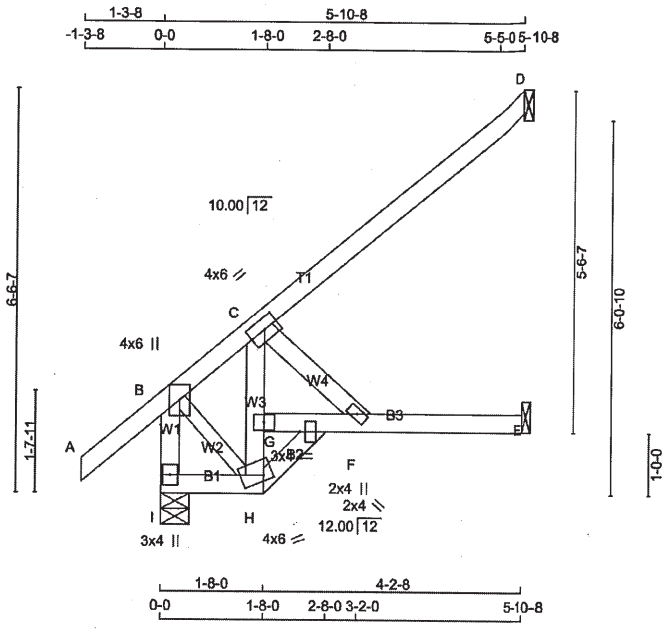

TOTAL WEIGHT = 8 X 27 = 217 lb

[M]

LUMBER

N. L. G. A. RULES

CHORDS	SIZE		LUMBER	DESCR.
I - B	2x4	DRY	No.2	SPF
A - D	2x4	DRY	No.2	SPF
I - H	2x4	DRY	No.2	SPF
G - E	2x4	DRY	No.2	SPF
ALL WEBS EXCEPT	2x4	DRY	No.2	SPF
B - H	2x3	DRY	No.2	SPF

DRY: SEASONED LUMBER.

PLATES (table is in inches)

JT	TYPE	PLATES	W	LEN	Y	X
B	TMVW+p	MT20	4.0	6.0	Edge	
C	TMWW-t	MT20	4.0	6.0	2.00	2.75
F	BMW+w	MT20	2.0	4.0		
G	BWM-I	MT20	3.0	4.0		
H						
H						
H	BBWW-m	MT20	4.0	6.0	1.00	1.75
I	BMV1+p	MT20	3.0	4.0		
J	NP+p	MT20	2.0	4.0	2.00	1.00

Edge - INDICATES REFERENCE CORNER OF PLATE TOUCHES EDGE OF CHORD.

NOTES-

1) Lateral braces to be a minimum of 2X4 SPF #2.

LICENSED PROFESSIONAL ENGINEER
11/14/23
C. M. HEYENS
100505065
PROVINCE OF ONTARIO

STRUCTURAL COMPONENT ONLY
DWG # TR23111099

DIMENSIONS, SUPPORTS AND LOADINGS SPECIFIED BY FABRICATOR TO BE VERIFIED BY BUILDING DESIGNER

BEARINGS

JT	FACTORED GROSS REACTION VERT	HORZ	MAXIMUM FACTORED GROSS REACTION DOWN	HORZ	UPLIFT	INPUT BRG IN-SX	REQRD BRG IN-SX
I	636	0	636	0	0	5-8	1-8
D	266	0	266	0	0	1-8	1-8
E.	148	0	148	0	0	1-8	1-8

SEE MITEK STANDARD DETAIL MSD2015-H FOR CONNECTION TO JOINT(S) D , E

UNFACTORED REACTIONS

JT	1ST LCASE COMBINED	MAX./MIN. COMPONENT REACTIONS SNOW	LIVE	PERM.LIVE	WIND	DEAD	SOIL
I	440	343 / 0	0 / 0	0 / 0	0 / 0	97 / 0	0 / 0
D	182	153 / 0	0 / 0	0 / 0	0 / 0	29 / 0	0 / 0
E	107	59 / 0	0 / 0	0 / 0	0 / 0	48 / 0	0 / 0

BEARING MATERIAL TO BE SPF NO.2 OR BETTER AT JOINT(S) I

BRACING

TOP CHORD TO BE SHEATHED OR MAX. PURLIN SPACING = 6.25 FT.
MAX. UNBRACED BOTTOM CHORD LENGTH = 10.00 FT OR RIGID CEILING DIRECTLY APPLIED.

MAX. UNBRACED INTERIOR CHORD LENGTH = 7.81 FT

ALL PITCH BREAKS AND PERIMETER CORNER JOINTS MUST BE LATERALLY RESTRAINED.

LOADING

TOTAL LOAD CASES: (4)

CHORDS

MEMB. FR-TO	MAX. FACTORED FORCE (LBS)	FACTORED VERT. LOAD (PLF) FROM	TO	LC1	MAX CSI (LC)	MAX. UNBRAC LENGTH
I- B	-622 / 0	0.0	0.0		0.07 (1)	7.81
A- B	0 / 58	-129.7	-129.7		0.18 (1)	10.00
B- C	-260 / 0	-129.7	-129.7		0.17 (1)	6.25
C- D	-10 / 3	-129.7	-129.7		0.37 (1)	6.25
I- H	0 / 0	-18.5	-18.5		0.01 (4)	10.00
G- F	0 / 298	-18.5	-18.5		0.50 (1)	10.00
F- E	0 / 0	-18.5	-18.5		0.45 (1)	10.00

WEBS

MEMB. FR-TO	MAX. FACTORED FORCE (LBS)	MAX CSI (LC)
H- G	-142 / 0	0.25 (1)
G- C	0 / 75	0.26 (1)
B- H	0 / 240	0.05 (1)
C- F	-413 / 0	0.05 (1)

DESIGN CRITERIA

SPECIFIED LOADS:

TOP CH.	LL	=	38.3	PSF
	DL	=	6.0	PSF
BOT CH.	LL	=	0.0	PSF
	DL	=	7.4	PSF
TOTAL LOAD		=	51.6	PSF

SPACING = 24.0 IN. C/C

THIS TRUSS IS DESIGNED FOR RESIDENTIAL OR SMALL BUILDING REQUIREMENTS OF PART 9, NBCC 2015

THIS DESIGN COMPLIES WITH:
- PART 9 OF BCBC 2018 , NBC-2019AE
- PART 9 OF OBC 2012 (2019 AMENDMENT)
- CSA 086-14
- TPIC 2014

DESIGN ASSUMPTIONS
-OVERHANG NOT TO BE ALTERED OR CUT OFF.

(55 % OF 54.4 P.S.F. G.S.L. PLUS 8.4 P.S.F. RAIN LOAD) EQUALS 38.3 P.S.F. SPECIFIED ROOF LIVE LOAD

ALLOWABLE DEFL.(LL)= L/360 (0.20")
CALCULATED VERT. DEFL.(LL) = L/ 816 (0.09")
ALLOWABLE DEFL.(TL)= L/360 (0.20")
CALCULATED VERT. DEFL.(TL) = L/ 443 (0.16")

CSI: TC=0.37/1.00 (C-D:1) , BC=0.50/1.00 (F-G:1) , WB=0.26/1.00 (C-G:1) , SSI=0.18/1.00 (C-D:1)

DOL LUMBER=1.00 NAIL=1.00 LS BEND=1.10 COMP=1.10 SHEAR=1.10 TENS= 1.10

COMPANION LIVE LOAD FACTOR = 1.00

AUTOSOLVE RIGHT HEEL ONLY

TRUSS PLATE MANUFACTURER IS NOT RESPONSIBLE FOR QUALITY CONTROL IN THE TRUSS MANUFACTURING PLANT .

NAIL VALUES

PLATE	GRIP(DRY) (PSI) MAX	MIN	SHEAR (PLI) MAX	MIN	SECTION (PLI) MAX	MIN
MT20	650	371	1747	788	1987	1873

PLATE PLACEMENT TOL. = 0.250 inches

PLATE ROTATION TOL. = 5.0 Deg.

JSI GRIP= 0.72 (H) (INPUT = 0.90)
JSI METAL= 0.21 (F) (INPUT = 1.00)

JOB NAME	TRUSS NAME	QUANTITY	PLY	JOB DESC.	DRWG NO.
418649	J2	1	1	BAYVIEW WELLINGTON TRUSS DESC.	

Tamarack Roof Truss, Burlington

Version 8.630 S Aug 30 2023 MiTek Industries, Inc. Tue Nov 14 11:14:27 2023 Page 1
ID:UaoF4umx8QMX1bo7Q0Zq7Cya5EO-xH1zpsO?hZPf5mTpQj2OtB5lnzkwlpV5yWj1xSyJIQQ

Scale = 1:31.3

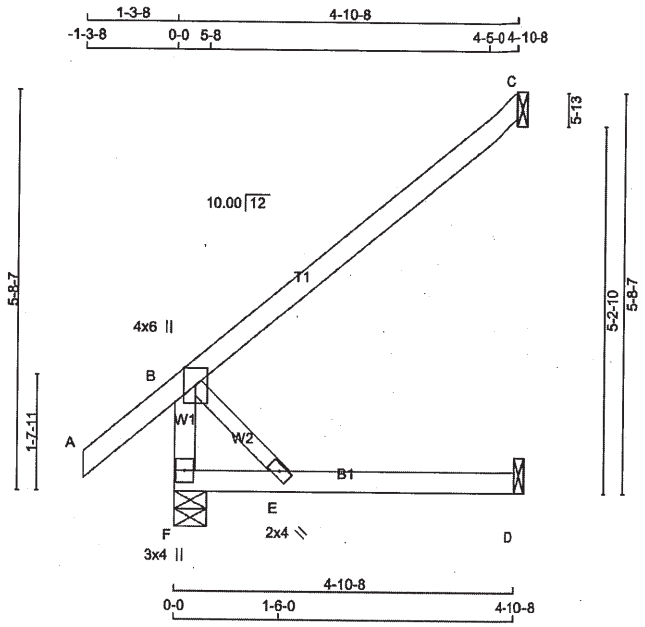

TOTAL WEIGHT = 18 lb [M]

LUMBER
N. L. G. A. RULES

CHORDS	SIZE		LUMBER	DESCR.
F - B	2x4	DRY	No.2	SPF
A - C	2x4	DRY	No.2	SPF
F - D	2x4	DRY	No.2	SPF
ALL WEBS	2x3	DRY	No.2	SPF

DRY: SEASONED LUMBER.

PLATES (table is in inches)

JT	TYPE	PLATES	W	LEN	Y	X
B	TMVW+p	MT20	4.0	6.0	Edge	
E	BMW+w	MT20	2.0	4.0		
F	BMV1+p	MT20	3.0	4.0		

Edge - INDICATES REFERENCE CORNER OF PLATE TOUCHES EDGE OF CHORD.

NOTES-
1) Lateral braces to be a minimum of 2X4 SPF #2.

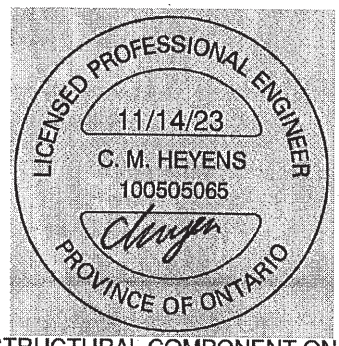

STRUCTURAL COMPONENT ONLY
DWG # TR23111059

DIMENSIONS, SUPPORTS AND LOADINGS SPECIFIED BY FABRICATOR TO BE VERIFIED BY BUILDING DESIGNER

BEARINGS

JT	FACTORED GROSS REACTION VERT	HORZ	MAXIMUM FACTORED GROSS REACTION DOWN	HORZ	UPLIFT	INPUT BRG IN-SX	REQRD BRG IN-SX
F	541	0	541	0	0	5-8	1-8
C	316	0	316	0	0	1-8	1-8
D	45	0	51	0	0	1-8	1-8

SEE MITEK STANDARD DETAIL MSD2015-H FOR CONNECTION TO JOINT(S) C , D

UNFACTORED REACTIONS

JT	1ST LCASE COMBINED	MAX./MIN. COMPONENT REACTIONS SNOW	LIVE	PERM.LIVE	WIND	DEAD	SOIL
F	374	292 / 0	0 / 0	0 / 0	0 / 0	82 / 0	0 / 0
C	216	186 / 0	0 / 0	0 / 0	0 / 0	29 / 0	0 / 0
D	36	0 / 0	0 / 0	0 / 0	0 / 0	36 / 0	0 / 0

BEARING MATERIAL TO BE SPF NO.2 OR BETTER AT JOINT(S) F

BRACING
TOP CHORD TO BE SHEATHED OR MAX. PURLIN SPACING = 10.00 FT.
MAX. UNBRACED BOTTOM CHORD LENGTH = 10.00 FT OR RIGID CEILING DIRECTLY APPLIED.

ALL PITCH BREAKS AND PERIMETER CORNER JOINTS MUST BE LATERALLY RESTRAINED.

LOADING
TOTAL LOAD CASES: (4)

CHORDS

MEMB. FR-TO	MAX. FACTORED FORCE (LBS)	FACTORED VERT. LOAD (PLF) FROM	TO	LC1 MAX CSI (LC)	MAX. UNBRAC LENGTH
F- B	-496 / 0	0.0	0.0	0.05 (1)	7.81
A- B	0 / 58	-129.7	-129.7	0.18 (1)	10.00
B- C	0 / 0	-129.7	-129.7	0.52 (1)	10.00
F- E	0 / 0	-18.5	-18.5	0.11 (4)	10.00
E- D	0 / 0	-18.5	-18.5	0.13 (4)	10.00

WEBS

MEMB. FR-TO	MAX. FACTORED FORCE (LBS)	MAX CSI (LC)
B- E	0 / 0	0.00 (1)

DESIGN CRITERIA

SPECIFIED LOADS:

TOP CH.	LL =	38.3	PSF
	DL =	6.0	PSF
BOT CH.	LL =	0.0	PSF
	DL =	7.4	PSF
TOTAL LOAD	=	51.6	PSF

SPACING = 24.0 IN. C/C

THIS TRUSS IS DESIGNED FOR RESIDENTIAL OR SMALL BUILDING REQUIREMENTS OF PART 9, NBCC 2015

THIS DESIGN COMPLIES WITH:
- PART 9 OF BCBC 2018 , NBC-2019AE
- PART 9 OF OBC 2012 (2019 AMENDMENT)
- CSA 086-14
- TPIC 2014

(55 % OF 54.4 P.S.F. G.S.L. PLUS 8.4 P.S.F. RAIN LOAD) EQUALS 38.3 P.S.F. SPECIFIED ROOF LIVE LOAD

ALLOWABLE DEFL.(LL)= L/360 (0.19")
CALCULATED VERT. DEFL.(LL) = L/ 999 (0.00")
ALLOWABLE DEFL.(TL)= L/360 (0.19")
CALCULATED VERT. DEFL.(TL) = L/ 999 (0.03")

CSI: TC=0.52/1.00 (B-C:1) , BC=0.13/1.00 (D-E:4) , WB=0.00/1.00 (B-E:1) , SSI=0.19/1.00 (B-C:1)

DOL LUMBER=1.00 NAIL=1.00 LS BEND=1.10 COMP=1.10 SHEAR=1.10 TENS= 1.10

COMPANION LIVE LOAD FACTOR = 1.00

TRUSS PLATE MANUFACTURER IS NOT RESPONSIBLE FOR QUALITY CONTROL IN THE TRUSS MANUFACTURING PLANT .

NAIL VALUES

PLATE	GRIP(DRY) (PSI) MAX	MIN	SHEAR (PLI) MAX	MIN	SECTION (PLI) MAX	MIN
MT20	650	371	1747	788	1987	1873

PLATE PLACEMENT TOL. = 0.250 inches

PLATE ROTATION TOL. = 5.0 Deg.

JSI GRIP= 0.31 (B) (INPUT = 0.90)
JSI METAL= 0.13 (B) (INPUT = 1.00)

JOB NAME	TRUSS NAME	QUANTITY	PLY	JOB DESC.	DRWG NO.
418649	J3	1	1	BAYVIEW WELLINGTON TRUSS DESC.	

Tamarack Roof Truss, Burlington

Version 8.630 S Aug 30 2023 MiTek Industries, Inc. Tue Nov 14 11:14:28 2023 Page 1
ID:UaoF4umx8QMX1bo7Q0Zq7Cya5EO-PUbL0BPdStXWiv2? RZdQOe?eN4y1GkFAATaTuyJIQP

Scale = 1:18.3

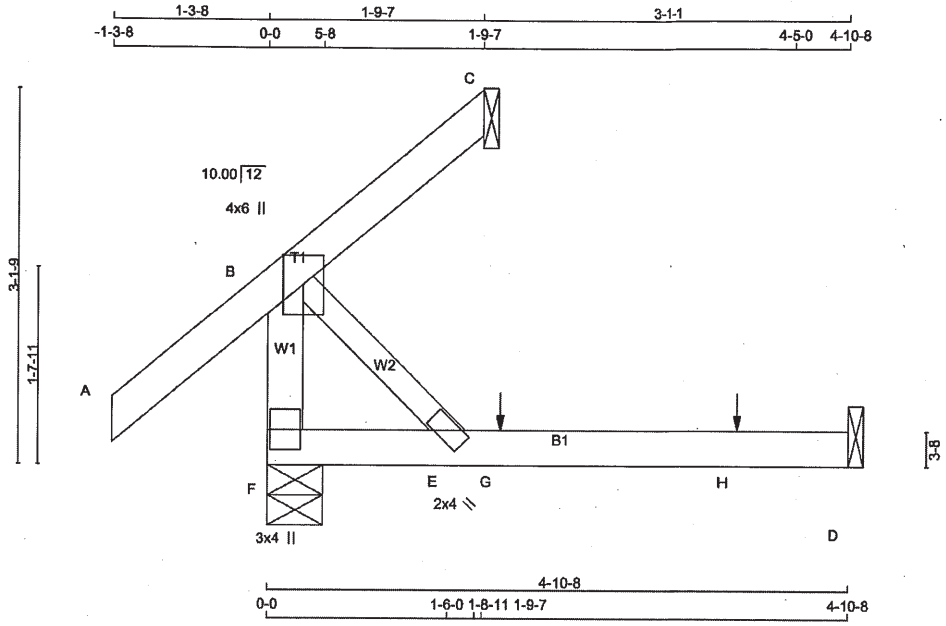

TOTAL WEIGHT = 13 lb [M]

LUMBER
N. L. G. A. RULES

CHORDS	SIZE		LUMBER	DESCR.
F - B	2x4	DRY	No.2	SPF
A - C	2x4	DRY	No.2	SPF
F - D	2x4	DRY	No.2	SPF
ALL WEBS	2x3	DRY	No.2	SPF

DRY: SEASONED LUMBER.

PLATES (table is in inches)

JT	TYPE	PLATES	W	LEN	Y	X
B	TMVW+p	MT20	4.0	6.0	Edge	
E	BMW+w	MT20	2.0	4.0		
F	BMV1+p	MT20	3.0	4.0		

Edge - INDICATES REFERENCE CORNER OF PLATE TOUCHES EDGE OF CHORD.

NOTES-
1) Lateral braces to be a minimum of 2X4 SPF #2.

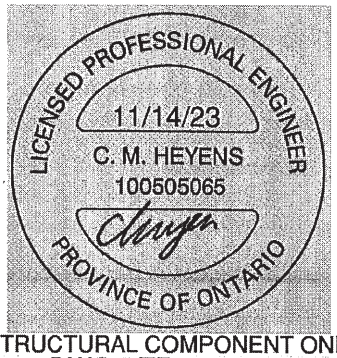

STRUCTURAL COMPONENT ONLY
DWG # TR23111060

DIMENSIONS, SUPPORTS AND LOADINGS SPECIFIED BY FABRICATOR TO BE VERIFIED BY BUILDING DESIGNER

BEARINGS

JT	FACTORED GROSS REACTION VERT	HORZ	MAXIMUM FACTORED GROSS REACTION DOWN	HORZ	UPLIFT	INPUT BRG IN-SX	REQRD BRG IN-SX
F	410	0	410	0	0	5-8	1-8
C	46	0	46	0	0	1-8	1-8
D	45	0	51	0	0	1-8	1-8

SEE MITEK STANDARD DETAIL MSD2015-H FOR CONNECTION TO JOINT(S) C , D

UNFACTORED REACTIONS

JT	1ST LCASE COMBINED	MAX./MIN. COMPONENT REACTIONS SNOW	LIVE	PERM.LIVE	WIND	DEAD	SOIL
F	285	215 / 0	0 / 0	0 / 0	0 / 0	70 / 0	0 / 0
C	32	27 / 0	0 / 0	0 / 0	0 / 0	4 / 0	0 / 0
D	36	0 / 0	0 / 0	0 / 0	0 / 0	36 / 0	0 / 0

BEARING MATERIAL TO BE SPF NO.2 OR BETTER AT JOINT(S) F, C

BRACING
TOP CHORD TO BE SHEATHED OR MAX. PURLIN SPACING = 6.25 FT.
MAX. UNBRACED BOTTOM CHORD LENGTH = 10.00 FT OR RIGID CEILING DIRECTLY APPLIED.

ALL PITCH BREAKS AND PERIMETER CORNER JOINTS MUST BE LATERALLY RESTRAINED.

LOADING
TOTAL LOAD CASES: (4)

CHORDS

MEMB. FR-TO	MAX. FACTORED FORCE (LBS)	FACTORED VERT. LOAD (PLF) FROM	TO	LC1 MAX CSI (LC)	MAX. UNBRAC LENGTH
F- B	-365 / 0	0.0	0.0	0.04 (1)	7.81
A- B	0 / 58	-129.7	-129.7	0.20 (1)	10.00
B- C	-45 / 0	-129.7	-129.7	0.19 (1)	6.25
F- E	0 / 0	-18.5	-18.5	0.12 (4)	10.00
E- G	0 / 0	-18.5	-18.5	0.14 (4)	10.00
G- H	0 / 0	-18.5	-18.5	0.14 (4)	10.00
H- D	0 / 0	-18.5	-18.5	0.14 (4)	10.00

WEBS

MEMB. FR-TO	MAX. FACTORED FORCE (LBS)	MAX CSI (LC)
B- E	0 / 0	0.00 (1)

SPECIFIED CONCENTRATED LOADS (LBS)

JT	LOC.	LC1	MAX-	MAX+	FACE	DIR.	TYPE	HEEL	CONN.
G	1-11-4	1	1	---	FRONT	VERT	TOTAL	---	C1
H	3-11-4	1	1	---	FRONT	VERT	TOTAL	---	C1

CONNECTION REQUIREMENTS

1) **C1:** A SUITABLE HANGER/MECHANICAL CONNECTION IS REQUIRED.

DESIGN CRITERIA

SPECIFIED LOADS:

TOP CH.	LL	=	38.3	PSF
	DL	=	6.0	PSF
BOT CH.	LL	=	0.0	PSF
	DL	=	7.4	PSF
TOTAL LOAD		=	51.6	PSF

SPACING = 24.0 IN. C/C

THIS TRUSS IS DESIGNED FOR RESIDENTIAL OR SMALL BUILDING REQUIREMENTS OF PART 9, NBCC 2015

THIS DESIGN COMPLIES WITH:
- PART 9 OF BCBC 2018 , NBC-2019AE
- PART 9 OF OBC 2012 (2019 AMENDMENT)
- CSA 086-14
- TPIC 2014

DESIGN ASSUMPTIONS
-OVERHANG NOT TO BE ALTERED OR CUT OFF.

(55 % OF 54.4 P.S.F. G.S.L. PLUS 8.4 P.S.F. RAIN LOAD) EQUALS 38.3 P.S.F. SPECIFIED ROOF LIVE LOAD

ALLOWABLE DEFL.(LL)= L/360 (0.19")
CALCULATED VERT. DEFL.(LL) = L/ 999 (0.00")
ALLOWABLE DEFL.(TL)= L/360 (0.19")
CALCULATED VERT. DEFL.(TL) = L/ 999 (0.03")

CSI: TC=0.20/1.00 (A-B:1) , BC=0.14/1.00 (D-E:4) , WB=0.00/1.00 (B-E:1) , SSI=0.12/1.00 (B-C:1)

DOL LUMBER=1.00 NAIL=1.00 LS BEND=1.00 COMP=1.00 SHEAR=1.00 TENS= 1.00

COMPANION LIVE LOAD FACTOR = 1.00

AUTOSOLVE RIGHT HEEL ONLY

TRUSS PLATE MANUFACTURER IS NOT RESPONSIBLE FOR QUALITY CONTROL IN THE TRUSS MANUFACTURING PLANT .

NAIL VALUES

PLATE	GRIP(DRY) (PSI) MAX	MIN	SHEAR (PLI) MAX	MIN	SECTION (PLI) MAX	MIN
MT20	650	371	1747	788	1987	1873

PLATE PLACEMENT TOL. = 0.250 inches

PLATE ROTATION TOL. = 5.0 Deg.

JSI GRIP= 0.23 (B) (INPUT = 0.90)
JSI METAL= 0.10 (B) (INPUT = 1.00)

JOB NAME	TRUSS NAME	QUANTITY	PLY	JOB DESC.	DRWG NO.
418649	J4	1	1	BAYVIEW WELLINGTON TRUSS DESC.	

Tamarack Roof Truss, Burlington

Version 8.630 S Aug 30 2023 MiTek Industries, Inc. Tue Nov 14 11:14:29 2023 Page 1
ID:UaoF4umx8QMX1bo7Q0Zg7Cya5EO-tq9kEXQFCBfNK3dBY84sycB9WnQOmj_OPqC80LyJIQO

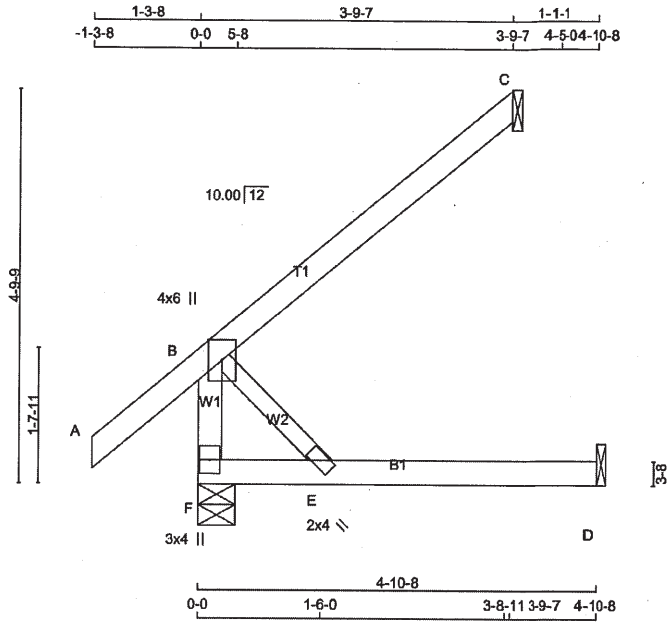

Scale = 1:26.7

TOTAL WEIGHT = 16 lb [M]

LUMBER
N. L. G. A. RULES

CHORDS	SIZE		LUMBER	DESCR.
F - B	2x4	DRY	No.2	SPF
A - C	2x4	DRY	No.2	SPF
F - D	2x4	DRY	No.2	SPF
ALL WEBS	2x3	DRY	No.2	SPF

DRY: SEASONED LUMBER.

PLATES (table is in inches)

JT	TYPE	PLATES	W	LEN	Y	X
B	TMVW+p	MT20	4.0	6.0	Edge	
E	BMW+w	MT20	2.0	4.0		
F	BMV1+p	MT20	3.0	4.0		

Edge - INDICATES REFERENCE CORNER OF PLATE TOUCHES EDGE OF CHORD.

NOTES-
1) Lateral braces to be a minimum of 2X4 SPF #2.

LICENSED PROFESSIONAL ENGINEER
11/14/23
C. M. HEYENS
100505065
PROVINCE OF ONTARIO

STRUCTURAL COMPONENT ONLY
DWG # TR23111061

DIMENSIONS, SUPPORTS AND LOADINGS SPECIFIED BY FABRICATOR TO BE VERIFIED BY BUILDING DESIGNER

BEARINGS

JT	FACTORED GROSS REACTION VERT	HORZ	MAXIMUM FACTORED GROSS REACTION DOWN	HORZ	UPLIFT	INPUT BRG IN-SX	REQRD BRG IN-SX
F	470	0	470	0	0	5-8	1-8
C	246	0	246	0	0	1-8	1-8
D	45	0	51	0	0	1-8	1-8

SEE MITEK STANDARD DETAIL MSD2015-H FOR CONNECTION TO JOINT(S) C , D

UNFACTORED REACTIONS

JT	1ST LCASE COMBINED	MAX./MIN. COMPONENT REACTIONS SNOW	LIVE	PERM.LIVE	WIND	DEAD	SOIL
F	326	251 / 0	0 / 0	0 / 0	0 / 0	75 / 0	0 / 0
C	168	145 / 0	0 / 0	0 / 0	0 / 0	23 / 0	0 / 0
D	36	0 / 0	0 / 0	0 / 0	0 / 0	36 / 0	0 / 0

BEARING MATERIAL TO BE SPF NO.2 OR BETTER AT JOINT(S) F, C

BRACING
TOP CHORD TO BE SHEATHED OR MAX. PURLIN SPACING = 10.00 FT.
MAX. UNBRACED BOTTOM CHORD LENGTH = 10.00 FT OR RIGID CEILING DIRECTLY APPLIED.

ALL PITCH BREAKS AND PERIMETER CORNER JOINTS MUST BE LATERALLY RESTRAINED.

LOADING
TOTAL LOAD CASES: (4)

CHORDS

MEMB. FR-TO	MAX. FACTORED FORCE (LBS)	FACTORED VERT. LOAD (PLF) FROM	TO	LC1	MAX CSI (LC)	MAX. UNBRAC LENGTH
F- B	-425 / 0	0.0	0.0		0.05 (1)	7.81
A- B	0 / 58	-129.7	-129.7		0.18 (1)	10.00
B- C	0 / 0	-129.7	-129.7		0.32 (1)	10.00
F- E	0 / 0	-18.5	-18.5		0.11 (4)	10.00
E- D	0 / 0	-18.5	-18.5		0.13 (4)	10.00

WEBS

MEMB. FR-TO	MAX. FACTORED FORCE (LBS)	MAX CSI (LC)
B- E	0 / 0	0.00 (1)

DESIGN CRITERIA

SPECIFIED LOADS:

TOP CH.	LL	=	38.3	PSF
	DL	=	6.0	PSF
BOT CH.	LL	=	0.0	PSF
	DL	=	7.4	PSF
TOTAL LOAD		=	51.6	PSF

SPACING = 24.0 IN. C/C

THIS TRUSS IS DESIGNED FOR RESIDENTIAL OR SMALL BUILDING REQUIREMENTS OF PART 9, NBCC 2015

THIS DESIGN COMPLIES WITH:
- PART 9 OF BCBC 2018 , NBC-2019AE
- PART 9 OF OBC 2012 (2019 AMENDMENT)
- CSA 086-14
- TPIC 2014

(55 % OF 54.4 P.S.F. G.S.L. PLUS 8.4 P.S.F. RAIN LOAD) EQUALS 38.3 P.S.F. SPECIFIED ROOF LIVE LOAD

ALLOWABLE DEFL.(LL)= L/360 (0.19")
CALCULATED VERT. DEFL.(LL) = L/ 999 (0.00")
ALLOWABLE DEFL.(TL)= L/360 (0.19")
CALCULATED VERT. DEFL.(TL) = L/ 999 (0.03")

CSI: TC=0.32/1.00 (B-C:1) , BC=0.13/1.00 (D-E:4) , WB=0.00/1.00 (B-E:1) , SSI=0.15/1.00 (B-C:1)

DOL LUMBER=1.00 NAIL=1.00 LS BEND=1.10 COMP=1.10 SHEAR=1.10 TENS= 1.10

COMPANION LIVE LOAD FACTOR = 1.00

AUTOSOLVE RIGHT HEEL ONLY

TRUSS PLATE MANUFACTURER IS NOT RESPONSIBLE FOR QUALITY CONTROL IN THE TRUSS MANUFACTURING PLANT .

NAIL VALUES

PLATE	GRIP(DRY) (PSI) MAX	MIN	SHEAR (PLI) MAX	MIN	SECTION (PLI) MAX	MIN
MT20	650	371	1747	788	1987	1873

PLATE PLACEMENT TOL. = 0.250 inches

PLATE ROTATION TOL. = 5.0 Deg.

JSI GRIP= 0.27 (B) (INPUT = 0.90)
JSI METAL= 0.11 (B) (INPUT = 1.00)

JOB NAME	TRUSS NAME	QUANTITY	PLY	JOB DESC.	DRWG NO.
418649	J5	7	1	BAYVIEW WELLINGTON TRUSS DESC.	

Tamarack Roof Truss, Burlington

Version 8.630 S Aug 30 2023 MiTek Industries, Inc. Tue Nov 14 11:14:30 2023 Page 1
ID:UaoF4umx8QMX1bo7Q0Zg7Cya5EO-Lsj6RtRuzUnEyDCO6sb5VpjMQAnKVAEYeUyhYnyJIQN

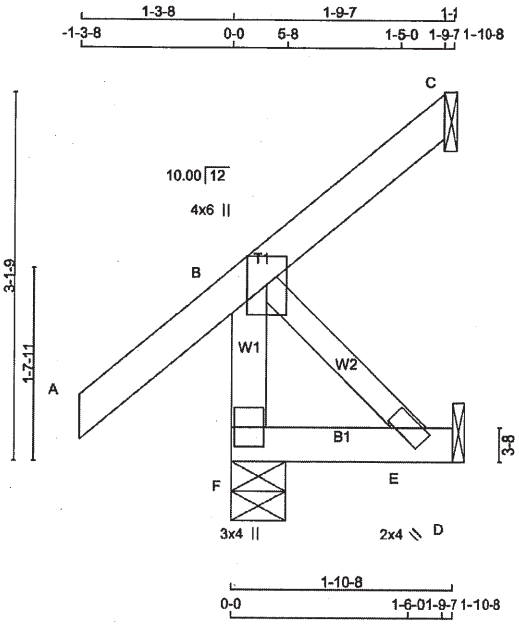

TOTAL WEIGHT = 7 X 10 = 69 lb

LUMBER
N. L. G. A. RULES

CHORDS	SIZE		LUMBER	DESCR.
F - B	2x4	DRY	No.2	SPF
A - C	2x4	DRY	No.2	SPF
F - D	2x4	DRY	No.2	SPF
ALL WEBS	2x3	DRY	No.2	SPF

DRY: SEASONED LUMBER.

PLATES (table is in Inches)

JT	TYPE	PLATES	W	LEN	Y	X
B	TMVW+p	MT20	4.0	6.0	Edge	
E	BMW+w	MT20	2.0	4.0		
F	BMV1+p	MT20	3.0	4.0		

Edge - INDICATES REFERENCE CORNER OF PLATE TOUCHES EDGE OF CHORD.

NOTES-
1) Lateral braces to be a minimum of 2X4 SPF #2.

LICENSED PROFESSIONAL ENGINEER
11/14/23
C. M. HEYENS
100505065
PROVINCE OF ONTARIO

STRUCTURAL COMPONENT ONLY
DWG # TR23111062

DIMENSIONS, SUPPORTS AND LOADINGS SPECIFIED BY FABRICATOR TO BE VERIFIED BY BUILDING DESIGNER

BEARINGS

JT	FACTORED GROSS REACTION VERT	HORZ	MAXIMUM FACTORED GROSS REACTION DOWN	HORZ	UPLIFT	INPUT BRG IN-SX	REQRD BRG IN-SX
F	383	0	383	0	0	5-8	1-8
C	46	0	46	0	-60	1-8	1-8
D	17	0	19	0	0	1-8	1-8

SEE MITEK STANDARD DETAIL MSD2015-H FOR CONNECTION TO JOINT(S) C , D

PROVIDE ANCHORAGE AT BEARING JOINT C FOR 150 LBS FACTORED UPLIFT

UNFACTORED REACTIONS

JT	1ST LCASE COMBINED	MAX./MIN. COMPONENT REACTIONS SNOW	LIVE	PERM.LIVE	WIND	DEAD	SOIL
F	263	215 / 0	0 / 0	0 / 0	0 / 0	48 / 0	0 / 0
C	32	27 / -41	0 / 0	0 / 0	0 / 0	4 / 0	0 / 0
D	14	0 / 0	0 / 0	0 / 0	0 / 0	14 / 0	0 / 0

BEARING MATERIAL TO BE SPF NO.2 OR BETTER AT JOINT(S) F, C

BRACING
TOP CHORD TO BE SHEATHED OR MAX. PURLIN SPACING = 6.25 FT.
MAX. UNBRACED BOTTOM CHORD LENGTH = 10.00 FT OR RIGID CEILING DIRECTLY APPLIED.

ALL PITCH BREAKS AND PERIMETER CORNER JOINTS MUST BE LATERALLY RESTRAINED.

LOADING
TOTAL LOAD CASES: (5)

CHORDS

MEMB. FR-TO	MAX. FACTORED FORCE (LBS)	FACTORED VERT. LOAD LC1 (PLF) FROM	TO	MAX CSI (LC)	MAX. UNBRAC LENGTH
F- B	-365 / 0	0.0	0.0	0.04 (1)	7.81
A- B	0 / 58	-129.7	-129.7	0.18 (1)	10.00
B- C	-45 / 0	-129.7	-129.7	0.17 (1)	6.25
F- E	0 / 0	-18.5	-18.5	0.02 (4)	10.00
E- D	0 / 0	-18.5	-18.5	0.01 (4)	10.00

WEBS

MEMB. FR-TO	MAX. FACTORED FORCE (LBS)	MAX CSI (LC)
B- E	0 / 0	0.00 (1)

CANTILEVER ANALYSIS HAS BEEN CONSIDERED IN THIS DESIGN

[M]

DESIGN CRITERIA

SPECIFIED LOADS:

TOP CH.	LL	=	38.3	PSF
	DL	=	6.0	PSF
BOT CH.	LL	=	0.0	PSF
	DL	=	7.4	PSF
TOTAL LOAD		=	51.6	PSF

SPACING = 24.0 IN. C/C

THIS TRUSS IS DESIGNED FOR RESIDENTIAL OR SMALL BUILDING REQUIREMENTS OF PART 9, NBCC 2015

THIS DESIGN COMPLIES WITH:
- PART 9 OF BCBC 2018 , NBC-2019AE
- PART 9 OF OBC 2012 (2019 AMENDMENT)
- CSA 086-14
- TPIC 2014

DESIGN ASSUMPTIONS
-OVERHANG NOT TO BE ALTERED OR CUT OFF.

(55 % OF 54.4 P.S.F. G.S.L. PLUS 8.4 P.S.F. RAIN LOAD) EQUALS 38.3 P.S.F. SPECIFIED ROOF LIVE LOAD

ALLOWABLE DEFL.(LL)= L/360 (0.19")
CALCULATED VERT. DEFL.(LL) = L/ 999 (0.00")
ALLOWABLE DEFL.(TL)= L/360 (0.19")
CALCULATED VERT. DEFL.(TL) = L/ 999 (0.00")

CSI: TC=0.18/1.00 (A-B:1) , BC=0.02/1.00 (E-F:4) , WB=0.00/1.00 (B-E:1) , SSI=0.11/1.00 (B-C:1)

DOL LUMBER=1.00 NAIL=1.00 LS BEND=1.10 COMP=1.10 SHEAR=1.10 TENS= 1.10

COMPANION LIVE LOAD FACTOR = 1.00

AUTOSOLVE RIGHT HEEL ONLY

TRUSS PLATE MANUFACTURER IS NOT RESPONSIBLE FOR QUALITY CONTROL IN THE TRUSS MANUFACTURING PLANT .

NAIL VALUES

PLATE	GRIP(DRY) (PSI) MAX	MIN	SHEAR (PLI) MAX	MIN	SECTION (PLI) MAX	MIN
MT20	650	371	1747	788	1987	1873

PLATE PLACEMENT TOL. = 0.250 Inches

PLATE ROTATION TOL. = 5.0 Deg.

JSI GRIP= 0.23 (B) (INPUT = 0.90)
JSI METAL= 0.10 (B) (INPUT = 1.00)

JOB NAME	TRUSS NAME	QUANTITY	PLY	JOB DESC.	DRWG NO.
418649	J6	7	1	BAYVIEW WELLINGTON TRUSS DESC.	

Tamarack Roof Truss, Burlington

Version 8.630 S Aug 30 2023 MiTek Industries, Inc. Tue Nov 14 11:14:31 2023 Page 1
ID:UaoF4umx8QMX1bo7Q0Zq7Cya5EO-p3HUeDRWkov5ZNnafZ6K11GV0a7ZEdUht8hF4DyJIQM

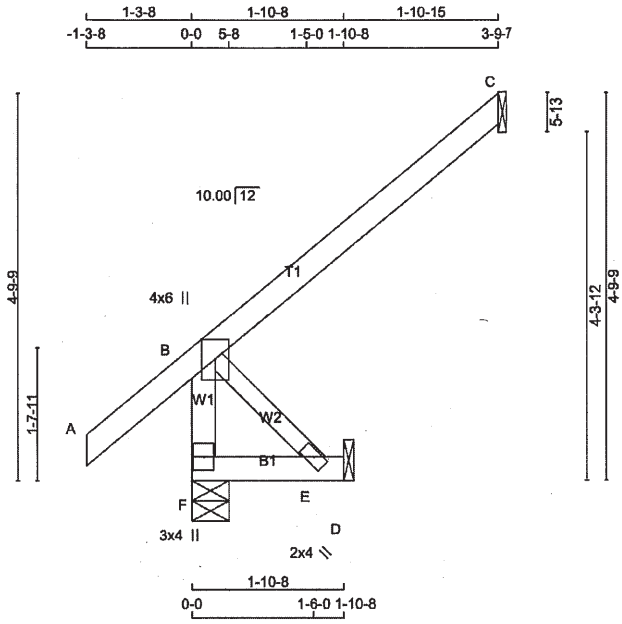

TOTAL WEIGHT = 7 X 13 = 90 lb

LUMBER
N. L. G. A. RULES

CHORDS	SIZE		LUMBER	DESCR.
F - B	2x4	DRY	No.2	SPF
A - C	2x4	DRY	No.2	SPF
F - D	2x4	DRY	No.2	SPF
ALL WEBS	2x3	DRY	No.2	SPF

DRY: SEASONED LUMBER.

PLATES (table is in inches)

JT	TYPE	PLATES	W	LEN	Y	X
B	TMVW+p	MT20	4.0	6.0	Edge	
E	BMW+w	MT20	2.0	4.0		
F	BMV1+p	MT20	3.0	4.0		

Edge - INDICATES REFERENCE CORNER OF PLATE TOUCHES EDGE OF CHORD.

NOTES-
1) Lateral braces to be a minimum of 2X4 SPF #2.

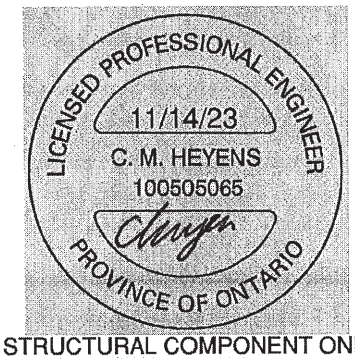

STRUCTURAL COMPONENT ONLY
DWG # TR23111063

DIMENSIONS, SUPPORTS AND LOADINGS SPECIFIED BY FABRICATOR TO BE VERIFIED BY BUILDING DESIGNER

BEARINGS

JT	FACTORED GROSS REACTION VERT	HORZ	MAXIMUM FACTORED GROSS REACTION DOWN	HORZ	UPLIFT	INPUT BRG IN-SX	REQRD BRG IN-SX
F	443	0	443	0	0	5-8	1-8
C	246	0	246	0	0	1-8	1-8
D	17	0	19	0	0	1-8	1-8

SEE MITEK STANDARD DETAIL MSD2015-H FOR CONNECTION TO JOINT(S) C , D

UNFACTORED REACTIONS

JT	1ST LCASE COMBINED	MAX./MIN. COMPONENT REACTIONS SNOW	LIVE	PERM.LIVE	WIND	DEAD	SOIL
F	304	251 / 0	0 / 0	0 / 0	0 / 0	53 / 0	0 / 0
C	168	145 / 0	0 / 0	0 / 0	0 / 0	23 / 0	0 / 0
D	14	0 / 0	0 / 0	0 / 0	0 / 0	14 / 0	0 / 0

BEARING MATERIAL TO BE SPF NO.2 OR BETTER AT JOINT(S) F

BRACING
TOP CHORD TO BE SHEATHED OR MAX. PURLIN SPACING = 10.00 FT.
MAX. UNBRACED BOTTOM CHORD LENGTH = 10.00 FT OR RIGID CEILING DIRECTLY APPLIED.

ALL PITCH BREAKS AND PERIMETER CORNER JOINTS MUST BE LATERALLY RESTRAINED.

LOADING
TOTAL LOAD CASES: (5)

CHORDS

MEMB. FR-TO	MAX. FACTORED FORCE (LBS)	FACTORED VERT. LOAD (PLF) FROM	TO	LC1 MAX CSI (LC)	MAX. UNBRAC LENGTH
F- B	-425 / 0	0.0	0.0	0.05 (1)	7.81
A- B	0 / 58	-129.7	-129.7	0.18 (1)	10.00
B- C	0 / 0	-129.7	-129.7	0.32 (1)	10.00
F- E	0 / 0	-18.5	-18.5	0.02 (4)	10.00
E- D	0 / 0	-18.5	-18.5	0.01 (4)	10.00

WEBS

MEMB. FR-TO	MAX. FACTORED FORCE (LBS)	MAX CSI (LC)
B- E	0 / 0	0.00 (1)

CANTILEVER ANALYSIS HAS BEEN CONSIDERED IN THIS DESIGN

[M]

DESIGN CRITERIA

SPECIFIED LOADS:

TOP CH.	LL	=	38.3	PSF
	DL	=	6.0	PSF
BOT CH.	LL	=	0.0	PSF
	DL	=	7.4	PSF
TOTAL LOAD		=	51.6	PSF

SPACING = 24.0 IN. C/C

THIS TRUSS IS DESIGNED FOR RESIDENTIAL OR SMALL BUILDING REQUIREMENTS OF PART 9, NBCC 2015

THIS DESIGN COMPLIES WITH:
- PART 9 OF BCBC 2018 , NBC-2019AE
- PART 9 OF OBC 2012 (2019 AMENDMENT)
- CSA 086-14
- TPIC 2014

(55 % OF 54.4 P.S.F. G.S.L. PLUS 8.4 P.S.F. RAIN LOAD) EQUALS 38.3 P.S.F. SPECIFIED ROOF LIVE LOAD

ALLOWABLE DEFL.(LL)= L/360 (0.19")
CALCULATED VERT. DEFL.(LL) = L/ 999 (0.00")
ALLOWABLE DEFL.(TL)= L/360 (0.19")
CALCULATED VERT. DEFL.(TL) = L/ 999 (0.00")

CSI: TC=0.32/1.00 (B-C:1) , BC=0.02/1.00 (E-F:4) , WB=0.00/1.00 (B-E:1) , SSI=0.15/1.00 (B-C:1)

DOL LUMBER=1.00 NAIL=1.00 LS BEND=1.10 COMP=1.10 SHEAR=1.10 TENS= 1.10

COMPANION LIVE LOAD FACTOR = 1.00

AUTOSOLVE RIGHT HEEL ONLY

TRUSS PLATE MANUFACTURER IS NOT RESPONSIBLE FOR QUALITY CONTROL IN THE TRUSS MANUFACTURING PLANT .

NAIL VALUES

PLATE	GRIP(DRY) (PSI) MAX	MIN	SHEAR (PLI) MAX	MIN	SECTION (PLI) MAX	MIN
MT20	650	371	1747	788	1987	1873

PLATE PLACEMENT TOL. = 0.250 inches

PLATE ROTATION TOL. = 5.0 Deg.

JSI GRIP= 0.27 (B) (INPUT = 0.90)
JSI METAL= 0.11 (B) (INPUT = 1.00)

JOB NAME	TRUSS NAME	QUANTITY	PLY	JOB DESC.	DRWG NO.
418649	J7	5	1	BAYVIEW WELLINGTON TRUSS DESC.	

Tamarack Roof Truss, Burlington

Version 8.630 S Aug 30 2023 MiTek Industries, Inc. Tue Nov 14 11:14:32 2023 Page 1
ID:UaoF4umx8QMX1bo7Q0Zg7Cya5EO-IFrssZS8V61yBXLmDHeZaEphe_Qtz4kq5oRocfyJIQL

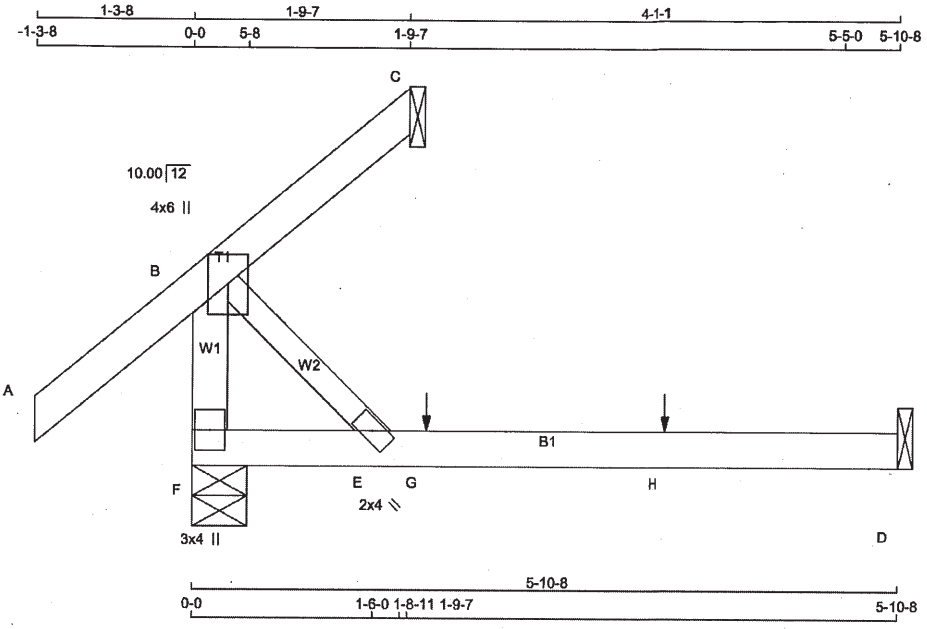

TOTAL WEIGHT = 5 X 14 = 72 lb [M]

LUMBER
N. L. G. A. RULES

CHORDS	SIZE		LUMBER	DESCR.
F - B	2x4	DRY	No.2	SPF
A - C	2x4	DRY	No.2	SPF
F - D	2x4	DRY	No.2	SPF
ALL WEBS	2x3	DRY	No.2	SPF

DRY: SEASONED LUMBER.

PLATES (table is in inches)

JT	TYPE	PLATES	W	LEN	Y	X
B	TMVW+p	MT20	4.0	6.0	Edge	
E	BMW+w	MT20	2.0	4.0		
F	BMV1+p	MT20	3.0	4.0		

Edge - INDICATES REFERENCE CORNER OF PLATE TOUCHES EDGE OF CHORD.

NOTES-
1) Lateral braces to be a minimum of 2X4 SPF #2.

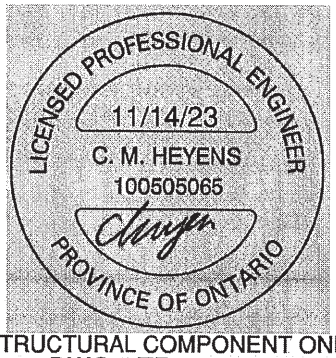

STRUCTURAL COMPONENT ONLY
DWG # TR23111064

DIMENSIONS, SUPPORTS AND LOADINGS SPECIFIED BY FABRICATOR TO BE VERIFIED BY BUILDING DESIGNER

BEARINGS

JT	FACTORED GROSS REACTION VERT	HORZ	MAXIMUM FACTORED GROSS REACTION DOWN	HORZ	UPLIFT	INPUT BRG IN-SX	REQRD BRG IN-SX
F	420	0	420	0	0	5-8	1-8
C	46	0	46	0	0	1-8	1-8
D	54	0	61	0	0	1-8	1-8

SEE MITEK STANDARD DETAIL MSD2015-H FOR CONNECTION TO JOINT(S) C , D

UNFACTORED REACTIONS

JT	1ST LCASE COMBINED	MAX./MIN. COMPONENT REACTIONS SNOW	LIVE	PERM.LIVE	WIND	DEAD	SOIL
F	293	215 / 0	0 / 0	0 / 0	0 / 0	77 / 0	0 / 0
C	32	27 / 0	0 / 0	0 / 0	0 / 0	4 / 0	0 / 0
D	43	0 / 0	0 / 0	0 / 0	0 / 0	43 / 0	0 / 0

BEARING MATERIAL TO BE SPF NO.2 OR BETTER AT JOINT(S) F, C

BRACING
TOP CHORD TO BE SHEATHED OR MAX. PURLIN SPACING = 6.25 FT.
MAX. UNBRACED BOTTOM CHORD LENGTH = 10.00 FT OR RIGID CEILING DIRECTLY APPLIED.

ALL PITCH BREAKS AND PERIMETER CORNER JOINTS MUST BE LATERALLY RESTRAINED.

LOADING
TOTAL LOAD CASES: (4)

CHORDS

MEMB. FR-TO	MAX. FACTORED FORCE (LBS)	FACTORED VERT. LOAD (PLF) FROM	TO	LC1 MAX CSI (LC)	MAX. UNBRAC LENGTH
F- B	-365 / 0	0.0	0.0	0.04 (1)	7.81
A- B	0 / 58	-129.7	-129.7	0.20 (1)	10.00
B- C	-45 / 0	-129.7	-129.7	0.19 (1)	6.25
F- E	0 / 0	-18.5	-18.5	0.16 (4)	10.00
E- G	0 / 0	-18.5	-18.5	0.21 (4)	10.00
G- H	0 / 0	-18.5	-18.5	0.21 (4)	10.00
H- D	0 / 0	-18.5	-18.5	0.21 (4)	10.00

WEBS

MEMB. FR-TO	MAX. FACTORED FORCE (LBS)	MAX CSI (LC)
B- E	0 / 0	0.00 (1)

SPECIFIED CONCENTRATED LOADS (LBS)

JT	LOC.	LC1	MAX-	MAX+	FACE	DIR.	TYPE	HEEL	CONN.
G	1-11-4	1	1	---	BACK	VERT	TOTAL	---	C1
H	3-11-4	1	1	---	BACK	VERT	TOTAL	---	C1

CONNECTION REQUIREMENTS

1) **C1:** A SUITABLE HANGER/MECHANICAL CONNECTION IS REQUIRED.

DESIGN CRITERIA

SPECIFIED LOADS:

TOP CH.	LL	=	38.3	PSF
	DL	=	6.0	PSF
BOT CH.	LL	=	0.0	PSF
	DL	=	7.4	PSF
TOTAL LOAD		=	51.6	PSF

SPACING = 24.0 IN. C/C

THIS TRUSS IS DESIGNED FOR RESIDENTIAL OR SMALL BUILDING REQUIREMENTS OF PART 9, NBCC 2015

THIS DESIGN COMPLIES WITH:
- PART 9 OF BCBC 2018 , NBC-2019AE
- PART 9 OF OBC 2012 (2019 AMENDMENT)
- CSA 086-14
- TPIC 2014

DESIGN ASSUMPTIONS
-OVERHANG NOT TO BE ALTERED OR CUT OFF.

(55 % OF 54.4 P.S.F. G.S.L. PLUS 8.4 P.S.F. RAIN LOAD) EQUALS 38.3 P.S.F. SPECIFIED ROOF LIVE LOAD

ALLOWABLE DEFL.(LL)= L/360 (0.20")
CALCULATED VERT. DEFL.(LL) = L/ 999 (0.00")
ALLOWABLE DEFL.(TL)= L/360 (0.20")
CALCULATED VERT. DEFL.(TL) = L/ 999 (0.05")

CSI: TC=0.20/1.00 (A-B:1) , BC=0.21/1.00 (D-E:4) , WB=0.00/1.00 (B-E:1) , SSI=0.12/1.00 (B-C:1)

DOL LUMBER=1.00 NAIL=1.00 LS BEND=1.00 COMP=1.00 SHEAR=1.00 TENS= 1.00

COMPANION LIVE LOAD FACTOR = 1.00

TRUSS PLATE MANUFACTURER IS NOT RESPONSIBLE FOR QUALITY CONTROL IN THE TRUSS MANUFACTURING PLANT .

NAIL VALUES

PLATE	GRIP(DRY) (PSI) MAX	MIN	SHEAR (PLI) MAX	MIN	SECTION (PLI) MAX	MIN
MT20	650	371	1747	788	1987	1873

PLATE PLACEMENT TOL. = 0.250 inches

PLATE ROTATION TOL. = 5.0 Deg.

JSI GRIP= 0.23 (B) (INPUT = 0.90)
JSI METAL= 0.10 (B) (INPUT = 1.00)

JOB NAME	TRUSS NAME	QUANTITY	PLY	JOB DESC.	DRWG NO.
418649	J8	6	1	BAYVIEW WELLINGTON TRUSS DESC.	

Tamarack Roof Truss, Burlington

Version 8.630 S Aug 30 2023 MiTek Industries, Inc. Tue Nov 14 11:14:33 2023 Page 1
ID:UaoF4umx8QMX1bo7Q0Zg7Cya5EO-mRPE3vTmGP9ophwzn 9o7SLrWOnOiX KSAL96yJIQK

Scale = 1:26.6

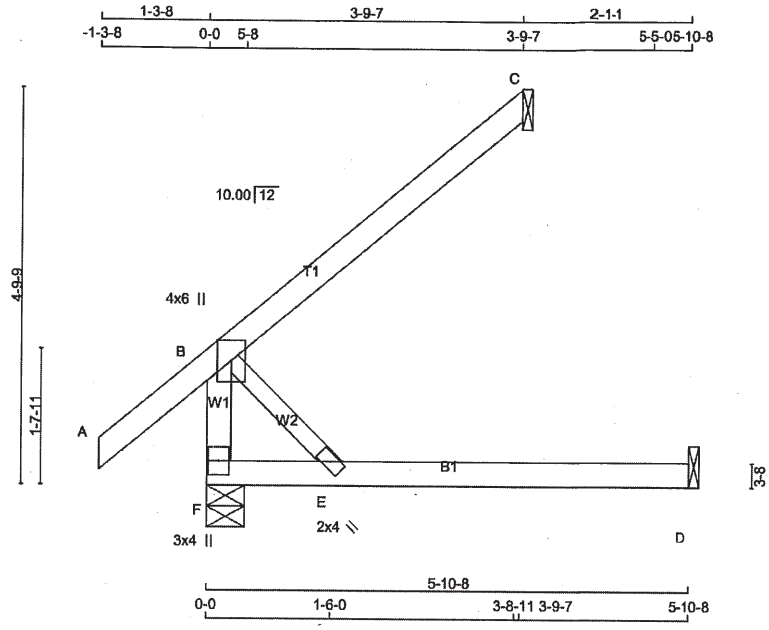

TOTAL WEIGHT = 6 X 17 = 104 lb

LUMBER
N. L. G. A. RULES

CHORDS	SIZE		LUMBER	DESCR.
F - B	2x4	DRY	No.2	SPF
A - C	2x4	DRY	No.2	SPF
F - D	2x4	DRY	No.2	SPF
ALL WEBS	2x3	DRY	No.2	SPF

DRY: SEASONED LUMBER.

PLATES (table is in inches)

JT	TYPE	PLATES	W	LEN	Y	X
B	TMVW+p	MT20	4.0	6.0	Edge	
E	BMW+w	MT20	2.0	4.0		
F	BMV1+p	MT20	3.0	4.0		

Edge - INDICATES REFERENCE CORNER OF PLATE TOUCHES EDGE OF CHORD.

NOTES-
1) Lateral braces to be a minimum of 2X4 SPF #2.

LICENSED PROFESSIONAL ENGINEER
11/14/23
C. M. HEYENS
100505065
PROVINCE OF ONTARIO

STRUCTURAL COMPONENT ONLY
DWG # TR23111065

DIMENSIONS, SUPPORTS AND LOADINGS SPECIFIED BY FABRICATOR TO BE VERIFIED BY BUILDING DESIGNER

BEARINGS

JT	FACTORED GROSS REACTION VERT	HORZ	MAXIMUM FACTORED GROSS REACTION DOWN	HORZ	UPLIFT	INPUT BRG IN-SX	REQRD BRG IN-SX
F	480	0	480	0	0	5-8	1-8
C	246	0	246	0	0	1-8	1-8
D	54	0	61	0	0	1-8	1-8

SEE MITEK STANDARD DETAIL MSD2015-H FOR CONNECTION TO JOINT(S) C , D

UNFACTORED REACTIONS

JT	1ST LCASE COMBINED	MAX./MIN. COMPONENT REACTIONS SNOW	LIVE	PERM.LIVE	WIND	DEAD	SOIL
F	334	251 / 0	0 / 0	0 / 0	0 / 0	83 / 0	0 / 0
C	168	145 / 0	0 / 0	0 / 0	0 / 0	23 / 0	0 / 0
D	43	0 / 0	0 / 0	0 / 0	0 / 0	43 / 0	0 / 0

BEARING MATERIAL TO BE SPF NO.2 OR BETTER AT JOINT(S) F, C

BRACING
TOP CHORD TO BE SHEATHED OR MAX. PURLIN SPACING = 10.00 FT.
MAX. UNBRACED BOTTOM CHORD LENGTH = 10.00 FT OR RIGID CEILING DIRECTLY APPLIED.

ALL PITCH BREAKS AND PERIMETER CORNER JOINTS MUST BE LATERALLY RESTRAINED.

LOADING
TOTAL LOAD CASES: (4)

CHORDS

MEMB. FR-TO	MAX. FACTORED FORCE (LBS)	FACTORED VERT. LOAD (PLF) FROM	TO	LC1	MAX CSI (LC)	MAX. UNBRAC LENGTH
F- B	-425 / 0	0.0	0.0	0.05 (1)	7.81	
A- B	0 / 58	-129.7	-129.7	0.18 (1)	10.00	
B- C	0 / 0	-129.7	-129.7	0.32 (1)	10.00	
F- E	0 / 0	-18.5	-18.5	0.14 (4)	10.00	
E- D	0 / 0	-18.5	-18.5	0.19 (4)	10.00	

WEBS

MEMB. FR-TO	MAX. FACTORED FORCE (LBS)	MAX CSI (LC)
B- E	0 / 0	0.00 (1)

DESIGN CRITERIA

SPECIFIED LOADS:

TOP CH.	LL	=	38.3	PSF
	DL	=	6.0	PSF
BOT CH.	LL	=	0.0	PSF
	DL	=	7.4	PSF
TOTAL LOAD		=	51.6	PSF

SPACING = 24.0 IN. C/C

THIS TRUSS IS DESIGNED FOR RESIDENTIAL OR SMALL BUILDING REQUIREMENTS OF PART 9, NBCC 2015

THIS DESIGN COMPLIES WITH:
- PART 9 OF BCBC 2018 , NBC-2019AE
- PART 9 OF OBC 2012 (2019 AMENDMENT)
- CSA 086-14
- TPIC 2014

(55 % OF 54.4 P.S.F. G.S.L. PLUS 8.4 P.S.F. RAIN LOAD) EQUALS 38.3 P.S.F. SPECIFIED ROOF LIVE LOAD

ALLOWABLE DEFL.(LL)= L/360 (0.20")
CALCULATED VERT. DEFL.(LL) = L/ 999 (0.00")
ALLOWABLE DEFL.(TL)= L/360 (0.20")
CALCULATED VERT. DEFL.(TL) = L/ 999 (0.05")

CSI: TC=0.32/1.00 (B-C:1) , BC=0.19/1.00 (D-E:4) , WB=0.00/1.00 (B-E:1) , SSI=0.15/1.00 (B-C:1)

DOL LUMBER=1.00 NAIL=1.00 LS BEND=1.10 COMP=1.10 SHEAR=1.10 TENS= 1.10

COMPANION LIVE LOAD FACTOR = 1.00

AUTOSOLVE RIGHT HEEL ONLY

TRUSS PLATE MANUFACTURER IS NOT RESPONSIBLE FOR QUALITY CONTROL IN THE TRUSS MANUFACTURING PLANT .

NAIL VALUES

PLATE	GRIP(DRY) (PSI) MAX	MIN	SHEAR (PLI) MAX	MIN	SECTION (PLI) MAX	MIN
MT20	650	371	1747	788	1987	1873

PLATE PLACEMENT TOL. = 0.250 inches

PLATE ROTATION TOL. = 5.0 Deg.

JSI GRIP= 0.27 (B) (INPUT = 0.90)
JSI METAL= 0.11 (B) (INPUT = 1.00)

JOB NAME	TRUSS NAME	QUANTITY	PLY	JOB DESC.	DRWG NO.
418649	J9	1	1	BAYVIEW WELLINGTON TRUSS DESC.	

Tamarack Roof Truss, Burlington

Version 8.630 S Aug 30 2023 MiTek Industries, Inc. Tue Nov 14 11:14:34 2023 Page 1
ID:UaoF4umx8QMX1bo7Q0Zg7Cya5EO-EezdHFUO1|HfQqV9Lhg1ffu18o6LR D7Z5wvhYyJlQJ

Scale = 1:18.2

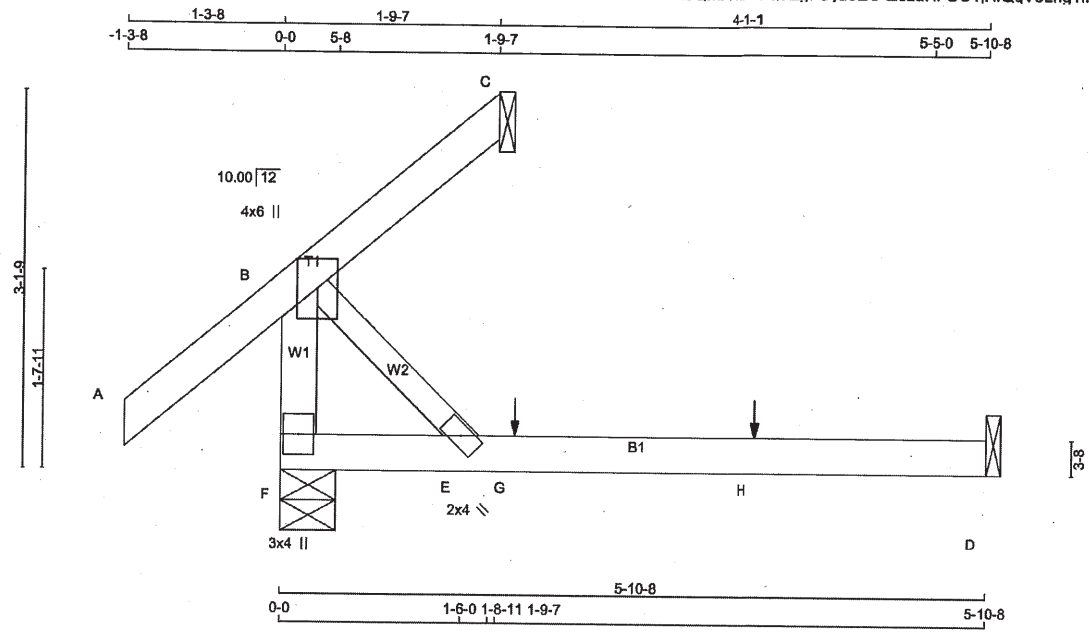

TOTAL WEIGHT = 14 lb [M]

LUMBER

N. L. G. A. RULES

CHORDS	SIZE		LUMBER	DESCR.
F - B	2x4	DRY	No.2	SPF
A - C	2x4	DRY	No.2	SPF
F - D	2x4	DRY	No.2	SPF
ALL WEBS	2x3	DRY	No.2	SPF

DRY: SEASONED LUMBER.

PLATES (table is in Inches)

JT	TYPE	PLATES	W	LEN	Y	X
B	TMVW+p	MT20	4.0	6.0	Edge	
E	BMW+w	MT20	2.0	4.0		
F	BMV1+p	MT20	3.0	4.0		

Edge - INDICATES REFERENCE CORNER OF PLATE TOUCHES EDGE OF CHORD.

NOTES-

1) Lateral braces to be a minimum of 2X4 SPF #2..

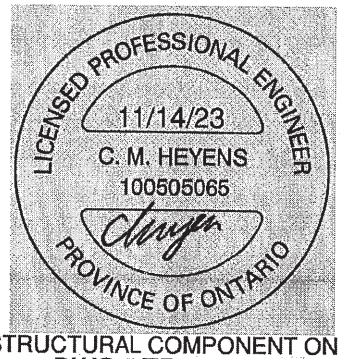

STRUCTURAL COMPONENT ONLY
DWG # TR23111066

DIMENSIONS, SUPPORTS AND LOADINGS SPECIFIED BY FABRICATOR TO BE VERIFIED BY BUILDING DESIGNER

BEARINGS

JT	FACTORED GROSS REACTION VERT	HORZ	MAXIMUM FACTORED GROSS REACTION DOWN	HORZ	UPLIFT	INPUT BRG IN-SX	REQRD BRG IN-SX
F	420	0	420	0	0	5-8	1-8
C	46	0	46	0	0	1-8	1-8
D	54	0	61	0	0	1-8	1-8

SEE MITEK STANDARD DETAIL MSD2015-H FOR CONNECTION TO JOINT(S) C , D

UNFACTORED REACTIONS

JT	1ST LCASE COMBINED	MAX./MIN. COMPONENT REACTIONS SNOW	LIVE	PERM.LIVE	WIND	DEAD	SOIL
F	293	215 / 0	0 / 0	0 / 0	0 / 0	77 / 0	0 / 0
C	32	27 / 0	0 / 0	0 / 0	0 / 0	4 / 0	0 / 0
D	43	0 / 0	0 / 0	0 / 0	0 / 0	43 / 0	0 / 0

BEARING MATERIAL TO BE SPF NO.2 OR BETTER AT JOINT(S) F, C

BRACING

TOP CHORD TO BE SHEATHED OR MAX. PURLIN SPACING = 6.25 FT.
MAX. UNBRACED BOTTOM CHORD LENGTH = 10.00 FT OR RIGID CEILING DIRECTLY APPLIED.

ALL PITCH BREAKS AND PERIMETER CORNER JOINTS MUST BE LATERALLY RESTRAINED.

LOADING

TOTAL LOAD CASES: (4)

CHORDS

MEMB. FR-TO	MAX. FACTORED FORCE (LBS)	FACTORED VERT. LOAD (PLF) FROM	TO	LC1 MAX CSI (LC)	MAX. UNBRAC LENGTH
F- B	-365 / 0	0.0	0.0	0.04 (1)	7.81
A- B	0 / 58	-129.7	-129.7	0.20 (1)	10.00
B- C	-45 / 0	-129.7	-129.7	0.19 (1)	6.25
F- E	0 / 0	-18.5	-18.5	0.16 (4)	10.00
E- G	0 / 0	-18.5	-18.5	0.21 (4)	10.00
G- H	0 / 0	-18.5	-18.5	0.21 (4)	10.00
H- D	0 / 0	-18.5	-18.5	0.21 (4)	10.00

WEBS

MEMB. FR-TO	MAX. FACTORED FORCE (LBS)	MAX CSI (LC)
B- E	0 / 0	0.00 (1)

SPECIFIED CONCENTRATED LOADS (LBS)

JT	LOC.	LC1	MAX-	MAX+	FACE	DIR.	TYPE	HEEL	CONN.
G	1-11-4	1	1	---	FRONT	VERT	TOTAL	—	C1
H	3-11-4	1	1	---	FRONT	VERT	TOTAL	—	C1

CONNECTION REQUIREMENTS

1) **C1:** A SUITABLE HANGER/MECHANICAL CONNECTION IS REQUIRED.

DESIGN CRITERIA

SPECIFIED LOADS:

TOP CH.	LL	=	38.3	PSF
	DL	=	6.0	PSF
BOT CH.	LL	=	0.0	PSF
	DL	=	7.4	PSF
TOTAL LOAD		=	51.6	PSF

SPACING = 24.0 IN. C/C

THIS TRUSS IS DESIGNED FOR RESIDENTIAL OR SMALL BUILDING REQUIREMENTS OF PART 9, NBCC 2015

THIS DESIGN COMPLIES WITH:
- PART 9 OF BCBC 2018 , NBC-2019AE
- PART 9 OF OBC 2012 (2019 AMENDMENT)
- CSA 086-14
- TPIC 2014

DESIGN ASSUMPTIONS
-OVERHANG NOT TO BE ALTERED OR CUT OFF.

(55 % OF 54.4 P.S.F. G.S.L. PLUS 8.4 P.S.F. RAIN LOAD) EQUALS 38.3 P.S.F. SPECIFIED ROOF LIVE LOAD

ALLOWABLE DEFL.(LL)= L/360 (0.20")
CALCULATED VERT. DEFL.(LL) = L/ 999 (0.00")
ALLOWABLE DEFL.(TL)= L/360 (0.20")
CALCULATED VERT. DEFL.(TL) = L/ 999 (0.05")

CSI: TC=0.20/1.00 (A-B:1) , BC=0.21/1.00 (D-E:4) , WB=0.00/1.00 (B-E:1) , SSI=0.12/1.00 (B-C:1)

DOL LUMBER=1.00 NAIL=1.00 LS BEND=1.00 COMP=1.00 SHEAR=1.00 TENS= 1.00

COMPANION LIVE LOAD FACTOR = 1.00

AUTOSOLVE RIGHT HEEL ONLY

TRUSS PLATE MANUFACTURER IS NOT RESPONSIBLE FOR QUALITY CONTROL IN THE TRUSS MANUFACTURING PLANT .

NAIL VALUES

PLATE	GRIP(DRY) (PSI) MAX	MIN	SHEAR (PLI) MAX	MIN	SECTION (PLI) MAX	MIN
MT20	650	371	1747	788	1987	1873

PLATE PLACEMENT TOL. = 0.250 Inches

PLATE ROTATION TOL. = 5.0 Deg.

JSI GRIP= 0.23 (B) (INPUT = 0.90)
JSI METAL= 0.10 (B) (INPUT = 1.00)

Client:	BAYVIEW WELLINGTON	Date:	11/14/23
Project:	ALCONA SHORES	Input by:	
Address:	INNISFIL	Job Name:	S45-4C
		Project #:	418649

B1 S-P-F #2 2.000" X 10.000" 2-Ply - PASSED

Level: Level

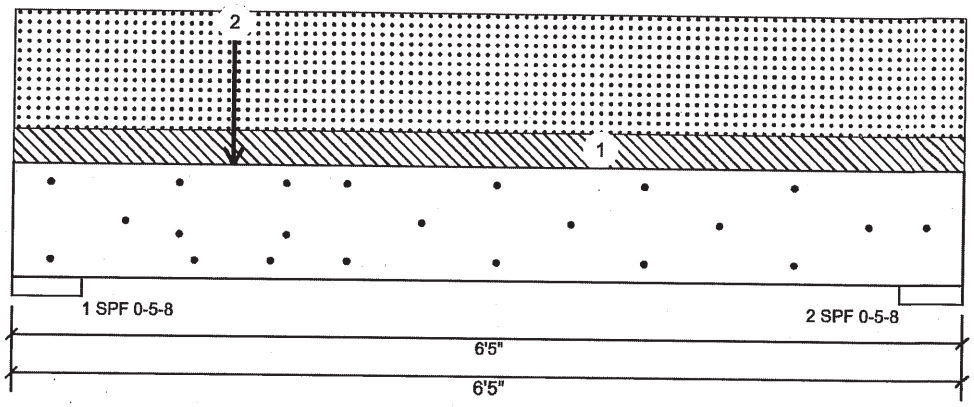

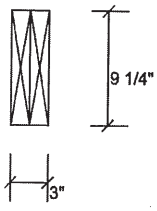

Member Information

Type:	Girder	Application:	Roof (Residential)
Plies:	2	Slope:	0/12
Moisture Condition:	Dry	Design Method:	LSD
Deflection LL:	360	Building Code:	NBCC 2015 OBC 2012(2020 Update)
Deflection TL:	360	Load Sharing:	No
Importance:	Normal - II	Deck:	Not Checked
		Vibration:	Not Checked

Unfactored Reactions UNPATTERNED lb (Uplift)

Brg	Direction	Live	Dead	Snow	Wind
1	Vertical	0	299	1028	0
2	Vertical	0	186	646	0

Bearings and Factored Reactions

Bearing	Length	Dir.	Cap.	React D/L lb	Total	Ld. Case	Ld. Comb.
1 - SPF	5.500"	Vert	19%	374 / 1543	1917	L	1.25D+1.5S
2 - SPF	5.500"	Vert	12%	233 / 969	1202	L	1.25D+1.5S

Analysis Results

Analysis	Actual	Location	Allowed	Capacity	Comb.	Case
Moment	1918 ft-lb	2'5 11/16"	6039 ft-lb	0.318 (32%)	1.25D+1.5S	L
Unbraced	1918 ft-lb	2'5 11/16"	5102 ft-lb	0.376 (38%)	1.25D+1.5S	L
Shear	1542 lb	1'2 3/4"	3984 lb	0.387 (39%)	1.25D+1.5S	L
LL Defl inch	0.022 (L/3119)	3' 7/8"	0.188 (L/360)	0.115 (12%)	S	L
TL Defl inch	0.028 (L/2418)	3' 7/8"	0.188 (L/360)	0.149 (15%)	D+S	L

Design Notes

1. Provide support to prevent lateral movement and rotation at the end bearings. Lateral support may also be required at the interior bearings by the building code.
2. Fasten all plies using 3 rows of Pneumatic Gun Nail (.120x3.25") at 12" o.c. Maximum end distance not to exceed 6".
3. Refer to last page of calculations for fasteners required for specified loads.
4. Concentrated load fastener specification is in addition to hanger fasteners if a hanger is present.
5. Girders are designed to be supported on the bottom edge only.
6. Top loads must be supported equally by all plies.
7. Unsupported length Lu based on points of zero moments.
8. Top must be laterally braced at end bearings.
9. Bottom must be laterally braced at end bearings.
10. Lateral slenderness ratio based on single ply width.

LICENSED PROFESSIONAL ENGINEER
11/14/23
C. M. HEYENS
100505065
PROVINCE OF ONTARIO

STRUCTURAL COMPONENT ONLY
DWG# TR2311121 PG 1/3

Manufacturer Info

Tamarack Lumber
(905) 335-1115

This design is valid until 6/28/26

Client:	BAYVIEW WELLINGTON	Date:	11/14/23
Project:	ALCONA SHORES	Input by:	
Address:	INNISFIL	Job Name:	S45-4C
		Project #:	418649

B1 S-P-F #2 2.000" X 10.000" 2-Ply - PASSED

Level: Level

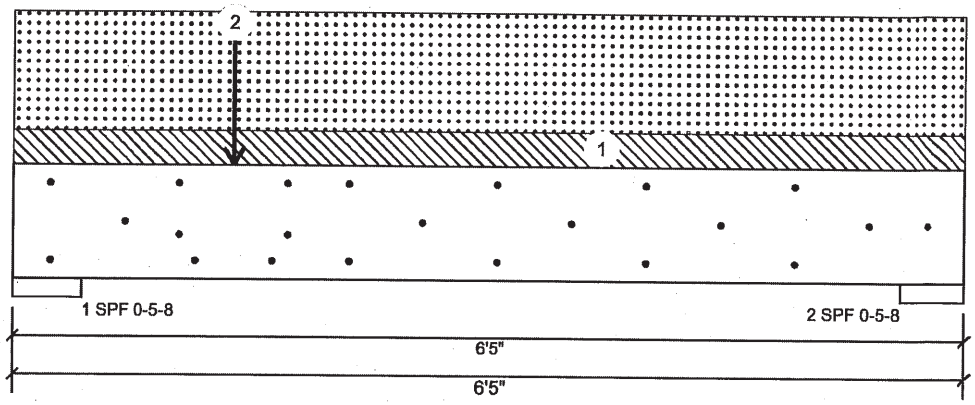

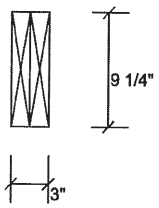

ID	Load Type	Location	Trib Width	Side	Dead	Live	Snow	Wind	Comments
1	Uniform			Top	47 PLF	0 PLF	164 PLF	0 PLF	JACKS
2	Point	1-5-12		Far Face	184 lb	0 lb	622 lb	0 lb	T18C

LICENSED PROFESSIONAL ENGINEER
11/14/23
C. M. HEYENS
100505065
PROVINCE OF ONTARIO

STRUCTURAL COMPONENT ONLY
DWG# TR2311121 PG 2/3

Manufacturer Info

Tamarack Lumber
(905) 335-1115

This design is valid until 6/28/26

Client:	BAYVIEW WELLINGTON	Date:	11/14/23
Project:	ALCONA SHORES	Input by:	
Address:	INNISFIL	Job Name:	S45-4C
		Project #:	418649

B1 S-P-F #2 2.000" X 10.000" 2-Ply - PASSED

Level: Level

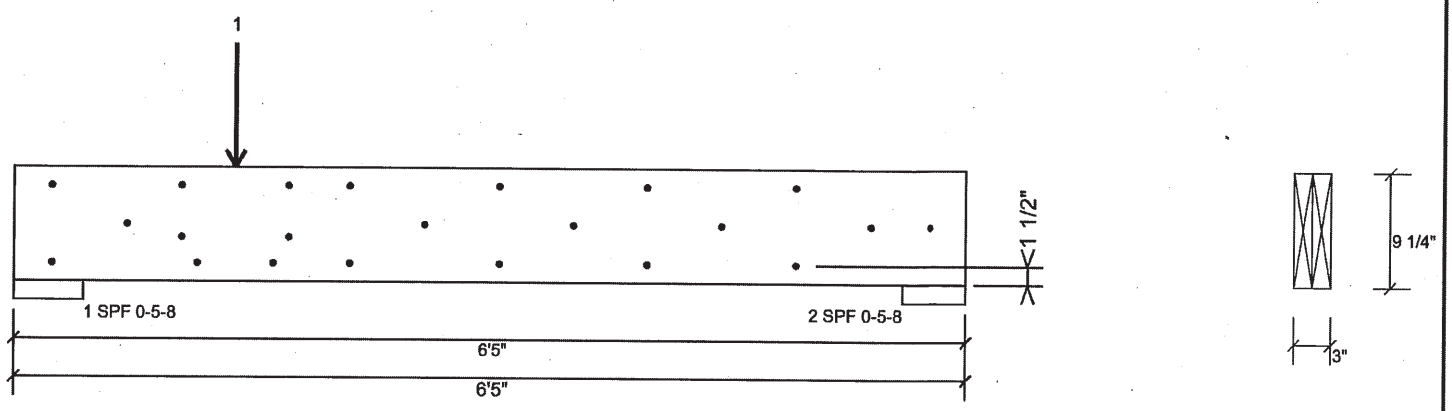

Multi-Ply Analysis

Fasten all plies using 3 rows of Pneumatic Gun Nail (.120x3.25") at 12" o.c.. except for regions covered by concentrated load fastening. Maximum end distance not to exceed 6".

Capacity	0.0 %
Load	0.0 PLF
Yield Limit per Foot	340.0 PLF
Yield Limit per Fastener	113.3 lb.
Yield Mode	g
Edge Distance	1 1/2"
Min. End Distance	3"
Load Combination	
Duration Factor	1.00

Concentrated Load

Fasten at concentrated side load at 1-5-12 with a minimum of (6) – Pneumatic Gun Nail (.120x3.25") in the pattern shown.

Capacity	85.5 %
Load	581.5lb.
Total Yield Limit	680.1 lb.
Yield Limit per Fastener	113.3 lb.
Yield Mode	g
Load Combination	1.25D+1.5S
Duration Factor	1.00

Min/Max fastener distances for Concentrated Side Loads

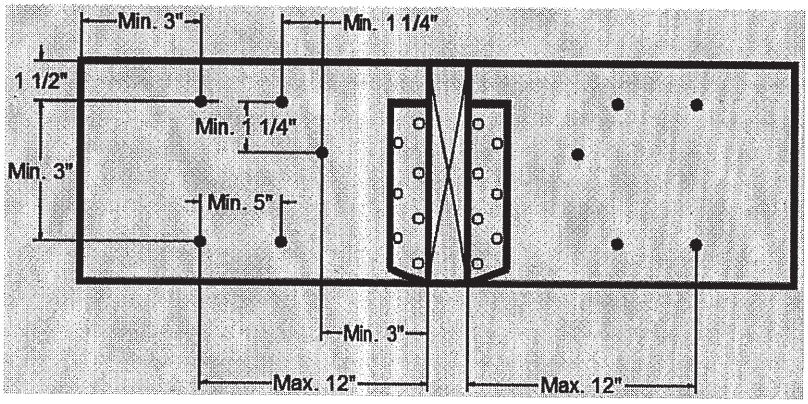

LICENSED PROFESSIONAL ENGINEER
11/14/23
C. M. HEYENS
100505065
PROVINCE OF ONTARIO

STRUCTURAL COMPONENT ONLY
DWG# TR2311121 PG 3/3

Manufacturer Info	Tamarack Lumber (905) 335-1115

This design is valid until 6/28/26

THGQ/THGQH — Truss Girder Hangers

SIMPSON Strong-Tie

Material: THGQ—7 gauge, THGQH—3 gauge

Finish: THGQ—G90 Galvanized,
THGQH—Simpson Strong-Tie® gray paint

Design:

- Factored resistances are in accordance with CSA O86-14 and CSA O86:19.
- Uplift resistances have been increased 15% for short-term load duration. No further increase is allowed.
- Designer must ensure that vertical web member supporting a hanger is capable of resisting loads based on net cross section.
- Girder truss must be a minimum of two plies.
- Bearing assumes Q_r/A_b and Q'_r/A'_b = 812 psi D.Fir–L and 615 psi S-P-F. Truss plates on supported member must be as per 6.5.4 and 7.5.9 TPIC (2014 or 2019 as applicable) to archieve values shown.
- All multiple members must be fastened together to act as a single unit independent of the hanger fasteners.
- Girders must be adequately laterally braced to prevent excessive displacement due to secondary torsional stresses.

Installation:

- Use all specified fasteners.
- Fill all round holes for minimum values and all round and triangle holes for maximum values.
- Strong-Drive® SDS screws driven through truss plates must be approved by the truss designer. Predrilling, using a 5⁄32" bit, is required.
- Connector must be installed, centred on girder vertical web.

Options:

- These hangers may be skewed 45°
- See current catalogue for options

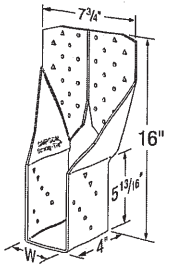

THGQ2-SDS3
(THGQ3-SDS3 similar)

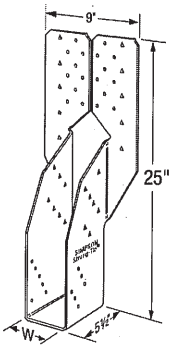

THGQH2-SDS3

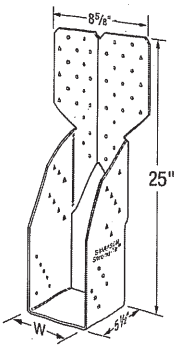

THGQH3-SDS4.5
(THGQH4-SDS6 similar)

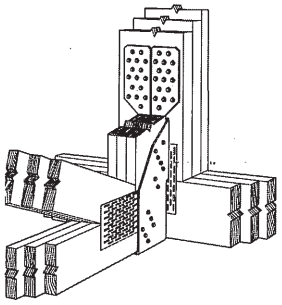

Typical THGQH3-SDS4.5 Installation

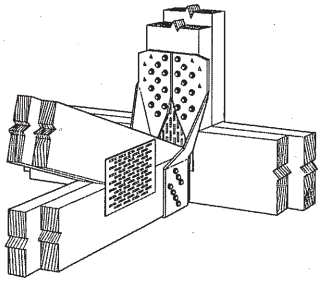

Typical THGQ2-SDS3 Installation

Model No.	Width (in.)	Max. B.C. Depth	Min. Vert. Web Size	Fasteners		Factored Resistance (lb.)			
						D.Fir–L		S-P-F	
				Header	Joist	Uplift (K_D=1.15)	Normal (K_D=1.00)	Uplift (K_D=1.15)	Normal (K_D=1.00)
THGQ2-SDS3 (Min.)	3⁵⁄₁₆	2x6	2x8	(22) SDS ¼" x 3"	(10) SDS ¼" x 3"	5205	11655	3750	8395
THGQ2-SDS3 (Max.)	3⁵⁄₁₆	2x6	2x10	(28) SDS ¼" x 3"	(14) SDS ¼" x 3"	6555	18055	4720	13000
THGQH2-SDS3 (Min.)	3⁵⁄₁₆	2x10	2x8	(18) SDS ¼" x 3"	(14) SDS ¼" x 3"	5790	12555	4170	9040
THGQH2-SDS3 (Max.)	3⁵⁄₁₆	2x10	2x10	(28) SDS ¼" x 3"	(26) SDS ¼" x 3"	14190	18455	10215	15160
THGQ3-SDS4.5 (Min.)	4¹⁵⁄₁₆	2x6	2x8	(22) SDS ¼" x 4½"	(10) SDS ¼" x 4½"	5205	11655	3750	8395
THGQ3-SDS4.5 (Max.)	4¹⁵⁄₁₆	2x6	2x10	(28) SDS ¼" x 4½"	(14) SDS ¼" x 4½"	6555	17760	4720	12785
THGQH3-SDS4.5 (Min.)	4¹⁵⁄₁₆	2x10	2x10	(32) SDS ¼" x 4½"	(14) SDS ¼" x 4½"	5790	17860	4170	12860
THGQH3-SDS4.5 (Max.)	4¹⁵⁄₁₆	2x10	2x12	(38) SDS ¼" x 4½"	(26) SDS ¼" x 4½"	14190	21055	10215	15160
THGQH4-SDS6 (Min.)	6⁹⁄₁₆	2x12	2x10	(34) SDS ¼" x 6"	(14) SDS ¼" x 6"	5790	17860	4170	12860
THGQH4-SDS6 (Max.)	6⁹⁄₁₆	2x12	2x12	(40) SDS ¼" x 6"	(26) SDS ¼" x 6"	14190	24870	10215	17905

1. Factored resistances have been increased 15% for earthquake or wind load with no further increase allowed; reduce where other loads govern.
2. Minimum 2-ply girder required.
3. Connector must be installed centred on girder vertical webs.
4. The thickness of the supporting girder must be equal to or greater than the screw length. For applications where the length of the supplied screws exceeds the thickness of the supporting girder, 3" or 4½" screws may be substituted for the longer length screws with no load reduction, or a shim block may used as approved by the designer.

LICENSED PROFESSIONAL ENGINEER
07/19/2022
B. D. BUNTING
PROVINCE OF ONTARIO

(800) 999-5099
strongtie.com

HGUS — Double-Shear Joist Hangers

SIMPSON Strong-Tie

All HGUS hangers have double-shear nailing. This patented innovation distributes the load through two points on each joist nail for greater strength. It also allows the use of fewer nails, faster installation and the use of common nails for all connections. Do not bend or remove tabs.

Material: 12 gauge

Finish: G90 galvanized

Design:

- Factored resistances are in accordance with CSA O86-14 and CSA O86:19.
- Uplift resistances have been increased 15%. No further increase is permitted.
- Wood shear is not considered in the factored resistances given. The specifier must ensure that the joist and header capacities are capable of withstanding these loads.

Installation:

- Use all specified fasteners
- Nails: 16d = 0.162" dia x 3½" long common wire
- Double-shear nails must be driven at an angle through the joist or truss into the header to achieve the table loads
- Not designed for welded or nailer applications

Options:

- See current catalogue for options

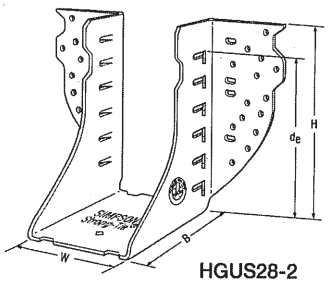

HGUS28-2

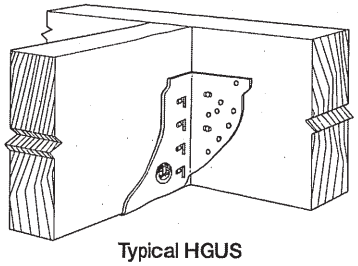

Typical HGUS Installation

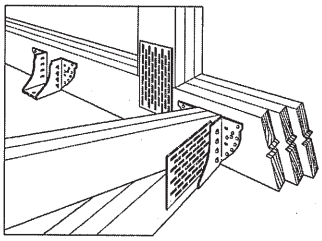

Typical HGUS Installation
(Truss designer to provide fastener quantity for connecting multiple members together)

Model No.	Ga.	Dimensions (in.)				Fasteners		Factored Resistance (lb.)			
								D.Fir–L		S-P-F	
		W	H	B	d_e[1]	Face	Joist	Uplift (K_D=1.15)	Normal (K_D=1.00)	Uplift (K_D=1.15)	Normal (K_D=1.00)
HGUS26	12	1⅝	5⅜	5	4 5/32	(20) 16d	(8) 16d	2685	6625	2685	5700
HGUS26-2	12	3 5/16	5 7/16	4	4⅛	(20) 16d	(8) 16d	4385	8950	3100	6355
HGUS26-3	12	4 15/16	5½	4	4⅛	(20) 16d	(8) 16d	4385	8950	3100	6355
HGUS26-4	12	6 9/16	5 7/16	4	4⅛	(20) 16d	(8) 16d	4385	8950	3100	6355
HGUS28	12	1⅝	7⅛	5	6⅛	(36) 16d	(12) 16d	3310	7675	3100	6900
HGUS28-2	12	3 5/16	7 3/16	4	6⅛	(36) 16d	(12) 16d	6070	12980	4310	9215
HGUS28-3	12	4 15/16	7¼	4	6⅜	(36) 16d	(12) 16d	6070	12980	4310	9215
HGUS28-4	12	6 9/16	7 3/16	4	6⅛	(36) 16d	(12) 16d	6070	12980	4310	9215
HGUS210-2	12	3 5/16	9 3/16	4	8⅛	(46) 16d	(16) 16d	6840	14015	4855	10270
HGUS210-3	12	4 15/16	9¼	4	8⅜	(46) 16d	(16) 16d	6840	14645	4855	10400
HGUS210-4	12	6 9/16	9 3/16	4	8⅛	(46) 16d	(16) 16d	6840	14645	4855	10400
HGUS212-4	12	6 9/16	10⅝	4	10⅛	(56) 16d	(20) 16d	7640	14995	5425	10645
HGUS214-4	12	6 9/16	12⅝	4	11⅛	(66) 16d	(22) 16d	10130	16400	7195	11645

1. d_e is the distance from the seat of the hanger to the highest joist nail.

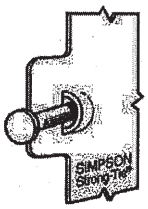

Dome double-shear nailing prevents tabs breaking off (available on some models).

US Patent 5,603,580

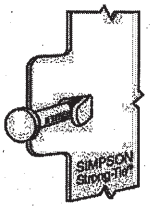

Double-shear nailing side view. Do not bend tab back.

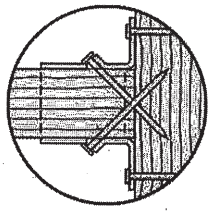

Double-shear nailing top view.

LICENSED PROFESSIONAL ENGINEER
07/19/2022
B. D. BUNTING
PROVINCE OF ONTARIO

(800) 999-5099
strongtie.com

LUS — Double-Shear Joist Hangers

SIMPSON Strong-Tie

All LUS hangers have double-shear nailing. This patented innovation distributes the load through two points on each joist nail for greater strength. It also allows the use of fewer nails, faster installation and the use of common nails for all connections.

Material: 18 gauge

Finish: G90 galvanized

Design:

- Factored resistances are in accordance with CSA O86-14 and CSA O86:19.
- Uplift resistances have been increased 15%. No further increase is permitted.
- Wood shear is not considered in the factored resistances given. The specifier must ensure that the joist and header capacities are capable of withstanding these loads.

Installation:

- Use all specified fasteners
- Nails: 16d = 0.162" dia. x 3½" long common wire, 10d = 0.148" x 3" long common wire
- Double-shear nails must be driven at an angle through the joist or truss into the header to achieve the table loads
- Not designed for welded or nailer applications

Options:

- These hangers cannot be modified

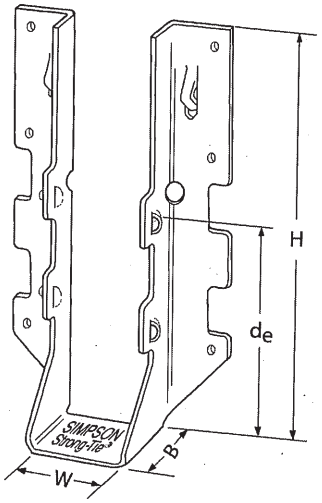

LUS28

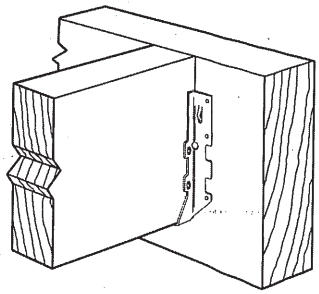

Typical LUS Installation

Model No.	Ga.	Dimensions (in.)				Fasteners		Factored Resistance (lb.)			
								D.Fir–L		S-P-F	
		W	H	B	d_e[1]	Face	Joist	Uplift (K_D=1.15)	Normal (K_D=1.00)	Uplift (K_D=1.15)	Normal (K_D=1.00)
LUS24	18	1 9/16	3 1/8	1 3/4	1 15/16	(4) 10d	(2) 10d	710	1630	645	1155
LUS24-2	18	3 1/8	3 1/8	2	1 13/16	(4) 16d	(2) 16d	835	2020	590	1435
LUS26	18	1 9/16	4 3/4	1 3/4	3 5/8	(4) 10d	(4) 10d	1420	2170	1290	1630
LUS26-2	18	3 1/8	4 7/8	2	4	(4) 16d	(4) 16d	1720	2595	1545	1920
LUS26-3	18	4 5/8	4 3/16	2	3 1/4	(4) 16d	(4) 16d	1720	2595	1545	2340
LUS28	18	1 9/16	6 5/8	1 3/4	3 3/4	(6) 10d	(6) 10d	1420	2520	1290	1790
LUS28-2	18	3 1/8	7	2	4	(6) 16d	(4) 16d	1720	3325	1545	2575
LUS28-3	18	4 5/8	6 1/4	2	3 1/4	(6) 16d	(4) 16d	1720	3325	1545	2375
LUS210	18	1 9/16	7 13/16	1 3/4	3 7/8	(8) 10d	(4) 10d	1420	2785	1290	2210
LUS210-2	18	3 1/8	9	2	6	(8) 16d	(6) 16d	2580	4500	2320	3195
LUS210-3	18	4 5/8	8 3/16	2	5 1/4	(8) 16d	(6) 16d	2580	3345	2320	2375

1. d_e is the distance from the seat of the hanger to the highest joist nail.

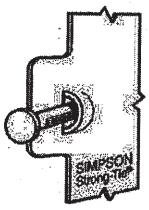

Dome double-shear nailing prevents tabs breaking off (available on some models).

US Patent 5,603,580

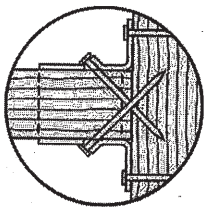

Double-shear nailing top view.

(800) 999-5099
strongtie.com

HGUS — Double-Shear Joist Hangers

SIMPSON Strong-Tie

All HGUS hangers have double-shear nailing. This patented innovation distributes the load through two points on each joist nail for greater strength. It also allows the use of fewer nails, faster installation and the use of common nails for all connections. Do not bend or remove tabs.

Material: 12 gauge

Finish: G90 galvanized

Design:

- Factored resistances are in accordance with CSA O86-14 and CSA O86:19.
- Uplift resistances have been increased 15%. No further increase is permitted.
- Wood shear is not considered in the factored resistances given. The specifier must ensure that the joist and header capacities are capable of withstanding these loads.

Installation:

- Use all specified fasteners
- Nails: 16d = 0.162" dia x 3½" long common wire
- Double-shear nails must be driven at an angle through the joist or truss into the header to achieve the table loads
- Not designed for welded or nailer applications

Options:

- See current catalogue for options

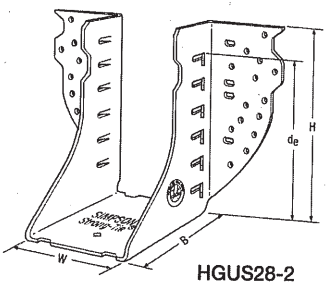

HGUS28-2

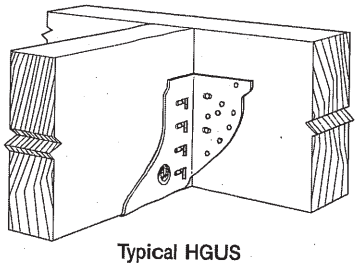

Typical HGUS Installation

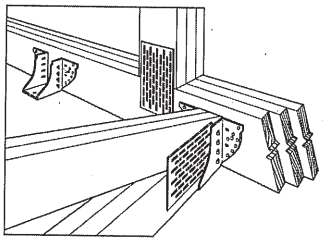

Typical HGUS Installation
(Truss designer to provide fastener quantity for connecting multiple members together)

Model No.	Ga.	Dimensions (in.)				Fasteners		Factored Resistance (lb.)			
								D.Fir–L		S-P-F	
		W	H	B	d_e[1]	Face	Joist	Uplift (K_D=1.15)	Normal (K_D=1.00)	Uplift (K_D=1.15)	Normal (K_D=1.00)
HGUS26	12	1⅝	5⅜	5	4 5/32	(20) 16d	(8) 16d	2685	6625	2685	5700
HGUS26-2	12	3 5/16	5 7/16	4	4⅛	(20) 16d	(8) 16d	4385	8950	3100	6355
HGUS26-3	12	4 15/16	5½	4	4⅛	(20) 16d	(8) 16d	4385	8950	3100	6355
HGUS26-4	12	6 9/16	5 7/16	4	4⅛	(20) 16d	(8) 16d	4385	8950	3100	6355
HGUS28	12	1⅝	7⅛	5	6⅛	(36) 16d	(12) 16d	3310	7675	3100	6900
HGUS28-2	12	3 5/16	7 3/16	4	6⅛	(36) 16d	(12) 16d	6070	12980	4310	9215
HGUS28-3	12	4 15/16	7¼	4	6⅜	(36) 16d	(12) 16d	6070	12980	4310	9215
HGUS28-4	12	6 9/16	7 3/16	4	6⅛	(36) 16d	(12) 16d	6070	12980	4310	9215
HGUS210-2	12	3 5/16	9 3/16	4	8⅛	(46) 16d	(16) 16d	6840	14015	4855	10270
HGUS210-3	12	4 15/16	9¼	4	8⅜	(46) 16d	(16) 16d	6840	14645	4855	10400
HGUS210-4	12	6 9/16	9 3/16	4	8⅛	(46) 16d	(16) 16d	6840	14645	4855	10400
HGUS212-4	12	6 9/16	10⅝	4	10⅛	(56) 16d	(20) 16d	7640	14995	5425	10645
HGUS214-4	12	6 9/16	12⅝	4	11⅛	(66) 16d	(22) 16d	10130	16400	7195	11645

1. d_e is the distance from the seat of the hanger to the highest joist nail.

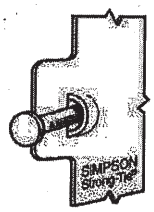

Dome double-shear nailing prevents tabs breaking off (available on some models).

US Patent 5,603,580

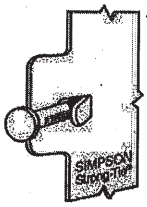

Double-shear nailing side view. Do not bend tab back.

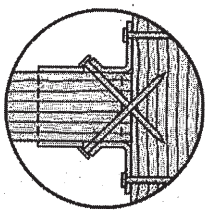

Double-shear nailing top view.

LICENSED PROFESSIONAL ENGINEER
07/19/2022
B. D. BUNTING
PROVINCE OF ONTARIO

(800) 999-5099
strongtie.com

EWP DESIGN INC.

(905) 832-2250 FAX (905) 832-0286

RESPONSIBILITIES AND SPECIFICATIONS

RESPONSIBILITIES

1. EWP DESIGN INC. is responsible for the design of trusses as individual components.
2. It is the responsibility of others to ascertain that the design loads utilized on each drawing meet or exceed the actual dead load imposed by the structure, the live load imposed by the intended use and the snow load imposed by local building code or authorities with jurisdictions.
3. All dimensions are to be verified by the owner, contractor, architect or other authorities with jurisdictions before truss fabrication.
4. EWP DESIGN INC. bears no responsibility for the erection of trusses. Persons erecting trusses are cautioned to seek professional advice regarding the temporary and permanent bracing for the system. Bracing shown on EWP DESIGN INC. drawing is specified for the truss as a component only and forms an integral part of the truss design.
5. It is the truss manufacturer's responsibility to ensure that trusses are manufactured in conformance with specifications of EWP DESIGN INC. as outlined below.

SPECIFICATIONS

1. Trusses designed by EWP DESIGN INC. conform to the relevant section of the Ontario Building Code of Canada (Part 9 or Part 4) or to the Canadian code for farm buildings, whichever applies to the building type, as indicated on the EWP DESIGN INC. drawings, and conform to the design procedures established by the Truss Plate Institute of Canada. Unit stresses used for truss designs are as per the edition of CSA-O86 shown on EWP DESIGN INC. drawings.
2. Lumber is to be the size, species and grade as specified on EWP DESIGN INC. drawings.
3. Moisture content of lumber shall not exceed 19% in service unless specified otherwise.
4. Metal connector plates shall be applied to both faces of truss at each joint and shall be positioned as specified.
5. Top chords of trusses are assumed to be continuously braced laterally by roof sheathing or by purlins at intervals not exceeding 12.5 times the thickness of top chord member.
6. Bottom chords shall be laterally braced at intervals not exceeding 3M (10') o.c., where rigid ceiling is not applied directly to the underside of chords.

February 1, 2019

Symbols

PLATE LOCATION AND ORIENTATION

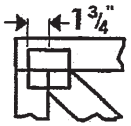

Center plate on joint unless x, y offsets are indicated. Dimensions are in ft-in-sixteenths or mm. Apply plates to both sides of truss and fully embed teeth.

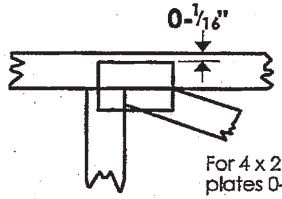

For 4 x 2 orientation, locate plates 0-1/16" from outside edge of truss.

This symbol indicates the required direction of slots in connector plates.

*Plate location details available in MiTek software or upon request.

PLATE SIZE

4 x 4

The first dimension is the plate width measured perpendicular to slots. Second dimension is the length parallel to slots.

LATERAL BRACING LOCATION

Indicated by symbol shown and/or by text in the bracing section of the output. Use T, I or Eliminator bracing if indicated.

BEARING

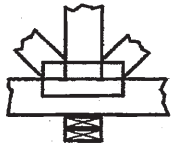

Indicates location where bearings (supports) occur. Icons vary but reaction section indicates joint number where bearings occur.

Industry Standards:

TPIC: Truss Design Procedures and Specifications for Light Metal Plate Connected Wood Trusses
DSB-89: Design Standard for Bracing.
BCSI: Building Component Safety Information, Guide to Good Practice for Handling, Installing & Bracing of Metal Plate Connected Wood Trusses.

Numbering System

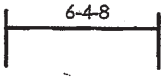

dimensions shown in ft-in-sixteenths or mm (Drawings not to scale)

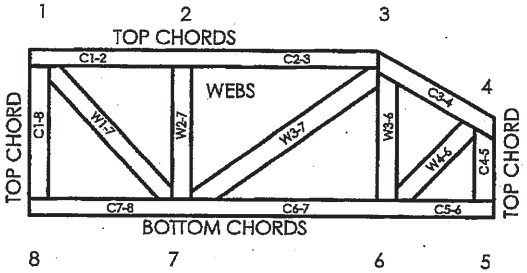

JOINTS ARE GENERALLY NUMBERED/LETTERED CLOCKWISE AROUND THE TRUSS STARTING AT THE JOINT FARTHEST TO THE LEFT.

CHORDS AND WEBS ARE IDENTIFIED BY END JOINT NUMBERS/LETTERS.

PRODUCT CODE APPROVALS

CCMC Reports:

11996-L, 10319-L, 13270-L, 12691-R

MiTek®

POWER TO PERFORM.™

MiTek Engineering Reference Sheet: MII-7473C rev. 10-'08

General Safety Notes

Failure to Follow Could Cause Property Damage or Personal Injury

1. Additional stability bracing for truss system, e.g. diagonal or X-bracing, is always required. See BCSI.
2. Truss bracing must be designed by an engineer. For wide truss spacing, individual lateral braces themselves may require bracing, or alternative T, I, or Eliminator bracing should be considered.
3. Never exceed the design loading shown and never stack materials on inadequately braced trusses.
4. Provide copies of this truss design to the building designer, erection supervisor, property owner and all other interested parties.
5. Cut members to bear tightly against each other.
6. Place plates on each face of truss at each joint and embed fully. Knots and wane at joint locations are regulated by TPIC.
7. Design assumes trusses will be suitably protected from the environment in accord with TPIC.
8. Unless otherwise noted, moisture content of lumber shall not exceed 19% at time of fabrication.
9. Unless expressly noted, this design is not applicable for use with fire retardant, preservative treated, or green lumber.
10. Camber is a non-structural consideration and is the responsibility of truss fabricator. General practice is to camber for dead load deflection.
11. Plate type, size, orientation and location dimensions indicated are minimum plating requirements.
12. Lumber used shall be of the species and size, and in all respects, equal to or better than that specified.
13. Top chords must be sheathed or purlins provided at spacing indicated on design.
14. Bottom chords require lateral bracing at 10 ft. spacing, or less, if no ceiling is installed, unless otherwise noted.
15. Connections not shown are the responsibility of others.
16. Do not cut or alter truss member or plate without prior approval of an engineer.
17. Install and load vertically unless indicated otherwise.
18. Use of green or treated lumber may pose unacceptable environmental, health or performance risks. Consult with project engineer before use.
19. Review all portions of this design (front, back, words and pictures) before use. Reviewing pictures alone is not sufficient.
20. Design assumes manufacture in accordance with TPIC Quality Criteria.