All conventional framing to conform with Part 9 of O.B.C. 2012 (2019 amendment). Roof rafters that cross over or meet trusses to be min. 2x4 SPF #2 @ 24" o/c with a vertical post to the truss at each cross point. Vertical posts longer than 6' to have lateral bracing so that the distance between the post end points and lateral bracing does not exceed 6'.

ASPHALT SHINGLES
FINISHED OVERHANG: 12"
2x6 EXTERIOR WALLS
2x6 FASCIA BOARD
HEEL: R.T.M.C.

DESIGN CONFORMS WITH OBC 2012 (2019 amendment) OCCUPANCY: RESIDENTIAL | PART: 9
Ss = 43.8 psf | Sr = 8.4 psf

DESIGN LOADS:
TCSL = 32.5 psf
TCDL = 6.0 psf
BCLL = 0.0 psf
BCDL = 7.4 psf

HARDWARE:
LUS24 - (**O**)
LJS26DS - (**V**)
HGUS26-2 - (**XX**)

DENOTES:
CONVENTIONAL FRAMING

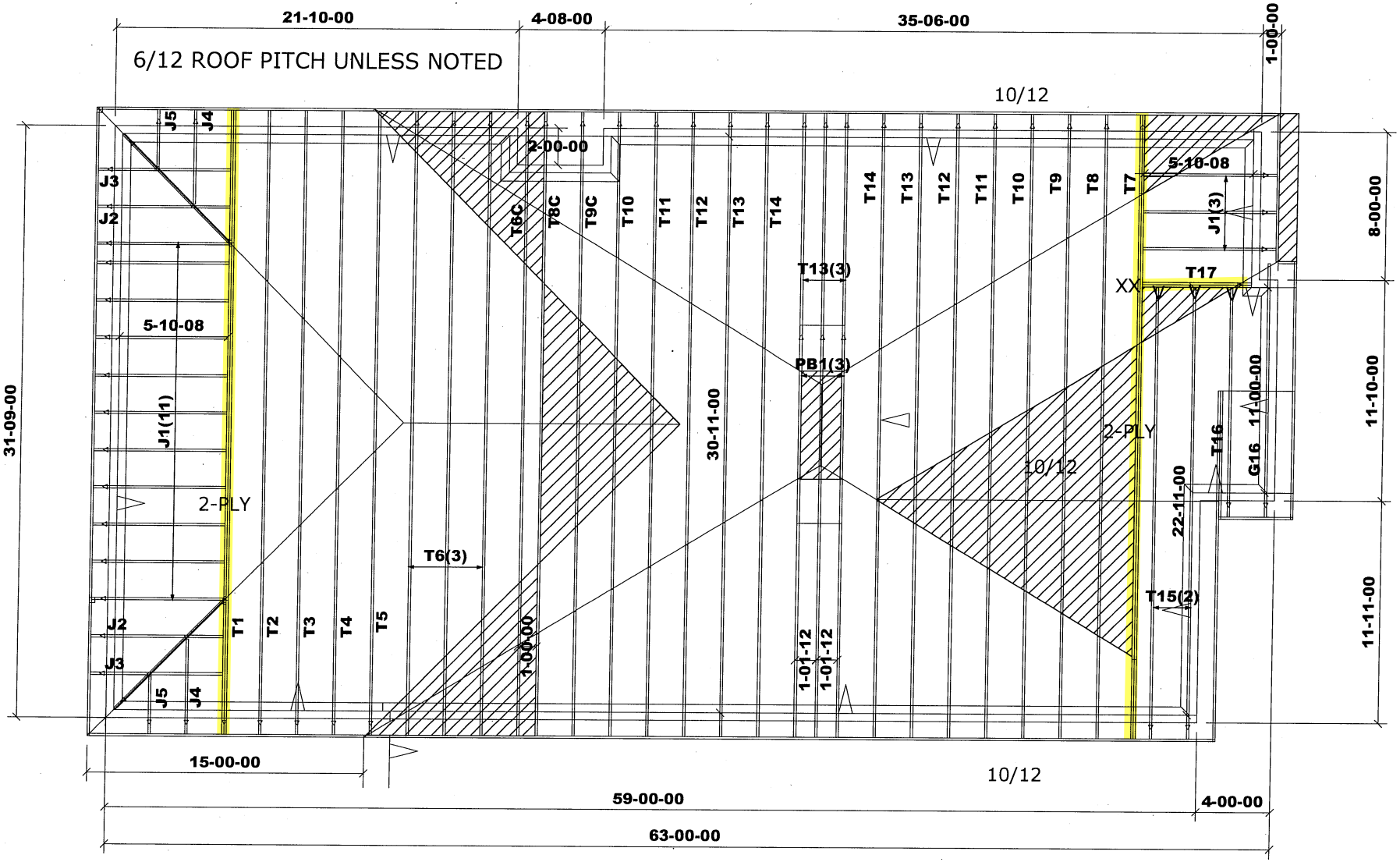

TAMARACK ROOF TRUSSES INC.	Job Track: **50465**	Builder / Location: **BAYVIEW WELLINGTON / BRADFORD**	Model / Elevation: **S38-21 / A**
	Plan Log: **205569**	Project: **GREEN VALLEY EAST**	
	Layout ID: **423611**	Date: 2022-06-28 Sales: Rick DiCiano Designer: JG	

THESE DRAWINGS CONSTITUTE THE PROPERTY OF TAMARACK ROOF TRUSSES INC., SHALL NOT BE REPRODUCED, PUBLISHED, OR REDISTRIBUTED IN ANY MANNER OR UTILIZED FOR ANY PURPOSE OTHER THAN THE MANUFACTURE OF TRUSSES BY TAMARACK ROOF TRUSSES INC AND WILL BE RETRACTED BY TAMARACK ROOF TRUSSES INC IF UTILIZED FOR ANY OTHER PURPOSE.

Mitek ver 8.5.3.233

REVIEWED

All conventional framing to conform with Part 9 of O.B.C. 2012 (2019 amendment). Roof rafters that cross over or meet trusses to be min. 2x4 SPF #2 @ 24" o/c with a vertical post to the truss at each cross point. Vertical posts longer than 6' to have lateral bracing so that the distance between the post end points and lateral bracing does not exceed 6'.

ASPHALT SHINGLES
FINISHED OVERHANG: 12"
2x6 EXTERIOR WALLS
2x6 FASCIA BOARD
HEEL: R.T.M.C.

DESIGN CONFORMS WITH OBC 2012 (2019 amendment) OCCUPANCY: RESIDENTIAL | PART: 9
Ss = 43.8 psf | Sr = 8.4 psf

DESIGN LOADS:
TCSL = 32.5 psf
TCDL = 6.0 psf
BCLL = 0.0 psf
BCDL = 7.4 psf

HARDWARE:
LUS24 - (**O**)
LJS26DS - (**V**)
HGUS26-2 - (**XX**)
TC-26 - (@)

DENOTES: CONVENTIONAL FRAMING

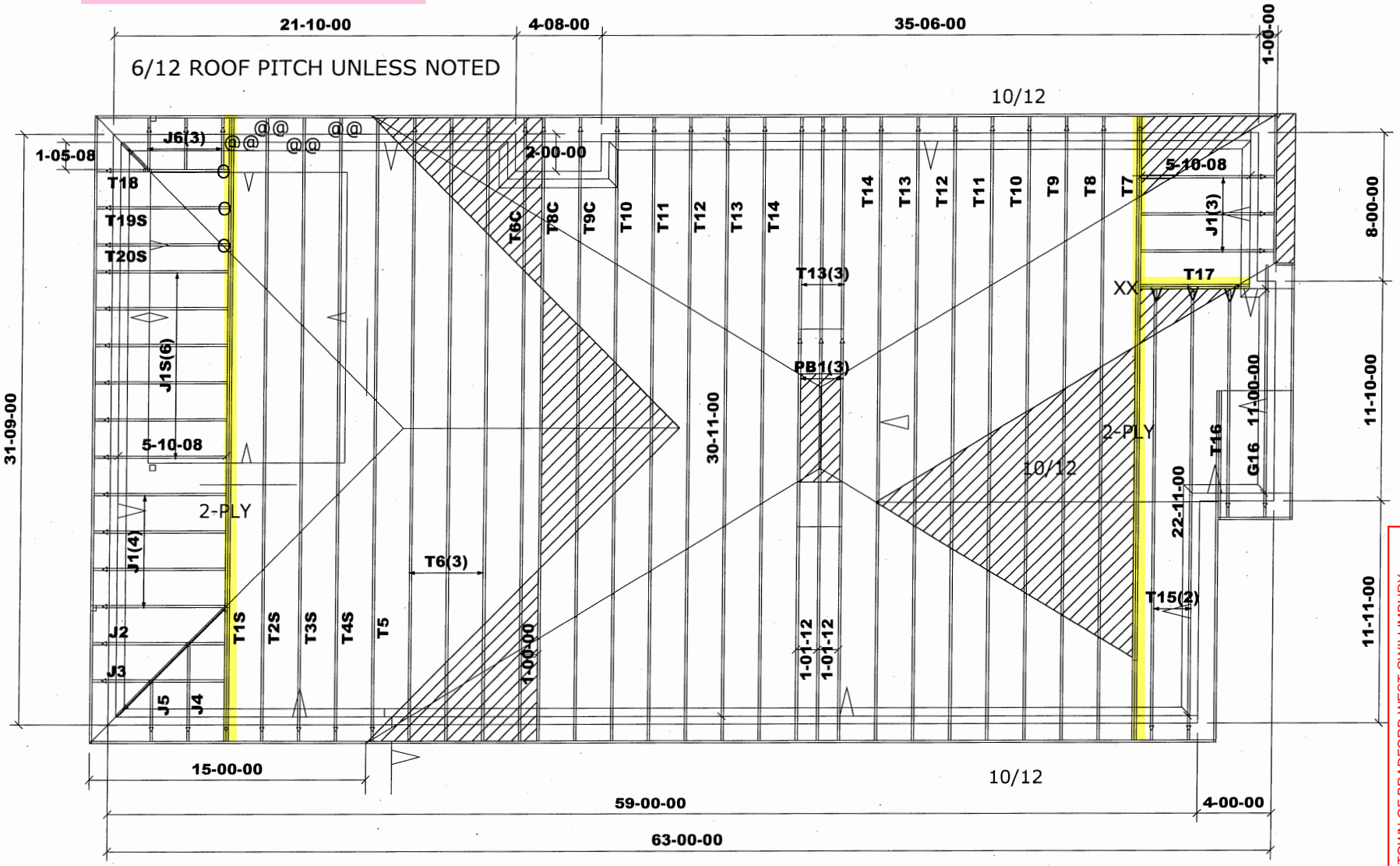

TOWN OF BRADFORD WEST GWILLIMBURY
BUILDING DEPARTMENT
PLANS EXAMINED
ONTARIO BUILDING CODE APPLIES
DATE: 2022-08-10
INSPECTOR: BG

TAMARACK ROOF TRUSSES INC.

Job Track: 50465	Builder / Location: BAYVIEW WELLINGTON / BRADFORD	Model / Elevation: S38-21 / A-OPT.WITH COFF.	
Plan Log: 205569	Project: GREEN VALLEY EAST		
Layout ID: 423610	Date: 2022-06-28	Sales: Rick DiCiano	Designer: JG

THESE DRAWINGS CONSTITUTE THE PROPERTY OF TAMARACK ROOF TRUSSES INC., SHALL NOT BE REPRODUCED, PUBLISHED, OR REDISTRIBUTED IN ANY MANNER OR UTILIZED FOR ANY PURPOSE OTHER THAN THE MANUFACTURE OF TRUSSES BY TAMARACK ROOF TRUSSES INC AND WILL BE RETRACTED BY TAMARACK ROOF TRUSSES INC IF UTILIZED FOR ANY OTHER PURPOSE.

Mitek ver 8.5.3.233

REVIEWED

All conventional framing to conform with Part 9 of O.B.C. 2012 (2019 amendment). Roof rafters that cross over or meet trusses to be min. 2x4 SPF #2 @ 24" o/c with a vertical post to the truss at each cross point. Vertical posts longer than 6' to have lateral bracing so that the distance between the post end points and lateral bracing does not exceed 6'.

ASPHALT SHINGLES
FINISHED OVERHANG: 12"
2x6 EXTERIOR WALLS
2x6 FASCIA BOARD
HEEL: R.T.M.C.

DESIGN CONFORMS WITH OBC 2012 (2019 amendment) OCCUPANCY: RESIDENTIAL | PART: 9
Ss = 43.8 psf | Sr = 8.4 psf

DESIGN LOADS:
TCSL = 32.5 psf
TCDL = 6.0 psf
BCLL = 0.0 psf
BCDL = 7.4 psf

HARDWARE:
LUS24 - (**O**)
LJS26DS - (**V**)
HGUS26-2 - (**XX**)

DENOTES: CONVENTIONAL FRAMING

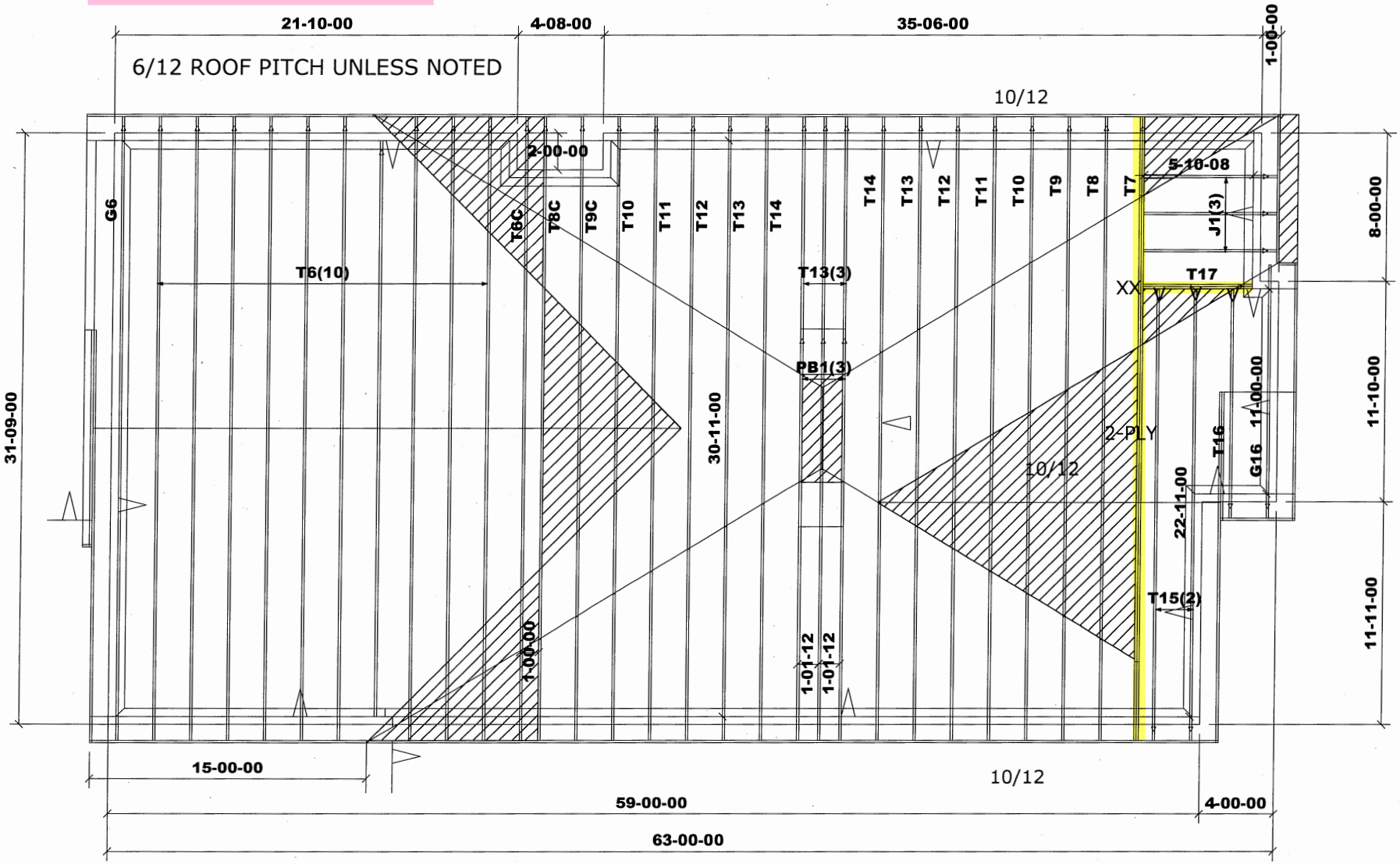

TAMARACK ROOF TRUSSES INC.	Job Track: **50465**	Builder / Location: **BAYVIEW WELLINGTON / BRADFORD**	Model / Elevation: **S38-21 / A-REAR UNGRADE**
	Plan Log: **205569**	Project: **GREEN VALLEY EAST**	
	Layout ID: **423612**	Date: **2022-06-28** Sales: Rick DiCiano Designer: JG	

THESE DRAWINGS CONSTITUTE THE PROPERTY OF TAMARACK ROOF TRUSSES INC., SHALL NOT BE REPRODUCED, PUBLISHED, OR REDISTRIBUTED IN ANY MANNER OR UTILIZED FOR ANY PURPOSE OTHER THAN THE MANUFACTURE OF TRUSSES BY TAMARACK ROOF TRUSSES INC IF UTILIZED FOR ANY OTHER PURPOSE.

Mitek ver 8.5.3.233

REVIEWED

All conventional framing to conform with Part 9 of O.B.C. 2012 (2019 amendment). Roof rafters that cross over or meet trusses to be min. 2x4 SPF #2 @ 24" o/c with a vertical post to the truss at each cross point. Vertical posts longer than 6' to have lateral bracing so that the distance between the post end points and lateral bracing does not exceed 6'.

ASPHALT SHINGLES
FINISHED OVERHANG: 12"
2x6 EXTERIOR WALLS
2x6 FASCIA BOARD
HEEL: R.T.M.C.

DESIGN CONFORMS WITH OBC 2012 (2019 amendment) OCCUPANCY: RESIDENTIAL | PART: 9
Ss = 43.8 psf | Sr = 8.4 psf

DESIGN LOADS:
TCSL = 32.5 psf
TCDL = 6.0 psf
BCLL = 0.0 psf
BCDL = 7.4 psf

HARDWARE:
LUS24 - (**O**)
LJS26DS - (**V**)
HGUS26-2 - (**XX**)

DENOTES: CONVENTIONAL FRAMING

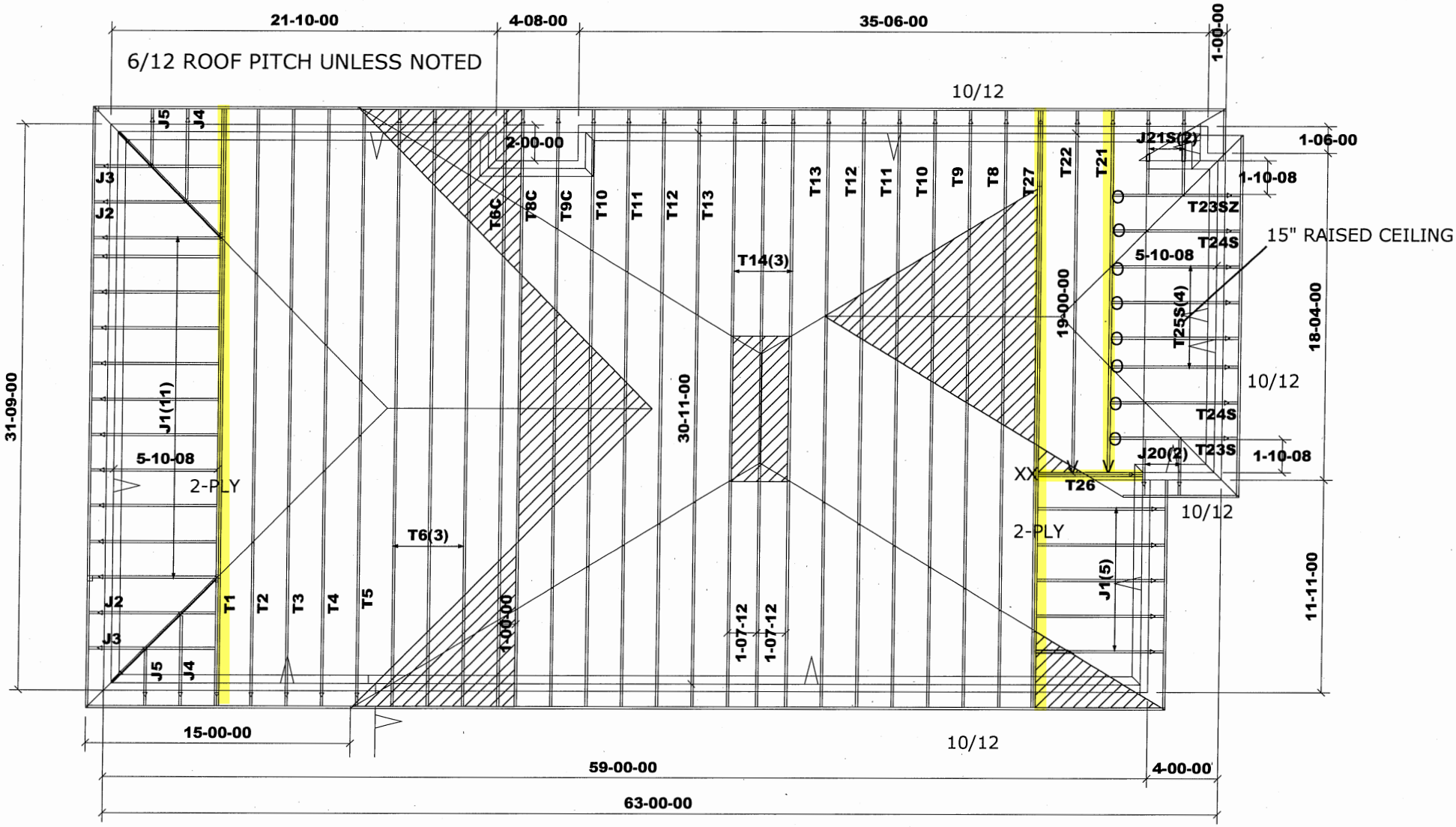

TAMARACK ROOF TRUSSES INC.	Job Track: **50465**	Builder / Location: **BAYVIEW WELLINGTON / BRADFORD**	Model / Elevation: **S38-21 / B**
	Plan Log: **205569**	Project: **GREEN VALLEY EAST**	
	Layout ID: **423614**	Date: 2022-06-28 Sales: Rick DiCiano Designer: JG	

THESE DRAWINGS CONSTITUTE THE PROPERTY OF TAMARACK ROOF TRUSSES INC., SHALL NOT BE REPRODUCED, PUBLISHED, OR REDISTRIBUTED IN ANY MANNER OR UTILIZED FOR ANY PURPOSE OTHER THAN THE MANUFACTURE OF TRUSSES BY TAMARACK ROOF TRUSSES INC AND WILL BE RETRACTED BY TAMARACK ROOF TRUSSES INC IF UTILIZED FOR ANY OTHER PURPOSE.

Mitek ver 8.5.3.233

REVIEWED

All conventional framing to conform with Part 9 of O.B.C. 2012 (2019 amendment). Roof rafters that cross over or meet trusses to be min. 2x4 SPF #2 @ 24" o/c with a vertical post to the truss at each cross point. Vertical posts longer than 6' to have lateral bracing so that the distance between the post end points and lateral bracing does not exceed 6'.

ASPHALT SHINGLES
FINISHED OVERHANG: 12"
2x6 EXTERIOR WALLS
2x6 FASCIA BOARD
HEEL: R.T.M.C.

DESIGN CONFORMS WITH OBC 2012 (2019 amendment) OCCUPANCY: RESIDENTIAL | PART: 9
Ss = 43.8 psf | Sr = 8.4 psf

DESIGN LOADS:
TCSL = 32.5 psf
TCDL = 6.0 psf
BCLL = 0.0 psf
BCDL = 7.4 psf

HARDWARE:
LUS24 - (**O**)
LJS26DS - (**V**)
HGUS26-2 - (**XX**)
TC26 - (@)

DENOTES: CONVENTIONAL FRAMING

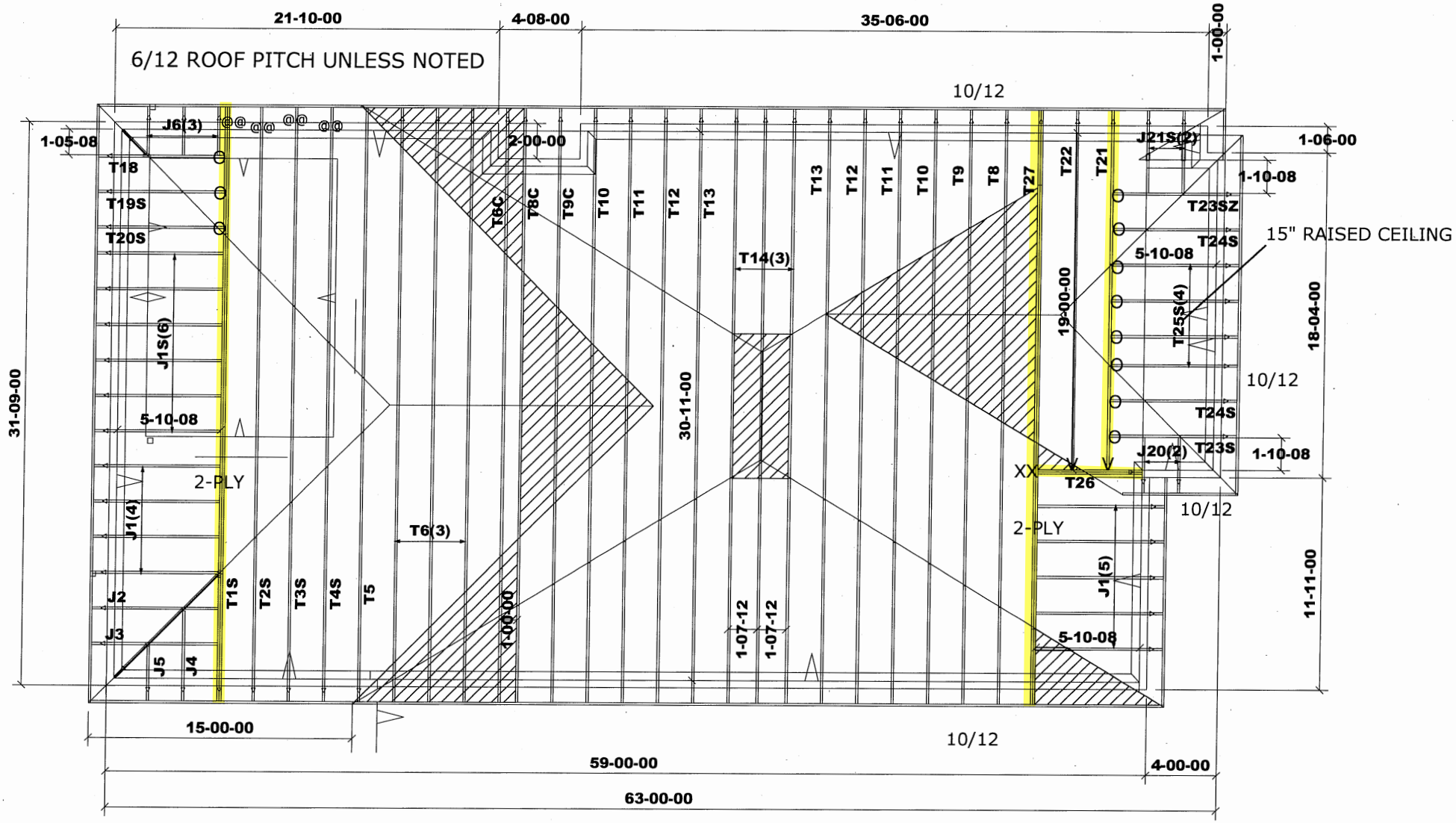

TAMARACK ROOF TRUSSES INC.	Job Track: **50465**	Builder / Location: **BAYVIEW WELLINGTON / BRADFORD**	Model / Elevation: **S38-21 / B-OPT.WITH COFF**
	Plan Log: **205569**	Project: **GREEN VALLEY EAST**	
	Layout ID: **423613**	Date: **2022-06-28** Sales: Rick DiCiano Designer: JG	

THESE DRAWINGS CONSTITUTE THE PROPERTY OF TAMARACK ROOF TRUSSES INC., SHALL NOT BE REPRODUCED, PUBLISHED, OR REDISTRIBUTED IN ANY MANNER OR UTILIZED FOR ANY PURPOSE OTHER THAN THE MANUFACTURE OF TRUSSES BY TAMARACK ROOF TRUSSES INC AND WILL BE RETRACTED BY TAMARACK ROOF TRUSSES INC IF UTILIZED FOR ANY OTHER PURPOSE.

Mitek ver 8.5.3.233

REVIEWED

All conventional framing to conform with Part 9 of O.B.C. 2012 (2019 amendment). Roof rafters that cross over or meet trusses to be min. 2x4 SPF #2 @ 24" o/c with a vertical post to the truss at each cross point. Vertical posts longer than 6' to have lateral bracing so that the distance between the post end points and lateral bracing does not exceed 6'.

ASPHALT SHINGLES
FINISHED OVERHANG: 12"
2x6 EXTERIOR WALLS
2x6 FASCIA BOARD
HEEL: R.T.M.C.

DESIGN CONFORMS WITH OBC 2012 (2019 amendment) OCCUPANCY: RESIDENTIAL | PART: 9
Ss = 43.8 psf | Sr = 8.4 psf

DESIGN LOADS:
TCSL = 32.5 psf
TCDL = 6.0 psf
BCLL = 0.0 psf
BCDL = 7.4 psf

HARDWARE:
LUS24 - (**O**)
LJS26DS - (**V**)
HGUS26-2 - (**XX**)

DENOTES: CONVENTIONAL FRAMING

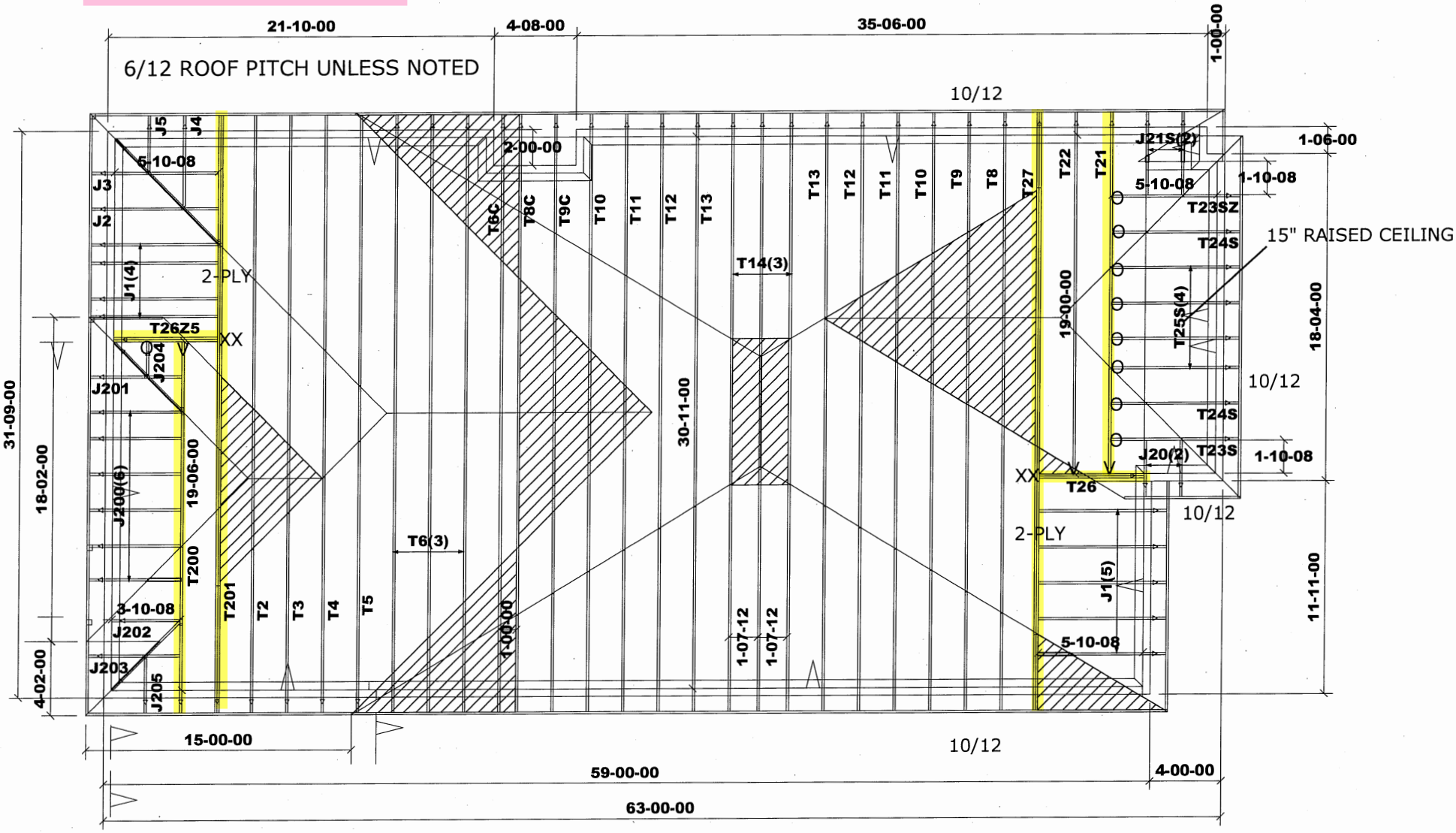

TAMARACK ROOF TRUSSES INC.	Job Track: **50465**	Builder / Location: **BAYVIEW WELLINGTON / BRADFORD**	Model / Elevation: **S38-21 / B-REAR UPGRADE**
	Plan Log: **205569**	Project: **GREEN VALLEY EAST**	
	Layout ID: **423615**	Date: 2022-06-28 Sales: Rick DiCiano Designer: JG	

THESE DRAWINGS CONSTITUTE THE PROPERTY OF TAMARACK ROOF TRUSSES INC., SHALL NOT BE REPRODUCED, PUBLISHED, OR REDISTRIBUTED IN ANY MANNER OR UTILIZED FOR ANY PURPOSE OTHER THAN THE MANUFACTURE OF TRUSSES BY TAMARACK ROOF TRUSSES INC AND WILL BE RETRACTED BY TAMARACK ROOF TRUSSES INC IF UTILIZED FOR ANY OTHER PURPOSE.

Mitek ver 8.5.3.293

REVIEWED

All conventional framing to conform with Part 9 of O.B.C. 2012 (2019 amendment). Roof rafters that cross over or meet trusses to be min. 2x4 SPF #2 @ 24" o/c with a vertical post to the truss at each cross point. Vertical posts longer than 6' to have lateral bracing so that the distance between the post end points and lateral bracing does not exceed 6'.

ASPHALT SHINGLES
FINISHED OVERHANG: 12"
2x6 EXTERIOR WALLS
2x6 FASCIA BOARD
HEEL: R.T.M.C.

DESIGN CONFORMS WITH OBC 2012 (2019 amendment) OCCUPANCY: RESIDENTIAL | PART: 9
Ss = 43.8 psf | Sr = 8.4 psf

DESIGN LOADS:
TCSL = 32.5 psf
TCDL = 6.0 psf
BCLL = 0.0 psf
BCDL = 7.4 psf

HARDWARE:
LUS24 - (**O**)
LJS26DS - (**V**)
HGUS26-2 - (**XX**)

DENOTES:
CONVENTIONAL FRAMING

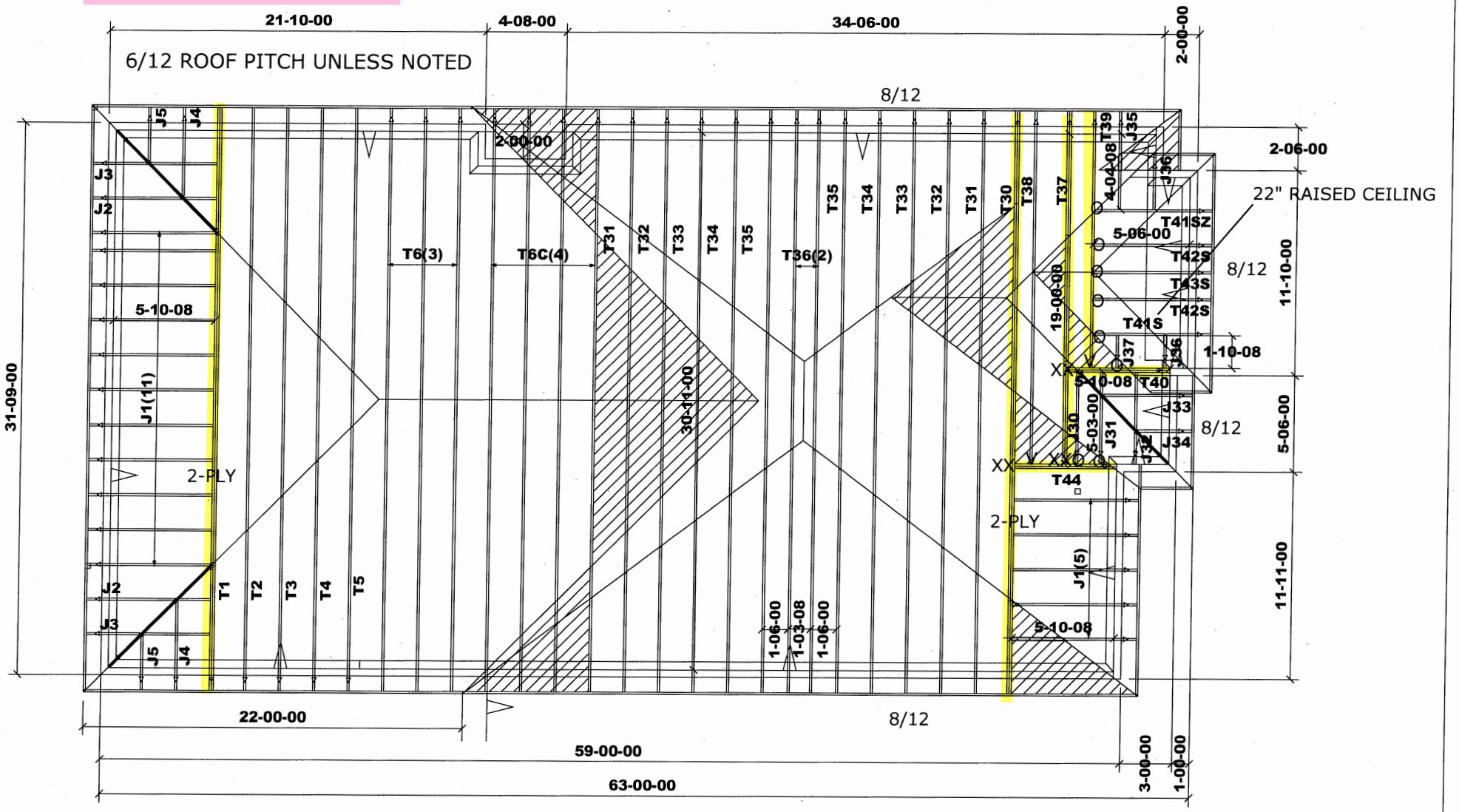

TAMARACK ROOF TRUSSES INC.	Job Track: **50465**	Builder / Location: **BAYVIEW WELLINGTON / BRADFORD**	Model / Elevation: **S38-21 / C**
	Plan Log: **205569**	Project: **GREEN VALLEY EAST**	
	Layout ID: **423617**	Date: 2022-06-28 Sales: Rick DiCiano Designer: JG	

THESE DRAWINGS CONSTITUTE THE PROPERTY OF TAMARACK ROOF TRUSSES INC., SHALL NOT BE REPRODUCED, PUBLISHED, OR REDISTRIBUTED IN ANY MANNER OR UTILIZED FOR ANY PURPOSE OTHER THAN THE MANUFACTURE OF TRUSSES BY TAMARACK ROOF TRUSSES INC AND WILL BE RETRACTED BY TAMARACK ROOF TRUSSES INC IF UTILIZED FOR ANY OTHER PURPOSE.

Mitek ver 8.5.3.233

REVIEWED

All conventional framing to conform with Part 9 of O.B.C. 2012 (2019 amendment). Roof rafters that cross over or meet trusses to be min. 2x4 SPF #2 @ 24" o/c with a vertical post to the truss at each cross point. Vertical posts longer than 6' to have lateral bracing so that the distance between the post end points and lateral bracing does not exceed 6'.

ASPHALT SHINGLES
FINISHED OVERHANG: 12"
2x6 EXTERIOR WALLS
2x6 FASCIA BOARD
HEEL: R.T.M.C.

DESIGN CONFORMS WITH OBC 2012 (2019 amendment) OCCUPANCY: RESIDENTIAL | PART: 9
Ss = 43.8 psf | Sr = 8.4 psf

DESIGN LOADS:
TCSL = 32.5 psf
TCDL = 6.0 psf
BCLL = 0.0 psf
BCDL = 7.4 psf

HARDWARE:
LUS24 - (**O**)
LJS26DS - (**V**)
HGUS26-2 - (**XX**)
TC26- (@)

DENOTES:
CONVENTIONAL FRAMING

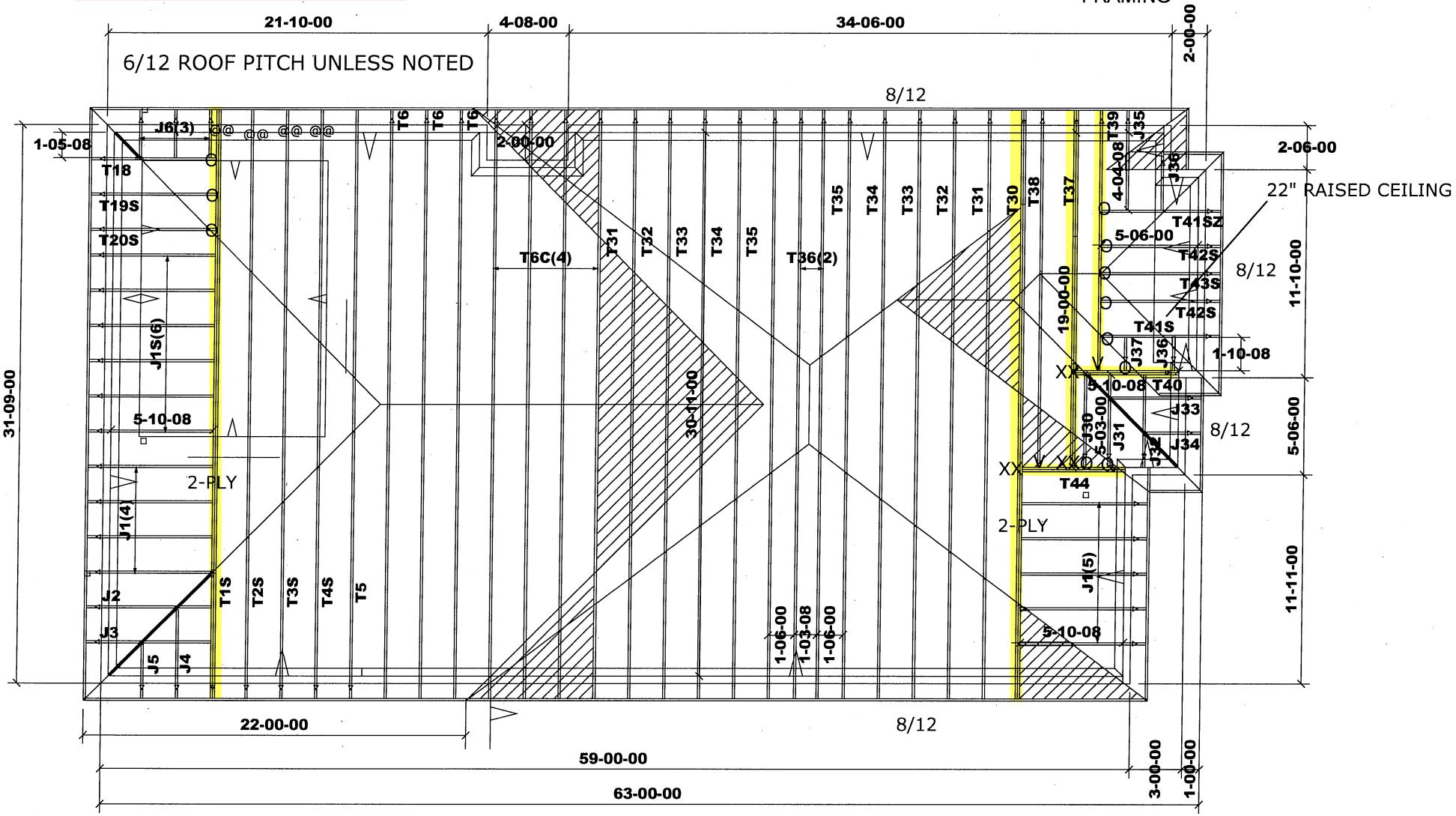

TAMARACK ROOF TRUSSES INC.	Job Track: **50465**	Builder / Location: **BAYVIEW WELLINGTON / BRADFORD**	Model / Elevation: **S38-21 / C-OPT.WITH COFF.**
	Plan Log: **205569**	Project: **GREEN VALLEY EAST**	
	Layout ID: **423616**	Date: 2022-06-28 Sales: Rick DiCiano Designer: JG	

THESE DRAWINGS CONSTITUTE THE PROPERTY OF TAMARACK ROOF TRUSSES INC., SHALL NOT BE REPRODUCED, PUBLISHED, OR REDISTRIBUTED IN ANY MANNER OR UTILIZED FOR ANY PURPOSE OTHER THAN THE MANUFACTURE OF TRUSSES BY TAMARACK ROOF TRUSSES INC AND WILL BE RETRACTED BY TAMARACK ROOF TRUSSES INC IF UTILIZED FOR ANY OTHER PURPOSE.

Mitek Ver 8.5.3.233

REVIEWED

All conventional framing to conform with Part 9 of O.B.C. 2012 (2019 amendment). Roof rafters that cross over or meet trusses to be min. 2x4 SPF #2 @ 24" o/c with a vertical post to the truss at each cross point. Vertical posts longer than 6' to have lateral bracing so that the distance between the post end points and lateral bracing does not exceed 6'.

ASPHALT SHINGLES
FINISHED OVERHANG: 12"
2x6 EXTERIOR WALLS
2x6 FASCIA BOARD
HEEL: R.T.M.C.

DESIGN CONFORMS WITH OBC 2012 (2019 amendment) OCCUPANCY: RESIDENTIAL | PART: 9
Ss = 43.8 psf | Sr = 8.4 psf

DESIGN LOADS:
TCSL = 32.5 psf
TCDL = 6.0 psf
BCLL = 0.0 psf
BCDL = 7.4 psf

HARDWARE:
LUS24 - (O)
LJS26DS - (V)
HGUS26-2 - (XX)

DENOTES: CONVENTIONAL FRAMING

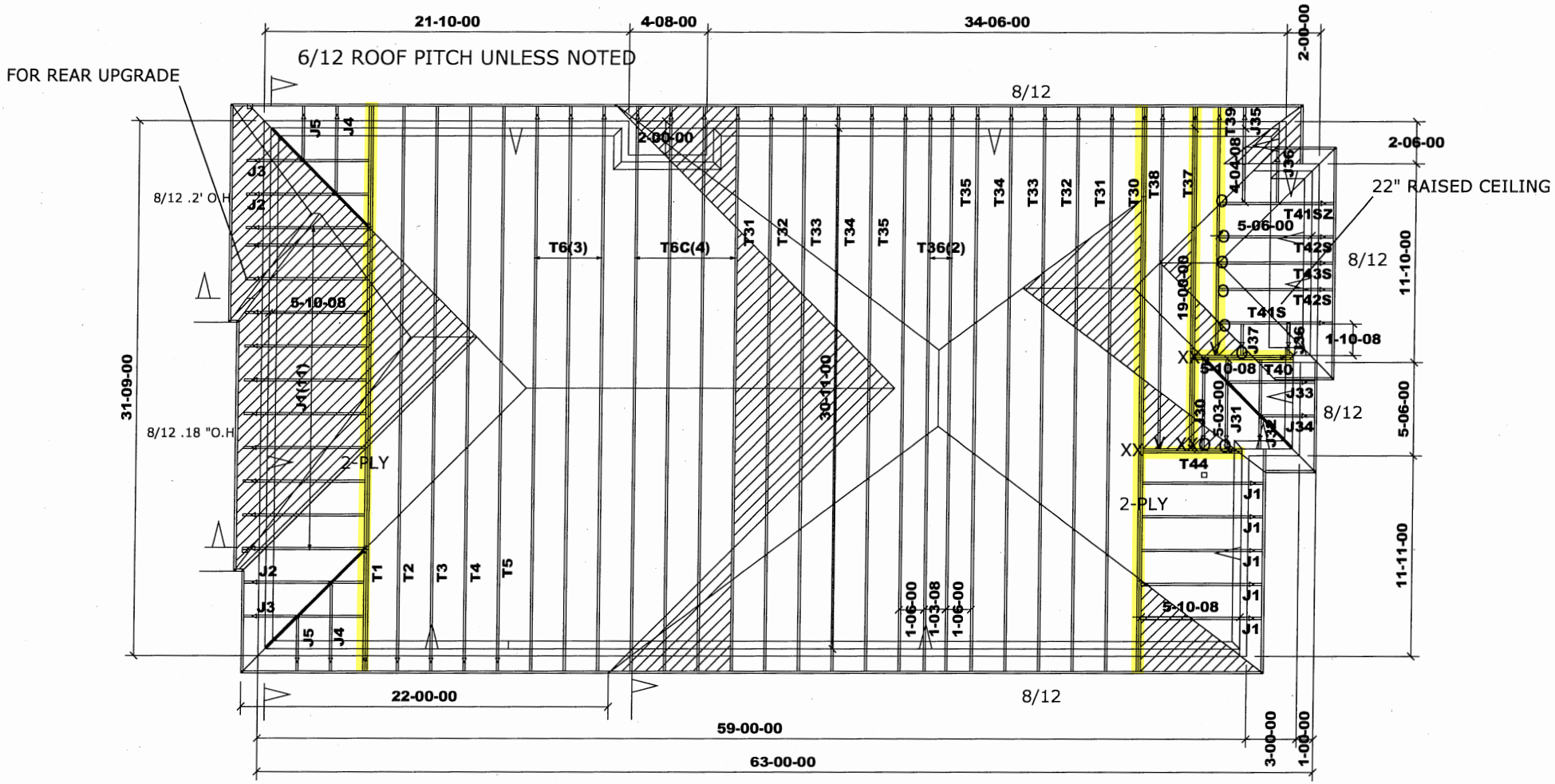

TAMARACK ROOF TRUSSES INC.	Job Track: 50465	Builder / Location: BAYVIEW WELLINGTON / BRADFORD	Model / Elevation: S38-21 / C-REAR UPGRADE
	Plan Log: 205569	Project: GREEN VALLEY EAST	
	Layout ID: 423617	Date: 2022-06-28 Sales: Rick DiCiano Designer: JG	

THESE DRAWINGS CONSTITUTE THE PROPERTY OF TAMARACK ROOF TRUSSES INC., SHALL NOT BE REPRODUCED, PUBLISHED, OR REDISTRIBUTED IN ANY MANNER OR UTILIZED FOR ANY PURPOSE OTHER THAN THE MANUFACTURE OF TRUSSES BY TAMARACK ROOF TRUSSES INC AND WILL BE RETRACTED BY TAMARACK ROOF TRUSSES INC IF UTILIZED FOR ANY OTHER PURPOSE.

Mitek ver 8.5.3.233

REVIEWED

DELIVERY SHIPLIST

TAMARACK ROOF TRUSSES INC.
ALPA LUMBER GROUP

Lumber Yard:	TAMARACK LUMBER	Job Track:	50465
Builder:	BAYVIEW WELLINGTON	PlanLog:	205569
Project:	GREEN VALLEY EAST	Layout ID:	423611
Location:	BRADFORD	Ref #	
Model:	S38-21	Page:	1 of 3
Lot #:		Date:	06-28-2022
Elevation:	A	Designer:	
		Sales Rep:	Rick DiCiano

Roof Trusses

PROFILE	QTY PLY	MARK TYPE	PITCH	SPAN	HEIGHT	LUMBER	OVERHANG LEFT RIGHT	HEEL HEIGHT LEFT RIGHT	LBS. BFT.	BUNDLE # STACK #	LOAD BY REMARKS
	1 2-ply	T1 Hip Girder	6 /12	**30-11-00**	4-01-04	2 x 4 2 x 6	1-03-08 1-03-08	1-02-00 1-02-00	277.92 172.67		
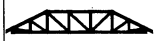	1	T2 Hip	6 /12	**30-11-00**	5-01-04	2 x 4	1-03-08 1-03-08	1-02-00 1-02-00	126.38 79.83		
	1	T3 Hip	6 /12	**30-11-00**	6-01-04	2 x 4	1-03-08 1-03-08	1-02-00 1-02-00	126.27 79.33		
	1	T4 Hip	6 /12	**30-11-00**	7-01-04	2 x 4	1-03-08 1-03-08	1-02-00 1-02-00	127.71 79.33		
	1	T5 Hip	6 /12	**30-11-00**	8-01-04	2 x 4	1-03-08 1-03-08	1-02-00 1-02-00	136.86 86.17		
	3	T6 Common	6 /12	**30-11-00**	8-10-12	2 x 4	1-03-08 1-03-08	1-02-00 1-02-00	377.71 235.50		
	1	T6C Common	6 /12	**30-11-00**	8-10-12	2 x 4	1-03-08 1-03-08	1-02-00 1-02-00	125.9 78.50		
	1 2-ply	T7 Hip Girder	10 /12	**30-11-00**	4-01-04	2 x 4 2 x 6	1-03-08 1-03-08	1-07-11 1-07-11	295.71 186.67		
	1	T8 Hip	10 /12	**30-11-00**	5-01-04	2 x 4	1-03-08 1-03-08	1-07-11 1-07-11	137.73 88.83		
	1	T8C Hip	10 /12	**30-11-00**	5-01-04	2 x 4	1-03-08 1-03-08	1-07-11 1-07-11	137.73 88.83		
	1	T9 Hip	10 /12	**30-11-00**	6-01-04	2 x 4	1-03-08 1-03-08	1-07-11 1-07-11	144.72 92.33		
	1	T9C Hip	10 /12	**30-11-00**	6-01-04	2 x 4	1-03-08 1-03-08	1-07-11 1-07-11	144.72 92.33		
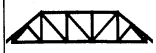	2	T10 Hip	10 /12	**30-11-00**	7-01-04	2 x 4	1-03-08 1-03-08	1-07-11 1-07-11	286.94 178.33		
	2	T11 Hip	10 /12	**30-11-00**	8-01-04	2 x 4	1-03-08 1-03-08	1-07-11 1-07-11	302.7 189.67		

REVIEWED

DELIVERY SHIPLIST

TAMARACK ROOF TRUSSES INC.
ALPA LUMBER GROUP

Lumber Yard:	TAMARACK LUMBER	Job Track:	50465
Builder:	BAYVIEW WELLINGTON	PlanLog:	205569
Project:	GREEN VALLEY EAST	Layout ID:	423611
Location:	BRADFORD	Ref #	
Model:	S38-21	Page:	2 of 3
Lot #:		Date:	06-28-2022
Elevation:	A	Designer:	
		Sales Rep:	Rick DiCiano

Roof Trusses

PROFILE	QTY PLY	MARK TYPE	PITCH	SPAN	HEIGHT	LUMBER	OVERHANG LEFT RIGHT	HEEL HEIGHT LEFT RIGHT	LBS. BFT.	BUNDLE # STACK #	LOAD BY REMARKS
	2	T12 Hip	10 /12	**30-11-00**	9-01-04	2 x 4	1-03-08 1-03-08	1-07-11 1-07-11	294.78 184.33		
	5	T13 Hip	10 /12	**30-11-00**	10-01-04	2 x 4	1-03-08 1-03-08	1-07-11 1-07-11	805.18 503.33		
	2	T14 Hip	10 /12	**30-11-00**	11-01-04	2 x 4	1-03-08 1-03-08	1-07-11 1-07-11	357.02 222.00		
	2	T15 Common	10 /12	**22-11-00**	11-02-04	2 x 4	1-03-08 1-03-08	1-07-11 1-07-11	231.44 143.33		
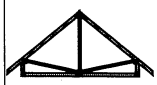	1	T16 Common	10 /12	**11-00-00**	6-02-11	2 x 4	1-03-08 1-03-08	1-07-11 1-07-11	49.09 32.33		
	1	G16 GABLE	10 /12	**11-00-00**	6-02-11	2 x 4	1-03-08 1-03-08	1-07-11 1-07-11	53.43 35.33		
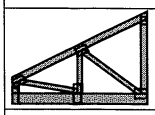	1 2-ply	T17 Jack-Closed Girder	6 /12	**5-10-08**	4-01-04	2 x 4 2 x 6		1-02-00 4-01-04	57.64 37.00		
	3	PB1 Piggyback	10 /12	**10-07-03**	2-00-00	2 x 4			92.86 63.00		
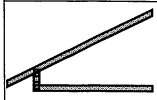	14	J1 Jack-Open	6 /12	**5-10-08**	4-01-04	2 x 4	1-03-08	1-02-00 4-01-04	235.12 149.33		
	2	J2 Jack-Open	6 /12	**3-09-07**	3-00-12	2 x 4	1-03-08 2-01-01	1-02-00 3-00-12	28.26 17.33		
	2	J3 Jack-Open	6 /12	**1-09-07**	2-00-12	2 x 4	1-03-08 4-01-01	1-02-00 2-00-12	23.16 14.67		
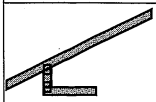	2	J4 Jack-Open	6 /12	**1-10-08**	3-00-12	2 x 4	1-03-08 1-10-15	1-02-00 2-01-04	19.14 12.00		
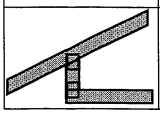	2	J5 Jack-Open	6 /12	**1-09-07**	2-00-12	2 x 4	1-03-08 1-01	1-02-00 2-00-12	14.04 9.33		

TOTAL # TRUSS= **60** TOTAL BFT OF ALL TRUSSES= **3151.63** BFT. TOTAL WEIGHT OF ALL TRSSES **5010.15** LBS

REVIEWED

DELIVERY SHIPLIST

TAMARACK ROOF TRUSSES INC.
ALPA LUMBER GROUP

Lumber Yard:	TAMARACK LUMBER	Job Track:	50465
Builder:	BAYVIEW WELLINGTON	PlanLog:	205569
Project:	GREEN VALLEY EAST	Layout ID:	423611
Location:	BRADFORD	Ref #	
Model:	S38-21	Page:	3 of 3
Lot #:		Date:	06-28-2022
Elevation:	A	Designer:	
		Sales Rep:	Rick DiCiano

HARDWARE

QTY	TYPE	MODEL	LENGTH
1	Hardware	HGUS26-2	
3	Hardware	LJS26DS	

TOTAL NUMBER OF ITEMS= **4**

REVIEWED

DELIVERY SHIPLIST

TAMARACK ROOF TRUSSES INC.
ALPA LUMBER GROUP

Lumber Yard:	TAMARACK LUMBER	Job Track:	50465
Builder:	BAYVIEW WELLINGTON	PlanLog:	205569
Project:	GREEN VALLEY EAST	Layout ID:	423610
Location:	BRADFORD	Ref #	
Model:	S38-21	Page:	1 of 3
Lot #:		Date:	06-28-2022
Elevation:	A-OPT.WITH COFF.	Designer:	
		Sales Rep:	Rick DiCiano

Roof Trusses

PROFILE	QTY PLY	MARK TYPE	PITCH	SPAN	HEIGHT	LUMBER	OVERHANG LEFT RIGHT	HEEL HEIGHT LEFT RIGHT	LBS. BFT.	BUNDLE # STACK #	LOAD BY REMARKS
	1 2-ply	T1S Hip Girder	6 /12	**30-11-00**	4-01-04	2 x 4	1-03-08 1-03-08	1-02-00 1-02-00	293.74 189.67		
	1	T2S Hip	6 /12	**30-11-00**	5-01-04	2 x 4	1-03-08 1-03-08	1-02-00 1-02-00	132.77 86.00		
	1	T3S Hip	6 /12	**30-11-00**	6-01-04	2 x 4	1-03-08 1-03-08	1-02-00 1-02-00	135.78 87.17		
	1	T4S Hip	6 /12	**30-11-00**	7-01-04	2 x 4	1-03-08 1-03-08	1-02-00 1-02-00	139.58 89.17		
	1	T5 Hip	6 /12	**30-11-00**	8-01-04	2 x 4	1-03-08 1-03-08	1-02-00 1-02-00	136.86 86.17		
	3	T6 Common	6 /12	**30-11-00**	8-10-12	2 x 4	1-03-08 1-03-08	1-02-00 1-02-00	377.71 235.50		
	1	T6C Common	6 /12	**30-11-00**	8-10-12	2 x 4	1-03-08 1-03-08	1-02-00 1-02-00	125.9 78.50		
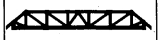	1 2-ply	T7 Hip Girder	10 /12	**30-11-00**	4-01-04	2 x 4 2 x 6	1-03-08 1-03-08	1-07-11 1-07-11	295.71 186.67		
	1	T8 Hip	10 /12	**30-11-00**	5-01-04	2 x 4	1-03-08 1-03-08	1-07-11 1-07-11	137.73 88.83		
	1	T8C Hip	10 /12	**30-11-00**	5-01-04	2 x 4	1-03-08 1-03-08	1-07-11 1-07-11	137.73 88.83		
	1	T9 Hip	10 /12	**30-11-00**	6-01-04	2 x 4	1-03-08 1-03-08	1-07-11 1-07-11	144.72 92.33		
	1	T9C Hip	10 /12	**30-11-00**	6-01-04	2 x 4	1-03-08 1-03-08	1-07-11 1-07-11	144.72 92.33		
	2	T10 Hip	10 /12	**30-11-00**	7-01-04	2 x 4	1-03-08 1-03-08	1-07-11 1-07-11	286.94 178.33		
	2	T11 Hip	10 /12	**30-11-00**	8-01-04	2 x 4	1-03-08 1-03-08	1-07-11 1-07-11	302.7 189.67		

REVIEWED

DELIVERY SHIPLIST

TAMARACK ROOF TRUSSES INC.
ALPA LUMBER GROUP

Lumber Yard:	TAMARACK LUMBER	Job Track:	50465
Builder:	BAYVIEW WELLINGTON	PlanLog:	205569
Project:	GREEN VALLEY EAST	Layout ID:	423610
Location:	BRADFORD	Ref #	
Model:	S38-21	Page:	2 of 3
Lot #:		Date:	06-28-2022
Elevation:	A-OPT.WITH COFF.	Designer:	
		Sales Rep:	Rick DiCiano

Roof Trusses

PROFILE	QTY PLY	MARK TYPE	PITCH	SPAN	HEIGHT	LUMBER	OVERHANG LEFT RIGHT	HEEL HEIGHT LEFT RIGHT	LBS. BFT.	BUNDLE # STACK #	LOAD BY REMARKS
	2	T12 Hip	10 /12	**30-11-00**	9-01-04	2 x 4	1-03-08 1-03-08	1-07-11 1-07-11	308.51 191.67		
	5	T13 Hip	10 /12	**30-11-00**	10-01-04	2 x 4	1-03-08 1-03-08	1-07-11 1-07-11	805.18 503.33		
	2	T14 Hip	10 /12	**30-11-00**	11-01-04	2 x 4	1-03-08 1-03-08	1-07-11 1-07-11	357.02 222.00		
	2	T15 Common	10 /12	**22-11-00**	11-02-04	2 x 4	1-03-08 1-03-08	1-07-11 1-07-11	241.77 148.67		
	1	T16 Common	10 /12	**11-00-00**	6-02-11	2 x 4	1-03-08 1-03-08	1-07-11 1-07-11	49.09 32.33		
	1	G16 GABLE	10 /12	**11-00-00**	6-02-11	2 x 4	1-03-08 1-03-08	1-07-11 1-07-11	53.43 35.33		
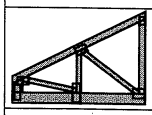	1 2-ply	T17 Jack-Closed Girder	6 /12	**5-10-08**	4-01-04	2 x 4 2 x 6		1-02-00 4-01-04	58.39 37.67		
	1	T18 Half Hip Girder	6 /12	**5-10-08**	1-10-12	2 x 4	1-03-08	1-02-00 1-10-12	23.24 16.50		
	1	T19S Half Hip	6 /12	**5-10-08**	2-10-12	2 x 4	1-03-08	1-02-00 1-10-12	26.1 19.50		
	1	T20S Half Hip	6 /12	**5-10-08**	3-10-12	2 x 4	1-03-08	1-02-00 2-10-12	26.41 18.67		
	3	PB1 Piggyback	10 /12	**10-07-03**	2-00-00	2 x 4			92.86 63.00		
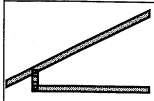	7	J1 Jack-Open	6 /12	**5-10-08**	4-01-04	2 x 4	1-03-08	1-02-00 4-01-04	117.56 74.67		
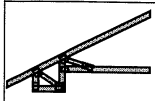	6	J1S Jack-Open	6 /12	**5-10-08**	4-01-04	2 x 4	1-03-08	1-02-00 3-01-04	123.72 88.00		
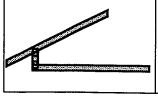	1	J2 Jack-Open	6 /12	**3-09-07**	3-00-12	2 x 4	1-03-08 2-01-01	1-02-00 3-00-12	14.13 8.67		

REVIEWED

DELIVERY SHIPLIST

TAMARACK ROOF TRUSSES INC.
ALPA LUMBER GROUP

Lumber Yard:	TAMARACK LUMBER	Job Track:	50465
Builder:	BAYVIEW WELLINGTON	PlanLog:	205569
Project:	GREEN VALLEY EAST	Layout ID:	423610
Location:	BRADFORD	Ref #	
Model:	S38-21	Page:	3 of 3
Lot #:		Date:	06-28-2022
Elevation:	A-OPT.WITH COFF.	Designer:	
		Sales Rep:	Rick DiCiano

Roof Trusses

PROFILE	QTY PLY	MARK TYPE	PITCH	SPAN	HEIGHT	LUMBER	OVERHANG LEFT RIGHT	HEEL HEIGHT LEFT RIGHT	LBS. BFT.	BUNDLE # STACK #	LOAD BY REMARKS
	1	J3 Jack-Open	6 /12	**1-09-07**	2-00-12	2 x 4	1-03-08 4-01-01	1-02-00 2-00-12	11.58 7.33		
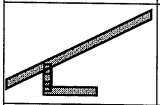	1	J4 Jack-Open	6 /12	**1-10-08**	3-00-12	2 x 4	1-03-08 1-10-15	1-02-00 2-01-04	9.57 6.00		
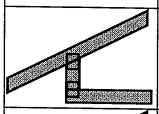	1	J5 Jack-Open	6 /12	**1-09-07**	2-00-12	2 x 4	1-03-08 1-01	1-02-00 2-00-12	7.02 4.67		
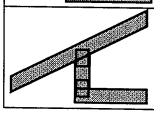	3	J6 Jack-Open	6 /12	**1-05-08**	1-10-12	2 x 4	1-03-08	1-02-00 1-10-12	18.38 14.00		

TOTAL # TRUSS= **61** TOTAL BFT OF ALL TRUSSES= **3261.18** BFT. TOTAL WEIGHT OF ALL TRSSES **5136.54** LBS

HARDWARE

QTY	TYPE	MODEL	LENGTH
1	Hardware	HGUS26-2	
3	Hardware	LJS26DS	
3	Hardware	LUS24	
8	Hardware	TC26	

TOTAL NUMBER OF ITEMS= **15**

REVIEWED

DELIVERY SHIPLIST

TAMARACK ROOF TRUSSES INC.
ALPA LUMBER GROUP

Lumber Yard:	TAMARACK LUMBER	Job Track:	50465
Builder:	BAYVIEW WELLINGTON	PlanLog:	205569
Project:	GREEN VALLEY EAST	Layout ID:	423612
Location:	BRADFORD	Ref #	
Model:	S38-21	Page:	1 of 2
Lot #:		Date:	06-28-2022
Elevation:	A-REAR UPGRADE	Designer:	
		Sales Rep:	Rick DiCiano

Roof Trusses

PROFILE	QTY PLY	MARK TYPE	PITCH	SPAN	HEIGHT	LUMBER	OVERHANG LEFT RIGHT	HEEL HEIGHT LEFT RIGHT	LBS. BFT.	BUNDLE # STACK #	LOAD BY REMARKS
	10	T6 Common	6 /12	30-11-00	8-10-12	2 x 4	1-03-08 1-03-08	1-02-00 1-02-00	1259.02 785.00		
	1	G6 GABLE	6 /12	30-11-00	8-10-12	2 x 4	1-03-08 1-03-08	1-02-00 1-02-00	136 86.83		
	1	T6C Common	6 /12	30-11-00	8-10-12	2 x 4	1-03-08 1-03-08	1-02-00 1-02-00	125.9 78.50		
	1 2-ply	T7 Hip Girder	10 /12	30-11-00	4-01-04	2 x 4 2 x 6	1-03-08 1-03-08	1-07-11 1-07-11	295.71 186.67		
	1	T8 Hip	10 /12	30-11-00	5-01-04	2 x 4	1-03-08 1-03-08	1-07-11 1-07-11	137.73 88.83		
	1	T8C Hip	10 /12	30-11-00	5-01-04	2 x 4	1-03-08 1-03-08	1-07-11 1-07-11	137.73 88.83		
	1	T9 Hip	10 /12	30-11-00	6-01-04	2 x 4	1-03-08 1-03-08	1-07-11 1-07-11	144.72 92.33		
	1	T9C Hip	10 /12	30-11-00	6-01-04	2 x 4	1-03-08 1-03-08	1-07-11 1-07-11	144.72 92.33		
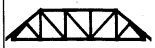	2	T10 Hip	10 /12	30-11-00	7-01-04	2 x 4	1-03-08 1-03-08	1-07-11 1-07-11	286.94 178.33		
	2	T11 Hip	10 /12	30-11-00	8-01-04	2 x 4	1-03-08 1-03-08	1-07-11 1-07-11	302.7 189.67		
	2	T12 Hip	10 /12	30-11-00	9-01-04	2 x 4	1-03-08 1-03-08	1-07-11 1-07-11	294.78 184.33		
	5	T13 Hip	10 /12	30-11-00	10-01-04	2 x 4	1-03-08 1-03-08	1-07-11 1-07-11	770.16 485.00		
	2	T14 Hip	10 /12	30-11-00	11-01-04	2 x 4	1-03-08 1-03-08	1-07-11 1-07-11	322.07 203.00		
	2	T15 Common	10 /12	22-11-00	11-02-04	2 x 4	1-03-08 1-03-08	1-07-11 1-07-11	216.89 135.33		

REVIEWED

DELIVERY SHIPLIST

TAMARACK ROOF TRUSSES INC.
ALPA LUMBER GROUP

Lumber Yard:	TAMARACK LUMBER	Job Track:	50465
Builder:	BAYVIEW WELLINGTON	PlanLog:	205569
Project:	GREEN VALLEY EAST	Layout ID:	423612
Location:	BRADFORD	Ref #	
Model:	S38-21	Page:	2 of 2
Lot #:		Date:	06-28-2022
Elevation:	A-REAR UPGRADE	Designer:	
		Sales Rep:	Rick DiCiano

Roof Trusses

PROFILE	QTY PLY	MARK TYPE	PITCH	SPAN	HEIGHT	LUMBER	OVERHANG LEFT RIGHT	HEEL HEIGHT LEFT RIGHT	LBS. BFT.	BUNDLE # STACK #	LOAD BY REMARKS
	1	T16 Common	10 /12	11-00-00	6-02-11	2 x 4	1-03-08 1-03-08	1-07-11 1-07-11	49.09 32.33		
	1	G16 GABLE	10 /12	11-00-00	6-02-11	2 x 4	1-03-08 1-03-08	1-07-11 1-07-11	53.43 35.33		
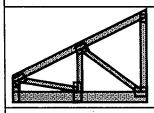	1 2-ply	T17 Jack-Closed Girder	6 /12	5-10-08	4-01-04	2 x 4 2 x 6		1-02-00 4-01-04	57.64 37.00		
	3	PB1 Piggyback	10 /12	10-07-03	2-00-00	2 x 4			92.86 63.00		
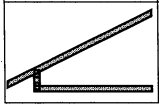	3	J1 Jack-Open	6 /12	5-10-08	4-01-04	2 x 4	1-03-08	1-02-00 4-01-04	50.38 32.00		

TOTAL # TRUSS= **43** TOTAL BFT OF ALL TRUSSES= **3074.64** BFT. TOTAL WEIGHT OF ALL TRSSES **4878.46** LBS

HARDWARE

QTY	TYPE	MODEL	LENGTH
3	Hardware	LJS26DS	
1	Hardware	HGUS26-2	

TOTAL NUMBER OF ITEMS= **4**

REVIEWED

DELIVERY SHIPLIST

TAMARACK ROOF TRUSSES INC.
ALPA LUMBER GROUP

Lumber Yard:	TAMARACK LUMBER	Job Track:	50465
Builder:	BAYVIEW WELLINGTON	PlanLog:	205569
Project:	GREEN VALLEY EAST	Layout ID:	423613
Location:	BRADFORD	Ref #	
Model:	S38-21	Page:	1 of 3
Lot #:		Date:	06-28-2022
Elevation:	B-OPT.WITH COFF.	Designer:	
		Sales Rep:	Rick DiCiano

Roof Trusses

PROFILE	QTY PLY	MARK TYPE	PITCH	SPAN	HEIGHT	LUMBER	OVERHANG LEFT RIGHT	HEEL HEIGHT LEFT RIGHT	LBS. BFT.	BUNDLE # STACK #	LOAD BY REMARKS
	1 2-ply	T1S Hip Girder	6 /12	**30-11-00**	4-01-04	2 x 4 2 x 6	1-03-08 1-03-08	1-02-00 1-02-00	293.38 189.00		
	1	T2S Hip	6 /12	**30-11-00**	5-01-04	2 x 4	1-03-08 1-03-08	1-02-00 1-02-00	132.52 86.33		
	1	T3S Hip	6 /12	**30-11-00**	6-01-04	2 x 4	1-03-08 1-03-08	1-02-00 1-02-00	135.27 86.50		
	1	T4S Hip	6 /12	**30-11-00**	7-01-04	2 x 4	1-03-08 1-03-08	1-02-00 1-02-00	139 88.50		
	1	T5 Hip	6 /12	**30-11-00**	8-01-04	2 x 4	1-03-08 1-03-08	1-02-00 1-02-00	133.41 84.17		
	3	T6 Common	6 /12	**30-11-00**	8-10-12	2 x 4	1-03-08 1-03-08	1-02-00 1-02-00	377.71 235.50		
	1	T6C Common	6 /12	**30-11-00**	8-10-12	2 x 4	1-03-08 1-03-08	1-02-00 1-02-00	125.9 78.50		
	1	T8 Hip	10 /12	**30-11-00**	5-01-04	2 x 4	1-03-08 1-03-08	1-07-11 1-07-11	137.73 88.83		
	1	T8C Hip	10 /12	**30-11-00**	5-01-04	2 x 4	1-03-08 1-03-08	1-07-11 1-07-11	137.73 88.83		
	1	T9 Hip	10 /12	**30-11-00**	6-01-04	2 x 4	1-03-08 1-03-08	1-07-11 1-07-11	144.72 92.33		
	1	T9C Hip	10 /12	**30-11-00**	6-01-04	2 x 4	1-03-08 1-03-08	1-07-11 1-07-11	144.72 92.33		
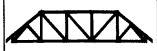	2	T10 Hip	10 /12	**30-11-00**	7-01-04	2 x 4	1-03-08 1-03-08	1-07-11 1-07-11	286.94 178.33		
	2	T11 Hip	10 /12	**30-11-00**	8-01-04	2 x 4	1-03-08 1-03-08	1-07-11 1-07-11	302.7 189.67		
	2	T12 Hip	10 /12	**30-11-00**	9-01-04	2 x 4	1-03-08 1-03-08	1-07-11 1-07-11	294.78 184.33		

REVIEWED

DELIVERY SHIPLIST

TAMARACK ROOF TRUSSES INC.
ALPA LUMBER GROUP

Lumber Yard:	TAMARACK LUMBER	Job Track:	50465
Builder:	BAYVIEW WELLINGTON	PlanLog:	205569
Project:	GREEN VALLEY EAST	Layout ID:	423613
Location:	BRADFORD	Ref #	
Model:	S38-21	Page:	2 of 3
Lot #:		Date:	06-28-2022
Elevation:	B-OPT.WITH COFF.	Designer:	
		Sales Rep:	Rick DiCiano

Roof Trusses

PROFILE	QTY PLY	MARK TYPE	PITCH	SPAN	HEIGHT	LUMBER	OVERHANG LEFT RIGHT	HEEL HEIGHT LEFT RIGHT	LBS. BFT.	BUNDLE # STACK #	LOAD BY REMARKS
	2	T13 Hip	10 /12	**30-11-00**	10-01-04	2 x 4	1-03-08 1-03-08	1-07-11 1-07-11	322.07 201.33		
	3	T14 Hip	10 /12	**30-11-00**	11-01-04	2 x 4	1-03-08 1-03-08	1-07-11 1-07-11	535.53 333.00		
	1	T18 Half Hip Girder	6 /12	**5-10-08**	1-10-12	2 x 4	1-03-08	1-02-00 1-10-12	23.24 16.50		
	1	T19S Half Hip	6 /12	**5-10-08**	2-10-12	2 x 4	1-03-08	1-02-00 1-10-12	25.02 18.50		
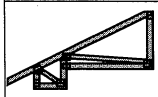	1	T20S Half Hip	6 /12	**5-10-08**	3-10-12	2 x 4	1-03-08	1-02-00 2-10-12	25.33 17.67		
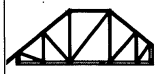	1	T21 Hip Girder	10 /12	**19-00-00**	7-09-07	2 x 4 2 x 6	1-03-08	1-07-11 2-10-11	108.41 69.33		
	1	T22 Hip	10 /12	**19-00-00**	9-05-07	2 x 4	1-03-08	1-07-11 2-10-11	103.71 66.33		
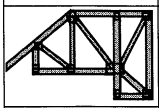	1	T23S Half Hip Girder	10 /12	**5-10-08**	4-05-07	2 x 4	1-03-08	1-07-11 4-05-07	37.3 24.00		
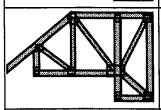	1	T23SZ Half Hip Girder	10 /12	**5-10-08**	4-05-07	2 x 4	1-03-08	1-07-11 4-05-07	37.3 24.00		
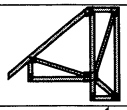	2	T24S Half Hip	10 /12	**5-10-08**	6-01-07	2 x 4	1-03-08	1-07-11 6-01-07	79.61 51.67		
	4	T25S Jack-Closed	10 /12	**5-10-08**	7-09-07	2 x 4	1-03-08	1-07-11 7-09-07	174.95 110.67		
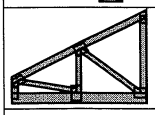	1 2-ply	T26 Jack-Closed Girder	6 /12	**5-10-08**	4-01-04	2 x 4 2 x 6		1-02-00 4-01-04	57.64 37.00		
	1 2-ply	T27 Hip Girder	10 /12	**30-11-00**	4-01-04	2 x 4 2 x 6	1-03-08 1-03-08	1-07-11 1-07-11	295.17 186.67		
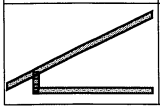	9	J1 Jack-Open	6 /12	**5-10-08**	4-01-04	2 x 4	1-03-08	1-02-00 4-01-04	151.15 96.00		

REVIEWED

DELIVERY SHIPLIST

TAMARACK ROOF TRUSSES INC.
ALPA LUMBER GROUP

Lumber Yard:	TAMARACK LUMBER	Job Track:	50465
Builder:	BAYVIEW WELLINGTON	PlanLog:	205569
Project:	GREEN VALLEY EAST	Layout ID:	423613
Location:	BRADFORD	Ref #	
Model:	S38-21	Page:	3 of 3
Lot #:		Date:	06-28-2022
Elevation:	B-OPT.WITH COFF.	Designer:	
		Sales Rep:	Rick DiCiano

Roof Trusses

PROFILE	QTY PLY	MARK TYPE	PITCH	SPAN	HEIGHT	LUMBER	OVERHANG LEFT RIGHT	HEEL HEIGHT LEFT RIGHT	LBS. BFT.	BUNDLE # STACK #	LOAD BY REMARKS
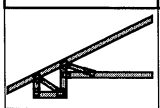	6	J1S Jack-Open	6 /12	**5-10-08**	4-01-04	2 x 4	1-03-08	1-02-00 3-01-04	123.72 88.00		
	1	J2 Jack-Open	6 /12	**3-09-07**	3-00-12	2 x 4	1-03-08 2-01-01	1-02-00 3-00-12	14.13 8.67		
	1	J3 Jack-Open	6 /12	**1-09-07**	2-00-12	2 x 4	1-03-08 4-01-01	1-02-00 2-00-12	11.58 7.33		
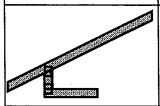	1	J4 Jack-Open	6 /12	**1-10-08**	3-00-12	2 x 4	1-03-08 1-10-15	1-02-00 2-01-04	9.57 6.00		
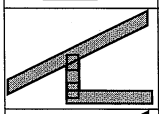	1	J5 Jack-Open	6 /12	**1-09-07**	2-00-12	2 x 4	1-03-08 1-01	1-02-00 2-00-12	7.02 4.67		
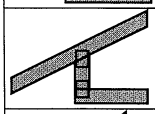	3	J6 Jack-Open	6 /12	**1-05-08**	1-10-12	2 x 4	1-03-08	1-02-00 1-10-12	18.38 14.00		
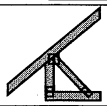	2	J20 Jack-Open	10 /12	**1-10-08**	3-02-07	2 x 4	1-03-08	1-07-11 3-02-07	19.85 14.00		
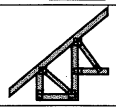	2	J21S Jack-Open	10 /12	**3-04-08**	4-05-07	2 x 4	1-03-08	1-07-11 3-02-07	36.61 25.33		

TOTAL # TRUSS= **68** TOTAL BFT OF ALL TRUSSES= **3183.82** BFT. TOTAL WEIGHT OF ALL TRSSES **5003.79** LBS

HARDWARE

QTY	TYPE	MODEL	LENGTH
8	Hardware	TC26	
1	Hardware	HGUS26-2	
2	Hardware	LJS26DS	
11	Hardware	LUS24	

TOTAL NUMBER OF ITEMS= **22**

REVIEWED

DELIVERY SHIPLIST

TAMARACK ROOF TRUSSES INC.
ALPA LUMBER GROUP

Lumber Yard:	TAMARACK LUMBER	Job Track:	50465
Builder:	BAYVIEW WELLINGTON	PlanLog:	205569
Project:	GREEN VALLEY EAST	Layout ID:	423614
Location:	BRADFORD	Ref #	
Model:	S38-21	Page:	1 of 3
Lot #:		Date:	06-28-2022
Elevation:	B	Designer:	
		Sales Rep:	Rick DiCiano

Roof Trusses

PROFILE	QTY PLY	MARK TYPE	PITCH	SPAN	HEIGHT	LUMBER	OVERHANG LEFT RIGHT	HEEL HEIGHT LEFT RIGHT	LBS. BFT.	BUNDLE # STACK #	LOAD BY REMARKS
	1 2-ply	T1 Hip Girder	6 /12	**30-11-00**	4-01-04	2 x 4 2 x 6	1-03-08 1-03-08	1-02-00 1-02-00	277.92 172.67		
	1	T2 Hip	6 /12	**30-11-00**	5-01-04	2 x 4	1-03-08 1-03-08	1-02-00 1-02-00	126.63 79.50		
	1	T3 Hip	6 /12	**30-11-00**	6-01-04	2 x 4	1-03-08 1-03-08	1-02-00 1-02-00	126.27 79.33		
	1	T4 Hip	6 /12	**30-11-00**	7-01-04	2 x 4	1-03-08 1-03-08	1-02-00 1-02-00	127.71 79.33		
	1	T5 Hip	6 /12	**30-11-00**	8-01-04	2 x 4	1-03-08 1-03-08	1-02-00 1-02-00	133.41 84.17		
	3	T6 Common	6 /12	**30-11-00**	8-10-12	2 x 4	1-03-08 1-03-08	1-02-00 1-02-00	377.71 235.50		
	1	T6C Common	6 /12	**30-11-00**	8-10-12	2 x 4	1-03-08 1-03-08	1-02-00 1-02-00	125.9 78.50		
	1	T8 Hip	10 /12	**30-11-00**	5-01-04	2 x 4	1-03-08 1-03-08	1-07-11 1-07-11	137.73 88.83		
	1	T8C Hip	10 /12	**30-11-00**	5-01-04	2 x 4	1-03-08 1-03-08	1-07-11 1-07-11	137.73 88.83		
	1	T9 Hip	10 /12	**30-11-00**	6-01-04	2 x 4	1-03-08 1-03-08	1-07-11 1-07-11	144.72 92.33		
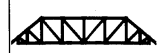	1	T9C Hip	10 /12	**30-11-00**	6-01-04	2 x 4	1-03-08 1-03-08	1-07-11 1-07-11	144.72 92.33		
	2	T10 Hip	10 /12	**30-11-00**	7-01-04	2 x 4	1-03-08 1-03-08	1-07-11 1-07-11	286.94 178.33		
	2	T11 Hip	10 /12	**30-11-00**	8-01-04	2 x 4	1-03-08 1-03-08	1-07-11 1-07-11	302.7 189.67		
	2	T12 Hip	10 /12	**30-11-00**	9-01-04	2 x 4	1-03-08 1-03-08	1-07-11 1-07-11	294.78 184.33		

REVIEWED

DELIVERY SHIPLIST

TAMARACK ROOF TRUSSES INC.
ALPA LUMBER GROUP

Lumber Yard:	TAMARACK LUMBER	Job Track:	50465
Builder:	BAYVIEW WELLINGTON	PlanLog:	205569
Project:	GREEN VALLEY EAST	Layout ID:	423614
Location:	BRADFORD	Ref #	
Model:	S38-21	Page:	2 of 3
Lot #:		Date:	06-28-2022
Elevation:	B	Designer:	
		Sales Rep:	Rick DiCiano

Roof Trusses

PROFILE	QTY PLY	MARK TYPE	PITCH	SPAN	HEIGHT	LUMBER	OVERHANG LEFT RIGHT	HEEL HEIGHT LEFT RIGHT	LBS. BFT.	BUNDLE # STACK #	LOAD BY REMARKS
	2	T13 Hip	10 /12	**30-11-00**	10-01-04	2 x 4	1-03-08 1-03-08	1-07-11 1-07-11	322.07 201.33		
	3	T14 Hip	10 /12	**30-11-00**	11-01-04	2 x 4	1-03-08 1-03-08	1-07-11 1-07-11	535.53 333.00		
	1	T21 Hip Girder	10 /12	**19-00-00**	7-09-07	2 x 4 2 x 6	1-03-08	1-07-11 2-10-11	108.41 69.33		
	1	T22 Hip	10 /12	**19-00-00**	9-05-07	2 x 4	1-03-08	1-07-11 2-10-11	103.71 66.33		
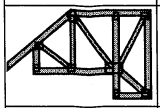	1	T23S Half Hip Girder	10 /12	**5-10-08**	4-05-07	2 x 4	1-03-08	1-07-11 4-05-07	37.3 24.00		
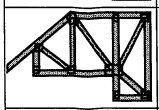	1	T23SZ Half Hip Girder	10 /12	**5-10-08**	4-05-07	2 x 4	1-03-08	1-07-11 4-05-07	37.3 24.00		
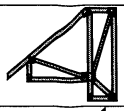	2	T24S Half Hip	10 /12	**5-10-08**	6-01-07	2 x 4	1-03-08	1-07-11 6-01-07	79.61 51.67		
	4	T25S Jack-Closed	10 /12	**5-10-08**	7-09-07	2 x 4	1-03-08	1-07-11 7-09-07	174.95 110.67		
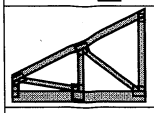	1 2-ply	T26 Jack-Closed Girder	6 /12	**5-10-08**	4-01-04	2 x 4 2 x 6		1-02-00 4-01-04	57.64 37.00		
	1 2-ply	T27 Hip Girder	10 /12	**30-11-00**	4-01-04	2 x 4 2 x 6	1-03-08 1-03-08	1-07-11 1-07-11	295.17 186.67		
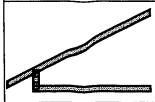	16	J1 Jack-Open	6 /12	**5-10-08**	4-01-04	2 x 4	1-03-08	1-02-00 4-01-04	268.71 170.67		
	2	J2 Jack-Open	6 /12	**3-09-07**	3-00-12	2 x 4	1-03-08 2-01-01	1-02-00 3-00-12	28.26 17.33		
	2	J3 Jack-Open	6 /12	**1-09-07**	2-00-12	2 x 4	1-03-08 4-01-01	1-02-00 2-00-12	23.16 14.67		
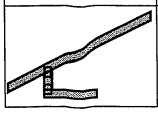	2	J4 Jack-Open	6 /12	**1-10-08**	3-00-12	2 x 4	1-03-08 1-10-15	1-02-00 2-01-04	19.14 12.00		

REVIEWED

DELIVERY SHIPLIST

TAMARACK ROOF TRUSSES INC.
ALPA LUMBER GROUP

Lumber Yard:	TAMARACK LUMBER	Job Track:	50465
Builder:	BAYVIEW WELLINGTON	PlanLog:	205569
Project:	GREEN VALLEY EAST	Layout ID:	423614
Location:	BRADFORD	Ref #	
Model:	S38-21	Page:	3 of 3
Lot #:		Date:	06-28-2022
Elevation:	B	Designer:	
		Sales Rep:	Rick DiCiano

Roof Trusses

PROFILE	QTY PLY	MARK TYPE	PITCH	SPAN	HEIGHT	LUMBER	OVERHANG LEFT RIGHT	HEEL HEIGHT LEFT RIGHT	LBS. BFT.	BUNDLE # STACK #	LOAD BY REMARKS
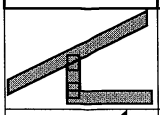	2	J5 Jack-Open	6 /12	**1-09-07**	2-00-12	2 x 4	1-03-08 1-01	1-02-00 2-00-12	14.04 9.33		
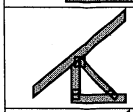	2	J20 Jack-Open	10 /12	**1-10-08**	3-02-07	2 x 4	1-03-08	1-07-11 3-02-07	19.85 14.00		
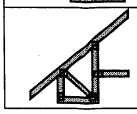	2	J21S Jack-Open	10 /12	**3-04-08**	4-05-07	2 x 4	1-03-08	1-07-11 3-02-07	33.78 23.33		

TOTAL # TRUSS= **67** TOTAL BFT OF ALL TRUSSES= **3088.98** BFT. TOTAL WEIGHT OF ALL TRSSES **4903.48** LBS

HARDWARE

QTY	TYPE	MODEL	LENGTH
1	Hardware	HGUS26-2	
2	Hardware	LJS26DS	
9	Hardware	LUS24	

TOTAL NUMBER OF ITEMS= **12**

REVIEWED

DELIVERY SHIPLIST

TAMARACK ROOF TRUSSES INC.
ALPA LUMBER GROUP

Lumber Yard:	TAMARACK LUMBER	Job Track:	50465
Builder:	BAYVIEW WELLINGTON	PlanLog:	205569
Project:	GREEN VALLEY EAST	Layout ID:	423615
Location:	BRADFORD	Ref #	
Model:	S38-21	Page:	1 of 3
Lot #:		Date:	06-28-2022
Elevation:	B-REAR UPGRADE	Designer:	
		Sales Rep:	Rick DiCiano

Roof Trusses

PROFILE	QTY PLY	MARK TYPE	PITCH	SPAN	HEIGHT	LUMBER	OVERHANG LEFT RIGHT	HEEL HEIGHT LEFT RIGHT	LBS. BFT.	BUNDLE # STACK #	LOAD BY REMARKS
	1	T2 Hip	6 /12	**30-11-00**	5-01-04	2 x 4	1-03-08 1-03-08	1-02-00 1-02-00	126.63 79.50		
	1	T3 Hip	6 /12	**30-11-00**	6-01-04	2 x 4	1-03-08 1-03-08	1-02-00 1-02-00	126.27 79.33		
	1	T4 Hip	6 /12	**30-11-00**	7-01-04	2 x 4	1-03-08 1-03-08	1-02-00 1-02-00	127.71 79.33		
	1	T5 Hip	6 /12	**30-11-00**	8-01-04	2 x 4	1-03-08 1-03-08	1-02-00 1-02-00	133.41 84.17		
	3	T6 Common	6 /12	**30-11-00**	8-10-12	2 x 4	1-03-08 1-03-08	1-02-00 1-02-00	377.71 235.50		
	1	T6C Common	6 /12	**30-11-00**	8-10-12	2 x 4	1-03-08 1-03-08	1-02-00 1-02-00	125.9 78.50		
	1	T8 Hip	10 /12	**30-11-00**	5-01-04	2 x 4	1-03-08 1-03-08	1-07-11 1-07-11	137.73 88.83		
	1	T8C Hip	10 /12	**30-11-00**	5-01-04	2 x 4	1-03-08 1-03-08	1-07-11 1-07-11	137.73 88.83		
	1	T9 Hip	10 /12	**30-11-00**	6-01-04	2 x 4	1-03-08 1-03-08	1-07-11 1-07-11	144.72 92.33		
	1	T9C Hip	10 /12	**30-11-00**	6-01-04	2 x 4	1-03-08 1-03-08	1-07-11 1-07-11	144.72 92.33		
	2	T10 Hip	10 /12	**30-11-00**	7-01-04	2 x 4	1-03-08 1-03-08	1-07-11 1-07-11	286.94 178.33		
	2	T11 Hip	10 /12	**30-11-00**	8-01-04	2 x 4	1-03-08 1-03-08	1-07-11 1-07-11	302.7 189.67		
	2	T12 Hip	10 /12	**30-11-00**	9-01-04	2 x 4	1-03-08 1-03-08	1-07-11 1-07-11	294.78 184.33		
	2	T13 Hip	10 /12	**30-11-00**	10-01-04	2 x 4	1-03-08 1-03-08	1-07-11 1-07-11	322.07 201.33		

REVIEWED

DELIVERY SHIPLIST

TAMARACK ROOF TRUSSES INC.
ALPA LUMBER GROUP

Lumber Yard:	TAMARACK LUMBER	Job Track:	50465
Builder:	BAYVIEW WELLINGTON	PlanLog:	205569
Project:	GREEN VALLEY EAST	Layout ID:	423615
Location:	BRADFORD	Ref #	
Model:	S38-21	Page:	2 of 3
Lot #:		Date:	06-28-2022
Elevation:	B-REAR UPGRADE	Designer:	
		Sales Rep:	Rick DiCiano

Roof Trusses

PROFILE	QTY PLY	MARK TYPE	PITCH	SPAN	HEIGHT	LUMBER	OVERHANG LEFT RIGHT	HEEL HEIGHT LEFT RIGHT	LBS. BFT.	BUNDLE # STACK #	LOAD BY REMARKS
	3	T14 Hip	10 /12	**30-11-00**	11-01-04	2 x 4	1-03-08 1-03-08	1-07-11 1-07-11	535.53 333.00		
	1	T21 Hip Girder	10 /12	**19-00-00**	7-09-07	2 x 4 2 x 6	1-03-08	1-07-11 2-10-11	108.41 69.33		
	1	T22 Hip	10 /12	**19-00-00**	9-05-07	2 x 4	1-03-08	1-07-11 2-10-11	103.71 66.33		
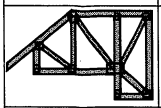	1	T23S Half Hip Girder	10 /12	**5-10-08**	4-05-07	2 x 4	1-03-08	1-07-11 4-05-07	37.3 24.00		
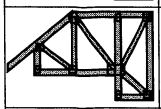	1	T23SZ Half Hip Girder	10 /12	**5-10-08**	4-05-07	2 x 4	1-03-08	1-07-11 4-05-07	37.3 24.00		
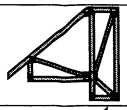	2	T24S Half Hip	10 /12	**5-10-08**	6-01-07	2 x 4	1-03-08	1-07-11 6-01-07	79.61 51.67		
	4	T25S Jack-Closed	10 /12	**5-10-08**	7-09-07	2 x 4	1-03-08	1-07-11 7-09-07	174.95 110.67		
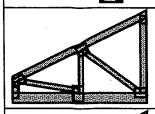	1 2-ply	T26 Jack-Closed Girder	6 /12	**5-10-08**	4-01-04	2 x 4 2 x 6		1-02-00 4-01-04	57.64 37.00		
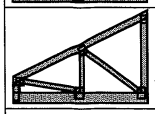	1 2-ply	T26Z5 Jack-Closed Girder	6 /12	**5-10-08**	4-01-04	2 x 4 2 x 6		1-02-00 4-01-04	57.64 37.00		
	1 2-ply	T27 Hip Girder	10 /12	**30-11-00**	4-01-04	2 x 4 2 x 6	1-03-08 1-03-08	1-07-11 1-07-11	295.17 186.67		
	1	T200 Hip Girder	6 /12	**19-06-00**	5-02-04	2 x 4 2 x 6	1-03-08	1-02-00 3-03-00	97.16 61.00		
	1 2-ply	T201 Hip Girder	6 /12	**30-11-00**	4-01-04	2 x 4 2 x 6	1-03-08 1-03-08	1-02-00 1-02-00	277.98 174.67		
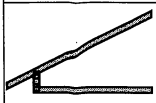	9	J1 Jack-Open	6 /12	**5-10-08**	4-01-04	2 x 4	1-03-08	1-02-00 4-01-04	151.15 96.00		
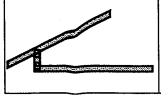	1	J2 Jack-Open	6 /12	**3-09-07**	3-00-12	2 x 4	1-03-08 2-01-01	1-02-00 3-00-12	14.13 8.67		

REVIEWED

DELIVERY SHIPLIST

TAMARACK ROOF TRUSSES INC.
ALPA LUMBER GROUP

Lumber Yard:	TAMARACK LUMBER	Job Track:	50465
Builder:	BAYVIEW WELLINGTON	PlanLog:	205569
Project:	GREEN VALLEY EAST	Layout ID:	423615
Location:	BRADFORD	Ref #	
Model:	S38-21	Page:	3 of 3
Lot #:		Date:	06-28-2022
Elevation:	B-REAR UPGRADE	Designer:	
		Sales Rep:	Rick DiCiano

Roof Trusses

PROFILE	QTY PLY	MARK TYPE	PITCH	SPAN	HEIGHT	LUMBER	OVERHANG LEFT RIGHT	HEEL HEIGHT LEFT RIGHT	LBS. BFT.	BUNDLE # STACK #	LOAD BY REMARKS
	1	J3 Jack-Open	6 /12	**1-09-07**	2-00-12	2 x 4	1-03-08 4-01-01	1-02-00 2-00-12	11.58 7.33		
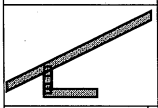	1	J4 Jack-Open	6 /12	**1-10-08**	3-00-12	2 x 4	1-03-08 1-10-15	1-02-00 2-01-04	9.57 6.00		
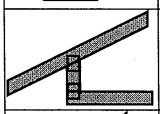	1	J5 Jack-Open	6 /12	**1-09-07**	2-00-12	2 x 4	1-03-08 1-01	1-02-00 2-00-12	7.02 4.67		
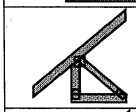	2	J20 Jack-Open	10 /12	**1-10-08**	3-02-07	2 x 4	1-03-08	1-07-11 3-02-07	20.24 14.00		
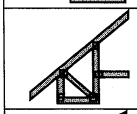	2	J21S Jack-Open	10 /12	**3-04-08**	4-05-07	2 x 4	1-03-08	1-07-11 3-02-07	33.78 23.33		
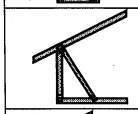	6	J200 Jack-Open	6 /12	**3-10-08**	5-02-04	2 x 4	1-03-08	3-03-00 5-02-04	102.29 64.00		
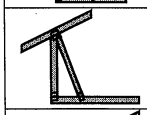	1	J201 Jack-Open	6 /12	**1-09-07**	4-01-12	2 x 4	1-03-08 2-01-01	3-03-00 4-01-12	14.13 9.33		
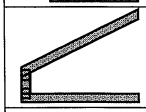	1	J202 Jack-Open	6 /12	**3-10-08**	3-01-04	2 x 4		1-02-00 3-01-04	10.32 6.67		
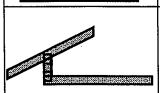	1	J203 Jack-Open	6 /12	**1-09-07**	2-00-12	2 x 4	1-03-08 2-01-01	1-02-00 2-00-12	9.3 6.00		
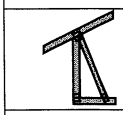	1	J204 Jack-Open	6 /12	**1-10-08**	4-01-12	2 x 4	1-03-08	3-03-00 4-02-04	11.88 8.00		
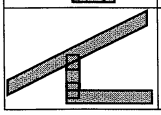	1	J205 Jack-Open	6 /12	**1-09-07**	2-00-12	2 x 4	1-03-08 1-01	1-02-00 2-00-12	7.02 4.67		

TOTAL # TRUSS= **70** TOTAL BFT OF ALL TRUSSES= **3186.32** BFT. TOTAL WEIGHT OF ALL TRSSES **5053.82** LBS

HARDWARE

QTY	TYPE	MODEL	LENGTH
3	Hardware	LJS26DS	
9	Hardware	LUS24	
2	Hardware	HGUS26-2	

TOTAL NUMBER OF ITEMS= **14**

REVIEWED

DELIVERY SHIPLIST

TAMARACK ROOF TRUSSES INC.
ALPA LUMBER GROUP

Lumber Yard:	TAMARACK LUMBER	Job Track:	50465
Builder:	BAYVIEW WELLINGTON	PlanLog:	205569
Project:	GREEN VALLEY EAST	Layout ID:	423616
Location:	BRADFORD	Ref #	
Model:	S38-21	Page:	1 of 4
Lot #:		Date:	06-28-2022
Elevation:	C-OPT.WITH COFF.	Designer:	
		Sales Rep:	Rick DiCiano

Roof Trusses

PROFILE	QTY PLY	MARK TYPE	PITCH	SPAN	HEIGHT	LUMBER	OVERHANG LEFT RIGHT	HEEL HEIGHT LEFT RIGHT	LBS. BFT.	BUNDLE # STACK #	LOAD BY REMARKS
	1 2-ply	T1S Hip Girder	6 /12	**30-11-00**	4-01-04	2 x 4 2 x 6	1-03-08 1-03-08	1-02-00 1-02-00	292.18 191.33		
	1	T2S Hip	6 /12	**30-11-00**	5-01-04	2 x 4	1-03-08 1-03-08	1-02-00 1-02-00	132.77 87.33		
	1	T3S Hip	6 /12	**30-11-00**	6-01-04	2 x 4	1-03-08 1-03-08	1-02-00 1-02-00	135.38 88.17		
	1	T4S Hip	6 /12	**30-11-00**	7-01-04	2 x 4	1-03-08 1-03-08	1-02-00 1-02-00	138.82 89.83		
	1	T5 Hip	6 /12	**30-11-00**	8-01-04	2 x 4	1-03-08 1-03-08	1-02-00 1-02-00	136.86 86.17		
	3	T6 Common	6 /12	**30-11-00**	8-10-12	2 x 4	1-03-08 1-03-08	1-02-00 1-02-00	377.71 235.50		
	4	T6C Common	6 /12	**30-11-00**	8-10-12	2 x 4	1-03-08 1-03-08	1-02-00 1-02-00	503.61 314.00		
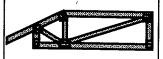	1	T18 Half Hip Girder	6 /12	**5-10-08**	1-10-12	2 x 4	1-03-08	1-02-00 1-10-12	23.24 16.50		
	1	T19S Half Hip	6 /12	**5-10-08**	2-10-12	2 x 4	1-03-08	1-02-00 1-10-12	25.02 18.50		
	1	T20S Half Hip	6 /12	**5-10-08**	3-10-12	2 x 4	1-03-08	1-02-00 2-10-12	25.33 17.67		
	1 2-ply	T30 Hip Girder	8 /12	**30-11-00**	4-01-06	2 x 6	1-03-08 1-03-08	1-04-13 1-04-13	325.32 200.00		
	2	T31 Hip	8 /12	**30-11-00**	5-01-04	2 x 4	1-03-08 1-03-08	1-04-13 1-04-13	255.15 159.67		
	2	T32 Hip	8 /12	**30-11-00**	6-01-04	2 x 4	1-03-08 1-03-08	1-04-13 1-04-13	263.33 164.00		
	2	T33 Hip	8 /12	**30-11-00**	7-01-04	2 x 4	1-03-08 1-03-08	1-04-13 1-04-13	266.88 168.33		

REVIEWED

DELIVERY SHIPLIST

TAMARACK ROOF TRUSSES INC.
ALPA LUMBER GROUP

Lumber Yard:	TAMARACK LUMBER	Job Track:	50465
Builder:	BAYVIEW WELLINGTON	PlanLog:	205569
Project:	GREEN VALLEY EAST	Layout ID:	423616
Location:	BRADFORD	Ref #	
Model:	S38-21	Page:	2 of 4
Lot #:		Date:	06-28-2022
Elevation:	C-OPT.WITH COFF.	Designer:	
		Sales Rep:	Rick DiCiano

Roof Trusses

PROFILE	QTY PLY	MARK TYPE	PITCH	SPAN	HEIGHT	LUMBER	OVERHANG LEFT RIGHT	HEEL HEIGHT LEFT RIGHT	LBS. BFT.	BUNDLE # STACK #	LOAD BY REMARKS
	2	T34 Hip	8 /12	**30-11-00**	8-01-04	2 x 4	1-03-08 1-03-08	1-04-13 1-04-13	279.45 174.00		
	2	T35 Hip	8 /12	**30-11-00**	9-01-04	2 x 4	1-03-08 1-03-08	1-04-13 1-04-13	279.45 173.33		
	2	T36 Hip	8 /12	**30-11-00**	9-10-04	2 x 4	1-03-08 1-03-08	1-04-13 1-04-13	282.07 176.67		
	1 2-ply	T37 Hip Girder	8 /12	**19-00-00**	5-03-13	2 x 4 2 x 6	1-03-08 1-03-08	1-04-13 1-04-13	188.13 115.67		
	1	T38 Hip	8 /12	**19-00-00**	6-07-13	2 x 4	1-03-08 1-03-08	1-04-13 1-04-13	85.07 55.83		
	1	T39 Common Girder	8 /12	**13-06-00**	6-08-13	2 x 4 2 x 6	1-03-08	1-04-13 3-00-13	70.29 43.67		
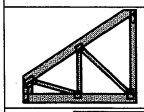	1 2-ply	T40 Half Hip Girder	8 /12	**5-10-08**	4-10-13	2 x 6		1-04-13 4-10-13	72.64 46.67		
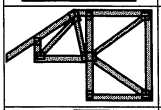	1	T41S Half Hip Girder	8 /12	**5-06-00**	4-03-13	2 x 4	1-03-08	1-02-13 4-03-13	33.99 23.17		
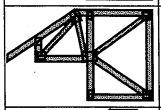	1	T41SZ Half Hip Girder	8 /12	**5-06-00**	4-03-13	2 x 4	1-03-08	1-02-13 4-03-13	33.99 23.17		
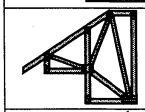	2	T42S Half Hip	8 /12	**5-06-00**	5-07-13	2 x 4	1-03-08	1-02-13 5-07-13	78.44 54.33		
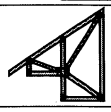	1	T43S Jack-Closed	8 /12	**5-06-00**	6-08-13	2 x 4	1-03-08	1-02-13 6-08-13	37.75 26.00		
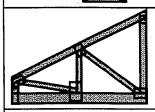	1 2-ply	T44 Jack-Closed Girder	6 /12	**5-10-08**	4-01-04	2 x 4 2 x 6		1-02-00 4-01-04	57.64 37.00		
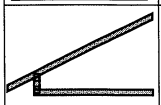	9	J1 Jack-Open	6 /12	**5-10-08**	4-01-04	2 x 4	1-03-08	1-02-00 4-01-04	151.15 96.00		
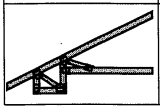	6	J1S Jack-Open	6 /12	**5-10-08**	4-01-04	2 x 4	1-03-08	1-02-00 3-01-04	123.72 88.00		

REVIEWED

DELIVERY SHIPLIST

TAMARACK ROOF TRUSSES INC.
ALPA LUMBER GROUP

Lumber Yard:	TAMARACK LUMBER	Job Track:	50465
Builder:	BAYVIEW WELLINGTON	PlanLog:	205569
Project:	GREEN VALLEY EAST	Layout ID:	423616
Location:	BRADFORD	Ref #	
Model:	S38-21	Page:	3 of 4
Lot #:		Date:	06-28-2022
Elevation:	C-OPT.WITH COFF.	Designer:	
		Sales Rep:	Rick DiCiano

Roof Trusses

PROFILE	QTY PLY	MARK TYPE	PITCH	SPAN	HEIGHT	LUMBER	OVERHANG LEFT RIGHT	HEEL HEIGHT LEFT RIGHT	LBS. BFT.	BUNDLE # STACK #	LOAD BY REMARKS
	1	J2 Jack-Open	6 /12	**3-09-07**	3-00-12	2 x 4	1-03-08 2-01-01	1-02-00 3-00-12	14.13 8.67		
	1	J3 Jack-Open	6 /12	**1-09-07**	2-00-12	2 x 4	1-03-08 4-01-01	1-02-00 2-00-12	11.58 7.33		
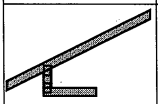	1	J4 Jack-Open	6 /12	**1-10-08**	3-00-12	2 x 4	1-03-08 1-10-15	1-02-00 2-01-04	9.57 6.00		
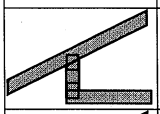	1	J5 Jack-Open	6 /12	**1-09-07**	2-00-12	2 x 4	1-03-08 1-01	1-02-00 2-00-12	7.02 4.67		
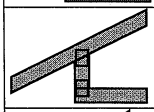	3	J6 Jack-Open	6 /12	**1-05-08**	1-10-12	2 x 4	1-03-08	1-02-00 1-10-12	18.38 14.00		
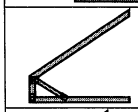	1	J30 Jack-Open	8 /12	**5-03-00**	4-10-13	2 x 4		1-04-13 4-10-13	16.08 10.33		
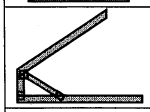	1	J31 Jack-Open	8 /12	**5-03-00**	3-11-02	2 x 4		1-04-13 4-10-13	14.08 9.00		
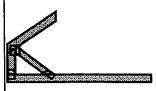	1	J32 Jack-Open	8 /12	**5-03-00**	2-07-02	2 x 4		1-04-13 4-10-13	11.14 7.67		
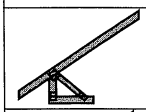	1	J33 Jack-Open	8 /12	**1-10-08**	3-11-02	2 x 4	1-03-08 1-10-15	1-04-13 2-07-13	11.71 7.67		
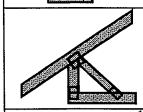	1	J34 Jack-Open	8 /12	**1-09-07**	2-07-02	2 x 4	1-03-08 1-01	1-04-13 2-07-02	8.9 5.67		
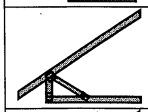	1	J35 Jack-Open	8 /12	**4-04-08**	4-03-13	2 x 4	1-03-08	1-04-13 4-03-13	15.66 10.33		
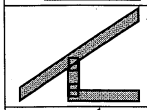	2	J36 Jack-Open	8 /12	**1-10-08**	2-05-13	2 x 4	1-03-08	1-02-13 2-05-13	15.2 9.33		
	1	J37 Jack-Open	8 /12	**1-10-08**	4-03-13	2 x 4		3-00-13 4-03-13	10.29 6.83		

TOTAL # TRUSS= **74** TOTAL BFT OF ALL TRUSSES= **3078.01** BFT. TOTAL WEIGHT OF ALL TRSSES **4839.11** LBS

REVIEWED

DELIVERY SHIPLIST

TAMARACK ROOF TRUSSES INC.
XLPA LUMBER GROUP

Lumber Yard:	TAMARACK LUMBER	Job Track:	50465
Builder:	BAYVIEW WELLINGTON	PlanLog:	205569
Project:	GREEN VALLEY EAST	Layout ID:	423616
Location:	BRADFORD	Ref #	
Model:	S38-21	Page:	4 of 4
Lot #:		Date:	06-28-2022
Elevation:	C-OPT.WITH COFF.	Designer:	
		Sales Rep:	Rick DiCiano

HARDWARE

QTY	TYPE	MODEL	LENGTH
3	Hardware	HGUS26-2	
2	Hardware	LJS26DS	
11	Hardware	LUS24	
8	Hardware	TC26	

TOTAL NUMBER OF ITEMS= **24**

REVIEWED

DELIVERY SHIPLIST

TAMARACK ROOF TRUSSES INC.
ALPA LUMBER GROUP

Lumber Yard:	TAMARACK LUMBER	Job Track:	50465
Builder:	BAYVIEW WELLINGTON	PlanLog:	205569
Project:	GREEN VALLEY EAST	Layout ID:	423617
Location:	BRADFORD	Ref #	
Model:	S38-21	Page:	1 of 3
Lot #:		Date:	06-28-2022
Elevation:	C	Designer:	
		Sales Rep:	Rick DiCiano

Roof Trusses

PROFILE	QTY PLY	MARK TYPE	PITCH	SPAN	HEIGHT	LUMBER	OVERHANG LEFT RIGHT	HEEL HEIGHT LEFT RIGHT	LBS. BFT.	BUNDLE # STACK #	LOAD BY REMARKS
	1 2-ply	T1 Hip Girder	6 /12	**30-11-00**	4-01-04	2 x 4 2 x 6	1-03-08 1-03-08	1-02-00 1-02-00	277.92 172.67		
	1	T2 Hip	6 /12	**30-11-00**	5-01-04	2 x 4	1-03-08 1-03-08	1-02-00 1-02-00	126.63 79.50		
	1	T3 Hip	6 /12	**30-11-00**	6-01-04	2 x 4	1-03-08 1-03-08	1-02-00 1-02-00	126.27 79.33		
	1	T4 Hip	6 /12	**30-11-00**	7-01-04	2 x 4	1-03-08 1-03-08	1-02-00 1-02-00	127.71 79.33		
	1	T5 Hip	6 /12	**30-11-00**	8-01-04	2 x 4	1-03-08 1-03-08	1-02-00 1-02-00	133.41 84.17		
	3	T6 Common	6 /12	**30-11-00**	8-10-12	2 x 4	1-03-08 1-03-08	1-02-00 1-02-00	377.71 235.50		
	4	T6C Common	6 /12	**30-11-00**	8-10-12	2 x 4	1-03-08 1-03-08	1-02-00 1-02-00	503.61 314.00		
	1 2-ply	T30 Hip Girder	8 /12	**30-11-00**	4-01-06	2 x 6	1-03-08 1-03-08	1-04-13 1-04-13	325.32 200.00		
	2	T31 Hip	8 /12	**30-11-00**	5-01-04	2 x 4	1-03-08 1-03-08	1-04-13 1-04-13	255.15 159.67		
	2	T32 Hip	8 /12	**30-11-00**	6-01-04	2 x 4	1-03-08 1-03-08	1-04-13 1-04-13	263.33 164.00		
	2	T33 Hip	8 /12	**30-11-00**	7-01-04	2 x 4	1-03-08 1-03-08	1-04-13 1-04-13	266.88 168.33		
	2	T34 Hip	8 /12	**30-11-00**	8-01-04	2 x 4	1-03-08 1-03-08	1-04-13 1-04-13	279.45 174.00		
	2	T35 Hip	8 /12	**30-11-00**	9-01-04	2 x 4	1-03-08 1-03-08	1-04-13 1-04-13	279.45 173.33		
	2	T36 Hip	8 /12	**30-11-00**	9-10-04	2 x 4	1-03-08 1-03-08	1-04-13 1-04-13	282.07 176.67		

REVIEWED

DELIVERY SHIPLIST

TAMARACK ROOF TRUSSES INC.
ALPA LUMBER GROUP

Lumber Yard:	TAMARACK LUMBER	Job Track:	50465
Builder:	BAYVIEW WELLINGTON	PlanLog:	205569
Project:	GREEN VALLEY EAST	Layout ID:	423617
Location:	BRADFORD	Ref #	
Model:	S38-21	Page:	2 of 3
Lot #:		Date:	06-28-2022
Elevation:	C	Designer:	
		Sales Rep:	Rick DiCiano

Roof Trusses

PROFILE	QTY PLY	MARK TYPE	PITCH	SPAN	HEIGHT	LUMBER	OVERHANG LEFT RIGHT	HEEL HEIGHT LEFT RIGHT	LBS. BFT.	BUNDLE # STACK #	LOAD BY REMARKS
	1 2-ply	T37 Hip Girder	8 /12	**19-00-00**	5-03-13	2 x 4 2 x 6	1-03-08 1-03-08	1-04-13 1-04-13	189.83 117.67		
	1	T38 Hip	8 /12	**19-00-00**	6-07-13	2 x 4	1-03-08 1-03-08	1-04-13 1-04-13	85.07 55.83		
	1	T39 Common Girder	8 /12	**13-06-00**	6-08-13	2 x 4 2 x 6	1-03-08	1-04-13 3-00-13	70.29 43.67		
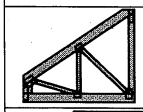	1 2-ply	T40 Half Hip Girder	8 /12	**5-10-08**	4-10-13	2 x 6		1-04-13 4-10-13	72.64 46.67		
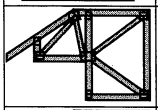	1	T41S Half Hip Girder	8 /12	**5-06-00**	4-03-13	2 x 4	1-03-08	1-02-13 4-03-13	33.99 23.17		
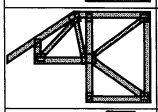	1	T41SZ Half Hip Girder	8 /12	**5-06-00**	4-03-13	2 x 4	1-03-08	1-02-13 4-03-13	33.99 23.17		
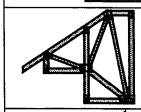	2	T42S Half Hip	8 /12	**5-06-00**	5-07-13	2 x 4	1-03-08	1-02-13 5-07-13	78.44 54.33		
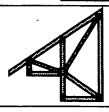	1	T43S Jack-Closed	8 /12	**5-06-00**	6-08-13	2 x 4	1-03-08	1-02-13 6-08-13	37.75 26.00		
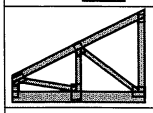	1 2-ply	T44 Jack-Closed Girder	6 /12	**5-10-08**	4-01-04	2 x 4 2 x 6		1-02-00 4-01-04	57.64 37.00		
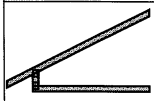	16	J1 Jack-Open	6 /12	**5-10-08**	4-01-04	2 x 4	1-03-08	1-02-00 4-01-04	268.71 170.67		
	2	J2 Jack-Open	6 /12	**3-09-07**	3-00-12	2 x 4	1-03-08 2-01-01	1-02-00 3-00-12	28.26 17.33		
	2	J3 Jack-Open	6 /12	**1-09-07**	2-00-12	2 x 4	1-03-08 4-01-01	1-02-00 2-00-12	23.16 14.67		
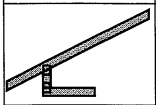	2	J4 Jack-Open	6 /12	**1-10-08**	3-00-12	2 x 4	1-03-08 1-10-15	1-02-00 2-01-04	19.14 12.00		
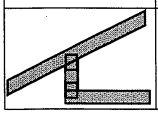	2	J5 Jack-Open	6 /12	**1-09-07**	2-00-12	2 x 4	1-03-08 1-01	1-02-00 2-00-12	14.04 9.33		

REVIEWED

DELIVERY SHIPLIST

TAMARACK ROOF TRUSSES INC.
ALPA LUMBER GROUP

Lumber Yard:	TAMARACK LUMBER	Job Track:	50465
Builder:	BAYVIEW WELLINGTON	PlanLog:	205569
Project:	GREEN VALLEY EAST	Layout ID:	423617
Location:	BRADFORD	Ref #	
Model:	S38-21	Page:	3 of 3
Lot #:		Date:	06-28-2022
Elevation:	C	Designer:	
		Sales Rep:	Rick DiCiano

Roof Trusses

PROFILE	QTY PLY	MARK TYPE	PITCH	SPAN	HEIGHT	LUMBER	OVERHANG LEFT RIGHT	HEEL HEIGHT LEFT RIGHT	LBS. BFT.	BUNDLE # STACK #	LOAD BY REMARKS
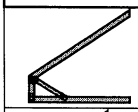	1	J30 Jack-Open	8 /12	**5-03-00**	4-10-13	2 x 4		1-04-13 4-10-13	16.08 10.33		
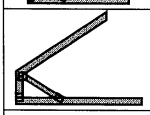	1	J31 Jack-Open	8 /12	**5-03-00**	3-11-02	2 x 4		1-04-13 4-10-13	14.08 9.00		
	1	J32 Jack-Open	8 /12	**5-03-00**	2-07-02	2 x 4		1-04-13 4-10-13	11.14 7.67		
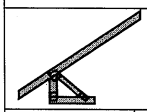	1	J33 Jack-Open	8 /12	**1-10-08**	3-11-02	2 x 4	1-03-08 1-10-15	1-04-13 2-07-13	11.71 7.67		
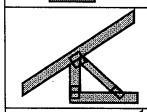	1	J34 Jack-Open	8 /12	**1-09-07**	2-07-02	2 x 4	1-03-08 1-01	1-04-13 2-07-02	8.9 5.67		
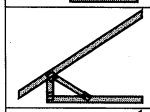	1	J35 Jack-Open	8 /12	**4-04-08**	4-03-13	2 x 4	1-03-08	1-04-13 4-03-13	15.66 10.33		
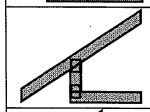	2	J36 Jack-Open	8 /12	**1-10-08**	2-05-13	2 x 4	1-03-08	1-02-13 2-05-13	15.2 9.33		
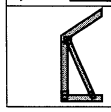	1	J37 Jack-Open	8 /12	**1-10-08**	4-03-13	2 x 4		3-00-13 4-03-13	10.29 6.83		

TOTAL # TRUSS= **73** TOTAL BFT OF ALL TRUSSES= **2978.84** BFT. TOTAL WEIGHT OF ALL TRSSES **4740.91** LBS

HARDWARE

QTY	TYPE	MODEL	LENGTH
3	Hardware	HGUS26-2	
2	Hardware	LJS26DS	
8	Hardware	LUS24	

TOTAL NUMBER OF ITEMS= **13**

REVIEWED

JOB NAME	TRUSS NAME	QUANTITY	PLY	JOB DESC.	DRWG NO.
423611	T1	1	2	BAYVIEW WELLINGTON TRUSS DESC.	

Tamarack Roof Truss, Burlington

Version 8.530 S Feb 23 2022 MiTek Industries, Inc. Fri Jun 24 14:02:27 2022 Page 1
ID:c3jyj23uDijq_8pvRKbkZpy75XW-OmAT_vK_D6GtTGyjl8c7l?e0bBrw286wr82sIlz33RA

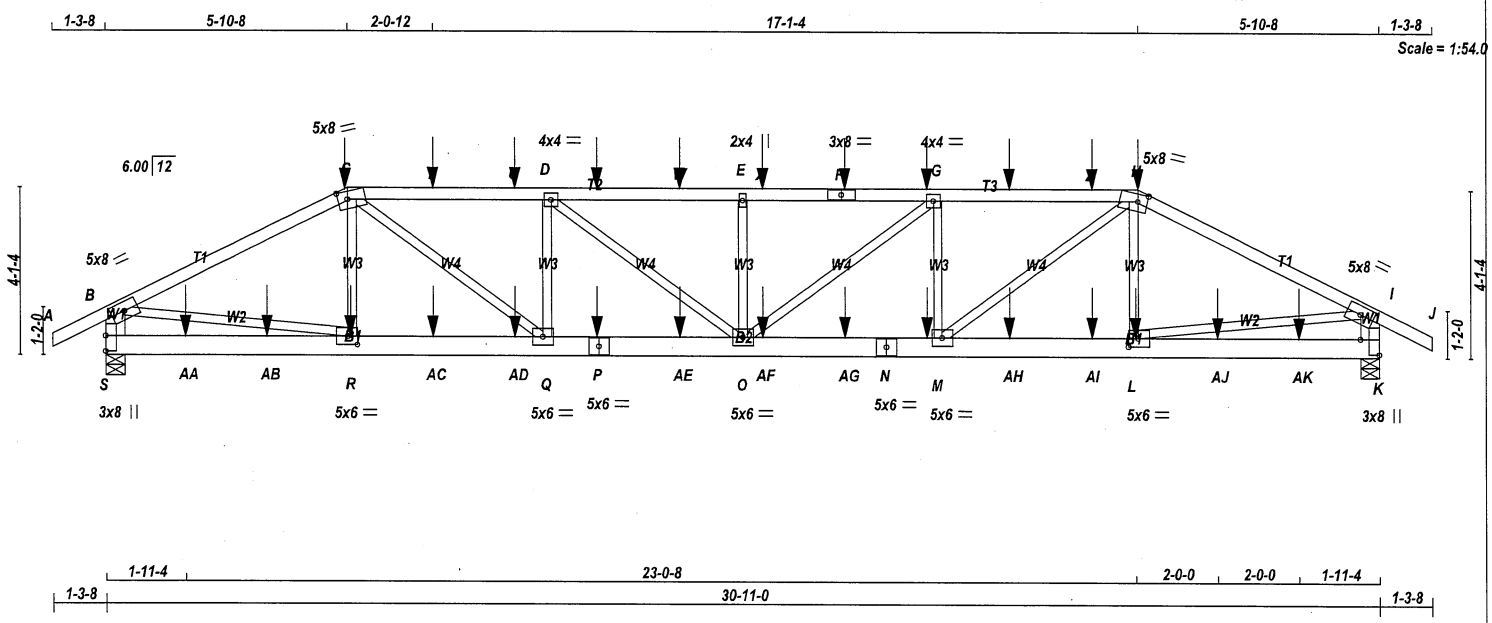

TOTAL WEIGHT = 2 X 139 = 278 lb

LUMBER

N. L. G. A. RULES

CHORDS	SIZE		LUMBER	DESCR.
A - C	2x4	DRY	No.2	SPF
C - F	2x4	DRY	No.2	SPF
F - H	2x4	DRY	No.2	SPF
H - J	2x4	DRY	No.2	SPF
S - B	2x6	DRY	No.2	SPF
K - I	2x6	DRY	No.2	SPF
S - P	2x6	DRY	No.2	SPF
P - N	2x6	DRY	No.2	SPF
N - K	2x6	DRY	No.2	SPF
ALL WEBS EXCEPT	2x3	DRY	No.2	SPF

DRY: SEASONED LUMBER.

DESIGN CONSISTS OF 2 TRUSSES BUILT SEPARATELY THEN FASTENED TOGETHER AS FOLLOWS:

CHORDS	#ROWS	SURFACE SPACING (IN)	LOAD(PLF)
TOP CHORDS : (0.122"X3") SPIRAL NAILS			
A- C	1	12	SIDE(61.0)
C- F	1	12	SIDE(61.0)
F- H	1	12	SIDE(61.0)
H- J	1	12	SIDE(61.0)
S- B	2	12	TOP
K- I	2	12	TOP
BOTTOM CHORDS : (0.122"X3") SPIRAL NAILS			
S- P	2	12	SIDE(183.1)
P- N	2	12	SIDE(0.0)
N- K	2	12	SIDE(183.1)
WEBS : (0.122"X3") SPIRAL NAILS			
2x3	1	6	

NAILS TO BE DRIVEN FROM ONE SIDE ONLY.

GIRDER NAILING ASSUMES NAILED HANGERS ARE FASTENED WITH MIN. 3-0 INCH NAILS.

TOP - COMPONENTS ARE LOADED FROM THE TOP AND MUST BE PLACED ON TOP EDGE OF ALL PLIES FOR THE LOAD TO BE TRANSFERRED TO EACH PLY.

LICENSED PROFESSIONAL ENGINEER
06-24-22
H. J. G. ALVES
100009024
PROVINCE OF ONTARIO

Structural component only
DWG# T-2215294

DIMENSIONS, SUPPORTS AND LOADINGS SPECIFIED BY FABRICATOR TO BE VERIFIED BY BUILDING DESIGNER

BEARINGS

JT	FACTORED GROSS REACTION VERT	HORZ	MAXIMUM FACTORED GROSS REACTION DOWN	HORZ	UPLIFT	INPUT BRG IN-SX	REQRD BRG IN-SX
S	3405	0	3405	0	0	5-8	5-8
K	3453	0	3453	0	0	5-8	5-8

UNFACTORED REACTIONS

JT	1ST LCASE COMBINED	MAX./MIN. COMPONENT REACTIONS SNOW	LIVE	PERM.LIVE	WIND	DEAD	SOIL
S	2388	1683 / 0	0 / 0	0 / 0	0 / 0	705 / 0	0 / 0
K	2421	1706 / 0	0 / 0	0 / 0	0 / 0	715 / 0	0 / 0

BEARING MATERIAL TO BE SPF NO.2 OR BETTER AT JOINT(S) S, K

BRACING

TOP CHORD TO BE SHEATHED OR MAX. PURLIN SPACING = 3.17 FT.
MAX. UNBRACED BOTTOM CHORD LENGTH = 10.00 FT OR RIGID CEILING DIRECTLY APPLIED.

ALL PITCH BREAKS AND PERIMETER CORNER JOINTS MUST BE LATERALLY RESTRAINED.

LOADING

TOTAL LOAD CASES: (4)

CHORDS

MEMB. FR-TO	MAX. FACTORED FORCE (LBS)	FACTORED VERT. LOAD LC1 (PLF) FROM	TO	MAX CSI (LC)	MAX. UNBRAC LENGTH
A- B	0 / 34	-112.4	-112.4	0.08 (1)	10.00
B- C	-5039 / 0	-112.4	-112.4	0.60 (1)	3.77
C- T	-6559 / 0	-112.4	-112.4	0.55 (1)	3.34
T- U	-6559 / 0	-112.4	-112.4	0.55 (1)	3.34
U- D	-6559 / 0	-112.4	-112.4	0.55 (1)	3.34
D- V	-7153 / 0	-112.4	-112.4	0.58 (1)	3.17
V- W	-7153 / 0	-112.4	-112.4	0.58 (1)	3.17
W- E	-7153 / 0	-112.4	-112.4	0.58 (1)	3.17
E- X	-7153 / 0	-112.4	-112.4	0.56 (1)	3.20
X- F	-7153 / 0	-112.4	-112.4	0.56 (1)	3.20
F- G	-7153 / 0	-112.4	-112.4	0.56 (1)	3.20
G- Y	-6603 / 0	-112.4	-112.4	0.53 (1)	3.36
Y- Z	-6603 / 0	-112.4	-112.4	0.53 (1)	3.36
Z- H	-6603 / 0	-112.4	-112.4	0.53 (1)	3.36
H- I	-5122 / 0	-112.4	-112.4	0.61 (1)	3.74
I- J	0 / 34	-112.4	-112.4	0.08 (1)	10.00
S- B	-3325 / 0	0.0	0.0	0.12 (1)	7.63
K- I	-3372 / 0	0.0	0.0	0.12 (1)	7.58
S-AA	0 / 0	-18.5	-18.5	0.07 (4)	10.00
AA-AB	0 / 0	-18.5	-18.5	0.07 (4)	10.00
AB- R	0 / 0	-18.5	-18.5	0.07 (4)	10.00
R-AC	0 / 4493	-18.5	-18.5	0.33 (1)	10.00
AC-AD	0 / 4493	-18.5	-18.5	0.33 (1)	10.00
AD- Q	0 / 4493	-18.5	-18.5	0.33 (1)	10.00
Q- P	0 / 6559	-18.5	-18.5	0.49 (1)	10.00
P-AE	0 / 6559	-18.5	-18.5	0.49 (1)	10.00
AE- O	0 / 6559	-18.5	-18.5	0.49 (1)	10.00
O-AF	0 / 6603	-18.5	-18.5	0.49 (1)	10.00
AF-AG	0 / 6603	-18.5	-18.5	0.49 (1)	10.00
AG- N	0 / 6603	-18.5	-18.5	0.49 (1)	10.00
N- M	0 / 6603	-18.5	-18.5	0.49 (1)	10.00
M-AH	0 / 4568	-18.5	-18.5	0.34 (1)	10.00
AH-AI	0 / 4568	-18.5	-18.5	0.34 (1)	10.00
AI- L	0 / 4568	-18.5	-18.5	0.34 (1)	10.00
L-AJ	0 / 0	-18.5	-18.5	0.07 (4)	10.00
AJ-AK	0 / 0	-18.5	-18.5	0.07 (4)	10.00
AK- K	0 / 0	-18.5	-18.5	0.07 (4)	10.00

WEBS

MEMB. FR-TO	MAX. FACTORED FORCE (LBS)	MAX CSI (LC)
R- C	-404 / 46	0.05 (1)
C- Q	0 / 2605	0.32 (1)
Q- D	-1432 / 0	0.18 (1)
D- O	0 / 756	0.09 (1)
O- E	-781 / 0	0.10 (1)
O- G	0 / 700	0.09 (1)
M- G	-1407 / 0	0.18 (1)
M- H	0 / 2567	0.32 (1)
L- H	-402 / 57	0.05 (1)
B- R	0 / 4542	0.56 (1)
L- I	0 / 4617	0.57 (1)

DESIGN CRITERIA

SPECIFIED LOADS:

TOP CH.	LL	=	32.5	PSF
	DL	=	6.0	PSF
BOT CH.	LL	=	0.0	PSF
	DL	=	7.4	PSF
TOTAL LOAD		=	45.9	PSF

SPACING = 24.0 IN. C/C

LOADING IN FLAT SECTION BASED ON A SLOPE OF 6.00/12

THIS TRUSS IS DESIGNED FOR RESIDENTIAL OR SMALL BUILDING REQUIREMENTS OF PART 9, NBCC 2015

THIS DESIGN COMPLIES WITH:
- PART 9 OF BCBC 2018 , ABC 2019
- PART 9 OF OBC 2012 (2019 AMENDMENT)
- CSA 086-14
- TPIC 2014

(55 % OF 43.9 P.S.F. G.S.L. PLUS 8.4 P.S.F. RAIN LOAD) EQUALS 32.5 P.S.F. SPECIFIED ROOF LIVE LOAD

ALLOWABLE DEFL.(LL)= L/360 (1.03")
CALCULATED VERT. DEFL.(LL) = L/ 999 (0.20")
ALLOWABLE DEFL.(TL)= L/360 (1.03")
CALCULATED VERT. DEFL.(TL) = L/ 999 (0.35")

CSI: TC=0.61/1.00 (H-I:1) , BC=0.49/1.00 (M-O:1) , WB=0.57/1.00 (I-L:1) , SSI=0.23/1.00 (C-D:1)

DOL LUMBER=1.00 NAIL=1.00 LS BEND=1.00 COMP=1.00 SHEAR=1.00 TENS= 1.00

COMPANION LIVE LOAD FACTOR = 1.00

AUTOSOLVE HEELS OFF

TRUSS PLATE MANUFACTURER IS NOT RESPONSIBLE FOR QUALITY CONTROL IN THE TRUSS MANUFACTURING PLANT .

NAIL VALUES

PLATE	GRIP(DRY) (PSI) MAX	MIN	SHEAR (PLI) MAX	MIN	SECTION (PLI) MAX	MIN
MT20	650	371	1747	788	1987	1873

PLATE PLACEMENT TOL. = 0.250 inches

PLATE ROTATION TOL. = 5.0 Deg.

JSI GRIP= 0.87 (L) (INPUT = 0.90)
JSI METAL= 0.61 (P) (INPUT = 1.00)

REVIEWED

CONTINUED ON PAGE 2

JOB NAME	TRUSS NAME	QUANTITY	PLY	JOB DESC.	DRWG NO.
423611	T1	1	2	BAYVIEW WELLINGTON TRUSS DESC.	

PLATES (table is in inches)

JT	TYPE	PLATES	W	LEN	Y	X
B	TMVW-t	MT20	5.0	8.0		
C	TTWW-m	MT20	5.0	8.0	2.25	2.75
D	TMWW-t	MT20	4.0	4.0		
E	TMW+w	MT20	2.0	4.0		
F	TS-t	MT20	3.0	8.0		
G	TMWW-t	MT20	4.0	4.0		
H	TTWW-m	MT20	5.0	8.0	2.25	2.75
I	TMVW-t	MT20	5.0	8.0		
K	BMV1+p	MT20	3.0	8.0	4.50	Edge
L	BMWW-t	MT20	5.0	6.0	2.50	2.75
M	BMWW-t	MT20	5.0	6.0		
N	BS-t	MT20	5.0	6.0		
O	BMWWW-t	MT20	5.0	6.0		
P	BS-t	MT20	5.0	6.0		
Q	BMWW-t	MT20	5.0	6.0		
R	BMWW-t	MT20	5.0	6.0	2.50	2.75
S	BMV1+p	MT20	3.0	8.0	4.50	

Edge - INDICATES REFERENCE CORNER OF PLATE TOUCHES EDGE OF CHORD.

NOTES- (1)
1) Lateral braces to be a minimum of 2X4 SPF #2.

SPECIFIED CONCENTRATED LOADS (LBS)

JT	LOC.	LC1	MAX-	MAX+	FACE	DIR.	TYPE	HEEL	CONN.
C	5-10-8	-308	-308	---	BACK	VERT	TOTAL	---	C1
F	17-11-4	-93	-93	---	BACK	VERT	TOTAL	---	C1
G	19-11-4	-93	-93	---	BACK	VERT	TOTAL	---	C1
H	25-0-8	-308	-308	---	BACK	VERT	TOTAL	---	C1
L	24-11-12	-21	-21	---	BACK	VERT	TOTAL	---	C1
M	19-11-4	-21	-21	---	BACK	VERT	TOTAL	---	C1
P	11-11-4	-21	-21	---	BACK	VERT	TOTAL	---	C1
R	5-11-4	-21	-21	---	BACK	VERT	TOTAL	---	C1
T	7-11-4	-93	-93	---	BACK	VERT	TOTAL	---	C1
U	9-11-4	-93	-93	---	BACK	VERT	TOTAL	---	C1
V	11-11-4	-93	-93	---	BACK	VERT	TOTAL	---	C1
W	13-11-4	-93	-93	---	BACK	VERT	TOTAL	---	C1
X	15-11-4	-93	-93	---	BACK	VERT	TOTAL	---	C1
Y	21-11-4	-93	-93	---	BACK	VERT	TOTAL	---	C1
Z	23-11-4	-93	-93	---	BACK	VERT	TOTAL	---	C1
AA	1-11-4	-20	-20	---	BACK	VERT	TOTAL	---	C1
AB	3-11-4	-21	-21	---	BACK	VERT	TOTAL	---	C1
AC	7-11-4	-21	-21	---	BACK	VERT	TOTAL	---	C1
AD	9-11-4	-21	-21	---	BACK	VERT	TOTAL	---	C1
AE	13-11-4	-21	-21	---	BACK	VERT	TOTAL	---	C1
AF	15-11-4	-21	-21	---	BACK	VERT	TOTAL	---	C1
AG	17-11-4	-21	-21	---	BACK	VERT	TOTAL	---	C1
AH	21-11-4	-21	-21	---	BACK	VERT	TOTAL	---	C1
AI	23-11-4	-21	-21	---	BACK	VERT	TOTAL	---	C1
AJ	26-11-12	-21	-21	---	BACK	VERT	TOTAL	---	C1
AK	28-11-12	-20	-20	---	BACK	VERT	TOTAL	---	C1

CONNECTION REQUIREMENTS

1) **C1:** A SUITABLE HANGER/MECHANICAL CONNECTION IS REQUIRED.

LICENSED PROFESSIONAL ENGINEER
06-24-22
H. J. G. ALVES
100009024
PROVINCE OF ONTARIO

Structural component only
DWG# T-2215294

REVIEWED

JOB NAME	TRUSS NAME	QUANTITY	PLY	JOB DESC.	DRWG NO.
423610	T1S	1	2	BAYVIEW WELLINGTON TRUSS DESC.	

Tamarack Roof Truss, Burlington

Version 8.530 S Feb 23 2022 MiTek Industries, Inc. Fri Jun 24 13:52:19 2022 Page 1
ID:c3jyj23uDijq_8pvRKbkZpy75XW-BoQcO0zcPIg8XqTtgSiYfnS7b5FKb6oQ1Ymgy_z33ag

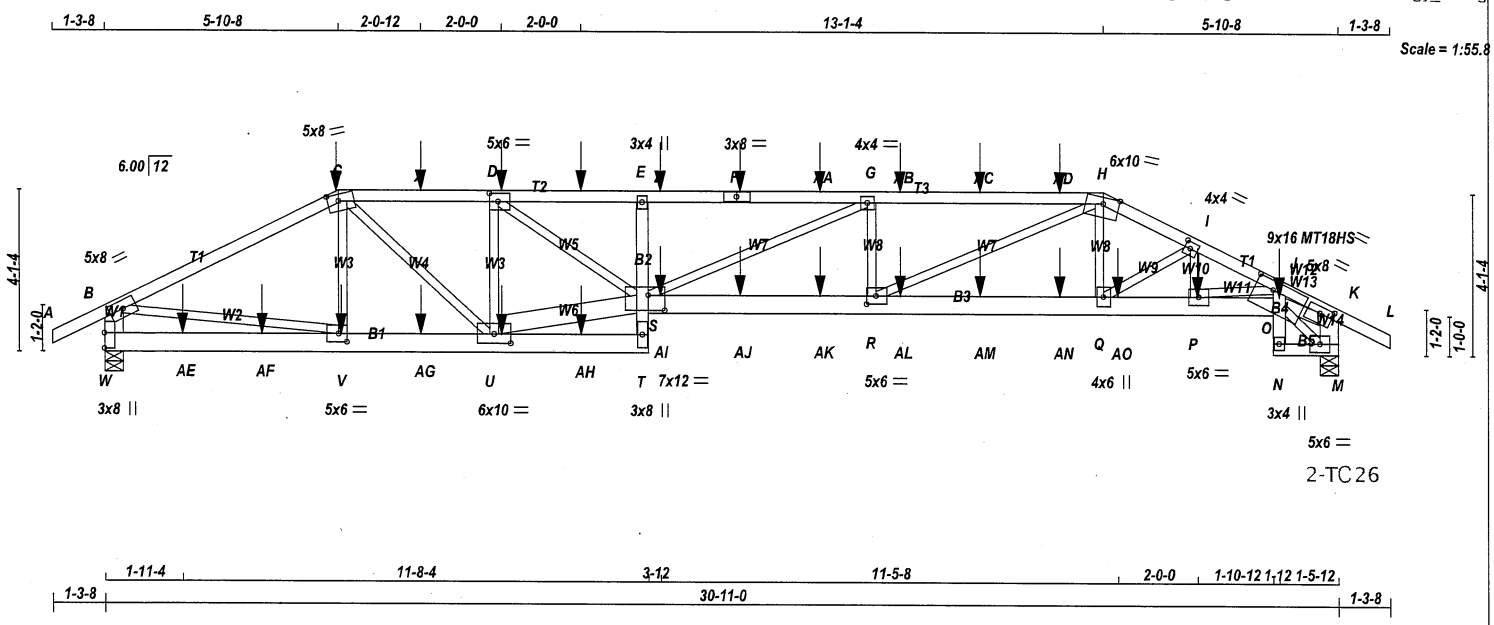

TOTAL WEIGHT = 2 X 147 = 294 lb

LUMBER

N. L. G. A. RULES

CHORDS	SIZE		LUMBER	DESCR.
A - C	2x4	DRY	2100F 1.8E	SPF
C - F	2x4	DRY	2100F 1.8E	SPF
F - H	2x4	DRY	2100F 1.8E	SPF
H - L	2x4	DRY	2100F 1.8E	SPF
W - B	2x6	DRY	No.2	SPF
M - K	2x6	DRY	No.2	SPF
W - T	2x6	DRY	No.2	SPF
T - E	2x4	DRY	No.2	SPF
S - O	2x6	DRY	No.2	SPF
N - J	2x4	DRY	No.2	SPF
N - M	2x4	DRY	No.2	SPF
ALL WEBS EXCEPT	2x3	DRY	No.2	SPF
U - S	2x6	DRY	No.2	SPF
O - K	2x4	DRY	No.2	SPF

DRY: SEASONED LUMBER.

DESIGN CONSISTS OF 2 TRUSSES BUILT SEPARATELY THEN FASTENED TOGETHER AS FOLLOWS:

CHORDS	#ROWS	SURFACE SPACING (IN)	LOAD(PLF)
TOP CHORDS : (0.122"X3") SPIRAL NAILS			
A- C	1	12	SIDE(65.9)
C- F	1	12	SIDE(65.9)
F- H	1	12	SIDE(0.0)
H- L	1	12	TOP
W- B	2	12	TOP
M- K	2	12	TOP
BOTTOM CHORDS : (0.122"X3") SPIRAL NAILS			
W- T	2	12	SIDE(183.1)
S- O	2	12	SIDE(183.1)
T- E	1	12	TOP
J- N	1	12	SIDE(26.3)
N- M	1	12	TOP
WEBS : (0.122"X3") SPIRAL NAILS			
2x3	1	6	
2x4	1	6	
2x6	2	6	

NAILS TO BE DRIVEN FROM ONE SIDE ONLY.

LICENSED PROFESSIONAL ENGINEER
06-24-22
H. J. G. ALVES
100009024
PROVINCE OF ONTARIO

Structural component only
DWG# T-2215271

DIMENSIONS, SUPPORTS AND LOADINGS SPECIFIED BY FABRICATOR TO BE VERIFIED BY BUILDING DESIGNER

BEARINGS

JT	FACTORED GROSS REACTION VERT	HORZ	MAXIMUM FACTORED GROSS REACTION DOWN	HORZ	UPLIFT	INPUT BRG IN-SX	REQRD BRG IN-SX
W	3604	0	3604	0	0	5-8	5-8
M	4212	0	4212	0	0	5-8	5-8

ALLOW FOR 0.3" OF HORIZONTAL MOVEMENT DUE TO TOTAL LOAD

UNFACTORED REACTIONS

JT	1ST LCASE COMBINED	MAX./MIN. COMPONENT REACTIONS SNOW	LIVE	PERM.LIVE	WIND	DEAD	SOIL
W	2527	1783 / 0	0 / 0	0 / 0	0 / 0	744 / 0	0 / 0
M	2948	2107 / 0	0 / 0	0 / 0	0 / 0	841 / 0	0 / 0

BEARING MATERIAL TO BE SPF NO.2 OR BETTER AT JOINT(S) W, M

BRACING

TOP CHORD TO BE SHEATHED OR MAX. PURLIN SPACING = 3.25 FT.
MAX. UNBRACED BOTTOM CHORD LENGTH = 7.81 FT OR RIGID CEILING DIRECTLY APPLIED.

ALL PITCH BREAKS AND PERIMETER CORNER JOINTS MUST BE LATERALLY RESTRAINED.

LOADING

TOTAL LOAD CASES: (4)

CHORDS

MEMB. FR-TO	MAX. FACTORED FORCE (LBS)	FACTORED VERT. LOAD LC1 (PLF) FROM	TO	MAX CSI (LC)	MAX. UNBRAC LENGTH
A- B	0 / 34	-112.4	-112.4	0.05 (1)	10.00
B- C	-5385 / 0	-112.4	-112.4	0.34 (1)	4.76
C- X	-6708 / 0	-112.4	-112.4	0.18 (1)	4.50
X- D	-6708 / 0	-112.4	-112.4	0.18 (1)	4.50
D- Y	-10516 / 0	-112.4	-112.4	0.26 (1)	3.65
Y- E	-10516 / 0	-112.4	-112.4	0.26 (1)	3.65
E- Z	-10613 / 0	-112.4	-112.4	0.57 (1)	3.38
Z- F	-10613 / 0	-112.4	-112.4	0.57 (1)	3.38
F-AA	-10613 / 0	-112.4	-112.4	0.57 (1)	3.38
AA- G	-10613 / 0	-112.4	-112.4	0.57 (1)	3.38
G-AB	-10482 / 0	-112.4	-112.4	0.57 (1)	3.41
AB-AC	-10482 / 0	-112.4	-112.4	0.57 (1)	3.41
AC-AD	-10482 / 0	-112.4	-112.4	0.57 (1)	3.41
AD- H	-10482 / 0	-112.4	-112.4	0.57 (1)	3.41
H- I	-7965 / 0	-112.4	-112.4	0.15 (1)	4.22
I- J	-8860 / 0	-112.4	-112.4	0.50 (1)	3.55
J- K	-10388 / 0	-112.4	-112.4	0.52 (1)	3.25
K- L	0 / 34	-112.4	-112.4	0.05 (1)	10.00
W- B	-3520 / 0	0.0	0.0	0.12 (1)	7.46
M- K	-3640 / 0	0.0	0.0	0.13 (1)	7.37
W-AE	0 / 0	-18.5	-18.5	0.07 (4)	10.00
AE-AF	0 / 0	-18.5	-18.5	0.07 (4)	10.00
AF- V	0 / 0	-18.5	-18.5	0.07 (4)	10.00
V-AG	0 / 4801	-18.5	-18.5	0.33 (1)	10.00
AG- U	0 / 4801	-18.5	-18.5	0.33 (1)	10.00
U-AH	0 / 263	-18.5	-18.5	0.04 (1)	10.00
AH- T	0 / 263	-18.5	-18.5	0.04 (1)	10.00
T- S	0 / 51	0.0	0.0	0.20 (1)	10.00
S- E	-785 / 0	0.0	0.0	0.20 (1)	7.81
S-AI	0 / 10482	-18.5	-18.5	0.81 (1)	10.00
AI-AJ	0 / 10482	-18.5	-18.5	0.81 (1)	10.00
AJ-AK	0 / 10482	-18.5	-18.5	0.81 (1)	10.00
AK- R	0 / 10482	-18.5	-18.5	0.81 (1)	10.00
R-AL	0 / 7144	-18.5	-18.5	0.58 (1)	10.00
AL-AM	0 / 7144	-18.5	-18.5	0.58 (1)	10.00
AM-AN	0 / 7144	-18.5	-18.5	0.58 (1)	10.00
AN- Q	0 / 7144	-18.5	-18.5	0.58 (1)	10.00
Q-AO	0 / 8108	-18.5	-18.5	0.65 (1)	10.00
AO- P	0 / 8108	-18.5	-18.5	0.65 (1)	10.00

WEBS

MEMB. FR-TO	MAX. FACTORED FORCE (LBS)	MAX CSI (LC)
V- C	-477 / 16	0.06 (1)
C- U	0 / 2669	0.33 (1)
U- D	-3456 / 0	0.44 (1)
U- S	0 / 6737	0.44 (1)
D- S	0 / 4632	0.57 (1)
Q- H	0 / 1522	0.19 (1)
B- V	0 / 4854	0.60 (1)
R- G	-1246 / 0	0.12 (1)
S- G	0 / 144	0.02 (1)
R- H	0 / 3686	0.46 (1)
O- M	-915 / 0	0.07 (1)
O- K	0 / 9209	0.81 (1)
P- I	0 / 385	0.05 (1)
Q- I	-1224 / 0	0.12 (1)
P- J	-2832 / 0	0.24 (1)

DESIGN CRITERIA

SPECIFIED LOADS:

TOP CH.	LL	=	32.5	PSF
	DL	=	6.0	PSF
BOT CH.	LL	=	0.0	PSF
	DL	=	7.4	PSF
TOTAL LOAD		=	45.9	PSF

SPACING = 24.0 IN. C/C

LOADING IN FLAT SECTION BASED ON A SLOPE OF 6.00/12

THIS TRUSS IS DESIGNED FOR RESIDENTIAL OR SMALL BUILDING REQUIREMENTS OF PART 9, NBCC 2015

THIS DESIGN COMPLIES WITH:
- PART 9 OF BCBC 2018 , ABC 2019
- PART 9 OF OBC 2012 (2019 AMENDMENT)
- CSA 086-14
- TPIC 2014

DESIGN ASSUMPTIONS
-OVERHANG NOT TO BE ALTERED OR CUT OFF.

(55 % OF 43.9 P.S.F. G.S.L. PLUS 8.4 P.S.F. RAIN LOAD) EQUALS 32.5 P.S.F. SPECIFIED ROOF LIVE LOAD

ALLOWABLE DEFL.(LL)= L/360 (1.03")
CALCULATED VERT. DEFL.(LL) = L/ 999 (0.33")
ALLOWABLE DEFL.(TL)= L/360 (1.03")
CALCULATED VERT. DEFL.(TL) = L/ 646 (0.57")

CSI: TC=0.57/1.00 (E-G:1) , BC=0.83/1.00 (O-P:1) , WB=0.81/1.00 (K-O:1) , SSI=0.78/1.00 (J-O:1)

DOL LUMBER=1.00 NAIL=1.00 LS BEND=1.00 COMP=1.00 SHEAR=1.00 TENS= 1.00

COMPANION LIVE LOAD FACTOR = 1.00

AUTOSOLVE HEELS OFF

TRUSS PLATE MANUFACTURER IS NOT RESPONSIBLE FOR QUALITY CONTROL IN THE TRUSS MANUFACTURING PLANT .

NAIL VALUES

PLATE	GRIP(DRY) (PSI) MAX	MIN	SHEAR (PLI) MAX	MIN	SECTION (PLI) MAX	MIN
MT20	650	371	1747	788	1987	1873
MT18HS	586	403	2455	1382	3163	3004

PLATE PLACEMENT TOL. = 0.250 inches

PLATE ROTATION TOL. = 5.0 Deg.

JSI GRIP= 0.89 (D) (INPUT = 0.90)
JSI METAL= 0.94 (K) (INPUT = 1.00)

REVIEWED

CONTINUED ON PAGE 2

GIRDER NAILING ASSUMES NAILED HANGERS ARE FASTENED WITH MIN. 3-0 INCH NAILS.

PLATES (table is in inches)

JT	TYPE	PLATES	W	LEN	Y	X
B	TMVW-t	MT20	5.0	8.0		
C	TTWW-m	MT20	5.0	8.0	2.00	3.25
D	TMWW-t	MT20	5.0	6.0	2.50	2.50
E	TMV+p	MT20	3.0	4.0		
F	TS-t	MT20	3.0	8.0		
G	TMWW-t	MT20	4.0	4.0		
H	TTWW-m	MT20	6.0	10.0	2.00	4.75
I	TMWW-t	MT20	4.0	4.0	2.00	1.75
J						
J	TMBVWWW*-t	MT18HS	9.0	16.0	2.75	5.50
K	TMVW-t	MT20	5.0	8.0	2.00	4.00
M	BMVW1-t	MT20	5.0	6.0		
N	BMV+p	MT20	3.0	4.0		
O						
P	BMWW-t	MT20	5.0	6.0		
Q	BMWW+t	MT20	4.0	6.0		
R	BMWW-t	MT20	5.0	6.0	2.50	2.75
S	BVMWWW-t	MT20	7.0	12.0	4.50	5.00
T	BMV+p	MT20	3.0	8.0		
U	BMWWW-t	MT20	6.0	10.0	2.75	5.00
V	BMWW-t	MT20	5.0	6.0	2.50	2.50
W	BMV1+p	MT20	3.0	8.0	4.50	

NOTES- (1)
1) Lateral braces to be a minimum of 2X4 SPF #2.

LOADING
TOTAL LOAD CASES: (4)

CHORDS

MEMB. FR-TO	MAX. FACTORED FORCE (LBS)	FACTORED VERT. LOAD (PLF) FROM	TO	LC1 MAX CSI (LC)	MAX. UNBRAC LENGTH
P- O	0 / 10868	-18.5	-18.5	0.83 (1)	10.00
N- O	0 / 15	0.0	0.0	0.62 (1)	10.00
O- J	0 / 2012	0.0	0.0	0.80 (1)	10.00
N- M	0 / 724	-18.5	-18.5	0.07 (1)	10.00

WEBS

MEMB. FR-TO	MAX. FACTORED FORCE (LBS)	MAX CSI (LC)

SPECIFIED CONCENTRATED LOADS (LBS)

JT	LOC.	LC1	MAX-	MAX+	FACE	DIR.	TYPE	HEEL	CONN.
C	5-10-8	-308	-308	---	BACK	VERT	TOTAL	---	C1
D	9-11-4	-93	-93	---	BACK	VERT	TOTAL	---	C1
F	15-11-4	-92	-92	---	BACK	VERT	TOTAL	---	C1
O	29-5-4	-235	-235	---	BACK	VERT	TOTAL	---	C1
P	27-4-12	-243	-243	---	BACK	VERT	TOTAL	---	C1
U	9-11-4	-21	-21	---	BACK	VERT	TOTAL	---	C1
V	5-11-4	-21	-21	---	BACK	VERT	TOTAL	---	C1
X	7-11-4	-93	-93	---	BACK	VERT	TOTAL	---	C1
Y	11-11-4	-93	-93	---	BACK	VERT	TOTAL	---	C1
Z	13-11-4	-92	-92	---	BACK	VERT	TOTAL	---	C1
AA	17-11-4	-92	-92	---	BACK	VERT	TOTAL	---	C1
AB	19-11-4	-92	-92	---	BACK	VERT	TOTAL	---	C1
AC	21-11-4	-92	-92	---	BACK	VERT	TOTAL	---	C1
AD	23-11-4	-92	-92	---	BACK	VERT	TOTAL	---	C1
AE	1-11-4	-20	-20	---	BACK	VERT	TOTAL	---	C1
AF	3-11-4	-21	-21	---	BACK	VERT	TOTAL	---	C1
AG	7-11-4	-21	-21	---	BACK	VERT	TOTAL	---	C1
AH	11-11-4	-21	-21	---	BACK	VERT	TOTAL	---	C1
AI	13-11-4	-78	-78	---	BACK	VERT	TOTAL	---	C1
AJ	15-11-4	-74	-74	---	BACK	VERT	TOTAL	---	C1
AK	17-11-4	-74	-74	---	BACK	VERT	TOTAL	---	C1
AL	19-11-4	-74	-74	---	BACK	VERT	TOTAL	---	C1
AM	21-11-4	-74	-74	---	BACK	VERT	TOTAL	---	C1
AN	23-11-4	-74	-74	---	BACK	VERT	TOTAL	---	C1
AO	25-4-12	-243	-243	---	BACK	VERT	TOTAL	---	C1

CONNECTION REQUIREMENTS

1) **C1:** A SUITABLE HANGER/MECHANICAL CONNECTION IS REQUIRED.

LICENSED PROFESSIONAL ENGINEER
06-24-22
H. J. G. ALVES
100009024
PROVINCE OF ONTARIO

Structural component only
DWG# T-2215271

REVIEWED

JOB NAME	TRUSS NAME	QUANTITY	PLY	JOB DESC.	DRWG NO.
423611	T2	1	1	BAYVIEW WELLINGTON TRUSS DESC.	

Tamarack Roof Truss, Burlington

Version 8.530 S Feb 23 2022 MiTek Industries, Inc. Fri Jun 24 14:02:28 2022 Page 1
ID:c3jyj23uDijq_8pvRKbkZpy75XW-syjrCFLd_QOk5QXwss8MrCADWaAznaA34ooPrBz33R9

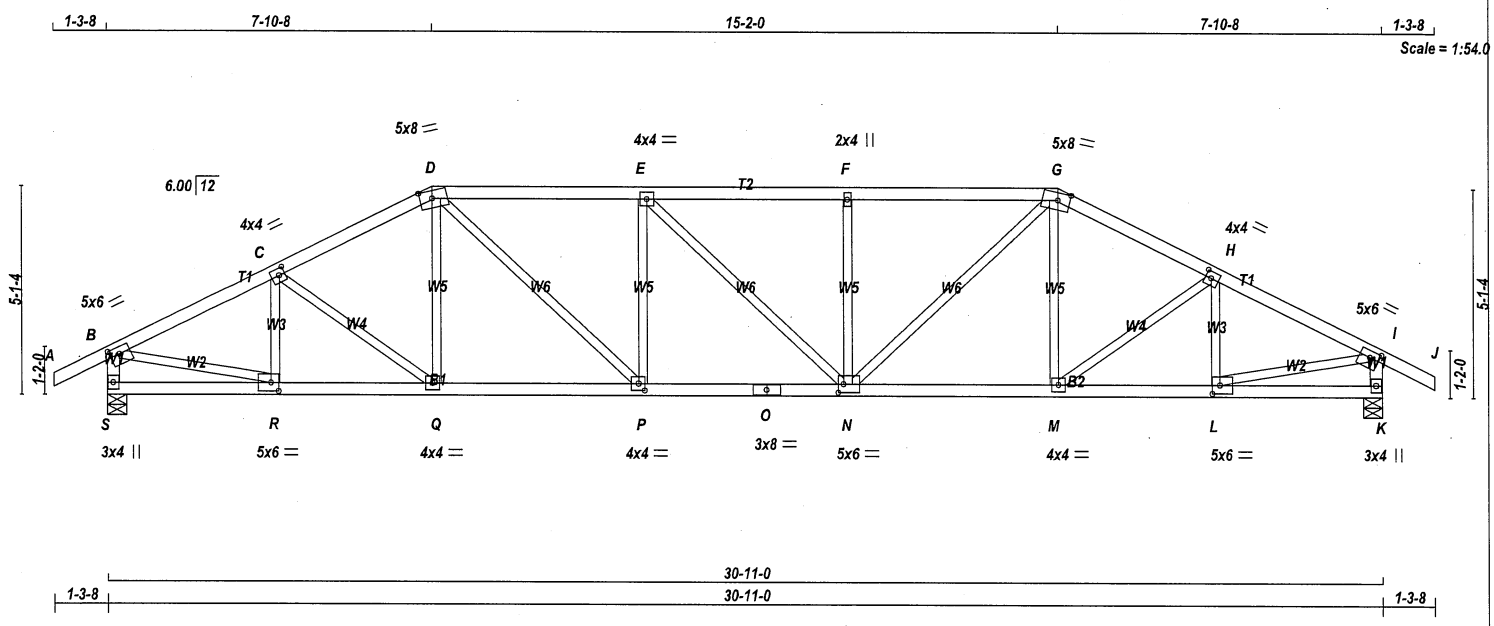

TOTAL WEIGHT = 126 lb

LUMBER
N. L. G. A. RULES

CHORDS	SIZE		LUMBER	DESCR.
A - D	2x4	DRY	No.2	SPF
D - G	2x4	DRY	No.2	SPF
G - J	2x4	DRY	No.2	SPF
S - B	2x4	DRY	No.2	SPF
K - I	2x4	DRY	No.2	SPF
S - O	2x4	DRY	No.2	SPF
O - K	2x4	DRY	No.2	SPF
ALL WEBS EXCEPT	2x3	DRY	No.2	SPF

DRY: SEASONED LUMBER.

PLATES (table is in inches)

JT	TYPE	PLATES	W	LEN	Y	X
B	TMVW-t	MT20	5.0	6.0	2.00	2.75
C	TMWW-t	MT20	4.0	4.0	2.00	1.75
D	TTWW-m	MT20	5.0	8.0	2.25	3.50
E	TMWW-t	MT20	4.0	4.0		
F	TMW+w	MT20	2.0	4.0		
G	TTWW-m	MT20	5.0	8.0	2.25	3.50
H	TMWW-t	MT20	4.0	4.0	2.00	1.75
I	TMVW-t	MT20	5.0	6.0	2.00	2.75
K	BMV1+p	MT20	3.0	4.0		
L	BMWW-t	MT20	5.0	6.0	2.50	2.25
M	BMWW-t	MT20	4.0	4.0		
N	BMWWW-t	MT20	5.0	6.0	2.50	1.50
O	BS-t	MT20	3.0	8.0		
P	BMWW-t	MT20	4.0	4.0	2.00	1.75
Q	BMWW-t	MT20	4.0	4.0		
R	BMWW-t	MT20	5.0	6.0	2.50	2.25
S	BMV1+p	MT20	3.0	4.0		

NOTES- (1)
1) Lateral braces to be a minimum of 2X4 SPF #2.

DIMENSIONS, SUPPORTS AND LOADINGS SPECIFIED BY FABRICATOR TO BE VERIFIED BY BUILDING DESIGNER

BEARINGS

JT	FACTORED GROSS REACTION VERT	HORZ	MAXIMUM FACTORED GROSS REACTION DOWN	HORZ	UPLIFT	INPUT BRG IN-SX	REQRD BRG IN-SX
S	2177	0	2177	0	0	5-8	5-8
K	2177	0	2177	0	0	5-8	5-8

UNFACTORED REACTIONS

JT	1ST LCASE COMBINED	MAX./MIN. COMPONENT REACTIONS SNOW	LIVE	PERM.LIVE	WIND	DEAD	SOIL
S	1523	1092 / 0	0 / 0	0 / 0	0 / 0	431 / 0	0 / 0
K	1523	1092 / 0	0 / 0	0 / 0	0 / 0	431 / 0	0 / 0

BEARING MATERIAL TO BE SPF NO.2 OR BETTER AT JOINT(S) S, K

BRACING
TOP CHORD TO BE SHEATHED OR MAX. PURLIN SPACING = 3.49 FT.
MAX. UNBRACED BOTTOM CHORD LENGTH = 10.00 FT OR RIGID CEILING DIRECTLY APPLIED.

ALL PITCH BREAKS AND PERIMETER CORNER JOINTS MUST BE LATERALLY RESTRAINED.

LOADING
TOTAL LOAD CASES: (4)

CHORDS

MEMB. FR-TO	MAX. FACTORED FORCE (LBS)	FACTORED VERT. LOAD (PLF) FROM	TO	LC1	MAX CSI (LC)	MAX. UNBRAC LENGTH
A- B	0 / 34	-112.4	-112.4	0.15 (1)	10.00	
B- C	-2810 / 0	-112.4	-112.4	0.30 (1)	3.91	
C- D	-2795 / 0	-112.4	-112.4	0.29 (1)	3.92	
D- E	-3227 / 0	-112.4	-112.4	0.47 (1)	3.49	
E- F	-3226 / 0	-112.4	-112.4	0.43 (1)	3.54	
F- G	-3225 / 0	-112.4	-112.4	0.47 (1)	3.49	
G- H	-2795 / 0	-112.4	-112.4	0.29 (1)	3.92	
H- I	-2810 / 0	-112.4	-112.4	0.30 (1)	3.91	
I- J	0 / 34	-112.4	-112.4	0.15 (1)	10.00	
S- B	-2137 / 0	0.0	0.0	0.22 (1)	5.80	
K- I	-2137 / 0	0.0	0.0	0.22 (1)	5.80	
S- R	0 / 0	-18.5	-18.5	0.07 (4)	10.00	
R- Q	0 / 2531	-18.5	-18.5	0.45 (1)	10.00	
Q- P	0 / 2481	-18.5	-18.5	0.45 (1)	10.00	
P- O	0 / 3228	-18.5	-18.5	0.57 (1)	10.00	
O- N	0 / 3228	-18.5	-18.5	0.57 (1)	10.00	
N- M	0 / 2481	-18.5	-18.5	0.45 (1)	10.00	
M- L	0 / 2531	-18.5	-18.5	0.46 (1)	10.00	
L- K	0 / 0	-18.5	-18.5	0.07 (4)	10.00	

WEBS

MEMB. FR-TO	MAX. FACTORED FORCE (LBS)	MAX CSI (LC)
R- C	-476 / 0	0.09 (1)
C- Q	-66 / 0	0.03 (1)
Q- D	0 / 134	0.03 (4)
D- P	0 / 1026	0.23 (1)
P- E	-613 / 0	0.24 (1)
E- N	-3 / 0	0.00 (1)
N- F	-612 / 0	0.24 (1)
N- G	0 / 1023	0.23 (1)
M- G	0 / 136	0.04 (4)
M- H	-65 / 0	0.03 (1)
L- H	-477 / 0	0.09 (1)
B- R	0 / 2588	0.58 (1)
L- I	0 / 2588	0.58 (1)

DESIGN CRITERIA

SPECIFIED LOADS:

TOP CH.	LL	=	32.5	PSF
	DL	=	6.0	PSF
BOT CH.	LL	=	0.0	PSF
	DL	=	7.4	PSF
TOTAL LOAD		=	45.9	PSF

SPACING = 24.0 IN. C/C

LOADING IN FLAT SECTION BASED ON A SLOPE OF 6.00/12

THIS TRUSS IS DESIGNED FOR RESIDENTIAL OR SMALL BUILDING REQUIREMENTS OF PART 9, NBCC 2015

THIS DESIGN COMPLIES WITH:
- PART 9 OF BCBC 2018 , ABC 2019
- PART 9 OF OBC 2012 (2019 AMENDMENT)
- CSA 086-14
- TPIC 2014

(55 % OF 43.9 P.S.F. G.S.L. PLUS 8.4 P.S.F. RAIN LOAD) EQUALS 32.5 P.S.F. SPECIFIED ROOF LIVE LOAD

ALLOWABLE DEFL.(LL)= L/360 (1.03")
CALCULATED VERT. DEFL.(LL) = L/ 999 (0.17")
ALLOWABLE DEFL.(TL)= L/360 (1.03")
CALCULATED VERT. DEFL.(TL) = L/ 999 (0.31")

CSI: TC=0.47/1.00 (F-G:1) , BC=0.57/1.00 (N-P:1) , WB=0.58/1.00 (B-R:1) , SSI=0.26/1.00 (D-E:1)

DOL LUMBER=1.00 NAIL=1.00 LS BEND=1.10 COMP=1.10 SHEAR=1.10 TENS= 1.10

COMPANION LIVE LOAD FACTOR = 1.00

TRUSS PLATE MANUFACTURER IS NOT RESPONSIBLE FOR QUALITY CONTROL IN THE TRUSS MANUFACTURING PLANT .

NAIL VALUES

PLATE	GRIP(DRY) (PSI) MAX	MIN	SHEAR (PLI) MAX	MIN	SECTION (PLI) MAX	MIN
MT20	650	371	1747	788	1987	1873

PLATE PLACEMENT TOL. = 0.250 inches

PLATE ROTATION TOL. = 5.0 Deg.

JSI GRIP= 0.90 (B) (INPUT = 0.90)
JSI METAL= 0.99 (O) (INPUT = 1.00)

LICENSED PROFESSIONAL ENGINEER
06-24-22
H. J. G. ALVES
100009024
PROVINCE OF ONTARIO

Structural component only
DWG# T-2215295

REVIEWED

JOB NAME	TRUSS NAME	QUANTITY	PLY	JOB DESC.	DRWG NO.
423610	T2S	1	1	BAYVIEW WELLINGTON TRUSS DESC.	

Tamarack Roof Truss, Burlington

Version 8.530 S Feb 23 2022 MiTek Industries, Inc. Fri Jun 24 13:52:20 2022 Page 1
ID:c3jyj23uDijq_8pvRKbkZpy75XW-f___bL_EAco?9_23E9DnC??GjVcYKZ0ZGCWEURz33af

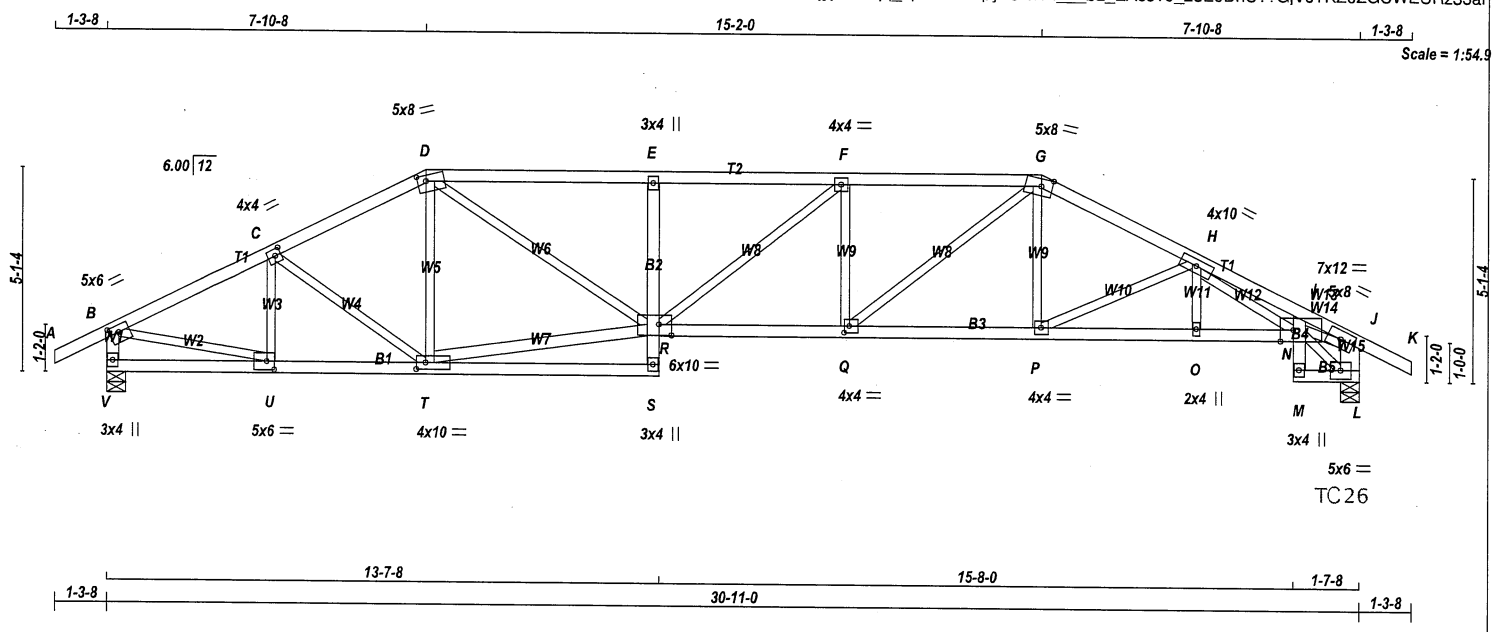

TOTAL WEIGHT = 133 lb
[M][F]

LUMBER
N. L. G. A. RULES

CHORDS	SIZE		LUMBER	DESCR.
A - D	2x4	DRY	No.2	SPF
D - G	2x4	DRY	No.2	SPF
G - K	2x4	DRY	No.2	SPF
V - B	2x4	DRY	No.2	SPF
L - J	2x6	DRY	No.2	SPF
V - S	2x4	DRY	No.2	SPF
S - E	2x4	DRY	No.2	SPF
R - N	2x4	DRY	No.2	SPF
M - I	2x4	DRY	No.2	SPF
M - L	2x4	DRY	No.2	SPF
ALL WEBS EXCEPT	2x3	DRY	No.2	SPF
T - R	2x4	DRY	No.2	SPF

DRY: SEASONED LUMBER.

PLATES (table is in inches)

JT	TYPE	PLATES	W	LEN	Y	X
B	TMVW-t	MT20	5.0	6.0	2.00	2.75
C	TMWW-t	MT20	4.0	4.0	2.00	1.75
D	TTWW-m	MT20	5.0	8.0	1.75	2.50
E	TMV+p	MT20	3.0	4.0		
F	TMWW-t	MT20	4.0	4.0		
G	TTWW-m	MT20	5.0	8.0	2.25	3.25
H	TMWWW-t	MT20	4.0	10.0		
I						
I	TMBVWWW*-I	MT20	7.0	12.0	Edge	3.75
J	TMVW-t	MT20	5.0	8.0		
L	BMVW1-t	MT20	5.0	6.0		
M	BMV+p	MT20	3.0	4.0		
N						
O	BMW+w	MT20	2.0	4.0		
P	BMWW-t	MT20	4.0	4.0		
Q	BMWW-t	MT20	4.0	4.0	2.00	1.50
R	BVMWWW-I	MT20	6.0	10.0	3.25	3.75
S	BMV+p	MT20	3.0	4.0		
T	BMWWW-t	MT20	4.0	10.0	2.00	2.75
U	BMWW-t	MT20	5.0	6.0	2.50	2.25
V	BMV1+p	MT20	3.0	4.0		

DIMENSIONS, SUPPORTS AND LOADINGS SPECIFIED BY FABRICATOR TO BE VERIFIED BY BUILDING DESIGNER

BEARINGS

JT	FACTORED GROSS REACTION VERT	HORZ	MAXIMUM FACTORED GROSS REACTION DOWN	HORZ	UPLIFT	INPUT BRG IN-SX	REQRD BRG IN-SX
V	2173	0	2173	0	0	5-8	5-8
L	2180	0	2180	0	0	5-8	5-8

ALLOW FOR 0.3" OF HORIZONTAL MOVEMENT DUE TO TOTAL LOAD

UNFACTORED REACTIONS

JT	1ST LCASE COMBINED	MAX./MIN. COMPONENT REACTIONS SNOW	LIVE	PERM.LIVE	WIND	DEAD	SOIL
V	1520	1090 / 0	0 / 0	0 / 0	0 / 0	430 / 0	0 / 0
L	1525	1094 / 0	0 / 0	0 / 0	0 / 0	431 / 0	0 / 0

BEARING MATERIAL TO BE SPF NO.2 OR BETTER AT JOINT(S) V, L

BRACING
TOP CHORD TO BE SHEATHED OR MAX. PURLIN SPACING = 2.84 FT.
MAX. UNBRACED BOTTOM CHORD LENGTH = 7.81 FT OR RIGID CEILING DIRECTLY APPLIED.

ALL PITCH BREAKS AND PERIMETER CORNER JOINTS MUST BE LATERALLY RESTRAINED.

LOADING
TOTAL LOAD CASES: (4)

CHORDS

MEMB. FR-TO	MAX. FACTORED FORCE (LBS)	FACTORED VERT. LOAD LC1 (PLF) FROM	TO	MAX CSI (LC)	MAX. UNBRAC LENGTH
A- B	0 / 34	-112.4	-112.4	0.15 (1)	10.00
B- C	-2803 / 0	-112.4	-112.4	0.30 (1)	3.91
C- D	-2796 / 0	-112.4	-112.4	0.29 (1)	3.92
D- E	-4073 / 0	-112.4	-112.4	0.68 (1)	2.91
E- F	-4102 / 0	-112.4	-112.4	0.54 (1)	3.04
F- G	-4017 / 0	-112.4	-112.4	0.52 (1)	3.11
G- H	-3490 / 0	-112.4	-112.4	0.33 (1)	3.52
H- I	-4594 / 0	-112.4	-112.4	0.52 (1)	2.84
I- J	-4149 / 0	-112.4	-112.4	0.45 (1)	3.07
J- K	0 / 34	-112.4	-112.4	0.15 (1)	10.00
V- B	-2132 / 0	0.0	0.0	0.22 (1)	5.81
L- J	-1946 / 0	0.0	0.0	0.13 (1)	7.22
V- U	0 / 0	-18.5	-18.5	0.07 (4)	10.00
U- T	0 / 2525	-18.5	-18.5	0.48 (1)	10.00
T- S	0 / 112	-18.5	-18.5	0.13 (4)	10.00
S- R	0 / 47	0.0	0.0	0.16 (1)	10.00
R- E	-645 / 0	0.0	0.0	0.17 (1)	7.81
R- Q	0 / 4017	-18.5	-18.5	0.71 (1)	10.00
Q- P	0 / 3113	-18.5	-18.5	0.55 (1)	10.00
P- O	0 / 3812	-18.5	-18.5	0.67 (1)	10.00
O- N	0 / 3812	-18.5	-18.5	0.66 (1)	10.00
M- N	0 / 15	0.0	0.0	0.45 (1)	10.00
N- I	-24 / 7	0.0	0.0	0.34 (1)	7.81
M- L	0 / 325	-18.5	-18.5	0.06 (1)	10.00

WEBS

MEMB. FR-TO	MAX. FACTORED FORCE (LBS)	MAX CSI (LC)
U- C	-485 / 0	0.09 (1)
C- T	-58 / 0	0.02 (1)
T- D	-273 / 0	0.10 (1)
T- R	0 / 2404	0.39 (1)
D- R	0 / 1927	0.43 (1)
R- F	0 / 109	0.02 (1)
Q- F	-627 / 0	0.16 (1)
Q- G	0 / 1151	0.26 (1)
P- G	0 / 440	0.10 (1)
P- H	-787 / 0	0.25 (1)
O- H	0 / 63	0.02 (4)
B- U	0 / 2581	0.58 (1)
N- L	-393 / 0	0.06 (1)
N- J	0 / 3625	0.82 (1)
H- N	0 / 450	0.10 (1)

DESIGN CRITERIA

SPECIFIED LOADS:

TOP CH.	LL	=	32.5	PSF
	DL	=	6.0	PSF
BOT CH.	LL	=	0.0	PSF
	DL	=	7.4	PSF
TOTAL LOAD		=	45.9	PSF

SPACING = 24.0 IN. C/C

LOADING IN FLAT SECTION BASED ON A SLOPE OF 6.00/12

THIS TRUSS IS DESIGNED FOR RESIDENTIAL OR SMALL BUILDING REQUIREMENTS OF PART 9, NBCC 2015

THIS DESIGN COMPLIES WITH:
- PART 9 OF BCBC 2018 , ABC 2019
- PART 9 OF OBC 2012 (2019 AMENDMENT)
- CSA 086-14
- TPIC 2014

DESIGN ASSUMPTIONS
-OVERHANG NOT TO BE ALTERED OR CUT OFF.

(55 % OF 43.9 P.S.F. G.S.L. PLUS 8.4 P.S.F. RAIN LOAD) EQUALS 32.5 P.S.F. SPECIFIED ROOF LIVE LOAD

ALLOWABLE DEFL.(LL)= L/360 (1.03")
CALCULATED VERT. DEFL.(LL) = L/ 999 (0.27")
ALLOWABLE DEFL.(TL)= L/360 (1.03")
CALCULATED VERT. DEFL.(TL) = L/ 781 (0.47")

CSI: TC=0.68/1.00 (D-E:1) , BC=0.71/1.00 (Q-R:1) , WB=0.82/1.00 (J-N:1) , SSI=0.45/1.00 (I-N:1)

DOL LUMBER=1.00 NAIL=1.00 LS BEND=1.10 COMP=1.10 SHEAR=1.10 TENS= 1.10

COMPANION LIVE LOAD FACTOR = 1.00

AUTOSOLVE LEFT HEEL ONLY

TRUSS PLATE MANUFACTURER IS NOT RESPONSIBLE FOR QUALITY CONTROL IN THE TRUSS MANUFACTURING PLANT .

NAIL VALUES

PLATE	GRIP(DRY) (PSI) MAX	MIN	SHEAR (PLI) MAX	MIN	SECTION (PLI) MAX	MIN
MT20	650	371	1747	788	1987	1873

PLATE PLACEMENT TOL. = 0.250 inches

PLATE ROTATION TOL. = 5.0 Deg.

JSI GRIP= 0.90 (T) (INPUT = 0.90)
JSI METAL= 0.76 (J) (INPUT = 1.00)

LICENSED PROFESSIONAL ENGINEER
06-24-22
H. J. G. ALVES
100009024
PROVINCE OF ONTARIO

Structural component only
DWG# T-2215272

REVIEWED

CONTINUED ON PAGE 2

JOB NAME	TRUSS NAME	QUANTITY	PLY	JOB DESC. BAYVIEW WELLINGTON	DRWG NO.
423610	T2S	1	1	TRUSS DESC.	

Tamarack Roof Truss, Burlington

Version 8.530 S Feb 23 2022 MiTek Industries, Inc. Fri Jun 24 13:52:20 2022 Page 2
ID:c3jyj23uDijq_8pvRKbkZpy75XW-f_bL_EAco?9_23E9DnC??GjVcYKZ0ZGCWEURz33af

Edge - INDICATES REFERENCE CORNER OF PLATE TOUCHES EDGE OF CHORD.

NOTES- (1)
1) Lateral braces to be a minimum of 2X4 SPF #2.

LICENSED PROFESSIONAL ENGINEER
06-24-22
H. J. G. ALVES
100009024
PROVINCE OF ONTARIO

Structural component only
DWG# T-2215272

REVIEWED

JOB NAME	TRUSS NAME	QUANTITY	PLY	JOB DESC.	DRWG NO.
423611	T3	1	1	BAYVIEW WELLINGTON TRUSS DESC.	

Tamarack Roof Truss, Burlington

Version 8.530 S Feb 23 2022 MiTek Industries, Inc. Fri Jun 24 14:02:29 2022 Page 1
ID:c3jyj23uDijq_8pvRKbkZpy75XW-K8HDPbMFIjWbja66PZfbNQjNt_XXW1ACJSXyNez33R8

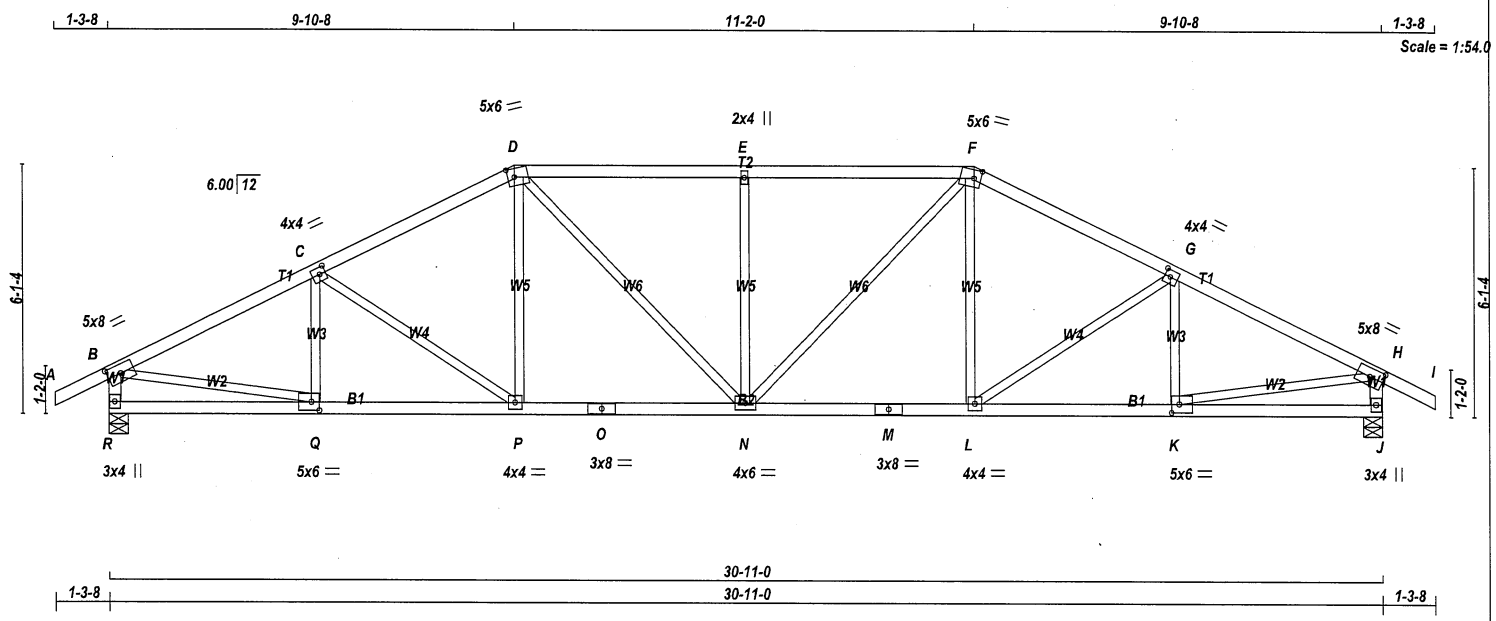

TOTAL WEIGHT = 126 lb

[M][F]

LUMBER

N. L. G. A. RULES

CHORDS	SIZE		LUMBER	DESCR.
A - D	2x4	DRY	No.2	SPF
D - F	2x4	DRY	No.2	SPF
F - I	2x4	DRY	No.2	SPF
R - B	2x4	DRY	No.2	SPF
J - H	2x4	DRY	No.2	SPF
R - O	2x4	DRY	No.2	SPF
O - M	2x4	DRY	No.2	SPF
M - J	2x4	DRY	No.2	SPF
ALL WEBS EXCEPT	2x3	DRY	No.2	SPF

DRY: SEASONED LUMBER.

PLATES (table is in inches)

JT	TYPE	PLATES	W	LEN	Y	X
B	TMVW-t	MT20	5.0	8.0	2.50	4.00
C	TMWW-t	MT20	4.0	4.0	2.00	1.75
D	TTWW-m	MT20	5.0	6.0	2.50	2.00
E	TMW+w	MT20	2.0	4.0		
F	TTWW-m	MT20	5.0	6.0	2.50	2.00
G	TMWW-t	MT20	4.0	4.0	2.00	1.75
H	TMVW-t	MT20	5.0	8.0	2.50	4.00
J	BMV1+p	MT20	3.0	4.0		
K	BMWW-t	MT20	5.0	6.0	2.50	2.25
L	BMWW-t	MT20	4.0	4.0		
M	BS-t	MT20	3.0	8.0		
N	BMWWW-t	MT20	4.0	6.0		
O	BS-t	MT20	3.0	8.0		
P	BMWW-t	MT20	4.0	4.0		
Q	BMWW-t	MT20	5.0	6.0	2.50	2.25
R	BMV1+p	MT20	3.0	4.0		

NOTES- (1)
1) Lateral braces to be a minimum of 2X4 SPF #2.

DIMENSIONS, SUPPORTS AND LOADINGS SPECIFIED BY FABRICATOR TO BE VERIFIED BY BUILDING DESIGNER

BEARINGS

JT	FACTORED GROSS REACTION VERT	HORZ	MAXIMUM FACTORED GROSS REACTION DOWN	HORZ	UPLIFT	INPUT BRG IN-SX	REQRD BRG IN-SX
R	2177	0	2177	0	0	5-8	5-8
J	2177	0	2177	0	0	5-8	5-8

UNFACTORED REACTIONS

JT	1ST LCASE COMBINED	MAX./MIN. COMPONENT REACTIONS SNOW	LIVE	PERM.LIVE	WIND	DEAD	SOIL
R	1523	1092 / 0	0 / 0	0 / 0	0 / 0	431 / 0	0 / 0
J	1523	1092 / 0	0 / 0	0 / 0	0 / 0	431 / 0	0 / 0

BEARING MATERIAL TO BE SPF NO.2 OR BETTER AT JOINT(S) R, J

BRACING

TOP CHORD TO BE SHEATHED OR MAX. PURLIN SPACING = 3.60 FT.
MAX. UNBRACED BOTTOM CHORD LENGTH = 10.00 FT OR RIGID CEILING DIRECTLY APPLIED.

ALL PITCH BREAKS AND PERIMETER CORNER JOINTS MUST BE LATERALLY RESTRAINED.

LOADING

TOTAL LOAD CASES: (4)

CHORDS

MEMB. FR-TO	MAX. FACTORED FORCE (LBS)	FACTORED VERT. LOAD LC1 (PLF) FROM	TO	MAX CSI (LC)	MAX. UNBRAC LENGTH
A- B	0 / 34	-112.4	-112.4	0.15 (1)	10.00
B- C	-2906 / 0	-112.4	-112.4	0.46 (1)	3.67
C- D	-2655 / 0	-112.4	-112.4	0.43 (1)	3.85
D- E	-2769 / 0	-112.4	-112.4	0.56 (1)	3.60
E- F	-2769 / 0	-112.4	-112.4	0.56 (1)	3.60
F- G	-2655 / 0	-112.4	-112.4	0.43 (1)	3.85
G- H	-2906 / 0	-112.4	-112.4	0.46 (1)	3.67
H- I	0 / 34	-112.4	-112.4	0.15 (1)	10.00
R- B	-2132 / 0	0.0	0.0	0.22 (1)	5.81
J- H	-2132 / 0	0.0	0.0	0.22 (1)	5.81
R- Q	0 / 0	-18.5	-18.5	0.10 (4)	10.00
Q- P	0 / 2624	-18.5	-18.5	0.48 (1)	10.00
P- O	0 / 2352	-18.5	-18.5	0.44 (1)	10.00
O- N	0 / 2352	-18.5	-18.5	0.44 (1)	10.00
N- M	0 / 2352	-18.5	-18.5	0.44 (1)	10.00
M- L	0 / 2352	-18.5	-18.5	0.44 (1)	10.00
L- K	0 / 2624	-18.5	-18.5	0.48 (1)	10.00
K- J	0 / 0	-18.5	-18.5	0.10 (4)	10.00

WEBS

MEMB. FR-TO	MAX. FACTORED FORCE (LBS)	MAX CSI (LC)
Q- C	-358 / 0	0.08 (1)
C- P	-335 / 0	0.21 (1)
P- D	0 / 294	0.07 (1)
D- N	0 / 601	0.14 (1)
N- E	-769 / 0	0.45 (1)
N- F	0 / 601	0.14 (1)
L- F	0 / 294	0.07 (1)
L- G	-335 / 0	0.21 (1)
K- G	-358 / 0	0.08 (1)
B- Q	0 / 2661	0.60 (1)
K- H	0 / 2661	0.60 (1)

DESIGN CRITERIA

SPECIFIED LOADS:

TOP CH.	LL	=	32.5	PSF
	DL	=	6.0	PSF
BOT CH.	LL	=	0.0	PSF
	DL	=	7.4	PSF
TOTAL LOAD		=	45.9	PSF

SPACING = 24.0 IN. C/C

LOADING IN FLAT SECTION BASED ON A SLOPE OF 6.00/12

THIS TRUSS IS DESIGNED FOR RESIDENTIAL OR SMALL BUILDING REQUIREMENTS OF PART 9, NBCC 2015

THIS DESIGN COMPLIES WITH:
- PART 9 OF BCBC 2018 , ABC 2019
- PART 9 OF OBC 2012 (2019 AMENDMENT)
- CSA 086-14
- TPIC 2014

(55 % OF 43.9 P.S.F. G.S.L. PLUS 8.4 P.S.F. RAIN LOAD) EQUALS 32.5 P.S.F. SPECIFIED ROOF LIVE LOAD

ALLOWABLE DEFL.(LL)= L/360 (1.03")
CALCULATED VERT. DEFL.(LL) = L/ 999 (0.15")
ALLOWABLE DEFL.(TL)= L/360 (1.03")
CALCULATED VERT. DEFL.(TL) = L/ 999 (0.26")

CSI: TC=0.56/1.00 (D-E:1) , BC=0.48/1.00 (K-L:1) , WB=0.60/1.00 (H-K:1) , SSI=0.30/1.00 (D-E:1)

DOL LUMBER=1.00 NAIL=1.00 LS BEND=1.10 COMP=1.10 SHEAR=1.10 TENS= 1.10

COMPANION LIVE LOAD FACTOR = 1.00

TRUSS PLATE MANUFACTURER IS NOT RESPONSIBLE FOR QUALITY CONTROL IN THE TRUSS MANUFACTURING PLANT .

NAIL VALUES

PLATE	GRIP(DRY) (PSI) MAX	MIN	SHEAR (PLI) MAX	MIN	SECTION (PLI) MAX	MIN
MT20	650	371	1747	788	1987	1873

PLATE PLACEMENT TOL. = 0.250 inches

PLATE ROTATION TOL. = 5.0 Deg.

JSI GRIP= 0.88 (K) (INPUT = 0.90)
JSI METAL= 0.72 (O) (INPUT = 1.00)

LICENSED PROFESSIONAL ENGINEER
06-24-22
H. J. G. ALVES
100009024
PROVINCE OF ONTARIO

Structural component only
DWG# T-2215296

REVIEWED

JOB NAME	TRUSS NAME	QUANTITY	PLY	JOB DESC.	DRWG NO.
423610	T3S	1	1	BAYVIEW WELLINGTON TRUSS DESC.	

Tamarack Roof Truss, Burlington

Version 8.530 S Feb 23 2022 MiTek Industries, Inc. Fri Jun 24 13:52:21 2022 Page 1
ID:c3jyj23uDijq_8pvRKbkZpy75XW-7AYNoh?txwwsm8dFotl0kCXRyvz633NjVsFn1tz33ae

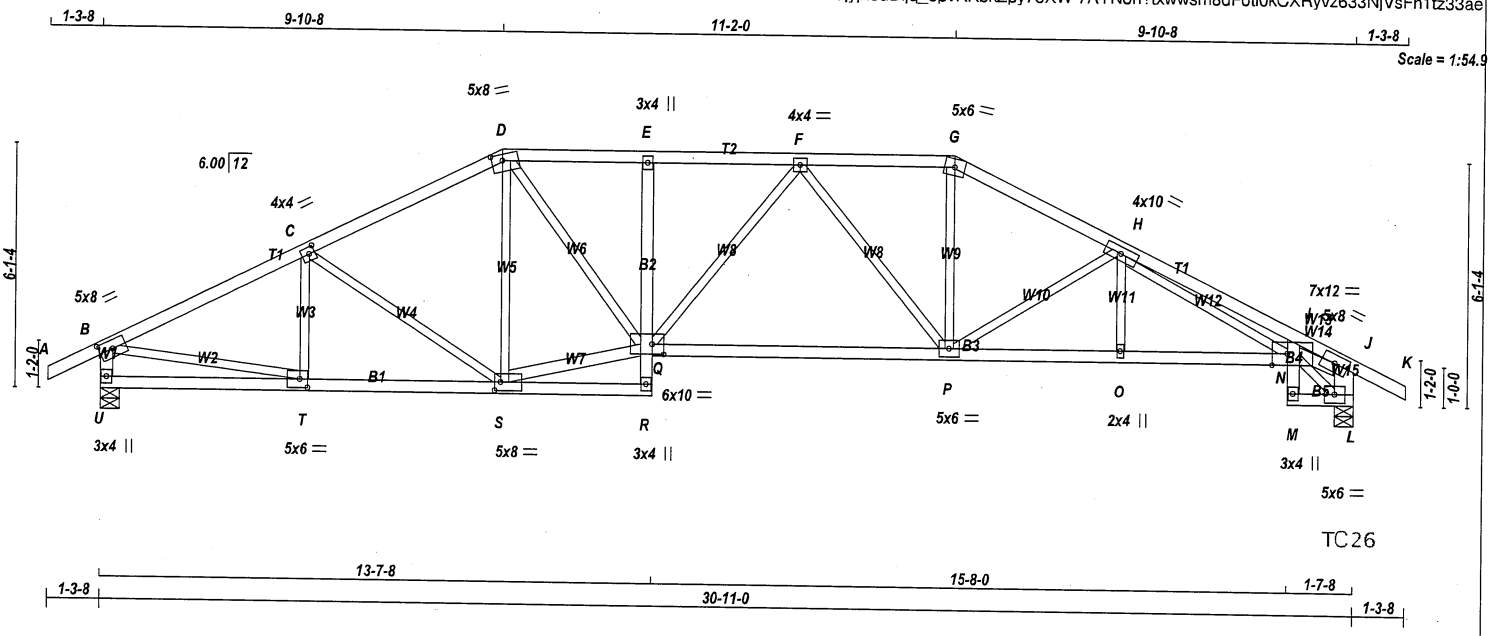

TOTAL WEIGHT = 136 lb
[M][F]

LUMBER
N. L. G. A. RULES

CHORDS	SIZE		LUMBER	DESCR.
A - D	2x4	DRY	No.2	SPF
D - G	2x4	DRY	No.2	SPF
G - K	2x4	DRY	No.2	SPF
U - B	2x4	DRY	No.2	SPF
L - J	2x6	DRY	No.2	SPF
U - R	2x4	DRY	No.2	SPF
R - E	2x4	DRY	No.2	SPF
Q - N	2x4	DRY	No.2	SPF
M - I	2x4	DRY	No.2	SPF
M - L	2x4	DRY	No.2	SPF
ALL WEBS	2x3	DRY	No.2	SPF
EXCEPT				
S - Q	2x4	DRY	No.2	SPF
N - J	2x4	DRY	No.2	SPF

DRY: SEASONED LUMBER.

PLATES (table is in inches)

JT	TYPE	PLATES	W	LEN	Y	X
B	TMVW-t	MT20	5.0	8.0	2.50	4.00
C	TMWW-t	MT20	4.0	4.0	2.00	1.75
D	TTWW-m	MT20	5.0	8.0	1.75	3.25
E	TMV+p	MT20	3.0	4.0		
F	TMWW-t	MT20	4.0	4.0		
G	TTW-m	MT20	5.0	6.0		
H	TMWWW-t	MT20	4.0	10.0		
I						
I	TMBVWWW*-I	MT20	7.0	12.0	Edge	4.50
J	TMVW-t	MT20	5.0	8.0		
L	BMVW1-t	MT20	5.0	6.0		
M	BMV+p	MT20	3.0	4.0		
N						
O	BMW+w	MT20	2.0	4.0		
P	BMWWW-t	MT20	5.0	6.0		
Q	BVMWWW-I	MT20	6.0	10.0	3.00	3.50
R	BMV+p	MT20	3.0	4.0		
S	BMWWW-t	MT20	5.0	8.0	2.50	1.75
T	BMWW-t	MT20	5.0	6.0	2.50	2.25
U	BMV1+p	MT20	3.0	4.0		

LICENSED PROFESSIONAL ENGINEER
06-24-22
H. J. G. ALVES
100009024
PROVINCE OF ONTARIO

Structural only
DWG# T-2215273

DIMENSIONS, SUPPORTS AND LOADINGS SPECIFIED BY FABRICATOR TO BE VERIFIED BY BUILDING DESIGNER

BEARINGS

JT	FACTORED GROSS REACTION VERT	HORZ	MAXIMUM FACTORED GROSS REACTION DOWN	HORZ	UPLIFT	INPUT BRG IN-SX	REQRD BRG IN-SX
U	2173	0	2173	0	0	5-8	5-8
L	2180	0	2180	0	0	5-8	5-8

ALLOW FOR 0.3" OF HORIZONTAL MOVEMENT DUE TO TOTAL LOAD

UNFACTORED REACTIONS

JT	1ST LCASE COMBINED	MAX./MIN. COMPONENT REACTIONS SNOW	LIVE	PERM.LIVE	WIND	DEAD	SOIL
U	1520	1090 / 0	0 / 0	0 / 0	0 / 0	430 / 0	0 / 0
L	1525	1094 / 0	0 / 0	0 / 0	0 / 0	431 / 0	0 / 0

BEARING MATERIAL TO BE SPF NO.2 OR BETTER AT JOINT(S) U, L

BRACING
TOP CHORD TO BE SHEATHED OR MAX. PURLIN SPACING = 2.69 FT.
MAX. UNBRACED BOTTOM CHORD LENGTH = 7.81 FT OR RIGID CEILING DIRECTLY APPLIED.

ALL PITCH BREAKS AND PERIMETER CORNER JOINTS MUST BE LATERALLY RESTRAINED.

LOADING
TOTAL LOAD CASES: (4)

CHORDS

MEMB. FR-TO	MAX. FACTORED FORCE (LBS)	FACTORED VERT. LOAD LC1 (PLF) FROM	TO	MAX CSI (LC)	MAX. UNBRAC LENGTH
A- B	0 / 34	-112.4	-112.4	0.15 (1)	10.00
B- C	-2901 / 0	-112.4	-112.4	0.46 (1)	3.68
C- D	-2652 / 0	-112.4	-112.4	0.44 (1)	3.85
D- E	-3201 / 0	-112.4	-112.4	0.27 (1)	3.70
E- F	-3213 / 0	-112.4	-112.4	0.27 (1)	3.70
F- G	-2847 / 0	-112.4	-112.4	0.26 (1)	3.91
G- H	-3189 / 0	-112.4	-112.4	0.41 (1)	3.56
H- I	-4769 / 0	-112.4	-112.4	0.64 (1)	2.69
I- J	-4356 / 0	-112.4	-112.4	0.37 (1)	3.09
J- K	0 / 34	-112.4	-112.4	0.15 (1)	10.00
U- B	-2129 / 0	0.0	0.0	0.22 (1)	5.81
L- J	-1968 / 0	0.0	0.0	0.13 (1)	7.19
U- T	0 / 0	-18.5	-18.5	0.10 (4)	10.00
T- S	0 / 2619	-18.5	-18.5	0.48 (1)	10.00
S- R	0 / 60	-18.5	-18.5	0.08 (4)	10.00
R- Q	0 / 27	0.0	0.0	0.08 (1)	10.00
Q- E	-433 / 0	0.0	0.0	0.12 (1)	7.81
Q- P	0 / 3209	-18.5	-18.5	0.64 (1)	10.00
P- O	0 / 3533	-18.5	-18.5	0.69 (1)	10.00
O- N	0 / 3533	-18.5	-18.5	0.63 (1)	10.00
M- N	0 / 15	0.0	0.0	0.40 (1)	10.00
N- I	-214 / 0	0.0	0.0	0.31 (1)	7.81
M- L	0 / 293	-18.5	-18.5	0.05 (1)	10.00

WEBS

MEMB. FR-TO	MAX. FACTORED FORCE (LBS)	MAX CSI (LC)
T- C	-357 / 0	0.08 (1)
C- S	-335 / 0	0.21 (1)
S- D	-349 / 0	0.20 (1)
S- Q	0 / 2371	0.38 (1)
D- Q	0 / 1428	0.32 (1)
P- G	0 / 1068	0.24 (1)
P- H	-843 / 0	0.35 (1)
O- H	0 / 70	0.02 (4)
B- T	0 / 2657	0.60 (1)
Q- F	0 / 25	0.01 (4)
F- P	-593 / 0	0.39 (1)
N- L	-354 / 0	0.05 (1)
N- J	0 / 3836	0.62 (1)
H- N	0 / 919	0.21 (1)

DESIGN CRITERIA

SPECIFIED LOADS:

TOP CH.	LL	=	32.5	PSF
	DL	=	6.0	PSF
BOT CH.	LL	=	0.0	PSF
	DL	=	7.4	PSF
TOTAL LOAD		=	45.9	PSF

SPACING = 24.0 IN. C/C

LOADING IN FLAT SECTION BASED ON A SLOPE OF 6.00/12

THIS TRUSS IS DESIGNED FOR RESIDENTIAL OR SMALL BUILDING REQUIREMENTS OF PART 9, NBCC 2015

THIS DESIGN COMPLIES WITH:
- PART 9 OF BCBC 2018 , ABC 2019
- PART 9 OF OBC 2012 (2019 AMENDMENT)
- CSA 086-14
- TPIC 2014

DESIGN ASSUMPTIONS
-OVERHANG NOT TO BE ALTERED OR CUT OFF.

(55 % OF 43.9 P.S.F. G.S.L. PLUS 8.4 P.S.F. RAIN LOAD) EQUALS 32.5 P.S.F. SPECIFIED ROOF LIVE LOAD

ALLOWABLE DEFL.(LL)= L/360 (1.03")
CALCULATED VERT. DEFL.(LL) = L/ 999 (0.21")
ALLOWABLE DEFL.(TL)= L/360 (1.03")
CALCULATED VERT. DEFL.(TL) = L/ 839 (0.44")

CSI: TC=0.64/1.00 (H-I:1) , BC=0.69/1.00 (O-P:1) , WB=0.62/1.00 (J-N:1) , SSI=0.40/1.00 (I-N:1)

DOL LUMBER=1.00 NAIL=1.00 LS BEND=1.10 COMP=1.10 SHEAR=1.10 TENS= 1.10

COMPANION LIVE LOAD FACTOR = 1.00

AUTOSOLVE LEFT HEEL ONLY

TRUSS PLATE MANUFACTURER IS NOT RESPONSIBLE FOR QUALITY CONTROL IN THE TRUSS MANUFACTURING PLANT .

NAIL VALUES

PLATE	GRIP(DRY) (PSI) MAX	MIN	SHEAR (PLI) MAX	MIN	SECTION (PLI) MAX	MIN
MT20	650	371	1747	788	1987	1873

PLATE PLACEMENT TOL. = 0.250 inches

PLATE ROTATION TOL. = 5.0 Deg.

JSI GRIP= 0.90 (J) (INPUT = 0.90)
JSI METAL= 0.80 (J) (INPUT = 1.00)

REVIEWED

CONTINUED ON PAGE 2

Edge - INDICATES REFERENCE CORNER OF PLATE TOUCHES EDGE OF CHORD.

NOTES- (1)
1) Lateral braces to be a minimum of 2X4 SPF #2.

LICENSED PROFESSIONAL ENGINEER
06-24-22
H. J. G. ALVES
100009024
PROVINCE OF ONTARIO

Structural component only
DWG# T-2215273

REVIEWED

JOB NAME	TRUSS NAME	QUANTITY	PLY	JOB DESC.	DRWG NO.
423611	T4	1	1	BAYVIEW WELLINGTON TRUSS DESC.	

Tamarack Roof Truss, Burlington

Version 8.530 S Feb 23 2022 MiTek Industries, Inc. Fri Jun 24 14:02:29 2022 Page 1
ID:c3jyj23uDijq_8pvRKbkZpy75XW-K8HDPbMFIjWbja66PZfbNQjLx_W_W13CJSXyNez33R8

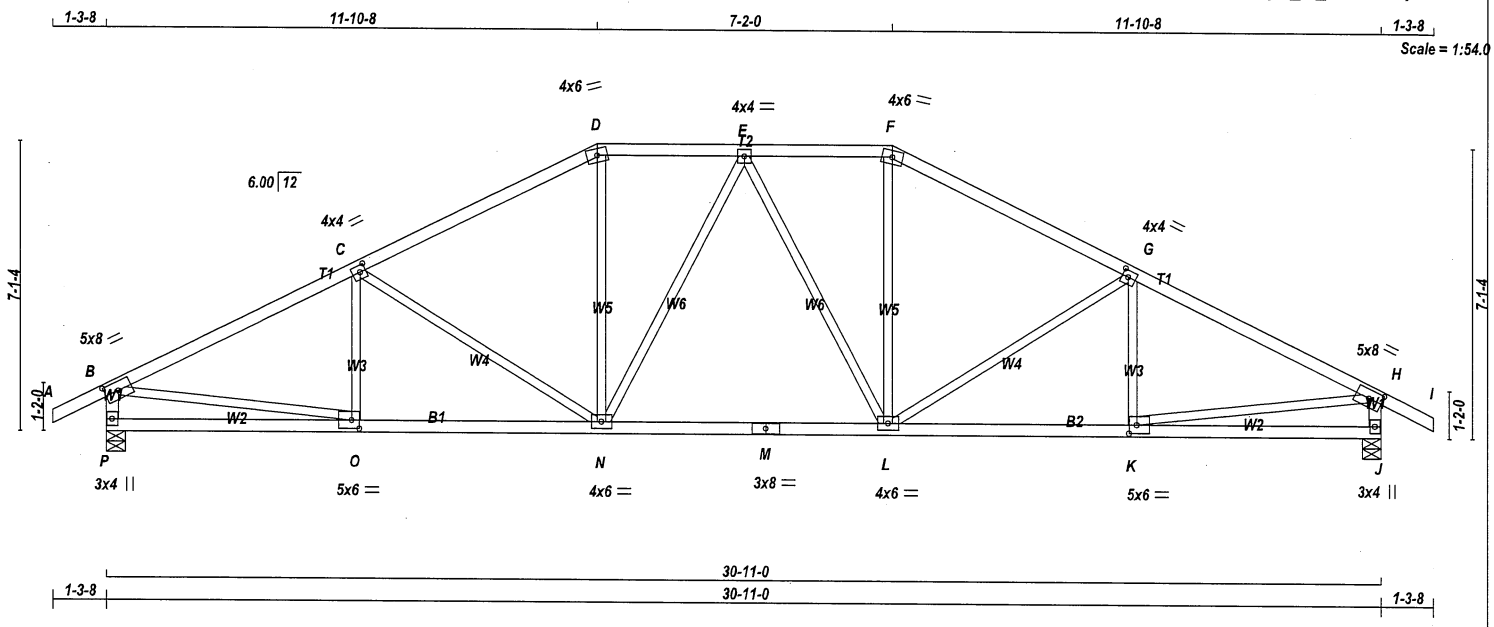

TOTAL WEIGHT = 128 lb

LUMBER
N. L. G. A. RULES

CHORDS	SIZE		LUMBER	DESCR.
A - D	2x4	DRY	No.2	SPF
D - F	2x4	DRY	No.2	SPF
F - I	2x4	DRY	No.2	SPF
P - B	2x4	DRY	No.2	SPF
J - H	2x4	DRY	No.2	SPF
P - M	2x4	DRY	No.2	SPF
M - J	2x4	DRY	No.2	SPF
ALL WEBS EXCEPT	2x3	DRY	No.2	SPF

DRY: SEASONED LUMBER.

PLATES (table is in inches)

JT	TYPE	PLATES	W	LEN	Y	X
B	TMVW-t	MT20	5.0	8.0	2.50	4.00
C	TMWW-t	MT20	4.0	4.0	2.00	1.75
D	TTW-m	MT20	4.0	6.0		
E	TMWW-t	MT20	4.0	4.0		
F	TTW-m	MT20	4.0	6.0		
G	TMWW-t	MT20	4.0	4.0	2.00	1.75
H	TMVW-t	MT20	5.0	8.0	2.50	4.00
J	BMV1+p	MT20	3.0	4.0		
K	BMWW-t	MT20	5.0	6.0	2.50	2.25
L	BMWWW-t	MT20	4.0	6.0		
M	BS-t	MT20	3.0	8.0		
N	BMWWW-t	MT20	4.0	6.0		
O	BMWW-t	MT20	5.0	6.0	2.50	2.25
P	BMV1+p	MT20	3.0	4.0		

NOTES- (1)
1) Lateral braces to be a minimum of 2X4 SPF #2.

DIMENSIONS, SUPPORTS AND LOADINGS SPECIFIED BY FABRICATOR TO BE VERIFIED BY BUILDING DESIGNER

BEARINGS

JT	FACTORED GROSS REACTION VERT	HORZ	MAXIMUM FACTORED GROSS REACTION DOWN	HORZ	UPLIFT	INPUT BRG IN-SX	REQRD BRG IN-SX
P	2177	0	2177	0	0	5-8	5-8
J	2177	0	2177	0	0	5-8	5-8

UNFACTORED REACTIONS

JT	1ST LCASE COMBINED	MAX./MIN. COMPONENT REACTIONS SNOW	LIVE	PERM.LIVE	WIND	DEAD	SOIL
P	1523	1092 / 0	0 / 0	0 / 0	0 / 0	431 / 0	0 / 0
J	1523	1092 / 0	0 / 0	0 / 0	0 / 0	431 / 0	0 / 0

BEARING MATERIAL TO BE SPF NO.2 OR BETTER AT JOINT(S) P, J

BRACING
TOP CHORD TO BE SHEATHED OR MAX. PURLIN SPACING = 3.38 FT.
MAX. UNBRACED BOTTOM CHORD LENGTH = 10.00 FT OR RIGID CEILING DIRECTLY APPLIED.

ALL PITCH BREAKS AND PERIMETER CORNER JOINTS MUST BE LATERALLY RESTRAINED.

LOADING
TOTAL LOAD CASES: (4)

CHORDS

MEMB. FR-TO	MAX. FACTORED FORCE (LBS)	FACTORED VERT. LOAD (PLF) FROM	TO	LC1 CSI (LC)	MAX. UNBRAC LENGTH
A- B	0 / 34	-112.4	-112.4	0.15 (1)	10.00
B- C	-2946 / 0	-112.4	-112.4	0.68 (1)	3.38
C- D	-2474 / 0	-112.4	-112.4	0.61 (1)	3.73
D- E	-2190 / 0	-112.4	-112.4	0.22 (1)	4.42
E- F	-2190 / 0	-112.4	-112.4	0.22 (1)	4.42
F- G	-2474 / 0	-112.4	-112.4	0.61 (1)	3.73
G- H	-2946 / 0	-112.4	-112.4	0.68 (1)	3.38
H- I	0 / 34	-112.4	-112.4	0.15 (1)	10.00
P- B	-2127 / 0	0.0	0.0	0.21 (1)	5.81
J- H	-2127 / 0	0.0	0.0	0.21 (1)	5.81
P- O	0 / 0	-18.5	-18.5	0.14 (4)	10.00
O- N	0 / 2666	-18.5	-18.5	0.52 (1)	10.00
N- M	0 / 2312	-18.5	-18.5	0.46 (1)	10.00
M- L	0 / 2312	-18.5	-18.5	0.46 (1)	10.00
L- K	0 / 2666	-18.5	-18.5	0.52 (1)	10.00
K- J	0 / 0	-18.5	-18.5	0.14 (4)	10.00

WEBS

MEMB. FR-TO	MAX. FACTORED FORCE (LBS)	MAX CSI (LC)
O- C	-267 / 26	0.07 (1)
C- N	-581 / 0	0.56 (1)
N- D	0 / 682	0.15 (1)
N- E	-270 / 0	0.32 (1)
E- L	-270 / 0	0.32 (1)
L- F	0 / 682	0.15 (1)
L- G	-581 / 0	0.56 (1)
K- G	-267 / 26	0.07 (1)
B- O	0 / 2693	0.61 (1)
K- H	0 / 2693	0.61 (1)

DESIGN CRITERIA

SPECIFIED LOADS:

TOP CH.	LL	=	32.5	PSF
	DL	=	6.0	PSF
BOT CH.	LL	=	0.0	PSF
	DL	=	7.4	PSF
TOTAL LOAD		=	45.9	PSF

SPACING = 24.0 IN. C/C

LOADING IN FLAT SECTION BASED ON A SLOPE OF 6.00/12

THIS TRUSS IS DESIGNED FOR RESIDENTIAL OR SMALL BUILDING REQUIREMENTS OF PART 9, NBCC 2015

THIS DESIGN COMPLIES WITH:
- PART 9 OF BCBC 2018 , ABC 2019
- PART 9 OF OBC 2012 (2019 AMENDMENT)
- CSA 086-14
- TPIC 2014

(55 % OF 43.9 P.S.F. G.S.L. PLUS 8.4 P.S.F. RAIN LOAD) EQUALS 32.5 P.S.F. SPECIFIED ROOF LIVE LOAD

ALLOWABLE DEFL.(LL)= L/360 (1.03")
CALCULATED VERT. DEFL.(LL) = L/ 999 (0.13")
ALLOWABLE DEFL.(TL)= L/360 (1.03")
CALCULATED VERT. DEFL.(TL) = L/ 999 (0.26")

CSI: TC=0.68/1.00 (G-H:1) , BC=0.52/1.00 (K-L:1) , WB=0.61/1.00 (H-K:1) , SSI=0.29/1.00 (G-H:1)

DOL LUMBER=1.00 NAIL=1.00 LS BEND=1.10 COMP=1.10 SHEAR=1.10 TENS= 1.10

COMPANION LIVE LOAD FACTOR = 1.00

TRUSS PLATE MANUFACTURER IS NOT RESPONSIBLE FOR QUALITY CONTROL IN THE TRUSS MANUFACTURING PLANT .

NAIL VALUES

PLATE	GRIP(DRY) (PSI) MAX	MIN	SHEAR (PLI) MAX	MIN	SECTION (PLI) MAX	MIN
MT20	650	371	1747	788	1987	1873

PLATE PLACEMENT TOL. = 0.250 inches

PLATE ROTATION TOL. = 5.0 Deg.

JSI GRIP= 0.87 (O) (INPUT = 0.90)
JSI METAL= 0.77 (M) (INPUT = 1.00)

LICENSED PROFESSIONAL ENGINEER
06-24-22
H. J. G. ALVES
100009024
PROVINCE OF ONTARIO

Structural component only
DWG# T-2215297

REVIEWED

JOB NAME	TRUSS NAME	QUANTITY	PLY	JOB DESC.	DRWG NO.
423610	T4S	1	1	BAYVIEW WELLINGTON TRUSS DESC.	

Tamarack Roof Truss, Burlington

Version 8.530 S Feb 23 2022 MiTek Industries, Inc. Fri Jun 24 13:52:22 2022 Page 1
ID:c3jyj23uDijq_8pvRKbkZpy75XW-bN6I01?ViD2jOICSMaGFHP4c1IJFoVJskW?LZJz33ad

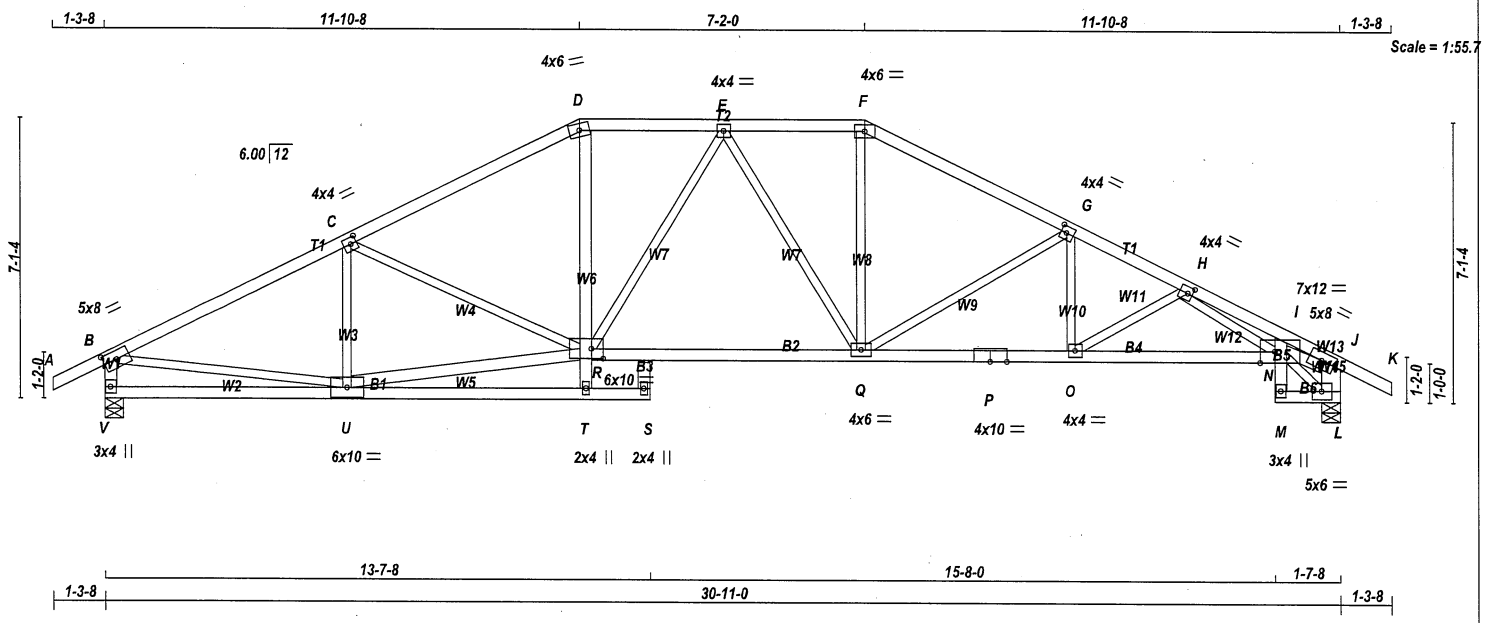

TOTAL WEIGHT = 140 lb

LUMBER
N. L. G. A. RULES

CHORDS	SIZE		LUMBER	DESCR.
A - D	2x4	DRY	No.2	SPF
D - F	2x4	DRY	No.2	SPF
F - K	2x4	DRY	No.2	SPF
V - B	2x4	DRY	No.2	SPF
L - J	2x6	DRY	No.2	SPF
V - S	2x4	DRY	No.2	SPF
R - P	2x4	DRY	No.2	SPF
P - N	2x4	DRY	No.2	SPF
M - I	2x4	DRY	No.2	SPF
M - L	2x4	DRY	No.2	SPF
ALL WEBS	2x3	DRY	No.2	SPF
EXCEPT				
T - D	2x4	DRY	No.2	SPF
U - R	2x4	DRY	No.2	SPF
N - J	2x4	DRY	No.2	SPF

DRY: SEASONED LUMBER.

PLATES (table is in inches)

JT	TYPE	PLATES	W	LEN	Y	X
B	TMVW-t	MT20	5.0	8.0	2.50	4.00
C	TMWW-t	MT20	4.0	4.0	2.00	1.75
D	TTW-m	MT20	4.0	6.0		
E	TMWW-t	MT20	4.0	4.0		
F	TTW-l	MT20	4.0	6.0		
G	TMWW-t	MT20	4.0	4.0	2.00	1.75
H	TMWW-t	MT20	4.0	4.0	2.00	1.50
I						
I	TMBVWWW*-I	MT20	7.0	12.0	Edge	4.50
J	TMVW-t	MT20	5.0	8.0		
L	BMVW1-t	MT20	5.0	6.0		
M	BMV+p	MT20	3.0	4.0		
N						
O	BMWW-t	MT20	4.0	4.0		
P	BS-t	MT20	4.0	10.0		
Q	BMWWW-t	MT20	4.0	6.0		
R	BWMWWW*-I	MT20	6.0	10.0	3.00	3.50
S	NP+w	MT20	2.0	4.0		
T	BMW+w	MT20	2.0	4.0		
U	BMWWW-t	MT20	6.0	10.0		
V	BMV1+p	MT20	3.0	4.0		

LICENSED PROFESSIONAL ENGINEER
06-24-22
H. J. G. ALVES
100009024
PROVINCE OF ONTARIO

Structural component only
DWG# T-2215274

DIMENSIONS, SUPPORTS AND LOADINGS SPECIFIED BY FABRICATOR TO BE VERIFIED BY BUILDING DESIGNER

BEARINGS

JT	FACTORED GROSS REACTION VERT	HORZ	MAXIMUM FACTORED GROSS REACTION DOWN	HORZ	UPLIFT	INPUT BRG IN-SX	REQRD BRG IN-SX
V	2192	0	2192	0	0	5-8	5-8
L	2192	0	2192	0	0	5-8	5-8

UNFACTORED REACTIONS

JT	1ST LCASE COMBINED	MAX./MIN. COMPONENT REACTIONS SNOW	LIVE	PERM.LIVE	WIND	DEAD	SOIL
V	1535	1090 / 0	0 / 0	0 / 0	0 / 0	445 / 0	0 / 0
L	1535	1094 / 0	0 / 0	0 / 0	0 / 0	440 / 0	0 / 0

BEARING MATERIAL TO BE SPF NO.2 OR BETTER AT JOINT(S) V, L

BRACING
TOP CHORD TO BE SHEATHED OR MAX. PURLIN SPACING = 2.75 FT.
MAX. UNBRACED BOTTOM CHORD LENGTH = 7.81 FT OR RIGID CEILING DIRECTLY APPLIED.

MAX. UNBRACED INTERIOR CHORD LENGTH = 10.00 FT

ALL PITCH BREAKS AND PERIMETER CORNER JOINTS MUST BE LATERALLY RESTRAINED.

LOADING
TOTAL LOAD CASES: (4)

CHORDS

MEMB. FR-TO	MAX. FACTORED FORCE (LBS)	FACTORED VERT. LOAD LC1 (PLF) FROM	TO	MAX CSI (LC)	MAX. UNBRAC LENGTH
A- B	0 / 34	-112.4	-112.4	0.15 (1)	10.00
B- C	-2979 / 0	-112.4	-112.4	0.69 (1)	3.36
C- D	-2900 / 0	-112.4	-112.4	0.66 (1)	3.42
D- E	-2588 / 0	-112.4	-112.4	0.24 (1)	4.10
E- F	-2583 / 0	-112.4	-112.4	0.24 (1)	4.11
F- G	-2893 / 0	-112.4	-112.4	0.48 (1)	3.66
G- H	-3749 / 0	-112.4	-112.4	0.41 (1)	3.29
H- I	-4708 / 0	-112.4	-112.4	0.55 (1)	2.75
I- J	-4303 / 0	-112.4	-112.4	0.42 (1)	3.05
J- K	0 / 34	-112.4	-112.4	0.15 (1)	10.00
V- B	-2145 / 0	0.0	0.0	0.22 (1)	5.79
L- J	-1982 / 0	0.0	0.0	0.13 (1)	7.16
V- U	0 / 0	-18.5	-18.5	0.18 (4)	10.00
U- T	0 / 61	-18.5	-18.5	0.18 (4)	10.00
T- S	0 / 0	-18.5	-18.5	0.06 (4)	10.00
R- Q	0 / 2728	-18.5	-18.5	0.55 (1)	10.00
Q- P	0 / 3380	-18.5	-18.5	0.65 (1)	10.00
P- O	0 / 3380	-18.5	-18.5	0.65 (1)	10.00
O- N	0 / 3795	-18.5	-18.5	0.69 (1)	10.00
M- N	0 / 15	0.0	0.0	0.40 (1)	10.00
N- I	-63 / 8	0.0	0.0	0.30 (1)	7.81
M- L	0 / 290	-18.5	-18.5	0.05 (1)	10.00

WEBS

MEMB. FR-TO	MAX. FACTORED FORCE (LBS)	MAX CSI (LC)
U- C	-696 / 0	0.18 (1)
T- R	0 / 80	0.10 (1)
R- D	0 / 870	0.23 (1)
Q- F	0 / 886	0.20 (1)
Q- G	-955 / 0	0.64 (1)
O- G	0 / 339	0.08 (1)
B- U	0 / 2722	0.61 (1)
U- R	0 / 2672	0.43 (1)
C- R	-150 / 0	0.12 (1)
R- E	-271 / 0	0.23 (1)
E- Q	-285 / 0	0.24 (1)
N- L	-350 / 0	0.05 (1)
N- J	0 / 3773	0.61 (1)
O- H	-486 / 0	0.11 (1)
H- N	0 / 576	0.13 (1)

DESIGN CRITERIA

SPECIFIED LOADS:

TOP CH.	LL	=	32.5	PSF
	DL	=	6.0	PSF
BOT CH.	LL	=	0.0	PSF
	DL	=	7.4	PSF
TOTAL LOAD		=	45.9	PSF

SPACING = 24.0 IN. C/C

LOADING IN FLAT SECTION BASED ON A SLOPE OF 6.00/12

THIS TRUSS IS DESIGNED FOR RESIDENTIAL OR SMALL BUILDING REQUIREMENTS OF PART 9, NBCC 2015

THIS DESIGN COMPLIES WITH:
- PART 9 OF BCBC 2018 , ABC 2019
- PART 9 OF OBC 2012 (2019 AMENDMENT)
- CSA 086-14
- TPIC 2014

DESIGN ASSUMPTIONS
-OVERHANG NOT TO BE ALTERED OR CUT OFF.

(55 % OF 43.9 P.S.F. G.S.L. PLUS 8.4 P.S.F. RAIN LOAD) EQUALS 32.5 P.S.F. SPECIFIED ROOF LIVE LOAD

ALLOWABLE DEFL.(LL)= L/360 (1.03")
CALCULATED VERT. DEFL.(LL) = L/ 999 (0.19")
ALLOWABLE DEFL.(TL)= L/360 (1.03")
CALCULATED VERT. DEFL.(TL) = L/ 968 (0.38")

CSI: TC=0.69/1.00 (B-C:1) , BC=0.69/1.00 (N-O:1) , WB=0.64/1.00 (G-Q:1) , SSI=0.40/1.00 (I-N:1)

DOL LUMBER=1.00 NAIL=1.00 LS BEND=1.10 COMP=1.10 SHEAR=1.10 TENS= 1.10

COMPANION LIVE LOAD FACTOR = 1.00

AUTOSOLVE LEFT HEEL ONLY

TRUSS PLATE MANUFACTURER IS NOT RESPONSIBLE FOR QUALITY CONTROL IN THE TRUSS MANUFACTURING PLANT .

NAIL VALUES

PLATE	GRIP(DRY) (PSI) MAX	MIN	SHEAR (PLI) MAX	MIN	SECTION (PLI) MAX	MIN
MT20	650	371	1747	788	1987	1873

PLATE PLACEMENT TOL. = 0.250 inches

PLATE ROTATION TOL. = 5.0 Deg.

JSI GRIP= 0.89 (R) (INPUT = 0.90)
JSI METAL= 0.79 (J) (INPUT = 1.00)

[M][F]

REVIEWED

CONTINUED ON PAGE 2

JOB NAME	TRUSS NAME	QUANTITY	PLY	JOB DESC. BAYVIEW WELLINGTON	DRWG NO.
423610	T4S	1	1	TRUSS DESC.	

Edge - INDICATES REFERENCE CORNER OF PLATE TOUCHES EDGE OF CHORD.

NOTES- (1)
1) Lateral braces to be a minimum of 2X4 SPF #2.

LICENSED PROFESSIONAL ENGINEER
06-24-22
H. J. G. ALVES
100009024
PROVINCE OF ONTARIO

Structural component only
DWG# T-2215274

REVIEWED

JOB NAME	TRUSS NAME	QUANTITY	PLY	JOB DESC.	DRWG NO.
423610	T5	1	1	BAYVIEW WELLINGTON TRUSS DESC.	

Tamarack Roof Truss, Burlington

Version 8.530 S Feb 23 2022 MiTek Industries, Inc. Fri Jun 24 13:52:23 2022 Page 1
ID:c3jyj23uDijq_8pvRKbkZpy75XW-4Zg7DN07TXAa0RnevlnUpddswih9Xxb0yAku5mz33ac

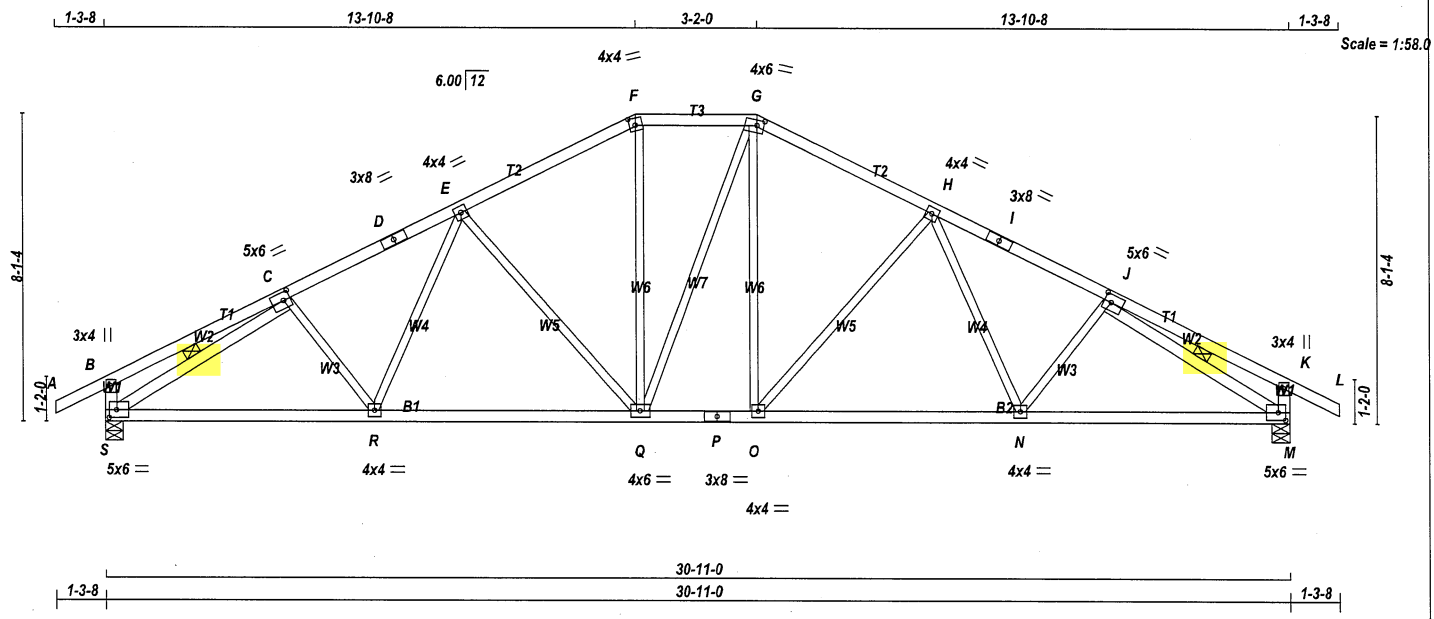

TOTAL WEIGHT = 137 lb

LUMBER

N. L. G. A. RULES

CHORDS	SIZE		LUMBER	DESCR.
A - D	2x4	DRY	No.2	SPF
D - F	2x4	DRY	No.2	SPF
F - G	2x4	DRY	No.2	SPF
G - I	2x4	DRY	No.2	SPF
I - L	2x4	DRY	No.2	SPF
S - B	2x4	DRY	No.2	SPF
M - K	2x4	DRY	No.2	SPF
S - P	2x4	DRY	No.2	SPF
P - M	2x4	DRY	No.2	SPF
ALL WEBS	2x3	DRY	No.2	SPF
EXCEPT				
S - C	2x4	DRY	No.2	SPF
J - M	2x4	DRY	No.2	SPF

DRY: SEASONED LUMBER.

PLATES (table is in inches)

JT	TYPE	PLATES	W	LEN	Y	X
B	TMV+p	MT20	3.0	4.0		
C	TMWW-t	MT20	5.0	6.0	2.50	2.25
D	TS-t	MT20	3.0	8.0		
E	TMWW-t	MT20	4.0	4.0		
F	TTW-m	MT20	4.0	4.0	2.25	1.75
G	TTWW-m	MT20	4.0	6.0	1.75	2.25
H	TMWW-t	MT20	4.0	4.0		
I	TS-t	MT20	3.0	8.0		
J	TMWW-t	MT20	5.0	6.0	2.50	2.25
K	TMV+p	MT20	3.0	4.0		
M	BMVW1-t	MT20	5.0	6.0	2.50	2.25
N, O, R						
N	BMWW-t	MT20	4.0	4.0		
P	BS-t	MT20	3.0	8.0		
Q	BMWWW-t	MT20	4.0	6.0		
S	BMVW1-t	MT20	5.0	6.0	2.50	2.25

NOTES- (1)
1) Lateral braces to be a minimum of 2X4 SPF #2.

LICENSED PROFESSIONAL ENGINEER
06-24-22
H. J. G. ALVES
100009024
PROVINCE OF ONTARIO

Structural component only
DWG# T-2215275

DIMENSIONS, SUPPORTS AND LOADINGS SPECIFIED BY FABRICATOR TO BE VERIFIED BY BUILDING DESIGNER

BEARINGS

JT	FACTORED GROSS REACTION VERT	HORZ	MAXIMUM FACTORED GROSS REACTION DOWN	HORZ	UPLIFT	INPUT BRG IN-SX	REQRD BRG IN-SX
S	2177	0	2177	0	0	5-8	5-8
M	2177	0	2177	0	0	5-8	5-8

UNFACTORED REACTIONS

JT	1ST LCASE COMBINED	MAX./MIN. COMPONENT REACTIONS SNOW	LIVE	PERM.LIVE	WIND	DEAD	SOIL
S	1523	1092 / 0	0 / 0	0 / 0	0 / 0	431 / 0	0 / 0
M	1523	1092 / 0	0 / 0	0 / 0	0 / 0	431 / 0	0 / 0

BEARING MATERIAL TO BE SPF NO.2 OR BETTER AT JOINT(S) S, M

BRACING

TOP CHORD TO BE SHEATHED OR MAX. PURLIN SPACING = 3.86 FT.
MAX. UNBRACED BOTTOM CHORD LENGTH = 10.00 FT OR RIGID CEILING DIRECTLY APPLIED.

ALL PITCH BREAKS AND PERIMETER CORNER JOINTS MUST BE LATERALLY RESTRAINED.

1 LATERAL BRACE(S) AT 1/ 2 LENGTH OF C-S, J-M.

END VERTICAL(S) MUST BE SHEATHED OR HAVE BRACES AS INDICATED IN THE MAX. UNBRACED LENGTH COLUMN OF THE TABLE BELOW

LOADING

TOTAL LOAD CASES: (4)

CHORDS

MEMB. FR-TO	MAX. FACTORED FORCE (LBS)	FACTORED VERT. LOAD LC1 (PLF) FROM	TO	MAX CSI (LC)	MAX. UNBRAC LENGTH
A- B	0 / 34	-112.4	-112.4	0.15 (1)	10.00
B- C	0 / 21	-112.4	-112.4	0.30 (1)	10.00
C- D	-2807 / 0	-112.4	-112.4	0.36 (1)	3.86
D- E	-2807 / 0	-112.4	-112.4	0.36 (1)	3.86
E- F	-2240 / 0	-112.4	-112.4	0.33 (1)	4.27
F- G	-1990 / 0	-112.4	-112.4	0.19 (1)	4.63
G- H	-2239 / 0	-112.4	-112.4	0.33 (1)	4.27
H- I	-2808 / 0	-112.4	-112.4	0.36 (1)	3.86
I- J	-2808 / 0	-112.4	-112.4	0.36 (1)	3.86
J- K	0 / 21	-112.4	-112.4	0.30 (1)	10.00
K- L	0 / 34	-112.4	-112.4	0.15 (1)	10.00
S- B	-368 / 0	0.0	0.0	0.04 (1)	7.81
M- K	-368 / 0	0.0	0.0	0.04 (1)	7.81
S- R	0 / 2563	-18.5	-18.5	0.52 (1)	10.00
R- Q	0 / 2424	-18.5	-18.5	0.49 (1)	10.00
Q- P	0 / 1989	-18.5	-18.5	0.39 (1)	10.00
P- O	0 / 1989	-18.5	-18.5	0.39 (1)	10.00
O- N	0 / 2424	-18.5	-18.5	0.50 (1)	10.00
N- M	0 / 2564	-18.5	-18.5	0.52 (1)	10.00

WEBS

MEMB. FR-TO	MAX. FACTORED FORCE (LBS)	MAX CSI (LC)
C- R	-86 / 44	0.02 (1)
R- E	0 / 230	0.05 (1)
E- Q	-685 / 0	0.70 (1)
Q- F	0 / 611	0.14 (1)
Q- G	0 / 5	0.00 (1)
O- G	0 / 606	0.14 (1)
O- H	-687 / 0	0.70 (1)
H- N	0 / 233	0.05 (1)
N- J	-86 / 44	0.02 (1)
S- C	-3106 / 0	0.52 (1)
J- M	-3107 / 0	0.52 (1)

DESIGN CRITERIA

SPECIFIED LOADS:

TOP CH.	LL	=	32.5	PSF
	DL	=	6.0	PSF
BOT CH.	LL	=	0.0	PSF
	DL	=	7.4	PSF
TOTAL LOAD		=	45.9	PSF

SPACING = 24.0 IN. C/C

LOADING IN FLAT SECTION BASED ON A SLOPE OF 6.00/12

THIS TRUSS IS DESIGNED FOR RESIDENTIAL OR SMALL BUILDING REQUIREMENTS OF PART 9, NBCC 2015

THIS DESIGN COMPLIES WITH:
- PART 9 OF BCBC 2018 , ABC 2019
- PART 9 OF OBC 2012 (2019 AMENDMENT)
- CSA 086-14
- TPIC 2014

(55 % OF 43.9 P.S.F. G.S.L. PLUS 8.4 P.S.F. RAIN LOAD) EQUALS 32.5 P.S.F. SPECIFIED ROOF LIVE LOAD

ALLOWABLE DEFL.(LL)= L/360 (1.03")
CALCULATED VERT. DEFL.(LL) = L/ 999 (0.13")
ALLOWABLE DEFL.(TL)= L/360 (1.03")
CALCULATED VERT. DEFL.(TL) = L/ 999 (0.25")

CSI: TC=0.36/1.00 (H-J:1) , BC=0.52/1.00 (M-N:1) , WB=0.70/1.00 (H-O:1) , SSI=0.21/1.00 (B-C:1)

DOL LUMBER=1.00 NAIL=1.00 LS BEND=1.10 COMP=1.10 SHEAR=1.10 TENS= 1.10

COMPANION LIVE LOAD FACTOR = 1.00

AUTOSOLVE HEELS OFF

TRUSS PLATE MANUFACTURER IS NOT RESPONSIBLE FOR QUALITY CONTROL IN THE TRUSS MANUFACTURING PLANT .

NAIL VALUES

PLATE	GRIP(DRY) (PSI) MAX	MIN	SHEAR (PLI) MAX	MIN	SECTION (PLI) MAX	MIN
MT20	650	371	1747	788	1987	1873

PLATE PLACEMENT TOL. = 0.250 inches

PLATE ROTATION TOL. = 5.0 Deg.

JSI GRIP= 0.88 (J) (INPUT = 0.90)
JSI METAL= 0.70 (J) (INPUT = 1.00)

[M][F]

REVIEWED

JOB NAME	TRUSS NAME	QUANTITY	PLY	JOB DESC.	DRWG NO.
423610	T6	3	1	BAYVIEW WELLINGTON TRUSS DESC.	

Tamarack Roof Truss, Burlington

Version 8.530 S Feb 23 2022 MiTek Industries, Inc. Fri Jun 24 13:52:23 2022 Page 1
ID:c3jyj23uDijq_8pvRKbkZpy75XW-4Zg7DN07TXAa0RnevlnUpddlTiiWXz?0yAku5mz33ac

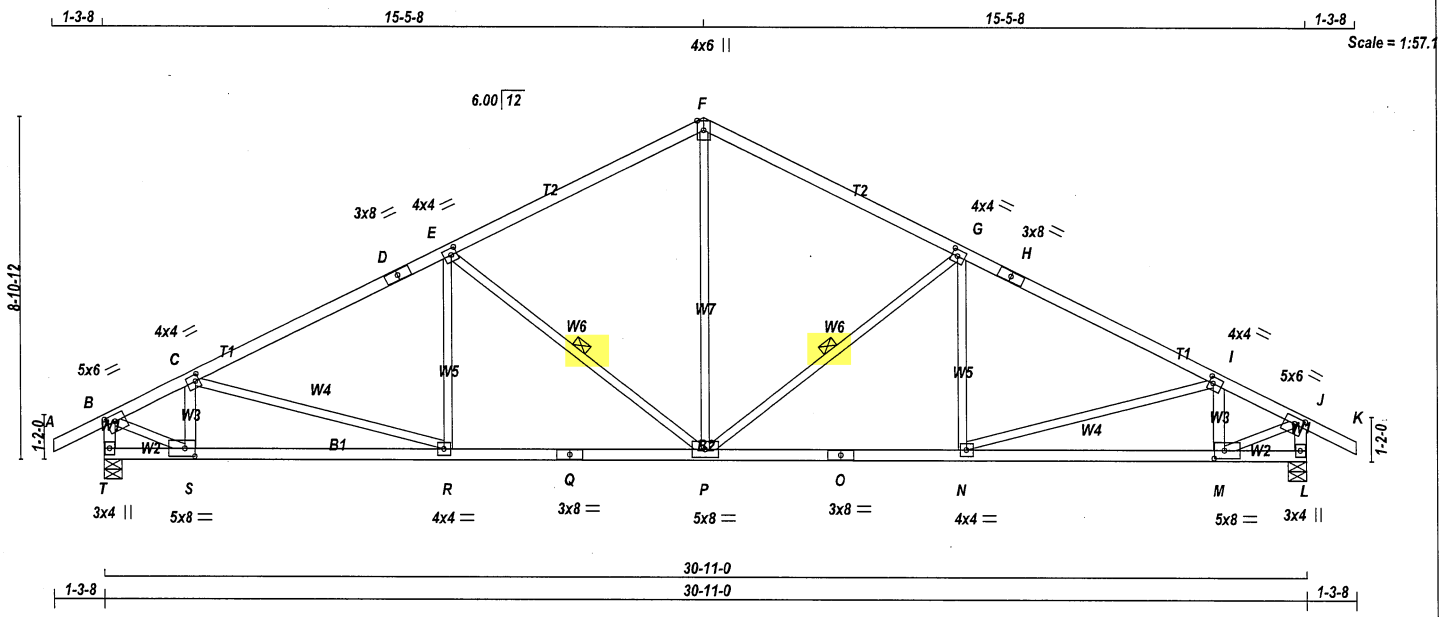

TOTAL WEIGHT = 3 X 126 = 378 lb

LUMBER

N. L. G. A. RULES

CHORDS	SIZE		LUMBER	DESCR.
A - D	2x4	DRY	No.2	SPF
D - F	2x4	DRY	No.2	SPF
F - H	2x4	DRY	No.2	SPF
H - K	2x4	DRY	No.2	SPF
T - B	2x4	DRY	No.2	SPF
L - J	2x4	DRY	No.2	SPF
T - Q	2x4	DRY	No.2	SPF
Q - O	2x4	DRY	No.2	SPF
O - L	2x4	DRY	No.2	SPF
ALL WEBS EXCEPT	2x3	DRY	No.2	SPF
M - I	2x4	DRY	No.2	SPF
S - C	2x4	DRY	No.2	SPF

DRY: SEASONED LUMBER.

PLATES (table is in inches)

JT	TYPE	PLATES	W	LEN	Y	X
B	TMVW-t	MT20	5.0	6.0	2.00	2.75
C	TMWW-t	MT20	4.0	4.0	2.00	1.25
D	TS-t	MT20	3.0	8.0		
E	TMWW-t	MT20	4.0	4.0	2.00	1.75
F	TTW+p	MT20	4.0	6.0	Edge	
G	TMWW-t	MT20	4.0	4.0	2.00	1.75
H	TS-t	MT20	3.0	8.0		
I	TMWW-t	MT20	4.0	4.0	2.00	1.25
J	TMVW-t	MT20	5.0	6.0	2.00	2.75
L	BMV1+p	MT20	3.0	4.0		
M	BMWW-t	MT20	5.0	8.0	2.50	3.25
N	BMWW-t	MT20	4.0	4.0		
O	BS-t	MT20	3.0	8.0		
P	BMWWW-t	MT20	5.0	8.0		
Q	BS-t	MT20	3.0	8.0		
R	BMWW-t	MT20	4.0	4.0		
S	BMWW-t	MT20	5.0	8.0	2.50	3.25
T	BMV1+p	MT20	3.0	4.0		

Edge - INDICATES REFERENCE CORNER OF PLATE TOUCHES EDGE OF CHORD.

NOTES- (1)

1)

LICENSED PROFESSIONAL ENGINEER
06-24-22
H. J. G. ALVES
100009024
PROVINCE OF ONTARIO

Structural component only
DWG# T-2215276

DIMENSIONS, SUPPORTS AND LOADINGS SPECIFIED BY FABRICATOR TO BE VERIFIED BY BUILDING DESIGNER

BEARINGS

JT	FACTORED GROSS REACTION VERT	HORZ	MAXIMUM FACTORED GROSS REACTION DOWN	HORZ	UPLIFT	INPUT BRG IN-SX	REQRD BRG IN-SX
T	2177	0	2177	0	0	5-8	5-8
L	2177	0	2177	0	0	5-8	5-8

UNFACTORED REACTIONS

JT	1ST LCASE COMBINED	MAX./MIN. COMPONENT REACTIONS SNOW	LIVE	PERM.LIVE	WIND	DEAD	SOIL
T	1523	1092 / 0	0 / 0	0 / 0	0 / 0	431 / 0	0 / 0
L	1523	1092 / 0	0 / 0	0 / 0	0 / 0	431 / 0	0 / 0

BEARING MATERIAL TO BE SPF NO.2 OR BETTER AT JOINT(S) T, L

BRACING

TOP CHORD TO BE SHEATHED OR MAX. PURLIN SPACING = 3.34 FT.
MAX. UNBRACED BOTTOM CHORD LENGTH = 10.00 FT OR RIGID CEILING DIRECTLY APPLIED.

ALL PITCH BREAKS AND PERIMETER CORNER JOINTS MUST BE LATERALLY RESTRAINED.

1 LATERAL BRACE(S) AT 1/ 2 LENGTH OF G-P, E-P.

END VERTICAL(S) MUST BE SHEATHED OR HAVE BRACES AS INDICATED IN THE MAX. UNBRACED LENGTH COLUMN OF THE TABLE BELOW

LOADING

TOTAL LOAD CASES: (4)

CHORDS

MEMB. FR-TO	MAX. FACTORED FORCE (LBS)	FACTORED VERT. LOAD (PLF) FROM	TO	LC1	MAX CSI (LC)	MAX. UNBRAC LENGTH
A- B	0 / 34	-112.4	-112.4	0.15 (1)	10.00	
B- C	-2475 / 0	-112.4	-112.4	0.33 (1)	4.07	
C- D	-2813 / 0	-112.4	-112.4	0.77 (1)	3.34	
D- E	-2813 / 0	-112.4	-112.4	0.77 (1)	3.34	
E- F	-2082 / 0	-112.4	-112.4	0.71 (1)	3.85	
F- G	-2082 / 0	-112.4	-112.4	0.71 (1)	3.85	
G- H	-2813 / 0	-112.4	-112.4	0.77 (1)	3.34	
H- I	-2813 / 0	-112.4	-112.4	0.77 (1)	3.34	
I- J	-2475 / 0	-112.4	-112.4	0.33 (1)	4.07	
J- K	0 / 34	-112.4	-112.4	0.15 (1)	10.00	
T- B	-2165 / 0	0.0	0.0	0.22 (1)	5.77	
L- J	-2165 / 0	0.0	0.0	0.22 (1)	5.77	
T- S	0 / 0	-18.5	-18.5	0.10 (4)	10.00	
S- R	0 / 2258	-18.5	-18.5	0.45 (1)	10.00	
R- Q	0 / 2533	-18.5	-18.5	0.50 (1)	10.00	
Q- P	0 / 2533	-18.5	-18.5	0.50 (1)	10.00	
P- O	0 / 2533	-18.5	-18.5	0.50 (1)	10.00	
O- N	0 / 2533	-18.5	-18.5	0.50 (1)	10.00	
N- M	0 / 2258	-18.5	-18.5	0.45 (1)	10.00	
M- L	0 / 0	-18.5	-18.5	0.10 (4)	10.00	

WEBS

MEMB. FR-TO	MAX. FACTORED FORCE (LBS)	MAX CSI (LC)
P- F	0 / 1248	0.28 (1)
P- G	-901 / 0	0.44 (1)
N- G	0 / 120	0.04 (4)
N- I	0 / 287	0.06 (1)
M- I	-784 / 0	0.09 (1)
E- P	-901 / 0	0.44 (1)
R- E	0 / 120	0.04 (4)
C- R	0 / 287	0.06 (1)
S- C	-784 / 0	0.09 (1)
B- S	0 / 2420	0.54 (1)
M- J	0 / 2420	0.54 (1)

[M][F]

DESIGN CRITERIA

SPECIFIED LOADS:

TOP CH.	LL	=	32.5	PSF
	DL	=	6.0	PSF
BOT CH.	LL	=	0.0	PSF
	DL	=	7.4	PSF
TOTAL LOAD		=	45.9	PSF

SPACING = 24.0 IN. C/C

THIS TRUSS IS DESIGNED FOR RESIDENTIAL OR SMALL BUILDING REQUIREMENTS OF PART 9, NBCC 2015

THIS DESIGN COMPLIES WITH:
- PART 9 OF BCBC 2018 , ABC 2019
- PART 9 OF OBC 2012 (2019 AMENDMENT)
- CSA 086-14
- TPIC 2014

(55 % OF 43.9 P.S.F. G.S.L. PLUS 8.4 P.S.F. RAIN LOAD) EQUALS 32.5 P.S.F. SPECIFIED ROOF LIVE LOAD

ALLOWABLE DEFL.(LL)= L/360 (1.03")
CALCULATED VERT. DEFL.(LL) = L/ 999 (0.12")
ALLOWABLE DEFL.(TL)= L/360 (1.03")
CALCULATED VERT. DEFL.(TL) = L/ 999 (0.23")

CSI: TC=0.77/1.00 (C-E:1) , BC=0.50/1.00 (P-R:1) , WB=0.54/1.00 (B-S:1) , SSI=0.32/1.00 (E-F:1)

DOL LUMBER=1.00 NAIL=1.00 LS BEND=1.10 COMP=1.10 SHEAR=1.10 TENS= 1.10

COMPANION LIVE LOAD FACTOR = 1.00

TRUSS PLATE MANUFACTURER IS NOT RESPONSIBLE FOR QUALITY CONTROL IN THE TRUSS MANUFACTURING PLANT .

NAIL VALUES

PLATE	GRIP(DRY) (PSI) MAX	MIN	SHEAR (PLI) MAX	MIN	SECTION (PLI) MAX	MIN
MT20	650	371	1747	788	1987	1873

PLATE PLACEMENT TOL. = 0.250 inches

PLATE ROTATION TOL. = 5.0 Deg.

JSI GRIP= 0.90 (C) (INPUT = 0.90)
JSI METAL= 0.81 (Q) (INPUT = 1.00)

REVIEWED

JOB NAME	TRUSS NAME	QUANTITY	PLY	JOB DESC.	DRWG NO.
423612	G6	1	1	BAYVIEW WELLINGTON TRUSS DESC.	

Tamarack Roof Truss, Burlington

Version 8.530 S Feb 23 2022 MiTek Industries, Inc. Fri Jun 24 14:14:00 2022 Page 1
ID:c3jyj23uDijq_8pvRKbkZpy75XW-b4XRRsjh01aY6mRvOBYeu8rZvXTGwdJwCSQ174z33GL

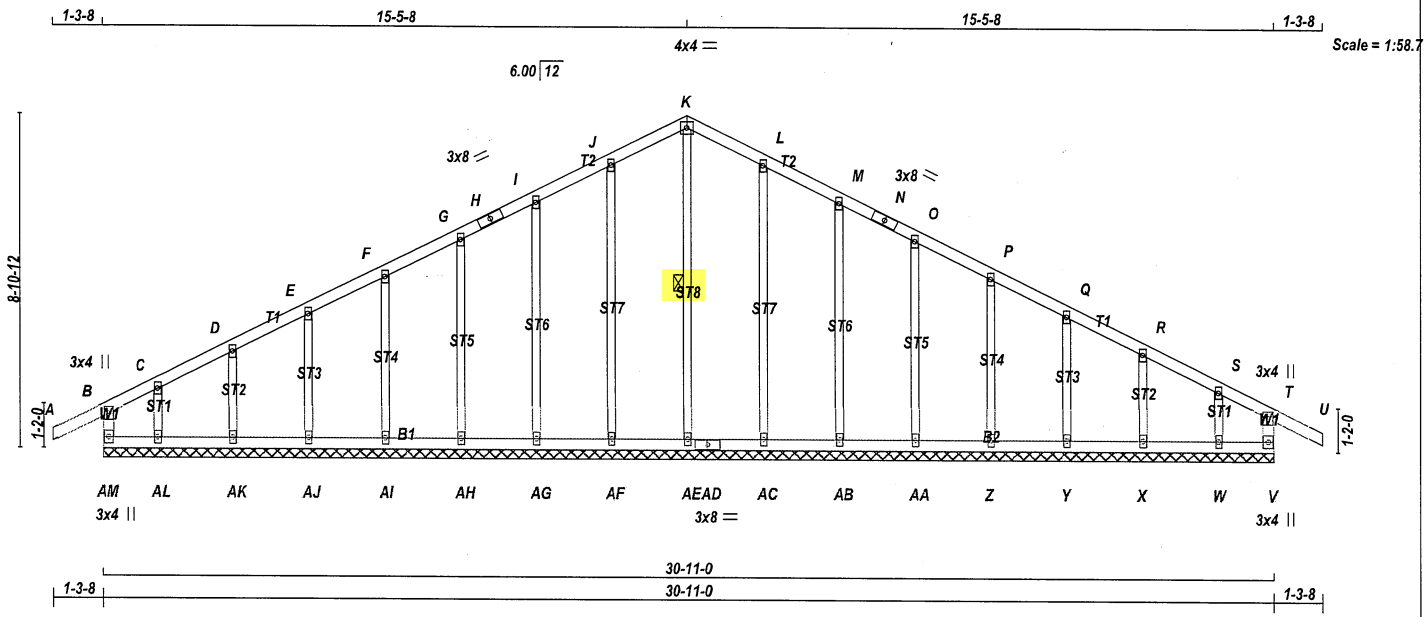

TOTAL WEIGHT = 136 lb

LUMBER
N. L. G. A. RULES

CHORDS	SIZE		LUMBER	DESCR.
AM- B	2x4	DRY	No.2	SPF
A - H	2x4	DRY	No.2	SPF
H - K	2x4	DRY	No.2	SPF
K - N	2x4	DRY	No.2	SPF
N - U	2x4	DRY	No.2	SPF
V - T	2x4	DRY	No.2	SPF
AM- AD	2x4	DRY	No.2	SPF
AD- V	2x4	DRY	No.2	SPF
ALL WEBS	2x3	DRY	No.2	SPF
ALL GABLE WEBS	2x3	DRY	No.2	SPF

DRY: SEASONED LUMBER.

GABLE STUDS SPACED AT 2-0-0 OC.

PLATES (table is in inches)

JT	TYPE	PLATES	W	LEN	Y	X
B	TMV+p	MT20	3.0	4.0		
C, D, E, F, G, I, J, L, M, O, P, Q, R, S						
C	TMW+w	MT20	2.0	4.0		
H	TS-t	MT20	3.0	8.0		
K	TTW-p	MT20	4.0	4.0		
N	TS-t	MT20	3.0	8.0		
T	TMV+p	MT20	3.0	4.0		
V	BMV1+p	MT20	3.0	4.0		
W, X, Y, Z, AA, AB, AC, AE, AF, AG, AH, AI, AJ, AK, AL						
W	BMW1+w	MT20	2.0	4.0		
AD	BS-t	MT20	3.0	8.0		
AM	BMV1+p	MT20	3.0	4.0		

NOTES- (1)
1) Lateral braces to be a minimum of 2X4 SPF #2.

LICENSED PROFESSIONAL ENGINEER
06-24-22
H. J. G. ALVES
100090242
PROVINCE OF ONTARIO

Structural component only
DWG# T-2215298

DIMENSIONS, SUPPORTS AND LOADINGS SPECIFIED BY FABRICATOR TO BE VERIFIED BY BUILDING DESIGNER

BEARINGS

THIS TRUSS DESIGNED FOR CONTINUOUS BEARINGS.

THIS TRUSS REQUIRES RIGID SHEATHING ON EXPOSED FACE.

BEARING MATERIAL TO BE SPF NO.2 OR BETTER AT JOINT(S)

BRACING
TOP CHORD TO BE SHEATHED OR MAX. PURLIN SPACING = 6.25 FT.
MAX. UNBRACED BOTTOM CHORD LENGTH = 6.25 FT OR RIGID CEILING DIRECTLY APPLIED.

ALL PITCH BREAKS AND PERIMETER CORNER JOINTS MUST BE LATERALLY RESTRAINED.

1 LATERAL BRACE(S) AT 1/ 2 LENGTH OF K-AE.

END VERTICAL(S) MUST BE SHEATHED OR HAVE BRACES AS INDICATED IN THE MAX. UNBRACED LENGTH COLUMN OF THE TABLE BELOW

LOADING
TOTAL LOAD CASES: (4)

CHORDS

MEMB. FR-TO	MAX. FACTORED FORCE (LBS)	FACTORED VERT. LOAD LC1 (PLF) FROM	TO	MAX CSI (LC)	MAX. UNBRAC LENGTH
AM- B	-271 / 0	0.0	0.0	0.04 (1)	7.81
A- B	0 / 34	-112.4	-112.4	0.15 (1)	10.00
B- C	-12 / 0	-112.4	-112.4	0.10 (1)	6.25
C- D	0 / 18	-112.4	-112.4	0.06 (1)	10.00
D- E	0 / 18	-112.4	-112.4	0.06 (1)	10.00
E- F	0 / 24	-112.4	-112.4	0.06 (1)	10.00
F- G	0 / 28	-112.4	-112.4	0.06 (1)	10.00
G- H	0 / 31	-112.4	-112.4	0.06 (1)	10.00
H- I	0 / 31	-112.4	-112.4	0.06 (1)	10.00
I- J	0 / 34	-112.4	-112.4	0.06 (1)	10.00
J- K	0 / 35	-112.4	-112.4	0.06 (1)	10.00
K- L	0 / 35	-112.4	-112.4	0.06 (1)	10.00
L- M	0 / 34	-112.4	-112.4	0.06 (1)	10.00
M- N	0 / 31	-112.4	-112.4	0.06 (1)	10.00
N- O	0 / 31	-112.4	-112.4	0.06 (1)	10.00
O- P	0 / 28	-112.4	-112.4	0.06 (1)	10.00
P- Q	0 / 24	-112.4	-112.4	0.06 (1)	10.00
Q- R	0 / 18	-112.4	-112.4	0.06 (1)	10.00
R- S	0 / 18	-112.4	-112.4	0.06 (1)	10.00
S- T	-12 / 0	-112.4	-112.4	0.10 (1)	6.25
T- U	0 / 34	-112.4	-112.4	0.15 (1)	10.00
V- T	-271 / 0	0.0	0.0	0.04 (1)	7.81
AM-AL	-6 / 0	-18.5	-18.5	0.03 (1)	10.00
AL-AK	-12 / 0	-18.5	-18.5	0.02 (4)	6.25
AK-AJ	-18 / 0	-18.5	-18.5	0.02 (4)	6.25
AJ-AI	-22 / 0	-18.5	-18.5	0.01 (4)	6.25
AI-AH	-25 / 0	-18.5	-18.5	0.01 (4)	6.25
AH-AG	-27 / 0	-18.5	-18.5	0.01 (4)	6.25
AG-AF	-30 / 0	-18.5	-18.5	0.01 (4)	6.25
AF-AE	-32 / 0	-18.5	-18.5	0.01 (4)	6.25
AE-AD	-32 / 0	-18.5	-18.5	0.01 (4)	6.25
AD-AC	-32 / 0	-18.5	-18.5	0.01 (4)	6.25
AC-AB	-30 / 0	-18.5	-18.5	0.01 (4)	6.25
AB-AA	-27 / 0	-18.5	-18.5	0.01 (4)	6.25
AA- Z	-25 / 0	-18.5	-18.5	0.01 (4)	6.25
Z- Y	-22 / 0	-18.5	-18.5	0.01 (4)	6.25
Y- X	-18 / 0	-18.5	-18.5	0.02 (4)	6.25
X- W	-12 / 0	-18.5	-18.5	0.02 (4)	6.25
W- V	-6 / 0	-18.5	-18.5	0.03 (1)	10.00

WEBS

MEMB. FR-TO	MAX. FACTORED FORCE (LBS)	MAX CSI (LC)
AE- K	-260 / 0	0.13 (1)
AF- J	-231 / 0	0.27 (1)
AG- I	-222 / 0	0.18 (1)
AH- G	-224 / 0	0.12 (1)
AI- F	-224 / 0	0.08 (1)
AJ- E	-220 / 0	0.05 (1)
AK- D	-237 / 0	0.04 (1)
AL- C	-133 / 0	0.02 (1)
AC- L	-231 / 0	0.27 (1)
AB- M	-222 / 0	0.18 (1)
AA- O	-224 / 0	0.12 (1)
Z- P	-224 / 0	0.08 (1)
Y- Q	-220 / 0	0.05 (1)
X- R	-237 / 0	0.04 (1)
W- S	-133 / 0	0.02 (1)

[M]

DESIGN CRITERIA

SPECIFIED LOADS:

TOP CH.	LL	=	32.5	PSF
	DL	=	6.0	PSF
BOT CH.	LL	=	0.0	PSF
	DL	=	7.4	PSF
TOTAL LOAD		=	45.9	PSF

SPACING = 24.0 IN. C/C

THIS TRUSS IS DESIGNED FOR RESIDENTIAL OR SMALL BUILDING REQUIREMENTS OF PART 9, NBCC 2015

THIS DESIGN COMPLIES WITH:
- PART 9 OF BCBC 2018 , ABC 2019
- PART 9 OF OBC 2012 (2019 AMENDMENT)
- CSA 086-14
- TPIC 2014

DESIGN ASSUMPTIONS
-OVERHANG NOT TO BE ALTERED OR CUT OFF.

(55 % OF 43.9 P.S.F. G.S.L. PLUS 8.4 P.S.F. RAIN LOAD) EQUALS 32.5 P.S.F. SPECIFIED ROOF LIVE LOAD

CSI: TC=0.15/1.00 (A-B:1) , BC=0.03/1.00 (AL-AM:1) , WB=0.27/1.00 (L-AC:1) , SSI=0.11/1.00 (A-B:1)

DOL LUMBER=1.00 NAIL=1.00 LS BEND=1.10 COMP=1.10 SHEAR=1.10 TENS= 1.10

COMPANION LIVE LOAD FACTOR = 1.00

TRUSS PLATE MANUFACTURER IS NOT RESPONSIBLE FOR QUALITY CONTROL IN THE TRUSS MANUFACTURING PLANT .

NAIL VALUES

PLATE	GRIP(DRY) (PSI) MAX	MIN	SHEAR (PLI) MAX	MIN	SECTION (PLI) MAX	MIN
MT20	650	371	1747	788	1987	1873

PLATE PLACEMENT TOL. = 0.250 inches

PLATE ROTATION TOL. = 5.0 Deg.

JSI GRIP= 0.39 (K) (INPUT = 0.90)
JSI METAL= 0.10 (R) (INPUT = 1.00)

REVIEWED

JOB NAME	TRUSS NAME	QUANTITY	PLY	JOB DESC.	DRWG NO.
423610	T6C	1	1	BAYVIEW WELLINGTON TRUSS DESC.	

Tamarack Roof Truss, Burlington

Version 8.530 S Feb 23 2022 MiTek Industries, Inc. Fri Jun 24 13:52:24 2022 Page 1
ID:c3jyj23uDijq_8pvRKbkZpy75XW-YlEVRj1IErIRdbMqT?IjMq9xu62NGRz9BqURdCz33ab

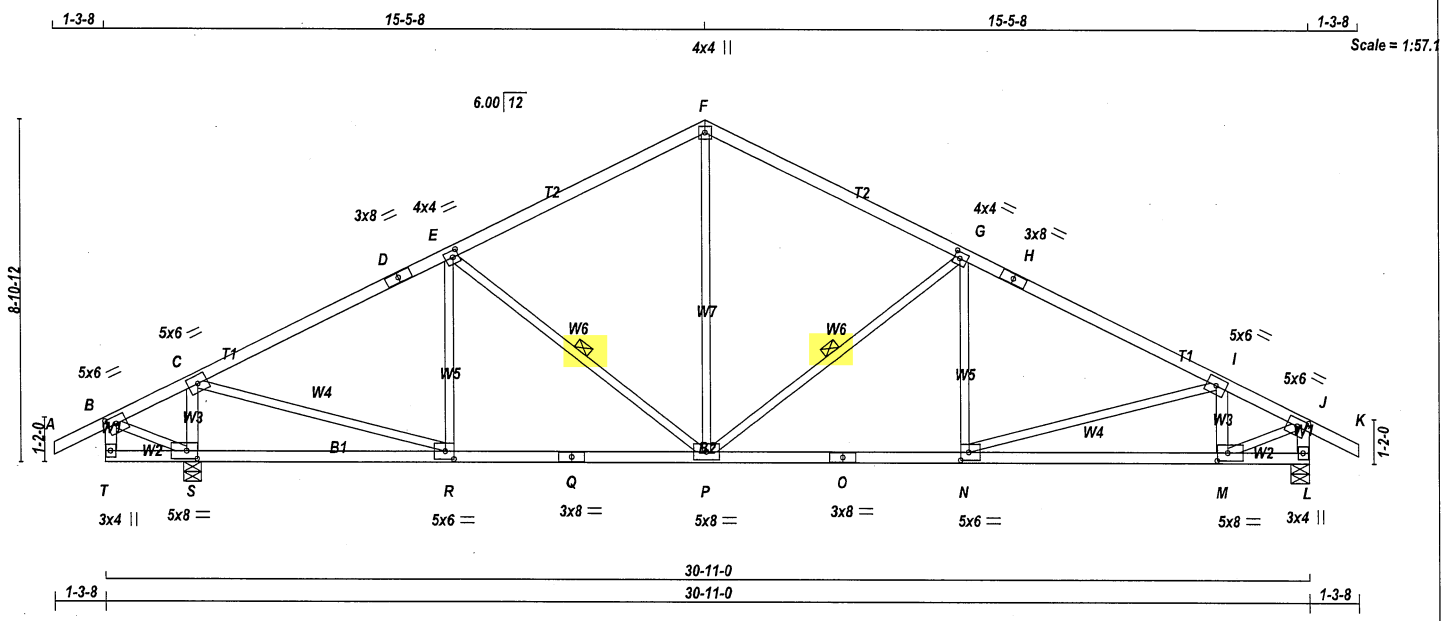

TOTAL WEIGHT = 126 lb

[M][F]

LUMBER

N. L. G. A. RULES

CHORDS	SIZE		LUMBER	DESCR.
A - D	2x4	DRY	No.2	SPF
D - F	2x4	DRY	No.2	SPF
F - H	2x4	DRY	No.2	SPF
H - K	2x4	DRY	No.2	SPF
T - B	2x4	DRY	No.2	SPF
L - J	2x4	DRY	No.2	SPF
T - Q	2x4	DRY	No.2	SPF
Q - O	2x4	DRY	No.2	SPF
O - L	2x4	DRY	No.2	SPF
ALL WEBS	2x3	DRY	No.2	SPF
EXCEPT				
M - I	2x4	DRY	No.2	SPF
S - C	2x4	DRY	No.2	SPF

DRY: SEASONED LUMBER.

PLATES (table is in inches)

JT	TYPE	PLATES	W	LEN	Y	X
B	TMVW-t	MT20	5.0	6.0	2.25	2.75
C	TMWW-t	MT20	5.0	6.0		
D	TS-t	MT20	3.0	8.0		
E	TMWW-t	MT20	4.0	4.0	2.00	1.75
F	TTW+p	MT20	4.0	4.0		
G	TMWW-t	MT20	4.0	4.0	2.00	1.75
H	TS-t	MT20	3.0	8.0		
I	TMWW-t	MT20	5.0	6.0		
J	TMVW-t	MT20	5.0	6.0	2.25	2.75
L	BMV1+p	MT20	3.0	4.0		
M	BMWW-t	MT20	5.0	8.0	2.50	3.25
N	BMWW-t	MT20	5.0	6.0	2.50	2.50
O	BS-t	MT20	3.0	8.0		
P	BMWWW-t	MT20	5.0	8.0		
Q	BS-t	MT20	3.0	8.0		
R	BMWW-t	MT20	5.0	6.0	2.50	2.50
S	BMWW1-t	MT20	5.0	8.0	2.50	3.25
T	BMV+p	MT20	3.0	4.0		

NOTES- (1)
1) Lateral braces to be a minimum of 2X4 SPF #2.

LICENSED PROFESSIONAL ENGINEER
06-24-22
H. J. G. ALVES
100009024
PROVINCE OF ONTARIO

Structural component only
DWG# T-2215277

DIMENSIONS, SUPPORTS AND LOADINGS SPECIFIED BY FABRICATOR TO BE VERIFIED BY BUILDING DESIGNER

BEARINGS

JT	FACTORED GROSS REACTION VERT	HORZ	MAXIMUM FACTORED GROSS REACTION DOWN	HORZ	UPLIFT	INPUT BRG IN-SX	REQRD BRG IN-SX
S	2346	0	2346	0	0	5-8	5-8
L	2007	0	2007	0	0	5-8	5-8

UNFACTORED REACTIONS

JT	1ST LCASE COMBINED	MAX./MIN. COMPONENT REACTIONS SNOW	LIVE	PERM.LIVE	WIND	DEAD	SOIL
S	1641	1177 / 0	0 / 0	0 / 0	0 / 0	464 / 0	0 / 0
L	1404	1007 / 0	0 / 0	0 / 0	0 / 0	397 / 0	0 / 0

BEARING MATERIAL TO BE SPF NO.2 OR BETTER AT JOINT(S) S, L

BRACING

TOP CHORD TO BE SHEATHED OR MAX. PURLIN SPACING = 3.56 FT.
MAX. UNBRACED BOTTOM CHORD LENGTH = 6.25 FT OR RIGID CEILING DIRECTLY APPLIED.

ALL PITCH BREAKS AND PERIMETER CORNER JOINTS MUST BE LATERALLY RESTRAINED.

1 LATERAL BRACE(S) AT 1/ 2 LENGTH OF G-P, E-P.

END VERTICAL(S) MUST BE SHEATHED OR HAVE BRACES AS INDICATED IN THE MAX. UNBRACED LENGTH COLUMN OF THE TABLE BELOW

LOADING

TOTAL LOAD CASES: (4)

CHORDS

MEMB. FR-TO	MAX. FACTORED FORCE (LBS)	FACTORED VERT. LOAD LC1 (PLF) FROM	TO	MAX CSI (LC)	MAX. UNBRAC LENGTH
A- B	0 / 34	-112.4	-112.4	0.15 (1)	10.00
B- C	0 / 213	-112.4	-112.4	0.45 (1)	10.00
C- D	-2021 / 0	-112.4	-112.4	0.65 (1)	4.00
D- E	-2021 / 0	-112.4	-112.4	0.65 (1)	4.00
E- F	-1741 / 0	-112.4	-112.4	0.66 (1)	4.20
F- G	-1742 / 0	-112.4	-112.4	0.67 (1)	4.18
G- H	-2497 / 0	-112.4	-112.4	0.73 (1)	3.56
H- I	-2497 / 0	-112.4	-112.4	0.73 (1)	3.56
I- J	-2263 / 0	-112.4	-112.4	0.32 (1)	4.24
J- K	0 / 34	-112.4	-112.4	0.15 (1)	10.00
T- B	-22 / 0	0.0	0.0	0.00 (1)	7.81
L- J	-1997 / 0	0.0	0.0	0.20 (1)	5.97
T- S	0 / 0	-18.5	-18.5	0.14 (4)	10.00
S- R	-136 / 0	-18.5	-18.5	0.12 (4)	6.25
R- Q	0 / 1820	-18.5	-18.5	0.39 (1)	10.00
Q- P	0 / 1820	-18.5	-18.5	0.39 (1)	10.00
P- O	0 / 2251	-18.5	-18.5	0.46 (1)	10.00
O- N	0 / 2251	-18.5	-18.5	0.46 (1)	10.00
N- M	0 / 2069	-18.5	-18.5	0.42 (1)	10.00
M- L	0 / 0	-18.5	-18.5	0.10 (4)	10.00

WEBS

MEMB. FR-TO	MAX. FACTORED FORCE (LBS)	MAX CSI (LC)
P- F	0 / 942	0.21 (1)
P- G	-928 / 0	0.45 (1)
N- G	0 / 127	0.04 (4)
N- I	0 / 190	0.04 (1)
M- I	-709 / 0	0.08 (1)
E- P	-377 / 0	0.18 (1)
R- E	-472 / 0	0.22 (1)
C- R	0 / 2041	0.46 (1)
S- C	-2162 / 0	0.24 (1)
B- S	-145 / 0	0.02 (1)
M- J	0 / 2216	0.50 (1)

DESIGN CRITERIA

SPECIFIED LOADS:

TOP CH.	LL	=	32.5	PSF
	DL	=	6.0	PSF
BOT CH.	LL	=	0.0	PSF
	DL	=	7.4	PSF
TOTAL LOAD		=	45.9	PSF

SPACING = 24.0 IN. C/C

THIS TRUSS IS DESIGNED FOR RESIDENTIAL OR SMALL BUILDING REQUIREMENTS OF PART 9, NBCC 2015

THIS DESIGN COMPLIES WITH:
- PART 9 OF BCBC 2018 , ABC 2019
- PART 9 OF OBC 2012 (2019 AMENDMENT)
- CSA 086-14
- TPIC 2014

(55 % OF 43.9 P.S.F. G.S.L. PLUS 8.4 P.S.F. RAIN LOAD) EQUALS 32.5 P.S.F. SPECIFIED ROOF LIVE LOAD

ALLOWABLE DEFL.(LL)= L/360 (0.96")
CALCULATED VERT. DEFL.(LL) = L/ 999 (0.09")
ALLOWABLE DEFL.(TL)= L/360 (0.96")
CALCULATED VERT. DEFL.(TL) = L/ 999 (0.18")

CANTILEVER DEFLECTION:
ALLOWABLE DEFL.(LL)= L/120 (0.22")
CALCULATED VERT. DEFL.(LL) = L/ 999 (0.00")
ALLOWABLE DEFL.(TL)= L/120 (0.22")
CALCULATED VERT. DEFL.(TL) = L/ 999 (0.01")

CSI: TC=0.73/1.00 (G-I:1) , BC=0.46/1.00 (N-P:1) , WB=0.50/1.00 (J-M:1) , SSI=0.32/1.00 (F-G:1)

DOL LUMBER=1.00 NAIL=1.00 LS BEND=1.10 COMP=1.10 SHEAR=1.10 TENS= 1.10

COMPANION LIVE LOAD FACTOR = 1.00

TRUSS PLATE MANUFACTURER IS NOT RESPONSIBLE FOR QUALITY CONTROL IN THE TRUSS MANUFACTURING PLANT .

NAIL VALUES

PLATE	GRIP(DRY) (PSI) MAX	MIN	SHEAR (PLI) MAX	MIN	SECTION (PLI) MAX	MIN
MT20	650	371	1747	788	1987	1873

PLATE PLACEMENT TOL. = 0.250 inches

PLATE ROTATION TOL. = 5.0 Deg.

JSI GRIP= 0.88 (I) (INPUT = 0.90)
JSI METAL= 0.72 (Q) (INPUT = 1.00)

REVIEWED

JOB NAME	TRUSS NAME	QUANTITY	PLY	JOB DESC.	DRWG NO.
423610	T7	1	2	BAYVIEW WELLINGTON TRUSS DESC.	

Tamarack Roof Truss, Burlington

Version 8.530 S Feb 23 2022 MiTek Industries, Inc. Fri Jun 24 13:52:25 2022 Page 1

ID:c3jyj23uDijq_8pvRKbkZpy75XW-0yote32N_8QHFlx11jpyv2i7MWM_?r6JQUD?Aez33aa

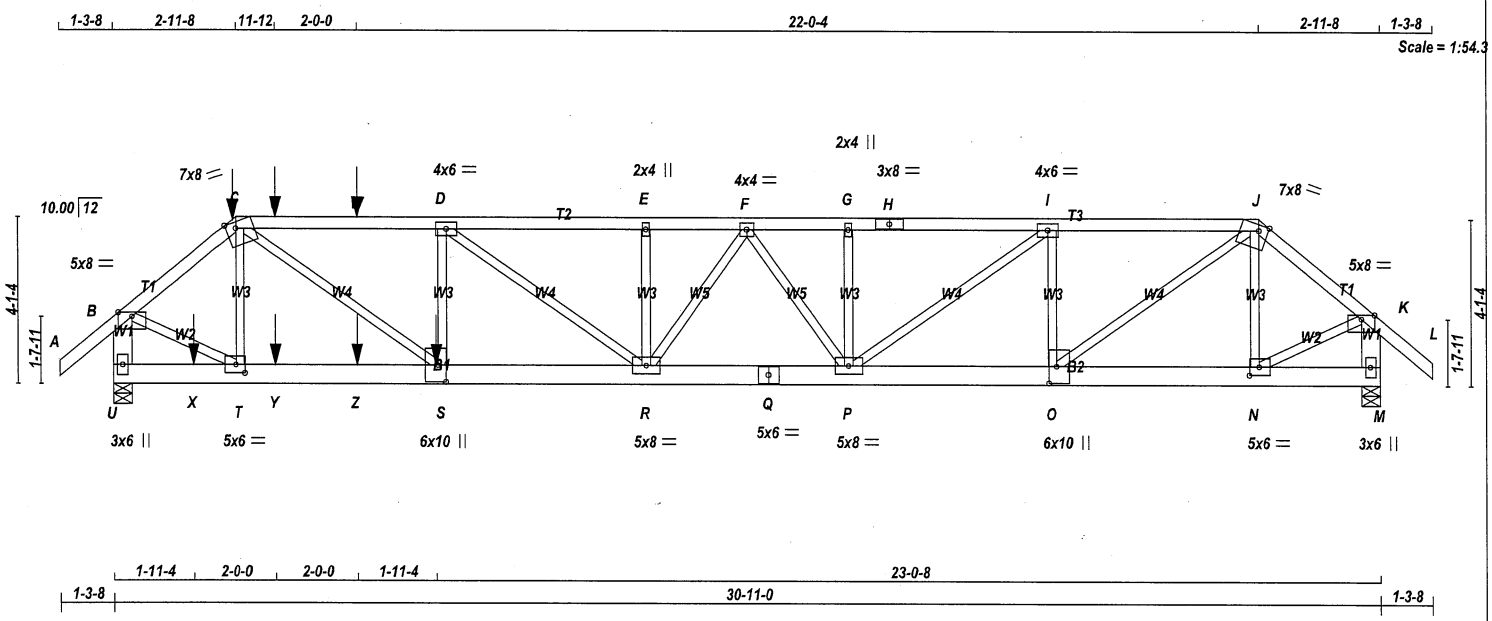

TOTAL WEIGHT = 2 X 148 = 296 lb

LUMBER

N. L. G. A. RULES

CHORDS	SIZE		LUMBER	DESCR.
A - C	2x4	DRY	No.2	SPF
C - H	2x4	DRY	No.2	SPF
H - J	2x4	DRY	No.2	SPF
J - L	2x4	DRY	No.2	SPF
U - B	2x6	DRY	No.2	SPF
M - K	2x6	DRY	No.2	SPF
U - Q	2x6	DRY	No.2	SPF
Q - M	2x6	DRY	No.2	SPF
ALL WEBS EXCEPT	2x3	DRY	No.2	SPF

DRY: SEASONED LUMBER.

DESIGN CONSISTS OF 2 TRUSSES BUILT SEPARATELY THEN FASTENED TOGETHER AS FOLLOWS:

CHORDS	#ROWS	SURFACE SPACING (IN)	LOAD(PLF)
TOP CHORDS : (0.122"X3") SPIRAL NAILS			
A- C	1	12	SIDE(61.0)
C- H	1	12	SIDE(61.0)
H- J	1	12	TOP
J- L	1	12	TOP
U- B	2	12	TOP
M- K	2	12	TOP
BOTTOM CHORDS : (0.122"X3") SPIRAL NAILS			
U- Q	2	12	SIDE(183.1)
Q- M	2	12	TOP
WEBS : (0.122"X3") SPIRAL NAILS			
2x3	1	6	
D- S	1	3	SIDE(534.9)
I- O	1	3	

NAILS TO BE DRIVEN FROM ONE SIDE ONLY.

GIRDER NAILING ASSUMES NAILED HANGERS ARE FASTENED WITH MIN. 3-0 INCH NAILS.

TOP - COMPONENTS ARE LOADED FROM THE TOP AND MUST BE PLACED ON TOP EDGE OF ALL PLIES FOR THE LOAD TO BE TRANSFERRED TO EACH PLY.

LICENSED PROFESSIONAL ENGINEER
06-24-22
H. J. G. ALVES
100009024
PROVINCE OF ONTARIO

Structural component only
DWG# T-2215278

DIMENSIONS, SUPPORTS AND LOADINGS SPECIFIED BY FABRICATOR TO BE VERIFIED BY BUILDING DESIGNER

BEARINGS

JT	FACTORED GROSS REACTION VERT	HORZ	MAXIMUM FACTORED GROSS REACTION DOWN	HORZ	UPLIFT	INPUT BRG IN-SX	REQRD BRG IN-SX
U	4765	0	4765	0	0	5-8	5-8
M	2974	0	2974	0	0	5-8	5-8

UNFACTORED REACTIONS

JT	1ST LCASE COMBINED	MAX./MIN. COMPONENT REACTIONS SNOW	LIVE	PERM.LIVE	WIND	DEAD	SOIL
U	3330	2412 / 0	0 / 0	0 / 0	0 / 0	917 / 0	0 / 0
M	2079	1499 / 0	0 / 0	0 / 0	0 / 0	579 / 0	0 / 0

BEARING MATERIAL TO BE SPF NO.2 OR BETTER AT JOINT(S) U, M

BRACING

TOP CHORD TO BE SHEATHED OR MAX. PURLIN SPACING = 2.93 FT.
MAX. UNBRACED BOTTOM CHORD LENGTH = 10.00 FT OR RIGID CEILING DIRECTLY APPLIED.

ALL PITCH BREAKS AND PERIMETER CORNER JOINTS MUST BE LATERALLY RESTRAINED.

LOADING

TOTAL LOAD CASES: (4)

CHORDS

MEMB. FR-TO	MAX. FACTORED FORCE (LBS)	FACTORED VERT. LOAD (PLF) FROM	TO	LC1	MAX CSI (LC)	MAX. UNBRAC LENGTH
A- B	0 / 50	-112.4	-112.4	0.09 (1)	10.00	
B- C	-4712 / 0	-112.4	-112.4	0.18 (1)	4.30	
C- V	-8123 / 0	-112.4	-112.4	0.68 (1)	2.93	
V- W	-8123 / 0	-112.4	-112.4	0.68 (1)	2.93	
W- D	-8123 / 0	-112.4	-112.4	0.68 (1)	2.93	
D- E	-7920 / 0	-112.4	-112.4	0.62 (1)	3.03	
E- F	-7920 / 0	-112.4	-112.4	0.29 (1)	3.31	
F- G	-6849 / 0	-112.4	-112.4	0.25 (1)	3.58	
G- H	-6849 / 0	-112.4	-112.4	0.48 (1)	3.39	
H- I	-6849 / 0	-112.4	-112.4	0.48 (1)	3.39	
I- J	-4996 / 0	-112.4	-112.4	0.37 (1)	4.02	
J- K	-2796 / 0	-112.4	-112.4	0.12 (1)	5.36	
K- L	0 / 50	-112.4	-112.4	0.09 (1)	10.00	
U- B	-4791 / 0	0.0	0.0	0.18 (1)	6.62	
M- K	-2974 / 0	0.0	0.0	0.11 (1)	7.81	
U- X	0 / 0	-18.5	-18.5	0.07 (1)	10.00	
X- T	0 / 0	-18.5	-18.5	0.07 (1)	10.00	
T- Y	0 / 3574	-18.5	-18.5	0.33 (1)	10.00	
Y- Z	0 / 3574	-18.5	-18.5	0.33 (1)	10.00	
Z- S	0 / 3574	-18.5	-18.5	0.33 (1)	10.00	
S- R	0 / 8123	-18.5	-18.5	0.63 (1)	10.00	
R- Q	0 / 7456	-18.5	-18.5	0.53 (1)	10.00	
Q- P	0 / 7456	-18.5	-18.5	0.53 (1)	10.00	
P- O	0 / 4997	-18.5	-18.5	0.38 (1)	10.00	
O- N	0 / 2120	-18.5	-18.5	0.17 (1)	10.00	
N- M	0 / 0	-18.5	-18.5	0.03 (1)	10.00	

WEBS

MEMB. FR-TO	MAX. FACTORED FORCE (LBS)	MAX CSI (LC)
T- C	-1157 / 0	0.15 (1)
C- S	0 / 5638	0.70 (1)
S- D	-607 / 0	0.08 (1)
D- R	-253 / 0	0.09 (1)
R- E	-391 / 0	0.05 (1)
P- G	-417 / 0	0.05 (1)
P- I	0 / 2317	0.29 (1)
O- I	-2030 / 0	0.26 (1)
O- J	0 / 3565	0.44 (1)
N- J	-722 / 0	0.09 (1)
B- T	0 / 3882	0.48 (1)
N- K	0 / 2304	0.29 (1)
R- F	0 / 839	0.10 (1)
F- P	-1097 / 0	0.19 (1)

SPECIFIED CONCENTRATED LOADS (LBS)

JT	LOC.	LC1	MAX-	MAX+	FACE	DIR.	TYPE	HEEL	CONN.
C	2-11-8	-30	-30	---	FRONT	VERT	DEAD	---	C1
C	2-11-8	-159	-159	---	FRONT	VERT	SNOW	---	C1
S	7-10-8	-1920	-1920	---	BACK	VERT	TOTAL	---	C1
V	3-11-4	-93	-93	---	BACK	VERT	TOTAL	---	C1
W	5-11-4	-93	-93	---	BACK	VERT	TOTAL	---	C1
X	1-11-4	-21	-21	---	BACK	VERT	TOTAL	---	C1
Y	3-11-4	-21	-21	---	BACK	VERT	TOTAL	---	C1
Z	5-11-4	-21	-21	---	BACK	VERT	TOTAL	---	C1

CONNECTION REQUIREMENTS

1) **C1:** A SUITABLE HANGER/MECHANICAL CONNECTION IS REQUIRED.

[M]

DESIGN CRITERIA

*** SPECIAL LOADS ANALYSIS ***
GEOMETRY AND/OR BASIC LOADS CHANGED BY USER.
LOADS WERE DERIVED FROM USER INPUT
NO FURTHER MODIFICATIONS WERE MADE

SPECIFIED LOADS:

TOP CH.	LL	=	32.5	PSF
	DL	=	6.0	PSF
BOT CH.	LL	=	0.0	PSF
	DL	=	7.4	PSF
TOTAL LOAD		=	45.9	PSF

SPACING = 24.0 IN. C/C

LOADING IN FLAT SECTION BASED ON A SLOPE OF 6.00/12

*** NON STANDARD GIRDER ***
ADDT'L USER-DEFINED LOADS APPLIED TO ALL LOAD CASES.

THIS TRUSS IS DESIGNED FOR RESIDENTIAL OR SMALL BUILDING REQUIREMENTS OF PART 9, NBCC 2015

THIS DESIGN COMPLIES WITH:
- PART 9 OF BCBC 2018 , ABC 2019
- PART 9 OF OBC 2012 (2019 AMENDMENT)
- CSA 086-14
- TPIC 2014

(55 % OF 43.9 P.S.F. G.S.L. PLUS 8.4 P.S.F. RAIN LOAD) EQUALS 32.5 P.S.F. SPECIFIED ROOF LIVE LOAD

ALLOWABLE DEFL.(LL)= L/360 (1.03")
CALCULATED VERT. DEFL.(LL) = L/ 999 (0.21")
ALLOWABLE DEFL.(TL)= L/360 (1.03")
CALCULATED VERT. DEFL.(TL) = L/ 999 (0.35")

CSI: TC=0.68/1.00 (C-D:1) , BC=0.63/1.00 (R-S:1) , WB=0.70/1.00 (C-S:1) , SSI=0.20/1.00 (C-D:1)

DOL LUMBER=1.00 NAIL=1.00 LS BEND=1.00 COMP=1.00 SHEAR=1.00 TENS= 1.00

COMPANION LIVE LOAD FACTOR = 1.00

AUTOSOLVE HEELS OFF

TRUSS PLATE MANUFACTURER IS NOT RESPONSIBLE FOR QUALITY CONTROL IN THE TRUSS MANUFACTURING PLANT .

NAIL VALUES

PLATE	GRIP(DRY) (PSI) MAX	MIN	SHEAR (PLI) MAX	MIN	SECTION (PLI) MAX	MIN
MT20	650	371	1747	788	1987	1873

PLATE PLACEMENT TOL. = 0.250 inches

PLATE ROTATION TOL. = 5.0 Deg.

JSI GRIP= 0.87 (J) (INPUT = 0.90)
JSI METAL= 0.69 (Q) (INPUT = 1.00)

CONTINUED ON PAGE 2

REVIEWED

JOB NAME	TRUSS NAME	QUANTITY	PLY	JOB DESC.	DRWG NO.
423610	T7	1	2	BAYVIEW WELLINGTON TRUSS DESC.	

PLATES (table is in inches)

JT	TYPE	PLATES	W	LEN	Y	X
B	TMVW-p	MT20	5.0	8.0	Edge	
C	TTWW-m	MT20	7.0	8.0	Edge	2.75
D	TMWW-t	MT20	4.0	6.0		
E	TMW+w	MT20	2.0	4.0		
F	TMWW-t	MT20	4.0	4.0		
G	TMW+w	MT20	2.0	4.0		
H	TS-t	MT20	3.0	8.0		
I	TMWW-t	MT20	4.0	6.0		
J	TTWW-m	MT20	7.0	8.0	Edge	2.75
K	TMVW-p	MT20	5.0	8.0	Edge	
M	BMV1+p	MT20	3.0	6.0		
N	BMWW-t	MT20	5.0	6.0	2.50	2.75
O	BMWW+t	MT20	6.0	10.0	5.00	2.25
P	BMWWW-t	MT20	5.0	8.0		
Q	BS-t	MT20	5.0	6.0		
R	BMWWW-t	MT20	5.0	8.0		
S	BMWW+t	MT20	6.0	10.0	5.00	2.25
T	BMWW-t	MT20	5.0	6.0	2.50	2.75
U	BMV1+p	MT20	3.0	6.0		

Edge - INDICATES REFERENCE CORNER OF PLATE TOUCHES EDGE OF CHORD.

NOTES- (1)
1) Lateral braces to be a minimum of 2X4 SPF #2.

CONNECTION REQUIREMENTS

1) **C1:** A SUITABLE HANGER/MECHANICAL CONNECTION IS REQUIRED.

LICENSED PROFESSIONAL ENGINEER
06-24-22
H. J. G. ALVES
100009024
PROVINCE OF ONTARIO

Structural component only
DWG# T-2215278

REVIEWED

JOB NAME	TRUSS NAME	QUANTITY	PLY	JOB DESC.	DRWG NO.
423610	T8	1	1	BAYVIEW WELLINGTON TRUSS DESC.	

Tamarack Roof Truss, Burlington

Version 8.530 S Feb 23 2022 MiTek Industries, Inc. Fri Jun 24 13:52:26 2022 Page 1

ID:c3jyj23uDijq_8pvRKbkZpy75XW-U8LGsP3?ISY8tvWDbQKBRFFG0wirkMvSe8zYi4z33aZ

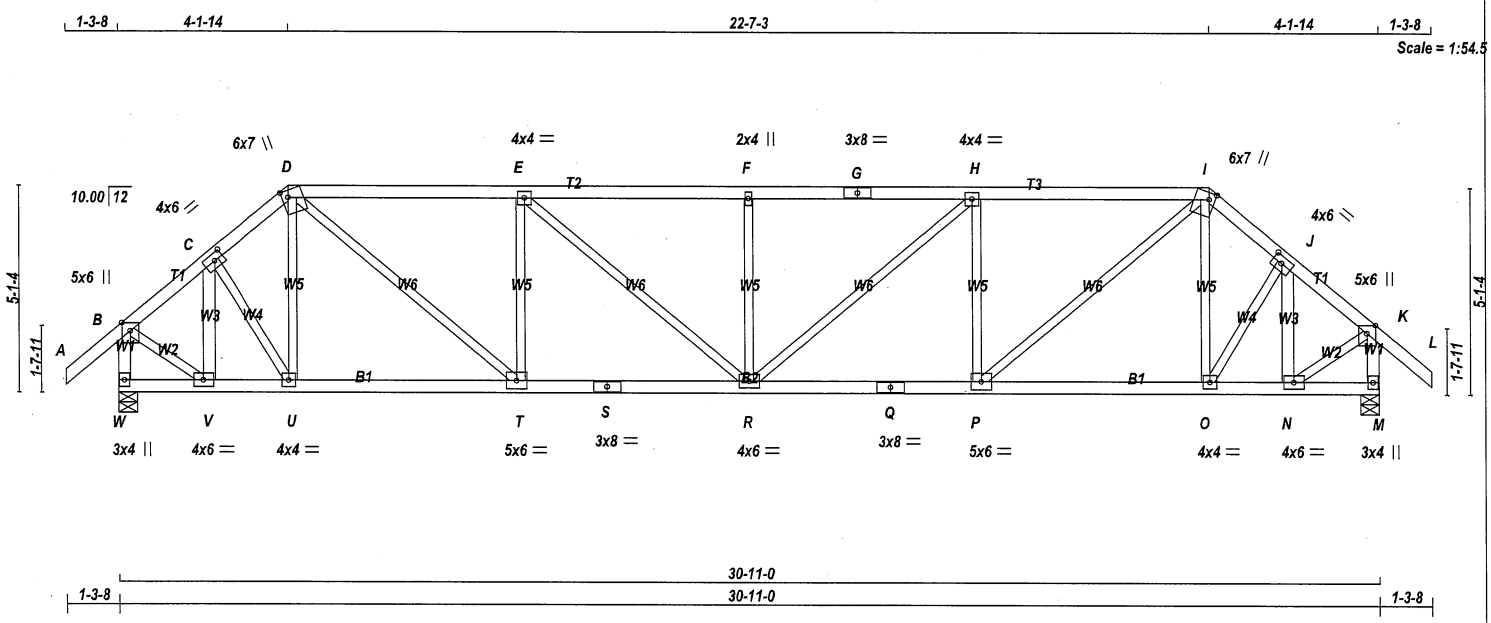

TOTAL WEIGHT = 138 lb

LUMBER

N. L. G. A. RULES

CHORDS	SIZE		LUMBER	DESCR.
A - D	2x4	DRY	No.2	SPF
D - G	2x4	DRY	No.2	SPF
G - I	2x4	DRY	No.2	SPF
I - L	2x4	DRY	No.2	SPF
W - B	2x4	DRY	No.2	SPF
M - K	2x4	DRY	No.2	SPF
W - S	2x4	DRY	No.2	SPF
S - Q	2x4	DRY	No.2	SPF
Q - M	2x4	DRY	No.2	SPF
ALL WEBS EXCEPT	2x3	DRY	No.2	SPF
V - C	2x4	DRY	No.2	SPF
N - J	2x4	DRY	No.2	SPF

DRY: SEASONED LUMBER.

PLATES (table is in inches)

JT	TYPE	PLATES	W	LEN	Y	X
B	TMVW+p	MT20	5.0	6.0	Edge	
C	TMWW-t	MT20	4.0	6.0	2.00	2.75
D	TTWW+m	MT20	6.0	7.0	2.00	1.75
E	TMWW-t	MT20	4.0	4.0		
F	TMW+w	MT20	2.0	4.0		
G	TS-t	MT20	3.0	8.0		
H	TMWW-t	MT20	4.0	4.0		
I	TTWW+m	MT20	6.0	7.0	2.00	1.75
J	TMWW-t	MT20	4.0	6.0	2.00	2.75
K	TMVW+p	MT20	5.0	6.0	Edge	
M	BMV1+p	MT20	3.0	4.0		
N	BMWW-t	MT20	4.0	6.0		
O	BMWW-t	MT20	4.0	4.0		
P	BMWW-t	MT20	5.0	6.0		
Q	BS-t	MT20	3.0	8.0		
R	BMWWW-t	MT20	4.0	6.0		
S	BS-t	MT20	3.0	8.0		
T	BMWW-t	MT20	5.0	6.0		
U	BMWW-t	MT20	4.0	4.0		
V	BMWW-t	MT20	4.0	6.0		
W	BMV1+p	MT20	3.0	4.0		

DIMENSIONS, SUPPORTS AND LOADINGS SPECIFIED BY FABRICATOR TO BE VERIFIED BY BUILDING DESIGNER

BEARINGS

JT	FACTORED GROSS REACTION VERT	HORZ	MAXIMUM FACTORED GROSS REACTION DOWN	HORZ	UPLIFT	INPUT BRG IN-SX	REQRD BRG IN-SX
W	2180	0	2180	0	0	5-8	5-8
M	2180	0	2180	0	0	5-8	5-8

UNFACTORED REACTIONS

JT	1ST LCASE COMBINED	MAX./MIN. COMPONENT REACTIONS SNOW	LIVE	PERM.LIVE	WIND	DEAD	SOIL
W	1525	1094 / 0	0 / 0	0 / 0	0 / 0	431 / 0	0 / 0
M	1525	1094 / 0	0 / 0	0 / 0	0 / 0	431 / 0	0 / 0

BEARING MATERIAL TO BE SPF NO.2 OR BETTER AT JOINT(S) W, M

BRACING

TOP CHORD TO BE SHEATHED OR MAX. PURLIN SPACING = 3.04 FT.
MAX. UNBRACED BOTTOM CHORD LENGTH = 10.00 FT OR RIGID CEILING DIRECTLY APPLIED.

ALL PITCH BREAKS AND PERIMETER CORNER JOINTS MUST BE LATERALLY RESTRAINED.

LOADING

TOTAL LOAD CASES: (4)

CHORDS

MEMB. FR-TO	MAX. FACTORED FORCE (LBS)	FACTORED VERT. LOAD (PLF) FROM	TO	LC1 MAX CSI (LC)	MAX. UNBRAC LENGTH
A- B	0 / 50	-112.4	-112.4	0.15 (1)	10.00
B- C	-1723 / 0	-112.4	-112.4	0.10 (1)	4.99
C- D	-2026 / 0	-112.4	-112.4	0.11 (1)	4.67
D- E	-2908 / 0	-112.4	-112.4	0.76 (1)	3.29
E- F	-3305 / 0	-112.4	-112.4	0.82 (1)	3.04
F- G	-3305 / 0	-112.4	-112.4	0.82 (1)	3.04
G- H	-3305 / 0	-112.4	-112.4	0.82 (1)	3.04
H- I	-2908 / 0	-112.4	-112.4	0.76 (1)	3.29
I- J	-2026 / 0	-112.4	-112.4	0.11 (1)	4.67
J- K	-1723 / 0	-112.4	-112.4	0.10 (1)	4.99
K- L	0 / 50	-112.4	-112.4	0.15 (1)	10.00
W- B	-2152 / 0	0.0	0.0	0.23 (1)	5.78
M- K	-2152 / 0	0.0	0.0	0.23 (1)	5.78
W- V	0 / 0	-18.5	-18.5	0.03 (4)	10.00
V- U	0 / 1334	-18.5	-18.5	0.28 (1)	10.00
U- T	0 / 1531	-18.5	-18.5	0.31 (1)	10.00
T- S	0 / 2909	-18.5	-18.5	0.52 (1)	10.00
S- R	0 / 2909	-18.5	-18.5	0.52 (1)	10.00
R- Q	0 / 2909	-18.5	-18.5	0.52 (1)	10.00
Q- P	0 / 2909	-18.5	-18.5	0.52 (1)	10.00
P- O	0 / 1531	-18.5	-18.5	0.31 (1)	10.00
O- N	0 / 1334	-18.5	-18.5	0.28 (1)	10.00
N- M	0 / 0	-18.5	-18.5	0.03 (4)	10.00

WEBS

MEMB. FR-TO	MAX. FACTORED FORCE (LBS)	MAX CSI (LC)
V- C	-779 / 0	0.12 (1)
C- U	0 / 373	0.08 (1)
U- D	-210 / 0	0.08 (1)
D- T	0 / 1799	0.40 (1)
T- E	-1054 / 0	0.41 (1)
E- R	0 / 523	0.12 (1)
R- F	-580 / 0	0.22 (1)
R- H	0 / 523	0.12 (1)
P- H	-1054 / 0	0.41 (1)
P- I	0 / 1799	0.40 (1)
O- I	-210 / 0	0.08 (1)
O- J	0 / 373	0.08 (1)
N- J	-779 / 0	0.12 (1)
B- V	0 / 1545	0.35 (1)
N- K	0 / 1545	0.35 (1)

DESIGN CRITERIA

SPECIFIED LOADS:

TOP CH.	LL	=	32.5	PSF
	DL	=	6.0	PSF
BOT CH.	LL	=	0.0	PSF
	DL	=	7.4	PSF
TOTAL LOAD		=	45.9	PSF

SPACING = 24.0 IN. C/C

LOADING IN FLAT SECTION BASED ON A SLOPE OF 6.00/12

THIS TRUSS IS DESIGNED FOR RESIDENTIAL OR SMALL BUILDING REQUIREMENTS OF PART 9, NBCC 2015

THIS DESIGN COMPLIES WITH:
- PART 9 OF BCBC 2018 , ABC 2019
- PART 9 OF OBC 2012 (2019 AMENDMENT)
- CSA 086-14
- TPIC 2014

(55 % OF 43.9 P.S.F. G.S.L. PLUS 8.4 P.S.F. RAIN LOAD) EQUALS 32.5 P.S.F. SPECIFIED ROOF LIVE LOAD

ALLOWABLE DEFL.(LL)= L/360 (1.03")
CALCULATED VERT. DEFL.(LL) = L/ 999 (0.17")
ALLOWABLE DEFL.(TL)= L/360 (1.03")
CALCULATED VERT. DEFL.(TL) = L/ 999 (0.29")

CSI: TC=0.82/1.00 (E-F:1) , BC=0.52/1.00 (P-R:1) , WB=0.41/1.00 (E-T:1) , SSI=0.30/1.00 (D-E:1)

DOL LUMBER=1.00 NAIL=1.00 LS BEND=1.10 COMP=1.10 SHEAR=1.10 TENS= 1.10

COMPANION LIVE LOAD FACTOR = 1.00

TRUSS PLATE MANUFACTURER IS NOT RESPONSIBLE FOR QUALITY CONTROL IN THE TRUSS MANUFACTURING PLANT .

NAIL VALUES

PLATE	GRIP(DRY) (PSI) MAX	MIN	SHEAR (PLI) MAX	MIN	SECTION (PLI) MAX	MIN
MT20	650	371	1747	788	1987	1873

PLATE PLACEMENT TOL. = 0.250 inches

PLATE ROTATION TOL. = 5.0 Deg.

JSI GRIP= 0.89 (K) (INPUT = 0.90)
JSI METAL= 0.91 (S) (INPUT = 1.00)

LICENSED PROFESSIONAL ENGINEER
06-24-22
H. J. G. ALVES
100009024
PROVINCE OF ONTARIO

Structural component only
DWG# T-2215279

REVIEWED

CONTINUED ON PAGE 2

JOB NAME	TRUSS NAME	QUANTITY	PLY	JOB DESC. BAYVIEW WELLINGTON	DRWG NO.
423610	T8	1	1	TRUSS DESC.	

Edge - INDICATES REFERENCE CORNER OF PLATE TOUCHES EDGE OF CHORD.

NOTES- (1)
1) Lateral braces to be a minimum of 2X4 SPF #2.

LICENSED PROFESSIONAL ENGINEER
06-24-22
H. J. G. ALVES
100009024
PROVINCE OF ONTARIO

Structural component only
DWG# T-2215279

REVIEWED

JOB NAME	TRUSS NAME	QUANTITY	PLY	JOB DESC.	DRWG NO.
423610	T8C	1	1	BAYVIEW WELLINGTON TRUSS DESC.	

Tamarack Roof Truss, Burlington

Version 8.530 S Feb 23 2022 MiTek Industries, Inc. Fri Jun 24 13:52:27 2022 Page 1
ID:c3jyj23uDijq_8pvRKbkZpy75XW-yKve3l3dWmg?U34P87rQ_TnSzJ3zTo7btoi5EXz33aY

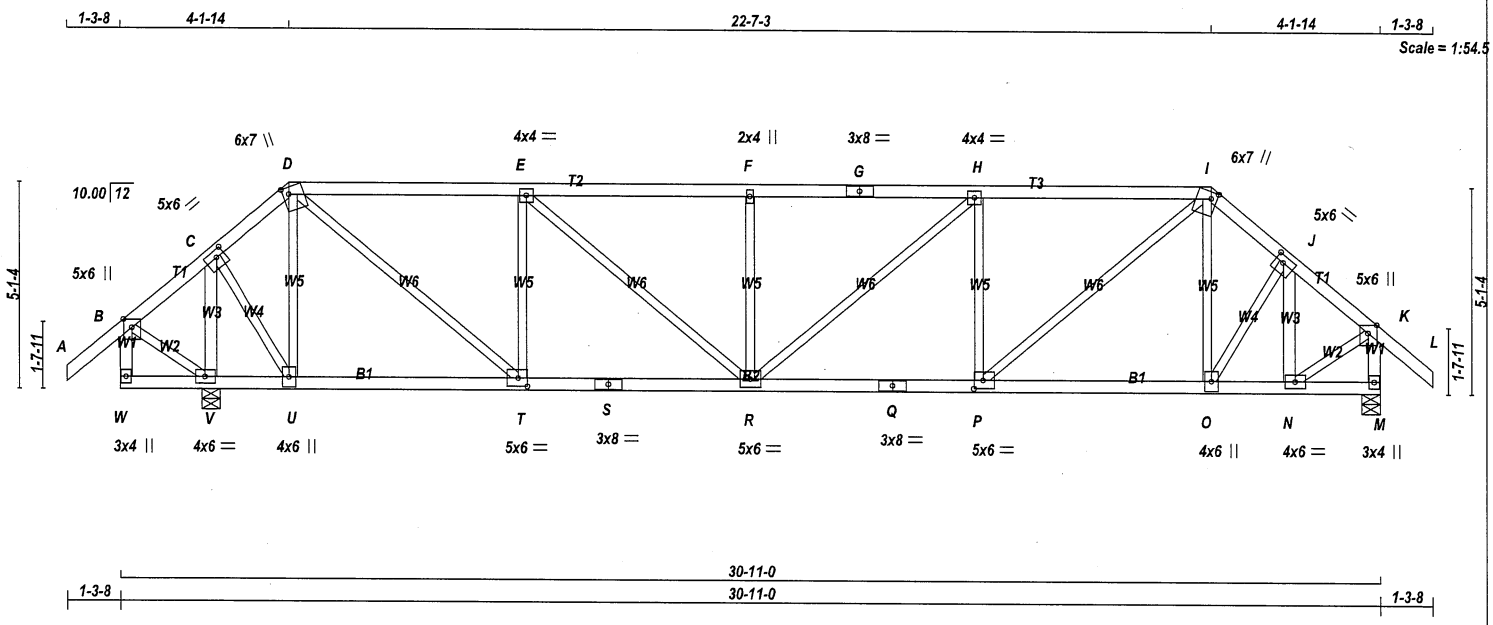

TOTAL WEIGHT = 138 lb

LUMBER
N. L. G. A. RULES

CHORDS	SIZE		LUMBER	DESCR.
A - D	2x4	DRY	No.2	SPF
D - G	2x4	DRY	No.2	SPF
G - I	2x4	DRY	No.2	SPF
I - L	2x4	DRY	No.2	SPF
W - B	2x4	DRY	No.2	SPF
M - K	2x4	DRY	No.2	SPF
W - S	2x4	DRY	No.2	SPF
S - Q	2x4	DRY	No.2	SPF
Q - M	2x4	DRY	No.2	SPF
ALL WEBS EXCEPT	2x3	DRY	No.2	SPF
V - C	2x4	DRY	No.2	SPF
N - J	2x4	DRY	No.2	SPF

DRY: SEASONED LUMBER.

PLATES (table is in inches)

JT	TYPE	PLATES	W	LEN	Y	X
B	TMVW+p	MT20	5.0	6.0	Edge	
C	TMWW-t	MT20	5.0	6.0	2.00	2.50
D	TTWW+m	MT20	6.0	7.0	2.00	1.75
E	TMWW-t	MT20	4.0	4.0		
F	TMW+w	MT20	2.0	4.0		
G	TS-t	MT20	3.0	8.0		
H	TMWW-t	MT20	4.0	4.0		
I	TTWW+m	MT20	6.0	7.0	2.00	1.75
J	TMWW-t	MT20	5.0	6.0	2.00	2.50
K	TMVW+p	MT20	5.0	6.0	Edge	
M	BMV1+p	MT20	3.0	4.0		
N	BMWW-t	MT20	4.0	6.0		
O	BMWW+t	MT20	4.0	6.0		
P	BMWW-t	MT20	5.0	6.0	2.50	2.75
Q	BS-t	MT20	3.0	8.0		
R	BMWWW-t	MT20	5.0	6.0		
S	BS-t	MT20	3.0	8.0		
T	BMWW-t	MT20	5.0	6.0	2.50	2.75
U	BMWW+t	MT20	4.0	6.0		
V	BMWW1-t	MT20	4.0	6.0		
W	BMV+p	MT20	3.0	4.0		

LICENSED PROFESSIONAL ENGINEER
06-24-22
H. J. G. ALVES
100009024
PROVINCE OF ONTARIO

Structural component only
DWG# T-2215280

DIMENSIONS, SUPPORTS AND LOADINGS SPECIFIED BY FABRICATOR TO BE VERIFIED BY BUILDING DESIGNER

BEARINGS

JT	FACTORED GROSS REACTION VERT	HORZ	MAXIMUM FACTORED GROSS REACTION DOWN	HORZ	UPLIFT	INPUT BRG IN-SX	REQRD BRG IN-SX
V	2349	0	2349	0	0	5-8	5-8
M	2010	0	2010	0	0	5-8	5-8

UNFACTORED REACTIONS

JT	1ST LCASE COMBINED	MAX./MIN. COMPONENT REACTIONS SNOW	LIVE	PERM.LIVE	WIND	DEAD	SOIL
V	1643	1179 / 0	0 / 0	0 / 0	0 / 0	464 / 0	0 / 0
M	1406	1009 / 0	0 / 0	0 / 0	0 / 0	397 / 0	0 / 0

BEARING MATERIAL TO BE SPF NO.2 OR BETTER AT JOINT(S) V, M

BRACING
TOP CHORD TO BE SHEATHED OR MAX. PURLIN SPACING = 3.38 FT.
MAX. UNBRACED BOTTOM CHORD LENGTH = 6.25 FT OR RIGID CEILING DIRECTLY APPLIED.

ALL PITCH BREAKS AND PERIMETER CORNER JOINTS MUST BE LATERALLY RESTRAINED.

LOADING
TOTAL LOAD CASES: (4)

CHORDS

MEMB. FR-TO	MAX. FACTORED FORCE (LBS)	FACTORED VERT. LOAD (PLF) FROM	TO	LC1	MAX CSI (LC)	MAX. UNBRAC LENGTH
A- B	0 / 50	-112.4	-112.4	0.15 (1)		10.00
B- C	0 / 244	-112.4	-112.4	0.16 (1)		10.00
C- D	-826 / 0	-112.4	-112.4	0.13 (1)		6.25
D- E	-2169 / 0	-112.4	-112.4	0.67 (1)		3.84
E- F	-2762 / 0	-112.4	-112.4	0.74 (1)		3.38
F- G	-2762 / 0	-112.4	-112.4	0.74 (1)		3.38
G- H	-2762 / 0	-112.4	-112.4	0.74 (1)		3.38
H- I	-2562 / 0	-112.4	-112.4	0.72 (1)		3.53
I- J	-1833 / 0	-112.4	-112.4	0.10 (1)		4.87
J- K	-1568 / 0	-112.4	-112.4	0.09 (1)		5.19
K- L	0 / 50	-112.4	-112.4	0.15 (1)		10.00
W- B	-3 / 16	0.0	0.0	0.00 (4)		7.81
M- K	-1983 / 0	0.0	0.0	0.21 (1)		5.99
W- V	0 / 0	-18.5	-18.5	0.07 (1)		10.00
V- U	-168 / 0	-18.5	-18.5	0.09 (4)		6.25
U- T	0 / 584	-18.5	-18.5	0.16 (4)		10.00
T- S	0 / 2169	-18.5	-18.5	0.40 (1)		10.00
S- R	0 / 2169	-18.5	-18.5	0.40 (1)		10.00
R- Q	0 / 2562	-18.5	-18.5	0.46 (1)		10.00
Q- P	0 / 2562	-18.5	-18.5	0.46 (1)		10.00
P- O	0 / 1384	-18.5	-18.5	0.28 (1)		10.00
O- N	0 / 1215	-18.5	-18.5	0.26 (1)		10.00
N- M	0 / 0	-18.5	-18.5	0.03 (4)		10.00

WEBS

MEMB. FR-TO	MAX. FACTORED FORCE (LBS)	MAX CSI (LC)
V- C	-2180 / 0	0.32 (1)
C- U	0 / 1435	0.32 (1)
U- D	-1144 / 0	0.44 (1)
D- T	0 / 2071	0.47 (1)
T- E	-1227 / 0	0.47 (1)
E- R	0 / 782	0.18 (1)
R- F	-580 / 0	0.22 (1)
R- H	0 / 263	0.06 (1)
P- H	-887 / 0	0.34 (1)
P- I	0 / 1539	0.35 (1)
O- I	-166 / 9	0.06 (1)
O- J	0 / 319	0.07 (1)
N- J	-707 / 0	0.10 (1)
B- V	-194 / 0	0.03 (1)
N- K	0 / 1408	0.32 (1)

DESIGN CRITERIA

SPECIFIED LOADS:

TOP CH.	LL	=	32.5	PSF
	DL	=	6.0	PSF
BOT CH.	LL	=	0.0	PSF
	DL	=	7.4	PSF
TOTAL LOAD		=	45.9	PSF

SPACING = 24.0 IN. C/C

LOADING IN FLAT SECTION BASED ON A SLOPE OF 6.00/12

THIS TRUSS IS DESIGNED FOR RESIDENTIAL OR SMALL BUILDING REQUIREMENTS OF PART 9, NBCC 2015

THIS DESIGN COMPLIES WITH:
- PART 9 OF BCBC 2018 , ABC 2019
- PART 9 OF OBC 2012 (2019 AMENDMENT)
- CSA 086-14
- TPIC 2014

(55 % OF 43.9 P.S.F. G.S.L. PLUS 8.4 P.S.F. RAIN LOAD) EQUALS 32.5 P.S.F. SPECIFIED ROOF LIVE LOAD

ALLOWABLE DEFL.(LL)= L/360 (0.96")
CALCULATED VERT. DEFL.(LL) = L/ 999 (0.13")
ALLOWABLE DEFL.(TL)= L/360 (0.96")
CALCULATED VERT. DEFL.(TL) = L/ 999 (0.24")

CANTILEVER DEFLECTION:
ALLOWABLE DEFL.(LL)= L/120 (0.22")
CALCULATED VERT. DEFL.(LL) = L/ 999 (0.01")
ALLOWABLE DEFL.(TL)= L/120 (0.22")
CALCULATED VERT. DEFL.(TL) = L/ 999 (0.01")

CSI: TC=0.74/1.00 (E-F:1) , BC=0.46/1.00 (P-R:1) , WB=0.47/1.00 (E-T:1) , SSI=0.30/1.00 (D-E:1)

DOL LUMBER=1.00 NAIL=1.00 LS BEND=1.10 COMP=1.10 SHEAR=1.10 TENS= 1.10

COMPANION LIVE LOAD FACTOR = 1.00

TRUSS PLATE MANUFACTURER IS NOT RESPONSIBLE FOR QUALITY CONTROL IN THE TRUSS MANUFACTURING PLANT .

NAIL VALUES

PLATE	GRIP(DRY) (PSI) MAX	MIN	SHEAR (PLI) MAX	MIN	SECTION (PLI) MAX	MIN
MT20	650	371	1747	788	1987	1873

PLATE PLACEMENT TOL. = 0.250 inches

PLATE ROTATION TOL. = 5.0 Deg.

JSI GRIP= 0.89 (T) (INPUT = 0.90)
JSI METAL= 0.81 (S) (INPUT = 1.00)

REVIEWED

CONTINUED ON PAGE 2

JOB NAME	TRUSS NAME	QUANTITY	PLY	JOB DESC.	DRWG NO.
423610	T8C	1	1	BAYVIEW WELLINGTON TRUSS DESC.	

Edge - INDICATES REFERENCE CORNER OF PLATE TOUCHES EDGE OF CHORD.

NOTES- (1)
1) Lateral braces to be a minimum of 2X4 SPF #2.

LICENSED PROFESSIONAL ENGINEER
06-24-22
H. J. G. ALVES
100009024
PROVINCE OF ONTARIO

Structural component only
DWG# T-2215280

REVIEWED

JOB NAME	TRUSS NAME	QUANTITY	PLY	JOB DESC.	DRWG NO.
423610	T9	1	1	BAYVIEW WELLINGTON TRUSS DESC.	

Tamarack Roof Truss, Burlington

Version 8.530 S Feb 23 2022 MiTek Industries, Inc. Fri Jun 24 13:52:28 2022 Page 1

ID:c3jyj23uDijq_8pvRKbkZpy75XW-QWT0G44GH3os6DfbirNfWgKgGjQbCE8l6SSfmzz33aX

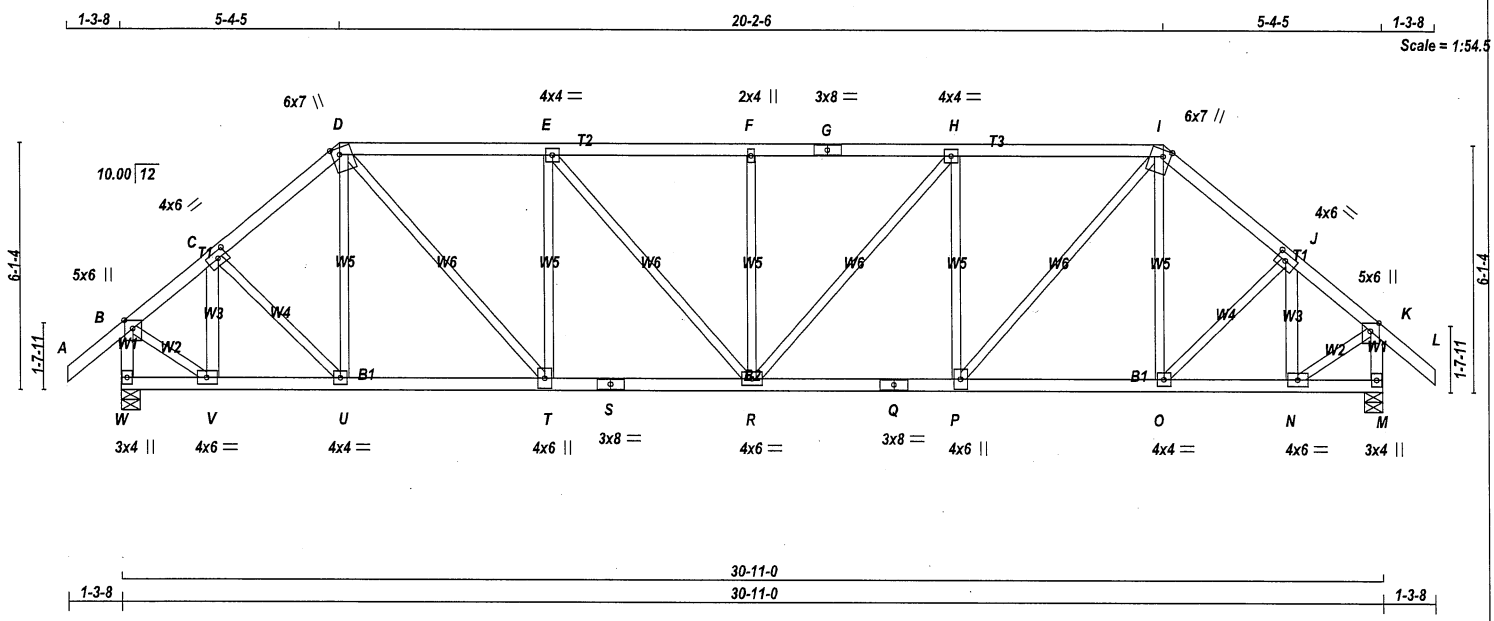

TOTAL WEIGHT = 145 lb

[M]

LUMBER

N. L. G. A. RULES

CHORDS	SIZE		LUMBER	DESCR.
A - D	2x4	DRY	No.2	SPF
D - G	2x4	DRY	No.2	SPF
G - I	2x4	DRY	No.2	SPF
I - L	2x4	DRY	No.2	SPF
W - B	2x4	DRY	No.2	SPF
M - K	2x4	DRY	No.2	SPF
W - S	2x4	DRY	No.2	SPF
S - Q	2x4	DRY	No.2	SPF
Q - M	2x4	DRY	No.2	SPF
ALL WEBS	2x3	DRY	No.2	SPF
EXCEPT				
V - C	2x4	DRY	No.2	SPF
N - J	2x4	DRY	No.2	SPF

DRY: SEASONED LUMBER.

PLATES (table is in inches)

JT	TYPE	PLATES	W	LEN	Y	X
B	TMVW+p	MT20	5.0	6.0	Edge	
C	TMWW-t	MT20	4.0	6.0	2.00	2.75
D	TTWW+m	MT20	6.0	7.0	2.00	2.25
E	TMWW-t	MT20	4.0	4.0		
F	TMW+w	MT20	2.0	4.0		
G	TS-t	MT20	3.0	8.0		
H	TMWW-t	MT20	4.0	4.0		
I	TTWW+m	MT20	6.0	7.0	2.00	2.25
J	TMWW-t	MT20	4.0	6.0	2.00	2.75
K	TMVW+p	MT20	5.0	6.0	Edge	
M	BMV1+p	MT20	3.0	4.0		
N	BMWW-t	MT20	4.0	6.0		
O	BMWW-t	MT20	4.0	4.0		
P	BMWW+t	MT20	4.0	6.0		
Q	BS-t	MT20	3.0	8.0		
R	BMWWW-t	MT20	4.0	6.0		
S	BS-t	MT20	3.0	8.0		
T	BMWW+t	MT20	4.0	6.0		
U	BMWW-t	MT20	4.0	4.0		
V	BMWW-t	MT20	4.0	6.0		
W	BMV1+p	MT20	3.0	4.0		

LICENSED PROFESSIONAL ENGINEER
06-24-22
H. J. G. ALVES
100009024
PROVINCE OF ONTARIO

Structural component only
DWG# T-2215281

DIMENSIONS, SUPPORTS AND LOADINGS SPECIFIED BY FABRICATOR TO BE VERIFIED BY BUILDING DESIGNER

BEARINGS

JT	FACTORED GROSS REACTION VERT	HORZ	MAXIMUM FACTORED GROSS REACTION DOWN	HORZ	UPLIFT	INPUT BRG IN-SX	REQRD BRG IN-SX
W	2180	0	2180	0	0	5-8	5-8
M	2180	0	2180	0	0	5-8	5-8

UNFACTORED REACTIONS

JT	1ST LCASE COMBINED	MAX./MIN. COMPONENT REACTIONS SNOW	LIVE	PERM.LIVE	WIND	DEAD	SOIL
W	1525	1094 / 0	0 / 0	0 / 0	0 / 0	431 / 0	0 / 0
M	1525	1094 / 0	0 / 0	0 / 0	0 / 0	431 / 0	0 / 0

BEARING MATERIAL TO BE SPF NO.2 OR BETTER AT JOINT(S) W, M

BRACING

TOP CHORD TO BE SHEATHED OR MAX. PURLIN SPACING = 3.61 FT.
MAX. UNBRACED BOTTOM CHORD LENGTH = 10.00 FT OR RIGID CEILING DIRECTLY APPLIED.

ALL PITCH BREAKS AND PERIMETER CORNER JOINTS MUST BE LATERALLY RESTRAINED.

LOADING

TOTAL LOAD CASES: (4)

CHORDS

MEMB. FR-TO	MAX. FACTORED FORCE (LBS)	FACTORED VERT. LOAD (PLF) FROM	TO	LC1	MAX CSI (LC)	MAX. UNBRAC LENGTH
A- B	0 / 50	-112.4	-112.4	0.15 (1)	10.00	
B- C	-1732 / 0	-112.4	-112.4	0.16 (1)	4.91	
C- D	-2054 / 0	-112.4	-112.4	0.19 (1)	4.57	
D- E	-2466 / 0	-112.4	-112.4	0.55 (1)	3.80	
E- F	-2727 / 0	-112.4	-112.4	0.58 (1)	3.61	
F- G	-2727 / 0	-112.4	-112.4	0.58 (1)	3.61	
G- H	-2727 / 0	-112.4	-112.4	0.58 (1)	3.61	
H- I	-2466 / 0	-112.4	-112.4	0.55 (1)	3.80	
I- J	-2054 / 0	-112.4	-112.4	0.19 (1)	4.57	
J- K	-1732 / 0	-112.4	-112.4	0.16 (1)	4.91	
K- L	0 / 50	-112.4	-112.4	0.15 (1)	10.00	
W- B	-2155 / 0	0.0	0.0	0.23 (1)	5.78	
M- K	-2155 / 0	0.0	0.0	0.23 (1)	5.78	
W- V	0 / 0	-18.5	-18.5	0.02 (1)	10.00	
V- U	0 / 1351	-18.5	-18.5	0.27 (1)	10.00	
U- T	0 / 1555	-18.5	-18.5	0.30 (1)	10.00	
T- S	0 / 2466	-18.5	-18.5	0.44 (1)	10.00	
S- R	0 / 2466	-18.5	-18.5	0.44 (1)	10.00	
R- Q	0 / 2466	-18.5	-18.5	0.44 (1)	10.00	
Q- P	0 / 2466	-18.5	-18.5	0.44 (1)	10.00	
P- O	0 / 1555	-18.5	-18.5	0.30 (1)	10.00	
O- N	0 / 1351	-18.5	-18.5	0.27 (1)	10.00	
N- M	0 / 0	-18.5	-18.5	0.02 (1)	10.00	

WEBS

MEMB. FR-TO	MAX. FACTORED FORCE (LBS)	MAX CSI (LC)
V- C	-758 / 0	0.11 (1)
C- U	0 / 289	0.06 (1)
U- D	-110 / 29	0.06 (1)
O- I	-110 / 29	0.06 (1)
O- J	0 / 289	0.06 (1)
N- J	-758 / 0	0.11 (1)
B- V	0 / 1565	0.35 (1)
N- K	0 / 1565	0.35 (1)
P- I	0 / 1378	0.31 (1)
D- T	0 / 1378	0.31 (1)
P- H	-940 / 0	0.55 (1)
T- E	-940 / 0	0.55 (1)
R- H	0 / 399	0.09 (1)
E- R	0 / 399	0.09 (1)
R- F	-517 / 0	0.30 (1)

DESIGN CRITERIA

SPECIFIED LOADS:

TOP CH.	LL	=	32.5	PSF
	DL	=	6.0	PSF
BOT CH.	LL	=	0.0	PSF
	DL	=	7.4	PSF
TOTAL LOAD		=	45.9	PSF

SPACING = 24.0 IN. C/C

LOADING IN FLAT SECTION BASED ON A SLOPE OF 6.00/12

THIS TRUSS IS DESIGNED FOR RESIDENTIAL OR SMALL BUILDING REQUIREMENTS OF PART 9, NBCC 2015

THIS DESIGN COMPLIES WITH:
- PART 9 OF BCBC 2018 , ABC 2019
- PART 9 OF OBC 2012 (2019 AMENDMENT)
- CSA 086-14
- TPIC 2014

(55 % OF 43.9 P.S.F. G.S.L. PLUS 8.4 P.S.F. RAIN LOAD) EQUALS 32.5 P.S.F. SPECIFIED ROOF LIVE LOAD

ALLOWABLE DEFL.(LL)= L/360 (1.03")
CALCULATED VERT. DEFL.(LL) = L/ 999 (0.12")
ALLOWABLE DEFL.(TL)= L/360 (1.03")
CALCULATED VERT. DEFL.(TL) = L/ 999 (0.21")

CSI: TC=0.58/1.00 (F-H:1) , BC=0.44/1.00 (P-R:1) , WB=0.55/1.00 (E-T:1) , SSI=0.27/1.00 (H-I:1)

DOL LUMBER=1.00 NAIL=1.00 LS BEND=1.10 COMP=1.10 SHEAR=1.10 TENS= 1.10

COMPANION LIVE LOAD FACTOR = 1.00

TRUSS PLATE MANUFACTURER IS NOT RESPONSIBLE FOR QUALITY CONTROL IN THE TRUSS MANUFACTURING PLANT .

NAIL VALUES

PLATE	GRIP(DRY) (PSI) MAX	MIN	SHEAR (PLI) MAX	MIN	SECTION (PLI) MAX	MIN
MT20	650	371	1747	788	1987	1873

PLATE PLACEMENT TOL. = 0.250 inches

PLATE ROTATION TOL. = 5.0 Deg.

JSI GRIP= 0.89 (K) (INPUT = 0.90)
JSI METAL= 0.75 (S) (INPUT = 1.00)

REVIEWED

CONTINUED ON PAGE 2

JOB NAME	TRUSS NAME	QUANTITY	PLY	JOB DESC.	DRWG NO.
423610	T9	1	1	BAYVIEW WELLINGTON TRUSS DESC.	

Edge - INDICATES REFERENCE CORNER OF PLATE TOUCHES EDGE OF CHORD.

NOTES- (1)
1) Lateral braces to be a minimum of 2X4 SPF #2.

LICENSED PROFESSIONAL ENGINEER
06-24-22
H. J. G. ALVES
100009024
PROVINCE OF ONTARIO

Structural component only
DWG# T-2215281

REVIEWED

JOB NAME	TRUSS NAME	QUANTITY	PLY	JOB DESC.	DRWG NO.
423610	T9C	1	1	BAYVIEW WELLINGTON TRUSS DESC.	

Tamarack Roof Truss, Burlington

Version 8.530 S Feb 23 2022 MiTek Industries, Inc. Fri Jun 24 13:52:29 2022 Page 1
ID:c3jyj23uDijq_8pvRKbkZpy75XW-uj1OUQ5u2NwjkMEoGYuu3utrg7mbxfpuL5BCJPz33aW

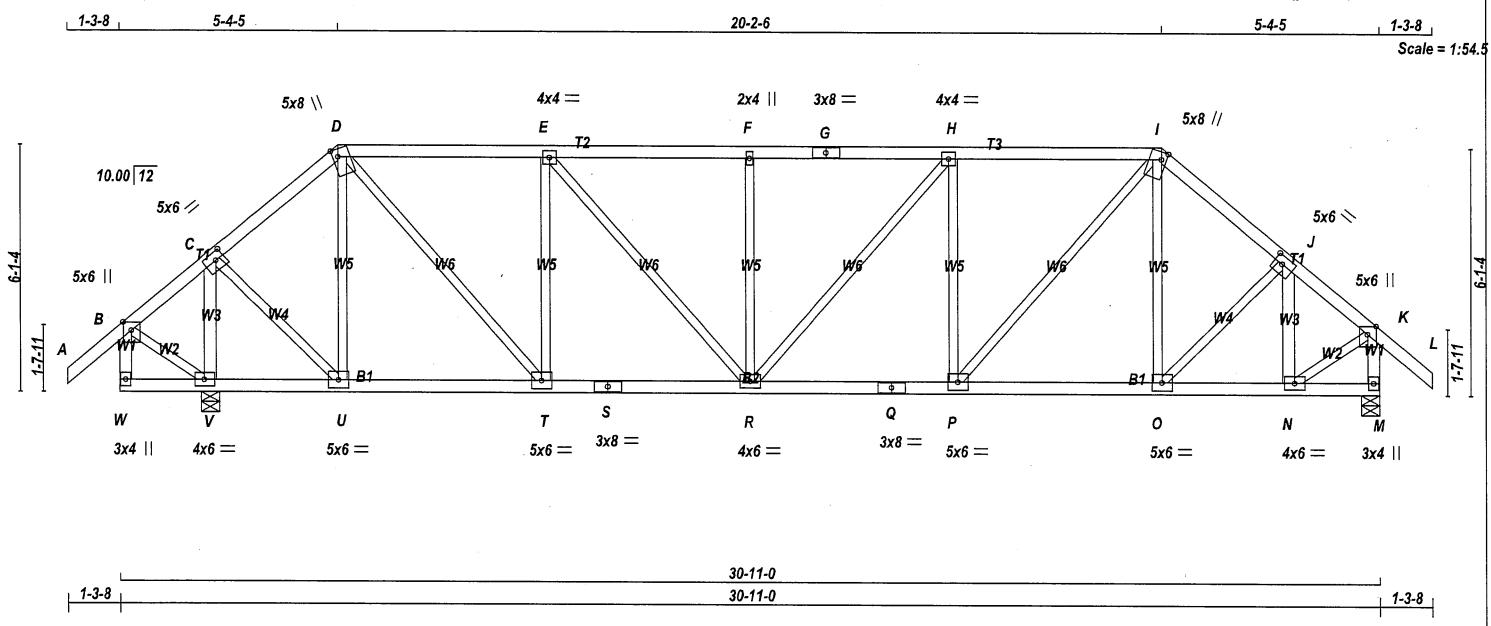

TOTAL WEIGHT = 145 lb
[M]

LUMBER

N. L. G. A. RULES

CHORDS	SIZE		LUMBER	DESCR.
A - D	2x4	DRY	No.2	SPF
D - G	2x4	DRY	No.2	SPF
G - I	2x4	DRY	No.2	SPF
I - L	2x4	DRY	No.2	SPF
W - B	2x4	DRY	No.2	SPF
M - K	2x4	DRY	No.2	SPF
W - S	2x4	DRY	No.2	SPF
S - Q	2x4	DRY	No.2	SPF
Q - M	2x4	DRY	No.2	SPF
ALL WEBS	2x3	DRY	No.2	SPF
EXCEPT				
V - C	2x4	DRY	No.2	SPF
N - J	2x4	DRY	No.2	SPF

DRY: SEASONED LUMBER.

PLATES (table is in inches)

JT	TYPE	PLATES	W	LEN	Y	X
B	TMVW+p	MT20	5.0	6.0	Edge	
C	TMWW-t	MT20	5.0	6.0	2.25	2.50
D	TTWW+m	MT20	5.0	8.0	2.25	1.50
E	TMWW-t	MT20	4.0	4.0		
F	TMW+w	MT20	2.0	4.0		
G	TS-t	MT20	3.0	8.0		
H	TMWW-t	MT20	4.0	4.0		
I	TTWW+m	MT20	5.0	8.0	2.25	1.50
J	TMWW-t	MT20	5.0	6.0	2.25	2.50
K	TMVW+p	MT20	5.0	6.0	Edge	
M	BMV1+p	MT20	3.0	4.0		
N	BMWW-t	MT20	4.0	6.0		
O, P, T, U						
O	BMWW-t	MT20	5.0	6.0		
Q	BS-t	MT20	3.0	8.0		
R	BMWWW-t	MT20	4.0	6.0		
S	BS-t	MT20	3.0	8.0		
V	BMWW1-t	MT20	4.0	6.0		
W	BMV+p	MT20	3.0	4.0		

Edge - INDICATES REFERENCE CORNER OF PLATE TOUCHES EDGE OF CHORD.

LICENSED PROFESSIONAL ENGINEER
06-24-22
H. J. G. ALVES
100009024
PROVINCE OF ONTARIO

Structural component only
DWG# T-2215282

DIMENSIONS, SUPPORTS AND LOADINGS SPECIFIED BY FABRICATOR TO BE VERIFIED BY BUILDING DESIGNER

BEARINGS

JT	FACTORED GROSS REACTION VERT	HORZ	MAXIMUM FACTORED GROSS REACTION DOWN	HORZ	UPLIFT	INPUT BRG IN-SX	REQRD BRG IN-SX
V	2349	0	2349	0	0	5-8	5-8
M	2010	0	2010	0	0	5-8	5-8

UNFACTORED REACTIONS

JT	1ST LCASE COMBINED	MAX./MIN. COMPONENT REACTIONS SNOW	LIVE	PERM.LIVE	WIND	DEAD	SOIL
V	1643	1179 / 0	0 / 0	0 / 0	0 / 0	464 / 0	0 / 0
M	1406	1009 / 0	0 / 0	0 / 0	0 / 0	397 / 0	0 / 0

BEARING MATERIAL TO BE SPF NO.2 OR BETTER AT JOINT(S) V, M

BRACING

TOP CHORD TO BE SHEATHED OR MAX. PURLIN SPACING = 3.95 FT.
MAX. UNBRACED BOTTOM CHORD LENGTH = 6.25 FT OR RIGID CEILING DIRECTLY APPLIED.

ALL PITCH BREAKS AND PERIMETER CORNER JOINTS MUST BE LATERALLY RESTRAINED.

LOADING

TOTAL LOAD CASES: (4)

CHORDS

MEMB. FR-TO	MAX. FACTORED FORCE (LBS)	FACTORED VERT. LOAD LC1 (PLF) FROM	TO	MAX CSI (LC)	MAX. UNBRAC LENGTH
A- B	0 / 50	-112.4	-112.4	0.15 (1)	10.00
B- C	0 / 244	-112.4	-112.4	0.21 (1)	10.00
C- D	-1100 / 0	-112.4	-112.4	0.19 (1)	5.80
D- E	-1871 / 0	-112.4	-112.4	0.50 (1)	4.32
E- F	-2277 / 0	-112.4	-112.4	0.53 (1)	3.95
F- G	-2277 / 0	-112.4	-112.4	0.53 (1)	3.95
G- H	-2277 / 0	-112.4	-112.4	0.53 (1)	3.95
H- I	-2162 / 0	-112.4	-112.4	0.53 (1)	4.05
I- J	-1848 / 0	-112.4	-112.4	0.18 (1)	4.77
J- K	-1577 / 0	-112.4	-112.4	0.16 (1)	5.09
K- L	0 / 50	-112.4	-112.4	0.15 (1)	10.00
W- B	0 / 14	0.0	0.0	0.00 (4)	10.00
M- K	-1986 / 0	0.0	0.0	0.21 (1)	5.98
W- V	0 / 0	-18.5	-18.5	0.06 (1)	10.00
V- U	-160 / 0	-18.5	-18.5	0.07 (4)	6.25
U- T	0 / 807	-18.5	-18.5	0.17 (1)	10.00
T- S	0 / 1871	-18.5	-18.5	0.35 (1)	10.00
S- R	0 / 1871	-18.5	-18.5	0.35 (1)	10.00
R- Q	0 / 2162	-18.5	-18.5	0.39 (1)	10.00
Q- P	0 / 2162	-18.5	-18.5	0.39 (1)	10.00
P- O	0 / 1399	-18.5	-18.5	0.27 (1)	10.00
O- N	0 / 1232	-18.5	-18.5	0.25 (1)	10.00
N- M	0 / 0	-18.5	-18.5	0.02 (1)	10.00

WEBS

MEMB. FR-TO	MAX. FACTORED FORCE (LBS)	MAX CSI (LC)
V- C	-2181 / 0	0.32 (1)
C- U	0 / 1374	0.31 (1)
U- D	-890 / 0	0.52 (1)
O- I	-73 / 39	0.04 (1)
O- J	0 / 234	0.05 (1)
N- J	-687 / 0	0.10 (1)
B- V	-185 / 0	0.03 (1)
N- K	0 / 1428	0.32 (1)
P- I	0 / 1155	0.26 (1)
D- T	0 / 1610	0.36 (1)
P- H	-773 / 0	0.45 (1)
T- E	-1113 / 0	0.65 (1)
R- H	0 / 176	0.04 (1)
E- R	0 / 622	0.14 (1)
R- F	-517 / 0	0.30 (1)

DESIGN CRITERIA

SPECIFIED LOADS:

TOP CH.	LL	=	32.5	PSF
	DL	=	6.0	PSF
BOT CH.	LL	=	0.0	PSF
	DL	=	7.4	PSF
TOTAL LOAD		=	45.9	PSF

SPACING = 24.0 IN. C/C

LOADING IN FLAT SECTION BASED ON A SLOPE OF 6.00/12

THIS TRUSS IS DESIGNED FOR RESIDENTIAL OR SMALL BUILDING REQUIREMENTS OF PART 9, NBCC 2015

THIS DESIGN COMPLIES WITH:
- PART 9 OF BCBC 2018 , ABC 2019
- PART 9 OF OBC 2012 (2019 AMENDMENT)
- CSA 086-14
- TPIC 2014

(55 % OF 43.9 P.S.F. G.S.L. PLUS 8.4 P.S.F. RAIN LOAD) EQUALS 32.5 P.S.F. SPECIFIED ROOF LIVE LOAD

ALLOWABLE DEFL.(LL)= L/360 (0.96")
CALCULATED VERT. DEFL.(LL) = L/ 999 (0.10")
ALLOWABLE DEFL.(TL)= L/360 (0.96")
CALCULATED VERT. DEFL.(TL) = L/ 999 (0.18")

CANTILEVER DEFLECTION:
ALLOWABLE DEFL.(LL)= L/120 (0.22")
CALCULATED VERT. DEFL.(LL) = L/ 999 (0.00")
ALLOWABLE DEFL.(TL)= L/120 (0.22")
CALCULATED VERT. DEFL.(TL) = L/ 999 (0.01")

CSI: TC=0.53/1.00 (F-H:1) , BC=0.39/1.00 (P-R:1) , WB=0.65/1.00 (E-T:1) , SSI=0.27/1.00 (H-I:1)

DOL LUMBER=1.00 NAIL=1.00 LS BEND=1.10 COMP=1.10 SHEAR=1.10 TENS= 1.10

COMPANION LIVE LOAD FACTOR = 1.00

TRUSS PLATE MANUFACTURER IS NOT RESPONSIBLE FOR QUALITY CONTROL IN THE TRUSS MANUFACTURING PLANT .

NAIL VALUES

PLATE	GRIP(DRY) (PSI) MAX	MIN	SHEAR (PLI) MAX	MIN	SECTION (PLI) MAX	MIN
MT20	650	371	1747	788	1987	1873

PLATE PLACEMENT TOL. = 0.250 inches

PLATE ROTATION TOL. = 5.0 Deg.

JSI GRIP= 0.88 (D) (INPUT = 0.90)
JSI METAL= 0.66 (S) (INPUT = 1.00)

REVIEWED

CONTINUED ON PAGE 2

JOB NAME	TRUSS NAME	QUANTITY	PLY	JOB DESC.	DRWG NO.
423610	T9C	1	1	BAYVIEW WELLINGTON TRUSS DESC.	

NOTES- (1)
1) Lateral braces to be a minimum of 2X4 SPF #2.

LICENSED PROFESSIONAL ENGINEER
06-24-22
H. J. G. ALVES
100009024
PROVINCE OF ONTARIO

Structural component only
DWG# T-2215282

REVIEWED

JOB NAME	TRUSS NAME	QUANTITY	PLY	JOB DESC.	DRWG NO.
423610	T10	2	1	BAYVIEW WELLINGTON TRUSS DESC.	

Tamarack Roof Truss, Burlington

Version 8.530 S Feb 23 2022 MiTek Industries, Inc. Fri Jun 24 13:52:30 2022 Page 1
ID:c3jyj23uDijq_8pvRKbkZpy75XW-Mvbmhm6Wph2aLWp_qGP7b5PzeX6Kg5x2ZIxmrsz33aV

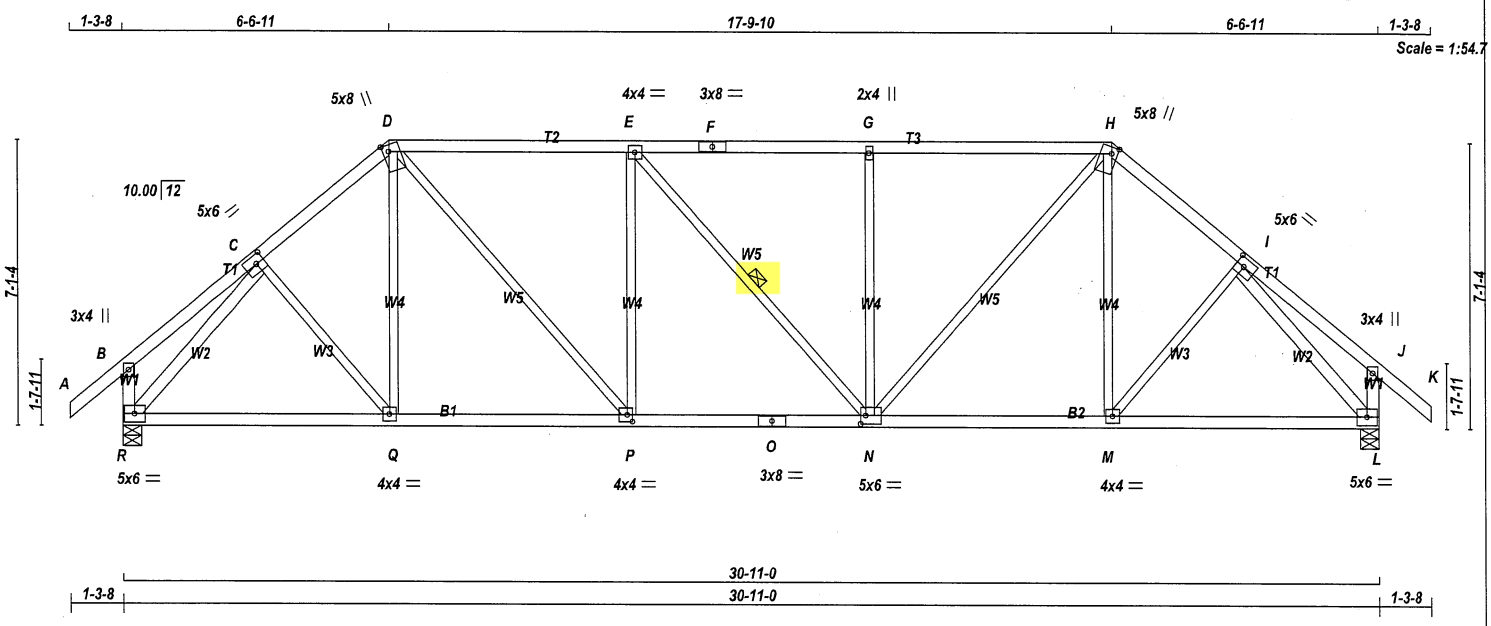

TOTAL WEIGHT = 2 X 143 = 287 lb

LUMBER

N. L. G. A. RULES

CHORDS	SIZE		LUMBER	DESCR.
A - D	2x4	DRY	No.2	SPF
D - F	2x4	DRY	No.2	SPF
F - H	2x4	DRY	No.2	SPF
H - K	2x4	DRY	No.2	SPF
R - B	2x4	DRY	No.2	SPF
L - J	2x4	DRY	No.2	SPF
R - O	2x4	DRY	No.2	SPF
O - L	2x4	DRY	No.2	SPF
ALL WEBS EXCEPT	2x3	DRY	No.2	SPF
R - C	2x4	DRY	No.2	SPF
I - L	2x4	DRY	No.2	SPF

DRY: SEASONED LUMBER.

PLATES (table is in inches)

JT	TYPE	PLATES	W	LEN	Y	X
B	TMV+p	MT20	3.0	4.0		
C	TMWW-t	MT20	5.0	6.0	2.50	2.50
D	TTWW+m	MT20	5.0	8.0	2.00	1.75
E	TMWW-t	MT20	4.0	4.0		
F	TS-t	MT20	3.0	8.0		
G	TMW+w	MT20	2.0	4.0		
H	TTWW+m	MT20	5.0	8.0	2.00	1.75
I	TMWW-t	MT20	5.0	6.0	2.50	2.50
J	TMV+p	MT20	3.0	4.0		
L	BMVW1-t	MT20	5.0	6.0		
M	BMWW-t	MT20	4.0	4.0		
N	BMWWW-t	MT20	5.0	6.0	2.50	1.50
O	BS-t	MT20	3.0	8.0		
P	BMWW-t	MT20	4.0	4.0	2.00	1.50
Q	BMWW-t	MT20	4.0	4.0		
R	BMVW1-t	MT20	5.0	6.0		

NOTES- (1)
1) Lateral braces to be a minimum of 2X4 SPF #2.

DIMENSIONS, SUPPORTS AND LOADINGS SPECIFIED BY FABRICATOR TO BE VERIFIED BY BUILDING DESIGNER

BEARINGS

JT	FACTORED GROSS REACTION VERT	HORZ	MAXIMUM FACTORED GROSS REACTION DOWN	HORZ	UPLIFT	INPUT BRG IN-SX	REQRD BRG IN-SX
R	2180	0	2180	0	0	5-8	5-8
L	2180	0	2180	0	0	5-8	5-8

UNFACTORED REACTIONS

JT	1ST LCASE COMBINED	MAX./MIN. COMPONENT REACTIONS SNOW	LIVE	PERM.LIVE	WIND	DEAD	SOIL
R	1525	1094 / 0	0 / 0	0 / 0	0 / 0	431 / 0	0 / 0
L	1525	1094 / 0	0 / 0	0 / 0	0 / 0	431 / 0	0 / 0

BEARING MATERIAL TO BE SPF NO.2 OR BETTER AT JOINT(S) R, L

BRACING

TOP CHORD TO BE SHEATHED OR MAX. PURLIN SPACING = 3.71 FT.
MAX. UNBRACED BOTTOM CHORD LENGTH = 10.00 FT OR RIGID CEILING DIRECTLY APPLIED.

ALL PITCH BREAKS AND PERIMETER CORNER JOINTS MUST BE LATERALLY RESTRAINED.

1 LATERAL BRACE(S) AT 1/ 2 LENGTH OF E-N.

END VERTICAL(S) MUST BE SHEATHED OR HAVE BRACES AS INDICATED IN THE MAX. UNBRACED LENGTH COLUMN OF THE TABLE BELOW

LOADING

TOTAL LOAD CASES: (4)

CHORDS

MEMB. FR-TO	MAX. FACTORED FORCE (LBS)	FACTORED VERT. LOAD (PLF) FROM	TO	LC1	MAX CSI (LC)	MAX. UNBRAC LENGTH
A- B	0 / 50	-112.4	-112.4	0.15 (1)	10.00	10.00
B- C	0 / 26	-112.4	-112.4	0.18 (1)	10.00	10.00
C- D	-2051 / 0	-112.4	-112.4	0.24 (1)	4.50	4.50
D- E	-2276 / 0	-112.4	-112.4	0.71 (1)	3.71	3.71
E- F	-2275 / 0	-112.4	-112.4	0.70 (1)	3.71	3.71
F- G	-2275 / 0	-112.4	-112.4	0.70 (1)	3.71	3.71
G- H	-2274 / 0	-112.4	-112.4	0.70 (1)	3.72	3.72
H- I	-2051 / 0	-112.4	-112.4	0.24 (1)	4.50	4.50
I- J	0 / 26	-112.4	-112.4	0.18 (1)	10.00	10.00
J- K	0 / 50	-112.4	-112.4	0.15 (1)	10.00	10.00
R- B	-298 / 0	0.0	0.0	0.03 (1)	7.81	7.81
L- J	-298 / 0	0.0	0.0	0.03 (1)	7.81	
R- Q	0 / 1483	-18.5	-18.5	0.34 (1)	10.00	
Q- P	0 / 1552	-18.5	-18.5	0.35 (1)	10.00	
P- O	0 / 2276	-18.5	-18.5	0.42 (1)	10.00	
O- N	0 / 2276	-18.5	-18.5	0.42 (1)	10.00	
N- M	0 / 1552	-18.5	-18.5	0.35 (1)	10.00	
M- L	0 / 1483	-18.5	-18.5	0.34 (1)	10.00	

WEBS

MEMB. FR-TO	MAX. FACTORED FORCE (LBS)	MAX CSI (LC)
C- Q	0 / 106	0.03 (4)
Q- D	0 / 94	0.03 (4)
D- P	0 / 1097	0.25 (1)
P- E	-720 / 0	0.63 (1)
E- N	-3 / 0	0.00 (1)
N- G	-719 / 0	0.63 (1)
N- H	0 / 1094	0.25 (1)
M- H	0 / 94	0.03 (4)
M- I	0 / 106	0.03 (4)
R- C	-2356 / 0	0.72 (1)
I- L	-2357 / 0	0.72 (1)

DESIGN CRITERIA

SPECIFIED LOADS:

TOP CH.	LL	=	32.5	PSF
	DL	=	6.0	PSF
BOT CH.	LL	=	0.0	PSF
	DL	=	7.4	PSF
TOTAL LOAD		=	45.9	PSF

SPACING = 24.0 IN. C/C

LOADING IN FLAT SECTION BASED ON A SLOPE OF 6.00/12

THIS TRUSS IS DESIGNED FOR RESIDENTIAL OR SMALL BUILDING REQUIREMENTS OF PART 9, NBCC 2015

THIS DESIGN COMPLIES WITH:
- PART 9 OF BCBC 2018 , ABC 2019
- PART 9 OF OBC 2012 (2019 AMENDMENT)
- CSA 086-14
- TPIC 2014

(55 % OF 43.9 P.S.F. G.S.L. PLUS 8.4 P.S.F. RAIN LOAD) EQUALS 32.5 P.S.F. SPECIFIED ROOF LIVE LOAD

ALLOWABLE DEFL.(LL)= L/360 (1.03")
CALCULATED VERT. DEFL.(LL) = L/ 999 (0.10")
ALLOWABLE DEFL.(TL)= L/360 (1.03")
CALCULATED VERT. DEFL.(TL) = L/ 999 (0.18")

CSI: TC=0.71/1.00 (D-E:1) , BC=0.42/1.00 (N-P:1) , WB=0.72/1.00 (I-L:1) , SSI=0.31/1.00 (D-E:1)

DOL LUMBER=1.00 NAIL=1.00 LS BEND=1.10 COMP=1.10 SHEAR=1.10 TENS= 1.10

COMPANION LIVE LOAD FACTOR = 1.00

AUTOSOLVE HEELS OFF

TRUSS PLATE MANUFACTURER IS NOT RESPONSIBLE FOR QUALITY CONTROL IN THE TRUSS MANUFACTURING PLANT .

NAIL VALUES

PLATE	GRIP(DRY) (PSI) MAX	MIN	SHEAR (PLI) MAX	MIN	SECTION (PLI) MAX	MIN
MT20	650	371	1747	788	1987	1873

PLATE PLACEMENT TOL. = 0.250 inches

PLATE ROTATION TOL. = 5.0 Deg.

JSI GRIP= 0.88 (I) (INPUT = 0.90)
JSI METAL= 0.74 (O) (INPUT = 1.00)

LICENSED PROFESSIONAL ENGINEER
06-24-22
H. J. G. ALVES
100009024
PROVINCE OF ONTARIO

Structural component only
DWG# T-2215283

REVIEWED

JOB NAME	TRUSS NAME	QUANTITY	PLY	JOB DESC.	DRWG NO.
423610	T11	2	1	BAYVIEW WELLINGTON TRUSS DESC.	

Tamarack Roof Truss, Burlington

Version 8.530 S Feb 23 2022 MiTek Industries, Inc. Fri Jun 24 13:52:31 2022 Page 1
ID:c3jyj23uDijq_8pvRKbkZpy75XW-r599v668a_ARzgOANzwM8JyCoxTBPUrBoPgJNlz33aU

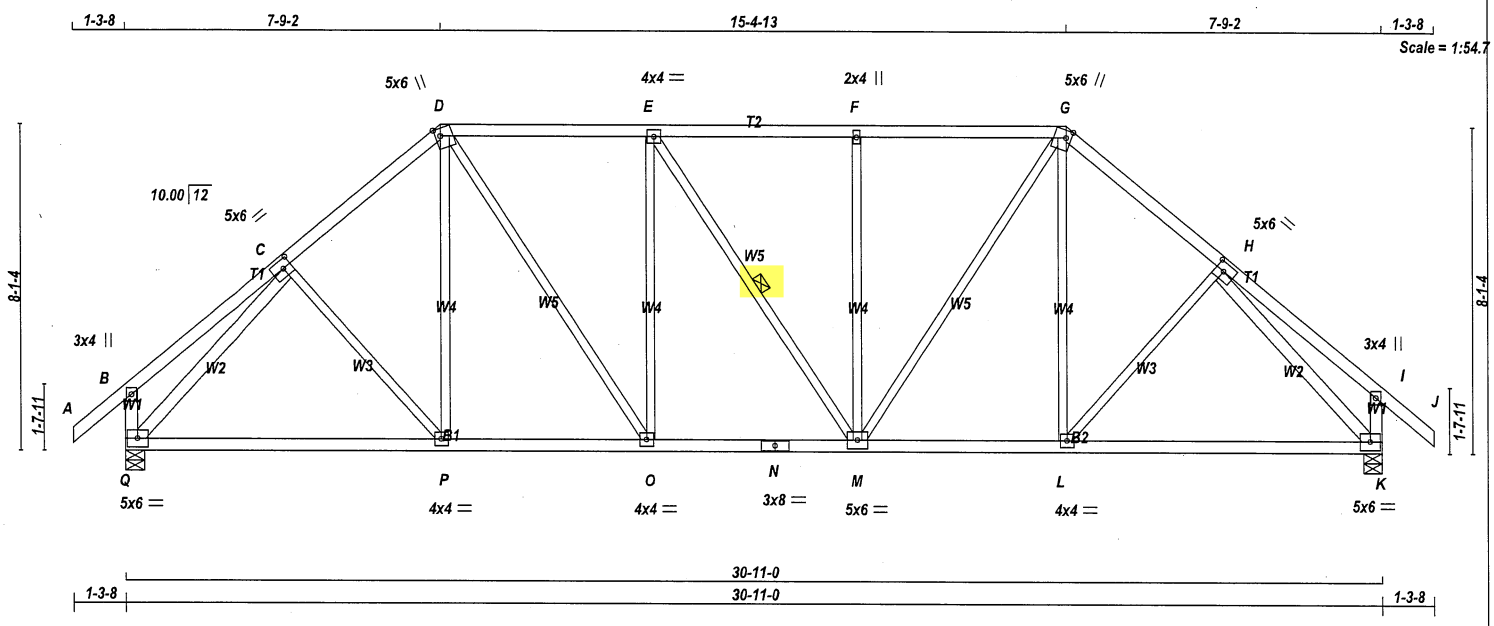

TOTAL WEIGHT = 2 X 151 = 303 lb

[M]

LUMBER

N. L. G. A. RULES

CHORDS	SIZE		LUMBER	DESCR.
A - D	2x4	DRY	No.2	SPF
D - G	2x4	DRY	No.2	SPF
G - J	2x4	DRY	No.2	SPF
Q - B	2x4	DRY	No.2	SPF
K - I	2x4	DRY	No.2	SPF
Q - N	2x4	DRY	No.2	SPF
N - K	2x4	DRY	No.2	SPF
ALL WEBS EXCEPT	2x3	DRY	No.2	SPF
Q - C	2x4	DRY	No.2	SPF
H - K	2x4	DRY	No.2	SPF

DRY: SEASONED LUMBER.

PLATES (table is in inches)

JT	TYPE	PLATES	W	LEN	Y	X
B	TMV+p	MT20	3.0	4.0		
C	TMWW-t	MT20	5.0	6.0	2.50	2.50
D	TTWW+m	MT20	5.0	6.0	2.25	1.50
E	TMWW-t	MT20	4.0	4.0		
F	TMW+w	MT20	2.0	4.0		
G	TTWW+m	MT20	5.0	6.0	2.25	1.50
H	TMWW-t	MT20	5.0	6.0	2.50	2.50
I	TMV+p	MT20	3.0	4.0		
K	BMVW1-t	MT20	5.0	6.0		
L, O, P						
L	BMWW-t	MT20	4.0	4.0		
M	BMWWW-t	MT20	5.0	6.0		
N	BS-t	MT20	3.0	8.0		
Q	BMVW1-t	MT20	5.0	6.0		

NOTES- (1)
1) Lateral braces to be a minimum of 2X4 SPF #2.

DIMENSIONS, SUPPORTS AND LOADINGS SPECIFIED BY FABRICATOR TO BE VERIFIED BY BUILDING DESIGNER

BEARINGS

JT	FACTORED GROSS REACTION VERT	HORZ	MAXIMUM FACTORED GROSS REACTION DOWN	HORZ	UPLIFT	INPUT BRG IN-SX	REQRD BRG IN-SX
Q	2180	0	2180	0	0	5-8	5-8
K	2180	0	2180	0	0	5-8	5-8

UNFACTORED REACTIONS

JT	1ST LCASE COMBINED	MAX./MIN. COMPONENT REACTIONS SNOW	LIVE	PERM.LIVE	WIND	DEAD	SOIL
Q	1525	1094 / 0	0 / 0	0 / 0	0 / 0	431 / 0	0 / 0
K	1525	1094 / 0	0 / 0	0 / 0	0 / 0	431 / 0	0 / 0

BEARING MATERIAL TO BE SPF NO.2 OR BETTER AT JOINT(S) Q, K

BRACING

TOP CHORD TO BE SHEATHED OR MAX. PURLIN SPACING = 4.23 FT.
MAX. UNBRACED BOTTOM CHORD LENGTH = 10.00 FT OR RIGID CEILING DIRECTLY APPLIED.

ALL PITCH BREAKS AND PERIMETER CORNER JOINTS MUST BE LATERALLY RESTRAINED.

1 LATERAL BRACE(S) AT 1/ 2 LENGTH OF E-M.

END VERTICAL(S) MUST BE SHEATHED OR HAVE BRACES AS INDICATED IN THE MAX. UNBRACED LENGTH COLUMN OF THE TABLE BELOW

LOADING

TOTAL LOAD CASES: (4)

CHORDS

MEMB. FR-TO	MAX. FACTORED FORCE (LBS)	FACTORED VERT. LOAD (PLF) FROM	TO	LC1	MAX CSI (LC)	MAX. UNBRAC LENGTH
A- B	0 / 50	-112.4	-112.4	0.15 (1)	10.00	
B- C	0 / 32	-112.4	-112.4	0.27 (1)	10.00	
C- D	-2017 / 0	-112.4	-112.4	0.35 (1)	4.42	
D- E	-1988 / 0	-112.4	-112.4	0.49 (1)	4.23	
E- F	-1987 / 0	-112.4	-112.4	0.49 (1)	4.24	
F- G	-1986 / 0	-112.4	-112.4	0.48 (1)	4.25	
G- H	-2017 / 0	-112.4	-112.4	0.35 (1)	4.42	
H- I	0 / 32	-112.4	-112.4	0.27 (1)	10.00	
I- J	0 / 50	-112.4	-112.4	0.15 (1)	10.00	
Q- B	-322 / 0	0.0	0.0	0.03 (1)	7.81	
K- I	-322 / 0	0.0	0.0	0.03 (1)	7.81	
Q- P	0 / 1533	-18.5	-18.5	0.38 (1)	10.00	
P- O	0 / 1523	-18.5	-18.5	0.38 (1)	10.00	
O- N	0 / 1988	-18.5	-18.5	0.37 (1)	10.00	
N- M	0 / 1988	-18.5	-18.5	0.37 (1)	10.00	
M- L	0 / 1523	-18.5	-18.5	0.38 (1)	10.00	
L- K	0 / 1533	-18.5	-18.5	0.38 (1)	10.00	

WEBS

MEMB. FR-TO	MAX. FACTORED FORCE (LBS)	MAX CSI (LC)
C- P	-18 / 46	0.02 (4)
P- D	0 / 161	0.05 (4)
D- O	0 / 842	0.19 (1)
O- E	-621 / 0	0.79 (1)
E- M	-4 / 0	0.00 (1)
M- F	-620 / 0	0.78 (1)
M- G	0 / 838	0.19 (1)
L- G	0 / 163	0.05 (4)
L- H	-18 / 46	0.02 (4)
Q- C	-2363 / 0	1.00 (1)
H- K	-2363 / 0	1.00 (1)

DESIGN CRITERIA

SPECIFIED LOADS:

TOP CH.	LL	=	32.5	PSF
	DL	=	6.0	PSF
BOT CH.	LL	=	0.0	PSF
	DL	=	7.4	PSF
TOTAL LOAD		=	45.9	PSF

SPACING = 24.0 IN. C/C

LOADING IN FLAT SECTION BASED ON A SLOPE OF 6.00/12

THIS TRUSS IS DESIGNED FOR RESIDENTIAL OR SMALL BUILDING REQUIREMENTS OF PART 9, NBCC 2015

THIS DESIGN COMPLIES WITH:
- PART 9 OF BCBC 2018 , ABC 2019
- PART 9 OF OBC 2012 (2019 AMENDMENT)
- CSA 086-14
- TPIC 2014

(55 % OF 43.9 P.S.F. G.S.L. PLUS 8.4 P.S.F. RAIN LOAD) EQUALS 32.5 P.S.F. SPECIFIED ROOF LIVE LOAD

ALLOWABLE DEFL.(LL)= L/360 (1.03")
CALCULATED VERT. DEFL.(LL) = L/ 999 (0.08")
ALLOWABLE DEFL.(TL)= L/360 (1.03")
CALCULATED VERT. DEFL.(TL) = L/ 999 (0.16")

CSI: TC=0.49/1.00 (D-E:1) , BC=0.38/1.00 (K-L:1) , WB=1.00/1.00 (H-K:1) , SSI=0.27/1.00 (D-E:1)

DOL LUMBER=1.00 NAIL=1.00 LS BEND=1.10 COMP=1.10 SHEAR=1.10 TENS= 1.10

COMPANION LIVE LOAD FACTOR = 1.00

AUTOSOLVE HEELS OFF

TRUSS PLATE MANUFACTURER IS NOT RESPONSIBLE FOR QUALITY CONTROL IN THE TRUSS MANUFACTURING PLANT .

NAIL VALUES

PLATE	GRIP(DRY) (PSI) MAX	MIN	SHEAR (PLI) MAX	MIN	SECTION (PLI) MAX	MIN
MT20	650	371	1747	788	1987	1873

PLATE PLACEMENT TOL. = 0.250 inches

PLATE ROTATION TOL. = 5.0 Deg.

JSI GRIP= 0.88 (G) (INPUT = 0.90)
JSI METAL= 0.66 (N) (INPUT = 1.00)

LICENSED PROFESSIONAL ENGINEER
06-24-22
H. J. G. ALVES
100009024
PROVINCE OF ONTARIO

Structural component only
DWG# T-2215284

REVIEWED

JOB NAME	TRUSS NAME	QUANTITY	PLY	JOB DESC.	DRWG NO.
423610	T12	2	1	BAYVIEW WELLINGTON TRUSS DESC.	

Tamarack Roof Truss, Burlington

Version 8.530 S Feb 23 2022 MiTek Industries, Inc. Fri Jun 24 13:52:32 2022 Page 1
ID:c3jyj23uDijq_8pvRKbkZpy75XW-JIjX6S7mLIJIbqzNxhRbhWVJiKpL83BL13Qswkz33aT

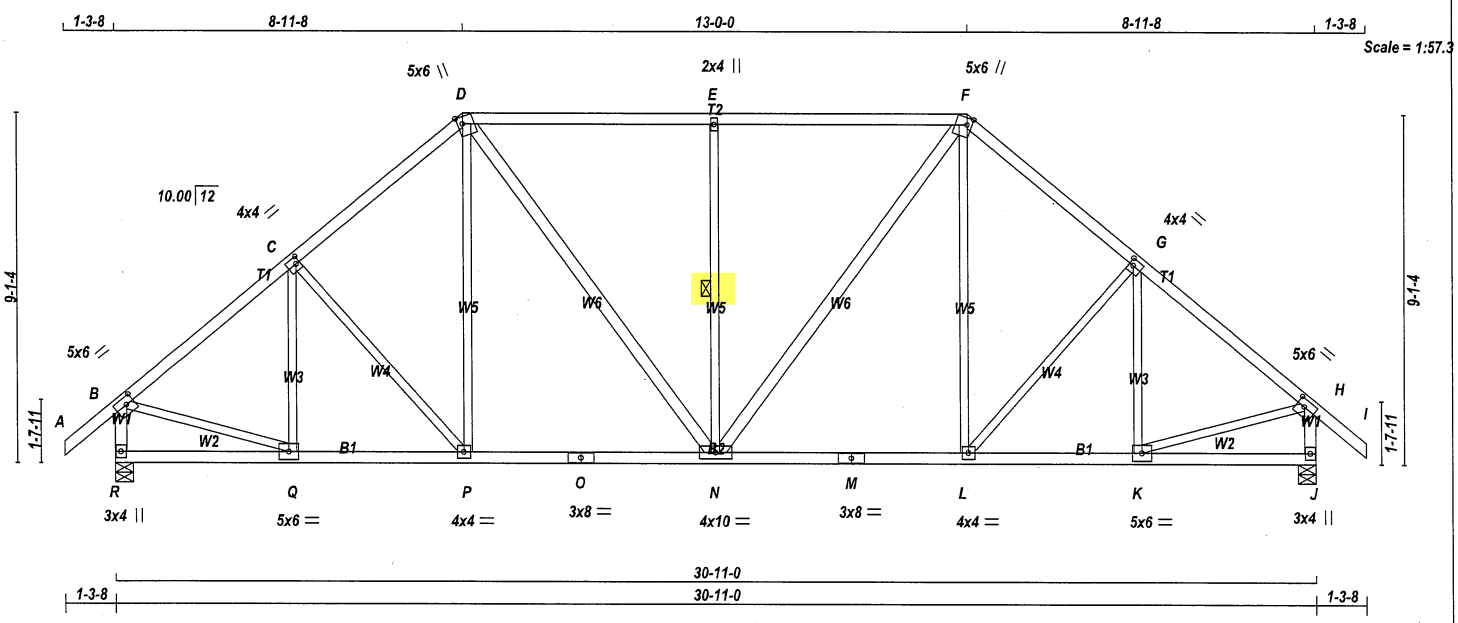

TOTAL WEIGHT = 2 X 154 = 309 lb

[M][F]

LUMBER

N. L. G. A. RULES

CHORDS	SIZE		LUMBER	DESCR.
A - D	2x4	DRY	No.2	SPF
D - F	2x4	DRY	No.2	SPF
F - I	2x4	DRY	No.2	SPF
R - B	2x4	DRY	No.2	SPF
J - H	2x4	DRY	No.2	SPF
R - O	2x4	DRY	No.2	SPF
O - M	2x4	DRY	No.2	SPF
M - J	2x4	DRY	No.2	SPF
ALL WEBS	2x3	DRY	No.2	SPF
EXCEPT				
D - N	2x4	DRY	No.2	SPF
N - F	2x4	DRY	No.2	SPF

DRY: SEASONED LUMBER.

PLATES (table is in inches)

JT	TYPE	PLATES	W	LEN	Y	X
B	TMVW-t	MT20	5.0	6.0	2.25	2.50
C	TMWW-t	MT20	4.0	4.0	2.00	1.25
D	TTWW+m	MT20	5.0	6.0	2.25	1.50
E	TMW+w	MT20	2.0	4.0		
F	TTWW+m	MT20	5.0	6.0	2.25	1.50
G	TMWW-t	MT20	4.0	4.0	2.00	1.25
H	TMVW-t	MT20	5.0	6.0	2.25	2.50
J	BMV1+p	MT20	3.0	4.0		
K	BMWW-t	MT20	5.0	6.0		
L	BMWW-t	MT20	4.0	4.0		
M	BS-t	MT20	3.0	8.0		
N	BMWWW-t	MT20	4.0	10.0		
O	BS-t	MT20	3.0	8.0		
P	BMWW-t	MT20	4.0	4.0		
Q	BMWW-t	MT20	5.0	6.0		
R	BMV1+p	MT20	3.0	4.0		

NOTES- (1)
1) Lateral braces to be a minimum of 2X4 SPF #2.

DIMENSIONS, SUPPORTS AND LOADINGS SPECIFIED BY FABRICATOR TO BE VERIFIED BY BUILDING DESIGNER

BEARINGS

JT	FACTORED GROSS REACTION VERT	HORZ	MAXIMUM FACTORED GROSS REACTION DOWN	HORZ	UPLIFT	INPUT BRG IN-SX	REQRD BRG IN-SX
R	2180	0	2180	0	0	5-8	5-8
J	2180	0	2180	0	0	5-8	5-8

UNFACTORED REACTIONS

JT	1ST LCASE COMBINED	MAX./MIN. COMPONENT REACTIONS SNOW	LIVE	PERM.LIVE	WIND	DEAD	SOIL
R	1525	1094 / 0	0 / 0	0 / 0	0 / 0	431 / 0	0 / 0
J	1525	1094 / 0	0 / 0	0 / 0	0 / 0	431 / 0	0 / 0

BEARING MATERIAL TO BE SPF NO.2 OR BETTER AT JOINT(S) R, J

BRACING

TOP CHORD TO BE SHEATHED OR MAX. PURLIN SPACING = 4.03 FT.
MAX. UNBRACED BOTTOM CHORD LENGTH = 10.00 FT OR RIGID CEILING DIRECTLY APPLIED.

ALL PITCH BREAKS AND PERIMETER CORNER JOINTS MUST BE LATERALLY RESTRAINED.

1 LATERAL BRACE(S) AT 1/ 2 LENGTH OF E-N.

END VERTICAL(S) MUST BE SHEATHED OR HAVE BRACES AS INDICATED IN THE MAX. UNBRACED LENGTH COLUMN OF THE TABLE BELOW

LOADING

TOTAL LOAD CASES: (4)

CHORDS

MEMB. FR-TO	MAX. FACTORED FORCE (LBS)	FACTORED VERT. LOAD (PLF) FROM	TO	LC1	MAX CSI (LC)	MAX. UNBRAC LENGTH
A- B	0 / 50	-112.4	-112.4	0.15 (1)	10.00	
B- C	-2043 / 0	-112.4	-112.4	0.35 (1)	4.41	
C- D	-1955 / 0	-112.4	-112.4	0.34 (1)	4.50	
D- E	-1848 / 0	-112.4	-112.4	0.67 (1)	4.03	
E- F	-1848 / 0	-112.4	-112.4	0.67 (1)	4.03	
F- G	-1955 / 0	-112.4	-112.4	0.34 (1)	4.50	
G- H	-2043 / 0	-112.4	-112.4	0.35 (1)	4.41	
H- I	0 / 50	-112.4	-112.4	0.15 (1)	10.00	
R- B	-2142 / 0	0.0	0.0	0.23 (1)	5.80	
J- H	-2142 / 0	0.0	0.0	0.23 (1)	5.80	
R- Q	0 / 0	-18.5	-18.5	0.08 (4)	10.00	
Q- P	0 / 1599	-18.5	-18.5	0.32 (1)	10.00	
P- O	0 / 1471	-18.5	-18.5	0.32 (1)	10.00	
O- N	0 / 1471	-18.5	-18.5	0.32 (1)	10.00	
N- M	0 / 1471	-18.5	-18.5	0.32 (1)	10.00	
M- L	0 / 1471	-18.5	-18.5	0.32 (1)	10.00	
L- K	0 / 1599	-18.5	-18.5	0.32 (1)	10.00	
K- J	0 / 0	-18.5	-18.5	0.08 (4)	10.00	

WEBS

MEMB. FR-TO	MAX. FACTORED FORCE (LBS)	MAX CSI (LC)
Q- C	-373 / 0	0.17 (1)
C- P	-198 / 0	0.17 (1)
P- D	0 / 253	0.06 (1)
D- N	0 / 634	0.10 (1)
N- E	-897 / 0	0.48 (1)
N- F	0 / 634	0.10 (1)
L- F	0 / 253	0.06 (1)
L- G	-198 / 0	0.17 (1)
K- G	-373 / 0	0.17 (1)
B- Q	0 / 1662	0.37 (1)
K- H	0 / 1662	0.37 (1)

DESIGN CRITERIA

SPECIFIED LOADS:

TOP CH.	LL	=	32.5	PSF
	DL	=	6.0	PSF
BOT CH.	LL	=	0.0	PSF
	DL	=	7.4	PSF
TOTAL LOAD		=	45.9	PSF

SPACING = 24.0 IN. C/C

LOADING IN FLAT SECTION BASED ON A SLOPE OF 6.00/12

THIS TRUSS IS DESIGNED FOR RESIDENTIAL OR SMALL BUILDING REQUIREMENTS OF PART 9, NBCC 2015

THIS DESIGN COMPLIES WITH:
- PART 9 OF BCBC 2018 , ABC 2019
- PART 9 OF OBC 2012 (2019 AMENDMENT)
- CSA 086-14
- TPIC 2014

(55 % OF 43.9 P.S.F. G.S.L. PLUS 8.4 P.S.F. RAIN LOAD) EQUALS 32.5 P.S.F. SPECIFIED ROOF LIVE LOAD

ALLOWABLE DEFL.(LL)= L/360 (1.03")
CALCULATED VERT. DEFL.(LL) = L/ 999 (0.07")
ALLOWABLE DEFL.(TL)= L/360 (1.03")
CALCULATED VERT. DEFL.(TL) = L/ 999 (0.14")

CSI: TC=0.67/1.00 (D-E:1) , BC=0.32/1.00 (L-N:1) , WB=0.48/1.00 (E-N:1) , SSI=0.35/1.00 (D-E:1)

DOL LUMBER=1.00 NAIL=1.00 LS BEND=1.10 COMP=1.10 SHEAR=1.10 TENS= 1.10

COMPANION LIVE LOAD FACTOR = 1.00

TRUSS PLATE MANUFACTURER IS NOT RESPONSIBLE FOR QUALITY CONTROL IN THE TRUSS MANUFACTURING PLANT .

NAIL VALUES

PLATE	GRIP(DRY) (PSI) MAX	MIN	SHEAR (PLI) MAX	MIN	SECTION (PLI) MAX	MIN
MT20	650	371	1747	788	1987	1873

PLATE PLACEMENT TOL. = 0.250 inches

PLATE ROTATION TOL. = 5.0 Deg.

JSI GRIP= 0.86 (B) (INPUT = 0.90)
JSI METAL= 0.52 (B) (INPUT = 1.00)

LICENSED PROFESSIONAL ENGINEER
06-24-22
H. J. G. ALVES
100009024
PROVINCE OF ONTARIO

Structural component only
DWG# T-2215285

REVIEWED

JOB NAME	TRUSS NAME	QUANTITY	PLY	JOB DESC.	DRWG NO.
423610	T13	5	1	BAYVIEW WELLINGTON TRUSS DESC.	

Tamarack Roof Truss, Burlington

Version 8.530 S Feb 23 2022 MiTek Industries, Inc. Fri Jun 24 13:52:33 2022 Page 1
ID:c3jyj23uDijq_8pvRKbkZpy75XW-nUGvKo8O6cR9D_YZVOyqDk1Xpk9ltW3UFj9QSBz33aS

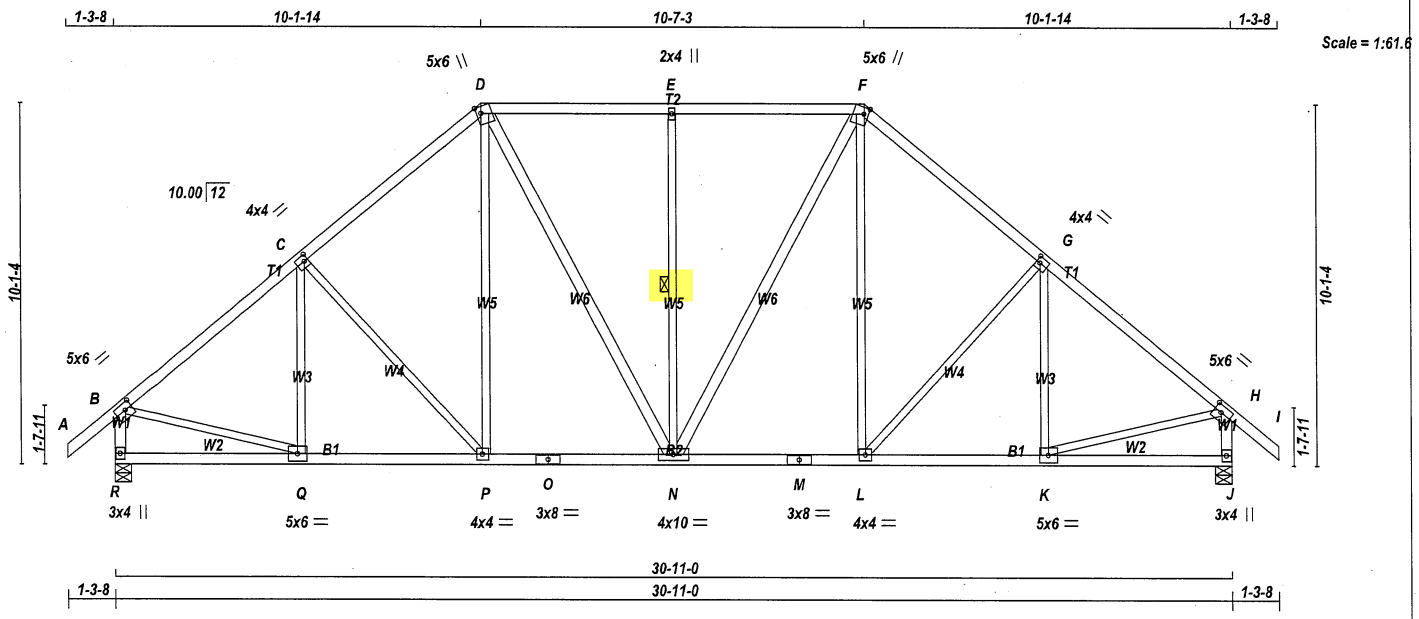

TOTAL WEIGHT = 5 X 161 = 805 lb

LUMBER
N. L. G. A. RULES

CHORDS	SIZE		LUMBER	DESCR.
A - D	2x4	DRY	No.2	SPF
D - F	2x4	DRY	No.2	SPF
F - I	2x4	DRY	No.2	SPF
R - B	2x4	DRY	No.2	SPF
J - H	2x4	DRY	No.2	SPF
R - O	2x4	DRY	No.2	SPF
O - M	2x4	DRY	No.2	SPF
M - J	2x4	DRY	No.2	SPF
ALL WEBS EXCEPT	2x3	DRY	No.2	SPF
D - N	2x4	DRY	No.2	SPF
N - F	2x4	DRY	No.2	SPF

DRY: SEASONED LUMBER.

PLATES (table is in inches)

JT	TYPE	PLATES	W	LEN	Y	X
B	TMVW-t	MT20	5.0	6.0	2.25	2.50
C	TMWW-t	MT20	4.0	4.0	2.00	1.25
D	TTWW+m	MT20	5.0	6.0	2.25	1.50
E	TMW+w	MT20	2.0	4.0		
F	TTWW+m	MT20	5.0	6.0	2.25	1.50
G	TMWW-t	MT20	4.0	4.0	2.00	1.25
H	TMVW-t	MT20	5.0	6.0	2.25	2.50
J	BMV1+p	MT20	3.0	4.0		
K	BMWW-t	MT20	5.0	6.0		
L	BMWW-t	MT20	4.0	4.0		
M	BS-t	MT20	3.0	8.0		
N	BMWWW-t	MT20	4.0	10.0		
O	BS-t	MT20	3.0	8.0		
P	BMWW-t	MT20	4.0	4.0		
Q	BMWW-t	MT20	5.0	6.0		
R	BMV1+p	MT20	3.0	4.0		

NOTES- (1)
1) Lateral braces to be a minimum of 2X4 SPF #2.

DIMENSIONS, SUPPORTS AND LOADINGS SPECIFIED BY FABRICATOR TO BE VERIFIED BY BUILDING DESIGNER

BEARINGS

JT	FACTORED GROSS REACTION VERT	HORZ	MAXIMUM FACTORED GROSS REACTION DOWN	HORZ	UPLIFT	INPUT BRG IN-SX	REQRD BRG IN-SX
R	2180	0	2180	0	0	5-8	5-8
J	2180	0	2180	0	0	5-8	5-8

UNFACTORED REACTIONS

JT	1ST LCASE COMBINED	MAX./MIN. COMPONENT REACTIONS SNOW	LIVE	PERM.LIVE	WIND	DEAD	SOIL
R	1525	1094 / 0	0 / 0	0 / 0	0 / 0	431 / 0	0 / 0
J	1525	1094 / 0	0 / 0	0 / 0	0 / 0	431 / 0	0 / 0

BEARING MATERIAL TO BE SPF NO.2 OR BETTER AT JOINT(S) R, J

BRACING
TOP CHORD TO BE SHEATHED OR MAX. PURLIN SPACING = 4.27 FT.
MAX. UNBRACED BOTTOM CHORD LENGTH = 10.00 FT OR RIGID CEILING DIRECTLY APPLIED.

ALL PITCH BREAKS AND PERIMETER CORNER JOINTS MUST BE LATERALLY RESTRAINED.

1 LATERAL BRACE(S) AT 1/ 2 LENGTH OF E-N.

END VERTICAL(S) MUST BE SHEATHED OR HAVE BRACES AS INDICATED IN THE MAX. UNBRACED LENGTH COLUMN OF THE TABLE BELOW

LOADING
TOTAL LOAD CASES: (4)

CHORDS

MEMB. FR-TO	MAX. FACTORED FORCE (LBS)	FACTORED VERT. LOAD LC1 (PLF) FROM	TO	MAX CSI (LC)	MAX. UNBRAC LENGTH
A- B	0 / 50	-112.4	-112.4	0.15 (1)	10.00
B- C	-2068 / 0	-112.4	-112.4	0.46 (1)	4.27
C- D	-1886 / 0	-112.4	-112.4	0.44 (1)	4.45
D- E	-1637 / 0	-112.4	-112.4	0.44 (1)	4.68
E- F	-1637 / 0	-112.4	-112.4	0.44 (1)	4.68
F- G	-1886 / 0	-112.4	-112.4	0.44 (1)	4.45
G- H	-2068 / 0	-112.4	-112.4	0.46 (1)	4.27
H- I	0 / 50	-112.4	-112.4	0.15 (1)	10.00
R- B	-2139 / 0	0.0	0.0	0.23 (1)	5.80
J- H	-2139 / 0	0.0	0.0	0.23 (1)	5.80
R- Q	0 / 0	-18.5	-18.5	0.11 (4)	10.00
Q- P	0 / 1621	-18.5	-18.5	0.31 (1)	10.00
P- O	0 / 1414	-18.5	-18.5	0.28 (1)	10.00
O- N	0 / 1414	-18.5	-18.5	0.28 (1)	10.00
N- M	0 / 1414	-18.5	-18.5	0.28 (1)	10.00
M- L	0 / 1414	-18.5	-18.5	0.28 (1)	10.00
L- K	0 / 1621	-18.5	-18.5	0.31 (1)	10.00
K- J	0 / 0	-18.5	-18.5	0.11 (4)	10.00

WEBS

MEMB. FR-TO	MAX. FACTORED FORCE (LBS)	MAX CSI (LC)
Q- C	-306 / 2	0.17 (1)
C- P	-314 / 0	0.36 (1)
P- D	0 / 328	0.07 (1)
D- N	0 / 468	0.08 (1)
N- E	-725 / 0	0.51 (1)
N- F	0 / 468	0.08 (1)
F- M	0 / 328	0.07 (1)
L- G	-314 / 0	0.36 (1)
K- G	-306 / 2	0.17 (1)
B- Q	0 / 1672	0.38 (1)
K- H	0 / 1672	0.38 (1)

DESIGN CRITERIA

SPECIFIED LOADS:

TOP CH.	LL	=	32.5	PSF
	DL	=	6.0	PSF
BOT CH.	LL	=	0.0	PSF
	DL	=	7.4	PSF
TOTAL LOAD		=	45.9	PSF

SPACING = 24.0 IN. C/C

LOADING IN FLAT SECTION BASED ON A SLOPE OF 6.00/12

THIS TRUSS IS DESIGNED FOR RESIDENTIAL OR SMALL BUILDING REQUIREMENTS OF PART 9, NBCC 2015

THIS DESIGN COMPLIES WITH:
- PART 9 OF BCBC 2018 , ABC 2019
- PART 9 OF OBC 2012 (2019 AMENDMENT)
- CSA 086-14
- TPIC 2014

(55 % OF 43.9 P.S.F. G.S.L. PLUS 8.4 P.S.F. RAIN LOAD) EQUALS 32.5 P.S.F. SPECIFIED ROOF LIVE LOAD

ALLOWABLE DEFL.(LL)= L/360 (1.03")
CALCULATED VERT. DEFL.(LL) = L/ 999 (0.07")
ALLOWABLE DEFL.(TL)= L/360 (1.03")
CALCULATED VERT. DEFL.(TL) = L/ 999 (0.12")

CSI: TC=0.46/1.00 (G-H:1) , BC=0.31/1.00 (K-L:1) , WB=0.51/1.00 (E-N:1) , SSI=0.29/1.00 (D-E:1)

DOL LUMBER=1.00 NAIL=1.00 LS BEND=1.10 COMP=1.10 SHEAR=1.10 TENS= 1.10

COMPANION LIVE LOAD FACTOR = 1.00

TRUSS PLATE MANUFACTURER IS NOT RESPONSIBLE FOR QUALITY CONTROL IN THE TRUSS MANUFACTURING PLANT .

NAIL VALUES

PLATE	GRIP(DRY) (PSI) MAX	MIN	SHEAR (PLI) MAX	MIN	SECTION (PLI) MAX	MIN
MT20	650	371	1747	788	1987	1873

PLATE PLACEMENT TOL. = 0.250 inches

PLATE ROTATION TOL. = 5.0 Deg.

JSI GRIP= 0.86 (H) (INPUT = 0.90)
JSI METAL= 0.54 (H) (INPUT = 1.00)

LICENSED PROFESSIONAL ENGINEER
06-24-22
H. J. G. ALVES
100009024
PROVINCE OF ONTARIO

Structural component only
DWG# T-2215286

REVIEWED

JOB NAME	TRUSS NAME	QUANTITY	PLY	JOB DESC.	DRWG NO.
423610	T14	2	1	BAYVIEW WELLINGTON TRUSS DESC.	

Tamarack Roof Truss, Burlington

Version 8.530 S Feb 23 2022 MiTek Industries, Inc. Fri Jun 24 13:52:34 2022 Page 1
ID:c3jyj23uDijq_8pvRKbkZpy75XW-FgqHX891tvZ0q87I36U3mxagV8Udc?KdUNvz_dz33aR

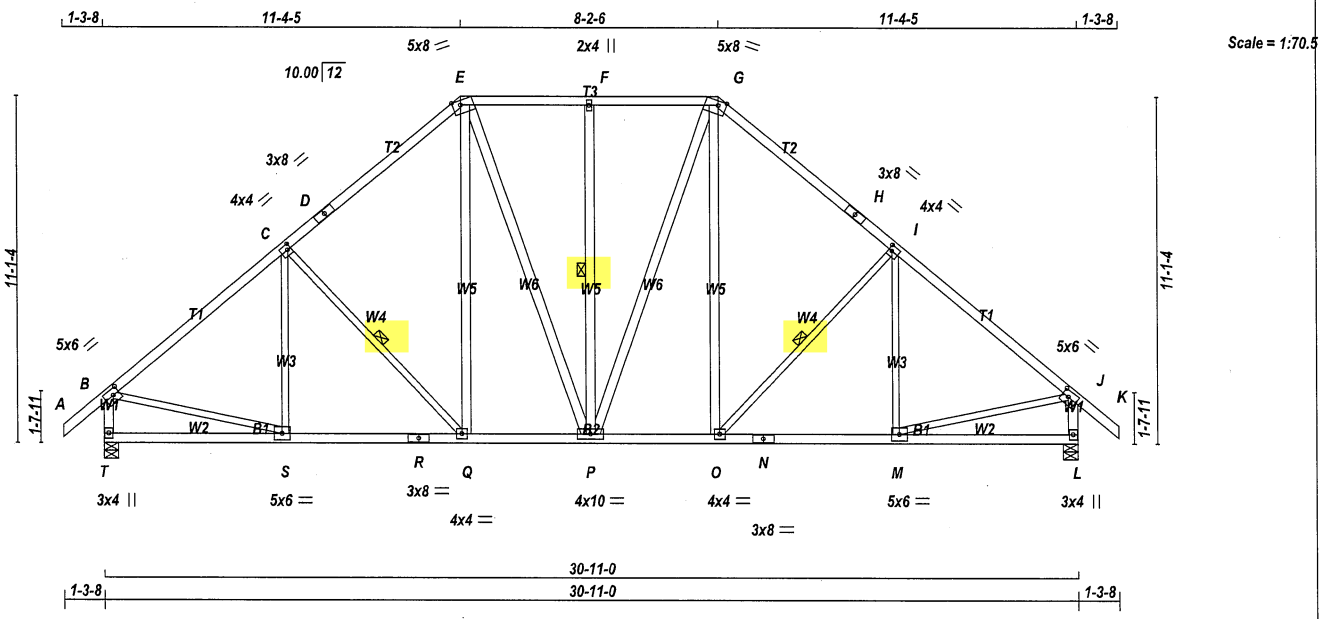

TOTAL WEIGHT = 2 X 179 = 357 lb

LUMBER
N. L. G. A. RULES

CHORDS	SIZE		LUMBER	DESCR.
A - D	2x4	DRY	No.2	SPF
D - E	2x4	DRY	No.2	SPF
E - G	2x4	DRY	No.2	SPF
G - H	2x4	DRY	No.2	SPF
H - K	2x4	DRY	No.2	SPF
T - B	2x4	DRY	No.2	SPF
L - J	2x4	DRY	No.2	SPF
T - R	2x4	DRY	No.2	SPF
R - N	2x4	DRY	No.2	SPF
N - L	2x4	DRY	No.2	SPF
ALL WEBS	2x4	DRY	No.2	SPF
EXCEPT				
S - C	2x3	DRY	No.2	SPF
C - Q	2x3	DRY	No.2	SPF
O - I	2x3	DRY	No.2	SPF
M - I	2x3	DRY	No.2	SPF
B - S	2x3	DRY	No.2	SPF
M - J	2x3	DRY	No.2	SPF

DRY: SEASONED LUMBER.

PLATES (table is in inches)

JT	TYPE	PLATES	W	LEN	Y	X
B	TMVW-t	MT20	5.0	6.0	2.25	2.50
C	TMWW-t	MT20	4.0	4.0	2.00	1.25
D	TS-t	MT20	3.0	8.0		
E	TTWW-m	MT20	5.0	8.0	Edge	3.00
F	TMW+w	MT20	2.0	4.0		
G	TTWW-m	MT20	5.0	8.0	Edge	3.00
H	TS-t	MT20	3.0	8.0		
I	TMWW-t	MT20	4.0	4.0	2.00	1.25
J	TMVW-t	MT20	5.0	6.0	2.25	2.50
L	BMV1+p	MT20	3.0	4.0		
M	BMWW-t	MT20	5.0	6.0		
N	BS-t	MT20	3.0	8.0		
O	BMWW-t	MT20	4.0	4.0		
P	BMWWW-t	MT20	4.0	10.0		
Q	BMWW-t	MT20	4.0	4.0		
R	BS-t	MT20	3.0	8.0		
S	BMWW-t	MT20	5.0	6.0		
T	BMV1+p	MT20	3.0	4.0		

LICENSED PROFESSIONAL ENGINEER
06-24-22
H. J. G. ALVES
100009024
PROVINCE OF ONTARIO

Structural component only
DWG# T-2215287

DIMENSIONS, SUPPORTS AND LOADINGS SPECIFIED BY FABRICATOR TO BE VERIFIED BY BUILDING DESIGNER

BEARINGS

JT	FACTORED GROSS REACTION VERT	HORZ	MAXIMUM FACTORED GROSS REACTION DOWN	HORZ	UPLIFT	INPUT BRG IN-SX	REQRD BRG IN-SX
T	2180	0	2180	0	0	5-8	5-8
L	2180	0	2180	0	0	5-8	5-8

UNFACTORED REACTIONS

JT	1ST LCASE COMBINED	MAX./MIN. COMPONENT REACTIONS SNOW	LIVE	PERM.LIVE	WIND	DEAD	SOIL
T	1525	1094 / 0	0 / 0	0 / 0	0 / 0	431 / 0	0 / 0
L	1525	1094 / 0	0 / 0	0 / 0	0 / 0	431 / 0	0 / 0

BEARING MATERIAL TO BE SPF NO.2 OR BETTER AT JOINT(S) T, L

BRACING
TOP CHORD TO BE SHEATHED OR MAX. PURLIN SPACING = 4.08 FT.
MAX. UNBRACED BOTTOM CHORD LENGTH = 10.00 FT OR RIGID CEILING DIRECTLY APPLIED.

ALL PITCH BREAKS AND PERIMETER CORNER JOINTS MUST BE LATERALLY RESTRAINED.

1 LATERAL BRACE(S) AT 1/ 2 LENGTH OF C-Q, F-P, I-O.

END VERTICAL(S) MUST BE SHEATHED OR HAVE BRACES AS INDICATED IN THE MAX. UNBRACED LENGTH COLUMN OF THE TABLE BELOW

LOADING
TOTAL LOAD CASES: (4)

CHORDS

MEMB. FR-TO	MAX. FACTORED FORCE (LBS)	FACTORED VERT. LOAD (PLF) FROM	TO	LC1	MAX CSI (LC)	MAX. UNBRAC LENGTH
A- B	0 / 50	-112.4	-112.4	0.15 (1)	10.00	
B- C	-2079 / 0	-112.4	-112.4	0.59 (1)	4.08	
C- D	-1807 / 0	-112.4	-112.4	0.55 (1)	4.37	
D- E	-1807 / 0	-112.4	-112.4	0.55 (1)	4.37	
E- F	-1468 / 0	-112.4	-112.4	0.26 (1)	5.13	
F- G	-1468 / 0	-112.4	-112.4	0.26 (1)	5.13	
G- H	-1807 / 0	-112.4	-112.4	0.55 (1)	4.37	
H- I	-1807 / 0	-112.4	-112.4	0.55 (1)	4.37	
I- J	-2079 / 0	-112.4	-112.4	0.59 (1)	4.08	
J- K	0 / 50	-112.4	-112.4	0.15 (1)	10.00	
T- B	-2135 / 0	0.0	0.0	0.23 (1)	5.81	
L- J	-2135 / 0	0.0	0.0	0.23 (1)	5.81	
T- S	0 / 0	-18.5	-18.5	0.15 (4)	10.00	
S- R	0 / 1635	-18.5	-18.5	0.33 (1)	10.00	
R- Q	0 / 1635	-18.5	-18.5	0.33 (1)	10.00	
Q- P	0 / 1352	-18.5	-18.5	0.27 (1)	10.00	
P- O	0 / 1352	-18.5	-18.5	0.27 (1)	10.00	
O- N	0 / 1635	-18.5	-18.5	0.33 (1)	10.00	
N- M	0 / 1635	-18.5	-18.5	0.33 (1)	10.00	
M- L	0 / 0	-18.5	-18.5	0.15 (4)	10.00	

WEBS

MEMB. FR-TO	MAX. FACTORED FORCE (LBS)	MAX CSI (LC)
S- C	-250 / 32	0.17 (1)
C- Q	-423 / 0	0.20 (1)
Q- E	0 / 401	0.06 (1)
E- P	0 / 329	0.05 (1)
P- F	-553 / 0	0.35 (1)
P- G	0 / 329	0.05 (1)
O- G	0 / 401	0.06 (1)
O- I	-423 / 0	0.20 (1)
M- I	-250 / 32	0.17 (1)
B- S	0 / 1676	0.38 (1)
M- J	0 / 1676	0.38 (1)

[M][F]

DESIGN CRITERIA

SPECIFIED LOADS:

TOP CH.	LL	=	32.5	PSF
	DL	=	6.0	PSF
BOT CH.	LL	=	0.0	PSF
	DL	=	7.4	PSF
TOTAL LOAD		=	45.9	PSF

SPACING = 24.0 IN. C/C

LOADING IN FLAT SECTION BASED ON A SLOPE OF 6.00/12

THIS TRUSS IS DESIGNED FOR RESIDENTIAL OR SMALL BUILDING REQUIREMENTS OF PART 9, NBCC 2015

THIS DESIGN COMPLIES WITH:
- PART 9 OF BCBC 2018 , ABC 2019
- PART 9 OF OBC 2012 (2019 AMENDMENT)
- CSA 086-14
- TPIC 2014

(55 % OF 43.9 P.S.F. G.S.L. PLUS 8.4 P.S.F. RAIN LOAD) EQUALS 32.5 P.S.F. SPECIFIED ROOF LIVE LOAD

ALLOWABLE DEFL.(LL)= L/360 (1.03")
CALCULATED VERT. DEFL.(LL) = L/ 999 (0.07")
ALLOWABLE DEFL.(TL)= L/360 (1.03")
CALCULATED VERT. DEFL.(TL) = L/ 999 (0.12")

CSI: TC=0.59/1.00 (I-J:1) , BC=0.33/1.00 (M-O:1) , WB=0.38/1.00 (J-M:1) , SSI=0.24/1.00 (I-J:1)

DOL LUMBER=1.00 NAIL=1.00 LS BEND=1.10 COMP=1.10 SHEAR=1.10 TENS= 1.10

COMPANION LIVE LOAD FACTOR = 1.00

TRUSS PLATE MANUFACTURER IS NOT RESPONSIBLE FOR QUALITY CONTROL IN THE TRUSS MANUFACTURING PLANT .

NAIL VALUES

PLATE	GRIP(DRY) (PSI) MAX	MIN	SHEAR (PLI) MAX	MIN	SECTION (PLI) MAX	MIN
MT20	650	371	1747	788	1987	1873

PLATE PLACEMENT TOL. = 0.250 inches

PLATE ROTATION TOL. = 5.0 Deg.

JSI GRIP= 0.86 (J) (INPUT = 0.90)
JSI METAL= 0.54 (J) (INPUT = 1.00)

REVIEWED

CONTINUED ON PAGE 2

Edge - INDICATES REFERENCE CORNER OF PLATE TOUCHES EDGE OF CHORD.

NOTES- (1)
1) Lateral braces to be a minimum of 2X4 SPF #2.

LICENSED PROFESSIONAL ENGINEER
06-24-22
H. J. G. ALVES
100009024
PROVINCE OF ONTARIO

Structural component only
DWG# T-2215287

REVIEWED

JOB NAME	TRUSS NAME	QUANTITY	PLY	JOB DESC.	DRWG NO.
423610	T15	2	1	BAYVIEW WELLINGTON TRUSS DESC.	

Tamarack Roof Truss, Burlington

Version 8.530 S Feb 23 2022 MiTek Industries, Inc. Fri Jun 24 13:52:34 2022 Page 1
ID:c3jyj23uDijq_8pvRKbkZpy75XW-FgqHX891tvZ0q87l36U3mxag58UocyjdUNvz_dz33aR

Scale = 1:67.0

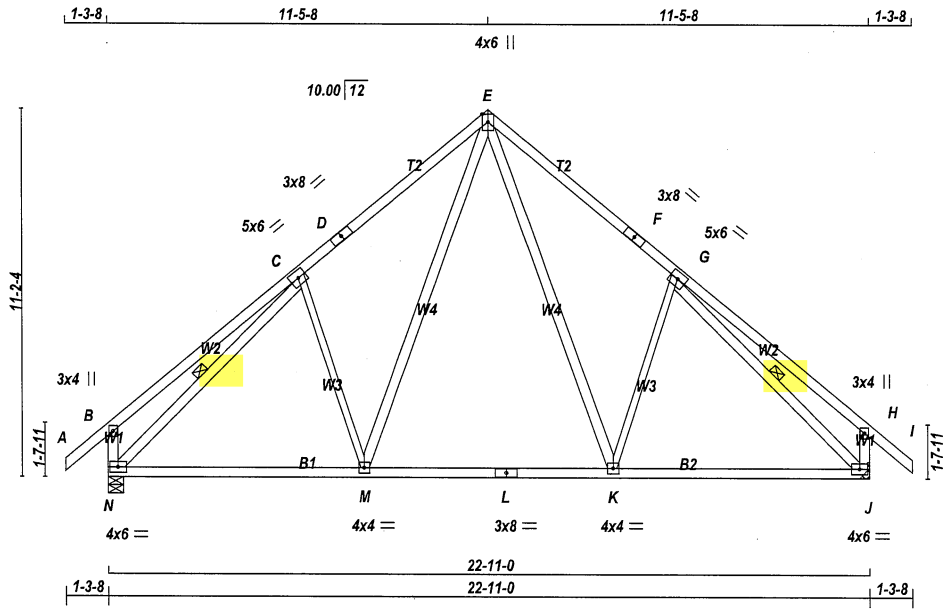

TOTAL WEIGHT = 2 X 121 = 242 lb

[M][F]

LUMBER

N. L. G. A. RULES

CHORDS	SIZE		LUMBER	DESCR.
A - D	2x4	DRY	No.2	SPF
D - E	2x4	DRY	No.2	SPF
E - F	2x4	DRY	No.2	SPF
F - I	2x4	DRY	No.2	SPF
N - B	2x4	DRY	No.2	SPF
J - H	2x4	DRY	No.2	SPF
N - L	2x4	DRY	No.2	SPF
L - J	2x4	DRY	No.2	SPF
ALL WEBS EXCEPT	2x4	DRY	No.2	SPF
K - G	2x3	DRY	No.2	SPF
C - M	2x3	DRY	No.2	SPF

DRY: SEASONED LUMBER.

PLATES (table is in inches)

JT	TYPE	PLATES	W	LEN	Y	X
B	TMV+p	MT20	3.0	4.0		
C	TMWW-t	MT20	5.0	6.0		
D	TS-t	MT20	3.0	8.0		
E	TTWW+p	MT20	4.0	6.0	Edge	
F	TS-t	MT20	3.0	8.0		
G	TMWW-t	MT20	5.0	6.0		
H	TMV+p	MT20	3.0	4.0		
J	BMVW1-t	MT20	4.0	6.0		
K	BMWW-t	MT20	4.0	4.0		
L	BS-t	MT20	3.0	8.0		
M	BMWW-t	MT20	4.0	4.0		
N	BMVW1-t	MT20	4.0	6.0		

Edge - INDICATES REFERENCE CORNER OF PLATE TOUCHES EDGE OF CHORD.

NOTES- (1)
1) Lateral braces to be a minimum of 2X4 SPF #2.

DIMENSIONS, SUPPORTS AND LOADINGS SPECIFIED BY FABRICATOR TO BE VERIFIED BY BUILDING DESIGNER

BEARINGS

JT	FACTORED GROSS REACTION VERT	HORZ	MAXIMUM FACTORED GROSS REACTION DOWN	HORZ	UPLIFT	INPUT BRG	REQRD BRG
N	1656	0	1656	0	0	IN-SX	IN-SX
J	1656	0	1656	0	0	MECHANICAL	

A SUITABLE HANGER/MECHANICAL CONNECTION IS REQUIRED AT JOINT J. MINIMUM BEARING LENGTH AT JOINT J = 3-8.

UNFACTORED REACTIONS

JT	1ST LCASE COMBINED	MAX./MIN. COMPONENT REACTIONS SNOW	LIVE	PERM.LIVE	WIND	DEAD	SOIL
N	1158	834 / 0	0 / 0	0 / 0	0 / 0	324 / 0	0 / 0
J	1158	834 / 0	0 / 0	0 / 0	0 / 0	324 / 0	0 / 0

BEARING MATERIAL TO BE SPF NO.2 OR BETTER AT JOINT(S) N

BRACING

TOP CHORD TO BE SHEATHED OR MAX. PURLIN SPACING = 4.94 FT.
MAX. UNBRACED BOTTOM CHORD LENGTH = 10.00 FT OR RIGID CEILING DIRECTLY APPLIED.

ALL PITCH BREAKS AND PERIMETER CORNER JOINTS MUST BE LATERALLY RESTRAINED.

1 LATERAL BRACE(S) AT 1/ 2 LENGTH OF C-N, G-J.

END VERTICAL(S) MUST BE SHEATHED OR HAVE BRACES AS INDICATED IN THE MAX. UNBRACED LENGTH COLUMN OF THE TABLE BELOW

LOADING

TOTAL LOAD CASES: (4)

CHORDS

MEMB. FR-TO	MAX. FACTORED FORCE (LBS)	FACTORED VERT. LOAD (PLF) FROM	TO	LC1	MAX CSI (LC)	MAX. UNBRAC LENGTH
A- B	0 / 50	-112.4	-112.4	0.15 (1)	10.00	
B- C	0 / 51	-112.4	-112.4	0.62 (1)	10.00	
C- D	-1335 / 0	-112.4	-112.4	0.53 (1)	4.94	
D- E	-1335 / 0	-112.4	-112.4	0.53 (1)	4.94	
E- F	-1335 / 0	-112.4	-112.4	0.53 (1)	4.94	
F- G	-1335 / 0	-112.4	-112.4	0.53 (1)	4.94	
G- H	0 / 51	-112.4	-112.4	0.62 (1)	10.00	
H- I	0 / 50	-112.4	-112.4	0.15 (1)	10.00	
N- B	-395 / 0	0.0	0.0	0.04 (1)	7.81	
J- H	-395 / 0	0.0	0.0	0.04 (1)	7.81	
N- M	0 / 1131	-18.5	-18.5	0.32 (4)	10.00	
M- L	0 / 789	-18.5	-18.5	0.30 (4)	10.00	
L- K	0 / 789	-18.5	-18.5	0.30 (4)	10.00	
K- J	0 / 1131	-18.5	-18.5	0.32 (4)	10.00	

WEBS

MEMB. FR-TO	MAX. FACTORED FORCE (LBS)	MAX CSI (LC)
E- K	0 / 608	0.10 (1)
K- G	-445 / 0	0.34 (1)
M- E	0 / 608	0.10 (1)
C- M	-445 / 0	0.34 (1)
N- C	-1651 / 0	0.54 (1)
G- J	-1651 / 0	0.54 (1)

DESIGN CRITERIA

SPECIFIED LOADS:

TOP CH.	LL	=	32.5	PSF
	DL	=	6.0	PSF
BOT CH.	LL	=	0.0	PSF
	DL	=	7.4	PSF
TOTAL LOAD		=	45.9	PSF

SPACING = 24.0 IN. C/C

THIS TRUSS IS DESIGNED FOR RESIDENTIAL OR SMALL BUILDING REQUIREMENTS OF PART 9, NBCC 2015

THIS DESIGN COMPLIES WITH:
- PART 9 OF BCBC 2018 , ABC 2019
- PART 9 OF OBC 2012 (2019 AMENDMENT)
- CSA 086-14
- TPIC 2014

(55 % OF 43.9 P.S.F. G.S.L. PLUS 8.4 P.S.F. RAIN LOAD) EQUALS 32.5 P.S.F. SPECIFIED ROOF LIVE LOAD

ALLOWABLE DEFL.(LL)= L/360 (0.76")
CALCULATED VERT. DEFL.(LL) = L/ 999 (0.04")
ALLOWABLE DEFL.(TL)= L/360 (0.76")
CALCULATED VERT. DEFL.(TL) = L/ 999 (0.12")

CSI: TC=0.62/1.00 (B-C:1) , BC=0.32/1.00 (M-N:4) , WB=0.54/1.00 (C-N:1) , SSI=0.24/1.00 (E-G:1)

DOL LUMBER=1.00 NAIL=1.00 LS BEND=1.10 COMP=1.10 SHEAR=1.10 TENS= 1.10

COMPANION LIVE LOAD FACTOR = 1.00

AUTOSOLVE HEELS OFF

TRUSS PLATE MANUFACTURER IS NOT RESPONSIBLE FOR QUALITY CONTROL IN THE TRUSS MANUFACTURING PLANT .

NAIL VALUES

PLATE	GRIP(DRY) (PSI) MAX	MIN	SHEAR (PLI) MAX	MIN	SECTION (PLI) MAX	MIN
MT20	650	371	1747	788	1987	1873

PLATE PLACEMENT TOL. = 0.250 inches

PLATE ROTATION TOL. = 5.0 Deg.

JSI GRIP= 0.90 (G) (INPUT = 0.90)
JSI METAL= 0.41 (C) (INPUT = 1.00)

LICENSED PROFESSIONAL ENGINEER
06-24-22
H. J. G. ALVES
100009024
PROVINCE OF ONTARIO

Structural component only
DWG# T-2215288

REVIEWED

JOB NAME	TRUSS NAME	QUANTITY	PLY	JOB DESC.	DRWG NO.
423610	T16	1	1	BAYVIEW WELLINGTON TRUSS DESC.	

Tamarack Roof Truss, Burlington

Version 8.530 S Feb 23 2022 MiTek Industries, Inc. Fri Jun 24 13:52:35 2022 Page 1
ID:c3jyj23uDijq_8pvRKbkZpy75XW-jtOfkUAfeDhtSHiycp?Il96ueYtbLWDnj1eXW3z33aQ

Scale = 1:38.4

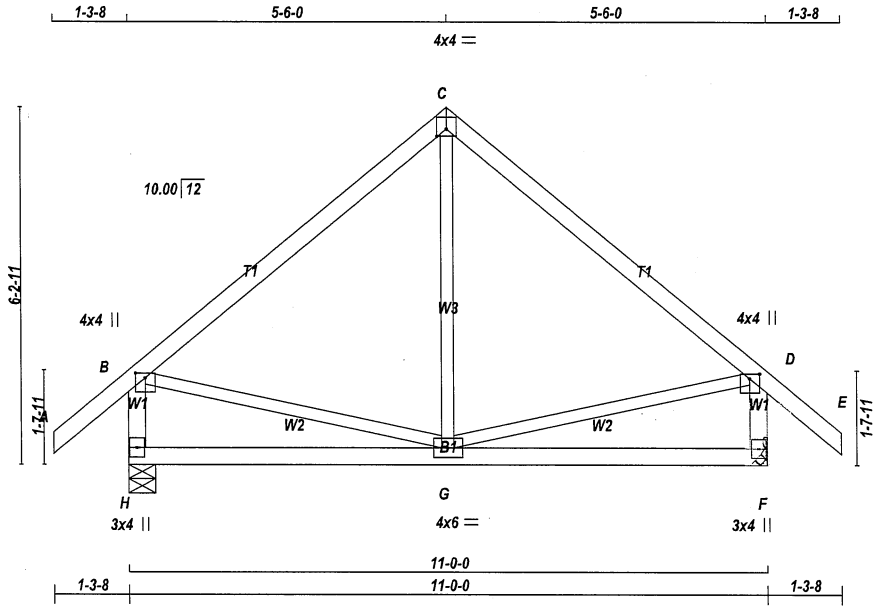

TOTAL WEIGHT = 49 lb

[M][F]

LUMBER

N. L. G. A. RULES

CHORDS	SIZE		LUMBER	DESCR.
A - C	2x4	DRY	No.2	SPF
C - E	2x4	DRY	No.2	SPF
H - B	2x4	DRY	No.2	SPF
F - D	2x4	DRY	No.2	SPF
H - F	2x4	DRY	No.2	SPF
ALL WEBS EXCEPT	2x3	DRY	No.2	SPF

DRY: SEASONED LUMBER.

PLATES (table is in inches)

JT	TYPE	PLATES	W	LEN	Y	X
B	TMVW+p	MT20	4.0	4.0	1.00	2.00
C	TTW-p	MT20	4.0	4.0	1.50	2.00
D	TMVW+p	MT20	4.0	4.0	1.00	2.00
F	BMV1+p	MT20	3.0	4.0		
G	BMWWW-t	MT20	4.0	6.0		
H	BMV1+p	MT20	3.0	4.0		

NOTES- (1)
1) Lateral braces to be a minimum of 2X4 SPF #2.

DIMENSIONS, SUPPORTS AND LOADINGS SPECIFIED BY FABRICATOR TO BE VERIFIED BY BUILDING DESIGNER

BEARINGS

JT	FACTORED GROSS REACTION VERT	HORZ	MAXIMUM FACTORED GROSS REACTION DOWN	HORZ	UPLIFT	INPUT BRG IN-SX	REQRD BRG IN-SX
H	876	0	876	0	0	5-8	5-8
F	876	0	876	0	0	MECHANICAL	

A SUITABLE HANGER/MECHANICAL CONNECTION IS REQUIRED AT JOINT F. MINIMUM BEARING LENGTH AT JOINT F = 3-8.

UNFACTORED REACTIONS

JT	1ST LCASE COMBINED	MAX./MIN. COMPONENT REACTIONS SNOW	LIVE	PERM.LIVE	WIND	DEAD	SOIL
H	611	447 / 0	0 / 0	0 / 0	0 / 0	164 / 0	0 / 0
F	611	447 / 0	0 / 0	0 / 0	0 / 0	164 / 0	0 / 0

BEARING MATERIAL TO BE SPF NO.2 OR BETTER AT JOINT(S) H

BRACING

TOP CHORD TO BE SHEATHED OR MAX. PURLIN SPACING = 6.25 FT.
MAX. UNBRACED BOTTOM CHORD LENGTH = 10.00 FT OR RIGID CEILING DIRECTLY APPLIED.

ALL PITCH BREAKS AND PERIMETER CORNER JOINTS MUST BE LATERALLY RESTRAINED.

LOADING

TOTAL LOAD CASES: (4)

CHORDS

MEMB. FR-TO	MAX. FACTORED FORCE (LBS)	FACTORED VERT. LOAD (PLF) FROM	TO	LC1 CSI (LC)	MAX UNBRAC LENGTH
A- B	0 / 50	-112.4	-112.4	0.15 (1)	10.00
B- C	-452 / 0	-112.4	-112.4	0.44 (1)	6.25
C- D	-452 / 0	-112.4	-112.4	0.44 (1)	6.25
D- E	0 / 50	-112.4	-112.4	0.15 (1)	10.00
H- B	-837 / 0	0.0	0.0	0.09 (1)	7.81
F- D	-837 / 0	0.0	0.0	0.09 (1)	7.81
H- G	0 / 0	-18.5	-18.5	0.16 (4)	10.00
G- F	0 / 0	-18.5	-18.5	0.16 (4)	10.00

WEBS

MEMB. FR-TO	MAX. FACTORED FORCE (LBS)	MAX CSI (LC)
G- C	-39 / 90	0.03 (4)
B- G	0 / 357	0.08 (1)
G- D	0 / 357	0.08 (1)

DESIGN CRITERIA

SPECIFIED LOADS:

TOP CH.	LL	=	32.5	PSF
	DL	=	6.0	PSF
BOT CH.	LL	=	0.0	PSF
	DL	=	7.4	PSF
TOTAL LOAD		=	45.9	PSF

SPACING = 24.0 IN. C/C

THIS TRUSS IS DESIGNED FOR RESIDENTIAL OR SMALL BUILDING REQUIREMENTS OF PART 9, NBCC 2015

THIS DESIGN COMPLIES WITH:
- PART 9 OF BCBC 2018 , ABC 2019
- PART 9 OF OBC 2012 (2019 AMENDMENT)
- CSA 086-14
- TPIC 2014

(55 % OF 43.9 P.S.F. G.S.L. PLUS 8.4 P.S.F. RAIN LOAD) EQUALS 32.5 P.S.F. SPECIFIED ROOF LIVE LOAD

ALLOWABLE DEFL.(LL)= L/360 (0.37")
CALCULATED VERT. DEFL.(LL) = L/ 999 (0.01")
ALLOWABLE DEFL.(TL)= L/360 (0.37")
CALCULATED VERT. DEFL.(TL) = L/ 999 (0.02")

CSI: TC=0.44/1.00 (B-C:1) , BC=0.16/1.00 (G-H:4) , WB=0.08/1.00 (D-G:1) , SSI=0.19/1.00 (B-C:1)

DOL LUMBER=1.00 NAIL=1.00 LS BEND=1.10 COMP=1.10 SHEAR=1.10 TENS= 1.10

COMPANION LIVE LOAD FACTOR = 1.00

TRUSS PLATE MANUFACTURER IS NOT RESPONSIBLE FOR QUALITY CONTROL IN THE TRUSS MANUFACTURING PLANT .

NAIL VALUES

PLATE	GRIP(DRY) (PSI) MAX	MIN	SHEAR (PLI) MAX	MIN	SECTION (PLI) MAX	MIN
MT20	650	371	1747	788	1987	1873

PLATE PLACEMENT TOL. = 0.250 inches

PLATE ROTATION TOL. = 5.0 Deg.

JSI GRIP= 0.70 (B) (INPUT = 0.90)
JSI METAL= 0.19 (B) (INPUT = 1.00)

LICENSED PROFESSIONAL ENGINEER
06-24-22
H. J. G. ALVES
100009024
PROVINCE OF ONTARIO

Structural component only
DWG# T-2215289

REVIEWED

JOB NAME	TRUSS NAME	QUANTITY	PLY	JOB DESC.	DRWG NO.
423610	G16	1	1	BAYVIEW WELLINGTON TRUSS DESC.	

Tamarack Roof Truss, Burlington

Version 8.530 S Feb 23 2022 MiTek Industries, Inc. Fri Jun 24 13:52:10 2022 Page 1
ID:c3jyj23uDijq_8pvRKbkZpy75XW-y3OCVxszXXXQyRH8f32RouahNTN?_Cj5ze5i80z33ap

Scale = 1:38.9

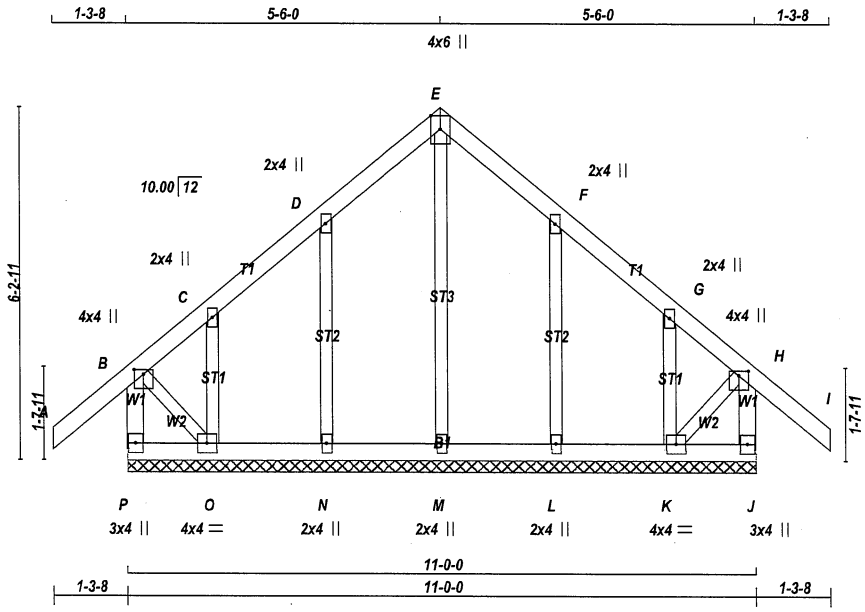

TOTAL WEIGHT = 53 lb
[M]

LUMBER
N. L. G. A. RULES

CHORDS	SIZE		LUMBER	DESCR.
P - B	2x4	DRY	No.2	SPF
A - E	2x4	DRY	No.2	SPF
E - I	2x4	DRY	No.2	SPF
J - H	2x4	DRY	No.2	SPF
P - J	2x4	DRY	No.2	SPF
ALL WEBS	2x3	DRY	No.2	SPF
ALL GABLE WEBS	2x3	DRY	No.2	SPF

DRY: SEASONED LUMBER.

GABLE STUDS SPACED AT 2-0-0 OC.

PLATES (table is in inches)

JT	TYPE	PLATES	W	LEN	Y	X
B	TMVW+p	MT20	4.0	4.0	1.00	2.00
C, D, F, G						
C	TMW+w	MT20	2.0	4.0		
E	TTW+p	MT20	4.0	6.0	Edge	
H	TMVW+p	MT20	4.0	4.0	1.00	2.00
J	BMV1+p	MT20	3.0	4.0		
K	BMWW1-t	MT20	4.0	4.0		
L, M, N						
L	BMW1+w	MT20	2.0	4.0		
O	BMWW1-t	MT20	4.0	4.0		
P	BMV1+p	MT20	3.0	4.0		

Edge - INDICATES REFERENCE CORNER OF PLATE TOUCHES EDGE OF CHORD.

NOTES- (1)
1) Lateral braces to be a minimum of 2X4 SPF #2.

DIMENSIONS, SUPPORTS AND LOADINGS SPECIFIED BY FABRICATOR TO BE VERIFIED BY BUILDING DESIGNER

BEARINGS

THIS TRUSS DESIGNED FOR CONTINUOUS BEARINGS.

THIS TRUSS REQUIRES RIGID SHEATHING ON EXPOSED FACE.

BEARING MATERIAL TO BE SPF NO.2 OR BETTER AT JOINT(S)

BRACING
TOP CHORD TO BE SHEATHED OR MAX. PURLIN SPACING = 6.25 FT.
MAX. UNBRACED BOTTOM CHORD LENGTH = 10.00 FT OR RIGID CEILING DIRECTLY APPLIED.

ALL PITCH BREAKS AND PERIMETER CORNER JOINTS MUST BE LATERALLY RESTRAINED.

LOADING
TOTAL LOAD CASES: (4)

CHORDS

MEMB. FR-TO	MAX. FACTORED FORCE (LBS)	FACTORED VERT. LOAD LC1 (PLF) FROM	TO	MAX CSI (LC)	MAX. UNBRAC LENGTH
P- B	-336 / 0	0.0	0.0	0.04 (1)	7.81
A- B	0 / 50	-112.4	-112.4	0.15 (1)	10.00
B- C	-69 / 0	-112.4	-112.4	0.15 (1)	6.25
C- D	-5 / 0	-112.4	-112.4	0.07 (1)	10.00
D- E	-28 / 0	-112.4	-112.4	0.07 (1)	6.25
E- F	-28 / 0	-112.4	-112.4	0.07 (1)	6.25
F- G	-5 / 0	-112.4	-112.4	0.07 (1)	10.00
G- H	-69 / 0	-112.4	-112.4	0.15 (1)	6.25
H- I	0 / 50	-112.4	-112.4	0.15 (1)	10.00
J- H	-336 / 0	0.0	0.0	0.04 (1)	7.81
P- O	0 / 0	-18.5	-18.5	0.01 (4)	10.00
O- N	0 / 15	-18.5	-18.5	0.02 (4)	10.00
N- M	0 / 9	-18.5	-18.5	0.02 (4)	10.00
M- L	0 / 9	-18.5	-18.5	0.02 (4)	10.00
L- K	0 / 15	-18.5	-18.5	0.02 (4)	10.00
K- J	0 / 0	-18.5	-18.5	0.01 (4)	10.00

WEBS

MEMB. FR-TO	MAX. FACTORED FORCE (LBS)	MAX CSI (LC)
M- E	-169 / 0	0.10 (1)
N- D	-273 / 0	0.08 (1)
O- C	-97 / 0	0.02 (1)
L- F	-273 / 0	0.08 (1)
K- G	-97 / 0	0.02 (1)
B- O	0 / 25	0.01 (1)
K- H	0 / 25	0.01 (1)

DESIGN CRITERIA

SPECIFIED LOADS:

TOP CH.	LL	=	32.5	PSF
	DL	=	6.0	PSF
BOT CH.	LL	=	0.0	PSF
	DL	=	7.4	PSF
TOTAL LOAD		=	45.9	PSF

SPACING = 24.0 IN. C/C

THIS TRUSS IS DESIGNED FOR RESIDENTIAL OR SMALL BUILDING REQUIREMENTS OF PART 9, NBCC 2015

THIS DESIGN COMPLIES WITH:
- PART 9 OF BCBC 2018 , ABC 2019
- PART 9 OF OBC 2012 (2019 AMENDMENT)
- CSA 086-14
- TPIC 2014

DESIGN ASSUMPTIONS
-OVERHANG NOT TO BE ALTERED OR CUT OFF.

(55 % OF 43.9 P.S.F. G.S.L. PLUS 8.4 P.S.F. RAIN LOAD) EQUALS 32.5 P.S.F. SPECIFIED ROOF LIVE LOAD

CSI: TC=0.15/1.00 (A-B:1) , BC=0.02/1.00 (K-L:4) , WB=0.10/1.00 (E-M:1) , SSI=0.09/1.00 (A-B:1)

DOL LUMBER=1.00 NAIL=1.00 LS BEND=1.10 COMP=1.10 SHEAR=1.10 TENS= 1.10

COMPANION LIVE LOAD FACTOR = 1.00

TRUSS PLATE MANUFACTURER IS NOT RESPONSIBLE FOR QUALITY CONTROL IN THE TRUSS MANUFACTURING PLANT .

NAIL VALUES

PLATE	GRIP(DRY) (PSI) MAX	MIN	SHEAR (PLI) MAX	MIN	SECTION (PLI) MAX	MIN
MT20	650	371	1747	788	1987	1873

PLATE PLACEMENT TOL. = 0.250 inches

PLATE ROTATION TOL. = 5.0 Deg.

JSI GRIP= 0.24 (B) (INPUT = 0.90)
JSI METAL= 0.15 (D) (INPUT = 1.00)

LICENSED PROFESSIONAL ENGINEER
06-24-22
H. J. G. ALVES
100009024
PROVINCE OF ONTARIO

Structural component only
DWG# T-2215262

REVIEWED

JOB NAME	TRUSS NAME	QUANTITY	PLY	JOB DESC.	DRWG NO.
423610	T17	1	2	BAYVIEW WELLINGTON TRUSS DESC.	

Tamarack Roof Truss, Burlington

Version 8.530 S Feb 23 2022 MiTek Industries, Inc. Fri Jun 24 13:52:36 2022 Page 1
ID:c3jyj23uDijq_8pvRKbkZpy75XW-B3y1yqAHPXpk4RG8AWWXrMf8xy844w7wyhO43Vz33aP

Scale = 1:25.4

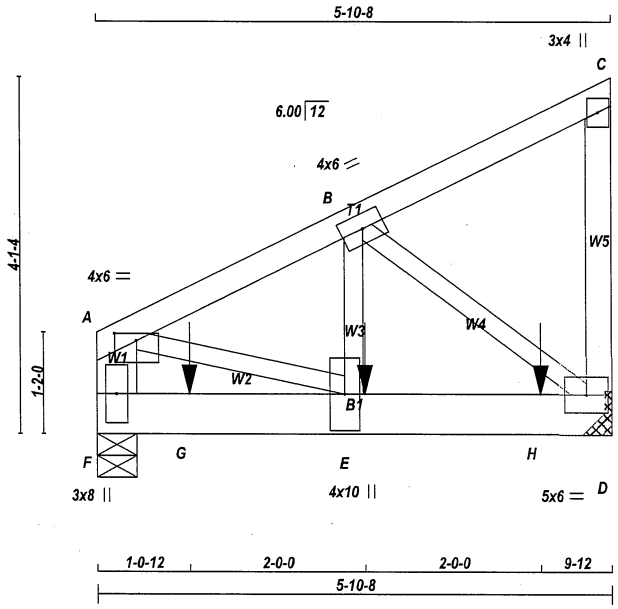

TOTAL WEIGHT = 2 X 29 = 58 lb
[M]

LUMBER
N. L. G. A. RULES

CHORDS	SIZE		LUMBER	DESCR.
F - A	2x6	DRY	No.2	SPF
A - C	2x4	DRY	No.2	SPF
D - C	2x4	DRY	No.2	SPF
F - D	2x6	DRY	No.2	SPF
ALL WEBS	2x3	DRY	No.2	SPF

DRY: SEASONED LUMBER.

DESIGN CONSISTS OF 2 TRUSSES BUILT SEPARATELY THEN FASTENED TOGETHER AS FOLLOWS:

CHORDS	#ROWS	SURFACE SPACING (IN)	LOAD(PLF)
TOP CHORDS : (0.122"X3") SPIRAL NAILS			
F- A	2	12	TOP
A- C	1	12	TOP
C- D	1	12	TOP
BOTTOM CHORDS : (0.122"X3") SPIRAL NAILS			
F- D	2	12	SIDE(183.1)
WEBS : (0.122"X3") SPIRAL NAILS			
B- E	1	3	SIDE(244.1)
2x3	1	6	

NAILS TO BE DRIVEN FROM ONE SIDE ONLY.

GIRDER NAILING ASSUMES NAILED HANGERS ARE FASTENED WITH MIN. 3-0 INCH NAILS.

TOP - COMPONENTS ARE LOADED FROM THE TOP AND MUST BE PLACED ON TOP EDGE OF ALL PLIES FOR THE LOAD TO BE TRANSFERRED TO EACH PLY.

SIDE - PLF SHOWN IS THE EQUIVALENT UDL APPLIED TO ONE SIDE THAT THE CORRESPONDING NAILING PATTERN SHALL BE CAPABLE OF TRANSFERING. REMAINING PLF MUST BE APPLIED ON THE OPPOSITE SIDE OR ON THE TOP.

PLATES (table is in inches)

JT	TYPE	PLATES	W	LEN	Y	X
A	TMVW-p	MT20	4.0	6.0	1.00	3.00
B	TMWW-t	MT20	4.0	6.0		
C	TMV+p	MT20	3.0	4.0		

Structural component only
DWG# T-2215290

DIMENSIONS, SUPPORTS AND LOADINGS SPECIFIED BY FABRICATOR TO BE VERIFIED BY BUILDING DESIGNER

BEARINGS

JT	FACTORED GROSS REACTION VERT	HORZ	MAXIMUM FACTORED GROSS REACTION DOWN	HORZ	UPLIFT	INPUT BRG	REQRD BRG
F	2132	0	2132	0	0	5-8	5-8
D	2771	0	2771	0	0	MECHANICAL	

A SUITABLE HANGER/MECHANICAL CONNECTION IS REQUIRED AT JOINT D. MINIMUM BEARING LENGTH AT JOINT D = 4-0.

UNFACTORED REACTIONS

JT	1ST LCASE COMBINED	MAX./MIN. COMPONENT REACTIONS SNOW	LIVE	PERM.LIVE	WIND	DEAD	SOIL
F	1488	1089 / 0	0 / 0	0 / 0	0 / 0	398 / 0	0 / 0
D	1935	1408 / 0	0 / 0	0 / 0	0 / 0	528 / 0	0 / 0

BEARING MATERIAL TO BE SPF NO.2 OR BETTER AT JOINT(S) F

BRACING
TOP CHORD TO BE SHEATHED OR MAX. PURLIN SPACING = 5.94 FT.
MAX. UNBRACED BOTTOM CHORD LENGTH = 10.00 FT OR RIGID CEILING DIRECTLY APPLIED.

ALL PITCH BREAKS AND PERIMETER CORNER JOINTS MUST BE LATERALLY RESTRAINED.

LOADING
TOTAL LOAD CASES: (4)

CHORDS

MEMB. FR-TO	MAX. FACTORED FORCE (LBS)	FACTORED VERT. LOAD (PLF) FROM	TO	LC1 MAX CSI (LC)	MAX. UNBRAC LENGTH
F- A	-1639 / 0	0.0	0.0	0.06 (1)	7.81
A- B	-2184 / 0	-112.4	-112.4	0.08 (1)	5.94
B- C	-11 / 0	-112.4	-112.4	0.06 (1)	6.25
D- C	-140 / 0	0.0	0.0	0.02 (1)	7.81
F- G	0 / 0	-18.5	-18.5	0.19 (1)	10.00
G- E	0 / 0	-18.5	-18.5	0.19 (1)	10.00
E- H	0 / 1964	-18.5	-18.5	0.46 (1)	10.00
H- D	0 / 1964	-18.5	-18.5	0.46 (1)	10.00

WEBS

MEMB. FR-TO	MAX. FACTORED FORCE (LBS)	MAX CSI (LC)
A- E	0 / 2031	0.25 (1)
E- B	0 / 2100	0.26 (1)
B- D	-2471 / 0	0.29 (1)

SPECIFIED CONCENTRATED LOADS (LBS)

JT	LOC.	LC1	MAX-	MAX+	FACE	DIR.	TYPE	HEEL	CONN.
E	3-0-12	-1143	-1143	---	BACK	VERT	TOTAL	---	C1
G	1-0-12	-596	-596	---	BACK	VERT	TOTAL	---	C1
H	5-0-12	-1145	-1145	---	BACK	VERT	TOTAL	---	C1

CONNECTION REQUIREMENTS

1) **C1:** A SUITABLE HANGER/MECHANICAL CONNECTION IS REQUIRED.

DESIGN CRITERIA

SPECIFIED LOADS:

TOP CH.	LL	=	32.5	PSF
	DL	=	6.0	PSF
BOT CH.	LL	=	0.0	PSF
	DL	=	7.4	PSF
TOTAL LOAD		=	45.9	PSF

SPACING = 24.0 IN. C/C

THIS TRUSS IS DESIGNED FOR RESIDENTIAL OR SMALL BUILDING REQUIREMENTS OF PART 9, NBCC 2015

THIS DESIGN COMPLIES WITH:
- PART 9 OF BCBC 2018 , ABC 2019
- PART 9 OF OBC 2012 (2019 AMENDMENT)
- CSA 086-14
- TPIC 2014

(55 % OF 43.9 P.S.F. G.S.L. PLUS 8.4 P.S.F. RAIN LOAD) EQUALS 32.5 P.S.F. SPECIFIED ROOF LIVE LOAD

ALLOWABLE DEFL.(LL)= L/360 (0.20")
CALCULATED VERT. DEFL.(LL) = L/ 999 (0.01")
ALLOWABLE DEFL.(TL)= L/360 (0.20")
CALCULATED VERT. DEFL.(TL) = L/ 999 (0.03")

CSI: TC=0.08/1.00 (A-B:1) , BC=0.46/1.00 (D-E:1) , WB=0.29/1.00 (B-D:1) , SSI=0.38/1.00 (D-E:1)

DOL LUMBER=1.00 NAIL=1.00 LS BEND=1.00 COMP=1.00 SHEAR=1.00 TENS= 1.00

COMPANION LIVE LOAD FACTOR = 1.00

TRUSS PLATE MANUFACTURER IS NOT RESPONSIBLE FOR QUALITY CONTROL IN THE TRUSS MANUFACTURING PLANT .

NAIL VALUES

PLATE	GRIP(DRY) (PSI) MAX	MIN	SHEAR (PLI) MAX	MIN	SECTION (PLI) MAX	MIN
MT20	650	371	1747	788	1987	1873

PLATE PLACEMENT TOL. = 0.250 inches

PLATE ROTATION TOL. = 5.0 Deg.

JSI GRIP= 0.84 (B) (INPUT = 0.90)
JSI METAL= 0.44 (E) (INPUT = 1.00)

CONTINUED ON PAGE 2

REVIEWED

JOB NAME	TRUSS NAME	QUANTITY	PLY	JOB DESC. BAYVIEW WELLINGTON	DRWG NO.
423610	T17	1	2	TRUSS DESC.	

PLATES (table is in inches)

JT	TYPE	PLATES	W	LEN	Y	X
D	BMVW1-t	MT20	5.0	6.0		
E	BMWW+t	MT20	4.0	10.0		
F	BMV1+p	MT20	3.0	8.0		

NOTES- (1)
1) Lateral braces to be a minimum of 2X4 SPF #2.

LICENSED PROFESSIONAL ENGINEER
06-24-22
H. J. G. ALVES
100009024
PROVINCE OF ONTARIO

Structural component only
DWG# T-2215290

REVIEWED

JOB NAME	TRUSS NAME	QUANTITY	PLY	JOB DESC.	DRWG NO.
423610	T18	1	1	BAYVIEW WELLINGTON TRUSS DESC.	

Tamarack Roof Truss, Burlington

Version 8.530 S Feb 23 2022 MiTek Industries, Inc. Fri Jun 24 13:52:37 2022 Page 1
ID:c3jyj23uDijq_8pvRKbkZpy75XW-fFWQ99BvAqxbhbrKkE1mOaCEVLaMpR04AL7dbyz33aO

Scale = 1:13.5

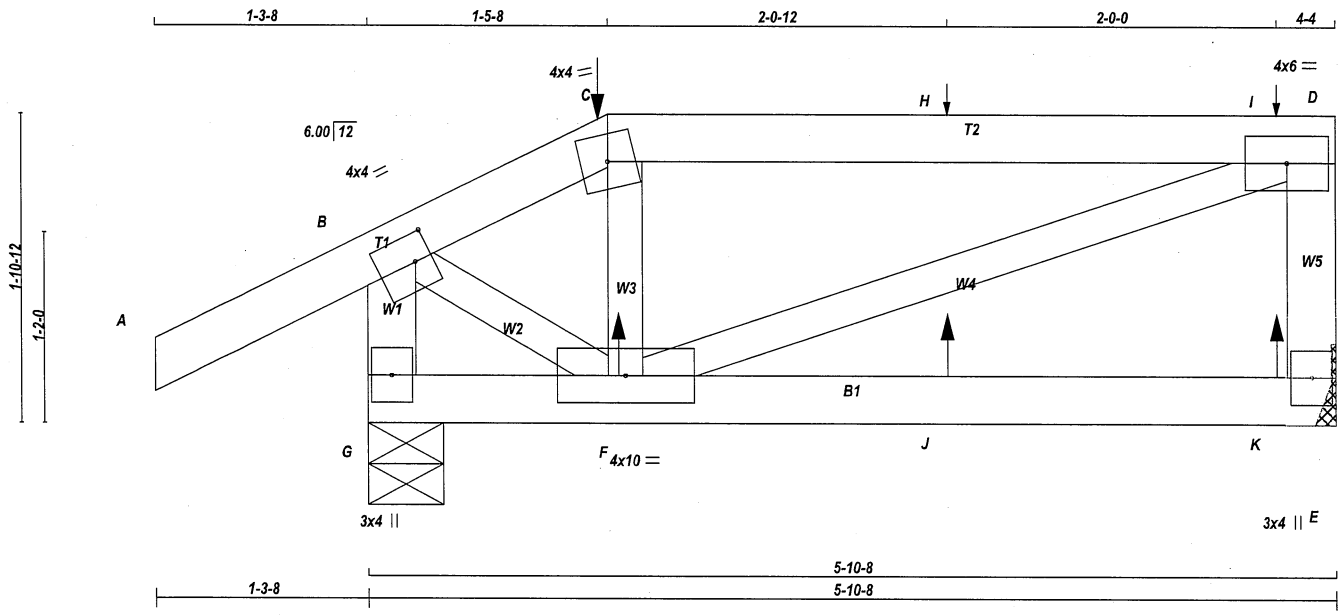

TOTAL WEIGHT = 23 lb
[M]

LUMBER
N. L. G. A. RULES

CHORDS	SIZE		LUMBER	DESCR.
A - C	2x4	DRY	No.2	SPF
C - D	2x4	DRY	No.2	SPF
E - D	2x4	DRY	No.2	SPF
G - B	2x4	DRY	No.2	SPF
G - E	2x4	DRY	No.2	SPF
ALL WEBS EXCEPT	2x3	DRY	No.2	SPF

DRY: SEASONED LUMBER.

PLATES (table is in inches)

JT	TYPE	PLATES	W	LEN	Y	X
B	TMVW-t	MT20	4.0	4.0	2.00	1.25
C	TTW-m	MT20	4.0	4.0		
D	TMVW-t	MT20	4.0	6.0		
E	BMV1+p	MT20	3.0	4.0		
F	BMWWW-t	MT20	4.0	10.0		
G	BMV1+p	MT20	3.0	4.0		

NOTES- (1)
1) Lateral braces to be a minimum of 2X4 SPF #2.

DIMENSIONS, SUPPORTS AND LOADINGS SPECIFIED BY FABRICATOR TO BE VERIFIED BY BUILDING DESIGNER

BEARINGS

JT	FACTORED GROSS REACTION VERT	HORZ	MAXIMUM FACTORED GROSS REACTION DOWN	HORZ	UPLIFT	INPUT BRG IN-SX	REQRD BRG IN-SX
E	344	0	344	0	0	MECHANICAL	
G	542	0	542	0	0	5-8	5-8

A SUITABLE HANGER/MECHANICAL CONNECTION IS REQUIRED AT JOINT E. MINIMUM BEARING LENGTH AT JOINT E = 1-8.

UNFACTORED REACTIONS

JT	1ST LCASE COMBINED	MAX./MIN. COMPONENT REACTIONS SNOW	LIVE	PERM.LIVE	WIND	DEAD	SOIL
E	242	165 / 0	0 / 0	0 / 0	0 / 0	77 / 0	0 / 0
G	377	280 / 0	0 / 0	0 / 0	0 / 0	97 / 0	0 / 0

BEARING MATERIAL TO BE SPF NO.2 OR BETTER AT JOINT(S) G

BRACING
TOP CHORD TO BE SHEATHED OR MAX. PURLIN SPACING = 6.25 FT.
MAX. UNBRACED BOTTOM CHORD LENGTH = 10.00 FT OR RIGID CEILING DIRECTLY APPLIED.

ALL PITCH BREAKS AND PERIMETER CORNER JOINTS MUST BE LATERALLY RESTRAINED.

LOADING
TOTAL LOAD CASES: (7)

CHORDS

MEMB. FR-TO	MAX. FACTORED FORCE (LBS)	FACTORED VERT. LOAD (PLF) FROM	TO	LC1	MAX CSI (LC)	MAX. UNBRAC LENGTH
A- B	0 / 34	-112.4	-112.4	0.16	(1)	10.00
B- C	-277 / 0	-112.4	-112.4	0.16	(1)	6.25
C- H	-209 / 0	-112.4	-112.4	0.41	(1)	6.25
H- I	-209 / 0	-112.4	-112.4	0.41	(1)	6.25
I- D	-209 / 0	-112.4	-112.4	0.41	(1)	6.25
E- D	-326 / 0	0.0	0.0	0.04	(1)	7.81
G- B	-536 / 0	0.0	0.0	0.06	(1)	7.81
G- F	0 / 0	-18.5	-18.5	0.08	(4)	10.00
F- J	0 / 0	-18.5	-18.5	0.08	(4)	10.00
J- K	0 / 0	-18.5	-18.5	0.08	(4)	10.00
K- E	0 / 0	-18.5	-18.5	0.08	(4)	10.00

WEBS

MEMB. FR-TO	MAX. FACTORED FORCE (LBS)	MAX CSI (LC)
F- C	-153 / 6	0.02 (1)
F- D	0 / 223	0.06 (1)
B- F	0 / 250	0.06 (1)

SPECIFIED CONCENTRATED LOADS (LBS)

JT	LOC.	LC1	MAX-	MAX+	FACE	DIR.	TYPE	HEEL	CONN.
C	1-5-8	-2	-2	94	BACK	VERT	TOTAL	---	C1
F	1-6-4	9	1	12	BACK	VERT	TOTAL	---	C1
H	3-6-4	1	1	94	BACK	VERT	TOTAL	---	C1
I	5-6-4	1	1	73	BACK	VERT	TOTAL	---	C1
J	3-6-4	9	1	12	BACK	VERT	TOTAL	---	C1
K	5-6-4	9	1	12	BACK	VERT	TOTAL	---	C1

CONNECTION REQUIREMENTS

1) **C1:** A SUITABLE HANGER/MECHANICAL CONNECTION IS REQUIRED.

DESIGN CRITERIA

SPECIFIED LOADS:

TOP CH.	LL	=	32.5	PSF
	DL	=	6.0	PSF
BOT CH.	LL	=	0.0	PSF
	DL	=	7.4	PSF
TOTAL LOAD		=	45.9	PSF

SPACING = 24.0 IN. C/C

LOADING IN FLAT SECTION BASED ON A SLOPE OF 6.00/12

THIS TRUSS IS DESIGNED FOR RESIDENTIAL OR SMALL BUILDING REQUIREMENTS OF PART 9, NBCC 2015

THIS DESIGN COMPLIES WITH:
- PART 9 OF BCBC 2018 , ABC 2019
- PART 9 OF OBC 2012 (2019 AMENDMENT)
- CSA 086-14
- TPIC 2014

DESIGN ASSUMPTIONS
-OVERHANG NOT TO BE ALTERED OR CUT OFF.

(55 % OF 43.9 P.S.F. G.S.L. PLUS 8.4 P.S.F. RAIN LOAD) EQUALS 32.5 P.S.F. SPECIFIED ROOF LIVE LOAD

ALLOWABLE DEFL.(LL)= L/360 (0.20")
CALCULATED VERT. DEFL.(LL) = L/ 999 (0.00")
ALLOWABLE DEFL.(TL)= L/360 (0.20")
CALCULATED VERT. DEFL.(TL) = L/ 999 (0.01")

CSI: TC=0.41/1.00 (C-D:1) , BC=0.08/1.00 (F-G:4) , WB=0.06/1.00 (B-F:1) , SSI=0.21/1.00 (C-D:1)

DOL LUMBER=1.00 NAIL=1.00 LS BEND=1.00 COMP=1.00 SHEAR=1.00 TENS= 1.00

COMPANION LIVE LOAD FACTOR = 1.00

TRUSS PLATE MANUFACTURER IS NOT RESPONSIBLE FOR QUALITY CONTROL IN THE TRUSS MANUFACTURING PLANT .

NAIL VALUES

PLATE	GRIP(DRY) (PSI) MAX	MIN	SHEAR (PLI) MAX	MIN	SECTION (PLI) MAX	MIN
MT20	650	371	1747	788	1987	1873

PLATE PLACEMENT TOL. = 0.250 inches

PLATE ROTATION TOL. = 5.0 Deg.

JSI GRIP= 0.36 (B) (INPUT = 0.90)
JSI METAL= 0.13 (B) (INPUT = 1.00)

LICENSED PROFESSIONAL ENGINEER
06-24-22
H. J. G. ALVES
100009024
PROVINCE OF ONTARIO

Structural component only
DWG# T-2215291

REVIEWED

JOB NAME	TRUSS NAME	QUANTITY	PLY	JOB DESC.	DRWG NO.
423610	T19S	1	1	BAYVIEW WELLINGTON TRUSS DESC.	

Tamarack Roof Truss, Burlington

Version 8.530 S Feb 23 2022 MiTek Industries, Inc. Fri Jun 24 13:52:38 2022 Page 1
ID:c3jyj23uDijq_8pvRKbkZpy75XW-7S4oNVCXx83RJIQWIxY?wnkTRIwxYtMDP?tB7Oz33aN

Scale = 1:18.8

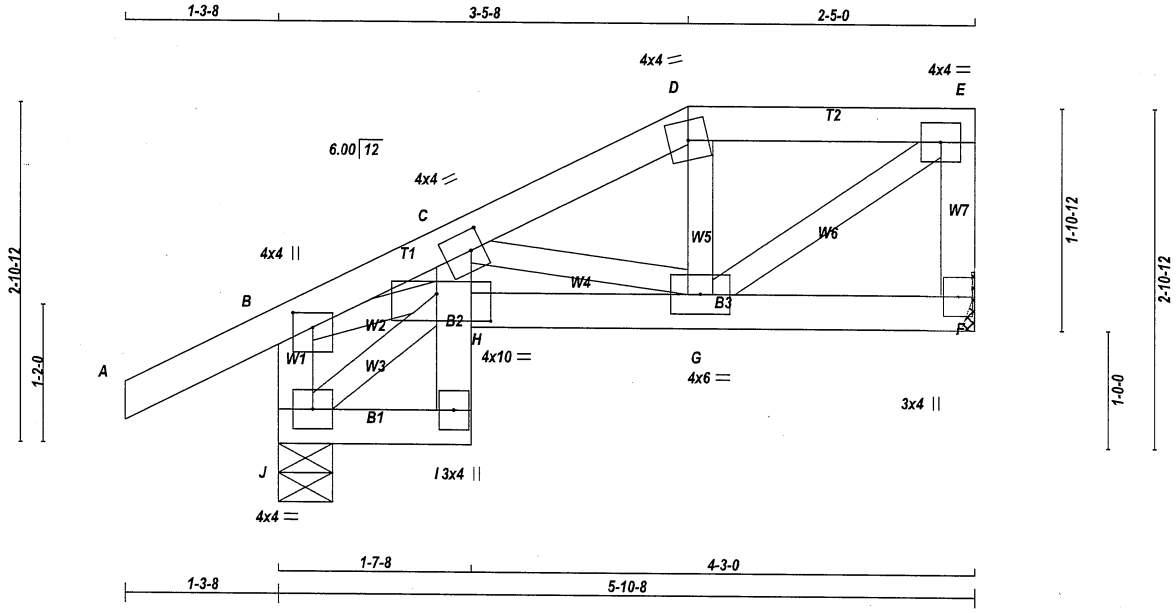

TOTAL WEIGHT = 26 lb
[M]

LUMBER
N. L. G. A. RULES

CHORDS	SIZE		LUMBER	DESCR.
A - D	2x4	DRY	No.2	SPF
D - E	2x4	DRY	No.2	SPF
F - E	2x4	DRY	No.2	SPF
J - B	2x4	DRY	No.2	SPF
J - I	2x4	DRY	No.2	SPF
I - C	2x4	DRY	No.2	SPF
H - F	2x4	DRY	No.2	SPF
ALL WEBS EXCEPT	2x3	DRY	No.2	SPF

DRY: SEASONED LUMBER.

PLATES (table is in inches)

JT	TYPE	PLATES	W	LEN	Y	X
B	TMVW+p	MT20	4.0	4.0	1.50	2.00
C	TMVW-t	MT20	4.0	4.0	2.00	1.25
D	TTW-m	MT20	4.0	4.0		
E	TMVW-t	MT20	4.0	4.0		
F	BMV1+p	MT20	3.0	4.0		
G	BMWWW-t	MT20	4.0	6.0		
H	BVMWW-l	MT20	4.0	10.0	2.75	5.50
I	BMV+p	MT20	3.0	4.0		
J	BMVW1-t	MT20	4.0	4.0		

NOTES- (1)
1) Lateral braces to be a minimum of 2X4 SPF #2.

DIMENSIONS, SUPPORTS AND LOADINGS SPECIFIED BY FABRICATOR TO BE VERIFIED BY BUILDING DESIGNER

BEARINGS

JT	FACTORED GROSS REACTION VERT	HORZ	MAXIMUM FACTORED GROSS REACTION DOWN	HORZ	UPLIFT	INPUT BRG IN-SX	REQRD BRG IN-SX
F	367	0	367	0	0	MECHANICAL	
J	555	0	555	0	0	5-8	5-8

A SUITABLE HANGER/MECHANICAL CONNECTION IS REQUIRED AT JOINT F. MINIMUM BEARING LENGTH AT JOINT F = 1-8.

UNFACTORED REACTIONS

JT	1ST LCASE COMBINED	MAX./MIN. COMPONENT REACTIONS SNOW	LIVE	PERM.LIVE	WIND	DEAD	SOIL
F	257	181 / 0	0 / 0	0 / 0	0 / 0	77 / 0	0 / 0
J	386	289 / 0	0 / 0	0 / 0	0 / 0	97 / 0	0 / 0

BEARING MATERIAL TO BE SPF NO.2 OR BETTER AT JOINT(S) J

BRACING
TOP CHORD TO BE SHEATHED OR MAX. PURLIN SPACING = 6.25 FT.
MAX. UNBRACED BOTTOM CHORD LENGTH = 10.00 FT OR RIGID CEILING DIRECTLY APPLIED.

ALL PITCH BREAKS AND PERIMETER CORNER JOINTS MUST BE LATERALLY RESTRAINED.

LOADING
TOTAL LOAD CASES: (4)

CHORDS

MEMB. FR-TO	MAX. FACTORED FORCE (LBS)	FACTORED VERT. LOAD (PLF) FROM	TO	LC1 MAX CSI (LC)	MAX. UNBRAC LENGTH
A- B	0 / 34	-112.4	-112.4	0.15 (1)	10.00
B- C	-627 / 0	-112.4	-112.4	0.15 (1)	6.25
C- D	-339 / 0	-112.4	-112.4	0.10 (1)	6.25
D- E	-296 / 0	-112.4	-112.4	0.11 (1)	6.25
F- E	-348 / 0	0.0	0.0	0.04 (1)	7.81
J- B	-497 / 0	0.0	0.0	0.05 (1)	7.81
J- I	0 / 58	-18.5	-18.5	0.02 (1)	10.00
I- H	0 / 15	0.0	0.0	0.09 (1)	10.00
H- C	0 / 117	0.0	0.0	0.11 (1)	10.00
H- G	0 / 661	-18.5	-18.5	0.12 (1)	10.00
G- F	0 / 0	-18.5	-18.5	0.02 (4)	10.00

WEBS

MEMB. FR-TO	MAX. FACTORED FORCE (LBS)	MAX CSI (LC)
C- G	-364 / 0	0.06 (1)
G- D	-110 / 4	0.02 (1)
G- E	0 / 365	0.08 (1)
J- H	-73 / 0	0.01 (1)
B- H	0 / 532	0.12 (1)

DESIGN CRITERIA

SPECIFIED LOADS:

TOP CH.	LL	=	32.5	PSF
	DL	=	6.0	PSF
BOT CH.	LL	=	0.0	PSF
	DL	=	7.4	PSF
TOTAL LOAD		=	45.9	PSF

SPACING = 24.0 IN. C/C

LOADING IN FLAT SECTION BASED ON A SLOPE OF 6.00/12

THIS TRUSS IS DESIGNED FOR RESIDENTIAL OR SMALL BUILDING REQUIREMENTS OF PART 9, NBCC 2015

THIS DESIGN COMPLIES WITH:
- PART 9 OF BCBC 2018 , ABC 2019
- PART 9 OF OBC 2012 (2019 AMENDMENT)
- CSA 086-14
- TPIC 2014

DESIGN ASSUMPTIONS
-OVERHANG NOT TO BE ALTERED OR CUT OFF.

(55 % OF 43.9 P.S.F. G.S.L. PLUS 8.4 P.S.F. RAIN LOAD) EQUALS 32.5 P.S.F. SPECIFIED ROOF LIVE LOAD

ALLOWABLE DEFL.(LL)= L/360 (0.20")
CALCULATED VERT. DEFL.(LL) = L/ 999 (0.01")
ALLOWABLE DEFL.(TL)= L/360 (0.20")
CALCULATED VERT. DEFL.(TL) = L/ 999 (0.02")

CSI: TC=0.15/1.00 (A-B:1) , BC=0.12/1.00 (G-H:1) , WB=0.12/1.00 (B-H:1) , SSI=0.12/1.00 (B-C:1)

DOL LUMBER=1.00 NAIL=1.00 LS BEND=1.10 COMP=1.10 SHEAR=1.10 TENS= 1.10

COMPANION LIVE LOAD FACTOR = 1.00

AUTOSOLVE RIGHT HEEL ONLY

TRUSS PLATE MANUFACTURER IS NOT RESPONSIBLE FOR QUALITY CONTROL IN THE TRUSS MANUFACTURING PLANT .

NAIL VALUES

PLATE	GRIP(DRY) (PSI) MAX	MIN	SHEAR (PLI) MAX	MIN	SECTION (PLI) MAX	MIN
MT20	650	371	1747	788	1987	1873

PLATE PLACEMENT TOL. = 0.250 inches

PLATE ROTATION TOL. = 5.0 Deg.

JSI GRIP= 0.85 (B) (INPUT = 0.90)
JSI METAL= 0.19 (B) (INPUT = 1.00)

LICENSED PROFESSIONAL ENGINEER
06-24-22
H. J. G. ALVES
100009024
PROVINCE OF ONTARIO

Structural component only
DWG# T-2215292

REVIEWED

JOB NAME	TRUSS NAME	QUANTITY	PLY	JOB DESC.	DRWG NO.
423610	T20S	1	1	BAYVIEW WELLINGTON TRUSS DESC.	

Tamarack Roof Truss, Burlington

Version 8.530 S Feb 23 2022 MiTek Industries, Inc. Fri Jun 24 13:52:39 2022 Page 1
ID:c3jyj23uDijq_8pvRKbkZpy75XW-ceeAarD9hSBlxv?jrf3ET?Hco9DgHHsMefckfqz33aM

Scale = 1:23.7

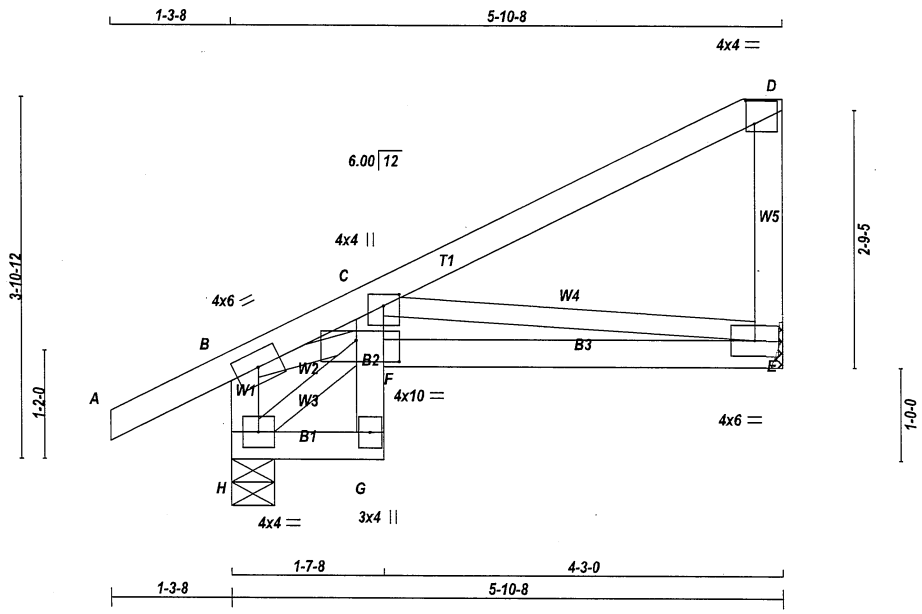

TOTAL WEIGHT = 26 lb
[M]

LUMBER
N. L. G. A. RULES

CHORDS	SIZE		LUMBER	DESCR.
A - D	2x4	DRY	No.2	SPF
E - D	2x4	DRY	No.2	SPF
H - B	2x4	DRY	No.2	SPF
H - G	2x4	DRY	No.2	SPF
G - C	2x4	DRY	No.2	SPF
F - E	2x4	DRY	No.2	SPF
ALL WEBS EXCEPT	2x3	DRY	No.2	SPF

DRY: SEASONED LUMBER.

PLATES (table is in inches)

JT	TYPE	PLATES	W	LEN	Y	X
B	TMVW-t	MT20	4.0	6.0		
C	TMVW+p	MT20	4.0	4.0	1.50	2.00
D	TMV-p	MT20	4.0	4.0	3.00	1.00
E	BMVW1-t	MT20	4.0	6.0		
F	BVMWW-l	MT20	4.0	10.0	2.75	5.50
G	BMV+p	MT20	3.0	4.0		
H	BMVW1-t	MT20	4.0	4.0		

NOTES- (1)
1) Lateral braces to be a minimum of 2X4 SPF #2.

DIMENSIONS, SUPPORTS AND LOADINGS SPECIFIED BY FABRICATOR TO BE VERIFIED BY BUILDING DESIGNER

BEARINGS

JT	FACTORED GROSS REACTION VERT	HORZ	MAXIMUM FACTORED GROSS REACTION DOWN	HORZ	UPLIFT	INPUT BRG IN-SX	REQRD BRG IN-SX
E	367	0	367	0	0	MECHANICAL	
H	555	0	555	0	0	5-8	5-8

A SUITABLE HANGER/MECHANICAL CONNECTION IS REQUIRED AT JOINT E. MINIMUM BEARING LENGTH AT JOINT E = 1-8.

UNFACTORED REACTIONS

JT	1ST LCASE COMBINED	MAX./MIN. COMPONENT REACTIONS SNOW	LIVE	PERM.LIVE	WIND	DEAD	SOIL
E	257	181 / 0	0 / 0	0 / 0	0 / 0	77 / 0	0 / 0
H	386	289 / 0	0 / 0	0 / 0	0 / 0	97 / 0	0 / 0

BEARING MATERIAL TO BE SPF NO.2 OR BETTER AT JOINT(S) H

BRACING
TOP CHORD TO BE SHEATHED OR MAX. PURLIN SPACING = 6.25 FT.
MAX. UNBRACED BOTTOM CHORD LENGTH = 10.00 FT OR RIGID CEILING DIRECTLY APPLIED.

ALL PITCH BREAKS AND PERIMETER CORNER JOINTS MUST BE LATERALLY RESTRAINED.

LOADING
TOTAL LOAD CASES: (4)

CHORDS

MEMB. FR-TO	MAX. FACTORED FORCE (LBS)	FACTORED VERT. LOAD (PLF) FROM	TO	LC1 MAX CSI (LC)	MAX. UNBRAC LENGTH
A- B	0 / 34	-112.4	-112.4	0.15 (1)	10.00
B- C	-856 / 0	-112.4	-112.4	0.16 (1)	6.25
C- D	-11 / 0	-112.4	-112.4	0.30 (1)	6.25
E- D	-222 / 0	0.0	0.0	0.03 (1)	7.81
H- B	-480 / 0	0.0	0.0	0.05 (1)	7.81
H- G	0 / 80	-18.5	-18.5	0.02 (1)	10.00
G- F	0 / 15	0.0	0.0	0.12 (1)	10.00
F- C	0 / 155	0.0	0.0	0.15 (1)	10.00
F- E	0 / 956	-18.5	-18.5	0.21 (1)	10.00

WEBS

MEMB. FR-TO	MAX. FACTORED FORCE (LBS)	MAX CSI (LC)
C- E	-964 / 0	0.29 (1)
H- F	-101 / 0	0.01 (1)
B- F	0 / 779	0.18 (1)

DESIGN CRITERIA

SPECIFIED LOADS:

TOP CH.	LL	=	32.5	PSF
	DL	=	6.0	PSF
BOT CH.	LL	=	0.0	PSF
	DL	=	7.4	PSF
TOTAL LOAD		=	45.9	PSF

SPACING = 24.0 IN. C/C

THIS TRUSS IS DESIGNED FOR RESIDENTIAL OR SMALL BUILDING REQUIREMENTS OF PART 9, NBCC 2015

THIS DESIGN COMPLIES WITH:
- PART 9 OF BCBC 2018 , ABC 2019
- PART 9 OF OBC 2012 (2019 AMENDMENT)
- CSA 086-14
- TPIC 2014

DESIGN ASSUMPTIONS
-OVERHANG NOT TO BE ALTERED OR CUT OFF.

(55 % OF 43.9 P.S.F. G.S.L. PLUS 8.4 P.S.F. RAIN LOAD) EQUALS 32.5 P.S.F. SPECIFIED ROOF LIVE LOAD

ALLOWABLE DEFL.(LL)= L/360 (0.20")
CALCULATED VERT. DEFL.(LL) = L/ 999 (0.03")
ALLOWABLE DEFL.(TL)= L/360 (0.20")
CALCULATED VERT. DEFL.(TL) = L/ 999 (0.05")

CSI: TC=0.30/1.00 (C-D:1) , BC=0.21/1.00 (E-F:1) , WB=0.29/1.00 (C-E:1) , SSI=0.19/1.00 (C-D:1)

DOL LUMBER=1.00 NAIL=1.00 LS BEND=1.10 COMP=1.10 SHEAR=1.10 TENS= 1.10

COMPANION LIVE LOAD FACTOR = 1.00

AUTOSOLVE RIGHT HEEL ONLY

TRUSS PLATE MANUFACTURER IS NOT RESPONSIBLE FOR QUALITY CONTROL IN THE TRUSS MANUFACTURING PLANT .

NAIL VALUES

PLATE	GRIP(DRY) (PSI) MAX	MIN	SHEAR (PLI) MAX	MIN	SECTION (PLI) MAX	MIN
MT20	650	371	1747	788	1987	1873

PLATE PLACEMENT TOL. = 0.250 inches

PLATE ROTATION TOL. = 5.0 Deg.

JSI GRIP= 0.73 (C) (INPUT = 0.90)
JSI METAL= 0.32 (C) (INPUT = 1.00)

LICENSED PROFESSIONAL ENGINEER
06-24-22
H. J. G. ALVES
100009024
PROVINCE OF ONTARIO

Structural component only
DWG# T-2215293

REVIEWED

JOB NAME	TRUSS NAME	QUANTITY	PLY	JOB DESC.	DRWG NO.
423613	T21	1	1	BAYVIEW WELLINGTON TRUSS DESC.	

Tamarack Roof Truss, Burlington

Version 8.530 S Feb 23 2022 MiTek Industries, Inc. Fri Jun 24 14:22:04 2022 Page 1
ID:c3jyj23uDijq_8pvRKbkZpy75XW-QCnQ0MaH1IZtB8RxlqE8VCu5jeYFJTz9Vlfd61z338n

Scale = 1:45.0

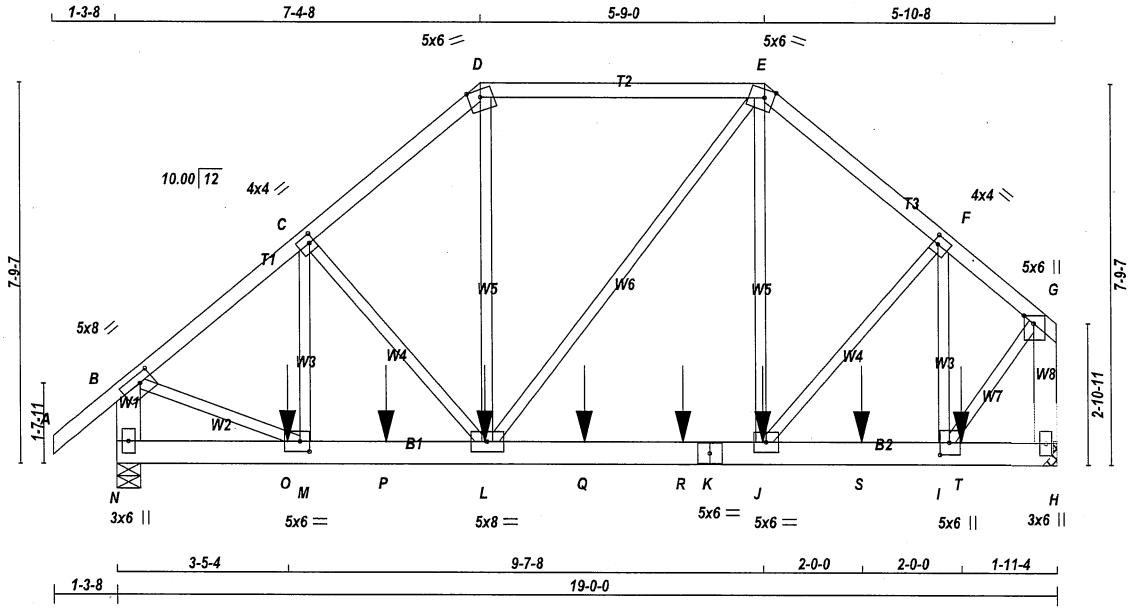

TOTAL WEIGHT = 108 lb
[M]

LUMBER
N. L. G. A. RULES

CHORDS	SIZE		LUMBER	DESCR.
A - D	2x4	DRY	No.2	SPF
D - E	2x4	DRY	No.2	SPF
E - G	2x4	DRY	No.2	SPF
N - B	2x6	DRY	No.2	SPF
H - G	2x6	DRY	No.2	SPF
N - K	2x6	DRY	No.2	SPF
K - H	2x6	DRY	No.2	SPF
ALL WEBS EXCEPT	2x3	DRY	No.2	SPF

DRY: SEASONED LUMBER.

PLATES (table is in inches)

JT	TYPE	PLATES	W	LEN	Y	X
B	TMVW-t	MT20	5.0	8.0	2.00	3.25
C	TMWW-t	MT20	4.0	4.0	2.00	1.25
D	TTW-m	MT20	5.0	6.0	Edge	
E	TTWW-m	MT20	5.0	6.0	2.00	2.25
F	TMWW-t	MT20	4.0	4.0	2.00	1.25
G	TMVW+p	MT20	5.0	6.0	2.00	2.25
H	BMV1+p	MT20	3.0	6.0		
I	BMWW+t	MT20	5.0	6.0	3.00	2.25
J	BMWW-t	MT20	5.0	6.0		
K	BS-t	MT20	5.0	6.0		
L	BMWWW-t	MT20	5.0	8.0		
M	BMWW-t	MT20	5.0	6.0	2.50	2.25
N	BMV1+p	MT20	3.0	6.0		

Edge - INDICATES REFERENCE CORNER OF PLATE TOUCHES EDGE OF CHORD.

NOTES- (1)
1) Lateral braces to be a minimum of 2X4 SPF #2.

LICENSED PROFESSIONAL ENGINEER
06-24-22
H. J. G. ALVES
100009024
PROVINCE OF ONTARIO

Structural component only
DWG# T-2215301

DIMENSIONS, SUPPORTS AND LOADINGS SPECIFIED BY FABRICATOR TO BE VERIFIED BY BUILDING DESIGNER

BEARINGS

JT	FACTORED GROSS REACTION VERT	HORZ	MAXIMUM FACTORED GROSS REACTION DOWN	HORZ	UPLIFT	INPUT BRG IN-SX	REQRD BRG IN-SX
N	2795	0	2795	0	0	5-8	5-8
H	2831	0	2831	0	0	MECHANICAL	

A SUITABLE HANGER/MECHANICAL CONNECTION IS REQUIRED AT JOINT H. MINIMUM BEARING LENGTH AT JOINT H = 3-11.

UNFACTORED REACTIONS

JT	1ST LCASE COMBINED	MAX./MIN. COMPONENT REACTIONS SNOW	LIVE	PERM.LIVE	WIND	DEAD	SOIL
N	1950	1429 / 0	0 / 0	0 / 0	0 / 0	522 / 0	0 / 0
H	1977	1440 / 0	0 / 0	0 / 0	0 / 0	537 / 0	0 / 0

BEARING MATERIAL TO BE SPF NO.2 OR BETTER AT JOINT(S) N

BRACING
TOP CHORD TO BE SHEATHED OR MAX. PURLIN SPACING = 3.52 FT.
MAX. UNBRACED BOTTOM CHORD LENGTH = 10.00 FT OR RIGID CEILING DIRECTLY APPLIED.

ALL PITCH BREAKS AND PERIMETER CORNER JOINTS MUST BE LATERALLY RESTRAINED.

LOADING
TOTAL LOAD CASES: (4)

CHORDS

MEMB. FR-TO	MAX. FACTORED FORCE (LBS)	FACTORED VERT. LOAD (PLF) FROM	TO	LC1	MAX CSI (LC)	MAX. UNBRAC LENGTH
A- B	0 / 50	-112.4	-112.4	0.17 (1)	10.00	
B- C	-2679 / 0	-112.4	-112.4	0.40 (1)	3.83	
C- D	-2472 / 0	-112.4	-112.4	0.37 (1)	3.99	
D- E	-1886 / 0	-112.4	-112.4	0.85 (1)	3.52	
E- F	-2256 / 0	-112.4	-112.4	0.29 (1)	4.25	
F- G	-1809 / 0	-112.4	-112.4	0.22 (1)	4.72	
N- B	-2727 / 0	0.0	0.0	0.20 (1)	6.28	
H- G	-2783 / 0	0.0	0.0	0.29 (1)	6.23	
N- O	0 / 0	-18.5	-18.5	0.09 (1)	10.00	
O- M	0 / 0	-18.5	-18.5	0.09 (1)	10.00	
M- P	0 / 2080	-18.5	-18.5	0.56 (1)	10.00	
P- L	0 / 2080	-18.5	-18.5	0.56 (1)	10.00	
L- Q	0 / 1722	-18.5	-18.5	0.51 (1)	10.00	
Q- R	0 / 1722	-18.5	-18.5	0.51 (1)	10.00	
R- K	0 / 1722	-18.5	-18.5	0.51 (1)	10.00	
K- J	0 / 1722	-18.5	-18.5	0.51 (1)	10.00	
J- S	0 / 1414	-18.5	-18.5	0.45 (1)	10.00	
S- I	0 / 1414	-18.5	-18.5	0.45 (1)	10.00	
I- T	0 / 0	-18.5	-18.5	0.05 (1)	10.00	
T- H	0 / 0	-18.5	-18.5	0.05 (1)	10.00	

WEBS

MEMB. FR-TO	MAX. FACTORED FORCE (LBS)	MAX CSI (LC)
M- C	-94 / 34	0.03 (1)
C- L	-325 / 0	0.18 (1)
L- D	0 / 1092	0.27 (1)
L- E	0 / 271	0.07 (1)
J- E	0 / 730	0.18 (1)
J- F	0 / 462	0.11 (1)
I- F	-1025 / 0	0.34 (1)
B- M	0 / 2185	0.54 (1)
I- G	0 / 2081	0.52 (1)

SPECIFIED CONCENTRATED LOADS (LBS)

JT	LOC.	LC1	MAX-	MAX+	FACE	DIR.	TYPE	HEEL	CONN.
J	13-0-12	-255	-255	---	BACK	VERT	TOTAL	---	C1
L	7-5-4	-255	-255	---	BACK	VERT	TOTAL	---	C1
O	3-5-4	-303	-303	---	BACK	VERT	TOTAL	---	C1
P	5-5-4	-255	-255	---	BACK	VERT	TOTAL	---	C1
Q	9-5-4	-255	-255	---	BACK	VERT	TOTAL	---	C1
R	11-5-4	-255	-255	---	BACK	VERT	TOTAL	---	C1
S	15-0-12	-255	-255	---	BACK	VERT	TOTAL	---	C1
T	17-0-12	-246	-246	---	BACK	VERT	TOTAL	---	C1

CONNECTION REQUIREMENTS

1) **C1:** A SUITABLE HANGER/MECHANICAL CONNECTION IS REQUIRED.

DESIGN CRITERIA

SPECIFIED LOADS:

TOP CH.	LL	=	32.5	PSF
	DL	=	6.0	PSF
BOT CH.	LL	=	0.0	PSF
	DL	=	7.4	PSF
TOTAL LOAD		=	45.9	PSF

SPACING = 24.0 IN. C/C

LOADING IN FLAT SECTION BASED ON A SLOPE OF 6.00/12

THIS TRUSS IS DESIGNED FOR RESIDENTIAL OR SMALL BUILDING REQUIREMENTS OF PART 9, NBCC 2015

THIS DESIGN COMPLIES WITH:
- PART 9 OF BCBC 2018 , ABC 2019
- PART 9 OF OBC 2012 (2019 AMENDMENT)
- CSA 086-14
- TPIC 2014

(55 % OF 43.9 P.S.F. G.S.L. PLUS 8.4 P.S.F. RAIN LOAD) EQUALS 32.5 P.S.F. SPECIFIED ROOF LIVE LOAD

ALLOWABLE DEFL.(LL)= L/360 (0.63")
CALCULATED VERT. DEFL.(LL) = L/ 999 (0.07")
ALLOWABLE DEFL.(TL)= L/360 (0.63")
CALCULATED VERT. DEFL.(TL) = L/ 999 (0.13")

CSI: TC=0.85/1.00 (D-E:1) , BC=0.56/1.00 (L-M:1) , WB=0.54/1.00 (B-M:1) , SSI=0.29/1.00 (J-L:1)

DOL LUMBER=1.00 NAIL=1.00 LS BEND=1.00 COMP=1.00 SHEAR=1.00 TENS= 1.00

COMPANION LIVE LOAD FACTOR = 1.00

AUTOSOLVE HEELS OFF

TRUSS PLATE MANUFACTURER IS NOT RESPONSIBLE FOR QUALITY CONTROL IN THE TRUSS MANUFACTURING PLANT .

NAIL VALUES

PLATE	GRIP(DRY) (PSI) MAX	MIN	SHEAR (PLI) MAX	MIN	SECTION (PLI) MAX	MIN
MT20	650	371	1747	788	1987	1873

PLATE PLACEMENT TOL. = 0.250 inches

PLATE ROTATION TOL. = 5.0 Deg.

JSI GRIP= 0.88 (I) (INPUT = 0.90)
JSI METAL= 0.52 (B) (INPUT = 1.00)

CONTINUED ON PAGE 2

REVIEWED

CONNECTION REQUIREMENTS

1) **C1:** A SUITABLE HANGER/MECHANICAL CONNECTION IS REQUIRED.

LICENSED PROFESSIONAL ENGINEER
06-24-22
H. J. G. ALVES
100009024
PROVINCE OF ONTARIO

Structural component only
DWG# T-2215301

REVIEWED

JOB NAME	TRUSS NAME	QUANTITY	PLY	JOB DESC.	DRWG NO.
423613	T22	1	1	BAYVIEW WELLINGTON TRUSS DESC.	

Tamarack Roof Truss, Burlington

Version 8.530 S Feb 23 2022 MiTek Industries, Inc. Fri Jun 24 14:22:05 2022 Page 1
ID:c3jyj23uDijq_8pvRKbkZpy75XW-uOLoDiavo2hkoI07IYIN2PQOX2y42zmJkPPAeTz338m

Scale = 1:54.2

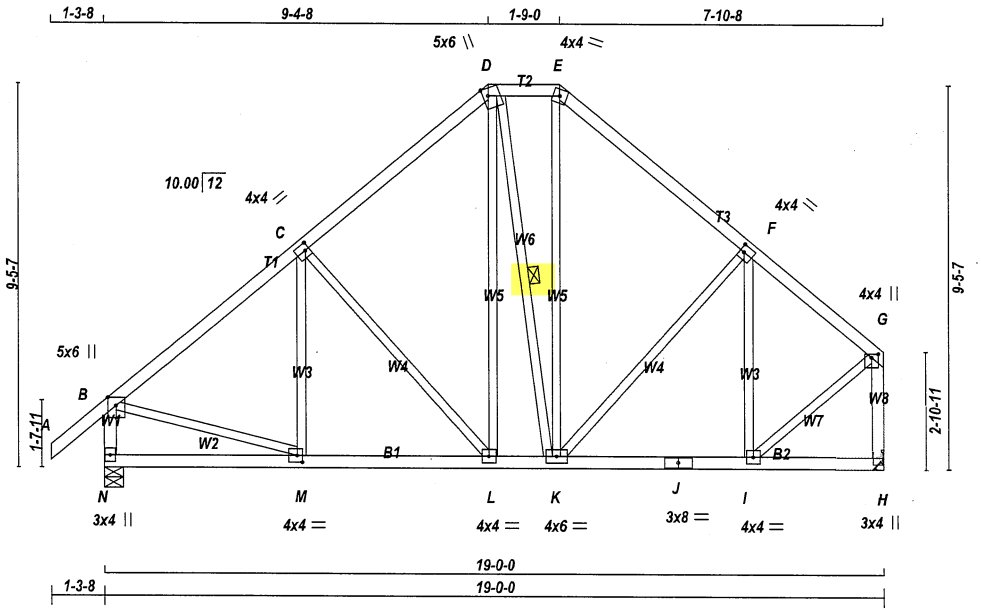

TOTAL WEIGHT = 104 lb

LUMBER
N. L. G. A. RULES

CHORDS	SIZE		LUMBER	DESCR.
A - D	2x4	DRY	No.2	SPF
D - E	2x4	DRY	No.2	SPF
E - G	2x4	DRY	No.2	SPF
N - B	2x4	DRY	No.2	SPF
H - G	2x4	DRY	No.2	SPF
N - J	2x4	DRY	No.2	SPF
J - H	2x4	DRY	No.2	SPF
ALL WEBS EXCEPT	2x3	DRY	No.2	SPF

DRY: SEASONED LUMBER.

PLATES (table is in inches)

JT	TYPE	PLATES	W	LEN	Y	X
B	TMVW+p	MT20	5.0	6.0	Edge	
C	TMWW-t	MT20	4.0	4.0	2.00	1.25
D	TTWW+m	MT20	5.0	6.0	2.25	1.50
E	TTW-m	MT20	4.0	4.0		
F	TMWW-t	MT20	4.0	4.0	2.00	1.25
G	TMVW+p	MT20	4.0	4.0	1.00	2.00
H	BMV1+p	MT20	3.0	4.0		
I	BMWW-t	MT20	4.0	4.0		
J	BS-t	MT20	3.0	8.0		
K	BMWWW-t	MT20	4.0	6.0		
L	BMWW-t	MT20	4.0	4.0		
M	BMWW-t	MT20	4.0	4.0	2.00	1.50
N	BMV1+p	MT20	3.0	4.0		

Edge - INDICATES REFERENCE CORNER OF PLATE TOUCHES EDGE OF CHORD.

NOTES- (1)
1) Lateral braces to be a minimum of 2X4 SPF #2.

DIMENSIONS, SUPPORTS AND LOADINGS SPECIFIED BY FABRICATOR TO BE VERIFIED BY BUILDING DESIGNER

BEARINGS

JT	FACTORED GROSS REACTION VERT	HORZ	MAXIMUM FACTORED GROSS REACTION DOWN	HORZ	UPLIFT	INPUT BRG IN-SX	REQRD BRG IN-SX
N	1400	0	1400	0	0	5-8	5-8
H	1244	0	1244	0	0	MECHANICAL	

A SUITABLE HANGER/MECHANICAL CONNECTION IS REQUIRED AT JOINT H. MINIMUM BEARING LENGTH AT JOINT H = 3-8.

UNFACTORED REACTIONS

JT	1ST LCASE COMBINED	MAX./MIN. COMPONENT REACTIONS SNOW	LIVE	PERM.LIVE	WIND	DEAD	SOIL
N	978	707 / 0	0 / 0	0 / 0	0 / 0	271 / 0	0 / 0
H	872	617 / 0	0 / 0	0 / 0	0 / 0	255 / 0	0 / 0

BEARING MATERIAL TO BE SPF NO.2 OR BETTER AT JOINT(S) N

BRACING
TOP CHORD TO BE SHEATHED OR MAX. PURLIN SPACING = 5.55 FT.
MAX. UNBRACED BOTTOM CHORD LENGTH = 10.00 FT OR RIGID CEILING DIRECTLY APPLIED.

ALL PITCH BREAKS AND PERIMETER CORNER JOINTS MUST BE LATERALLY RESTRAINED.

1 LATERAL BRACE(S) AT 1/ 2 LENGTH OF D-K.

END VERTICAL(S) MUST BE SHEATHED OR HAVE BRACES AS INDICATED IN THE MAX. UNBRACED LENGTH COLUMN OF THE TABLE BELOW

LOADING
TOTAL LOAD CASES: (4)

CHORDS

MEMB. FR-TO	MAX. FACTORED FORCE (LBS)	FACTORED VERT. LOAD LC1 (PLF) FROM	TO	MAX CSI (LC)	MAX. UNBRAC LENGTH
A- B	0 / 50	-112.4	-112.4	0.15 (1)	10.00
B- C	-1139 / 0	-112.4	-112.4	0.34 (1)	5.55
C- D	-881 / 0	-112.4	-112.4	0.33 (1)	6.12
D- E	-633 / 0	-112.4	-112.4	0.05 (1)	6.25
E- F	-854 / 0	-112.4	-112.4	0.28 (1)	6.25
F- G	-849 / 0	-112.4	-112.4	0.25 (1)	6.25
N- B	-1363 / 0	0.0	0.0	0.15 (1)	6.95
H- G	-1220 / 0	0.0	0.0	0.19 (1)	7.26
N- M	0 / 0	-18.5	-18.5	0.11 (4)	10.00
M- L	0 / 906	-18.5	-18.5	0.20 (1)	10.00
L- K	0 / 647	-18.5	-18.5	0.15 (1)	10.00
K- J	0 / 686	-18.5	-18.5	0.16 (1)	10.00
J- I	0 / 686	-18.5	-18.5	0.16 (1)	10.00
I- H	0 / 0	-18.5	-18.5	0.07 (4)	10.00

WEBS

MEMB. FR-TO	MAX. FACTORED FORCE (LBS)	MAX CSI (LC)
M- C	-143 / 46	0.07 (1)
C- L	-396 / 0	0.38 (1)
L- D	0 / 327	0.07 (1)
D- K	-80 / 0	0.05 (1)
K- E	0 / 222	0.05 (1)
K- F	-84 / 0	0.08 (1)
I- F	-455 / 0	0.22 (1)
B- M	0 / 938	0.21 (1)
I- G	0 / 868	0.20 (1)

DESIGN CRITERIA

SPECIFIED LOADS:

TOP CH.	LL	=	32.5	PSF
	DL	=	6.0	PSF
BOT CH.	LL	=	0.0	PSF
	DL	=	7.4	PSF
TOTAL LOAD		=	45.9	PSF

SPACING = 24.0 IN. C/C

LOADING IN FLAT SECTION BASED ON A SLOPE OF 6.00/12

THIS TRUSS IS DESIGNED FOR RESIDENTIAL OR SMALL BUILDING REQUIREMENTS OF PART 9, NBCC 2015

THIS DESIGN COMPLIES WITH:
- PART 9 OF BCBC 2018 , ABC 2019
- PART 9 OF OBC 2012 (2019 AMENDMENT)
- CSA 086-14
- TPIC 2014

(55 % OF 43.9 P.S.F. G.S.L. PLUS 8.4 P.S.F. RAIN LOAD) EQUALS 32.5 P.S.F. SPECIFIED ROOF LIVE LOAD

ALLOWABLE DEFL.(LL)= L/360 (0.63")
CALCULATED VERT. DEFL.(LL) = L/ 999 (0.03")
ALLOWABLE DEFL.(TL)= L/360 (0.63")
CALCULATED VERT. DEFL.(TL) = L/ 999 (0.05")

CSI: TC=0.34/1.00 (B-C:1) , BC=0.20/1.00 (L-M:1) , WB=0.38/1.00 (C-L:1) , SSI=0.20/1.00 (B-C:1)

DOL LUMBER=1.00 NAIL=1.00 LS BEND=1.10 COMP=1.10 SHEAR=1.10 TENS= 1.10

COMPANION LIVE LOAD FACTOR = 1.00

TRUSS PLATE MANUFACTURER IS NOT RESPONSIBLE FOR QUALITY CONTROL IN THE TRUSS MANUFACTURING PLANT .

NAIL VALUES

PLATE	GRIP(DRY) (PSI) MAX	MIN	SHEAR (PLI) MAX	MIN	SECTION (PLI) MAX	MIN
MT20	650	371	1747	788	1987	1873

PLATE PLACEMENT TOL. = 0.250 inches

PLATE ROTATION TOL. = 5.0 Deg.

JSI GRIP= 0.87 (G) (INPUT = 0.90)
JSI METAL= 0.47 (B) (INPUT = 1.00)

LICENSED PROFESSIONAL ENGINEER
06-24-22
H. J. G. ALVES
100009024
PROVINCE OF ONTARIO

Structural component only
DWG# T-2215302

REVIEWED

JOB NAME	TRUSS NAME	QUANTITY	PLY	JOB DESC.	DRWG NO.
423613	T23S	1	1	BAYVIEW WELLINGTON TRUSS DESC.	

Tamarack Roof Truss, Burlington

Version 8.530 S Feb 23 2022 MiTek Industries, Inc. Fri Jun 24 14:22:06 2022 Page 1
ID:c3jyj23uDijq_8pvRKbkZpy75XW-MavAR2bXZMpaQSaJsFGcadzcuRLqnUfSy39kAwz338I

Scale = 1:28.0

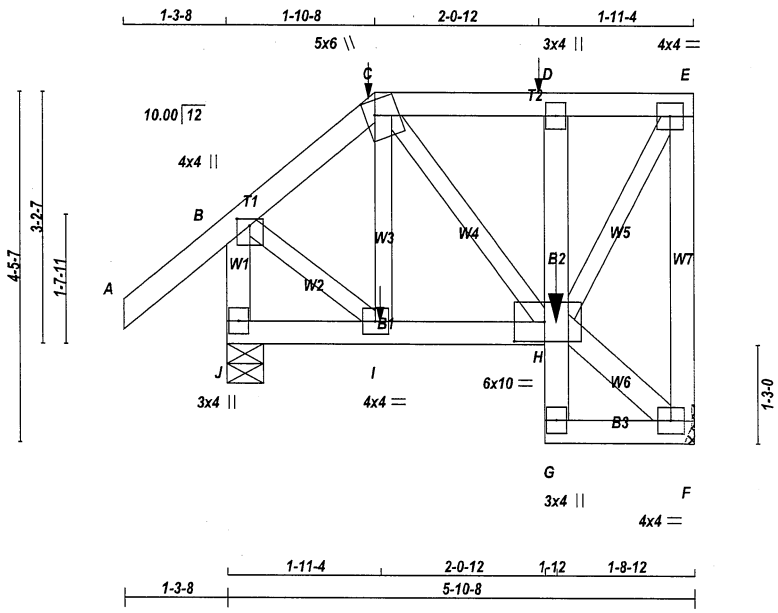

TOTAL WEIGHT = 37 lb

LUMBER
N. L. G. A. RULES

CHORDS	SIZE		LUMBER	DESCR.
A - C	2x4	DRY	No.2	SPF
C - E	2x4	DRY	No.2	SPF
F - E	2x4	DRY	No.2	SPF
J - B	2x4	DRY	No.2	SPF
J - H	2x4	DRY	No.2	SPF
G - D	2x4	DRY	No.2	SPF
G - F	2x4	DRY	No.2	SPF
ALL WEBS EXCEPT	2x3	DRY	No.2	SPF
H - F	2x4	DRY	No.2	SPF

DRY: SEASONED LUMBER.

PLATES (table is in inches)

JT	TYPE	PLATES	W	LEN	Y	X
B	TMVW+p	MT20	4.0	4.0	1.00	2.00
C	TTWW+m	MT20	5.0	6.0	2.25	1.50
D	TMV+p	MT20	3.0	4.0		
E	TMVW-t	MT20	4.0	4.0		
F	BMVW1-t	MT20	4.0	4.0		
G	BMV+p	MT20	3.0	4.0		
H	BVMWWW-l	MT20	6.0	10.0	3.00	4.50
I	BMWW-t	MT20	4.0	4.0		
J	BMV1+p	MT20	3.0	4.0		

NOTES- (1)
1) Lateral braces to be a minimum of 2X4 SPF #2.

DIMENSIONS, SUPPORTS AND LOADINGS SPECIFIED BY FABRICATOR TO BE VERIFIED BY BUILDING DESIGNER

BEARINGS

JT	FACTORED GROSS REACTION VERT	HORZ	MAXIMUM FACTORED GROSS REACTION DOWN	HORZ	UPLIFT	INPUT BRG IN-SX	REQRD BRG IN-SX
F	371	0	371	0	0	MECHANICAL	
J	560	0	560	0	0	5-8	5-8

A SUITABLE HANGER/MECHANICAL CONNECTION IS REQUIRED AT JOINT F. MINIMUM BEARING LENGTH AT JOINT F = 1-8.

UNFACTORED REACTIONS

JT	1ST LCASE COMBINED	MAX./MIN. COMPONENT REACTIONS SNOW	LIVE	PERM.LIVE	WIND	DEAD	SOIL
F	260	180 / 0	0 / 0	0 / 0	0 / 0	80 / 0	0 / 0
J	390	291 / 0	0 / 0	0 / 0	0 / 0	99 / 0	0 / 0

BEARING MATERIAL TO BE SPF NO.2 OR BETTER AT JOINT(S) J

BRACING
TOP CHORD TO BE SHEATHED OR MAX. PURLIN SPACING = 6.25 FT.
MAX. UNBRACED BOTTOM CHORD LENGTH = 7.81 FT OR RIGID CEILING DIRECTLY APPLIED.

ALL PITCH BREAKS AND PERIMETER CORNER JOINTS MUST BE LATERALLY RESTRAINED.

LOADING
TOTAL LOAD CASES: (7)

CHORDS

MEMB. FR-TO	MAX. FACTORED FORCE (LBS)	FACTORED VERT. LOAD (PLF) FROM	TO	LC1 MAX CSI (LC)	MAX. UNBRAC LENGTH
A- B	0 / 50	-112.4	-112.4	0.17 (1)	10.00
B- C	-234 / 0	-112.4	-112.4	0.16 (1)	6.25
C- D	-169 / 0	-112.4	-112.4	0.08 (5)	6.25
D- E	-166 / 0	-112.4	-112.4	0.08 (5)	6.25
F- E	-349 / 0	0.0	0.0	0.11 (1)	7.81
J- B	-545 / 0	0.0	0.0	0.06 (1)	7.81
J- I	0 / 0	-18.5	-18.5	0.02 (4)	10.00
I- H	0 / 149	-18.5	-18.5	0.04 (1)	10.00
G- H	0 / 18	0.0	0.0	0.02 (1)	10.00
H- D	-272 / 0	0.0	0.0	0.02 (1)	7.81
G- F	0 / 8	-18.5	-18.5	0.02 (4)	10.00

WEBS

MEMB. FR-TO	MAX. FACTORED FORCE (LBS)	MAX CSI (LC)
I- C	-55 / 19	0.01 (1)
C- H	-1 / 41	0.01 (5)
H- F	-10 / 0	0.00 (1)
H- E	0 / 325	0.08 (1)
B- I	0 / 181	0.04 (1)

SPECIFIED CONCENTRATED LOADS (LBS)

JT	LOC.	LC1	MAX-	MAX+	FACE	DIR.	TYPE	HEEL	CONN.
C	1-10-8	1	1	98	BACK	VERT	TOTAL	---	C1
D	3-11-4	1	1	98	BACK	VERT	TOTAL	---	C1
H	4-1-12	-5	-5	---	BACK	VERT	TOTAL	---	C1
I	1-11-4	1	1	---	BACK	VERT	TOTAL	---	C1

CONNECTION REQUIREMENTS

1) **C1:** A SUITABLE HANGER/MECHANICAL CONNECTION IS REQUIRED.

DESIGN CRITERIA

SPECIFIED LOADS:

TOP CH.	LL	=	32.5	PSF
	DL	=	6.0	PSF
BOT CH.	LL	=	0.0	PSF
	DL	=	7.4	PSF
TOTAL LOAD		=	45.9	PSF

SPACING = 24.0 IN. C/C

LOADING IN FLAT SECTION BASED ON A SLOPE OF 6.00/12

THIS TRUSS IS DESIGNED FOR RESIDENTIAL OR SMALL BUILDING REQUIREMENTS OF PART 9, NBCC 2015

THIS DESIGN COMPLIES WITH:
- PART 9 OF BCBC 2018 , ABC 2019
- PART 9 OF OBC 2012 (2019 AMENDMENT)
- CSA 086-14
- TPIC 2014

DESIGN ASSUMPTIONS
-OVERHANG NOT TO BE ALTERED OR CUT OFF.

(55 % OF 43.9 P.S.F. G.S.L. PLUS 8.4 P.S.F. RAIN LOAD) EQUALS 32.5 P.S.F. SPECIFIED ROOF LIVE LOAD

ALLOWABLE DEFL.(LL)= L/360 (0.20")
CALCULATED VERT. DEFL.(LL) = L/ 999 (0.00")
ALLOWABLE DEFL.(TL)= L/360 (0.20")
CALCULATED VERT. DEFL.(TL) = L/ 999 (0.01")

CSI: TC=0.17/1.00 (A-B:1) , BC=0.04/1.00 (H-I:1) , WB=0.08/1.00 (E-H:1) , SSI=0.13/1.00 (C-D:5)

DOL LUMBER=1.00 NAIL=1.00 LS BEND=1.00 COMP=1.00 SHEAR=1.00 TENS= 1.00

COMPANION LIVE LOAD FACTOR = 1.00

TRUSS PLATE MANUFACTURER IS NOT RESPONSIBLE FOR QUALITY CONTROL IN THE TRUSS MANUFACTURING PLANT .

NAIL VALUES

PLATE	GRIP(DRY) (PSI) MAX	MIN	SHEAR (PLI) MAX	MIN	SECTION (PLI) MAX	MIN
MT20	650	371	1747	788	1987	1873

PLATE PLACEMENT TOL. = 0.250 inches

PLATE ROTATION TOL. = 5.0 Deg.

JSI GRIP= 0.38 (B) (INPUT = 0.90)
JSI METAL= 0.11 (B) (INPUT = 1.00)

LICENSED PROFESSIONAL ENGINEER
06-24-22
H. J. G. ALVES
100009024
PROVINCE OF ONTARIO

Structural component only
DWG# T-2215303

REVIEWED

JOB NAME	TRUSS NAME	QUANTITY	PLY	JOB DESC.	DRWG NO.
423613	T23SZ	1	1	BAYVIEW WELLINGTON TRUSS DESC.	

Tamarack Roof Truss, Burlington

Version 8.530 S Feb 23 2022 MiTek Industries, Inc. Fri Jun 24 14:22:07 2022 Page 1
ID:c3jyj23uDijq_8pvRKbkZpy75XW-rmTYeOcAKgxR2c9WQznr7qVndrhvWxXbBjuHiMz338k

Scale = 1:28.0

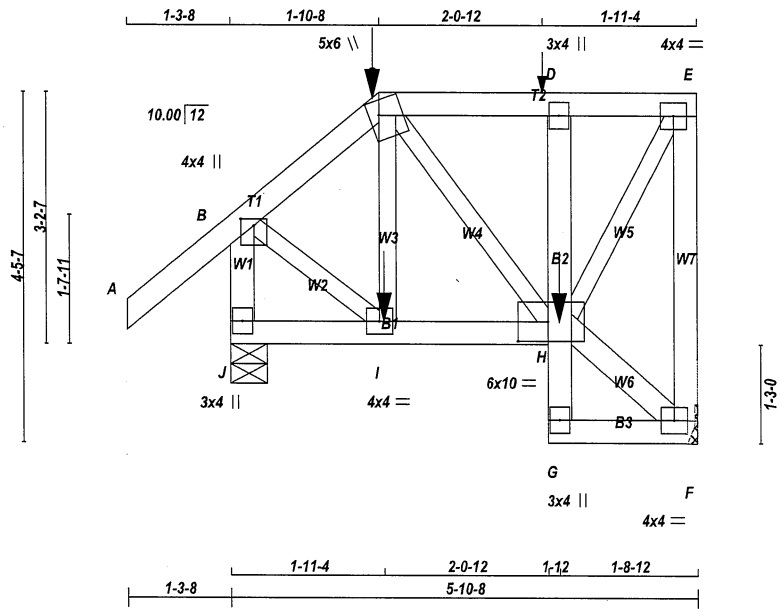

TOTAL WEIGHT = 37 lb

[M]

LUMBER

N. L. G. A. RULES

CHORDS	SIZE		LUMBER	DESCR.
A - C	2x4	DRY	No.2	SPF
C - E	2x4	DRY	No.2	SPF
F - E	2x4	DRY	No.2	SPF
J - B	2x4	DRY	No.2	SPF
J - H	2x4	DRY	No.2	SPF
G - D	2x4	DRY	No.2	SPF
G - F	2x4	DRY	No.2	SPF
ALL WEBS	2x3	DRY	No.2	SPF
EXCEPT				
H - F	2x4	DRY	No.2	SPF

DRY: SEASONED LUMBER.

PLATES (table is in inches)

JT	TYPE	PLATES	W	LEN	Y	X
B	TMVW+p	MT20	4.0	4.0	1.00	2.00
C	TTWW+m	MT20	5.0	6.0	2.25	1.50
D	TMV+p	MT20	3.0	4.0		
E	TMVW-t	MT20	4.0	4.0		
F	BMVW1-t	MT20	4.0	4.0		
G	BMV+p	MT20	3.0	4.0		
H	BVMWWW-l	MT20	6.0	10.0	3.00	4.50
I	BMWW-t	MT20	4.0	4.0		
J	BMV1+p	MT20	3.0	4.0		

NOTES- (1)
1) Lateral braces to be a minimum of 2X4 SPF #2.

DIMENSIONS, SUPPORTS AND LOADINGS SPECIFIED BY FABRICATOR TO BE VERIFIED BY BUILDING DESIGNER

BEARINGS

JT	FACTORED GROSS REACTION VERT	HORZ	MAXIMUM FACTORED GROSS REACTION DOWN	HORZ	UPLIFT	INPUT BRG IN-SX	REQRD BRG IN-SX
F	453	0	453	0	0	MECHANICAL	
J	638	0	638	0	0	5-8	5-8

A SUITABLE HANGER/MECHANICAL CONNECTION IS REQUIRED AT JOINT F. MINIMUM BEARING LENGTH AT JOINT F = 1-8.

UNFACTORED REACTIONS

JT	1ST LCASE COMBINED	MAX./MIN. COMPONENT REACTIONS SNOW	LIVE	PERM.LIVE	WIND	DEAD	SOIL
F	318	220 / 0	0 / 0	0 / 0	0 / 0	98 / 0	0 / 0
J	445	328 / 0	0 / 0	0 / 0	0 / 0	117 / 0	0 / 0

BEARING MATERIAL TO BE SPF NO.2 OR BETTER AT JOINT(S) J

BRACING

TOP CHORD TO BE SHEATHED OR MAX. PURLIN SPACING = 6.25 FT.
MAX. UNBRACED BOTTOM CHORD LENGTH = 7.81 FT OR RIGID CEILING DIRECTLY APPLIED.

ALL PITCH BREAKS AND PERIMETER CORNER JOINTS MUST BE LATERALLY RESTRAINED.

LOADING

TOTAL LOAD CASES: (7)

CHORDS

MEMB. FR-TO	MAX. FACTORED FORCE (LBS)	FACTORED VERT. LOAD (PLF) FROM	TO	LC1	MAX CSI (LC)	MAX. UNBRAC LENGTH
A- B	0 / 50	-112.4	-112.4	0.17 (1)	10.00	
B- C	-301 / 0	-112.4	-112.4	0.16 (1)	6.25	
C- D	-217 / 0	-112.4	-112.4	0.08 (1)	6.25	
D- E	-213 / 0	-112.4	-112.4	0.07 (5)	6.25	
F- E	-429 / 0	0.0	0.0	0.14 (1)	7.81	
J- B	-622 / 0	0.0	0.0	0.07 (1)	7.81	
J- I	0 / 0	-18.5	-18.5	0.02 (4)	10.00	
I- H	0 / 201	-18.5	-18.5	0.05 (1)	10.00	
G- H	0 / 18	0.0	0.0	0.02 (1)	10.00	
H- D	-273 / 0	0.0	0.0	0.02 (1)	7.81	
G- F	0 / 10	-18.5	-18.5	0.02 (4)	10.00	

WEBS

MEMB. FR-TO	MAX. FACTORED FORCE (LBS)	MAX CSI (LC)
I- C	-68 / 28	0.01 (5)
C- H	-5 / 32	0.01 (5)
H- F	-12 / 0	0.00 (1)
H- E	0 / 417	0.10 (1)
B- I	0 / 242	0.06 (1)

SPECIFIED CONCENTRATED LOADS (LBS)

JT	LOC.	LC1	MAX-	MAX+	FACE	DIR.	TYPE	HEEL	CONN.
C	1-10-8	-6	-6	---	FRONT	VERT	TOTAL	---	C1
D	3-11-4	-0	-0	---	FRONT	VERT	TOTAL	---	C1
H	4-1-12	-59	-59	4	TOP	VERT	TOTAL	---	C1
I	1-11-4	-53	-53	10	TOP	VERT	TOTAL	---	C1

CONNECTION REQUIREMENTS

1) **C1:** A SUITABLE HANGER/MECHANICAL CONNECTION IS REQUIRED.

DESIGN CRITERIA

SPECIFIED LOADS:

TOP CH.	LL	=	32.5	PSF
	DL	=	6.0	PSF
BOT CH.	LL	=	0.0	PSF
	DL	=	7.4	PSF
TOTAL LOAD		=	45.9	PSF

SPACING = 24.0 IN. C/C

LOADING IN FLAT SECTION BASED ON A SLOPE OF 6.00/12

THIS TRUSS IS DESIGNED FOR RESIDENTIAL OR SMALL BUILDING REQUIREMENTS OF PART 9, NBCC 2015

THIS DESIGN COMPLIES WITH:
- PART 9 OF BCBC 2018 , ABC 2019
- PART 9 OF OBC 2012 (2019 AMENDMENT)
- CSA 086-14
- TPIC 2014

DESIGN ASSUMPTIONS
-OVERHANG NOT TO BE ALTERED OR CUT OFF.

(55 % OF 43.9 P.S.F. G.S.L. PLUS 8.4 P.S.F. RAIN LOAD) EQUALS 32.5 P.S.F. SPECIFIED ROOF LIVE LOAD

ALLOWABLE DEFL.(LL)= L/360 (0.20")
CALCULATED VERT. DEFL.(LL) = L/ 999 (0.00")
ALLOWABLE DEFL.(TL)= L/360 (0.20")
CALCULATED VERT. DEFL.(TL) = L/ 999 (0.01")

CSI: TC=0.17/1.00 (A-B:1) , BC=0.05/1.00 (H-I:1) , WB=0.10/1.00 (E-H:1) , SSI=0.13/1.00 (C-D:5)

DOL LUMBER=1.00 NAIL=1.00 LS BEND=1.00 COMP=1.00 SHEAR=1.00 TENS= 1.00

COMPANION LIVE LOAD FACTOR = 1.00

TRUSS PLATE MANUFACTURER IS NOT RESPONSIBLE FOR QUALITY CONTROL IN THE TRUSS MANUFACTURING PLANT .

NAIL VALUES

PLATE	GRIP(DRY) (PSI) MAX	MIN	SHEAR (PLI) MAX	MIN	SECTION (PLI) MAX	MIN
MT20	650	371	1747	788	1987	1873

PLATE PLACEMENT TOL. = 0.250 inches

PLATE ROTATION TOL. = 5.0 Deg.

JSI GRIP= 0.47 (H) (INPUT = 0.90)
JSI METAL= 0.12 (B) (INPUT = 1.00)

LICENSED PROFESSIONAL ENGINEER
06-24-22
H. J. G. ALVES
100009024
PROVINCE OF ONTARIO

Structural component only
DWG# T-2215304

REVIEWED

JOB NAME	TRUSS NAME	QUANTITY	PLY	JOB DESC.	DRWG NO.
423613	T24S	2	1	BAYVIEW WELLINGTON TRUSS DESC.	

Tamarack Roof Truss, Burlington

Version 8.530 S Feb 23 2022 MiTek Industries, Inc. Fri Jun 24 14:22:08 2022 Page 1
ID:c3jyj23uDijq_8pvRKbkZpy75XW-Jz1wskdo5z3lfmki_gl4f22wDF0RFPRlQNeqFoz338j

Scale = 1:37.1

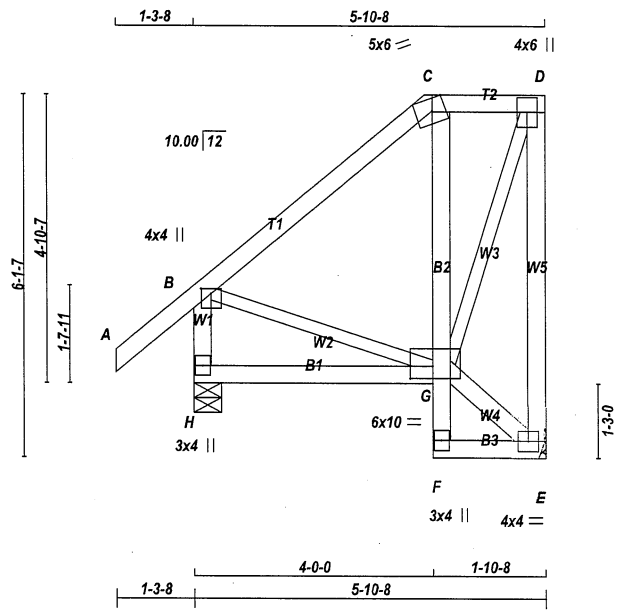

TOTAL WEIGHT = 2 X 40 = 80 lb

[M]

LUMBER

N. L. G. A. RULES

CHORDS	SIZE		LUMBER	DESCR.
A - C	2x4	DRY	No.2	SPF
C - D	2x4	DRY	No.2	SPF
E - D	2x4	DRY	No.2	SPF
H - B	2x4	DRY	No.2	SPF
H - G	2x4	DRY	No.2	SPF
F - C	2x4	DRY	No.2	SPF
F - E	2x4	DRY	No.2	SPF
ALL WEBS	2x4	DRY	No.2	SPF
EXCEPT				
G - D	2x3	DRY	No.2	SPF
B - G	2x3	DRY	No.2	SPF

DRY: SEASONED LUMBER.

PLATES (table is in inches)

JT	TYPE	PLATES	W	LEN	Y	X
B	TMVW+p	MT20	4.0	4.0	1.00	2.00
C	TTV-m	MT20	5.0	6.0	Edge	2.75
D	TMVW+p	MT20	4.0	6.0		
E	BMVW1-t	MT20	4.0	4.0		
F	BMV+p	MT20	3.0	4.0		
G	BVMWWW-I	MT20	6.0	10.0	2.50	4.50
H	BMV1+p	MT20	3.0	4.0		

Edge - INDICATES REFERENCE CORNER OF PLATE TOUCHES EDGE OF CHORD.

NOTES- (1)
1) Lateral braces to be a minimum of 2X4 SPF #2.

DIMENSIONS, SUPPORTS AND LOADINGS SPECIFIED BY FABRICATOR TO BE VERIFIED BY BUILDING DESIGNER

BEARINGS

JT	FACTORED GROSS REACTION VERT	HORZ	MAXIMUM FACTORED GROSS REACTION DOWN	HORZ	UPLIFT	INPUT BRG	REQRD BRG
E	385	0	385	0	0	MECHANICAL	
H	540	0	540	0	0	5-8	5-8

A SUITABLE HANGER/MECHANICAL CONNECTION IS REQUIRED AT JOINT E. MINIMUM BEARING LENGTH AT JOINT E = 1-8.

UNFACTORED REACTIONS

JT	1ST LCASE COMBINED	MAX./MIN. COMPONENT REACTIONS SNOW	LIVE	PERM.LIVE	WIND	DEAD	SOIL
E	270	191 / 0	0 / 0	0 / 0	0 / 0	79 / 0	0 / 0
H	376	281 / 0	0 / 0	0 / 0	0 / 0	95 / 0	0 / 0

BEARING MATERIAL TO BE SPF NO.2 OR BETTER AT JOINT(S) H

BRACING

TOP CHORD TO BE SHEATHED OR MAX. PURLIN SPACING = 6.25 FT.
MAX. UNBRACED BOTTOM CHORD LENGTH = 7.81 FT OR RIGID CEILING DIRECTLY APPLIED.

ALL PITCH BREAKS AND PERIMETER CORNER JOINTS MUST BE LATERALLY RESTRAINED.

LOADING

TOTAL LOAD CASES: (4)

CHORDS

MEMB. FR-TO	MAX. FACTORED FORCE (LBS)	FACTORED VERT. LOAD (PLF) FROM	TO	LC1 MAX CSI (LC)	MAX. UNBRAC LENGTH
A- B	0 / 50	-112.4	-112.4	0.15 (1)	10.00
B- C	-138 / 0	-112.4	-112.4	0.31 (1)	6.25
C- D	-97 / 0	-112.4	-112.4	0.07 (1)	6.25
E- D	-364 / 0	0.0	0.0	0.26 (1)	7.81
H- B	-502 / 0	0.0	0.0	0.05 (1)	7.81
H- G	0 / 0	-18.5	-18.5	0.09 (4)	10.00
F- G	0 / 18	0.0	0.0	0.01 (1)	10.00
G- C	-241 / 0	0.0	0.0	0.02 (1)	7.81
F- E	0 / 7	-18.5	-18.5	0.02 (4)	10.00

WEBS

MEMB. FR-TO	MAX. FACTORED FORCE (LBS)	MAX CSI (LC)
G- E	-9 / 0	0.00 (1)
G- D	0 / 274	0.06 (1)
B- G	0 / 112	0.03 (1)

DESIGN CRITERIA

SPECIFIED LOADS:

TOP CH.	LL	=	32.5	PSF
	DL	=	6.0	PSF
BOT CH.	LL	=	0.0	PSF
	DL	=	7.4	PSF
TOTAL LOAD		=	45.9	PSF

SPACING = 24.0 IN. C/C

LOADING IN FLAT SECTION BASED ON A SLOPE OF 6.00/12

THIS TRUSS IS DESIGNED FOR RESIDENTIAL OR SMALL BUILDING REQUIREMENTS OF PART 9, NBCC 2015

THIS DESIGN COMPLIES WITH:
- PART 9 OF BCBC 2018 , ABC 2019
- PART 9 OF OBC 2012 (2019 AMENDMENT)
- CSA 086-14
- TPIC 2014

(55 % OF 43.9 P.S.F. G.S.L. PLUS 8.4 P.S.F. RAIN LOAD) EQUALS 32.5 P.S.F. SPECIFIED ROOF LIVE LOAD

ALLOWABLE DEFL.(LL)= L/360 (0.20")
CALCULATED VERT. DEFL.(LL) = L/ 999 (0.00")
ALLOWABLE DEFL.(TL)= L/360 (0.20")
CALCULATED VERT. DEFL.(TL) = L/ 999 (0.02")

CSI: TC=0.31/1.00 (B-C:1) , BC=0.09/1.00 (G-H:4) , WB=0.06/1.00 (D-G:1) , SSI=0.14/1.00 (B-C:1)

DOL LUMBER=1.00 NAIL=1.00 LS BEND=1.10 COMP=1.10 SHEAR=1.10 TENS= 1.10

COMPANION LIVE LOAD FACTOR = 1.00

TRUSS PLATE MANUFACTURER IS NOT RESPONSIBLE FOR QUALITY CONTROL IN THE TRUSS MANUFACTURING PLANT .

NAIL VALUES

PLATE	GRIP(DRY) (PSI) MAX	MIN	SHEAR (PLI) MAX	MIN	SECTION (PLI) MAX	MIN
MT20	650	371	1747	788	1987	1873

PLATE PLACEMENT TOL. = 0.250 inches

PLATE ROTATION TOL. = 5.0 Deg.

JSI GRIP= 0.38 (B) (INPUT = 0.90)
JSI METAL= 0.10 (B) (INPUT = 1.00)

LICENSED PROFESSIONAL ENGINEER
06-24-22
H. J. G. ALVES
100009024
PROVINCE OF ONTARIO

Structural component only
DWG# T-2215305

REVIEWED

JOB NAME	TRUSS NAME	QUANTITY	PLY	JOB DESC.	DRWG NO.
423613	T25S	4	1	BAYVIEW WELLINGTON TRUSS DESC.	

Tamarack Roof Truss, Burlington

Version 8.530 S Feb 23 2022 MiTek Industries, Inc. Fri Jun 24 14:22:09 2022 Page 1
ID:c3jyj23uDijq_8pvRKbkZpy75XW-n9bJ34eQsHB9HvJuXOqJCFb6NfMg_r0ue1NOnEz338i

Scale: 1/4"=1'

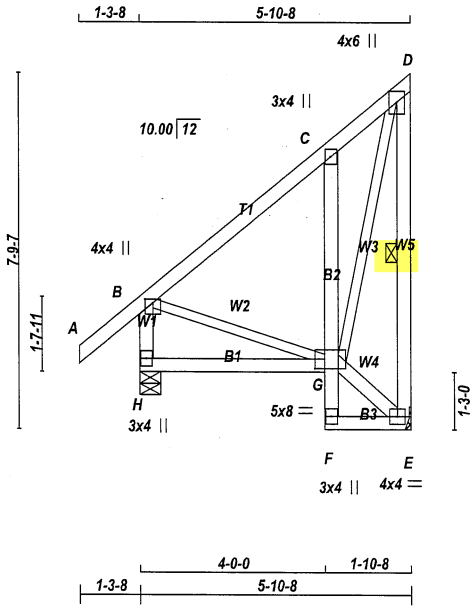

TOTAL WEIGHT = 4 X 44 = 175 lb

LUMBER
N. L. G. A. RULES

CHORDS	SIZE		LUMBER	DESCR.
H - B	2x4	DRY	No.2	SPF
A - D	2x4	DRY	No.2	SPF
E - D	2x4	DRY	No.2	SPF
H - G	2x4	DRY	No.2	SPF
F - C	2x4	DRY	No.2	SPF
F - E	2x4	DRY	No.2	SPF
ALL WEBS	2x3	DRY	No.2	SPF
EXCEPT				
G - E	2x4	DRY	No.2	SPF

DRY: SEASONED LUMBER.

PLATES (table is in inches)

JT	TYPE	PLATES	W	LEN	Y	X
B	TMVW+p	MT20	4.0	4.0	1.00	2.00
C	TMV+p	MT20	3.0	4.0		
D	TMVW+p	MT20	4.0	6.0	Edge	
E	BMVW1-t	MT20	4.0	4.0		
F	BMV+p	MT20	3.0	4.0		
G	BVMWWW-l	MT20	5.0	8.0	2.50	2.50
H	BMV1+p	MT20	3.0	4.0		

Edge - INDICATES REFERENCE CORNER OF PLATE TOUCHES EDGE OF CHORD.

NOTES- (1)
1) Lateral braces to be a minimum of 2X4 SPF #2.

DIMENSIONS, SUPPORTS AND LOADINGS SPECIFIED BY FABRICATOR TO BE VERIFIED BY BUILDING DESIGNER

BEARINGS

JT	FACTORED GROSS REACTION VERT	HORZ	MAXIMUM FACTORED GROSS REACTION DOWN	HORZ	UPLIFT	INPUT BRG IN-SX	REQRD BRG IN-SX
H	540	0	540	0	0	5-8	5-8
E	385	0	385	0	0	MECHANICAL	

A SUITABLE HANGER/MECHANICAL CONNECTION IS REQUIRED AT JOINT E. MINIMUM BEARING LENGTH AT JOINT E = 1-8.

UNFACTORED REACTIONS

JT	1ST LCASE COMBINED	MAX./MIN. COMPONENT REACTIONS SNOW	LIVE	PERM.LIVE	WIND	DEAD	SOIL
H	376	281 / 0	0 / 0	0 / 0	0 / 0	95 / 0	0 / 0
E	270	191 / 0	0 / 0	0 / 0	0 / 0	79 / 0	0 / 0

BEARING MATERIAL TO BE SPF NO.2 OR BETTER AT JOINT(S) H

BRACING
TOP CHORD TO BE SHEATHED OR MAX. PURLIN SPACING = 6.25 FT.
MAX. UNBRACED BOTTOM CHORD LENGTH = 7.81 FT OR RIGID CEILING DIRECTLY APPLIED.

ALL PITCH BREAKS AND PERIMETER CORNER JOINTS MUST BE LATERALLY RESTRAINED.

1 LATERAL BRACE(S) AT 1/ 2 LENGTH OF D-E.

END VERTICAL(S) MUST BE SHEATHED OR HAVE BRACES AS INDICATED IN THE MAX. UNBRACED LENGTH COLUMN OF THE TABLE BELOW

LOADING
TOTAL LOAD CASES: (4)

CHORDS

MEMB. FR-TO	MAX. FACTORED FORCE (LBS)	FACTORED VERT. LOAD LC1 (PLF) FROM	TO	MAX CSI (LC)	MAX. UNBRAC LENGTH
H- B	-502 / 0	0.0	0.0	0.05 (1)	7.81
A- B	0 / 50	-112.4	-112.4	0.15 (1)	10.00
B- C	-154 / 0	-112.4	-112.4	0.22 (1)	6.25
C- D	-218 / 0	-112.4	-112.4	0.22 (1)	6.25
E- D	-358 / 0	0.0	0.0	0.10 (1)	6.25
H- G	0 / 0	-18.5	-18.5	0.09 (4)	10.00
F- G	0 / 18	0.0	0.0	0.03 (1)	10.00
G- C	-446 / 0	0.0	0.0	0.07 (1)	7.81
F- E	0 / 15	-18.5	-18.5	0.02 (4)	10.00

WEBS

MEMB. FR-TO	MAX. FACTORED FORCE (LBS)	MAX CSI (LC)
B- G	0 / 144	0.03 (1)
G- E	-19 / 0	0.00 (1)
G- D	0 / 463	0.10 (1)

DESIGN CRITERIA

SPECIFIED LOADS:

TOP CH.	LL	=	32.5	PSF
	DL	=	6.0	PSF
BOT CH.	LL	=	0.0	PSF
	DL	=	7.4	PSF
TOTAL LOAD		=	45.9	PSF

SPACING = 24.0 IN. C/C

THIS TRUSS IS DESIGNED FOR RESIDENTIAL OR SMALL BUILDING REQUIREMENTS OF PART 9, NBCC 2015

THIS DESIGN COMPLIES WITH:
- PART 9 OF BCBC 2018 , ABC 2019
- PART 9 OF OBC 2012 (2019 AMENDMENT)
- CSA 086-14
- TPIC 2014

(55 % OF 43.9 P.S.F. G.S.L. PLUS 8.4 P.S.F. RAIN LOAD) EQUALS 32.5 P.S.F. SPECIFIED ROOF LIVE LOAD

ALLOWABLE DEFL.(LL)= L/360 (0.20")
CALCULATED VERT. DEFL.(LL) = L/ 999 (0.01")
ALLOWABLE DEFL.(TL)= L/360 (0.20")
CALCULATED VERT. DEFL.(TL) = L/ 999 (0.02")

CSI: TC=0.22/1.00 (B-C:1) , BC=0.09/1.00 (G-H:4) , WB=0.10/1.00 (D-G:1) , SSI=0.16/1.00 (B-C:1)

DOL LUMBER=1.00 NAIL=1.00 LS BEND=1.10 COMP=1.10 SHEAR=1.10 TENS= 1.10

COMPANION LIVE LOAD FACTOR = 1.00

TRUSS PLATE MANUFACTURER IS NOT RESPONSIBLE FOR QUALITY CONTROL IN THE TRUSS MANUFACTURING PLANT .

NAIL VALUES

PLATE	GRIP(DRY) (PSI) MAX	MIN	SHEAR (PLI) MAX	MIN	SECTION (PLI) MAX	MIN
MT20	650	371	1747	788	1987	1873

PLATE PLACEMENT TOL. = 0.250 inches

PLATE ROTATION TOL. = 5.0 Deg.

JSI GRIP= 0.49 (D) (INPUT = 0.90)
JSI METAL= 0.17 (G) (INPUT = 1.00)

LICENSED PROFESSIONAL ENGINEER
06-24-22
H. J. G. ALVES
100009024
PROVINCE OF ONTARIO

Structural component only
DWG# T-2215306

REVIEWED

JOB NAME	TRUSS NAME	QUANTITY	PLY	JOB DESC.	DRWG NO.
423613	T26	1	2	BAYVIEW WELLINGTON TRUSS DESC.	

Tamarack Roof Truss, Burlington

Version 8.530 S Feb 23 2022 MiTek Industries, Inc. Fri Jun 24 14:22:10 2022 Page 1
ID:c3jyj23uDijq_8pvRKbkZpy75XW-FL8hHPe2dbJ0v3u555LYIT7Js3cYjDL2th7xJhz338h

Scale = 1:25.4

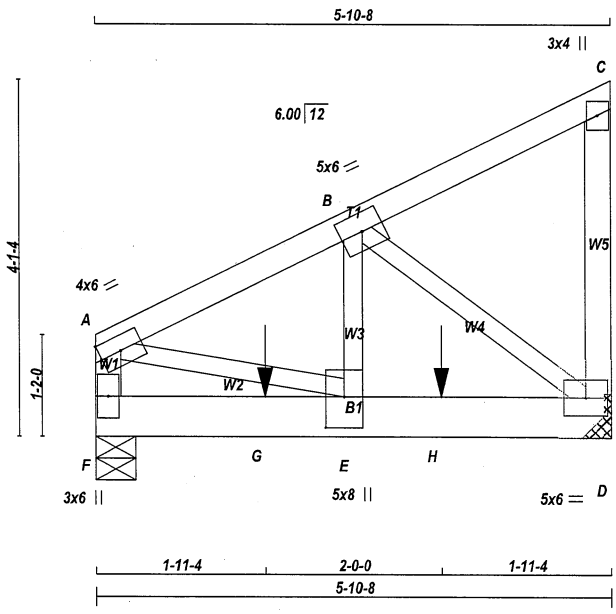

TOTAL WEIGHT = 2 X 29 = 58 lb
[M]

LUMBER
N. L. G. A. RULES

CHORDS	SIZE		LUMBER	DESCR.
F - A	2x4	DRY	No.2	SPF
A - C	2x4	DRY	No.2	SPF
D - C	2x4	DRY	No.2	SPF
F - D	2x6	DRY	No.2	SPF
ALL WEBS	2x3	DRY	No.2	SPF

DRY: SEASONED LUMBER.

DESIGN CONSISTS OF 2 TRUSSES BUILT SEPARATELY THEN FASTENED TOGETHER AS FOLLOWS:

CHORDS	#ROWS	SURFACE SPACING (IN)	LOAD(PLF)
TOP CHORDS : (0.122"X3") SPIRAL NAILS			
F- A	1	12	TOP
A- C	1	12	TOP
C- D	1	12	TOP
BOTTOM CHORDS : (0.122"X3") SPIRAL NAILS			
F- D	2	12	SIDE(0.0)
WEBS : (0.122"X3") SPIRAL NAILS			
2x3	1	6	

NAILS TO BE DRIVEN FROM ONE SIDE ONLY.

GIRDER NAILING ASSUMES NAILED HANGERS ARE FASTENED WITH MIN. 3-0 INCH NAILS.

TOP - COMPONENTS ARE LOADED FROM THE TOP AND MUST BE PLACED ON TOP EDGE OF ALL PLIES FOR THE LOAD TO BE TRANSFERRED TO EACH PLY.

SIDE - PLF SHOWN IS THE EQUIVALENT UDL APPLIED TO ONE SIDE THAT THE CORRESPONDING NAILING PATTERN SHALL BE CAPABLE OF TRANSFERING. REMAINING PLF MUST BE APPLIED ON THE OPPOSITE SIDE OR ON THE TOP.

PLATES (table is in inches)

JT	TYPE	PLATES	W	LEN	Y	X
A	TMVW-t	MT20	4.0	6.0		Edge
B	TMWW-t	MT20	5.0	6.0		
C	TMV+p	MT20	3.0	4.0		
D	BMWW1-t	MT20	5.0	6.0		

LICENSED PROFESSIONAL ENGINEER
06-24-22
H. J. G. ALVES
100009024
PROVINCE OF ONTARIO

Structural component only
DWG# T-2215307

DIMENSIONS, SUPPORTS AND LOADINGS SPECIFIED BY FABRICATOR TO BE VERIFIED BY BUILDING DESIGNER

BEARINGS

JT	FACTORED GROSS REACTION VERT	HORZ	MAXIMUM FACTORED GROSS REACTION DOWN	HORZ	UPLIFT	INPUT BRG	REQRD BRG
F	2673	0	2673	0	0	5-8	5-8
D	2134	0	2134	0	0	MECHANICAL	

A SUITABLE HANGER/MECHANICAL CONNECTION IS REQUIRED AT JOINT D. MINIMUM BEARING LENGTH AT JOINT D = 4-0.

UNFACTORED REACTIONS

JT	1ST LCASE COMBINED	MAX./MIN. COMPONENT REACTIONS SNOW	LIVE	PERM.LIVE	WIND	DEAD	SOIL
F	1867	1359 / 0	0 / 0	0 / 0	0 / 0	508 / 0	0 / 0
D	1491	1079 / 0	0 / 0	0 / 0	0 / 0	412 / 0	0 / 0

BEARING MATERIAL TO BE SPF NO.2 OR BETTER AT JOINT(S) F

BRACING
TOP CHORD TO BE SHEATHED OR MAX. PURLIN SPACING = 5.52 FT.
MAX. UNBRACED BOTTOM CHORD LENGTH = 10.00 FT OR RIGID CEILING DIRECTLY APPLIED.

ALL PITCH BREAKS AND PERIMETER CORNER JOINTS MUST BE LATERALLY RESTRAINED.

LOADING
TOTAL LOAD CASES: (4)

CHORDS

MEMB. FR-TO	MAX. FACTORED FORCE (LBS)	FACTORED VERT. LOAD LC1 (PLF) FROM	TO	MAX CSI (LC)	MAX. UNBRAC LENGTH
F- A	-1953 / 0	0.0	0.0	0.11 (1)	7.81
A- B	-2640 / 0	-112.4	-112.4	0.09 (1)	5.52
B- C	-10 / 0	-112.4	-112.4	0.07 (1)	10.00
D- C	-143 / 0	0.0	0.0	0.02 (1)	7.81
F- G	0 / 0	-18.5	-18.5	0.50 (1)	10.00
G- E	0 / 0	-18.5	-18.5	0.50 (1)	10.00
E- H	0 / 2370	-18.5	-18.5	0.44 (1)	10.00
H- D	0 / 2370	-18.5	-18.5	0.44 (1)	10.00

WEBS

MEMB. FR-TO	MAX. FACTORED FORCE (LBS)	MAX CSI (LC)
A- E	0 / 2451	0.30 (1)
E- B	0 / 2620	0.32 (1)
B- D	-2982 / 0	0.36 (1)

SPECIFIED CONCENTRATED LOADS (LBS)

JT	LOC.	LC1	MAX-	MAX+	FACE	DIR.	TYPE	HEEL	CONN.
G	1-11-4	-1962	-1962	---	FRONT	VERT	TOTAL	---	C1
H	3-11-4	-857	-857	---	FRONT	VERT	TOTAL	---	C1

CONNECTION REQUIREMENTS

1) **C1:** A SUITABLE HANGER/MECHANICAL CONNECTION IS REQUIRED.

DESIGN CRITERIA

SPECIFIED LOADS:

TOP CH.	LL	=	32.5	PSF
	DL	=	6.0	PSF
BOT CH.	LL	=	0.0	PSF
	DL	=	7.4	PSF
TOTAL LOAD		=	45.9	PSF

SPACING = 24.0 IN. C/C

THIS TRUSS IS DESIGNED FOR RESIDENTIAL OR SMALL BUILDING REQUIREMENTS OF PART 9, NBCC 2015

THIS DESIGN COMPLIES WITH:
- PART 9 OF BCBC 2018 , ABC 2019
- PART 9 OF OBC 2012 (2019 AMENDMENT)
- CSA 086-14
- TPIC 2014

(55 % OF 43.9 P.S.F. G.S.L. PLUS 8.4 P.S.F. RAIN LOAD) EQUALS 32.5 P.S.F. SPECIFIED ROOF LIVE LOAD

ALLOWABLE DEFL.(LL)= L/360 (0.20")
CALCULATED VERT. DEFL.(LL) = L/ 999 (0.02")
ALLOWABLE DEFL.(TL)= L/360 (0.20")
CALCULATED VERT. DEFL.(TL) = L/ 999 (0.04")

CSI: TC=0.11/1.00 (A-F:1) , BC=0.50/1.00 (E-F:1) , WB=0.36/1.00 (B-D:1) , SSI=0.71/1.00 (E-F:1)

DOL LUMBER=1.00 NAIL=1.00 LS BEND=1.00 COMP=1.00 SHEAR=1.00 TENS= 1.00

COMPANION LIVE LOAD FACTOR = 1.00

TRUSS PLATE MANUFACTURER IS NOT RESPONSIBLE FOR QUALITY CONTROL IN THE TRUSS MANUFACTURING PLANT .

NAIL VALUES

PLATE	GRIP(DRY) (PSI) MAX	MIN	SHEAR (PLI) MAX	MIN	SECTION (PLI) MAX	MIN
MT20	650	371	1747	788	1987	1873

PLATE PLACEMENT TOL. = 0.250 inches

PLATE ROTATION TOL. = 5.0 Deg.

JSI GRIP= 0.81 (B) (INPUT = 0.90)
JSI METAL= 0.43 (E) (INPUT = 1.00)

REVIEWED

CONTINUED ON PAGE 2

JOB NAME	TRUSS NAME	QUANTITY	PLY	JOB DESC. BAYVIEW WELLINGTON	DRWG NO.
423613	T26	1	2	TRUSS DESC.	

PLATES (table is in inches)

JT	TYPE	PLATES	W	LEN	Y	X
E	BMWW+t	MT20	5.0	8.0	4.25	2.50
F	BMV1+p	MT20	3.0	6.0		

Edge - INDICATES REFERENCE CORNER OF PLATE TOUCHES EDGE OF CHORD.

NOTES- (1)
1) Lateral braces to be a minimum of 2X4 SPF #2.

LICENSED PROFESSIONAL ENGINEER
06-24-22
H. J. G. ALVES
100009024
PROVINCE OF ONTARIO

Structural component only
DWG# T-2215307

REVIEWED

JOB NAME	TRUSS NAME	QUANTITY	PLY	JOB DESC.	DRWG NO.
423615	T26Z5	1	2	BAYVIEW WELLINGTON TRUSS DESC.	

Tamarack Roof Truss, Burlington

Version 8.530 S Feb 23 2022 MiTek Industries, Inc. Fri Jun 24 16:24:43 2022 Page 1
ID:c3jyj23uDijq_8pvRKbkZpy75XW-SyxQWfdK_ojjY3WHLslrF3Aul5AM2oqLiAoYu_z31Lo

Scale = 1:25.4

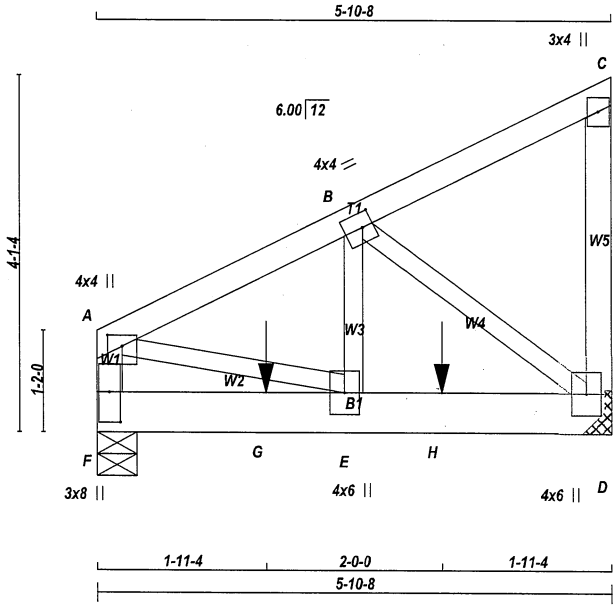

TOTAL WEIGHT = 2 X 29 = 58 lb
[M]

LUMBER

N. L. G. A. RULES

CHORDS	SIZE		LUMBER	DESCR.
F - A	2x4	DRY	No.2	SPF
A - C	2x4	DRY	No.2	SPF
D - C	2x4	DRY	No.2	SPF
F - D	2x6	DRY	No.2	SPF
ALL WEBS	2x3	DRY	No.2	SPF

DRY: SEASONED LUMBER.

DESIGN CONSISTS OF 2 TRUSSES BUILT SEPARATELY THEN FASTENED TOGETHER AS FOLLOWS:

CHORDS	#ROWS	SURFACE SPACING (IN)	LOAD(PLF)
TOP CHORDS : (0.122"X3") SPIRAL NAILS			
F- A	1	12	TOP
A- C	1	12	TOP
C- D	1	12	TOP
BOTTOM CHORDS : (0.122"X3") SPIRAL NAILS			
F- D	2	12	SIDE(0.0)
WEBS : (0.122"X3") SPIRAL NAILS			
2x3	1	6	

NAILS TO BE DRIVEN FROM ONE SIDE ONLY.

GIRDER NAILING ASSUMES NAILED HANGERS ARE FASTENED WITH MIN. 3-0 INCH NAILS.

TOP - COMPONENTS ARE LOADED FROM THE TOP AND MUST BE PLACED ON TOP EDGE OF ALL PLIES FOR THE LOAD TO BE TRANSFERRED TO EACH PLY.

SIDE - PLF SHOWN IS THE EQUIVALENT UDL APPLIED TO ONE SIDE THAT THE CORRESPONDING NAILING PATTERN SHALL BE CAPABLE OF TRANSFERING. REMAINING PLF MUST BE APPLIED ON THE OPPOSITE SIDE OR ON THE TOP.

PLATES (table is in inches)

JT	TYPE	PLATES	W	LEN	Y	X
A	TMVW+p	MT20	4.0	4.0	1.50	2.00
B	TMWW-t	MT20	4.0	4.0	2.00	1.50
C	TMV+p	MT20	3.0	4.0		
D	BMVW1+p	MT20	4.0	6.0		

LICENSED PROFESSIONAL ENGINEER
06-24-22
H. J. G. ALVES
100009024
PROVINCE OF ONTARIO

Structural component only
DWG# T-2215339

DIMENSIONS, SUPPORTS AND LOADINGS SPECIFIED BY FABRICATOR TO BE VERIFIED BY BUILDING DESIGNER

BEARINGS

JT	FACTORED GROSS REACTION VERT	HORZ	MAXIMUM FACTORED GROSS REACTION DOWN	HORZ	UPLIFT	INPUT BRG IN-SX	REQRD BRG IN-SX
F	1228	0	1228	0	0	5-8	5-8
D	1777	0	1777	0	0	MECHANICAL	

A SUITABLE HANGER/MECHANICAL CONNECTION IS REQUIRED AT JOINT D. MINIMUM BEARING LENGTH AT JOINT D = 4-0.

UNFACTORED REACTIONS

JT	1ST LCASE COMBINED	MAX./MIN. COMPONENT REACTIONS SNOW	LIVE	PERM.LIVE	WIND	DEAD	SOIL
F	857	628 / 0	0 / 0	0 / 0	0 / 0	229 / 0	0 / 0
D	1243	893 / 0	0 / 0	0 / 0	0 / 0	349 / 0	0 / 0

BEARING MATERIAL TO BE SPF NO.2 OR BETTER AT JOINT(S) F

BRACING

TOP CHORD TO BE SHEATHED OR MAX. PURLIN SPACING = 6.25 FT.
MAX. UNBRACED BOTTOM CHORD LENGTH = 10.00 FT OR RIGID CEILING DIRECTLY APPLIED.

ALL PITCH BREAKS AND PERIMETER CORNER JOINTS MUST BE LATERALLY RESTRAINED.

LOADING

TOTAL LOAD CASES: (4)

CHORDS

MEMB. FR-TO	MAX. FACTORED FORCE (LBS)	FACTORED VERT. LOAD (PLF) FROM	TO	LC1 MAX CSI (LC)	MAX. UNBRAC LENGTH
F- A	-1238 / 0	0.0	0.0	0.07 (1)	7.81
A- B	-1601 / 0	-112.4	-112.4	0.07 (1)	6.25
B- C	-13 / 0	-112.4	-112.4	0.07 (1)	6.25
D- C	-135 / 0	0.0	0.0	0.02 (1)	7.81
F- G	0 / 0	-18.5	-18.5	0.16 (1)	10.00
G- E	0 / 0	-18.5	-18.5	0.16 (1)	10.00
E- H	0 / 1444	-18.5	-18.5	0.46 (1)	10.00
H- D	0 / 1444	-18.5	-18.5	0.46 (1)	10.00

WEBS

MEMB. FR-TO	MAX. FACTORED FORCE (LBS)	MAX CSI (LC)
A- E	0 / 1493	0.18 (1)
E- B	0 / 1435	0.18 (1)
B- D	-1817 / 0	0.22 (1)

SPECIFIED CONCENTRATED LOADS (LBS)

JT	LOC.	LC1	MAX-	MAX+	FACE	DIR.	TYPE	HEEL	CONN.
G	1-11-4	-214	-214	---	FRONT	VERT	TOTAL	---	C1
H	3-11-4	-1347	-1347	---	FRONT	VERT	TOTAL	---	C1

CONNECTION REQUIREMENTS

1) **C1:** A SUITABLE HANGER/MECHANICAL CONNECTION IS REQUIRED.

DESIGN CRITERIA

SPECIFIED LOADS:

TOP CH.	LL	=	32.5	PSF
	DL	=	6.0	PSF
BOT CH.	LL	=	0.0	PSF
	DL	=	7.4	PSF
TOTAL LOAD		=	45.9	PSF

SPACING = 24.0 IN. C/C

THIS TRUSS IS DESIGNED FOR RESIDENTIAL OR SMALL BUILDING REQUIREMENTS OF PART 9, NBCC 2015

THIS DESIGN COMPLIES WITH:
- PART 9 OF BCBC 2018 , ABC 2019
- PART 9 OF OBC 2012 (2019 AMENDMENT)
- CSA 086-14
- TPIC 2014

(55 % OF 43.9 P.S.F. G.S.L. PLUS 8.4 P.S.F. RAIN LOAD) EQUALS 32.5 P.S.F. SPECIFIED ROOF LIVE LOAD

ALLOWABLE DEFL.(LL)= L/360 (0.20")
CALCULATED VERT. DEFL.(LL) = L/ 999 (0.02")
ALLOWABLE DEFL.(TL)= L/360 (0.20")
CALCULATED VERT. DEFL.(TL) = L/ 999 (0.03")

CSI: TC=0.07/1.00 (A-B:1) , BC=0.46/1.00 (D-E:1) , WB=0.22/1.00 (B-D:1) , SSI=0.48/1.00 (D-E:1)

DOL LUMBER=1.00 NAIL=1.00 LS BEND=1.00 COMP=1.00 SHEAR=1.00 TENS= 1.00

COMPANION LIVE LOAD FACTOR = 1.00

TRUSS PLATE MANUFACTURER IS NOT RESPONSIBLE FOR QUALITY CONTROL IN THE TRUSS MANUFACTURING PLANT .

NAIL VALUES

PLATE	GRIP(DRY) (PSI) MAX	MIN	SHEAR (PLI) MAX	MIN	SECTION (PLI) MAX	MIN
MT20	650	371	1747	788	1987	1873

PLATE PLACEMENT TOL. = 0.250 inches

PLATE ROTATION TOL. = 5.0 Deg.

JSI GRIP= 0.86 (A) (INPUT = 0.90)
JSI METAL= 0.33 (D) (INPUT = 1.00)

REVIEWED

CONTINUED ON PAGE 2

PLATES (table is in inches)

JT	TYPE	PLATES	W	LEN	Y	X
E	BMWW+t	MT20	4.0	6.0		
F	BMV1+p	MT20	3.0	8.0	4.25	1.50

NOTES- (1)
1) Lateral braces to be a minimum of 2X4 SPF #2.

LICENSED PROFESSIONAL ENGINEER
06-24-22
H. J. G. ALVES
100009024
PROVINCE OF ONTARIO

Structural component only
DWG# T-2215339

REVIEWED

JOB NAME	TRUSS NAME	QUANTITY	PLY	JOB DESC.	DRWG NO.
423613	T27	1	2	BAYVIEW WELLINGTON TRUSS DESC.	

Tamarack Roof Truss, Burlington

Version 8.530 S Feb 23 2022 MiTek Industries, Inc. Fri Jun 24 14:22:11 2022 Page 1
ID:c3jyj23uDijq_8pvRKbkZpy75XW-jYi3UlfgOuRtWDTHfosnHggLqSvySdDB6LsVr7z338g

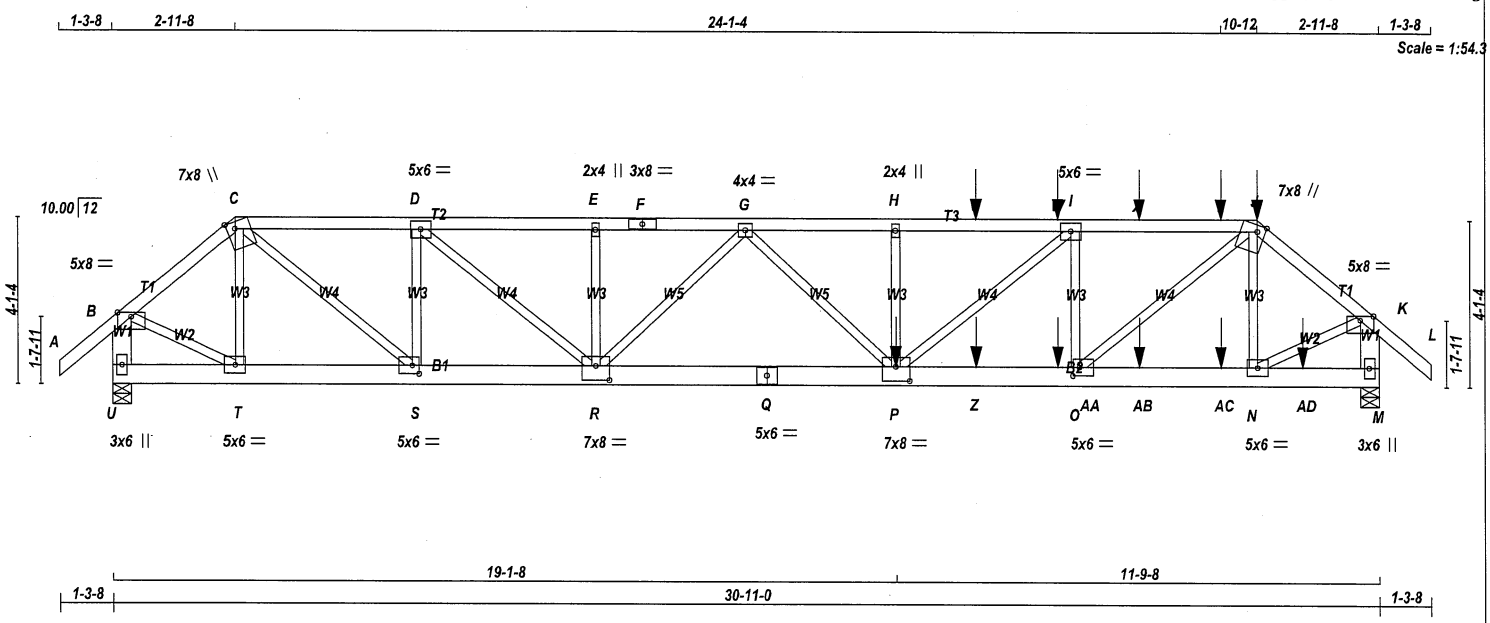

TOTAL WEIGHT = 2 X 148 = 295 lb

[M]

LUMBER

N. L. G. A. RULES

CHORDS	SIZE		LUMBER	DESCR.
A - C	2x4	DRY	No.2	SPF
C - F	2x4	DRY	No.2	SPF
F - J	2x4	DRY	No.2	SPF
J - L	2x4	DRY	No.2	SPF
U - B	2x6	DRY	No.2	SPF
M - K	2x6	DRY	No.2	SPF
U - Q	2x6	DRY	No.2	SPF
Q - M	2x6	DRY	No.2	SPF
ALL WEBS EXCEPT	2x3	DRY	No.2	SPF

DRY: SEASONED LUMBER.

DESIGN CONSISTS OF 2 TRUSSES BUILT SEPARATELY THEN FASTENED TOGETHER AS FOLLOWS:

CHORDS	#ROWS	SURFACE SPACING (IN)	LOAD(PLF)
TOP CHORDS : (0.122"X3") SPIRAL NAILS			
A- C	1	12	TOP
C- F	1	12	TOP
F- J	1	12	SIDE(61.0)
J- L	1	12	SIDE(61.0)
U- B	2	12	TOP
M- K	2	12	TOP
BOTTOM CHORDS : (0.122"X3") SPIRAL NAILS			
U- Q	2	12	TOP
Q- M	2	12	SIDE(183.1)
WEBS : (0.122"X3") SPIRAL NAILS			
2x3	1	6	
H- P	1	4	SIDE(368.7)
E- R	1	4	

NAILS TO BE DRIVEN FROM ONE SIDE ONLY.

GIRDER NAILING ASSUMES NAILED HANGERS ARE FASTENED WITH MIN. 3-0 INCH NAILS.

TOP - COMPONENTS ARE LOADED FROM THE TOP AND MUST BE PLACED ON TOP EDGE OF ALL PLIES FOR THE LOAD TO BE TRANSFERRED TO EACH PLY.

LICENSED PROFESSIONAL ENGINEER
06-24-22
H. J. G. ALVES
100009024
PROVINCE OF ONTARIO

Structural component only
DWG# T-2215308

DIMENSIONS, SUPPORTS AND LOADINGS SPECIFIED BY FABRICATOR TO BE VERIFIED BY BUILDING DESIGNER

BEARINGS

JT	FACTORED GROSS REACTION VERT	HORZ	MAXIMUM GROSS REACTION DOWN	HORZ	UPLIFT	INPUT BRG IN-SX	REQRD BRG IN-SX
U	3159	0	3159	0	0	5-8	5-8
M	4271	0	4271	0	0	5-8	5-8

UNFACTORED REACTIONS

JT	1ST LCASE COMBINED	MAX./MIN. COMPONENT REACTIONS SNOW	LIVE	PERM.LIVE	WIND	DEAD	SOIL
U	2209	1591 / 0	0 / 0	0 / 0	0 / 0	618 / 0	0 / 0
M	2986	2152 / 0	0 / 0	0 / 0	0 / 0	835 / 0	0 / 0

BEARING MATERIAL TO BE SPF NO.2 OR BETTER AT JOINT(S) U, M

BRACING

TOP CHORD TO BE SHEATHED OR MAX. PURLIN SPACING = 2.76 FT.
MAX. UNBRACED BOTTOM CHORD LENGTH = 10.00 FT OR RIGID CEILING DIRECTLY APPLIED.

ALL PITCH BREAKS AND PERIMETER CORNER JOINTS MUST BE LATERALLY RESTRAINED.

LOADING

TOTAL LOAD CASES: (4)

CHORDS

MEMB. FR-TO	MAX. FACTORED FORCE (LBS)	FACTORED VERT. LOAD (PLF) FROM	TO	LC1 MAX CSI (LC)	MAX. UNBRAC LENGTH
A- B	0 / 50	-112.4	-112.4	0.09 (1)	10.00
B- C	-2990 / 0	-112.4	-112.4	0.13 (1)	5.22
C- D	-5050 / 0	-112.4	-112.4	0.29 (1)	4.07
D- E	-7071 / 0	-112.4	-112.4	0.40 (1)	3.41
E- F	-7071 / 0	-112.4	-112.4	0.29 (1)	3.52
F- G	-7071 / 0	-112.4	-112.4	0.29 (1)	3.52
G- H	-8964 / 0	-112.4	-112.4	0.41 (1)	3.04
H- V	-8964 / 0	-112.4	-112.4	0.67 (1)	2.76
V- W	-8964 / 0	-112.4	-112.4	0.67 (1)	2.76
W- I	-8964 / 0	-112.4	-112.4	0.67 (1)	2.76
I- X	-6710 / 0	-112.4	-112.4	0.51 (1)	3.36
X- Y	-6710 / 0	-112.4	-112.4	0.51 (1)	3.36
Y- J	-6710 / 0	-112.4	-112.4	0.51 (1)	3.36
J- K	-4160 / 0	-112.4	-112.4	0.16 (1)	4.54
K- L	0 / 50	-112.4	-112.4	0.09 (1)	10.00
U- B	-3158 / 0	0.0	0.0	0.12 (1)	7.77
M- K	-4267 / 0	0.0	0.0	0.16 (1)	6.93
U- T	0 / 0	-18.5	-18.5	0.03 (1)	10.00
T- S	0 / 2267	-18.5	-18.5	0.18 (1)	10.00
S- R	0 / 5050	-18.5	-18.5	0.36 (1)	10.00
R- Q	0 / 8223	-18.5	-18.5	0.62 (1)	10.00
Q- P	0 / 8223	-18.5	-18.5	0.62 (1)	10.00
P- Z	0 / 6710	-18.5	-18.5	0.51 (1)	10.00
Z-AA	0 / 6710	-18.5	-18.5	0.51 (1)	10.00
AA- O	0 / 6710	-18.5	-18.5	0.51 (1)	10.00
O-AB	0 / 3154	-18.5	-18.5	0.24 (1)	10.00
AB-AC	0 / 3154	-18.5	-18.5	0.24 (1)	10.00
AC- N	0 / 3154	-18.5	-18.5	0.24 (1)	10.00
N-AD	0 / 0	-18.5	-18.5	0.04 (1)	10.00
AD- M	0 / 0	-18.5	-18.5	0.04 (1)	10.00

WEBS

MEMB. FR-TO	MAX. FACTORED FORCE (LBS)	MAX CSI (LC)
T- C	-779 / 0	0.10 (1)
C- S	0 / 3617	0.45 (1)
S- D	-2274 / 0	0.29 (1)
D- R	0 / 2658	0.33 (1)
R- E	-422 / 0	0.05 (1)
P- H	-477 / 0	0.06 (1)
P- I	0 / 2965	0.37 (1)
O- I	-2830 / 0	0.36 (1)
O- J	0 / 4621	0.57 (1)
N- J	-1079 / 0	0.14 (1)
B- T	0 / 2464	0.30 (1)
N- K	0 / 3427	0.42 (1)
R- G	-1643 / 0	0.38 (1)
G- P	0 / 1057	0.13 (1)

SPECIFIED CONCENTRATED LOADS (LBS)

JT	LOC.	LC1	MAX-	MAX+	FACE	DIR.	TYPE	HEEL	CONN.
J	27-11-8	-30	-30	---	FRONT	VERT	DEAD	---	C1
J	27-11-8	-159	-159	---	FRONT	VERT	SNOW	---	C1
P	19-1-8	-1476	-1476	---	BACK	VERT	TOTAL	---	C1
V	21-0-12	-93	-93	---	BACK	VERT	TOTAL	---	C1
W	23-0-12	-93	-93	---	BACK	VERT	TOTAL	---	C1
X	25-0-12	-93	-93	---	BACK	VERT	TOTAL	---	C1
Y	27-0-12	-97	-97	---	BACK	VERT	TOTAL	---	C1
Z	21-0-12	-21	-21	---	BACK	VERT	TOTAL	---	C1

DESIGN CRITERIA

*** SPECIAL LOADS ANALYSIS ***
GEOMETRY AND/OR BASIC LOADS CHANGED BY USER.
LOADS WERE DERIVED FROM USER INPUT
NO FURTHER MODIFICATIONS WERE MADE

SPECIFIED LOADS:

TOP	CH.	LL	=	32.5	PSF
		DL	=	6.0	PSF
BOT	CH.	LL	=	0.0	PSF
		DL	=	7.4	PSF
TOTAL	LOAD		=	45.9	PSF

SPACING = 24.0 IN. C/C

LOADING IN FLAT SECTION BASED ON A SLOPE OF 6.00/12

*** NON STANDARD GIRDER ***
ADDT'L USER-DEFINED LOADS APPLIED TO ALL LOAD CASES.

THIS TRUSS IS DESIGNED FOR RESIDENTIAL OR SMALL BUILDING REQUIREMENTS OF PART 9, NBCC 2015

THIS DESIGN COMPLIES WITH:
- PART 9 OF BCBC 2018 , ABC 2019
- PART 9 OF OBC 2012 (2019 AMENDMENT)
- CSA 086-14
- TPIC 2014

(55 % OF 43.9 P.S.F. G.S.L. PLUS 8.4 P.S.F. RAIN LOAD) EQUALS 32.5 P.S.F. SPECIFIED ROOF LIVE LOAD

ALLOWABLE DEFL.(LL)= L/360 (1.03")
CALCULATED VERT. DEFL.(LL) = L/ 999 (0.22")
ALLOWABLE DEFL.(TL)= L/360 (1.03")
CALCULATED VERT. DEFL.(TL) = L/ 961 (0.39")

CSI: TC=0.67/1.00 (H-I:1) , BC=0.62/1.00 (P-R:1) , WB=0.57/1.00 (J-O:1) , SSI=0.21/1.00 (H-I:1)

DOL LUMBER=1.00 NAIL=1.00 LS BEND=1.00 COMP=1.00 SHEAR=1.00 TENS= 1.00

COMPANION LIVE LOAD FACTOR = 1.00

AUTOSOLVE HEELS OFF

TRUSS PLATE MANUFACTURER IS NOT RESPONSIBLE FOR QUALITY CONTROL IN THE TRUSS MANUFACTURING PLANT .

NAIL VALUES

PLATE	GRIP(DRY) (PSI) MAX	MIN	SHEAR (PLI) MAX	MIN	SECTION (PLI) MAX	MIN
MT20	650	371	1747	788	1987	1873

PLATE PLACEMENT TOL. = 0.250 inches

PLATE ROTATION TOL. = 5.0 Deg.

JSI GRIP= 0.87 (O) (INPUT = 0.90)
JSI METAL= 0.80 (Q) (INPUT = 1.00)

REVIEWED

CONTINUED ON PAGE 2

JOB NAME	TRUSS NAME	QUANTITY	PLY	JOB DESC.	DRWG NO.
423613	T27	1	2	BAYVIEW WELLINGTON TRUSS DESC.	

PLATES (table is in inches)

JT	TYPE	PLATES	W	LEN	Y	X
B	TMVW-p	MT20	5.0	8.0	Edge	
C	TTWW+m	MT20	7.0	8.0	Edge	2.25
D	TMWW-t	MT20	5.0	6.0		
E	TMW+w	MT20	2.0	4.0		
F	TS-t	MT20	3.0	8.0		
G	TMWW-t	MT20	4.0	4.0		
H	TMW+w	MT20	2.0	4.0		
I	TMWW-t	MT20	5.0	6.0		
J	TTWW+m	MT20	7.0	8.0	Edge	2.25
K	TMVW-p	MT20	5.0	8.0	Edge	
M	BMV1+p	MT20	3.0	6.0		
N	BMWW-t	MT20	5.0	6.0		
O	BMWW-t	MT20	5.0	6.0	2.50	2.00
P	BMWWW-t	MT20	7.0	8.0	4.25	4.00
Q	BS-t	MT20	5.0	6.0		
R	BMWWW-t	MT20	7.0	8.0	4.25	4.00
S	BMWW-t	MT20	5.0	6.0	2.50	2.00
T	BMWW-t	MT20	5.0	6.0		
U	BMV1+p	MT20	3.0	6.0		

Edge - INDICATES REFERENCE CORNER OF PLATE TOUCHES EDGE OF CHORD.

NOTES- (1)
1) Lateral braces to be a minimum of 2X4 SPF #2.

SPECIFIED CONCENTRATED LOADS (LBS)

JT	LOC.	LC1	MAX-	MAX+	FACE	DIR.	TYPE	HEEL	CONN.
AA	23-0-12	-21	-21	---	BACK	VERT	TOTAL	---	C1
AB	25-0-12	-21	-21	---	BACK	VERT	TOTAL	---	C1
AC	27-0-12	-21	-21	---	BACK	VERT	TOTAL	---	C1
AD	29-0-12	-21	-21	---	BACK	VERT	TOTAL	---	C1

CONNECTION REQUIREMENTS

1) **C1:** A SUITABLE HANGER/MECHANICAL CONNECTION IS REQUIRED.

LICENSED PROFESSIONAL ENGINEER
06-24-22
H. J. G. ALVES
100009024
PROVINCE OF ONTARIO

Structural component only
DWG# T-2215308

REVIEWED

JOB NAME	TRUSS NAME	QUANTITY	PLY	JOB DESC.	DRWG NO.
423616	T30	1	2	BAYVIEW WELLINGTON TRUSS DESC.	

Tamarack Roof Truss, Burlington

Version 8.530 S Feb 23 2022 MiTek Industries, Inc. Fri Jun 24 14:55:01 2022 Page 1
ID:c3jyj23uDijq_8pvRKbkZpy75XW-1XkoxMVOSAeMsz3u3YCf76G_TaCf1W796r3I_xz32fu

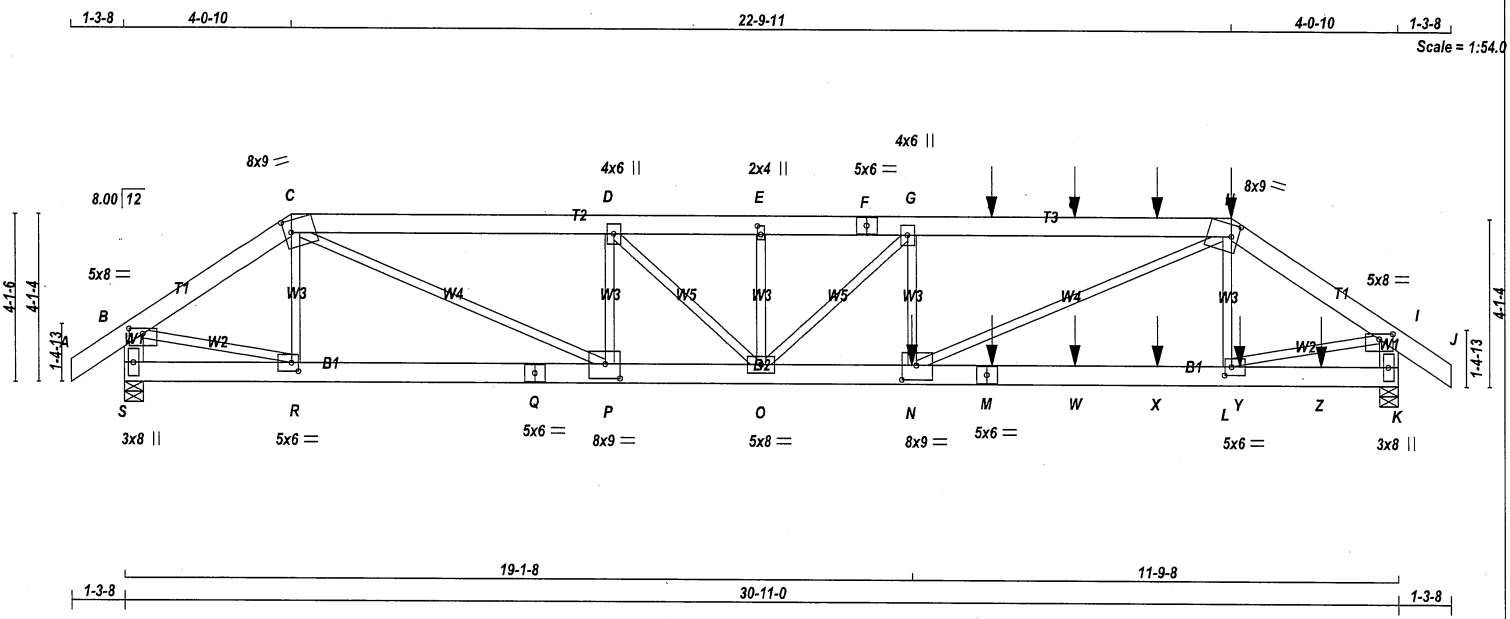

TOTAL WEIGHT = 2 X 163 = 325 lb

[M]

LUMBER

N. L. G. A. RULES

CHORDS	SIZE		LUMBER	DESCR.
A - C	2x6	DRY	No.2	SPF
C - F	2x6	DRY	No.2	SPF
F - H	2x6	DRY	No.2	SPF
H - J	2x6	DRY	No.2	SPF
S - B	2x6	DRY	No.2	SPF
K - I	2x6	DRY	No.2	SPF
S - Q	2x6	DRY	No.2	SPF
Q - M	2x6	DRY	No.2	SPF
M - K	2x6	DRY	No.2	SPF
ALL WEBS EXCEPT	2x3	DRY	No.2	SPF

DRY: SEASONED LUMBER.

DESIGN CONSISTS OF 2 TRUSSES BUILT SEPARATELY THEN FASTENED TOGETHER AS FOLLOWS:

CHORDS	#ROWS	SURFACE SPACING (IN)	LOAD(PLF)
TOP CHORDS : (0.122"X3") SPIRAL NAILS			
A- C	2	12	TOP
C- F	2	12	TOP
F- H	2	12	SIDE(61.0)
H- J	2	12	SIDE(122.0)
S- B	2	12	TOP
K- I	2	12	TOP
BOTTOM CHORDS : (0.122"X3") SPIRAL NAILS			
S- Q	2	12	TOP
Q- M	2	12	SIDE(183.1)
M- K	2	12	SIDE(183.1)
WEBS : (0.122"X3") SPIRAL NAILS			
2x3	1	6	
G- N	1	2	SIDE(669.4)
D- P	1	2	

NAILS TO BE DRIVEN FROM ONE SIDE ONLY.

GIRDER NAILING ASSUMES NAILED HANGERS ARE FASTENED WITH MIN. 3-0 INCH NAILS.

TOP - COMPONENTS ARE LOADED FROM THE TOP AND MUST BE PLACED ON TOP EDGE OF ALL PLIES FOR THE LOAD TO BE TRANSFERRED TO EACH PLY.

LICENSED PROFESSIONAL ENGINEER
06-24-22
H. J. G. ALVES
100009024
PROVINCE OF ONTARIO

Structural component only
DWG# T-2215317

DIMENSIONS, SUPPORTS AND LOADINGS SPECIFIED BY FABRICATOR TO BE VERIFIED BY BUILDING DESIGNER

BEARINGS

JT	FACTORED GROSS REACTION VERT	HORZ	MAXIMUM FACTORED GROSS REACTION DOWN	HORZ	UPLIFT	INPUT BRG IN-SX	REQRD BRG IN-SX
S	3626	0	3626	0	0	5-8	5-8
K	5065	0	5065	0	0	5-8	5-8

UNFACTORED REACTIONS

JT	1ST LCASE COMBINED	MAX./MIN. COMPONENT REACTIONS SNOW	LIVE	PERM.LIVE	WIND	DEAD	SOIL
S	2534	1836 / 0	0 / 0	0 / 0	0 / 0	698 / 0	0 / 0
K	3538	2568 / 0	0 / 0	0 / 0	0 / 0	970 / 0	0 / 0

BEARING MATERIAL TO BE SPF NO.2 OR BETTER AT JOINT(S) S, K

BRACING

TOP CHORD TO BE SHEATHED OR MAX. PURLIN SPACING = 2.99 FT.
MAX. UNBRACED BOTTOM CHORD LENGTH = 10.00 FT OR RIGID CEILING DIRECTLY APPLIED.

ALL PITCH BREAKS AND PERIMETER CORNER JOINTS MUST BE LATERALLY RESTRAINED.

LOADING

TOTAL LOAD CASES: (4)

CHORDS

MEMB. FR-TO	MAX. FACTORED FORCE (LBS)	FACTORED VERT. LOAD (PLF) FROM	TO	LC1 MAX CSI (LC)	MAX. UNBRAC LENGTH
A- B	0 / 44	-112.4	-112.4	0.04 (1)	10.00
B- C	-4405 / 0	-112.4	-112.4	0.11 (1)	5.37
C- D	-8784 / 0	-112.4	-112.4	0.43 (1)	3.80
D- E	-10336 / 0	-112.4	-112.4	0.33 (1)	3.58
E- F	-10336 / 0	-112.4	-112.4	0.40 (1)	3.49
F- G	-10336 / 0	-112.4	-112.4	0.40 (1)	3.49
G- T	-11688 / 0	-112.4	-112.4	0.75 (1)	2.99
T- U	-11688 / 0	-112.4	-112.4	0.75 (1)	2.99
U- V	-11688 / 0	-112.4	-112.4	0.75 (1)	2.99
V- H	-11688 / 0	-112.4	-112.4	0.75 (1)	2.99
H- I	-6374 / 0	-112.4	-112.4	0.14 (1)	4.61
I- J	0 / 44	-112.4	-112.4	0.04 (1)	10.00
S- B	-3635 / 0	0.0	0.0	0.13 (1)	7.37
K- I	-5084 / 0	0.0	0.0	0.18 (1)	6.46
S- R	0 / 0	-18.5	-18.5	0.07 (1)	10.00
R- Q	0 / 3639	-18.5	-18.5	0.31 (1)	10.00
Q- P	0 / 3639	-18.5	-18.5	0.31 (1)	10.00
P- O	0 / 8784	-18.5	-18.5	0.63 (1)	10.00
O- N	0 / 11688	-18.5	-18.5	0.88 (1)	10.00
N- M	0 / 5267	-18.5	-18.5	0.47 (1)	10.00
M- W	0 / 5267	-18.5	-18.5	0.47 (1)	10.00
W- X	0 / 5267	-18.5	-18.5	0.47 (1)	10.00
X- L	0 / 5267	-18.5	-18.5	0.47 (1)	10.00
L- Y	0 / 0	-18.5	-18.5	0.11 (1)	10.00
Y- Z	0 / 0	-18.5	-18.5	0.11 (1)	10.00
Z- K	0 / 0	-18.5	-18.5	0.11 (1)	10.00

WEBS

MEMB. FR-TO	MAX. FACTORED FORCE (LBS)	MAX CSI (LC)
R- C	-585 / 0	0.07 (1)
C- P	0 / 5681	0.70 (1)
P- D	-2392 / 0	0.29 (1)
D- O	0 / 2189	0.27 (1)
O- E	-19 / 0	0.00 (4)
O- G	-1907 / 0	0.41 (1)
N- G	0 / 234	0.04 (4)
N- H	0 / 7091	0.88 (1)
L- H	-795 / 0	0.10 (1)
B- R	0 / 3740	0.46 (1)
L- I	0 / 5411	0.67 (1)

SPECIFIED CONCENTRATED LOADS (LBS)

JT	LOC.	LC1	MAX-	MAX+	FACE	DIR.	TYPE	HEEL	CONN.
H	26-10-6	-41	-41	---	FRONT	VERT	DEAD	---	C1
H	26-10-6	-97	-97	---	BACK	VERT	TOTAL	---	C1
H	26-10-6	-217	-217	---	FRONT	VERT	SNOW	---	C1
L	27-0-12	-21	-21	---	BACK	VERT	TOTAL	---	C1
M	21-0-12	-21	-21	---	BACK	VERT	TOTAL	---	C1
N	19-1-8	-2278	-2278	---	BACK	VERT	TOTAL	---	C1
T	21-0-12	-93	-93	---	BACK	VERT	TOTAL	---	C1
U	23-0-12	-93	-93	---	BACK	VERT	TOTAL	---	C1
V	25-0-12	-93	-93	---	BACK	VERT	TOTAL	---	C1
W	23-0-12	-21	-21	---	BACK	VERT	TOTAL	---	C1
X	25-0-12	-21	-21	---	BACK	VERT	TOTAL	---	C1
Z	29-0-12	-21	-21	---	BACK	VERT	TOTAL	---	C1

DESIGN CRITERIA

*** SPECIAL LOADS ANALYSIS ***
GEOMETRY AND/OR BASIC LOADS CHANGED BY USER.
LOADS WERE DERIVED FROM USER INPUT
NO FURTHER MODIFICATIONS WERE MADE

SPECIFIED LOADS:

TOP	CH.	LL	=	32.5	PSF
		DL	=	6.0	PSF
BOT	CH.	LL	=	0.0	PSF
		DL	=	7.4	PSF
TOTAL	LOAD		=	45.9	PSF

SPACING = 24.0 IN. C/C

LOADING IN FLAT SECTION BASED ON A SLOPE OF 6.00/12

*** NON STANDARD GIRDER ***
ADDT'L USER-DEFINED LOADS APPLIED TO ALL LOAD CASES.

THIS TRUSS IS DESIGNED FOR RESIDENTIAL OR SMALL BUILDING REQUIREMENTS OF PART 9, NBCC 2015

THIS DESIGN COMPLIES WITH:
- PART 9 OF BCBC 2018 , ABC 2019
- PART 9 OF OBC 2012 (2019 AMENDMENT)
- CSA 086-14
- TPIC 2014

(55 % OF 43.9 P.S.F. G.S.L. PLUS 8.4 P.S.F. RAIN LOAD) EQUALS 32.5 P.S.F. SPECIFIED ROOF LIVE LOAD

ALLOWABLE DEFL.(LL)= L/360 (1.03")
CALCULATED VERT. DEFL.(LL) = L/ 999 (0.26")
ALLOWABLE DEFL.(TL)= L/360 (1.03")
CALCULATED VERT. DEFL.(TL) = L/ 823 (0.45")

CSI: TC=0.75/1.00 (G-H:1) , BC=0.88/1.00 (N-O:1) , WB=0.88/1.00 (H-N:1) , SSI=0.24/1.00 (G-H:1)

DOL LUMBER=1.00 NAIL=1.00 LS BEND=1.00 COMP=1.00 SHEAR=1.00 TENS= 1.00

COMPANION LIVE LOAD FACTOR = 1.00

AUTOSOLVE HEELS OFF

TRUSS PLATE MANUFACTURER IS NOT RESPONSIBLE FOR QUALITY CONTROL IN THE TRUSS MANUFACTURING PLANT .

NAIL VALUES

PLATE	GRIP(DRY) (PSI) MAX	MIN	SHEAR (PLI) MAX	MIN	SECTION (PLI) MAX	MIN
MT20	650	371	1747	788	1987	1873

PLATE PLACEMENT TOL. = 0.250 inches

PLATE ROTATION TOL. = 5.0 Deg.

JSI GRIP= 0.88 (R) (INPUT = 0.90)
JSI METAL= 0.61 (Q) (INPUT = 1.00)

CONTINUED ON PAGE 2

REVIEWED

PLATES (table is in inches)

JT	TYPE	PLATES	W	LEN	Y	X
B	TMVW-p	MT20	5.0	8.0	1.50	4.00
C	TTWW-m	MT20	8.0	9.0	3.50	2.00
D	TMWW+t	MT20	4.0	6.0		
E	TMW+w	MT20	2.0	4.0	2.50	1.00
F	TS-t	MT20	5.0	6.0		
G	TMWW+t	MT20	4.0	6.0		
H	TTWW-m	MT20	8.0	9.0	3.50	2.00
I	TMVW-p	MT20	5.0	8.0	1.50	4.00
K	BMV1+p	MT20	3.0	8.0		
L	BMWW-t	MT20	5.0	6.0	2.50	2.00
M	BS-t	MT20	5.0	6.0		
N	BMWW-t	MT20	8.0	9.0	4.25	4.25
O	BMWWW-t	MT20	5.0	8.0		
P	BMWW-t	MT20	8.0	9.0	4.25	4.25
Q	BS-t	MT20	5.0	6.0		
R	BMWW-t	MT20	5.0	6.0	2.50	2.00
S	BMV1+p	MT20	3.0	8.0		

NOTES- (1)

1) Lateral braces to be a minimum of 2X4 SPF #2.

CONNECTION REQUIREMENTS

1) **C1:** A SUITABLE HANGER/MECHANICAL CONNECTION IS REQUIRED.

LICENSED PROFESSIONAL ENGINEER
06-24-22
H. J. G. ALVES
100009024
PROVINCE OF ONTARIO

Structural component only
DWG# T-2215317

REVIEWED

JOB NAME	TRUSS NAME	QUANTITY	PLY	JOB DESC.	DRWG NO.
423616	T31	2	1	BAYVIEW WELLINGTON TRUSS DESC.	

Tamarack Roof Truss, Burlington

Version 8.530 S Feb 23 2022 MiTek Industries, Inc. Fri Jun 24 14:55:02 2022 Page 1
ID:c3jyj23uDijq_8pvRKbkZpy75XW-WkIB9iW0DUmDU7e5dFj_gKp7h_dSm48ILVpIXNz32ft

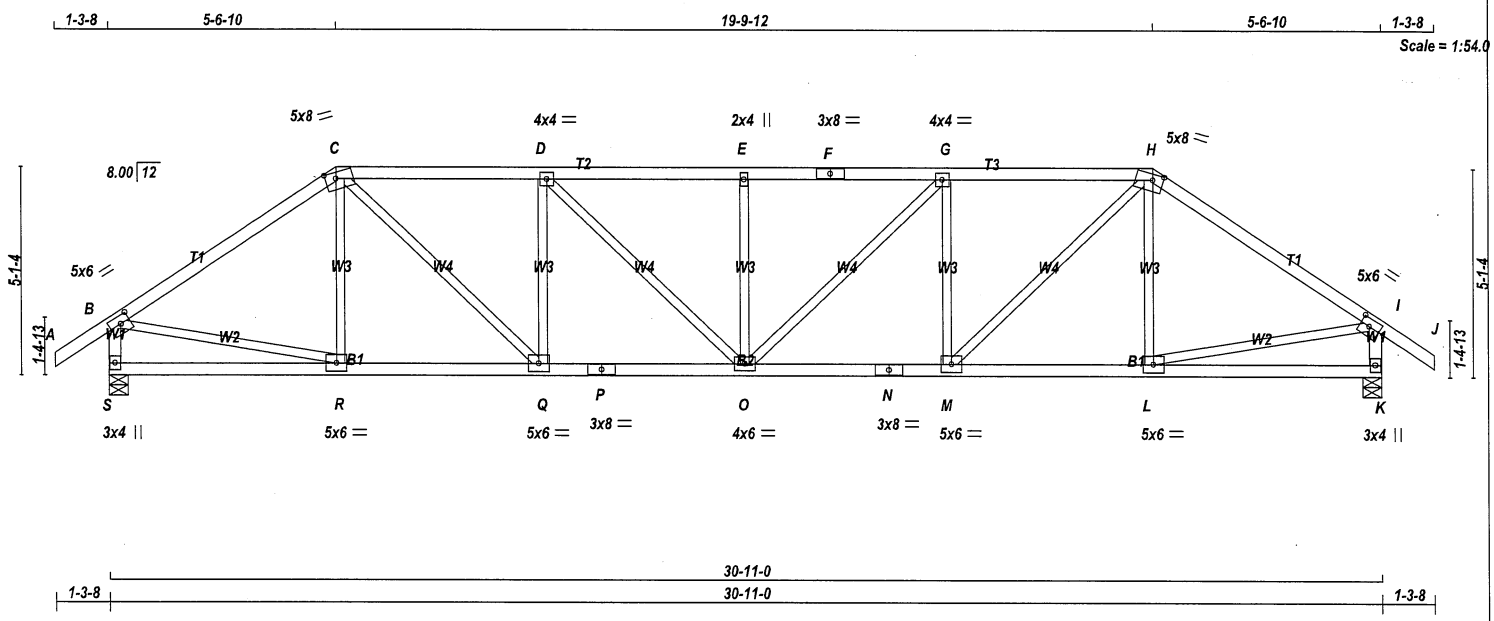

TOTAL WEIGHT = 2 X 128 = 255 lb

[M]

LUMBER

N. L. G. A. RULES

CHORDS	SIZE		LUMBER	DESCR.
A - C	2x4	DRY	No.2	SPF
C - F	2x4	DRY	No.2	SPF
F - H	2x4	DRY	No.2	SPF
H - J	2x4	DRY	No.2	SPF
S - B	2x4	DRY	No.2	SPF
K - I	2x4	DRY	No.2	SPF
S - P	2x4	DRY	No.2	SPF
P - N	2x4	DRY	No.2	SPF
N - K	2x4	DRY	No.2	SPF
ALL WEBS EXCEPT	2x3	DRY	No.2	SPF

DRY: SEASONED LUMBER.

PLATES (table is in inches)

JT	TYPE	PLATES	W	LEN	Y	X
B	TMVW-t	MT20	5.0	6.0	2.25	2.75
C	TTWW-m	MT20	5.0	8.0	1.75	3.00
D	TMWW-t	MT20	4.0	4.0		
E	TMW+w	MT20	2.0	4.0		
F	TS-t	MT20	3.0	8.0		
G	TMWW-t	MT20	4.0	4.0		
H	TTWW-m	MT20	5.0	8.0	1.75	3.00
I	TMVW-t	MT20	5.0	6.0	2.25	2.75
K	BMV1+p	MT20	3.0	4.0		
L, M, Q, R						
L	BMWW-t	MT20	5.0	6.0		
N	BS-t	MT20	3.0	8.0		
O	BMWWW-t	MT20	4.0	6.0		
P	BS-t	MT20	3.0	8.0		
S	BMV1+p	MT20	3.0	4.0		

NOTES- (1)
1) Lateral braces to be a minimum of 2X4 SPF #2.

LICENSED PROFESSIONAL ENGINEER
06-24-22
H. J. G. ALVES
100009024
PROVINCE OF ONTARIO

Structural component only
DWG# T-2215318

DIMENSIONS, SUPPORTS AND LOADINGS SPECIFIED BY FABRICATOR TO BE VERIFIED BY BUILDING DESIGNER

BEARINGS

JT	FACTORED GROSS REACTION VERT	HORZ	MAXIMUM FACTORED GROSS REACTION DOWN	HORZ	UPLIFT	INPUT BRG IN-SX	REQRD BRG IN-SX
S	2178	0	2178	0	0	5-8	5-8
K	2178	0	2178	0	0	5-8	5-8

UNFACTORED REACTIONS

JT	1ST LCASE COMBINED	MAX./MIN. COMPONENT REACTIONS SNOW	LIVE	PERM.LIVE	WIND	DEAD	SOIL
S	1524	1093 / 0	0 / 0	0 / 0	0 / 0	431 / 0	0 / 0
K	1524	1093 / 0	0 / 0	0 / 0	0 / 0	431 / 0	0 / 0

BEARING MATERIAL TO BE SPF NO.2 OR BETTER AT JOINT(S) S, K

BRACING

TOP CHORD TO BE SHEATHED OR MAX. PURLIN SPACING = 3.29 FT.
MAX. UNBRACED BOTTOM CHORD LENGTH = 10.00 FT OR RIGID CEILING DIRECTLY APPLIED.

ALL PITCH BREAKS AND PERIMETER CORNER JOINTS MUST BE LATERALLY RESTRAINED.

LOADING

TOTAL LOAD CASES: (4)

CHORDS

MEMB. FR-TO	MAX. FACTORED FORCE (LBS)	FACTORED VERT. LOAD (PLF) FROM	TO	LC1 CSI (LC)	MAX UNBRAC LENGTH
A- B	0 / 43	-112.4	-112.4	0.15 (1)	10.00
B- C	-2333 / 0	-112.4	-112.4	0.84 (1)	3.50
C- D	-2986 / 0	-112.4	-112.4	0.58 (1)	3.48
D- E	-3291 / 0	-112.4	-112.4	0.61 (1)	3.29
E- F	-3291 / 0	-112.4	-112.4	0.61 (1)	3.29
F- G	-3291 / 0	-112.4	-112.4	0.61 (1)	3.29
G- H	-2987 / 0	-112.4	-112.4	0.58 (1)	3.47
H- I	-2334 / 0	-112.4	-112.4	0.84 (1)	3.50
I- J	0 / 43	-112.4	-112.4	0.15 (1)	10.00
S- B	-2135 / 0	0.0	0.0	0.22 (1)	5.81
K- I	-2135 / 0	0.0	0.0	0.22 (1)	5.81
S- R	0 / 0	-18.5	-18.5	0.13 (4)	10.00
R- Q	0 / 1933	-18.5	-18.5	0.38 (1)	10.00
Q- P	0 / 2986	-18.5	-18.5	0.53 (1)	10.00
P- O	0 / 2986	-18.5	-18.5	0.53 (1)	10.00
O- N	0 / 2987	-18.5	-18.5	0.53 (1)	10.00
N- M	0 / 2987	-18.5	-18.5	0.53 (1)	10.00
M- L	0 / 1934	-18.5	-18.5	0.38 (1)	10.00
L- K	0 / 0	-18.5	-18.5	0.13 (4)	10.00

WEBS

MEMB. FR-TO	MAX. FACTORED FORCE (LBS)	MAX CSI (LC)
R- C	-258 / 19	0.10 (1)
C- Q	0 / 1459	0.33 (1)
Q- D	-925 / 0	0.36 (1)
D- O	0 / 427	0.10 (1)
O- E	-507 / 0	0.20 (1)
O- G	0 / 426	0.10 (1)
M- G	-925 / 0	0.36 (1)
M- H	0 / 1458	0.33 (1)
L- H	-257 / 19	0.10 (1)
B- R	0 / 1974	0.44 (1)
L- I	0 / 1975	0.44 (1)

DESIGN CRITERIA

SPECIFIED LOADS:

TOP CH.	LL	=	32.5	PSF
	DL	=	6.0	PSF
BOT CH.	LL	=	0.0	PSF
	DL	=	7.4	PSF
TOTAL LOAD		=	45.9	PSF

SPACING = 24.0 IN. C/C

LOADING IN FLAT SECTION BASED ON A SLOPE OF 6.00/12

THIS TRUSS IS DESIGNED FOR RESIDENTIAL OR SMALL BUILDING REQUIREMENTS OF PART 9, NBCC 2015

THIS DESIGN COMPLIES WITH:
- PART 9 OF BCBC 2018 , ABC 2019
- PART 9 OF OBC 2012 (2019 AMENDMENT)
- CSA 086-14
- TPIC 2014

(55 % OF 43.9 P.S.F. G.S.L. PLUS 8.4 P.S.F. RAIN LOAD) EQUALS 32.5 P.S.F. SPECIFIED ROOF LIVE LOAD

ALLOWABLE DEFL.(LL)= L/360 (1.03")
CALCULATED VERT. DEFL.(LL) = L/ 999 (0.17")
ALLOWABLE DEFL.(TL)= L/360 (1.03")
CALCULATED VERT. DEFL.(TL) = L/ 999 (0.29")

CSI: TC=0.84/1.00 (H-I:1) , BC=0.53/1.00 (M-O:1) , WB=0.44/1.00 (I-L:1) , SSI=0.26/1.00 (C-D:1)

DOL LUMBER=1.00 NAIL=1.00 LS BEND=1.10 COMP=1.10 SHEAR=1.10 TENS= 1.10

COMPANION LIVE LOAD FACTOR = 1.00

TRUSS PLATE MANUFACTURER IS NOT RESPONSIBLE FOR QUALITY CONTROL IN THE TRUSS MANUFACTURING PLANT .

NAIL VALUES

PLATE	GRIP(DRY) (PSI) MAX	MIN	SHEAR (PLI) MAX	MIN	SECTION (PLI) MAX	MIN
MT20	650	371	1747	788	1987	1873

PLATE PLACEMENT TOL. = 0.250 inches

PLATE ROTATION TOL. = 5.0 Deg.

JSI GRIP= 0.90 (H) (INPUT = 0.90)
JSI METAL= 0.90 (P) (INPUT = 1.00)

REVIEWED

JOB NAME	TRUSS NAME	QUANTITY	PLY	JOB DESC.	DRWG NO.
423616	T32	2	1	BAYVIEW WELLINGTON TRUSS DESC.	

Tamarack Roof Truss, Burlington

Version 8.530 S Feb 23 2022 MiTek Industries, Inc. Fri Jun 24 14:55:02 2022 Page 1
ID:c3jyj23uDijq_8pvRKbkZpy75XW-WkIB9iW0DUmDU7e5dFj_gKpAS_e5mxTILVpIXNz32ft

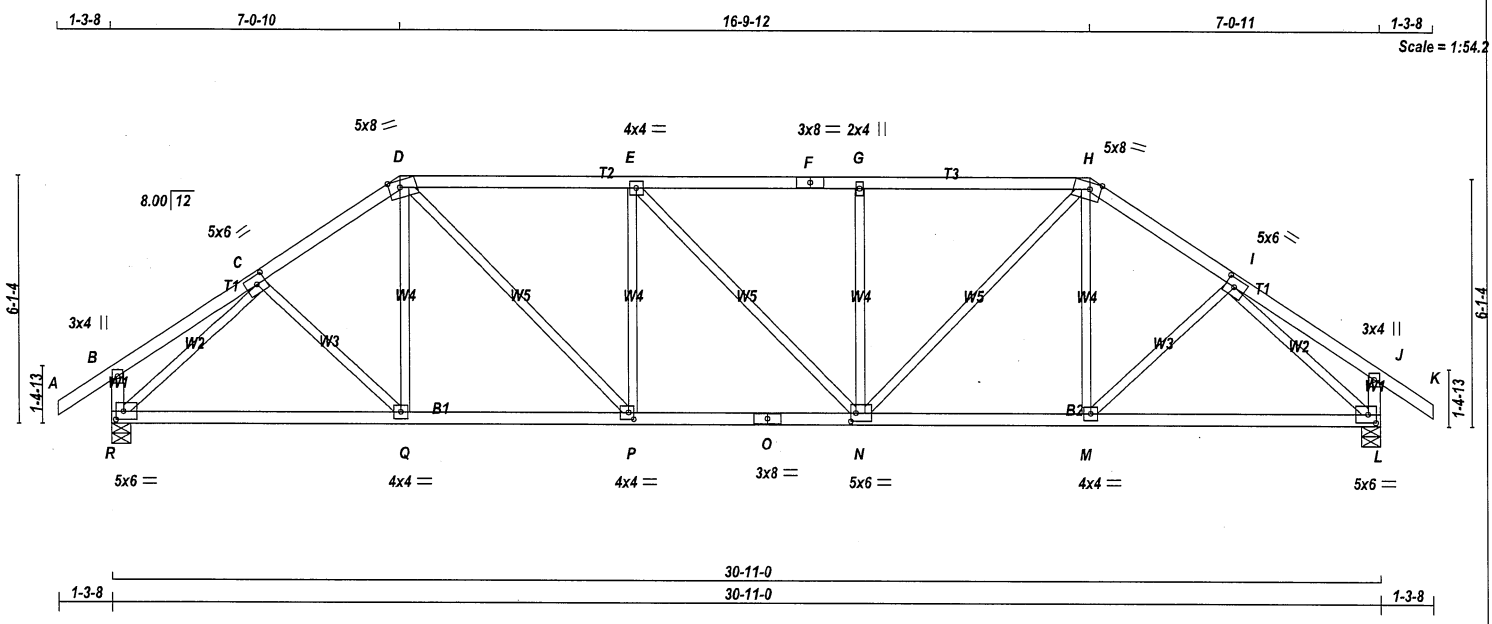

TOTAL WEIGHT = 2 X 132 = 263 lb

[M]

LUMBER

N. L. G. A. RULES

CHORDS	SIZE		LUMBER	DESCR.
A - D	2x4	DRY	No.2	SPF
D - F	2x4	DRY	No.2	SPF
F - H	2x4	DRY	No.2	SPF
H - K	2x4	DRY	No.2	SPF
R - B	2x4	DRY	No.2	SPF
L - J	2x4	DRY	No.2	SPF
R - O	2x4	DRY	No.2	SPF
O - L	2x4	DRY	No.2	SPF
ALL WEBS EXCEPT	2x3	DRY	No.2	SPF

DRY: SEASONED LUMBER.

PLATES (table is in inches)

JT	TYPE	PLATES	W	LEN	Y	X
B	TMV+p	MT20	3.0	4.0		
C	TMWW-t	MT20	5.0	6.0	2.50	2.75
D	TTWW-m	MT20	5.0	8.0	2.00	3.25
E	TMWW-t	MT20	4.0	4.0		
F	TS-t	MT20	3.0	8.0		
G	TMW+w	MT20	2.0	4.0		
H	TTWW-m	MT20	5.0	8.0	2.00	3.25
I	TMWW-t	MT20	5.0	6.0	2.50	2.75
J	TMV+p	MT20	3.0	4.0		
L	BMVW1-t	MT20	5.0	6.0	2.50	2.25
M	BMWW-t	MT20	4.0	4.0		
N	BMWWW-t	MT20	5.0	6.0	2.50	1.50
O	BS-t	MT20	3.0	8.0		
P	BMWW-t	MT20	4.0	4.0	2.00	1.50
Q	BMWW-t	MT20	4.0	4.0		
R	BMVW1-t	MT20	5.0	6.0	2.50	2.25

NOTES- (1)
1) Lateral braces to be a minimum of 2X4 SPF #2.

DIMENSIONS, SUPPORTS AND LOADINGS SPECIFIED BY FABRICATOR TO BE VERIFIED BY BUILDING DESIGNER

BEARINGS

JT	FACTORED GROSS REACTION VERT	HORZ	MAXIMUM FACTORED GROSS REACTION DOWN	HORZ	UPLIFT	INPUT BRG IN-SX	REQRD BRG IN-SX
R	2178	0	2178	0	0	5-8	5-8
L	2178	0	2178	0	0	5-8	5-8

UNFACTORED REACTIONS

JT	1ST LCASE COMBINED	MAX./MIN. COMPONENT REACTIONS SNOW	LIVE	PERM.LIVE	WIND	DEAD	SOIL
R	1524	1093 / 0	0 / 0	0 / 0	0 / 0	431 / 0	0 / 0
L	1524	1093 / 0	0 / 0	0 / 0	0 / 0	431 / 0	0 / 0

BEARING MATERIAL TO BE SPF NO.2 OR BETTER AT JOINT(S) R, L

BRACING

TOP CHORD TO BE SHEATHED OR MAX. PURLIN SPACING = 3.54 FT.
MAX. UNBRACED BOTTOM CHORD LENGTH = 10.00 FT OR RIGID CEILING DIRECTLY APPLIED.

ALL PITCH BREAKS AND PERIMETER CORNER JOINTS MUST BE LATERALLY RESTRAINED.

LOADING

TOTAL LOAD CASES: (4)

CHORDS

MEMB. FR-TO	MAX. FACTORED FORCE (LBS)	FACTORED VERT. LOAD (PLF) FROM	TO	LC1	MAX CSI (LC)	MAX. UNBRAC LENGTH
A- B	0 / 43	-112.4	-112.4	0.15 (1)	10.00	
B- C	0 / 23	-112.4	-112.4	0.20 (1)	10.00	
C- D	-2327 / 0	-112.4	-112.4	0.28 (1)	4.24	
D- E	-2669 / 0	-112.4	-112.4	0.67 (1)	3.54	
E- F	-2667 / 0	-112.4	-112.4	0.66 (1)	3.54	
F- G	-2667 / 0	-112.4	-112.4	0.66 (1)	3.54	
G- H	-2667 / 0	-112.4	-112.4	0.66 (1)	3.55	
H- I	-2328 / 0	-112.4	-112.4	0.28 (1)	4.24	
I- J	0 / 23	-112.4	-112.4	0.20 (1)	10.00	
J- K	0 / 43	-112.4	-112.4	0.15 (1)	10.00	
R- B	-311 / 0	0.0	0.0	0.03 (1)	7.81	
L- J	-311 / 0	0.0	0.0	0.03 (1)	7.81	
R- Q	0 / 1860	-18.5	-18.5	0.41 (1)	10.00	
Q- P	0 / 1915	-18.5	-18.5	0.42 (1)	10.00	
P- O	0 / 2669	-18.5	-18.5	0.49 (1)	10.00	
O- N	0 / 2669	-18.5	-18.5	0.49 (1)	10.00	
N- M	0 / 1916	-18.5	-18.5	0.42 (1)	10.00	
M- L	0 / 1861	-18.5	-18.5	0.41 (1)	10.00	

WEBS

MEMB. FR-TO	MAX. FACTORED FORCE (LBS)	MAX CSI (LC)
C- Q	0 / 74	0.03 (4)
Q- D	0 / 105	0.04 (4)
D- P	0 / 1081	0.24 (1)
P- E	-681 / 0	0.40 (1)
E- N	-2 / 0	0.00 (1)
N- G	-680 / 0	0.40 (1)
N- H	0 / 1078	0.24 (1)
M- H	0 / 106	0.04 (4)
M- I	0 / 73	0.02 (4)
R- C	-2597 / 0	1.00 (1)
I- L	-2598 / 0	1.00 (1)

DESIGN CRITERIA

SPECIFIED LOADS:

TOP CH.	LL	=	32.5	PSF
	DL	=	6.0	PSF
BOT CH.	LL	=	0.0	PSF
	DL	=	7.4	PSF
TOTAL LOAD		=	45.9	PSF

SPACING = 24.0 IN. C/C

LOADING IN FLAT SECTION BASED ON A SLOPE OF 6.00/12

THIS TRUSS IS DESIGNED FOR RESIDENTIAL OR SMALL BUILDING REQUIREMENTS OF PART 9, NBCC 2015

THIS DESIGN COMPLIES WITH:
- PART 9 OF BCBC 2018 , ABC 2019
- PART 9 OF OBC 2012 (2019 AMENDMENT)
- CSA 086-14
- TPIC 2014

(55 % OF 43.9 P.S.F. G.S.L. PLUS 8.4 P.S.F. RAIN LOAD) EQUALS 32.5 P.S.F. SPECIFIED ROOF LIVE LOAD

ALLOWABLE DEFL.(LL)= L/360 (1.03")
CALCULATED VERT. DEFL.(LL) = L/ 999 (0.13")
ALLOWABLE DEFL.(TL)= L/360 (1.03")
CALCULATED VERT. DEFL.(TL) = L/ 999 (0.24")

CSI: TC=0.67/1.00 (D-E:1) , BC=0.49/1.00 (N-P:1) , WB=1.00/1.00 (I-L:1) , SSI=0.29/1.00 (D-E:1)

DOL LUMBER=1.00 NAIL=1.00 LS BEND=1.10 COMP=1.10 SHEAR=1.10 TENS= 1.10

COMPANION LIVE LOAD FACTOR = 1.00

TRUSS PLATE MANUFACTURER IS NOT RESPONSIBLE FOR QUALITY CONTROL IN THE TRUSS MANUFACTURING PLANT .

NAIL VALUES

PLATE	GRIP(DRY) (PSI) MAX	MIN	SHEAR (PLI) MAX	MIN	SECTION (PLI) MAX	MIN
MT20	650	371	1747	788	1987	1873

PLATE PLACEMENT TOL. = 0.250 inches

PLATE ROTATION TOL. = 5.0 Deg.

JSI GRIP= 0.89 (C) (INPUT = 0.90)
JSI METAL= 0.85 (O) (INPUT = 1.00)

LICENSED PROFESSIONAL ENGINEER
06-24-22
H. J. G. ALVES
100009024
PROVINCE OF ONTARIO

Structural component only
DWG# T-2215319

REVIEWED

JOB NAME	TRUSS NAME	QUANTITY	PLY	JOB DESC.	DRWG NO.
423616	T33	2	1	BAYVIEW WELLINGTON TRUSS DESC.	

Tamarack Roof Truss, Burlington

Version 8.530 S Feb 23 2022 MiTek Industries, Inc. Fri Jun 24 14:55:03 2022 Page 1
ID:c3jyj23uDijq_8pvRKbkZpy75XW-_wsZM2We_ou46HDHAyEDCXLJyO?qVQISZ9Yr3qz32fs

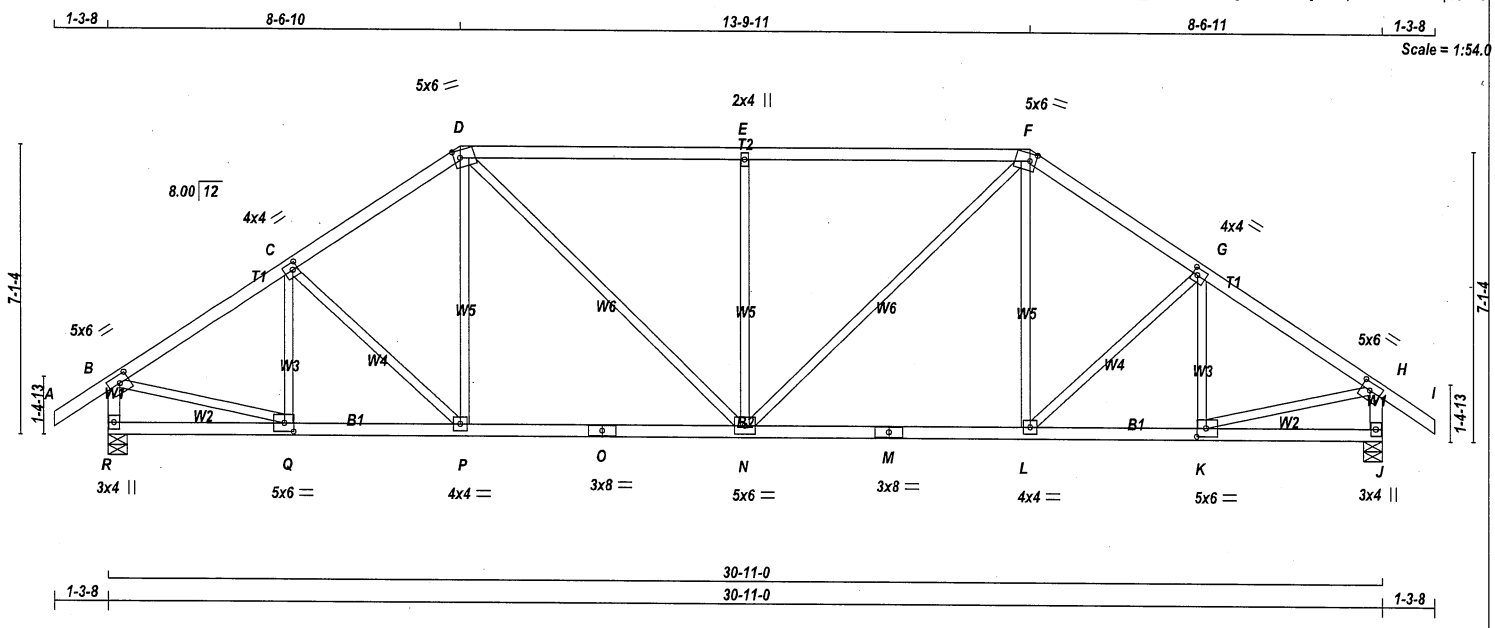

TOTAL WEIGHT = 2 X 133 = 267 lb

[M][F]

LUMBER

N. L. G. A. RULES

CHORDS	SIZE		LUMBER	DESCR.
A - D	2x4	DRY	No.2	SPF
D - F	2x4	DRY	No.2	SPF
F - I	2x4	DRY	No.2	SPF
R - B	2x4	DRY	No.2	SPF
J - H	2x4	DRY	No.2	SPF
R - O	2x4	DRY	No.2	SPF
O - M	2x4	DRY	No.2	SPF
M - J	2x4	DRY	No.2	SPF
ALL WEBS EXCEPT	2x3	DRY	No.2	SPF

DRY: SEASONED LUMBER.

PLATES (table is in inches)

JT	TYPE	PLATES	W	LEN	Y	X
B	TMVW-t	MT20	5.0	6.0	2.25	2.75
C	TMWW-t	MT20	4.0	4.0	2.00	1.50
D	TTWW-m	MT20	5.0	6.0	2.25	1.75
E	TMW+w	MT20	2.0	4.0		
F	TTWW-m	MT20	5.0	6.0	2.25	1.75
G	TMWW-t	MT20	4.0	4.0	2.00	1.50
H	TMVW-t	MT20	5.0	6.0	2.25	2.75
J	BMV1+p	MT20	3.0	4.0		
K	BMWW-t	MT20	5.0	6.0	2.50	2.75
L	BMWW-t	MT20	4.0	4.0		
M	BS-t	MT20	3.0	8.0		
N	BMWWW-t	MT20	5.0	6.0		
O	BS-t	MT20	3.0	8.0		
P	BMWW-t	MT20	4.0	4.0		
Q	BMWW-t	MT20	5.0	6.0	2.50	2.75
R	BMV1+p	MT20	3.0	4.0		

NOTES- (1)
1) Lateral braces to be a minimum of 2X4 SPF #2.

DIMENSIONS, SUPPORTS AND LOADINGS SPECIFIED BY FABRICATOR TO BE VERIFIED BY BUILDING DESIGNER

BEARINGS

JT	FACTORED GROSS REACTION VERT	HORZ	MAXIMUM FACTORED GROSS REACTION DOWN	HORZ	UPLIFT	INPUT BRG	REQRD BRG
R	2178	0	2178	0	0	5-8	5-8
J	2178	0	2178	0	0	5-8	5-8

UNFACTORED REACTIONS

JT	1ST LCASE COMBINED	MAX./MIN. COMPONENT REACTIONS SNOW	LIVE	PERM.LIVE	WIND	DEAD	SOIL
R	1524	1093 / 0	0 / 0	0 / 0	0 / 0	431 / 0	0 / 0
J	1524	1093 / 0	0 / 0	0 / 0	0 / 0	431 / 0	0 / 0

BEARING MATERIAL TO BE SPF NO.2 OR BETTER AT JOINT(S) R, J

BRACING

TOP CHORD TO BE SHEATHED OR MAX. PURLIN SPACING = 3.33 FT.
MAX. UNBRACED BOTTOM CHORD LENGTH = 10.00 FT OR RIGID CEILING DIRECTLY APPLIED.

ALL PITCH BREAKS AND PERIMETER CORNER JOINTS MUST BE LATERALLY RESTRAINED.

LOADING

TOTAL LOAD CASES: (4)

CHORDS

MEMB. FR-TO	MAX. FACTORED FORCE (LBS)	FACTORED VERT. LOAD LC1 (PLF) FROM	TO	MAX CSI (LC)	MAX. UNBRAC LENGTH
A- B	0 / 43	-112.4	-112.4	0.15 (1)	10.00
B- C	-2329 / 0	-112.4	-112.4	0.33 (1)	4.21
C- D	-2256 / 0	-112.4	-112.4	0.32 (1)	4.27
D- E	-2401 / 0	-112.4	-112.4	0.81 (1)	3.33
E- F	-2401 / 0	-112.4	-112.4	0.81 (1)	3.33
F- G	-2256 / 0	-112.4	-112.4	0.32 (1)	4.26
G- H	-2330 / 0	-112.4	-112.4	0.33 (1)	4.20
H- I	0 / 43	-112.4	-112.4	0.15 (1)	10.00
R- B	-2139 / 0	0.0	0.0	0.22 (1)	5.80
J- H	-2139 / 0	0.0	0.0	0.22 (1)	5.80
R- Q	0 / 0	-18.5	-18.5	0.08 (4)	10.00
Q- P	0 / 1962	-18.5	-18.5	0.39 (1)	10.00
P- O	0 / 1851	-18.5	-18.5	0.39 (1)	10.00
O- N	0 / 1851	-18.5	-18.5	0.39 (1)	10.00
N- M	0 / 1851	-18.5	-18.5	0.39 (1)	10.00
M- L	0 / 1851	-18.5	-18.5	0.39 (1)	10.00
L- K	0 / 1963	-18.5	-18.5	0.39 (1)	10.00
K- J	0 / 0	-18.5	-18.5	0.08 (4)	10.00

WEBS

MEMB. FR-TO	MAX. FACTORED FORCE (LBS)	MAX CSI (LC)
Q- C	-414 / 0	0.12 (1)
C- P	-157 / 0	0.09 (1)
P- D	0 / 220	0.05 (1)
D- N	0 / 773	0.17 (1)
N- E	-955 / 0	0.83 (1)
N- F	0 / 772	0.17 (1)
L- F	0 / 220	0.05 (1)
L- G	-158 / 0	0.09 (1)
K- G	-414 / 0	0.12 (1)
B- Q	0 / 2021	0.45 (1)
K- H	0 / 2022	0.46 (1)

DESIGN CRITERIA

SPECIFIED LOADS:

TOP CH.	LL	=	32.5	PSF
	DL	=	6.0	PSF
BOT CH.	LL	=	0.0	PSF
	DL	=	7.4	PSF
TOTAL LOAD		=	45.9	PSF

SPACING = 24.0 IN. C/C

LOADING IN FLAT SECTION BASED ON A SLOPE OF 6.00/12

THIS TRUSS IS DESIGNED FOR RESIDENTIAL OR SMALL BUILDING REQUIREMENTS OF PART 9, NBCC 2015

THIS DESIGN COMPLIES WITH:
- PART 9 OF BCBC 2018 , ABC 2019
- PART 9 OF OBC 2012 (2019 AMENDMENT)
- CSA 086-14
- TPIC 2014

(55 % OF 43.9 P.S.F. G.S.L. PLUS 8.4 P.S.F. RAIN LOAD) EQUALS 32.5 P.S.F. SPECIFIED ROOF LIVE LOAD

ALLOWABLE DEFL.(LL)= L/360 (1.03")
CALCULATED VERT. DEFL.(LL) = L/ 999 (0.11")
ALLOWABLE DEFL.(TL)= L/360 (1.03")
CALCULATED VERT. DEFL.(TL) = L/ 999 (0.20")

CSI: TC=0.81/1.00 (D-E:1) , BC=0.39/1.00 (K-L:1) , WB=0.83/1.00 (E-N:1) , SSI=0.38/1.00 (D-E:1)

DOL LUMBER=1.00 NAIL=1.00 LS BEND=1.10 COMP=1.10 SHEAR=1.10 TENS= 1.10

COMPANION LIVE LOAD FACTOR = 1.00

TRUSS PLATE MANUFACTURER IS NOT RESPONSIBLE FOR QUALITY CONTROL IN THE TRUSS MANUFACTURING PLANT .

NAIL VALUES

PLATE	GRIP(DRY) (PSI) MAX	MIN	SHEAR (PLI) MAX	MIN	SECTION (PLI) MAX	MIN
MT20	650	371	1747	788	1987	1873

PLATE PLACEMENT TOL. = 0.250 inches

PLATE ROTATION TOL. = 5.0 Deg.

JSI GRIP= 0.87 (Q) (INPUT = 0.90)
JSI METAL= 0.64 (O) (INPUT = 1.00)

LICENSED PROFESSIONAL ENGINEER
06-24-22
H. J. G. ALVES
100009024
PROVINCE OF ONTARIO

Structural component only
DWG# T-2215320

REVIEWED

JOB NAME	TRUSS NAME	QUANTITY	PLY	JOB DESC.	DRWG NO.
423616	T34	2	1	BAYVIEW WELLINGTON TRUSS DESC.	

Tamarack Roof Truss, Burlington

Version 8.530 S Feb 23 2022 MiTek Industries, Inc. Fri Jun 24 14:55:04 2022 Page 1
ID:c3jyj23uDijq_8pvRKbkZpy75XW-S6QxaOXGk50xjQoTkglSlluZxnMHEsvbopIPbGz32fr

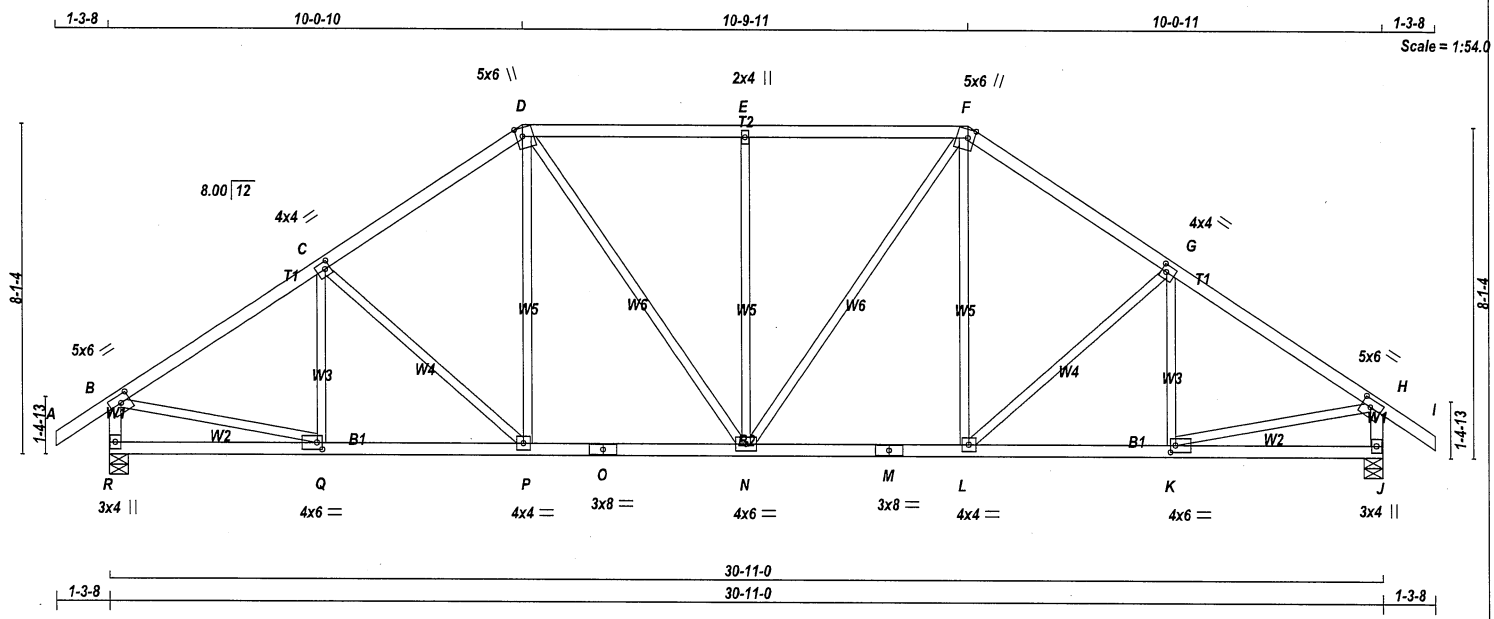

TOTAL WEIGHT = 2 X 140 = 279 lb

LUMBER
N. L. G. A. RULES

CHORDS	SIZE		LUMBER	DESCR.
A - D	2x4	DRY	No.2	SPF
D - F	2x4	DRY	No.2	SPF
F - I	2x4	DRY	No.2	SPF
R - B	2x4	DRY	No.2	SPF
J - H	2x4	DRY	No.2	SPF
R - O	2x4	DRY	No.2	SPF
O - M	2x4	DRY	No.2	SPF
M - J	2x4	DRY	No.2	SPF
ALL WEBS EXCEPT	2x3	DRY	No.2	SPF

DRY: SEASONED LUMBER.

PLATES (table is in inches)

JT	TYPE	PLATES	W	LEN	Y	X
B	TMVW-t	MT20	5.0	6.0	2.25	2.75
C	TMWW-t	MT20	4.0	4.0	2.00	1.50
D	TTWW+m	MT20	5.0	6.0	Edge	1.75
E	TMW+w	MT20	2.0	4.0		
F	TTWW+m	MT20	5.0	6.0	Edge	1.75
G	TMWW-t	MT20	4.0	4.0	2.00	1.50
H	TMVW-t	MT20	5.0	6.0	2.25	2.75
J	BMV1+p	MT20	3.0	4.0		
K	BMWW-t	MT20	4.0	6.0	2.00	1.50
L	BMWW-t	MT20	4.0	4.0		
M	BS-t	MT20	3.0	8.0		
N	BMWWW-t	MT20	4.0	6.0		
O	BS-t	MT20	3.0	8.0		
P	BMWW-t	MT20	4.0	4.0		
Q	BMWW-t	MT20	4.0	6.0	2.00	1.50
R	BMV1+p	MT20	3.0	4.0		

Edge - INDICATES REFERENCE CORNER OF PLATE TOUCHES EDGE OF CHORD.

NOTES- (1)
1) Lateral braces to be a minimum of 2X4 SPF #2.

Structural component only
DWG# T-2215321

DIMENSIONS, SUPPORTS AND LOADINGS SPECIFIED BY FABRICATOR TO BE VERIFIED BY BUILDING DESIGNER

BEARINGS

JT	FACTORED GROSS REACTION VERT	HORZ	MAXIMUM FACTORED GROSS REACTION DOWN	HORZ	UPLIFT	INPUT BRG IN-SX	REQRD BRG IN-SX
R	2178	0	2178	0	0	5-8	5-8
J	2178	0	2178	0	0	5-8	5-8

UNFACTORED REACTIONS

JT	1ST LCASE COMBINED	MAX./MIN. COMPONENT REACTIONS SNOW	LIVE	PERM.LIVE	WIND	DEAD	SOIL
R	1524	1093 / 0	0 / 0	0 / 0	0 / 0	431 / 0	0 / 0
J	1524	1093 / 0	0 / 0	0 / 0	0 / 0	431 / 0	0 / 0

BEARING MATERIAL TO BE SPF NO.2 OR BETTER AT JOINT(S) R, J

BRACING
TOP CHORD TO BE SHEATHED OR MAX. PURLIN SPACING = 4.02 FT.
MAX. UNBRACED BOTTOM CHORD LENGTH = 10.00 FT OR RIGID CEILING DIRECTLY APPLIED.

ALL PITCH BREAKS AND PERIMETER CORNER JOINTS MUST BE LATERALLY RESTRAINED.

LOADING
TOTAL LOAD CASES: (4)

CHORDS

MEMB. FR-TO	MAX. FACTORED FORCE (LBS)	FACTORED VERT. LOAD LC1 (PLF) FROM	TO	MAX CSI (LC)	MAX. UNBRAC LENGTH
A- B	0 / 43	-112.4	-112.4	0.15 (1)	10.00
B- C	-2373 / 0	-112.4	-112.4	0.45 (1)	4.03
C- D	-2159 / 0	-112.4	-112.4	0.43 (1)	4.21
D- E	-2057 / 0	-112.4	-112.4	0.48 (1)	4.21
E- F	-2057 / 0	-112.4	-112.4	0.48 (1)	4.21
F- G	-2159 / 0	-112.4	-112.4	0.43 (1)	4.21
G- H	-2374 / 0	-112.4	-112.4	0.46 (1)	4.02
H- I	0 / 43	-112.4	-112.4	0.15 (1)	10.00
R- B	-2136 / 0	0.0	0.0	0.22 (1)	5.80
J- H	-2136 / 0	0.0	0.0	0.22 (1)	5.80
R- Q	0 / 0	-18.5	-18.5	0.10 (4)	10.00
Q- P	0 / 2005	-18.5	-18.5	0.38 (1)	10.00
P- O	0 / 1767	-18.5	-18.5	0.34 (1)	10.00
O- N	0 / 1767	-18.5	-18.5	0.34 (1)	10.00
N- M	0 / 1767	-18.5	-18.5	0.34 (1)	10.00
M- L	0 / 1767	-18.5	-18.5	0.34 (1)	10.00
L- K	0 / 2005	-18.5	-18.5	0.38 (1)	10.00
K- J	0 / 0	-18.5	-18.5	0.10 (4)	10.00

WEBS

MEMB. FR-TO	MAX. FACTORED FORCE (LBS)	MAX CSI (LC)
Q- C	-326 / 0	0.11 (1)
C- P	-325 / 0	0.27 (1)
P- D	0 / 316	0.07 (1)
D- N	0 / 510	0.11 (1)
N- E	-742 / 0	0.94 (1)
N- F	0 / 510	0.11 (1)
L- F	0 / 316	0.07 (1)
L- G	-326 / 0	0.27 (1)
K- G	-325 / 0	0.11 (1)
B- Q	0 / 2049	0.46 (1)
K- H	0 / 2049	0.46 (1)

[M][F]

DESIGN CRITERIA

SPECIFIED LOADS:

TOP CH.	LL	=	32.5	PSF
	DL	=	6.0	PSF
BOT CH.	LL	=	0.0	PSF
	DL	=	7.4	PSF
TOTAL LOAD		=	45.9	PSF

SPACING = 24.0 IN. C/C

LOADING IN FLAT SECTION BASED ON A SLOPE OF 6.00/12

THIS TRUSS IS DESIGNED FOR RESIDENTIAL OR SMALL BUILDING REQUIREMENTS OF PART 9, NBCC 2015

THIS DESIGN COMPLIES WITH:
- PART 9 OF BCBC 2018 , ABC 2019
- PART 9 OF OBC 2012 (2019 AMENDMENT)
- CSA 086-14
- TPIC 2014

(55 % OF 43.9 P.S.F. G.S.L. PLUS 8.4 P.S.F. RAIN LOAD) EQUALS 32.5 P.S.F. SPECIFIED ROOF LIVE LOAD

ALLOWABLE DEFL.(LL)= L/360 (1.03")
CALCULATED VERT. DEFL.(LL) = L/ 999 (0.09")
ALLOWABLE DEFL.(TL)= L/360 (1.03")
CALCULATED VERT. DEFL.(TL) = L/ 999 (0.17")

CSI: TC=0.48/1.00 (D-E:1) , BC=0.38/1.00 (K-L:1) , WB=0.94/1.00 (E-N:1) , SSI=0.29/1.00 (E-F:1)

DOL LUMBER=1.00 NAIL=1.00 LS BEND=1.10 COMP=1.10 SHEAR=1.10 TENS= 1.10

COMPANION LIVE LOAD FACTOR = 1.00

TRUSS PLATE MANUFACTURER IS NOT RESPONSIBLE FOR QUALITY CONTROL IN THE TRUSS MANUFACTURING PLANT .

NAIL VALUES

PLATE	GRIP(DRY) (PSI) MAX	MIN	SHEAR (PLI) MAX	MIN	SECTION (PLI) MAX	MIN
MT20	650	371	1747	788	1987	1873

PLATE PLACEMENT TOL. = 0.250 inches

PLATE ROTATION TOL. = 5.0 Deg.

JSI GRIP= 0.89 (Q) (INPUT = 0.90)
JSI METAL= 0.60 (H) (INPUT = 1.00)

REVIEWED

JOB NAME	TRUSS NAME	QUANTITY	PLY	JOB DESC.	DRWG NO.
423616	T35	2	1	BAYVIEW WELLINGTON TRUSS DESC.	

Tamarack Roof Truss, Burlington

Version 8.530 S Feb 23 2022 MiTek Industries, Inc. Fri Jun 24 14:55:05 2022 Page 1
ID:c3jyj23uDijq_8pvRKbkZpy75XW-wJ_JnkYuVP8nLaNgINGhHyRiXBhlzP9l1S1y7iz32fq

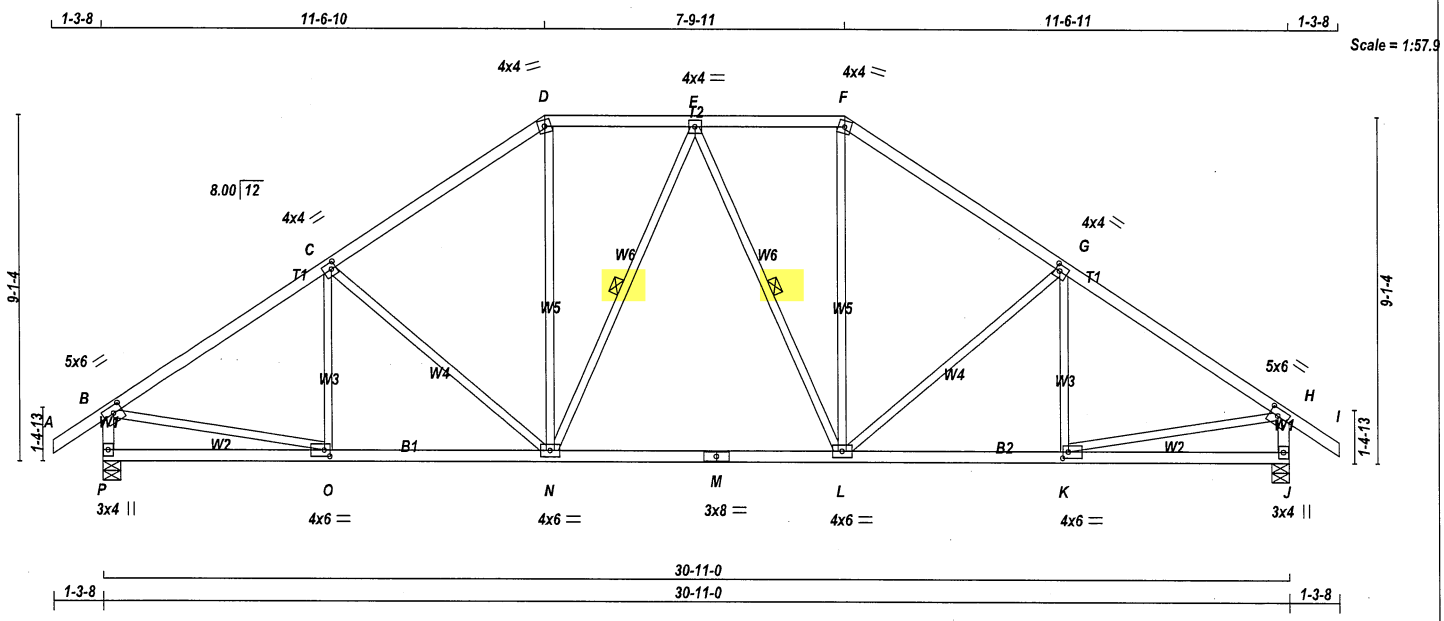

TOTAL WEIGHT = 2 X 140 = 279 lb

LUMBER
N. L. G. A. RULES

CHORDS	SIZE		LUMBER	DESCR.
A - D	2x4	DRY	No.2	SPF
D - F	2x4	DRY	No.2	SPF
F - I	2x4	DRY	No.2	SPF
P - B	2x4	DRY	No.2	SPF
J - H	2x4	DRY	No.2	SPF
P - M	2x4	DRY	No.2	SPF
M - J	2x4	DRY	No.2	SPF
ALL WEBS EXCEPT	2x3	DRY	No.2	SPF

DRY: SEASONED LUMBER.

PLATES (table is in inches)

JT	TYPE	PLATES	W	LEN	Y	X
B	TMVW-t	MT20	5.0	6.0	2.25	2.75
C	TMWW-t	MT20	4.0	4.0	2.00	1.50
D	TTW-m	MT20	4.0	4.0		
E	TMWW-t	MT20	4.0	4.0		
F	TTW-m	MT20	4.0	4.0		
G	TMWW-t	MT20	4.0	4.0	2.00	1.50
H	TMVW-t	MT20	5.0	6.0	2.25	2.75
J	BMV1+p	MT20	3.0	4.0		
K	BMWW-t	MT20	4.0	6.0	2.00	1.75
L	BMWWW-t	MT20	4.0	6.0		
M	BS-t	MT20	3.0	8.0		
N	BMWWW-t	MT20	4.0	6.0		
O	BMWW-t	MT20	4.0	6.0	2.00	1.75
P	BMV1+p	MT20	3.0	4.0		

NOTES- (1)
1) Lateral braces to be a minimum of 2X4 SPF #2.

DIMENSIONS, SUPPORTS AND LOADINGS SPECIFIED BY FABRICATOR TO BE VERIFIED BY BUILDING DESIGNER

BEARINGS

JT	FACTORED GROSS REACTION VERT	HORZ	MAXIMUM FACTORED GROSS REACTION DOWN	HORZ	UPLIFT	INPUT BRG IN-SX	REQRD BRG IN-SX
P	2178	0	2178	0	0	5-8	5-8
J	2178	0	2178	0	0	5-8	5-8

UNFACTORED REACTIONS

JT	1ST LCASE COMBINED	MAX./MIN. COMPONENT REACTIONS SNOW	LIVE	PERM.LIVE	WIND	DEAD	SOIL
P	1524	1093 / 0	0 / 0	0 / 0	0 / 0	431 / 0	0 / 0
J	1524	1093 / 0	0 / 0	0 / 0	0 / 0	431 / 0	0 / 0

BEARING MATERIAL TO BE SPF NO.2 OR BETTER AT JOINT(S) P, J

BRACING
TOP CHORD TO BE SHEATHED OR MAX. PURLIN SPACING = 3.81 FT.
MAX. UNBRACED BOTTOM CHORD LENGTH = 10.00 FT OR RIGID CEILING DIRECTLY APPLIED.

ALL PITCH BREAKS AND PERIMETER CORNER JOINTS MUST BE LATERALLY RESTRAINED.

1 LATERAL BRACE(S) AT 1/ 2 LENGTH OF E-N, E-L.

END VERTICAL(S) MUST BE SHEATHED OR HAVE BRACES AS INDICATED IN THE MAX. UNBRACED LENGTH COLUMN OF THE TABLE BELOW

LOADING
TOTAL LOAD CASES: (4)

CHORDS

MEMB. FR-TO	MAX. FACTORED FORCE (LBS)	FACTORED VERT. LOAD (PLF) FROM	TO	LC1 MAX CSI (LC)	MAX. UNBRAC LENGTH
A- B	0 / 43	-112.4	-112.4	0.15 (1)	10.00
B- C	-2391 / 0	-112.4	-112.4	0.61 (1)	3.81
C- D	-2052 / 0	-112.4	-112.4	0.56 (1)	4.11
D- E	-1677 / 0	-112.4	-112.4	0.23 (1)	4.90
E- F	-1677 / 0	-112.4	-112.4	0.23 (1)	4.90
F- G	-2052 / 0	-112.4	-112.4	0.56 (1)	4.11
G- H	-2392 / 0	-112.4	-112.4	0.61 (1)	3.81
H- I	0 / 43	-112.4	-112.4	0.15 (1)	10.00
P- B	-2131 / 0	0.0	0.0	0.22 (1)	5.81
J- H	-2131 / 0	0.0	0.0	0.22 (1)	5.81
P- O	0 / 0	-18.5	-18.5	0.13 (4)	10.00
O- N	0 / 2025	-18.5	-18.5	0.43 (1)	10.00
N- M	0 / 1790	-18.5	-18.5	0.39 (1)	10.00
M- L	0 / 1790	-18.5	-18.5	0.39 (1)	10.00
L- K	0 / 2026	-18.5	-18.5	0.43 (1)	10.00
K- J	0 / 0	-18.5	-18.5	0.13 (4)	10.00

WEBS

MEMB. FR-TO	MAX. FACTORED FORCE (LBS)	MAX CSI (LC)
O- C	-264 / 21	0.11 (1)
C- N	-471 / 0	0.56 (1)
N- D	0 / 701	0.16 (1)
N- E	-286 / 0	0.19 (1)
E- L	-286 / 0	0.19 (1)
L- F	0 / 701	0.16 (1)
L- G	-472 / 0	0.56 (1)
K- G	-263 / 21	0.11 (1)
B- O	0 / 2059	0.46 (1)
K- H	0 / 2059	0.46 (1)

DESIGN CRITERIA [M][F]

SPECIFIED LOADS:

TOP CH.	LL	=	32.5	PSF
	DL	=	6.0	PSF
BOT CH.	LL	=	0.0	PSF
	DL	=	7.4	PSF
TOTAL LOAD		=	45.9	PSF

SPACING = 24.0 IN. C/C

LOADING IN FLAT SECTION BASED ON A SLOPE OF 6.00/12

THIS TRUSS IS DESIGNED FOR RESIDENTIAL OR SMALL BUILDING REQUIREMENTS OF PART 9, NBCC 2015

THIS DESIGN COMPLIES WITH:
- PART 9 OF BCBC 2018 , ABC 2019
- PART 9 OF OBC 2012 (2019 AMENDMENT)
- CSA 086-14
- TPIC 2014

(55 % OF 43.9 P.S.F. G.S.L. PLUS 8.4 P.S.F. RAIN LOAD) EQUALS 32.5 P.S.F. SPECIFIED ROOF LIVE LOAD

ALLOWABLE DEFL.(LL)= L/360 (1.03")
CALCULATED VERT. DEFL.(LL) = L/ 999 (0.09")
ALLOWABLE DEFL.(TL)= L/360 (1.03")
CALCULATED VERT. DEFL.(TL) = L/ 999 (0.21")

CSI: TC=0.61/1.00 (G-H:1) , BC=0.43/1.00 (K-L:1) , WB=0.56/1.00 (G-L:1) , SSI=0.26/1.00 (G-H:1)

DOL LUMBER=1.00 NAIL=1.00 LS BEND=1.10 COMP=1.10 SHEAR=1.10 TENS= 1.10

COMPANION LIVE LOAD FACTOR = 1.00

TRUSS PLATE MANUFACTURER IS NOT RESPONSIBLE FOR QUALITY CONTROL IN THE TRUSS MANUFACTURING PLANT .

NAIL VALUES

PLATE	GRIP(DRY) (PSI) MAX	MIN	SHEAR (PLI) MAX	MIN	SECTION (PLI) MAX	MIN
MT20	650	371	1747	788	1987	1873

PLATE PLACEMENT TOL. = 0.250 inches

PLATE ROTATION TOL. = 5.0 Deg.

JSI GRIP= 0.89 (O) (INPUT = 0.90)
JSI METAL= 0.65 (M) (INPUT = 1.00)

LICENSED PROFESSIONAL ENGINEER
06-24-22
H. J. G. ALVES
100009024
PROVINCE OF ONTARIO

Structural component only
DWG# T-2215322

REVIEWED

JOB NAME	TRUSS NAME	QUANTITY	PLY	JOB DESC.	DRWG NO.
423616	T36	2	1	BAYVIEW WELLINGTON TRUSS DESC.	

Tamarack Roof Truss, Burlington

Version 8.530 S Feb 23 2022 MiTek Industries, Inc. Fri Jun 24 14:55:06 2022 Page 1
ID:c3jyj23uDijq_8pvRKbkZpy75XW-OVYh?4ZWGjGezkyss5owqAzr?b1BitpuG6nWg9z32fp

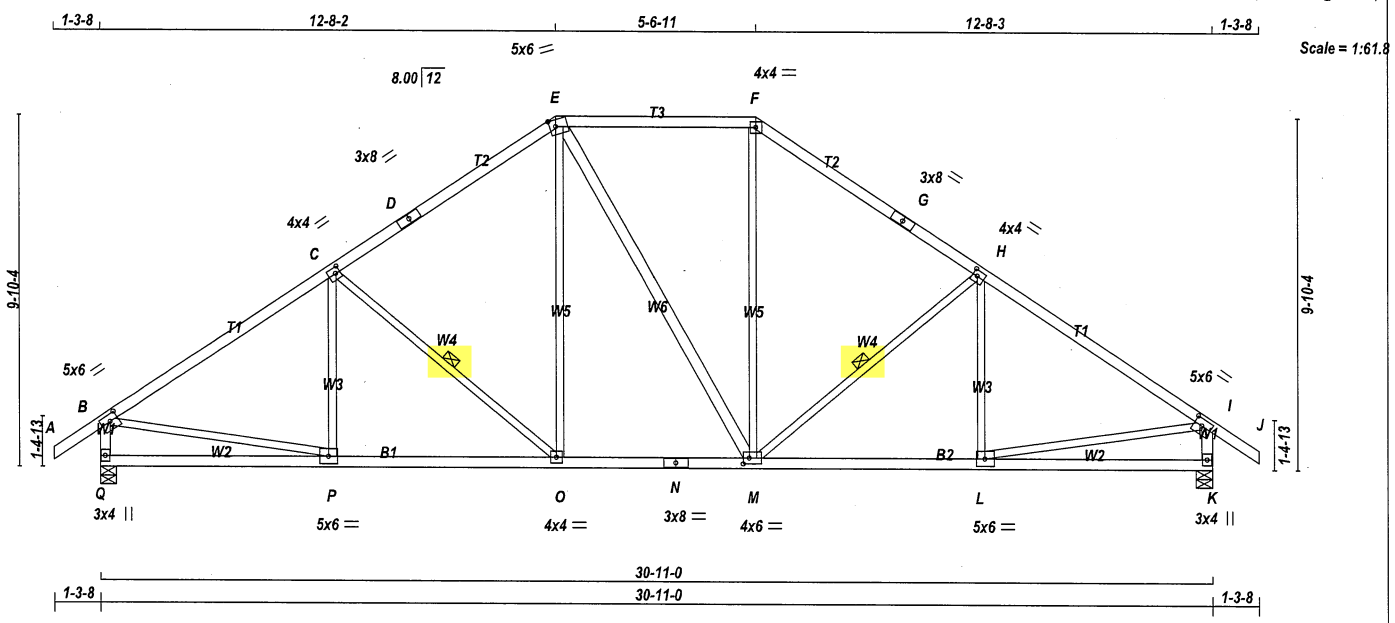

TOTAL WEIGHT = 2 X 141 = 282 lb

LUMBER
N. L. G. A. RULES

CHORDS	SIZE		LUMBER	DESCR.
A - D	2x4	DRY	No.2	SPF
D - E	2x4	DRY	No.2	SPF
E - F	2x4	DRY	No.2	SPF
F - G	2x4	DRY	No.2	SPF
G - J	2x4	DRY	No.2	SPF
Q - B	2x4	DRY	No.2	SPF
K - I	2x4	DRY	No.2	SPF
Q - N	2x4	DRY	No.2	SPF
N - K	2x4	DRY	No.2	SPF
ALL WEBS	2x3	DRY	No.2	SPF
EXCEPT				
E - M	2x4	DRY	No.2	SPF

DRY: SEASONED LUMBER.

PLATES (table is in inches)

JT	TYPE	PLATES	W	LEN	Y	X
B	TMVW-t	MT20	5.0	6.0	2.25	2.75
C	TMWW-t	MT20	4.0	4.0	2.00	1.50
D	TS-t	MT20	3.0	8.0		
E	TTWW-m	MT20	5.0	6.0	2.25	2.00
F	TTW-I	MT20	4.0	4.0		
G	TS-t	MT20	3.0	8.0		
H	TMWW-t	MT20	4.0	4.0	2.00	1.50
I	TMVW-t	MT20	5.0	6.0	2.25	2.75
K	BMV1+p	MT20	3.0	4.0		
L	BMWW-t	MT20	5.0	6.0		
M	BMWWW-t	MT20	4.0	6.0	2.00	2.00
N	BS-t	MT20	3.0	8.0		
O	BMWW-t	MT20	4.0	4.0		
P	BMWW-t	MT20	5.0	6.0		
Q	BMV1+p	MT20	3.0	4.0		

NOTES- (1)
1) Lateral braces to be a minimum of 2X4 SPF #2.

DIMENSIONS, SUPPORTS AND LOADINGS SPECIFIED BY FABRICATOR TO BE VERIFIED BY BUILDING DESIGNER

BEARINGS

JT	FACTORED GROSS REACTION VERT	HORZ	MAXIMUM FACTORED GROSS REACTION DOWN	HORZ	UPLIFT	INPUT BRG IN-SX	REQRD BRG IN-SX
Q	2178	0	2178	0	0	5-8	5-8
K	2178	0	2178	0	0	5-8	5-8

UNFACTORED REACTIONS

JT	1ST LCASE COMBINED	MAX./MIN. COMPONENT REACTIONS SNOW	LIVE	PERM.LIVE	WIND	DEAD	SOIL
Q	1524	1093 / 0	0 / 0	0 / 0	0 / 0	431 / 0	0 / 0
K	1524	1093 / 0	0 / 0	0 / 0	0 / 0	431 / 0	0 / 0

BEARING MATERIAL TO BE SPF NO.2 OR BETTER AT JOINT(S) Q, K

BRACING
TOP CHORD TO BE SHEATHED OR MAX. PURLIN SPACING = 3.58 FT.
MAX. UNBRACED BOTTOM CHORD LENGTH = 10.00 FT OR RIGID CEILING DIRECTLY APPLIED.

ALL PITCH BREAKS AND PERIMETER CORNER JOINTS MUST BE LATERALLY RESTRAINED.

1 LATERAL BRACE(S) AT 1/ 2 LENGTH OF C-O, H-M.

END VERTICAL(S) MUST BE SHEATHED OR HAVE BRACES AS INDICATED IN THE MAX. UNBRACED LENGTH COLUMN OF THE TABLE BELOW

LOADING
TOTAL LOAD CASES: (4)

CHORDS

MEMB. FR-TO	MAX. FACTORED FORCE (LBS)	FACTORED VERT. LOAD (PLF) FROM	TO	LC1	MAX CSI (LC)	MAX. UNBRAC LENGTH
A- B	0 / 43	-112.4	-112.4	0.15 (1)	10.00	
B- C	-2397 / 0	-112.4	-112.4	0.76 (1)	3.58	
C- D	-1956 / 0	-112.4	-112.4	0.68 (1)	3.99	
D- E	-1956 / 0	-112.4	-112.4	0.68 (1)	3.99	
E- F	-1591 / 0	-112.4	-112.4	0.48 (1)	4.65	
F- G	-1957 / 0	-112.4	-112.4	0.68 (1)	3.99	
G- H	-1957 / 0	-112.4	-112.4	0.68 (1)	3.99	
H- I	-2398 / 0	-112.4	-112.4	0.76 (1)	3.58	
I- J	0 / 43	-112.4	-112.4	0.15 (1)	10.00	
Q- B	-2129 / 0	0.0	0.0	0.22 (1)	5.81	
K- I	-2128 / 0	0.0	0.0	0.22 (1)	5.81	
Q- P	0 / 0	-18.5	-18.5	0.18 (4)	10.00	
P- O	0 / 2034	-18.5	-18.5	0.41 (1)	10.00	
O- N	0 / 1591	-18.5	-18.5	0.33 (1)	10.00	
N- M	0 / 1591	-18.5	-18.5	0.33 (1)	10.00	
M- L	0 / 2035	-18.5	-18.5	0.41 (1)	10.00	
L- K	0 / 0	-18.5	-18.5	0.18 (4)	10.00	

WEBS

MEMB. FR-TO	MAX. FACTORED FORCE (LBS)	MAX CSI (LC)
P- C	-210 / 54	0.10 (1)
C- O	-589 / 0	0.28 (1)
O- E	0 / 485	0.11 (1)
E- M	0 / 2	0.00 (1)
M- F	0 / 486	0.11 (1)
M- H	-588 / 0	0.28 (1)
L- H	-211 / 53	0.10 (1)
B- P	0 / 2063	0.46 (1)
L- I	0 / 2063	0.46 (1)

DESIGN CRITERIA

SPECIFIED LOADS:

TOP CH.	LL	=	32.5	PSF
	DL	=	6.0	PSF
BOT CH.	LL	=	0.0	PSF
	DL	=	7.4	PSF
TOTAL LOAD		=	45.9	PSF

SPACING = 24.0 IN. C/C

LOADING IN FLAT SECTION BASED ON A SLOPE OF 6.00/12

THIS TRUSS IS DESIGNED FOR RESIDENTIAL OR SMALL BUILDING REQUIREMENTS OF PART 9, NBCC 2015

THIS DESIGN COMPLIES WITH:
- PART 9 OF BCBC 2018 , ABC 2019
- PART 9 OF OBC 2012 (2019 AMENDMENT)
- CSA 086-14
- TPIC 2014

(55 % OF 43.9 P.S.F. G.S.L. PLUS 8.4 P.S.F. RAIN LOAD) EQUALS 32.5 P.S.F. SPECIFIED ROOF LIVE LOAD

ALLOWABLE DEFL.(LL)= L/360 (1.03")
CALCULATED VERT. DEFL.(LL) = L/ 999 (0.09")
ALLOWABLE DEFL.(TL)= L/360 (1.03")
CALCULATED VERT. DEFL.(TL) = L/ 999 (0.17")

CSI: TC=0.76/1.00 (H-I:1) , BC=0.41/1.00 (O-P:1) , WB=0.46/1.00 (I-L:1) , SSI=0.29/1.00 (H-I:1)

DOL LUMBER=1.00 NAIL=1.00 LS BEND=1.10 COMP=1.10 SHEAR=1.10 TENS= 1.10

COMPANION LIVE LOAD FACTOR = 1.00

TRUSS PLATE MANUFACTURER IS NOT RESPONSIBLE FOR QUALITY CONTROL IN THE TRUSS MANUFACTURING PLANT .

NAIL VALUES

PLATE	GRIP(DRY) (PSI) MAX	MIN	SHEAR (PLI) MAX	MIN	SECTION (PLI) MAX	MIN
MT20	650	371	1747	788	1987	1873

PLATE PLACEMENT TOL. = 0.250 inches

PLATE ROTATION TOL. = 5.0 Deg.

JSI GRIP= 0.90 (P) (INPUT = 0.90)
JSI METAL= 0.61 (I) (INPUT = 1.00)

LICENSED PROFESSIONAL ENGINEER
06-24-22
H. J. G. ALVES
100009024
PROVINCE OF ONTARIO

Structural component only
DWG# T-2215323

REVIEWED

JOB NAME	TRUSS NAME	QUANTITY	PLY	JOB DESC.	DRWG NO.
423616	T37	1	2	BAYVIEW WELLINGTON TRUSS DESC.	

Tamarack Roof Truss, Burlington

Version 8.530 S Feb 23 2022 MiTek Industries, Inc. Fri Jun 24 14:55:07 2022 Page 1
ID:c3jyj23uDijq_8pvRKbkZpy75XW-sh64CQa910OVauX2PoJ9NNW2F?PFRLI2UmW3Cbz32fo

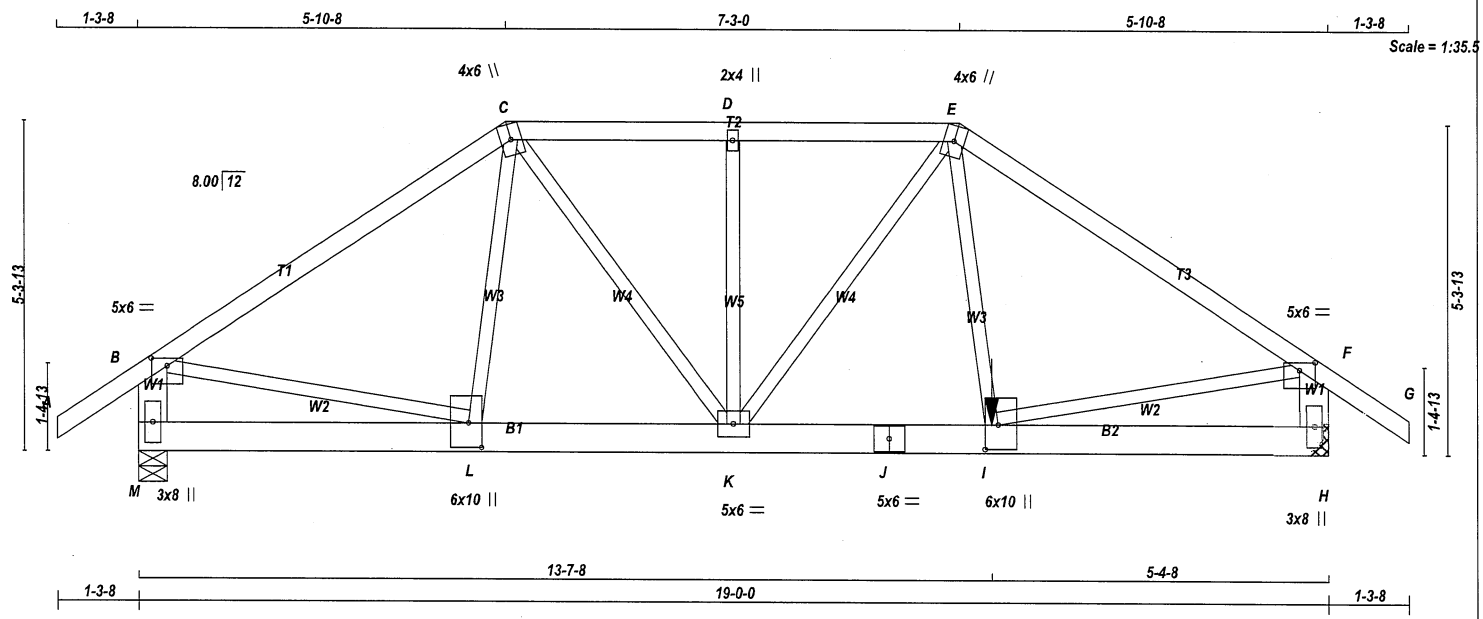

TOTAL WEIGHT = 2 X 94 = 188 lb

[M]

LUMBER

N. L. G. A. RULES

CHORDS	SIZE		LUMBER	DESCR.
A - C	2x4	DRY	No.2	SPF
C - E	2x4	DRY	No.2	SPF
E - G	2x4	DRY	No.2	SPF
M - B	2x6	DRY	No.2	SPF
H - F	2x6	DRY	No.2	SPF
M - J	2x6	DRY	No.2	SPF
J - H	2x6	DRY	No.2	SPF
ALL WEBS EXCEPT	2x3	DRY	No.2	SPF

DRY: SEASONED LUMBER.

DESIGN CONSISTS OF 2 TRUSSES BUILT SEPARATELY THEN FASTENED TOGETHER AS FOLLOWS:

CHORDS	#ROWS	SURFACE SPACING (IN)	LOAD(PLF)
TOP CHORDS : (0.122"X3") SPIRAL NAILS			
A- C	1	12	TOP
C- E	1	12	TOP
E- G	1	12	TOP
M- B	2	12	TOP
H- F	2	12	TOP
BOTTOM CHORDS : (0.122"X3") SPIRAL NAILS			
M- J	2	12	TOP
J- H	2	12	SIDE(183.1)
WEBS : (0.122"X3") SPIRAL NAILS			
I- E	1	6	SIDE(461.0)
2x3	1	6	

NAILS TO BE DRIVEN FROM ONE SIDE ONLY.

GIRDER NAILING ASSUMES NAILED HANGERS ARE FASTENED WITH MIN. 3-0 INCH NAILS.

TOP - COMPONENTS ARE LOADED FROM THE TOP AND MUST BE PLACED ON TOP EDGE OF ALL PLIES FOR THE LOAD TO BE TRANSFERRED TO EACH PLY.

LICENSED PROFESSIONAL ENGINEER
06-24-22
H. J. G. ALVES
100009024
PROVINCE OF ONTARIO

Structural component only
DWG# T-2215324

DIMENSIONS, SUPPORTS AND LOADINGS SPECIFIED BY FABRICATOR TO BE VERIFIED BY BUILDING DESIGNER

BEARINGS

JT	FACTORED GROSS REACTION VERT	HORZ	MAXIMUM FACTORED GROSS REACTION DOWN	HORZ	UPLIFT	INPUT BRG IN-SX	REQRD BRG IN-SX
M	2097	0	2097	0	0	5-8	5-8
H	3169	0	3169	0	0	MECHANICAL	

A SUITABLE HANGER/MECHANICAL CONNECTION IS REQUIRED AT JOINT H. MINIMUM BEARING LENGTH AT JOINT H = 4-0.

UNFACTORED REACTIONS

JT	1ST LCASE COMBINED	MAX./MIN. COMPONENT REACTIONS SNOW	LIVE	PERM.LIVE	WIND	DEAD	SOIL
M	1464	1067 / 0	0 / 0	0 / 0	0 / 0	396 / 0	0 / 0
H	2211	1622 / 0	0 / 0	0 / 0	0 / 0	589 / 0	0 / 0

BEARING MATERIAL TO BE SPF NO.2 OR BETTER AT JOINT(S) M

BRACING

TOP CHORD TO BE SHEATHED OR MAX. PURLIN SPACING = 4.38 FT.
MAX. UNBRACED BOTTOM CHORD LENGTH = 10.00 FT OR RIGID CEILING DIRECTLY APPLIED.

ALL PITCH BREAKS AND PERIMETER CORNER JOINTS MUST BE LATERALLY RESTRAINED.

LOADING

TOTAL LOAD CASES: (4)

CHORDS

MEMB. FR-TO	MAX. FACTORED FORCE (LBS)	FACTORED VERT. LOAD (PLF) FROM	TO	LC1	MAX CSI (LC)	MAX. UNBRAC LENGTH
A- B	0 / 43	-112.4	-112.4	0.08 (1)	10.00	
B- C	-2201 / 0	-112.4	-112.4	0.44 (1)	5.44	
C- D	-2577 / 0	-112.4	-112.4	0.14 (1)	5.51	
D- E	-2577 / 0	-112.4	-112.4	0.14 (1)	5.51	
E- F	-3678 / 0	-112.4	-112.4	0.54 (1)	4.38	
F- G	0 / 43	-112.4	-112.4	0.08 (1)	10.00	
M- B	-2048 / 0	0.0	0.0	0.07 (1)	7.81	
H- F	-3095 / 0	0.0	0.0	0.11 (1)	7.81	
M- L	0 / 0	-18.5	-18.5	0.03 (4)	10.00	
L- K	0 / 1860	-18.5	-18.5	0.13 (1)	10.00	
K- J	0 / 2849	-18.5	-18.5	0.23 (1)	10.00	
J- I	0 / 2849	-18.5	-18.5	0.23 (1)	10.00	
I- H	0 / 0	-18.5	-18.5	0.05 (1)	10.00	

WEBS

MEMB. FR-TO	MAX. FACTORED FORCE (LBS)	MAX CSI (LC)
C- K	0 / 1222	0.15 (1)
K- D	-490 / 0	0.10 (1)
K- E	-463 / 0	0.15 (1)
L- C	-260 / 16	0.05 (1)
E- I	0 / 1936	0.24 (1)
I- F	0 / 3113	0.39 (1)
B- L	0 / 1863	0.23 (1)

SPECIFIED CONCENTRATED LOADS (LBS)

JT	LOC.	LC1	MAX-	MAX+	FACE	DIR.	TYPE	HEEL	CONN.
I	13-7-8	-1720	-1720	---	BACK	VERT	TOTAL	---	C1

CONNECTION REQUIREMENTS

1) **C1:** A SUITABLE HANGER/MECHANICAL CONNECTION IS REQUIRED.

DESIGN CRITERIA

SPECIFIED LOADS:

TOP CH.	LL	=	32.5	PSF
	DL	=	6.0	PSF
BOT CH.	LL	=	0.0	PSF
	DL	=	7.4	PSF
TOTAL LOAD		=	45.9	PSF

SPACING = 24.0 IN. C/C

LOADING IN FLAT SECTION BASED ON A SLOPE OF 6.00/12

THIS TRUSS IS DESIGNED FOR RESIDENTIAL OR SMALL BUILDING REQUIREMENTS OF PART 9, NBCC 2015

THIS DESIGN COMPLIES WITH:
- PART 9 OF BCBC 2018 , ABC 2019
- PART 9 OF OBC 2012 (2019 AMENDMENT)
- CSA 086-14
- TPIC 2014

(55 % OF 43.9 P.S.F. G.S.L. PLUS 8.4 P.S.F. RAIN LOAD) EQUALS 32.5 P.S.F. SPECIFIED ROOF LIVE LOAD

ALLOWABLE DEFL.(LL)= L/360 (0.63")
CALCULATED VERT. DEFL.(LL) = L/ 999 (0.04")
ALLOWABLE DEFL.(TL)= L/360 (0.63")
CALCULATED VERT. DEFL.(TL) = L/ 999 (0.07")

CSI: TC=0.54/1.00 (E-F:1) , BC=0.23/1.00 (I-K:1) , WB=0.39/1.00 (F-I:1) , SSI=0.12/1.00 (E-F:1)

DOL LUMBER=1.00 NAIL=1.00 LS BEND=1.00 COMP=1.00 SHEAR=1.00 TENS= 1.00

COMPANION LIVE LOAD FACTOR = 1.00

AUTOSOLVE HEELS OFF

TRUSS PLATE MANUFACTURER IS NOT RESPONSIBLE FOR QUALITY CONTROL IN THE TRUSS MANUFACTURING PLANT .

NAIL VALUES

PLATE	GRIP(DRY) (PSI) MAX	MIN	SHEAR (PLI) MAX	MIN	SECTION (PLI) MAX	MIN
MT20	650	371	1747	788	1987	1873

PLATE PLACEMENT TOL. = 0.250 inches

PLATE ROTATION TOL. = 5.0 Deg.

JSI GRIP= 0.79 (C) (INPUT = 0.90)
JSI METAL= 0.43 (L) (INPUT = 1.00)

CONTINUED ON PAGE 2

REVIEWED

JOB NAME	TRUSS NAME	QUANTITY	PLY	JOB DESC.	DRWG NO.
423616	T37	1	2	BAYVIEW WELLINGTON TRUSS DESC.	

PLATES (table is in inches)

JT	TYPE	PLATES	W	LEN	Y	X
B	TMVW-p	MT20	5.0	6.0	1.50	3.00
C	TTWW+m	MT20	4.0	6.0		
D	TMW+w	MT20	2.0	4.0		
E	TTWW+m	MT20	4.0	6.0		
F	TMVW-p	MT20	5.0	6.0	1.50	3.00
H	BMV1+p	MT20	3.0	8.0		
I	BMWW+t	MT20	6.0	10.0	4.75	2.50
J	BS-t	MT20	5.0	6.0		
K	BMWWW-t	MT20	5.0	6.0		
L	BMWW+t	MT20	6.0	10.0	4.75	2.50
M	BMV1+p	MT20	3.0	8.0		

NOTES- (1)
1) Lateral braces to be a minimum of 2X4 SPF #2.

LICENSED PROFESSIONAL ENGINEER
06-24-22
H. J. G. ALVES
100009024
PROVINCE OF ONTARIO

Structural component only
DWG# T-2215324

REVIEWED

JOB NAME	TRUSS NAME	QUANTITY	PLY	JOB DESC.	DRWG NO.
423616	T38	1	1	BAYVIEW WELLINGTON TRUSS DESC.	

Tamarack Roof Truss, Burlington

Version 8.530 S Feb 23 2022 MiTek Industries, Inc. Fri Jun 24 14:55:08 2022 Page 1
ID:c3jyj23uDijq_8pvRKbkZpy75XW-KugSQmanoKWMC26FzWqOvb2H3PkAAkfBjQGck1z32fn

Scale = 1:41.0

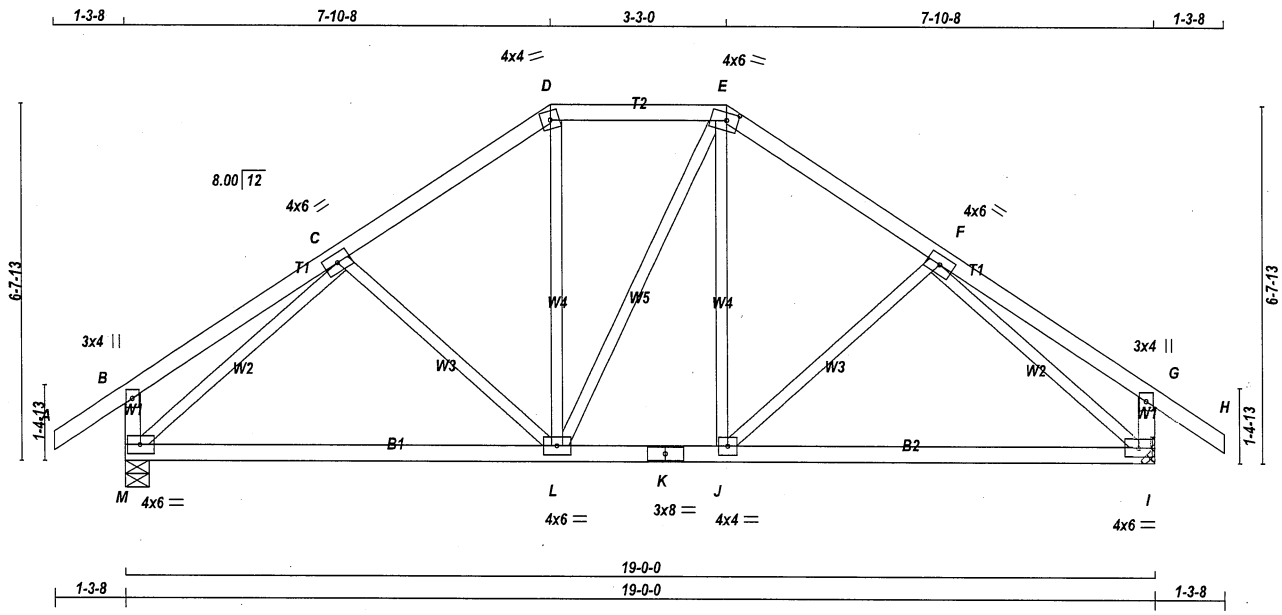

TOTAL WEIGHT = 85 lb

[M][F]

LUMBER

N. L. G. A. RULES

CHORDS	SIZE		LUMBER	DESCR.
A - D	2x4	DRY	No.2	SPF
D - E	2x4	DRY	No.2	SPF
E - H	2x4	DRY	No.2	SPF
M - B	2x4	DRY	No.2	SPF
I - G	2x4	DRY	No.2	SPF
M - K	2x4	DRY	No.2	SPF
K - I	2x4	DRY	No.2	SPF
ALL WEBS EXCEPT	2x3	DRY	No.2	SPF

DRY: SEASONED LUMBER.

PLATES (table is in inches)

JT	TYPE	PLATES	W	LEN	Y	X
B	TMV+p	MT20	3.0	4.0		
C	TMWW-t	MT20	4.0	6.0		
D	TTW-m	MT20	4.0	4.0		
E	TTWW-m	MT20	4.0	6.0	1.75	2.50
F	TMWW-t	MT20	4.0	6.0		
G	TMV+p	MT20	3.0	4.0		
I	BMVW1-t	MT20	4.0	6.0		
J	BMWW-t	MT20	4.0	4.0		
K	BS-t	MT20	3.0	8.0		
L	BMWWW-t	MT20	4.0	6.0		
M	BMVW1-t	MT20	4.0	6.0		

NOTES- (1)
1) Lateral braces to be a minimum of 2X4 SPF #2.

DIMENSIONS, SUPPORTS AND LOADINGS SPECIFIED BY FABRICATOR TO BE VERIFIED BY BUILDING DESIGNER

BEARINGS

JT	FACTORED GROSS REACTION VERT	HORZ	MAXIMUM FACTORED GROSS REACTION DOWN	HORZ	UPLIFT	INPUT BRG IN-SX	REQRD BRG IN-SX
M	1398	0	1398	0	0	5-8	5-8
I	1398	0	1398	0	0	MECHANICAL	

A SUITABLE HANGER/MECHANICAL CONNECTION IS REQUIRED AT JOINT I. MINIMUM BEARING LENGTH AT JOINT I = 3-8.

UNFACTORED REACTIONS

JT	1ST LCASE COMBINED	MAX./MIN. COMPONENT REACTIONS SNOW	LIVE	PERM.LIVE	WIND	DEAD	SOIL
M	977	706 / 0	0 / 0	0 / 0	0 / 0	271 / 0	0 / 0
I	977	706 / 0	0 / 0	0 / 0	0 / 0	271 / 0	0 / 0

BEARING MATERIAL TO BE SPF NO.2 OR BETTER AT JOINT(S) M

BRACING

TOP CHORD TO BE SHEATHED OR MAX. PURLIN SPACING = 5.72 FT.
MAX. UNBRACED BOTTOM CHORD LENGTH = 10.00 FT OR RIGID CEILING DIRECTLY APPLIED.

ALL PITCH BREAKS AND PERIMETER CORNER JOINTS MUST BE LATERALLY RESTRAINED.

LOADING

TOTAL LOAD CASES: (4)

CHORDS

MEMB. FR-TO	MAX. FACTORED FORCE (LBS)	FACTORED VERT. LOAD LC1 (PLF) FROM	TO	MAX CSI (LC)	MAX. UNBRAC LENGTH
A- B	0 / 43	-112.4	-112.4	0.15 (1)	10.00
B- C	0 / 28	-112.4	-112.4	0.28 (1)	10.00
C- D	-1129 / 0	-112.4	-112.4	0.23 (1)	5.72
D- E	-919 / 0	-112.4	-112.4	0.16 (1)	6.25
E- F	-1129 / 0	-112.4	-112.4	0.23 (1)	5.72
F- G	0 / 28	-112.4	-112.4	0.28 (1)	10.00
G- H	0 / 43	-112.4	-112.4	0.15 (1)	10.00
M- B	-324 / 0	0.0	0.0	0.03 (1)	7.81
I- G	-324 / 0	0.0	0.0	0.03 (1)	7.81
M- L	0 / 1074	-18.5	-18.5	0.31 (1)	10.00
L- K	0 / 918	-18.5	-18.5	0.30 (4)	10.00
K- J	0 / 918	-18.5	-18.5	0.30 (4)	10.00
J- I	0 / 1074	-18.5	-18.5	0.32 (1)	10.00

WEBS

MEMB. FR-TO	MAX. FACTORED FORCE (LBS)	MAX CSI (LC)
C- L	-215 / 0	0.11 (1)
L- D	0 / 259	0.06 (1)
L- E	0 / 1	0.00 (1)
J- E	0 / 258	0.06 (1)
J- F	-216 / 0	0.11 (1)
M- C	-1475 / 0	0.70 (1)
F- I	-1475 / 0	0.70 (1)

DESIGN CRITERIA

SPECIFIED LOADS:

TOP CH.	LL	=	32.5	PSF
	DL	=	6.0	PSF
BOT CH.	LL	=	0.0	PSF
	DL	=	7.4	PSF
TOTAL LOAD		=	45.9	PSF

SPACING = 24.0 IN. C/C

LOADING IN FLAT SECTION BASED ON A SLOPE OF 6.00/12

THIS TRUSS IS DESIGNED FOR RESIDENTIAL OR SMALL BUILDING REQUIREMENTS OF PART 9, NBCC 2015

THIS DESIGN COMPLIES WITH:
- PART 9 OF BCBC 2018 , ABC 2019
- PART 9 OF OBC 2012 (2019 AMENDMENT)
- CSA 086-14
- TPIC 2014

(55 % OF 43.9 P.S.F. G.S.L. PLUS 8.4 P.S.F. RAIN LOAD) EQUALS 32.5 P.S.F. SPECIFIED ROOF LIVE LOAD

ALLOWABLE DEFL.(LL)= L/360 (0.63")
CALCULATED VERT. DEFL.(LL) = L/ 999 (0.03")
ALLOWABLE DEFL.(TL)= L/360 (0.63")
CALCULATED VERT. DEFL.(TL) = L/ 999 (0.15")

CSI: TC=0.28/1.00 (F-G:1) , BC=0.32/1.00 (I-J:1) , WB=0.70/1.00 (F-I:1) , SSI=0.18/1.00 (E-F:1)

DOL LUMBER=1.00 NAIL=1.00 LS BEND=1.10 COMP=1.10 SHEAR=1.10 TENS= 1.10

COMPANION LIVE LOAD FACTOR = 1.00

TRUSS PLATE MANUFACTURER IS NOT RESPONSIBLE FOR QUALITY CONTROL IN THE TRUSS MANUFACTURING PLANT .

NAIL VALUES

PLATE	GRIP(DRY) (PSI) MAX	MIN	SHEAR (PLI) MAX	MIN	SECTION (PLI) MAX	MIN
MT20	650	371	1747	788	1987	1873

PLATE PLACEMENT TOL. = 0.250 inches

PLATE ROTATION TOL. = 5.0 Deg.

JSI GRIP= 0.76 (M) (INPUT = 0.90)
JSI METAL= 0.47 (K) (INPUT = 1.00)

LICENSED PROFESSIONAL ENGINEER
06-24-22
H. J. G. ALVES
100009024
PROVINCE OF ONTARIO

Structural component only
DWG# T-2215325

REVIEWED

JOB NAME	TRUSS NAME	QUANTITY	PLY	JOB DESC.	DRWG NO.
423616	T39	1	1	BAYVIEW WELLINGTON TRUSS DESC.	

Tamarack Roof Truss, Burlington

Version 8.530 S Feb 23 2022 MiTek Industries, Inc. Fri Jun 24 14:55:09 2022 Page 1
ID:c3jyj23uDijq_8pvRKbkZpy75XW-o4Dqd6bPZeeDqChRXDLdSobLDo0bvFcKy4?AHUz32fm

Scale = 1:40.9

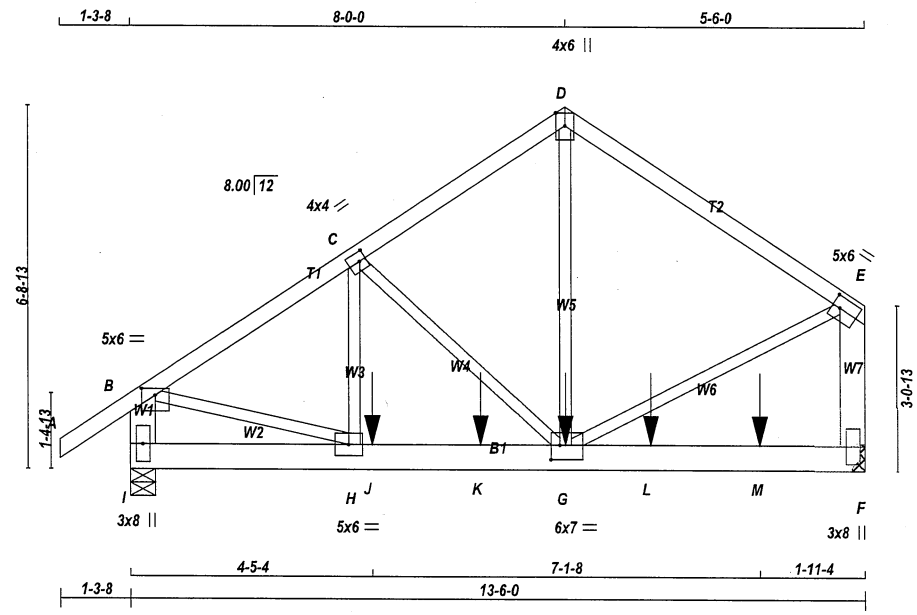

TOTAL WEIGHT = 70 lb
[M]

LUMBER
N. L. G. A. RULES

CHORDS	SIZE		LUMBER	DESCR.
A - D	2x4	DRY	No.2	SPF
D - E	2x4	DRY	No.2	SPF
I - B	2x6	DRY	No.2	SPF
F - E	2x6	DRY	No.2	SPF
I - F	2x6	DRY	No.2	SPF
ALL WEBS EXCEPT	2x3	DRY	No.2	SPF

DRY: SEASONED LUMBER.

PLATES (table is in inches)

JT	TYPE	PLATES	W	LEN	Y	X
B	TMVW-p	MT20	5.0	6.0	1.50	3.00
C	TMWW-t	MT20	4.0	4.0	2.00	1.50
D	TTW+p	MT20	4.0	6.0	Edge	
E	TMVW-t	MT20	5.0	6.0	2.50	1.75
F	BMV1+p	MT20	3.0	8.0		
G	BMWWW-t	MT20	6.0	7.0	3.25	2.00
H	BMWW-t	MT20	5.0	6.0		
I	BMV1+p	MT20	3.0	8.0		

Edge - INDICATES REFERENCE CORNER OF PLATE TOUCHES EDGE OF CHORD.

NOTES- (1)
1) Lateral braces to be a minimum of 2X4 SPF #2.

DIMENSIONS, SUPPORTS AND LOADINGS SPECIFIED BY FABRICATOR TO BE VERIFIED BY BUILDING DESIGNER

BEARINGS

JT	FACTORED GROSS REACTION VERT	HORZ	MAXIMUM FACTORED GROSS REACTION DOWN	HORZ	UPLIFT	INPUT BRG IN-SX	REQRD BRG IN-SX
I	1793	0	1793	0	0	5-8	5-8
F	1908	0	1908	0	0	MECHANICAL	

A SUITABLE HANGER/MECHANICAL CONNECTION IS REQUIRED AT JOINT F. MINIMUM BEARING LENGTH AT JOINT F = 3-8.

UNFACTORED REACTIONS

JT	1ST LCASE COMBINED	MAX./MIN. COMPONENT REACTIONS SNOW	LIVE	PERM.LIVE	WIND	DEAD	SOIL
I	1251	919 / 0	0 / 0	0 / 0	0 / 0	332 / 0	0 / 0
F	1332	971 / 0	0 / 0	0 / 0	0 / 0	361 / 0	0 / 0

BEARING MATERIAL TO BE SPF NO.2 OR BETTER AT JOINT(S) I

BRACING
TOP CHORD TO BE SHEATHED OR MAX. PURLIN SPACING = 4.31 FT.
MAX. UNBRACED BOTTOM CHORD LENGTH = 10.00 FT OR RIGID CEILING DIRECTLY APPLIED.

ALL PITCH BREAKS AND PERIMETER CORNER JOINTS MUST BE LATERALLY RESTRAINED.

LOADING
TOTAL LOAD CASES: (4)

CHORDS

MEMB. FR-TO	MAX. FACTORED FORCE (LBS)	FACTORED VERT. LOAD (PLF) FROM	TO	LC1	MAX CSI (LC)	MAX. UNBRAC LENGTH
A- B	0 / 43	-112.4	-112.4	0.17 (1)	10.00	
B- C	-1848 / 0	-112.4	-112.4	0.39 (1)	4.48	
C- D	-1420 / 0	-112.4	-112.4	0.35 (1)	5.02	
D- E	-1391 / 0	-112.4	-112.4	0.76 (1)	4.31	
I- B	-1755 / 0	0.0	0.0	0.13 (1)	7.47	
F- E	-1641 / 0	0.0	0.0	0.18 (1)	7.66	
I- H	0 / 0	-18.5	-18.5	0.04 (4)	10.00	
H- J	0 / 1561	-18.5	-18.5	0.56 (1)	10.00	
J- K	0 / 1561	-18.5	-18.5	0.56 (1)	10.00	
K- G	0 / 1561	-18.5	-18.5	0.56 (1)	10.00	
G- L	0 / 0	-18.5	-18.5	0.36 (1)	10.00	
L- M	0 / 0	-18.5	-18.5	0.36 (1)	10.00	
M- F	0 / 0	-18.5	-18.5	0.36 (1)	10.00	

WEBS

MEMB. FR-TO	MAX. FACTORED FORCE (LBS)	MAX CSI (LC)
H- C	0 / 104	0.03 (4)
C- G	-559 / 0	0.27 (1)
G- D	0 / 1067	0.26 (1)
B- H	0 / 1606	0.40 (1)
G- E	0 / 1286	0.32 (1)

SPECIFIED CONCENTRATED LOADS (LBS)

JT	LOC.	LC1	MAX-	MAX+	FACE	DIR.	TYPE	HEEL	CONN.
G	8-0-0	-238	-238	---	BACK	VERT	TOTAL	---	C1
J	4-5-4	-303	-303	---	BACK	VERT	TOTAL	---	C1
K	6-5-4	-238	-238	---	BACK	VERT	TOTAL	---	C1
L	9-6-12	-238	-238	---	BACK	VERT	TOTAL	---	C1
M	11-6-12	-223	-223	---	BACK	VERT	TOTAL	---	C1

CONNECTION REQUIREMENTS

1) **C1:** A SUITABLE HANGER/MECHANICAL CONNECTION IS REQUIRED.

DESIGN CRITERIA

SPECIFIED LOADS:

TOP CH.	LL	=	32.5	PSF
	DL	=	6.0	PSF
BOT CH.	LL	=	0.0	PSF
	DL	=	7.4	PSF
TOTAL LOAD		=	45.9	PSF

SPACING = 24.0 IN. C/C

THIS TRUSS IS DESIGNED FOR RESIDENTIAL OR SMALL BUILDING REQUIREMENTS OF PART 9, NBCC 2015

THIS DESIGN COMPLIES WITH:
- PART 9 OF BCBC 2018 , ABC 2019
- PART 9 OF OBC 2012 (2019 AMENDMENT)
- CSA 086-14
- TPIC 2014

(55 % OF 43.9 P.S.F. G.S.L. PLUS 8.4 P.S.F. RAIN LOAD) EQUALS 32.5 P.S.F. SPECIFIED ROOF LIVE LOAD

ALLOWABLE DEFL.(LL)= L/360 (0.45")
CALCULATED VERT. DEFL.(LL) = L/ 999 (0.05")
ALLOWABLE DEFL.(TL)= L/360 (0.45")
CALCULATED VERT. DEFL.(TL) = L/ 999 (0.09")

CSI: TC=0.76/1.00 (D-E:1) , BC=0.56/1.00 (G-H:1) , WB=0.40/1.00 (B-H:1) , SSI=0.33/1.00 (F-G:1)

DOL LUMBER=1.00 NAIL=1.00 LS BEND=1.00 COMP=1.00 SHEAR=1.00 TENS= 1.00

COMPANION LIVE LOAD FACTOR = 1.00

AUTOSOLVE HEELS OFF

TRUSS PLATE MANUFACTURER IS NOT RESPONSIBLE FOR QUALITY CONTROL IN THE TRUSS MANUFACTURING PLANT .

NAIL VALUES

PLATE	GRIP(DRY) (PSI) MAX	MIN	SHEAR (PLI) MAX	MIN	SECTION (PLI) MAX	MIN
MT20	650	371	1747	788	1987	1873

PLATE PLACEMENT TOL. = 0.250 inches

PLATE ROTATION TOL. = 5.0 Deg.

JSI GRIP= 0.88 (E) (INPUT = 0.90)
JSI METAL= 0.37 (B) (INPUT = 1.00)

LICENSED PROFESSIONAL ENGINEER
06-24-22
H. J. G. ALVES
100009024
PROVINCE OF ONTARIO

Structural component only
DWG# T-2215326

REVIEWED

JOB NAME	TRUSS NAME	QUANTITY	PLY	JOB DESC.	DRWG NO.
423616	T40	1	2	BAYVIEW WELLINGTON TRUSS DESC.	

Tamarack Roof Truss, Burlington

Version 8.530 S Feb 23 2022 MiTek Industries, Inc. Fri Jun 24 14:55:09 2022 Page 1
ID:c3jyj23uDijq_8pvRKbkZpy75XW-o4Dqd6bPZeeDqChRXDLdSobU6o0GvJ?Ky4?AHUz32fm

Scale = 1:31.4

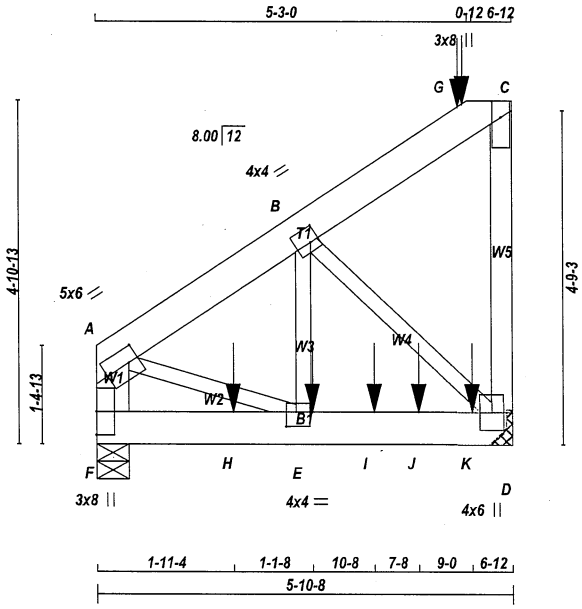

TOTAL WEIGHT = 2 X 36 = 73 lb [M]

LUMBER

N. L. G. A. RULES

CHORDS	SIZE		LUMBER	DESCR.
A - C	2x6	DRY	No.2	SPF
D - C	2x4	DRY	No.2	SPF
F - A	2x6	DRY	No.2	SPF
F - D	2x6	DRY	No.2	SPF
ALL WEBS	2x3	DRY	No.2	SPF

DRY: SEASONED LUMBER.

DESIGN CONSISTS OF 2 TRUSSES BUILT SEPARATELY THEN FASTENED TOGETHER AS FOLLOWS:

CHORDS	#ROWS	SURFACE SPACING (IN)	LOAD(PLF)
TOP CHORDS : (0.122"X3") SPIRAL NAILS			
A- C	2	12	SIDE(0.0)
F- A	2	12	TOP
C- D	1	12	TOP
BOTTOM CHORDS : (0.122"X3") SPIRAL NAILS			
F- D	2	12	SIDE(183.1)
WEBS : (0.122"X3") SPIRAL NAILS			
2x3	1	6	

NAILS TO BE DRIVEN FROM ONE SIDE ONLY.

GIRDER NAILING ASSUMES NAILED HANGERS ARE FASTENED WITH MIN. 3-0 INCH NAILS.

TOP - COMPONENTS ARE LOADED FROM THE TOP AND MUST BE PLACED ON TOP EDGE OF ALL PLIES FOR THE LOAD TO BE TRANSFERRED TO EACH PLY.

SIDE - PLF SHOWN IS THE EQUIVALENT UDL APPLIED TO ONE SIDE THAT THE CORRESPONDING NAILING PATTERN SHALL BE CAPABLE OF TRANSFERING. REMAINING PLF MUST BE APPLIED ON THE OPPOSITE SIDE OR ON THE TOP.

PLATES (table is in inches)

JT	TYPE	PLATES	W	LEN	Y	X
A	TMVW-t	MT20	5.0	6.0	2.50	1.75
B	TMWW-t	MT20	4.0	4.0	2.50	1.50
C	TMV+p	MT20	3.0	8.0	Edge	
D	BMVW1+p	MT20	4.0	6.0		

Structural component only
DWG# T-2215327

DIMENSIONS, SUPPORTS AND LOADINGS SPECIFIED BY FABRICATOR TO BE VERIFIED BY BUILDING DESIGNER

BEARINGS

JT	FACTORED GROSS REACTION VERT	HORZ	MAXIMUM FACTORED GROSS REACTION DOWN	HORZ	UPLIFT	INPUT BRG IN-SX	REQRD BRG IN-SX
D	2487	0	2487	0	0	MECHANICAL	
F	956	0	956	0	0	5-8	5-8

A SUITABLE HANGER/MECHANICAL CONNECTION IS REQUIRED AT JOINT D. MINIMUM BEARING LENGTH AT JOINT D = 4-0.

UNFACTORED REACTIONS

JT	1ST LCASE COMBINED	MAX./MIN. COMPONENT REACTIONS SNOW	LIVE	PERM.LIVE	WIND	DEAD	SOIL
D	1735	1277 / 0	0 / 0	0 / 0	0 / 0	458 / 0	0 / 0
F	670	474 / 0	0 / 0	0 / 0	0 / 0	195 / 0	0 / 0

BEARING MATERIAL TO BE SPF NO.2 OR BETTER AT JOINT(S) F

BRACING

TOP CHORD TO BE SHEATHED OR MAX. PURLIN SPACING = 6.25 FT.
MAX. UNBRACED BOTTOM CHORD LENGTH = 10.00 FT OR RIGID CEILING DIRECTLY APPLIED.

ALL PITCH BREAKS AND PERIMETER CORNER JOINTS MUST BE LATERALLY RESTRAINED.

LOADING

TOTAL LOAD CASES: (4)

CHORDS MEMB. FR-TO	MAX. FACTORED FORCE (LBS)	FACTORED VERT. LOAD (PLF) FROM	TO	LC1 MAX CSI (LC)	MAX. UNBRAC LENGTH	WEBS MEMB. FR-TO	MAX. FACTORED FORCE (LBS)	MAX CSI (LC)
A- B	-1135 / 0	-112.4	-112.4	0.06 (1)	6.25	E- B	0 / 1030	0.13 (1)
B- G	0 / 65	-112.4	-112.4	0.13 (1)	6.25	A- E	0 / 1011	0.13 (1)
G- C	0 / 65	-112.4	-112.4	0.13 (1)	6.25	B- D	-1349 / 0	0.18 (1)
D- C	-574 / 0	0.0	0.0	0.12 (1)	7.81			
F- A	-1055 / 0	0.0	0.0	0.04 (1)	7.81			
F- H	0 / 0	-18.5	-18.5	0.15 (1)	10.00			
H- E	0 / 0	-18.5	-18.5	0.15 (1)	10.00			
E- I	0 / 967	-18.5	-18.5	0.52 (1)	10.00			
I- J	0 / 967	-18.5	-18.5	0.52 (1)	10.00			
J- K	0 / 967	-18.5	-18.5	0.52 (1)	10.00			
K- D	0 / 967	-18.5	-18.5	0.52 (1)	10.00			

SPECIFIED CONCENTRATED LOADS (LBS)

JT	LOC.	LC1	MAX-	MAX+	FACE	DIR.	TYPE	HEEL	CONN.
E	3-0-12	-73	-73	---	FRONT	VERT	TOTAL	---	C1
G	5-3-0	-257	-257	---	BACK	VERT	TOTAL	---	C1
G	5-3-12	-142	-142	---	BACK	VERT	TOTAL	---	C1
H	1-11-4	-24	-24	---	BACK	VERT	TOTAL	---	C1
I	3-11-4	-24	-24	---	BACK	VERT	TOTAL	---	C1
J	4-6-12	-1317	-1317	---	FRONT	VERT	TOTAL	---	C1
K	5-3-12	-27	-27	---	BACK	VERT	TOTAL	---	C1

CONNECTION REQUIREMENTS

1) **C1:** A SUITABLE HANGER/MECHANICAL CONNECTION IS REQUIRED.

DESIGN CRITERIA

SPECIFIED LOADS:

TOP CH.	LL	=	32.5	PSF
	DL	=	6.0	PSF
BOT CH.	LL	=	0.0	PSF
	DL	=	7.4	PSF
TOTAL LOAD		=	45.9	PSF

SPACING = 24.0 IN. C/C

THIS TRUSS IS DESIGNED FOR RESIDENTIAL OR SMALL BUILDING REQUIREMENTS OF PART 9, NBCC 2015

THIS DESIGN COMPLIES WITH:
- PART 9 OF BCBC 2018 , ABC 2019
- PART 9 OF OBC 2012 (2019 AMENDMENT)
- CSA 086-14
- TPIC 2014

(55 % OF 43.9 P.S.F. G.S.L. PLUS 8.4 P.S.F. RAIN LOAD) EQUALS 32.5 P.S.F. SPECIFIED ROOF LIVE LOAD

ALLOWABLE DEFL.(LL)= L/360 (0.20")
CALCULATED VERT. DEFL.(LL) = L/ 999 (0.02")
ALLOWABLE DEFL.(TL)= L/360 (0.20")
CALCULATED VERT. DEFL.(TL) = L/ 999 (0.03")

CSI: TC=0.13/1.00 (B-C:1) , BC=0.52/1.00 (D-E:1) , WB=0.18/1.00 (B-D:1) , SSI=0.34/1.00 (D-E:1)

DOL LUMBER=1.00 NAIL=1.00 LS BEND=1.00 COMP=1.00 SHEAR=1.00 TENS= 1.00

COMPANION LIVE LOAD FACTOR = 1.00

AUTOSOLVE RIGHT HEEL ONLY

TRUSS PLATE MANUFACTURER IS NOT RESPONSIBLE FOR QUALITY CONTROL IN THE TRUSS MANUFACTURING PLANT .

NAIL VALUES

PLATE	GRIP(DRY) (PSI) MAX	MIN	SHEAR (PLI) MAX	MIN	SECTION (PLI) MAX	MIN
MT20	650	371	1747	788	1987	1873

PLATE PLACEMENT TOL. = 0.250 inches

PLATE ROTATION TOL. = 5.0 Deg.

JSI GRIP= 0.89 (E) (INPUT = 0.90)
JSI METAL= 0.22 (D) (INPUT = 1.00)

CONTINUED ON PAGE 2

REVIEWED

JOB NAME	TRUSS NAME	QUANTITY	PLY	JOB DESC. BAYVIEW WELLINGTON	DRWG NO.
423616	T40	1	2	TRUSS DESC.	

PLATES (table is in inches)

JT	TYPE	PLATES	W	LEN	Y	X
E	BMWW-t	MT20	4.0	4.0	2.50	1.75
F	BMV1+p	MT20	3.0	8.0		

Edge - INDICATES REFERENCE CORNER OF PLATE TOUCHES EDGE OF CHORD.

NOTES- (1)
1) Lateral braces to be a minimum of 2X4 SPF #2.

LICENSED PROFESSIONAL ENGINEER
06-24-22
H. J. G. ALVES
100009024
PROVINCE OF ONTARIO

Structural component only
DWG# T-2215327

REVIEWED

JOB NAME	TRUSS NAME	QUANTITY	PLY	JOB DESC.	DRWG NO.
423616	T41S	1	1	BAYVIEW WELLINGTON TRUSS DESC.	

Tamarack Roof Truss, Burlington

Version 8.530 S Feb 23 2022 MiTek Industries, Inc. Fri Jun 24 14:55:11 2022 Page 1
ID:c3jyj23uDijq_8pvRKbkZpy75XW-ITLa2ndf5Fvx3VqpeeN5XDgq?cq_NEDdPOUHLMz32fk

Scale = 1:27.6

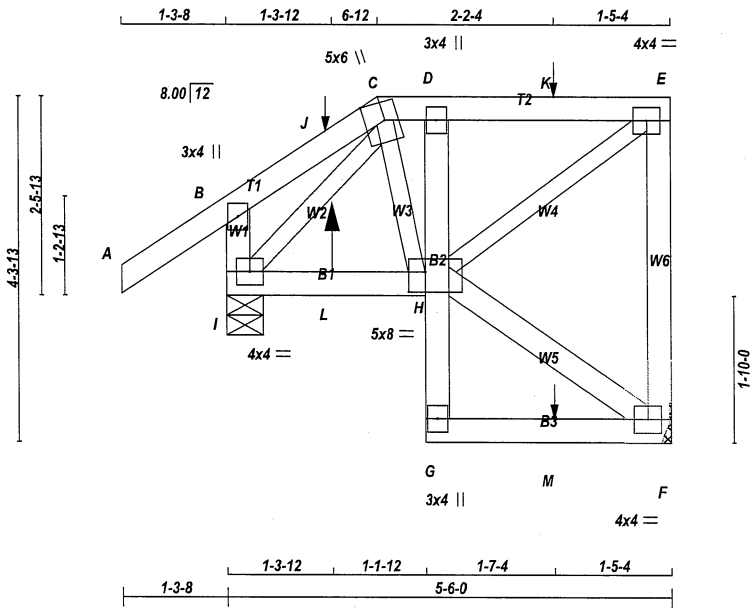

TOTAL WEIGHT = 34 lb

LUMBER
N. L. G. A. RULES

CHORDS	SIZE		LUMBER	DESCR.
A - C	2x4	DRY	No.2	SPF
C - E	2x4	DRY	No.2	SPF
F - E	2x4	DRY	No.2	SPF
I - B	2x4	DRY	No.2	SPF
I - H	2x4	DRY	No.2	SPF
G - D	2x4	DRY	No.2	SPF
G - F	2x4	DRY	No.2	SPF
ALL WEBS	2x3	DRY	No.2	SPF
EXCEPT				
H - F	2x4	DRY	No.2	SPF

DRY: SEASONED LUMBER.

PLATES (table is in inches)

JT	TYPE	PLATES	W	LEN	Y	X
B	TMV+p	MT20	3.0	4.0		
C	TTWW+m	MT20	5.0	6.0	Edge	3.00
D	TMV+p	MT20	3.0	4.0		
E	TMVW-t	MT20	4.0	4.0		
F	BMVW1-t	MT20	4.0	4.0		
G	BMV+p	MT20	3.0	4.0		
H	BVMWWW-l	MT20	5.0	8.0	3.00	2.50
I	BMVW1-t	MT20	4.0	4.0		

Edge - INDICATES REFERENCE CORNER OF PLATE TOUCHES EDGE OF CHORD.

NOTES- (1)
1) Lateral braces to be a minimum of 2X4 SPF #2.

DIMENSIONS, SUPPORTS AND LOADINGS SPECIFIED BY FABRICATOR TO BE VERIFIED BY BUILDING DESIGNER

BEARINGS

JT	FACTORED GROSS REACTION VERT	HORZ	MAXIMUM FACTORED GROSS REACTION DOWN	HORZ	UPLIFT	INPUT BRG IN-SX	REQRD BRG IN-SX
F	339	0	339	0	0	MECHANICAL	
I	527	0	527	0	0	5-8	5-8

A SUITABLE HANGER/MECHANICAL CONNECTION IS REQUIRED AT JOINT F. MINIMUM BEARING LENGTH AT JOINT F = 1-8.

UNFACTORED REACTIONS

JT	1ST LCASE COMBINED	MAX./MIN. COMPONENT REACTIONS SNOW	LIVE	PERM.LIVE	WIND	DEAD	SOIL
F	238	166 / 0	0 / 0	0 / 0	0 / 0	72 / 0	0 / 0
I	367	274 / 0	0 / 0	0 / 0	0 / 0	92 / 0	0 / 0

BEARING MATERIAL TO BE SPF NO.2 OR BETTER AT JOINT(S) I

BRACING
TOP CHORD TO BE SHEATHED OR MAX. PURLIN SPACING = 6.25 FT.
MAX. UNBRACED BOTTOM CHORD LENGTH = 7.81 FT OR RIGID CEILING DIRECTLY APPLIED.

ALL PITCH BREAKS AND PERIMETER CORNER JOINTS MUST BE LATERALLY RESTRAINED.

LOADING
TOTAL LOAD CASES: (7)

CHORDS

MEMB. FR-TO	MAX. FACTORED FORCE (LBS)	FACTORED VERT. LOAD LC1 (PLF) FROM	TO	MAX CSI (LC)	MAX. UNBRAC LENGTH
A- B	0 / 43	-112.4	-112.4	0.17 (1)	10.00
B- J	-42 / 0	-112.4	-112.4	0.16 (5)	6.25
J- C	-42 / 0	-112.4	-112.4	0.16 (5)	6.25
C- D	-231 / 0	-112.4	-112.4	0.11 (5)	6.25
D- K	-227 / 0	-112.4	-112.4	0.13 (1)	6.25
K- E	-227 / 0	-112.4	-112.4	0.13 (1)	6.25
F- E	-309 / 0	0.0	0.0	0.09 (1)	7.81
I- B	-317 / 0	0.0	0.0	0.04 (1)	7.81
I- L	0 / 166	-18.5	-18.5	0.05 (4)	10.00
L- H	0 / 166	-18.5	-18.5	0.05 (4)	10.00
G- H	0 / 30	0.0	0.0	0.02 (1)	10.00
H- D	-338 / 0	0.0	0.0	0.01 (1)	7.81
G- M	0 / 4	-18.5	-18.5	0.05 (4)	10.00
M- F	0 / 4	-18.5	-18.5	0.05 (4)	10.00

WEBS

MEMB. FR-TO	MAX. FACTORED FORCE (LBS)	MAX CSI (LC)
H- F	-5 / 0	0.00 (1)
H- E	0 / 285	0.07 (1)
C- H	0 / 244	0.06 (5)
I- C	-252 / 0	0.05 (1)

SPECIFIED CONCENTRATED LOADS (LBS)

JT	LOC.	LC1	MAX-	MAX+	FACE	DIR.	TYPE	HEEL	CONN.
J	1-3-12	1	1	74	BACK	VERT	TOTAL	---	C1
K	4-0-12	1	1	---	BACK	VERT	TOTAL	---	C1
L	1-3-12	6	1	11	BACK	VERT	TOTAL	---	C1
M	4-0-12	1	1	---	BACK	VERT	TOTAL	---	C1

CONNECTION REQUIREMENTS

1) **C1:** A SUITABLE HANGER/MECHANICAL CONNECTION IS REQUIRED.

DESIGN CRITERIA

SPECIFIED LOADS:

TOP CH.	LL	=	32.5	PSF
	DL	=	6.0	PSF
BOT CH.	LL	=	0.0	PSF
	DL	=	7.4	PSF
TOTAL LOAD		=	45.9	PSF

SPACING = 24.0 IN. C/C

LOADING IN FLAT SECTION BASED ON A SLOPE OF 6.00/12

THIS TRUSS IS DESIGNED FOR RESIDENTIAL OR SMALL BUILDING REQUIREMENTS OF PART 9, NBCC 2015

THIS DESIGN COMPLIES WITH:
- PART 9 OF BCBC 2018 , ABC 2019
- PART 9 OF OBC 2012 (2019 AMENDMENT)
- CSA 086-14
- TPIC 2014

DESIGN ASSUMPTIONS
-OVERHANG NOT TO BE ALTERED OR CUT OFF.

(55 % OF 43.9 P.S.F. G.S.L. PLUS 8.4 P.S.F. RAIN LOAD) EQUALS 32.5 P.S.F. SPECIFIED ROOF LIVE LOAD

ALLOWABLE DEFL.(LL)= L/360 (0.19")
CALCULATED VERT. DEFL.(LL) = L/ 999 (0.00")
ALLOWABLE DEFL.(TL)= L/360 (0.19")
CALCULATED VERT. DEFL.(TL) = L/ 999 (0.01")

CSI: TC=0.17/1.00 (A-B:1) , BC=0.05/1.00 (H-I:4) , WB=0.07/1.00 (E-H:1) , SSI=0.16/1.00 (D-E:5)

DOL LUMBER=1.00 NAIL=1.00 LS BEND=1.00 COMP=1.00 SHEAR=1.00 TENS= 1.00

COMPANION LIVE LOAD FACTOR = 1.00

AUTOSOLVE RIGHT HEEL ONLY

TRUSS PLATE MANUFACTURER IS NOT RESPONSIBLE FOR QUALITY CONTROL IN THE TRUSS MANUFACTURING PLANT .

NAIL VALUES

PLATE	GRIP(DRY) (PSI) MAX	MIN	SHEAR (PLI) MAX	MIN	SECTION (PLI) MAX	MIN
MT20	650	371	1747	788	1987	1873

PLATE PLACEMENT TOL. = 0.250 inches

PLATE ROTATION TOL. = 5.0 Deg.

JSI GRIP= 0.38 (H) (INPUT = 0.90)
JSI METAL= 0.11 (B) (INPUT = 1.00)

LICENSED PROFESSIONAL ENGINEER
06-24-22
H. J. G. ALVES
100009024
PROVINCE OF ONTARIO

Structural component only
DWG# T-2215328

REVIEWED

JOB NAME	TRUSS NAME	QUANTITY	PLY	JOB DESC.	DRWG NO.
423616	T41SZ	1	1	BAYVIEW WELLINGTON TRUSS DESC.	

Tamarack Roof Truss, Burlington

Version 8.530 S Feb 23 2022 MiTek Industries, Inc. Fri Jun 24 14:55:12 2022 Page 1
ID:c3jyj23uDijq_8pvRKbkZpy75XW-DfvzF7dHsZ1ohfP0CLuK4RD_l09d6h7ne2Eqtoz32fj

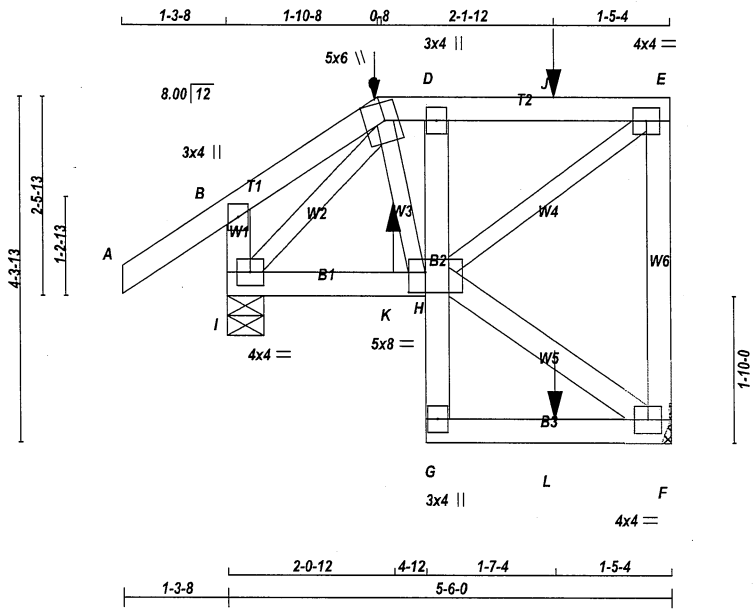

Scale = 1:27.6

TOTAL WEIGHT = 34 lb

LUMBER
N. L. G. A. RULES

CHORDS	SIZE		LUMBER	DESCR.
A - C	2x4	DRY	No.2	SPF
C - E	2x4	DRY	No.2	SPF
F - E	2x4	DRY	No.2	SPF
I - B	2x4	DRY	No.2	SPF
I - H	2x4	DRY	No.2	SPF
G - D	2x4	DRY	No.2	SPF
G - F	2x4	DRY	No.2	SPF
ALL WEBS	2x3	DRY	No.2	SPF
EXCEPT				
H - F	2x4	DRY	No.2	SPF

DRY: SEASONED LUMBER.

PLATES (table is in inches)

JT	TYPE	PLATES	W	LEN	Y	X
B	TMV+p	MT20	3.0	4.0		
C	TTWW+m	MT20	5.0	6.0	Edge	3.00
D	TMV+p	MT20	3.0	4.0		
E	TMVW-t	MT20	4.0	4.0		
F	BMVW1-t	MT20	4.0	4.0		
G	BMV+p	MT20	3.0	4.0		
H	BVMWWW-l	MT20	5.0	8.0	3.00	2.50
I	BMVW1-t	MT20	4.0	4.0		

Edge - INDICATES REFERENCE CORNER OF PLATE TOUCHES EDGE OF CHORD.

NOTES- (1)
1) Lateral braces to be a minimum of 2X4 SPF #2.

Structural component only
DWG# T-2215329

DIMENSIONS, SUPPORTS AND LOADINGS SPECIFIED BY FABRICATOR TO BE VERIFIED BY BUILDING DESIGNER

BEARINGS

JT	FACTORED GROSS REACTION VERT	HORZ	MAXIMUM FACTORED GROSS REACTION DOWN	HORZ	UPLIFT	INPUT BRG IN-SX	REQRD BRG IN-SX
F	453	0	453	0	0	MECHANICAL	
I	569	0	569	0	0	5-8	5-8

A SUITABLE HANGER/MECHANICAL CONNECTION IS REQUIRED AT JOINT F. MINIMUM BEARING LENGTH AT JOINT F = 1-8.

UNFACTORED REACTIONS

JT	1ST LCASE COMBINED	MAX./MIN. COMPONENT REACTIONS SNOW	LIVE	PERM.LIVE	WIND	DEAD	SOIL
F	318	222 / 0	0 / 0	0 / 0	0 / 0	95 / 0	0 / 0
I	396	295 / 0	0 / 0	0 / 0	0 / 0	101 / 0	0 / 0

BEARING MATERIAL TO BE SPF NO.2 OR BETTER AT JOINT(S) I

BRACING
TOP CHORD TO BE SHEATHED OR MAX. PURLIN SPACING = 6.25 FT.
MAX. UNBRACED BOTTOM CHORD LENGTH = 7.81 FT OR RIGID CEILING DIRECTLY APPLIED.

ALL PITCH BREAKS AND PERIMETER CORNER JOINTS MUST BE LATERALLY RESTRAINED.

LOADING
TOTAL LOAD CASES: (7)

CHORDS

MEMB. FR-TO	MAX. FACTORED FORCE (LBS)	FACTORED VERT. LOAD LC1 (PLF) FROM	TO	MAX CSI (LC)	MAX. UNBRAC LENGTH
A- B	0 / 43	-112.4	-112.4	0.17 (1)	10.00
B- C	-31 / 0	-112.4	-112.4	0.16 (1)	6.25
C- D	-301 / 0	-112.4	-112.4	0.19 (1)	6.25
D- J	-296 / 0	-112.4	-112.4	0.23 (1)	6.25
J- E	-296 / 0	-112.4	-112.4	0.23 (1)	6.25
F- E	-411 / 0	0.0	0.0	0.12 (1)	7.81
I- B	-317 / 0	0.0	0.0	0.04 (1)	7.81
I- K	0 / 201	-18.5	-18.5	0.06 (4)	10.00
K- H	0 / 201	-18.5	-18.5	0.06 (4)	10.00
G- H	0 / 42	0.0	0.0	0.02 (1)	10.00
H- D	-492 / 0	0.0	0.0	0.02 (1)	7.81
G- L	0 / 6	-18.5	-18.5	0.09 (4)	10.00
L- F	0 / 6	-18.5	-18.5	0.09 (4)	10.00

WEBS

MEMB. FR-TO	MAX. FACTORED FORCE (LBS)	MAX CSI (LC)
H- F	-7 / 0	0.00 (1)
H- E	0 / 371	0.09 (1)
C- H	0 / 335	0.08 (1)
I- C	-305 / 0	0.06 (1)

SPECIFIED CONCENTRATED LOADS (LBS)

JT	LOC.	LC1	MAX-	MAX+	FACE	DIR.	TYPE	HEEL	CONN.
C	1-11-0	-0	-0	86	FRONT	VERT	TOTAL	---	C1
J	4-0-12	-91	-91	---	FRONT	VERT	TOTAL	---	C1
K	2-0-12	5	1	10	FRONT	VERT	TOTAL	---	C1
L	4-0-12	-18	-18	---	FRONT	VERT	TOTAL	---	C1

CONNECTION REQUIREMENTS

1) **C1:** A SUITABLE HANGER/MECHANICAL CONNECTION IS REQUIRED.

DESIGN CRITERIA

SPECIFIED LOADS:

TOP CH.	LL	=	32.5	PSF
	DL	=	6.0	PSF
BOT CH.	LL	=	0.0	PSF
	DL	=	7.4	PSF
TOTAL LOAD		=	45.9	PSF

SPACING = 24.0 IN. C/C

LOADING IN FLAT SECTION BASED ON A SLOPE OF 6.00/12

THIS TRUSS IS DESIGNED FOR RESIDENTIAL OR SMALL BUILDING REQUIREMENTS OF PART 9, NBCC 2015

THIS DESIGN COMPLIES WITH:
- PART 9 OF BCBC 2018 , ABC 2019
- PART 9 OF OBC 2012 (2019 AMENDMENT)
- CSA 086-14
- TPIC 2014

DESIGN ASSUMPTIONS
-OVERHANG NOT TO BE ALTERED OR CUT OFF.

(55 % OF 43.9 P.S.F. G.S.L. PLUS 8.4 P.S.F. RAIN LOAD) EQUALS 32.5 P.S.F. SPECIFIED ROOF LIVE LOAD

ALLOWABLE DEFL.(LL)= L/360 (0.19")
CALCULATED VERT. DEFL.(LL) = L/ 999 (0.00")
ALLOWABLE DEFL.(TL)= L/360 (0.19")
CALCULATED VERT. DEFL.(TL) = L/ 999 (0.01")

CSI: TC=0.23/1.00 (D-E:1) , BC=0.09/1.00 (F-G:4) , WB=0.09/1.00 (E-H:1) , SSI=0.23/1.00 (D-E:1)

DOL LUMBER=1.00 NAIL=1.00 LS BEND=1.00 COMP=1.00 SHEAR=1.00 TENS= 1.00

COMPANION LIVE LOAD FACTOR = 1.00

AUTOSOLVE RIGHT HEEL ONLY

TRUSS PLATE MANUFACTURER IS NOT RESPONSIBLE FOR QUALITY CONTROL IN THE TRUSS MANUFACTURING PLANT .

NAIL VALUES

PLATE	GRIP(DRY) (PSI) MAX	MIN	SHEAR (PLI) MAX	MIN	SECTION (PLI) MAX	MIN
MT20	650	371	1747	788	1987	1873

PLATE PLACEMENT TOL. = 0.250 inches

PLATE ROTATION TOL. = 5.0 Deg.

JSI GRIP= 0.50 (H) (INPUT = 0.90)
JSI METAL= 0.11 (H) (INPUT = 1.00)

REVIEWED

JOB NAME	TRUSS NAME	QUANTITY	PLY	JOB DESC.	DRWG NO.
423616	T42S	2	1	BAYVIEW WELLINGTON TRUSS DESC.	

Tamarack Roof Truss, Burlington

Version 8.530 S Feb 23 2022 MiTek Industries, Inc. Fri Jun 24 14:55:12 2022 Page 1
ID:c3jyj23uDijq_8pvRKbkZpy75XW-DfvzF7dHsZ1ohfP0CLuK4RD??0AL6g4ne2Eqtoz32fj

Scale = 1:35.5

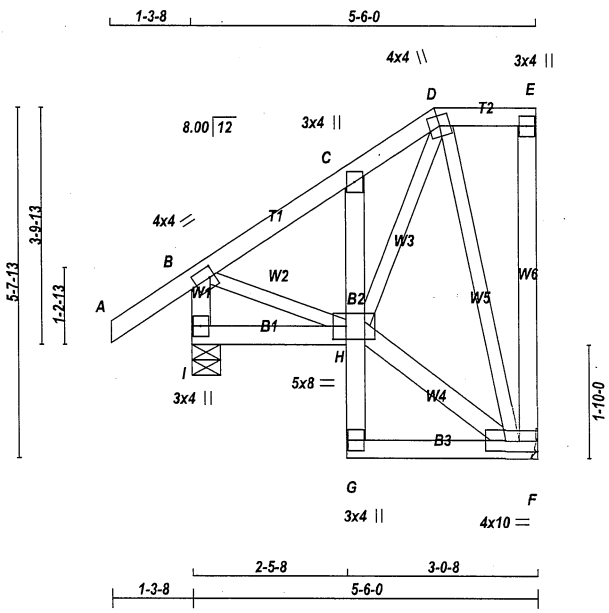

TOTAL WEIGHT = 2 X 39 = 78 lb [M]

LUMBER
N. L. G. A. RULES

CHORDS	SIZE		LUMBER	DESCR.
A - D	2x4	DRY	No.2	SPF
D - E	2x4	DRY	No.2	SPF
F - E	2x4	DRY	No.2	SPF
I - B	2x4	DRY	No.2	SPF
I - H	2x4	DRY	No.2	SPF
G - C	2x4	DRY	No.2	SPF
G - F	2x4	DRY	No.2	SPF
ALL WEBS	2x3	DRY	No.2	SPF
EXCEPT				
H - F	2x4	DRY	No.2	SPF

DRY: SEASONED LUMBER.

PLATES (table is in inches)

JT	TYPE	PLATES	W	LEN	Y	X
B	TMVW-t	MT20	4.0	4.0	2.00	1.00
C	TMV+p	MT20	3.0	4.0		
D	TTWW+m	MT20	4.0	4.0		
E	TMV+p	MT20	3.0	4.0		
F	BMVWW1-t	MT20	4.0	10.0	2.00	Edge
G	BMV+p	MT20	3.0	4.0		
H	BVMWWW-l	MT20	5.0	8.0	2.50	2.50
I	BMV1+p	MT20	3.0	4.0		

Edge - INDICATES REFERENCE CORNER OF PLATE TOUCHES EDGE OF CHORD.

NOTES- (1)
1) Lateral braces to be a minimum of 2X4 SPF #2.

DIMENSIONS, SUPPORTS AND LOADINGS SPECIFIED BY FABRICATOR TO BE VERIFIED BY BUILDING DESIGNER

BEARINGS

JT	FACTORED GROSS REACTION VERT	HORZ	MAXIMUM FACTORED GROSS REACTION DOWN	HORZ	UPLIFT	INPUT BRG IN-SX	REQRD BRG IN-SX
F	360	0	360	0	0	MECHANICAL	
I	514	0	514	0	0	5-8	5-8

A SUITABLE HANGER/MECHANICAL CONNECTION IS REQUIRED AT JOINT F. MINIMUM BEARING LENGTH AT JOINT F = 1-8.

UNFACTORED REACTIONS

JT	1ST LCASE COMBINED	MAX./MIN. COMPONENT REACTIONS SNOW	LIVE	PERM.LIVE	WIND	DEAD	SOIL
F	252	179 / 0	0 / 0	0 / 0	0 / 0	74 / 0	0 / 0
I	358	268 / 0	0 / 0	0 / 0	0 / 0	90 / 0	0 / 0

BEARING MATERIAL TO BE SPF NO.2 OR BETTER AT JOINT(S) I

BRACING
TOP CHORD TO BE SHEATHED OR MAX. PURLIN SPACING = 6.25 FT.
MAX. UNBRACED BOTTOM CHORD LENGTH = 7.81 FT OR RIGID CEILING DIRECTLY APPLIED.

ALL PITCH BREAKS AND PERIMETER CORNER JOINTS MUST BE LATERALLY RESTRAINED.

LOADING
TOTAL LOAD CASES: (4)

CHORDS

MEMB. FR-TO	MAX. FORCE (LBS)	FACTORED VERT. LOAD (PLF) FROM	TO	LC1 MAX CSI (LC)	MAX. UNBRAC LENGTH
A- B	0 / 43	-112.4	-112.4	0.15 (1)	10.00
B- C	-242 / 0	-112.4	-112.4	0.09 (1)	6.25
C- D	-258 / 0	-112.4	-112.4	0.07 (1)	6.25
D- E	0 / 0	-112.4	-112.4	0.05 (1)	10.00
F- E	-89 / 0	0.0	0.0	0.05 (1)	7.81
I- B	-490 / 0	0.0	0.0	0.05 (1)	7.81
I- H	0 / 0	-18.5	-18.5	0.04 (4)	10.00
G- H	0 / 30	0.0	0.0	0.02 (1)	10.00
H- C	-270 / 0	0.0	0.0	0.02 (1)	7.81
G- F	0 / 8	-18.5	-18.5	0.05 (4)	10.00

WEBS

MEMB. FR-TO	MAX. FORCE (LBS)	MAX CSI (LC)
H- F	0 / 94	0.02 (1)
H- D	0 / 316	0.07 (1)
D- F	-307 / 0	0.16 (1)
B- H	0 / 224	0.05 (1)

DESIGN CRITERIA

SPECIFIED LOADS:

TOP CH.	LL	=	32.5	PSF
	DL	=	6.0	PSF
BOT CH.	LL	=	0.0	PSF
	DL	=	7.4	PSF
TOTAL LOAD		=	45.9	PSF

SPACING = 24.0 IN. C/C

LOADING IN FLAT SECTION BASED ON A SLOPE OF 6.00/12

THIS TRUSS IS DESIGNED FOR RESIDENTIAL OR SMALL BUILDING REQUIREMENTS OF PART 9, NBCC 2015

THIS DESIGN COMPLIES WITH:
- PART 9 OF BCBC 2018 , ABC 2019
- PART 9 OF OBC 2012 (2019 AMENDMENT)
- CSA 086-14
- TPIC 2014

(55 % OF 43.9 P.S.F. G.S.L. PLUS 8.4 P.S.F. RAIN LOAD) EQUALS 32.5 P.S.F. SPECIFIED ROOF LIVE LOAD

ALLOWABLE DEFL.(LL)= L/360 (0.19")
CALCULATED VERT. DEFL.(LL) = L/ 999 (0.00")
ALLOWABLE DEFL.(TL)= L/360 (0.19")
CALCULATED VERT. DEFL.(TL) = L/ 999 (0.01")

CSI: TC=0.15/1.00 (A-B:1) , BC=0.05/1.00 (F-G:4) , WB=0.16/1.00 (D-F:1) , SSI=0.11/1.00 (B-C:1)

DOL LUMBER=1.00 NAIL=1.00 LS BEND=1.10 COMP=1.10 SHEAR=1.10 TENS= 1.10

COMPANION LIVE LOAD FACTOR = 1.00

AUTOSOLVE RIGHT HEEL ONLY

TRUSS PLATE MANUFACTURER IS NOT RESPONSIBLE FOR QUALITY CONTROL IN THE TRUSS MANUFACTURING PLANT .

NAIL VALUES

PLATE	GRIP(DRY) (PSI) MAX	MIN	SHEAR (PLI) MAX	MIN	SECTION (PLI) MAX	MIN
MT20	650	371	1747	788	1987	1873

PLATE PLACEMENT TOL. = 0.250 inches

PLATE ROTATION TOL. = 5.0 Deg.

JSI GRIP= 0.47 (H) (INPUT = 0.90)
JSI METAL= 0.14 (B) (INPUT = 1.00)

LICENSED PROFESSIONAL ENGINEER
06-24-22
H. J. G. ALVES
100009024
PROVINCE OF ONTARIO

Structural component only
DWG# T-2215330

REVIEWED

JOB NAME	TRUSS NAME	QUANTITY	PLY	JOB DESC.	DRWG NO.
423616	T43S	1	1	BAYVIEW WELLINGTON TRUSS DESC.	

Tamarack Roof Truss, Burlington

Version 8.530 S Feb 23 2022 MiTek Industries, Inc. Fri Jun 24 14:55:13 2022 Page 1
ID:c3jyj23uDijq_8pvRKbkZpy75XW-hrTLTTevds9flp_Cm3QZcem8JQVZr8QwtizNQFz32fi

Scale = 1:39.5

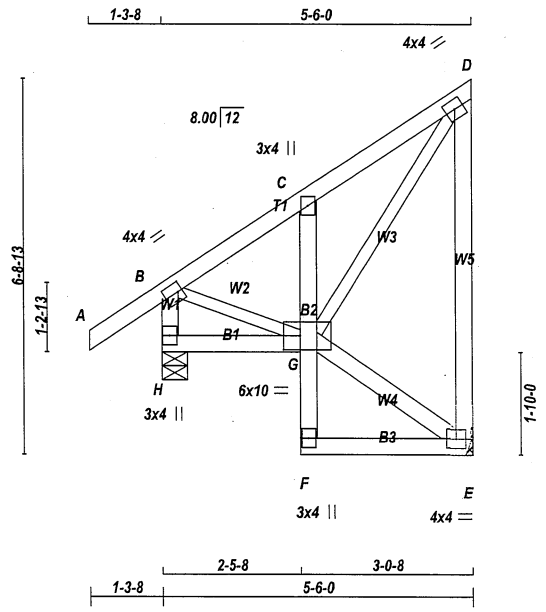

TOTAL WEIGHT = 38 lb

LUMBER
N. L. G. A. RULES

CHORDS	SIZE		LUMBER	DESCR.
H - B	2x4	DRY	No.2	SPF
A - D	2x4	DRY	No.2	SPF
E - D	2x4	DRY	No.2	SPF
H - G	2x4	DRY	No.2	SPF
F - C	2x4	DRY	No.2	SPF
F - E	2x4	DRY	No.2	SPF
ALL WEBS	2x3	DRY	No.2	SPF
EXCEPT				
G - E	2x4	DRY	No.2	SPF

DRY: SEASONED LUMBER.

PLATES (table is in inches)

JT	TYPE	PLATES	W	LEN	Y	X
B	TMVW-t	MT20	4.0	4.0	2.00	1.00
C	TMV+p	MT20	3.0	4.0		
D	TMVW-t	MT20	4.0	4.0		
E	BMVW1-t	MT20	4.0	4.0		
F	BMV+p	MT20	3.0	4.0		
G	BVMWWW-I	MT20	6.0	10.0	3.00	3.50
H	BMV1+p	MT20	3.0	4.0		

NOTES- (1)
1) Lateral braces to be a minimum of 2X4 SPF #2.

DIMENSIONS, SUPPORTS AND LOADINGS SPECIFIED BY FABRICATOR TO BE VERIFIED BY BUILDING DESIGNER

BEARINGS

JT	FACTORED GROSS REACTION VERT	HORZ	MAXIMUM FACTORED GROSS REACTION DOWN	HORZ	UPLIFT	INPUT BRG IN-SX	REQRD BRG IN-SX
H	514	0	514	0	0	5-8	5-8
E	360	0	360	0	0	MECHANICAL	

A SUITABLE HANGER/MECHANICAL CONNECTION IS REQUIRED AT JOINT E. MINIMUM BEARING LENGTH AT JOINT E = 1-8.

UNFACTORED REACTIONS

JT	1ST LCASE COMBINED	MAX./MIN. COMPONENT REACTIONS SNOW	LIVE	PERM.LIVE	WIND	DEAD	SOIL
H	358	268 / 0	0 / 0	0 / 0	0 / 0	90 / 0	0 / 0
E	252	179 / 0	0 / 0	0 / 0	0 / 0	74 / 0	0 / 0

BEARING MATERIAL TO BE SPF NO.2 OR BETTER AT JOINT(S) H

BRACING
TOP CHORD TO BE SHEATHED OR MAX. PURLIN SPACING = 6.25 FT.
MAX. UNBRACED BOTTOM CHORD LENGTH = 7.81 FT OR RIGID CEILING DIRECTLY APPLIED.

ALL PITCH BREAKS AND PERIMETER CORNER JOINTS MUST BE LATERALLY RESTRAINED.

LOADING
TOTAL LOAD CASES: (4)

CHORDS

MEMB. FR-TO	MAX. FACTORED FORCE (LBS)	FACTORED VERT. LOAD LC1 (PLF) FROM	TO	MAX CSI (LC)	MAX. UNBRAC LENGTH
H- B	-490 / 0	0.0	0.0	0.05 (1)	7.81
A- B	0 / 43	-112.4	-112.4	0.15 (1)	10.00
B- C	-253 / 0	-112.4	-112.4	0.13 (1)	6.25
C- D	-271 / 0	-112.4	-112.4	0.13 (1)	6.25
E- D	-328 / 0	0.0	0.0	0.31 (1)	7.81
H- G	0 / 0	-18.5	-18.5	0.04 (4)	10.00
F- G	0 / 30	0.0	0.0	0.03 (1)	10.00
G- C	-368 / 0	0.0	0.0	0.03 (1)	7.81
F- E	0 / 9	-18.5	-18.5	0.05 (4)	10.00

WEBS

MEMB. FR-TO	MAX. FACTORED FORCE (LBS)	MAX CSI (LC)
B- G	0 / 242	0.05 (1)
G- E	-11 / 0	0.00 (1)
G- D	0 / 393	0.09 (1)

DESIGN CRITERIA

SPECIFIED LOADS:

TOP CH.	LL	=	32.5	PSF
	DL	=	6.0	PSF
BOT CH.	LL	=	0.0	PSF
	DL	=	7.4	PSF
TOTAL LOAD		=	45.9	PSF

SPACING = 24.0 IN. C/C

THIS TRUSS IS DESIGNED FOR RESIDENTIAL OR SMALL BUILDING REQUIREMENTS OF PART 9, NBCC 2015

THIS DESIGN COMPLIES WITH:
- PART 9 OF BCBC 2018 , ABC 2019
- PART 9 OF OBC 2012 (2019 AMENDMENT)
- CSA 086-14
- TPIC 2014

(55 % OF 43.9 P.S.F. G.S.L. PLUS 8.4 P.S.F. RAIN LOAD) EQUALS 32.5 P.S.F. SPECIFIED ROOF LIVE LOAD

ALLOWABLE DEFL.(LL)= L/360 (0.19")
CALCULATED VERT. DEFL.(LL) = L/ 999 (0.01")
ALLOWABLE DEFL.(TL)= L/360 (0.19")
CALCULATED VERT. DEFL.(TL) = L/ 999 (0.01")

CSI: TC=0.31/1.00 (D-E:1) , BC=0.05/1.00 (E-F:4) , WB=0.09/1.00 (D-G:1) , SSI=0.13/1.00 (C-D:1)

DOL LUMBER=1.00 NAIL=1.00 LS BEND=1.10 COMP=1.10 SHEAR=1.10 TENS= 1.10

COMPANION LIVE LOAD FACTOR = 1.00

TRUSS PLATE MANUFACTURER IS NOT RESPONSIBLE FOR QUALITY CONTROL IN THE TRUSS MANUFACTURING PLANT .

NAIL VALUES

PLATE	GRIP(DRY) (PSI) MAX	MIN	SHEAR (PLI) MAX	MIN	SECTION (PLI) MAX	MIN
MT20	650	371	1747	788	1987	1873

PLATE PLACEMENT TOL. = 0.250 inches

PLATE ROTATION TOL. = 5.0 Deg.

JSI GRIP= 0.62 (D) (INPUT = 0.90)
JSI METAL= 0.14 (B) (INPUT = 1.00)

LICENSED PROFESSIONAL ENGINEER
06-24-22
H. J. G. ALVES
100009024
PROVINCE OF ONTARIO

Structural component only
DWG# T-2215331

REVIEWED

JOB NAME	TRUSS NAME	QUANTITY	PLY	JOB DESC.	DRWG NO.
423616	T44	1	2	BAYVIEW WELLINGTON TRUSS DESC.	

Tamarack Roof Truss, Burlington

Version 8.530 S Feb 23 2022 MiTek Industries, Inc. Fri Jun 24 14:55:14 2022 Page 1
ID:c3jyj23uDijq_8pvRKbkZpy75XW-921jgpfYOAHWwzZOKmxo9sILrpjUaWN35Mjxyhz32fh

Scale = 1:25.4

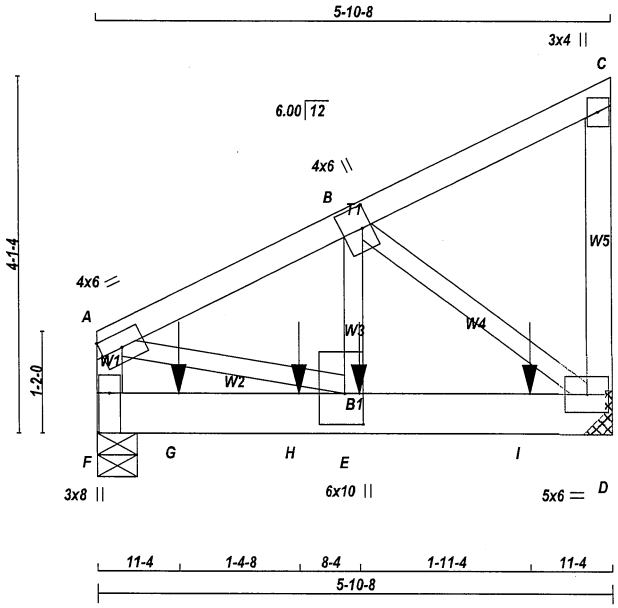

TOTAL WEIGHT = 2 X 29 = 58 lb

LUMBER

N. L. G. A. RULES

CHORDS	SIZE		LUMBER	DESCR.
F - A	2x4	DRY	No.2	SPF
A - C	2x4	DRY	No.2	SPF
D - C	2x4	DRY	No.2	SPF
F - D	2x6	DRY	No.2	SPF
ALL WEBS	2x3	DRY	No.2	SPF

DRY: SEASONED LUMBER.

DESIGN CONSISTS OF 2 TRUSSES BUILT SEPARATELY THEN FASTENED TOGETHER AS FOLLOWS:

CHORDS	#ROWS	SURFACE SPACING (IN)	LOAD(PLF)
TOP CHORDS : (0.122"X3") SPIRAL NAILS			
F- A	1	12	TOP
A- C	1	12	TOP
C- D	1	12	TOP
BOTTOM CHORDS : (0.122"X3") SPIRAL NAILS			
F- D	2	6	SIDE(427.3)
WEBS : (0.122"X3") SPIRAL NAILS			
B- E	1	2	SIDE(394.5)
2x3	1	6	

NAILS TO BE DRIVEN FROM ONE SIDE ONLY.

GIRDER NAILING ASSUMES NAILED HANGERS ARE FASTENED WITH MIN. 3-0 INCH NAILS.

TOP - COMPONENTS ARE LOADED FROM THE TOP AND MUST BE PLACED ON TOP EDGE OF ALL PLIES FOR THE LOAD TO BE TRANSFERRED TO EACH PLY.

SIDE - PLF SHOWN IS THE EQUIVALENT UDL APPLIED TO ONE SIDE THAT THE CORRESPONDING NAILING PATTERN SHALL BE CAPABLE OF TRANSFERING. REMAINING PLF MUST BE APPLIED ON THE OPPOSITE SIDE OR ON THE TOP.

PLATES (table is in inches)

JT	TYPE	PLATES	W	LEN	Y	X
A	TMVW-t	MT20	4.0	6.0		Edge
B	TMWW+t	MT20	4.0	6.0	3.00	1.25
C	TMV+p	MT20	3.0	4.0		

LICENSED PROFESSIONAL ENGINEER
06-24-22
H. J. G. ALVES
100009024
PROVINCE OF ONTARIO

Structural component only
DWG# T-2215332

DIMENSIONS, SUPPORTS AND LOADINGS SPECIFIED BY FABRICATOR TO BE VERIFIED BY BUILDING DESIGNER

BEARINGS

JT	FACTORED GROSS REACTION VERT	HORZ	MAXIMUM FACTORED GROSS REACTION DOWN	HORZ	UPLIFT	INPUT BRG IN-SX	REQRD BRG IN-SX
F	2582	0	2582	0	0	5-8	5-8
D	3286	0	3286	0	0	MECHANICAL	

A SUITABLE HANGER/MECHANICAL CONNECTION IS REQUIRED AT JOINT D. MINIMUM BEARING LENGTH AT JOINT D = 4-0.

UNFACTORED REACTIONS

JT	1ST LCASE COMBINED	MAX./MIN. COMPONENT REACTIONS SNOW	LIVE	PERM.LIVE	WIND	DEAD	SOIL
F	1801	1321 / 0	0 / 0	0 / 0	0 / 0	480 / 0	0 / 0
D	2293	1682 / 0	0 / 0	0 / 0	0 / 0	611 / 0	0 / 0

BEARING MATERIAL TO BE SPF NO.2 OR BETTER AT JOINT(S) F

BRACING

TOP CHORD TO BE SHEATHED OR MAX. PURLIN SPACING = 5.12 FT.
MAX. UNBRACED BOTTOM CHORD LENGTH = 10.00 FT OR RIGID CEILING DIRECTLY APPLIED.

ALL PITCH BREAKS AND PERIMETER CORNER JOINTS MUST BE LATERALLY RESTRAINED.

LOADING

TOTAL LOAD CASES: (4)

CHORDS

MEMB. FR-TO	MAX. FACTORED FORCE (LBS)	FACTORED VERT. LOAD (PLF) FROM	TO	LC1 CSI (LC)	MAX UNBRAC LENGTH
F- A	-2323 / 0	0.0	0.0	0.13 (1)	7.35
A- B	-3178 / 0	-112.4	-112.4	0.11 (1)	5.12
B- C	-8 / 0	-112.4	-112.4	0.07 (1)	10.00
D- C	-147 / 0	0.0	0.0	0.02 (1)	7.81
F- G	0 / 0	-18.5	-18.5	0.09 (1)	10.00
G- H	0 / 0	-18.5	-18.5	0.09 (1)	10.00
H- E	0 / 0	-18.5	-18.5	0.09 (1)	10.00
E- I	0 / 2850	-18.5	-18.5	0.51 (1)	10.00
I- D	0 / 2850	-18.5	-18.5	0.51 (1)	10.00

WEBS

MEMB. FR-TO	MAX. FACTORED FORCE (LBS)	MAX CSI (LC)
A- E	0 / 2948	0.36 (1)
E- B	0 / 3235	0.40 (1)
B- D	-3586 / 0	0.43 (1)

SPECIFIED CONCENTRATED LOADS (LBS)

JT	LOC.	LC1	MAX-	MAX+	FACE	DIR.	TYPE	HEEL	CONN.
E	3-0-0	-2196	-2196	---	FRONT	VERT	TOTAL	---	C1
G	11-4	-170	-170	---	FRONT	VERT	TOTAL	---	C1
H	2-3-12	-226	-226	---	FRONT	VERT	TOTAL	---	C1
I	4-11-4	-963	-963	---	FRONT	VERT	TOTAL	---	C1

CONNECTION REQUIREMENTS

1) **C1:** A SUITABLE HANGER/MECHANICAL CONNECTION IS REQUIRED.

DESIGN CRITERIA

SPECIFIED LOADS:

TOP CH.	LL	=	32.5	PSF
	DL	=	6.0	PSF
BOT CH.	LL	=	0.0	PSF
	DL	=	7.4	PSF
TOTAL LOAD		=	45.9	PSF

SPACING = 24.0 IN. C/C

THIS TRUSS IS DESIGNED FOR RESIDENTIAL OR SMALL BUILDING REQUIREMENTS OF PART 9, NBCC 2015

THIS DESIGN COMPLIES WITH:
- PART 9 OF BCBC 2018 , ABC 2019
- PART 9 OF OBC 2012 (2019 AMENDMENT)
- CSA 086-14
- TPIC 2014

(55 % OF 43.9 P.S.F. G.S.L. PLUS 8.4 P.S.F. RAIN LOAD) EQUALS 32.5 P.S.F. SPECIFIED ROOF LIVE LOAD

ALLOWABLE DEFL.(LL)= L/360 (0.20")
CALCULATED VERT. DEFL.(LL) = L/ 999 (0.02")
ALLOWABLE DEFL.(TL)= L/360 (0.20")
CALCULATED VERT. DEFL.(TL) = L/ 999 (0.03")

CSI: TC=0.13/1.00 (A-F:1) , BC=0.51/1.00 (D-E:1) , WB=0.43/1.00 (B-D:1) , SSI=0.32/1.00 (D-E:1)

DOL LUMBER=1.00 NAIL=1.00 LS BEND=1.00 COMP=1.00 SHEAR=1.00 TENS= 1.00

COMPANION LIVE LOAD FACTOR = 1.00

TRUSS PLATE MANUFACTURER IS NOT RESPONSIBLE FOR QUALITY CONTROL IN THE TRUSS MANUFACTURING PLANT .

NAIL VALUES

PLATE	GRIP(DRY) (PSI) MAX	MIN	SHEAR (PLI) MAX	MIN	SECTION (PLI) MAX	MIN
MT20	650	371	1747	788	1987	1873

PLATE PLACEMENT TOL. = 0.250 inches

PLATE ROTATION TOL. = 5.0 Deg.

JSI GRIP= 0.90 (B) (INPUT = 0.90)
JSI METAL= 0.66 (B) (INPUT = 1.00)

CONTINUED ON PAGE 2

REVIEWED

JOB NAME	TRUSS NAME	QUANTITY	PLY	JOB DESC.	DRWG NO.
423616	T44	1	2	BAYVIEW WELLINGTON TRUSS DESC.	

PLATES (table is in inches)

JT	TYPE	PLATES	W	LEN	Y	X
D	BMVW1-t	MT20	5.0	6.0		
E	BMWW+t	MT20	6.0	10.0	4.25	2.50
F	BMV1+p	MT20	3.0	8.0	Edge	1.50

Edge - INDICATES REFERENCE CORNER OF PLATE TOUCHES EDGE OF CHORD.

NOTES- (1)
1) Lateral braces to be a minimum of 2X4 SPF #2.

LICENSED PROFESSIONAL ENGINEER
06-24-22
H. J. G. ALVES
100009024
PROVINCE OF ONTARIO

Structural component only
DWG# T-2215332

REVIEWED

JOB NAME	TRUSS NAME	QUANTITY	PLY	JOB DESC.	DRWG NO.
423615	T200	1	1	BAYVIEW WELLINGTON TRUSS DESC.	

Tamarack Roof Truss, Burlington

Version 8.530 S Feb 23 2022 MiTek Industries, Inc. Fri Jun 24 16:24:44 2022 Page 1
ID:c3jyj23uDijq_8pvRKbkZpy75XW-w8Voj?eyl6raAD5TvZH4oHjyaVXXn8bUwqX5QRz31Ln

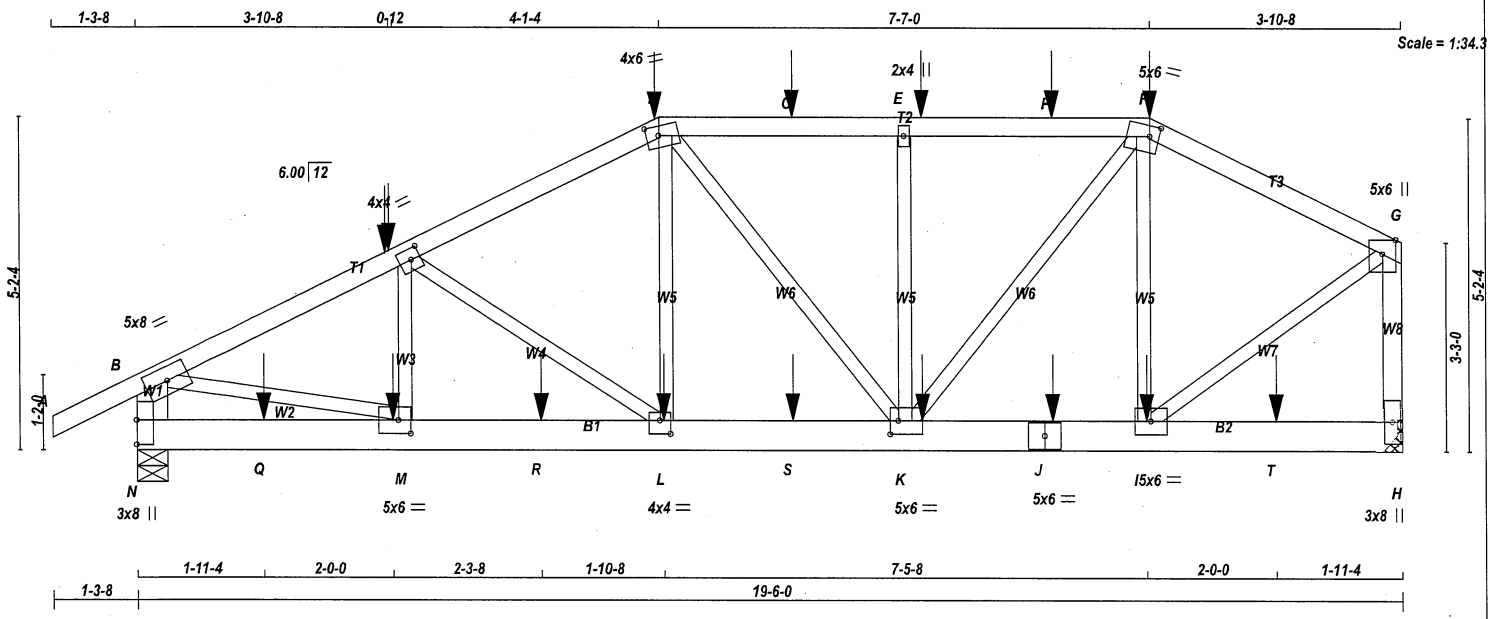

TOTAL WEIGHT = 97 lb

LUMBER
N. L. G. A. RULES

CHORDS	SIZE		LUMBER	DESCR.
A - D	2x4	DRY	No.2	SPF
D - F	2x4	DRY	No.2	SPF
F - G	2x4	DRY	No.2	SPF
N - B	2x6	DRY	No.2	SPF
H - G	2x4	DRY	No.2	SPF
N - J	2x6	DRY	No.2	SPF
J - H	2x6	DRY	No.2	SPF
ALL WEBS EXCEPT	2x3	DRY	No.2	SPF

DRY: SEASONED LUMBER.

PLATES (table is in inches)

JT	TYPE	PLATES	W	LEN	Y	X
B	TMVW-t	MT20	5.0	8.0		
C	TMWW-t	MT20	4.0	4.0	2.00	1.75
D	TTWW-m	MT20	4.0	6.0	1.75	2.25
E	TMW+w	MT20	2.0	4.0		
F	TTWW-m	MT20	5.0	6.0	2.00	1.75
G	TMVW+p	MT20	5.0	6.0	Edge	
H	BMV1+p	MT20	3.0	8.0		
I	BMWW-t	MT20	5.0	6.0		
J	BS-t	MT20	5.0	6.0		
K	BMWWW-t	MT20	5.0	6.0	2.50	1.50
L	BMWW-t	MT20	4.0	4.0	2.50	2.00
M	BMWW-t	MT20	5.0	6.0	2.50	2.25
N	BMV1+p	MT20	3.0	8.0	4.50	

Edge - INDICATES REFERENCE CORNER OF PLATE TOUCHES EDGE OF CHORD.

NOTES- (1)
1) Lateral braces to be a minimum of 2X4 SPF #2.

LICENSED PROFESSIONAL ENGINEER
06-24-22
H. J. G. ALVES
100009024
PROVINCE OF ONTARIO

Structural component only
DWG# T-2215340

DIMENSIONS, SUPPORTS AND LOADINGS SPECIFIED BY FABRICATOR TO BE VERIFIED BY BUILDING DESIGNER

BEARINGS

JT	FACTORED GROSS REACTION VERT	HORZ	MAXIMUM FACTORED GROSS REACTION DOWN	HORZ	UPLIFT	INPUT BRG IN-SX	REQRD BRG IN-SX
N	2130	0	2130	0	0	5-8	5-8
H	1942	0	1942	0	0	MECHANICAL	

A SUITABLE HANGER/MECHANICAL CONNECTION IS REQUIRED AT JOINT H. MINIMUM BEARING LENGTH AT JOINT H = 3-8.

UNFACTORED REACTIONS

JT	1ST LCASE COMBINED	MAX./MIN. COMPONENT REACTIONS SNOW	LIVE	PERM.LIVE	WIND	DEAD	SOIL
N	1491	1064 / 0	0 / 0	0 / 0	0 / 0	427 / 0	0 / 0
H	1361	960 / 0	0 / 0	0 / 0	0 / 0	402 / 0	0 / 0

BEARING MATERIAL TO BE SPF NO.2 OR BETTER AT JOINT(S) N

BRACING
TOP CHORD TO BE SHEATHED OR MAX. PURLIN SPACING = 3.70 FT.
MAX. UNBRACED BOTTOM CHORD LENGTH = 10.00 FT OR RIGID CEILING DIRECTLY APPLIED.

ALL PITCH BREAKS AND PERIMETER CORNER JOINTS MUST BE LATERALLY RESTRAINED.

LOADING
TOTAL LOAD CASES: (4)

CHORDS

MEMB. FR-TO	MAX. FACTORED FORCE (LBS)	FACTORED VERT. LOAD LC1 (PLF) FROM	TO	MAX CSI (LC)	MAX. UNBRAC LENGTH
A- B	0 / 34	-112.4	-112.4	0.16 (1)	10.00
B- C	-2783 / 0	-112.4	-112.4	0.44 (1)	3.70
C- D	-2344 / 0	-112.4	-112.4	0.40 (1)	4.03
D- O	-2042 / 0	-112.4	-112.4	0.45 (1)	4.16
O- E	-2042 / 0	-112.4	-112.4	0.45 (1)	4.16
E- P	-2042 / 0	-112.4	-112.4	0.45 (1)	4.16
P- F	-2042 / 0	-112.4	-112.4	0.45 (1)	4.16
F- G	-1550 / 0	-112.4	-112.4	0.37 (1)	4.82
N- B	-2062 / 0	0.0	0.0	0.15 (1)	7.02
H- G	-1908 / 0	0.0	0.0	0.33 (1)	6.03
N- Q	0 / 0	-18.5	-18.5	0.08 (1)	10.00
Q- M	0 / 0	-18.5	-18.5	0.08 (1)	10.00
M- R	0 / 2508	-18.5	-18.5	0.40 (1)	10.00
R- L	0 / 2508	-18.5	-18.5	0.40 (1)	10.00
L- S	0 / 2085	-18.5	-18.5	0.32 (1)	10.00
S- K	0 / 2085	-18.5	-18.5	0.32 (1)	10.00
K- J	0 / 1366	-18.5	-18.5	0.22 (1)	10.00
J- I	0 / 1366	-18.5	-18.5	0.22 (1)	10.00
I- T	0 / 0	-18.5	-18.5	0.05 (4)	10.00
T- H	0 / 0	-18.5	-18.5	0.05 (4)	10.00

WEBS

MEMB. FR-TO	MAX. FACTORED FORCE (LBS)	MAX CSI (LC)
M- C	-273 / 17	0.05 (1)
C- L	-529 / 0	0.21 (1)
L- D	0 / 475	0.12 (1)
D- K	-70 / 0	0.04 (1)
K- E	-753 / 0	0.29 (1)
K- F	0 / 1090	0.27 (1)
I- F	-848 / 0	0.33 (1)
B- M	0 / 2551	0.63 (1)
I- G	0 / 1705	0.42 (1)

SPECIFIED CONCENTRATED LOADS (LBS)

JT	LOC.	LC1	MAX-	MAX+	FACE	DIR.	TYPE	HEEL	CONN.
C	3-10-8	-97	-97	---	BACK	VERT	TOTAL	---	C1
C	3-11-4	-69	-69	---	BACK	VERT	TOTAL	---	C1
D	8-0-8	-97	-97	---	FRONT	VERT	TOTAL	---	C1
D	8-0-8	-78	-78	---	BACK	VERT	TOTAL	---	C1
E	12-1-4	-72	-72	---	BACK	VERT	TOTAL	---	C1
F	15-7-8	-175	-175	---	BACK	VERT	TOTAL	---	C1
I	15-6-12	-14	-14	---	BACK	VERT	TOTAL	---	C1
J	14-1-4	-14	-14	---	BACK	VERT	TOTAL	---	C1
K	12-1-4	-14	-14	---	BACK	VERT	TOTAL	---	C1
L	8-1-4	-14	-14	---	BACK	VERT	TOTAL	---	C1
M	3-11-4	-122	-122	---	BACK	VERT	TOTAL	---	C1
O	10-1-4	-72	-72	---	BACK	VERT	TOTAL	---	C1
P	14-1-4	-72	-72	---	BACK	VERT	TOTAL	---	C1
Q	1-11-4	-7	-7	---	BACK	VERT	TOTAL	---	C1

[M]

DESIGN CRITERIA

*** SPECIAL LOADS ANALYSIS ***
GEOMETRY AND/OR BASIC LOADS CHANGED BY USER.
LOADS WERE DERIVED FROM USER INPUT
NO FURTHER MODIFICATIONS WERE MADE

SPECIFIED LOADS:

TOP	CH.	LL	=	32.5	PSF
		DL	=	6.0	PSF
BOT	CH.	LL	=	0.0	PSF
		DL	=	7.4	PSF
TOTAL	LOAD		=	45.9	PSF

SPACING = 24.0 IN. C/C

LOADING IN FLAT SECTION BASED ON A SLOPE OF 6.00/12

*** NON STANDARD GIRDER ***
ADDT'L USER-DEFINED LOADS APPLIED TO ALL LOAD CASES.

THIS TRUSS IS DESIGNED FOR RESIDENTIAL OR SMALL BUILDING REQUIREMENTS OF PART 9, NBCC 2015

THIS DESIGN COMPLIES WITH:
- PART 9 OF BCBC 2018 , ABC 2019
- PART 9 OF OBC 2012 (2019 AMENDMENT)
- CSA 086-14
- TPIC 2014

(55 % OF 43.9 P.S.F. G.S.L. PLUS 8.4 P.S.F. RAIN LOAD) EQUALS 32.5 P.S.F. SPECIFIED ROOF LIVE LOAD

ALLOWABLE DEFL.(LL)= L/360 (0.65")
CALCULATED VERT. DEFL.(LL) = L/ 999 (0.06")
ALLOWABLE DEFL.(TL)= L/360 (0.65")
CALCULATED VERT. DEFL.(TL) = L/ 999 (0.11")

CSI: TC=0.45/1.00 (E-F:1) , BC=0.40/1.00 (L-M:1) , WB=0.63/1.00 (B-M:1) , SSI=0.29/1.00 (D-E:1)

DOL LUMBER=1.00 NAIL=1.00 LS BEND=1.00 COMP=1.00 SHEAR=1.00 TENS= 1.00

COMPANION LIVE LOAD FACTOR = 1.00

AUTOSOLVE RIGHT HEEL ONLY

TRUSS PLATE MANUFACTURER IS NOT RESPONSIBLE FOR QUALITY CONTROL IN THE TRUSS MANUFACTURING PLANT .

NAIL VALUES

PLATE	GRIP(DRY) (PSI) MAX	MIN	SHEAR (PLI) MAX	MIN	SECTION (PLI) MAX	MIN
MT20	650	371	1747	788	1987	1873

PLATE PLACEMENT TOL. = 0.250 inches

PLATE ROTATION TOL. = 5.0 Deg.

JSI GRIP= 0.90 (L) (INPUT = 0.90)
JSI METAL= 0.61 (G) (INPUT = 1.00)

CONTINUED ON PAGE 2

REVIEWED

SPECIFIED CONCENTRATED LOADS (LBS)

JT	LOC.	LC1	MAX-	MAX+	FACE	DIR.	TYPE	HEEL	CONN.
R	6-2-12	-14	-14	---	BACK	VERT	TOTAL	---	C1
S	10-1-4	-14	-14	---	BACK	VERT	TOTAL	---	C1
T	17-6-12	-14	-14	---	BACK	VERT	TOTAL	---	C1

CONNECTION REQUIREMENTS

1) **C1:** A SUITABLE HANGER/MECHANICAL CONNECTION IS REQUIRED.

LICENSED PROFESSIONAL ENGINEER
06-24-22
H. J. G. ALVES
100009024
PROVINCE OF ONTARIO

Structural component only
DWG# T-2215340

REVIEWED

JOB NAME	TRUSS NAME	QUANTITY	PLY	JOB DESC.	DRWG NO.
423615	T201	1	2	BAYVIEW WELLINGTON TRUSS DESC.	

Tamarack Roof Truss, Burlington

Version 8.530 S Feb 23 2022 MiTek Industries, Inc. Fri Jun 24 16:24:45 2022 Page 1
ID:c3jyj23uDijq_8pvRKbkZpy75XW-OK3AwLfaWPzQnNgfTHoJLUF1CvqlWare9UHeztz31Lm

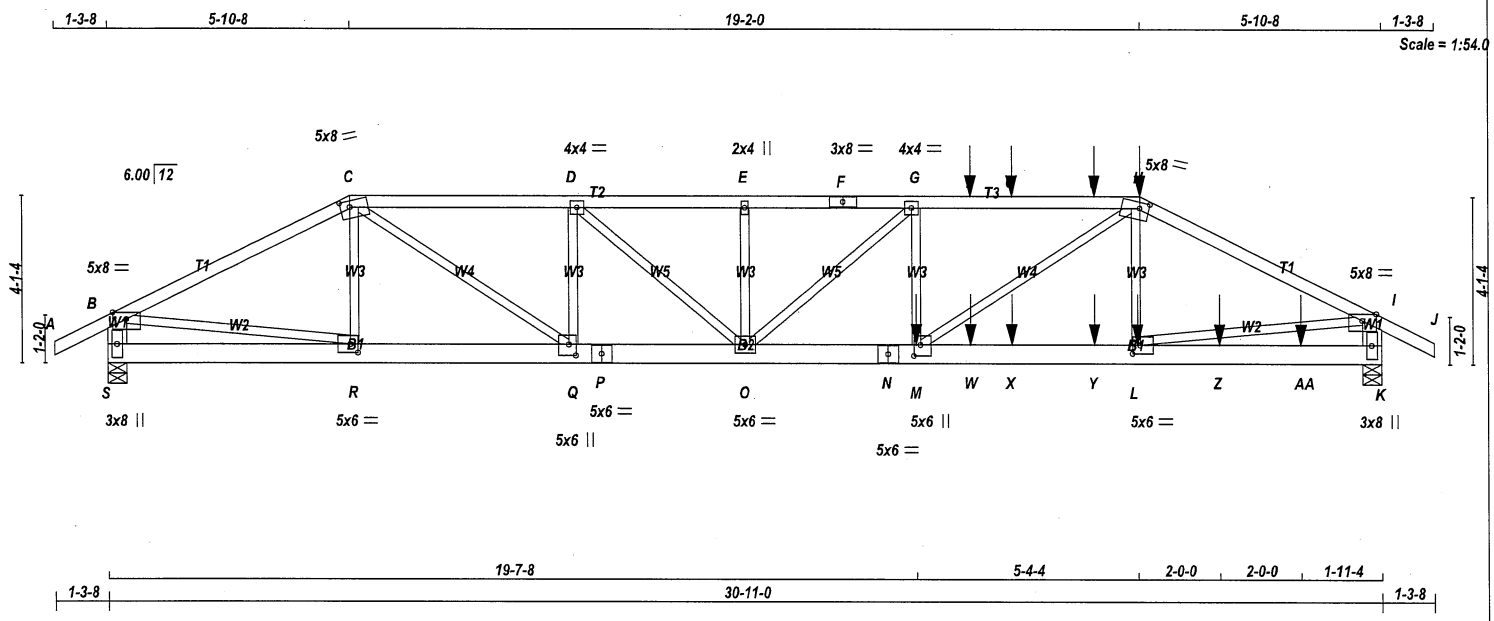

TOTAL WEIGHT = 2 X 139 = 278 lb

[M]

LUMBER

N. L. G. A. RULES

CHORDS	SIZE		LUMBER	DESCR.
A - C	2x4	DRY	No.2	SPF
C - F	2x4	DRY	No.2	SPF
F - H	2x4	DRY	No.2	SPF
H - J	2x4	DRY	No.2	SPF
S - B	2x6	DRY	No.2	SPF
K - I	2x6	DRY	No.2	SPF
S - P	2x6	DRY	No.2	SPF
P - N	2x6	DRY	No.2	SPF
N - K	2x6	DRY	No.2	SPF
ALL WEBS EXCEPT	2x3	DRY	No.2	SPF

DRY: SEASONED LUMBER.

DESIGN CONSISTS OF 2 TRUSSES BUILT SEPARATELY THEN FASTENED TOGETHER AS FOLLOWS:

CHORDS	#ROWS	SURFACE SPACING (IN)	LOAD(PLF)
TOP CHORDS : (0.122"X3") SPIRAL NAILS			
A- C	1	12	TOP
C- F	1	12	TOP
F- H	1	12	SIDE(61.0)
H- J	1	12	SIDE(61.0)
S- B	2	12	TOP
K- I	2	12	TOP
BOTTOM CHORDS : (0.122"X3") SPIRAL NAILS			
S- P	2	12	TOP
P- N	2	12	SIDE(0.1)
N- K	2	12	SIDE(183.1)
WEBS : (0.122"X3") SPIRAL NAILS			
2x3	1	6	
G- M	1	6	SIDE(275.6)

NAILS TO BE DRIVEN FROM ONE SIDE ONLY.

GIRDER NAILING ASSUMES NAILED HANGERS ARE FASTENED WITH MIN. 3-0 INCH NAILS.

TOP - COMPONENTS ARE LOADED FROM THE TOP AND MUST BE PLACED ON TOP EDGE OF ALL PLIES FOR THE LOAD TO BE TRANSFERRED TO EACH PLY.

LICENSED PROFESSIONAL ENGINEER
06-24-22
H. J. G. ALVES
100009024
PROVINCE OF ONTARIO

Structural component only
DWG# T-2215341

DIMENSIONS, SUPPORTS AND LOADINGS SPECIFIED BY FABRICATOR TO BE VERIFIED BY BUILDING DESIGNER

BEARINGS

JT	FACTORED GROSS REACTION VERT	HORZ	MAXIMUM FACTORED GROSS REACTION DOWN	HORZ	UPLIFT	INPUT BRG IN-SX	REQRD BRG IN-SX
S	3049	0	3049	0	0	5-8	5-8
K	4072	0	4072	0	0	5-8	5-8

UNFACTORED REACTIONS

JT	1ST LCASE COMBINED	SNOW	LIVE	PERM.LIVE	WIND	DEAD	SOIL
		MAX./MIN. COMPONENT REACTIONS					
S	2133	1532 / 0	0 / 0	0 / 0	0 / 0	601 / 0	0 / 0
K	2851	2031 / 0	0 / 0	0 / 0	0 / 0	821 / 0	0 / 0

BEARING MATERIAL TO BE SPF NO.2 OR BETTER AT JOINT(S) S, K

BRACING

TOP CHORD TO BE SHEATHED OR MAX. PURLIN SPACING = 2.66 FT.
MAX. UNBRACED BOTTOM CHORD LENGTH = 10.00 FT OR RIGID CEILING DIRECTLY APPLIED.

ALL PITCH BREAKS AND PERIMETER CORNER JOINTS MUST BE LATERALLY RESTRAINED.

LOADING

TOTAL LOAD CASES: (4)

CHORDS

MEMB. FR-TO	MAX. FACTORED FORCE (LBS)	FACTORED VERT. LOAD (PLF) FROM	TO	LC1	MAX CSI (LC)	MAX. UNBRAC LENGTH
A- B	0 / 34	-112.4	-112.4	0.08	(1)	10.00
B- C	-4455 / 0	-112.4	-112.4	0.56	(1)	4.01
C- D	-6590 / 0	-112.4	-112.4	0.47	(1)	3.47
D- E	-7786 / 0	-112.4	-112.4	0.49	(1)	3.14
E- F	-7786 / 0	-112.4	-112.4	0.63	(1)	2.94
F- G	-7786 / 0	-112.4	-112.4	0.63	(1)	2.94
G- T	-8556 / 0	-112.4	-112.4	0.84	(1)	2.66
T- U	-8556 / 0	-112.4	-112.4	0.84	(1)	2.66
U- V	-8556 / 0	-112.4	-112.4	0.84	(1)	2.66
V- H	-8556 / 0	-112.4	-112.4	0.84	(1)	2.66
H- I	-6231 / 0	-112.4	-112.4	0.71	(1)	3.36
I- J	0 / 34	-112.4	-112.4	0.08	(1)	10.00
S- B	-2996 / 0	0.0	0.0	0.11	(1)	7.81
K- I	-3997 / 0	0.0	0.0	0.14	(1)	7.11
S- R	0 / 0	-18.5	-18.5	0.04	(4)	10.00
R- Q	0 / 3972	-18.5	-18.5	0.30	(1)	10.00
Q- P	0 / 6590	-18.5	-18.5	0.48	(1)	10.00
P- O	0 / 6590	-18.5	-18.5	0.48	(1)	10.00
O- N	0 / 8556	-18.5	-18.5	0.63	(1)	10.00
N- M	0 / 8556	-18.5	-18.5	0.63	(1)	10.00
M- W	0 / 5557	-18.5	-18.5	0.44	(1)	10.00
W- X	0 / 5557	-18.5	-18.5	0.44	(1)	10.00
X- Y	0 / 5557	-18.5	-18.5	0.44	(1)	10.00
Y- L	0 / 5557	-18.5	-18.5	0.44	(1)	10.00
L- Z	0 / 0	-18.5	-18.5	0.06	(4)	10.00
Z-AA	0 / 0	-18.5	-18.5	0.06	(4)	10.00
AA- K	0 / 0	-18.5	-18.5	0.06	(4)	10.00

WEBS

MEMB. FR-TO	MAX. FACTORED FORCE (LBS)	MAX CSI (LC)
R- C	-393 / 0	0.05 (1)
Q- D	-1721 / 0	0.22 (1)
D- O	0 / 1605	0.20 (1)
E- O	-293 / 0	0.04 (1)
O- G	-1034 / 0	0.27 (1)
M- G	-234 / 44	0.03 (1)
M- H	0 / 3639	0.45 (1)
L- H	-478 / 53	0.06 (1)
B- R	0 / 4016	0.50 (1)
L- I	0 / 5616	0.70 (1)

SPECIFIED CONCENTRATED LOADS (LBS)

JT	LOC.	LC1	MAX-	MAX+	FACE	DIR.	TYPE	HEEL	CONN.
H	25-0-8	-308	-308	---	BACK	VERT	TOTAL	---	C1
L	24-11-12	-21	-21	---	BACK	VERT	TOTAL	---	C1
M	19-7-8	-1228	-1228	---	BACK	VERT	TOTAL	---	C1
T	20-11-4	-93	-93	---	BACK	VERT	TOTAL	---	C1
U	21-11-4	-93	-93	---	BACK	VERT	TOTAL	---	C1
V	23-11-4	-93	-93	---	BACK	VERT	TOTAL	---	C1
W	20-11-4	-21	-21	---	BACK	VERT	TOTAL	---	C1
X	21-11-4	-21	-21	---	BACK	VERT	TOTAL	---	C1
Y	23-11-4	-21	-21	---	BACK	VERT	TOTAL	---	C1
Z	26-11-12	-21	-21	---	BACK	VERT	TOTAL	---	C1
AA	28-11-12	-20	-20	---	BACK	VERT	TOTAL	---	C1

DESIGN CRITERIA

SPECIFIED LOADS:

TOP CH.	LL	=	32.5	PSF
	DL	=	6.0	PSF
BOT CH.	LL	=	0.0	PSF
	DL	=	7.4	PSF
TOTAL LOAD		=	45.9	PSF

SPACING = 24.0 IN. C/C

LOADING IN FLAT SECTION BASED ON A SLOPE OF 6.00/12

THIS TRUSS IS DESIGNED FOR RESIDENTIAL OR SMALL BUILDING REQUIREMENTS OF PART 9, NBCC 2015

THIS DESIGN COMPLIES WITH:
- PART 9 OF BCBC 2018 , ABC 2019
- PART 9 OF OBC 2012 (2019 AMENDMENT)
- CSA 086-14
- TPIC 2014

(55 % OF 43.9 P.S.F. G.S.L. PLUS 8.4 P.S.F. RAIN LOAD) EQUALS 32.5 P.S.F. SPECIFIED ROOF LIVE LOAD

ALLOWABLE DEFL.(LL)= L/360 (1.03")
CALCULATED VERT. DEFL.(LL) = L/ 999 (0.23")
ALLOWABLE DEFL.(TL)= L/360 (1.03")
CALCULATED VERT. DEFL.(TL) = L/ 948 (0.39")

CSI: TC=0.84/1.00 (G-H:1) , BC=0.63/1.00 (M-O:1) , WB=0.70/1.00 (I-L:1) , SSI=0.26/1.00 (G-H:1)

DOL LUMBER=1.00 NAIL=1.00 LS BEND=1.00 COMP=1.00 SHEAR=1.00 TENS= 1.00

COMPANION LIVE LOAD FACTOR = 1.00

AUTOSOLVE HEELS OFF

TRUSS PLATE MANUFACTURER IS NOT RESPONSIBLE FOR QUALITY CONTROL IN THE TRUSS MANUFACTURING PLANT .

NAIL VALUES

PLATE	GRIP(DRY) (PSI) MAX	MIN	SHEAR (PLI) MAX	MIN	SECTION (PLI) MAX	MIN
MT20	650	371	1747	788	1987	1873

PLATE PLACEMENT TOL. = 0.250 inches

PLATE ROTATION TOL. = 5.0 Deg.

JSI GRIP= 0.89 (L) (INPUT = 0.90)
JSI METAL= 0.81 (P) (INPUT = 1.00)

REVIEWED

CONTINUED ON PAGE 2

JOB NAME	TRUSS NAME	QUANTITY	PLY	JOB DESC. BAYVIEW WELLINGTON	DRWG NO.
423615	T201	1	2	TRUSS DESC.	

PLATES (table is in inches)

JT	TYPE	PLATES	W	LEN	Y	X
B	TMVW-p	MT20	5.0	8.0	Edge	
C	TTWW-m	MT20	5.0	8.0	1.75	2.75
D	TMWW-t	MT20	4.0	4.0		
E	TMW+w	MT20	2.0	4.0		
F	TS-t	MT20	3.0	8.0		
G	TMWW-t	MT20	4.0	4.0		
H	TTWW-m	MT20	5.0	8.0	1.75	2.75
I	TMVW-p	MT20	5.0	8.0	Edge	
K	BMV1+p	MT20	3.0	8.0		
L	BMWW-t	MT20	5.0	6.0	2.50	2.25
M	BMWW+t	MT20	5.0	6.0	3.25	2.00
N	BS-t	MT20	5.0	6.0		
O	BMWWW-t	MT20	5.0	6.0		
P	BS-t	MT20	5.0	6.0		
Q	BMWW+t	MT20	5.0	6.0	3.25	2.00
R	BMWW-t	MT20	5.0	6.0	2.50	2.25
S	BMV1+p	MT20	3.0	8.0		

Edge - INDICATES REFERENCE CORNER OF PLATE TOUCHES EDGE OF CHORD.

NOTES- (1)
1) Lateral braces to be a minimum of 2X4 SPF #2.

CONNECTION REQUIREMENTS

1) **C1:** A SUITABLE HANGER/MECHANICAL CONNECTION IS REQUIRED.

LICENSED PROFESSIONAL ENGINEER
06-24-22
H. J. G. ALVES
100009024
PROVINCE OF ONTARIO

Structural component only
DWG# T-2215341

REVIEWED

JOB NAME	TRUSS NAME	QUANTITY	PLY	JOB DESC.	DRWG NO.
423610	PB1	3	1	BAYVIEW WELLINGTON TRUSS DESC.	

Tamarack Roof Truss, Burlington

Version 8.530 S Feb 23 2022 MiTek Industries, Inc. Fri Jun 24 13:52:17 2022 Page 1
ID:c3jyj23uDijq_8pvRKbkZpy75XW-FPJszKyMthQQIWJJZ1g4aMNlyHIJ7OE7aEHau6z33ai

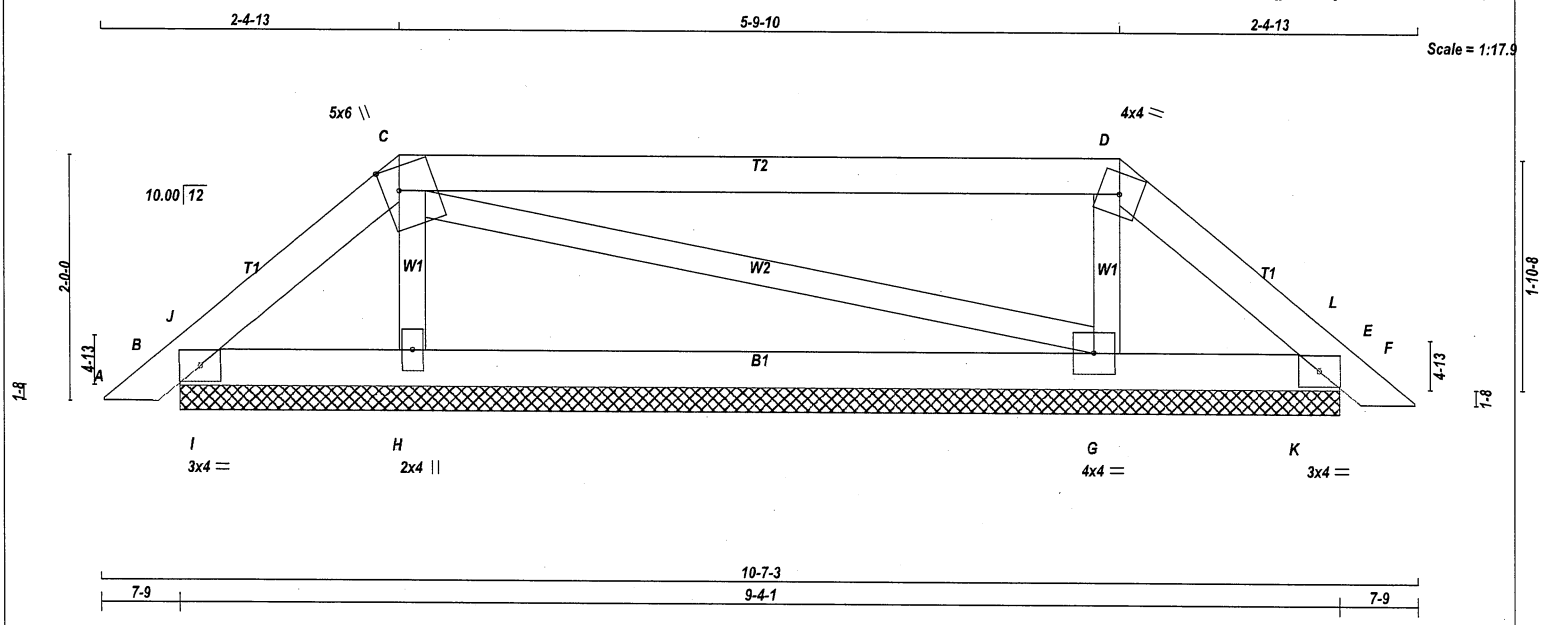

TOTAL WEIGHT = 3 X 31 = 93 lb

LUMBER
N. L. G. A. RULES

CHORDS	SIZE		LUMBER	DESCR.
A - C	2x4	DRY	No.2	SPF
C - D	2x4	DRY	No.2	SPF
D - F	2x4	DRY	No.2	SPF
B - E	2x4	DRY	No.2	SPF
ALL WEBS	2x3	DRY	No.2	SPF

DRY: SEASONED LUMBER.

PLATES (table is in inches)

JT	TYPE	PLATES	W	LEN	Y	X
B	TMB1-I	MT20	3.0	4.0		
C	TTWW+m	MT20	5.0	6.0	2.25	1.50
D	TTW-m	MT20	4.0	4.0		
E	TMB1-I	MT20	3.0	4.0		
G	BMWW1-t	MT20	4.0	4.0		
H	BMW1+w	MT20	2.0	4.0		

NOTES- (1)
1) Lateral braces to be a minimum of 2X4 SPF #2.

DIMENSIONS, SUPPORTS AND LOADINGS SPECIFIED BY FABRICATOR TO BE VERIFIED BY BUILDING DESIGNER

BEARINGS

JT	FACTORED GROSS REACTION VERT	HORZ	MAXIMUM FACTORED GROSS REACTION DOWN	HORZ	UPLIFT	INPUT BRG IN-SX	REQRD BRG IN-SX
B	222	0	222	0	0	9-4-1	9-4-1
E	211	0	211	0	0	9-4-1	9-4-1
H	445	0	445	0	0	9-4-1	9-4-1
G	463	0	463	0	0	9-4-1	9-4-1

UNFACTORED REACTIONS

JT	1ST LCASE COMBINED	MAX./MIN. COMPONENT REACTIONS SNOW	LIVE	PERM.LIVE	WIND	DEAD	SOIL
B	151	132 / 0	0 / 0	0 / 0	0 / 0	19 / 0	0 / 0
E	144	126 / 0	0 / 0	0 / 0	0 / 0	17 / 0	0 / 0
H	315	203 / 0	0 / 0	0 / 0	0 / 0	112 / 0	0 / 0
G	328	213 / 0	0 / 0	0 / 0	0 / 0	114 / 0	0 / 0

BEARING MATERIAL TO BE SPF NO.2 OR BETTER AT JOINT(S) B, E, H, G

BRACING
TOP CHORD TO BE SHEATHED OR MAX. PURLIN SPACING = 6.25 FT.
MAX. UNBRACED BOTTOM CHORD LENGTH = 10.00 FT OR RIGID CEILING DIRECTLY APPLIED.

ALL PITCH BREAKS AND PERIMETER CORNER JOINTS MUST BE LATERALLY RESTRAINED.

LOADING
TOTAL LOAD CASES: (4)

CHORDS

MEMB. FR-TO	MAX. FACTORED FORCE (LBS)	FACTORED VERT. LOAD LC1 (PLF) FROM	TO	MAX CSI (LC)	MAX. UNBRAC LENGTH
A- B	0 / 17	-112.4	-112.4	0.02 (1)	10.00
B- J	-66 / 12	-112.4	-112.4	0.02 (1)	6.25
J- C	-109 / 0	-112.4	-112.4	0.03 (1)	6.25
C- D	-43 / 0	-112.4	-112.4	0.64 (1)	6.25
D- L	-93 / 0	-112.4	-112.4	0.03 (1)	6.25
L- E	-49 / 15	-112.4	-112.4	0.02 (1)	6.25
E- F	0 / 17	-112.4	-112.4	0.02 (1)	10.00
B- I	0 / 78	-18.5	-18.5	0.05 (1)	10.00
I- H	0 / 78	-18.5	-18.5	0.10 (4)	10.00
H- G	0 / 56	-18.5	-18.5	0.10 (4)	10.00
G- K	0 / 66	-18.5	-18.5	0.10 (4)	10.00
K- E	0 / 66	-18.5	-18.5	0.05 (1)	10.00

WEBS

MEMB. FR-TO	MAX. FACTORED FORCE (LBS)	MAX CSI (LC)
H- C	-332 / 0	0.05 (1)
C- G	-14 / 0	0.01 (1)
G- D	-346 / 0	0.05 (1)
I- J	-157 / 0	0.00 (1)
K- L	-159 / 0	0.00 (1)

DESIGN CRITERIA

SPECIFIED LOADS:

TOP CH.	LL	=	32.5	PSF
	DL	=	6.0	PSF
BOT CH.	LL	=	0.0	PSF
	DL	=	7.4	PSF
TOTAL LOAD		=	45.9	PSF

SPACING = 24.0 IN. C/C

LOADING IN FLAT SECTION BASED ON A SLOPE OF 6.00/12

THIS TRUSS IS DESIGNED FOR RESIDENTIAL OR SMALL BUILDING REQUIREMENTS OF PART 9, NBCC 2015

THIS DESIGN COMPLIES WITH:
- PART 9 OF BCBC 2018 , ABC 2019
- PART 9 OF OBC 2012 (2019 AMENDMENT)
- CSA 086-14
- TPIC 2014

(55 % OF 43.9 P.S.F. G.S.L. PLUS 8.4 P.S.F. RAIN LOAD) EQUALS 32.5 P.S.F. SPECIFIED ROOF LIVE LOAD

CSI: TC=0.64/1.00 (C-D:1) , BC=0.10/1.00 (H-I:4) , WB=0.05/1.00 (D-G:1) , SSI=0.25/1.00 (C-D:1)

DOL LUMBER=1.00 NAIL=1.00 LS BEND=1.10 COMP=1.10 SHEAR=1.10 TENS= 1.10

COMPANION LIVE LOAD FACTOR = 1.00

TRUSS PLATE MANUFACTURER IS NOT RESPONSIBLE FOR QUALITY CONTROL IN THE TRUSS MANUFACTURING PLANT .

NAIL VALUES

PLATE	GRIP(DRY) (PSI) MAX	MIN	SHEAR (PLI) MAX	MIN	SECTION (PLI) MAX	MIN
MT20	650	371	1747	788	1987	1873

PLATE PLACEMENT TOL. = 0.250 inches

PLATE ROTATION TOL. = 5.0 Deg.

JSI GRIP= 0.27 (D) (INPUT = 0.90)
JSI METAL= 0.07 (H) (INPUT = 1.00)

LICENSED PROFESSIONAL ENGINEER
06-24-22
H. J. G. ALVES
100009024
PROVINCE OF ONTARIO

Structural component only
DWG# T-2215270

REVIEWED

JOB NAME	TRUSS NAME	QUANTITY	PLY	JOB DESC.	DRWG NO.
423610	J1	7	1	BAYVIEW WELLINGTON TRUSS DESC.	

Tamarack Roof Truss, Burlington

Version 8.530 S Feb 23 2022 MiTek Industries, Inc. Fri Jun 24 13:52:11 2022 Page 1
ID:c3jyj23uDijq_8pvRKbkZpy75XW-QFxbiGtbHrfHabsKCmZgK57kCthRjgXFCIqFgSz33ao

Scale = 1:23.3

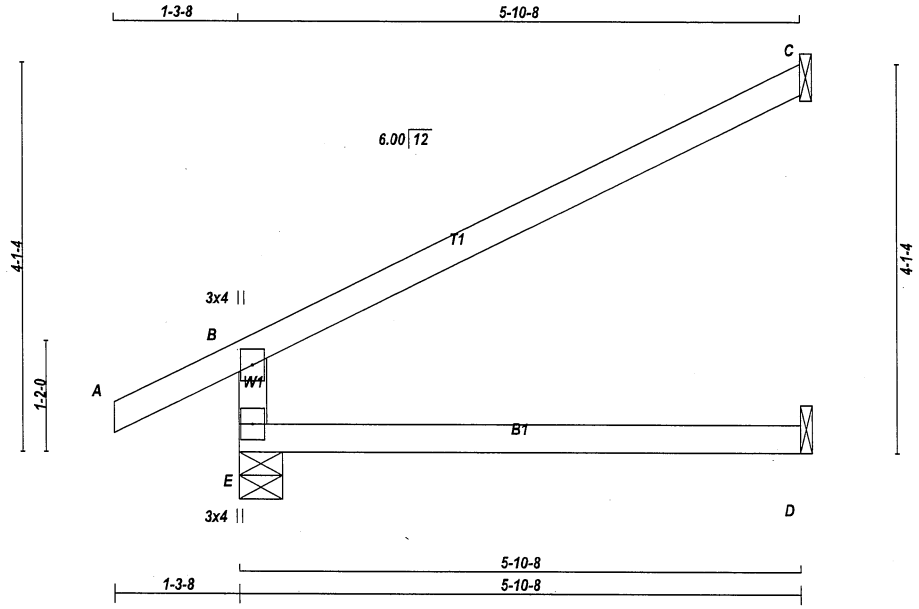

TOTAL WEIGHT = 7 X 17 = 118 lb
[M]

LUMBER
N. L. G. A. RULES

CHORDS	SIZE		LUMBER	DESCR.
E - B	2x4	DRY	No.2	SPF
A - C	2x4	DRY	No.2	SPF
E - D	2x4	DRY	No.2	SPF

DRY: SEASONED LUMBER.

PLATES (table is in inches)

JT	TYPE	PLATES	W	LEN	Y	X
B	TMV+p	MT20	3.0	4.0		
E	BMV1+p	MT20	3.0	4.0		

NOTES- (1)
1) Lateral braces to be a minimum of 2X4 SPF #2.

DIMENSIONS, SUPPORTS AND LOADINGS SPECIFIED BY FABRICATOR TO BE VERIFIED BY BUILDING DESIGNER

BEARINGS

JT	FACTORED GROSS REACTION VERT	HORZ	MAXIMUM FACTORED GROSS REACTION DOWN	HORZ	UPLIFT	INPUT BRG IN-SX	REQRD BRG IN-SX
E	629	0	629	0	0	5-8	5-8
C	248	0	248	0	0	1-8	1-8
D	45	0	50	0	0	1-8	1-8

SEE MITEK STANDARD DETAIL MSD2015-H FOR CONNECTION TO JOINT(S) C , D

UNFACTORED REACTIONS

JT	1ST LCASE COMBINED	MAX./MIN. COMPONENT REACTIONS SNOW	LIVE	PERM.LIVE	WIND	DEAD	SOIL
E	438	327 / 0	0 / 0	0 / 0	0 / 0	111 / 0	0 / 0
C	170	143 / 0	0 / 0	0 / 0	0 / 0	26 / 0	0 / 0
D	36	0 / 0	0 / 0	0 / 0	0 / 0	36 / 0	0 / 0

BEARING MATERIAL TO BE SPF NO.2 OR BETTER AT JOINT(S) E

BRACING
TOP CHORD TO BE SHEATHED OR MAX. PURLIN SPACING = 6.25 FT.
MAX. UNBRACED BOTTOM CHORD LENGTH = 10.00 FT OR RIGID CEILING DIRECTLY APPLIED.

ALL PITCH BREAKS AND PERIMETER CORNER JOINTS MUST BE LATERALLY RESTRAINED.

LOADING
TOTAL LOAD CASES: (4)

CHORDS

MEMB. FR-TO	MAX. FACTORED FORCE (LBS)	FACTORED VERT. LOAD (PLF) FROM	TO	LC1 MAX CSI (LC)	MAX. UNBRAC LENGTH
E- B	-565 / 0	0.0	0.0	0.13 (4)	7.81
A- B	0 / 34	-112.4	-112.4	0.15 (1)	10.00
B- C	-37 / 0	-112.4	-112.4	0.66 (1)	6.25
E- D	0 / 0	-18.5	-18.5	0.13 (4)	10.00

WEBS

MEMB. FR-TO	MAX. FACTORED FORCE (LBS)	MAX CSI (LC)

DESIGN CRITERIA

SPECIFIED LOADS:

TOP CH.	LL	=	32.5	PSF
	DL	=	6.0	PSF
BOT CH.	LL	=	0.0	PSF
	DL	=	7.4	PSF
TOTAL LOAD		=	45.9	PSF

SPACING = 24.0 IN. C/C

THIS TRUSS IS DESIGNED FOR RESIDENTIAL OR SMALL BUILDING REQUIREMENTS OF PART 9, NBCC 2015

THIS DESIGN COMPLIES WITH:
- PART 9 OF BCBC 2018 , ABC 2019
- PART 9 OF OBC 2012 (2019 AMENDMENT)
- CSA 086-14
- TPIC 2014

DESIGN ASSUMPTIONS
-OVERHANG NOT TO BE ALTERED OR CUT OFF.

(55 % OF 43.9 P.S.F. G.S.L. PLUS 8.4 P.S.F. RAIN LOAD) EQUALS 32.5 P.S.F. SPECIFIED ROOF LIVE LOAD

ALLOWABLE DEFL.(LL)= L/360 (0.20")
CALCULATED VERT. DEFL.(LL) = L/ 999 (0.00")
ALLOWABLE DEFL.(TL)= L/360 (0.20")
CALCULATED VERT. DEFL.(TL) = L/ 999 (0.03")

CSI: TC=0.66/1.00 (B-C:1) , BC=0.13/1.00 (D-E:4) , WB=0.00/1.00 (n/a:0) , SSI=0.29/1.00 (B-C:1)

DOL LUMBER=1.00 NAIL=1.00 LS BEND=1.10 COMP=1.10 SHEAR=1.10 TENS= 1.10

COMPANION LIVE LOAD FACTOR = 1.00

AUTOSOLVE RIGHT HEEL ONLY

TRUSS PLATE MANUFACTURER IS NOT RESPONSIBLE FOR QUALITY CONTROL IN THE TRUSS MANUFACTURING PLANT .

NAIL VALUES

PLATE	GRIP(DRY) (PSI) MAX	MIN	SHEAR (PLI) MAX	MIN	SECTION (PLI) MAX	MIN
MT20	650	371	1747	788	1987	1873

PLATE PLACEMENT TOL. = 0.250 inches

PLATE ROTATION TOL. = 5.0 Deg.

JSI GRIP= 0.23 (E) (INPUT = 0.90)
JSI METAL= 0.16 (B) (INPUT = 1.00)

LICENSED PROFESSIONAL ENGINEER
06-24-22
H. J. G. ALVES
100009024
PROVINCE OF ONTARIO

Structural component only
DWG# T-2215263

REVIEWED

JOB NAME	TRUSS NAME	QUANTITY	PLY	JOB DESC.	DRWG NO.
423610	J1S	6	1	BAYVIEW WELLINGTON TRUSS DESC.	

Tamarack Roof Truss, Burlington

Version 8.530 S Feb 23 2022 MiTek Industries, Inc. Fri Jun 24 13:52:12 2022 Page 1
ID:c3jyj23uDijq_8pvRKbkZpy75XW-uRVzwcuD29n8BlRXmU4vtJf_aGy6S6GOQyapCuz33an

Scale = 1:23.3

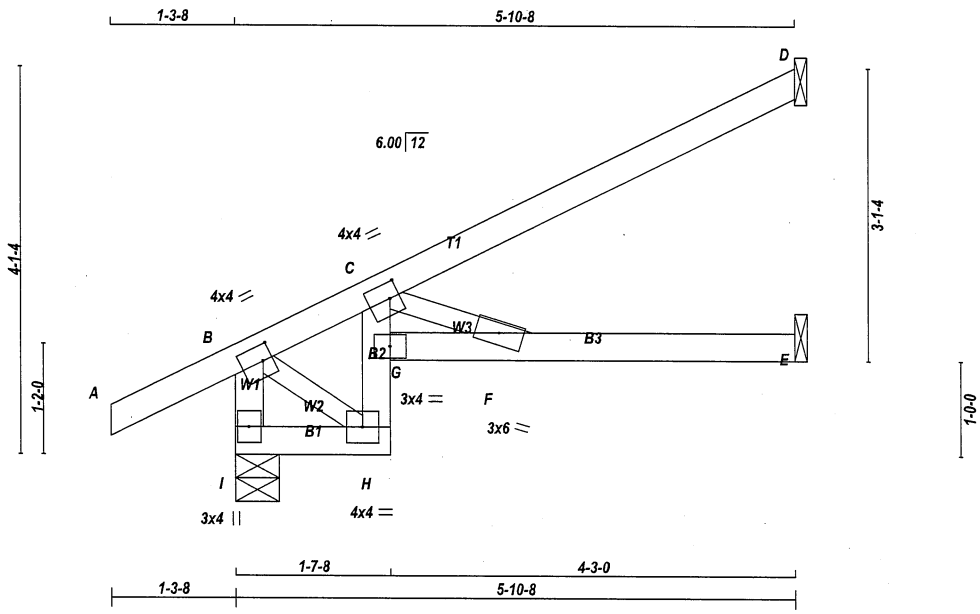

TOTAL WEIGHT = 6 X 21 = 124 lb
[M]

LUMBER
N. L. G. A. RULES

CHORDS	SIZE		LUMBER	DESCR.
I - B	2x4	DRY	No.2	SPF
A - D	2x4	DRY	No.2	SPF
I - H	2x4	DRY	No.2	SPF
H - C	2x4	DRY	No.2	SPF
G - E	2x4	DRY	No.2	SPF
ALL WEBS	2x3	DRY	No.2	SPF

DRY: SEASONED LUMBER.

PLATES (table is in inches)

JT	TYPE	PLATES	W	LEN	Y	X
B	TMVW-t	MT20	4.0	4.0	2.00	1.25
C	TMVW-t	MT20	4.0	4.0	2.00	1.25
F	BMW+w	MT20	3.0	6.0		
G	BVM-l	MT20	3.0	4.0		
H	BMVW-t	MT20	4.0	4.0		
I	BMV1+p	MT20	3.0	4.0		

NOTES- (1)
1) Lateral braces to be a minimum of 2X4 SPF #2.

DIMENSIONS, SUPPORTS AND LOADINGS SPECIFIED BY FABRICATOR TO BE VERIFIED BY BUILDING DESIGNER

BEARINGS

JT	FACTORED GROSS REACTION VERT	HORZ	MAXIMUM FACTORED GROSS REACTION DOWN	HORZ	UPLIFT	INPUT BRG IN-SX	REQRD BRG IN-SX
I	555	0	555	0	0	5-8	5-8
D	246	0	246	0	0	1-8	1-8
E	121	0	121	0	0	1-8	1-8

SEE MITEK STANDARD DETAIL MSD2015-H FOR CONNECTION TO JOINT(S) D , E

UNFACTORED REACTIONS

JT	1ST LCASE COMBINED	MAX./MIN. COMPONENT REACTIONS SNOW	LIVE	PERM.LIVE	WIND	DEAD	SOIL
I	386	289 / 0	0 / 0	0 / 0	0 / 0	97 / 0	0 / 0
D	169	137 / 0	0 / 0	0 / 0	0 / 0	32 / 0	0 / 0
E	88	44 / 0	0 / 0	0 / 0	0 / 0	45 / 0	0 / 0

BEARING MATERIAL TO BE SPF NO.2 OR BETTER AT JOINT(S) I

BRACING
TOP CHORD TO BE SHEATHED OR MAX. PURLIN SPACING = 6.25 FT.
MAX. UNBRACED BOTTOM CHORD LENGTH = 7.81 FT OR RIGID CEILING DIRECTLY APPLIED.

ALL PITCH BREAKS AND PERIMETER CORNER JOINTS MUST BE LATERALLY RESTRAINED.

LOADING
TOTAL LOAD CASES: (4)

CHORDS

MEMB. FR-TO	MAX. FACTORED FORCE (LBS)	FACTORED VERT. LOAD LC1 (PLF) FROM	TO	MAX CSI (LC)	MAX. UNBRAC LENGTH
I- B	-541 / 0	0.0	0.0	0.05 (1)	7.81
A- B	0 / 34	-112.4	-112.4	0.15 (1)	10.00
B- C	-278 / 0	-112.4	-112.4	0.14 (1)	6.25
C- D	0 / 4	-112.4	-112.4	0.37 (1)	10.00
I- H	0 / 0	-18.5	-18.5	0.01 (4)	10.00
H- G	-115 / 0	0.0	0.0	0.30 (1)	7.81
G- C	0 / 118	0.0	0.0	0.32 (1)	10.00
G- F	0 / 594	-18.5	-18.5	0.49 (1)	10.00
F- E	0 / 0	-18.5	-18.5	0.39 (1)	10.00

WEBS

MEMB. FR-TO	MAX. FACTORED FORCE (LBS)	MAX CSI (LC)
B- H	0 / 257	0.06 (1)
C- F	-654 / 0	0.10 (1)

DESIGN CRITERIA

SPECIFIED LOADS:

TOP CH.	LL	=	32.5	PSF
	DL	=	6.0	PSF
BOT CH.	LL	=	0.0	PSF
	DL	=	7.4	PSF
TOTAL LOAD		=	45.9	PSF

SPACING = 24.0 IN. C/C

THIS TRUSS IS DESIGNED FOR RESIDENTIAL OR SMALL BUILDING REQUIREMENTS OF PART 9, NBCC 2015

THIS DESIGN COMPLIES WITH:
- PART 9 OF BCBC 2018 , ABC 2019
- PART 9 OF OBC 2012 (2019 AMENDMENT)
- CSA 086-14
- TPIC 2014

DESIGN ASSUMPTIONS
-OVERHANG NOT TO BE ALTERED OR CUT OFF.

(55 % OF 43.9 P.S.F. G.S.L. PLUS 8.4 P.S.F. RAIN LOAD) EQUALS 32.5 P.S.F. SPECIFIED ROOF LIVE LOAD

ALLOWABLE DEFL.(LL)= L/360 (0.20")
CALCULATED VERT. DEFL.(LL) = L/ 890 (0.08")
ALLOWABLE DEFL.(TL)= L/360 (0.20")
CALCULATED VERT. DEFL.(TL) = L/ 468 (0.15")

CSI: TC=0.37/1.00 (C-D:1) , BC=0.49/1.00 (F-G:1) , WB=0.10/1.00 (C-F:1) , SSI=0.29/1.00 (C-G:1)

DOL LUMBER=1.00 NAIL=1.00 LS BEND=1.10 COMP=1.10 SHEAR=1.10 TENS= 1.10

COMPANION LIVE LOAD FACTOR = 1.00

TRUSS PLATE MANUFACTURER IS NOT RESPONSIBLE FOR QUALITY CONTROL IN THE TRUSS MANUFACTURING PLANT .

NAIL VALUES

PLATE	GRIP(DRY) (PSI) MAX	MIN	SHEAR (PLI) MAX	MIN	SECTION (PLI) MAX	MIN
MT20	650	371	1747	788	1987	1873

PLATE PLACEMENT TOL. = 0.250 inches

PLATE ROTATION TOL. = 5.0 Deg.

JSI GRIP= 0.52 (C) (INPUT = 0.90)
JSI METAL= 0.20 (G) (INPUT = 1.00)

LICENSED PROFESSIONAL ENGINEER
06-24-22
H. J. G. ALVES
100009024
PROVINCE OF ONTARIO

Structural component only
DWG# T-2215264

REVIEWED

JOB NAME	TRUSS NAME	QUANTITY	PLY	JOB DESC.	DRWG NO.
423610	J2	1	1	BAYVIEW WELLINGTON TRUSS DESC.	

Tamarack Roof Truss, Burlington

Version 8.530 S Feb 23 2022 MiTek Industries, Inc. Fri Jun 24 13:52:13 2022 Page 1
ID:c3jyj23uDijq_8pvRKbkZpy75XW-Me3L7yurpSv_pv0jKBb8PWCAmgNvBa1YfcJMILz33am

Scale = 1:18.2

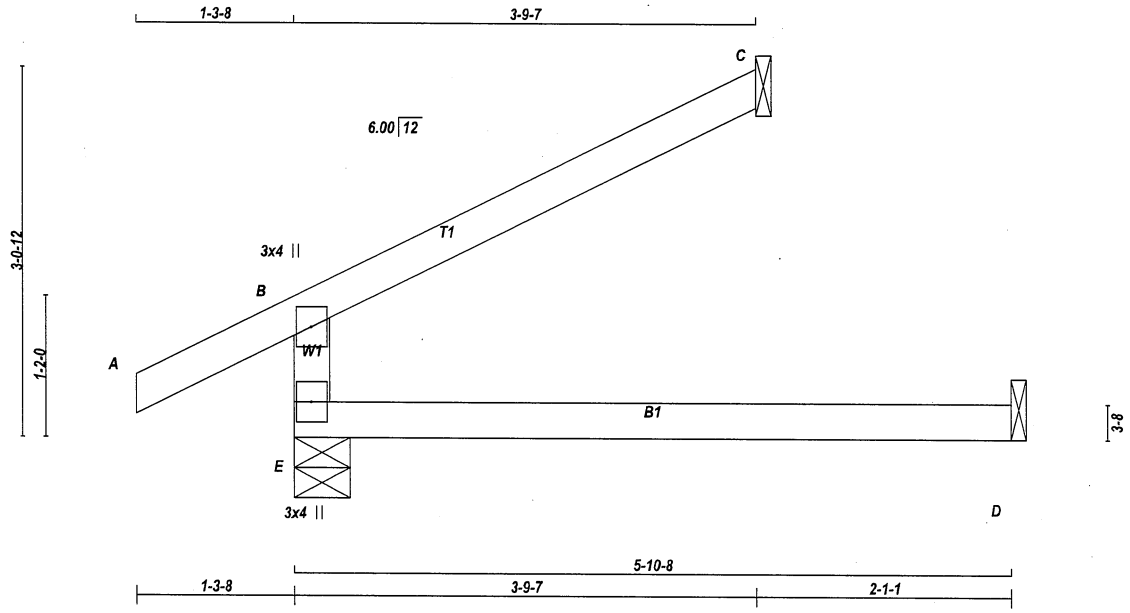

TOTAL WEIGHT = 14 lb

LUMBER
N. L. G. A. RULES

CHORDS	SIZE		LUMBER	DESCR.
E - B	2x4	DRY	No.2	SPF
A - C	2x4	DRY	No.2	SPF
E - D	2x4	DRY	No.2	SPF

DRY: SEASONED LUMBER.

PLATES (table is in inches)

JT	TYPE	PLATES	W	LEN	Y	X
B	TMV+p	MT20	3.0	4.0		
E	BMV1+p	MT20	3.0	4.0		

NOTES- (1)
1) Lateral braces to be a minimum of 2X4 SPF #2.

DIMENSIONS, SUPPORTS AND LOADINGS SPECIFIED BY FABRICATOR TO BE VERIFIED BY BUILDING DESIGNER

BEARINGS

JT	FACTORED GROSS REACTION VERT	HORZ	MAXIMUM FACTORED GROSS REACTION DOWN	HORZ	UPLIFT	INPUT BRG IN-SX	REQRD BRG IN-SX
E	482	0	482	0	0	5-8	5-8
C	160	0	160	0	0	1-8	1-8
D	45	0	50	0	0	1-8	1-8

SEE MITEK STANDARD DETAIL MSD2015-H FOR CONNECTION TO JOINT(S) C , D

UNFACTORED REACTIONS

JT	1ST LCASE COMBINED	MAX./MIN. COMPONENT REACTIONS SNOW	LIVE	PERM.LIVE	WIND	DEAD	SOIL
E	337	242 / 0	0 / 0	0 / 0	0 / 0	96 / 0	0 / 0
C	109	92 / 0	0 / 0	0 / 0	0 / 0	17 / 0	0 / 0
D	36	0 / 0	0 / 0	0 / 0	0 / 0	36 / 0	0 / 0

BEARING MATERIAL TO BE SPF NO.2 OR BETTER AT JOINT(S) E, C

BRACING
TOP CHORD TO BE SHEATHED OR MAX. PURLIN SPACING = 6.25 FT.
MAX. UNBRACED BOTTOM CHORD LENGTH = 10.00 FT OR RIGID CEILING DIRECTLY APPLIED.

ALL PITCH BREAKS AND PERIMETER CORNER JOINTS MUST BE LATERALLY RESTRAINED.

LOADING
TOTAL LOAD CASES: (4)

CHORDS

MEMB. FR-TO	MAX. FACTORED FORCE (LBS)	FACTORED VERT. LOAD (PLF) FROM	TO	LC1 CSI (LC)	MAX UNBRAC LENGTH
E- B	-418 / 0	0.0	0.0	0.13 (4)	7.81
A- B	0 / 34	-112.4	-112.4	0.15 (1)	10.00
B- C	-24 / 0	-112.4	-112.4	0.27 (1)	6.25
E- D	0 / 0	-18.5	-18.5	0.13 (4)	10.00

WEBS

MEMB. FR-TO	MAX. FACTORED FORCE (LBS)	MAX CSI (LC)

DESIGN CRITERIA

SPECIFIED LOADS:

TOP CH.	LL	=	32.5	PSF
	DL	=	6.0	PSF
BOT CH.	LL	=	0.0	PSF
	DL	=	7.4	PSF
TOTAL LOAD		=	45.9	PSF

SPACING = 24.0 IN. C/C

THIS TRUSS IS DESIGNED FOR RESIDENTIAL OR SMALL BUILDING REQUIREMENTS OF PART 9, NBCC 2015

THIS DESIGN COMPLIES WITH:
- PART 9 OF BCBC 2018 , ABC 2019
- PART 9 OF OBC 2012 (2019 AMENDMENT)
- CSA 086-14
- TPIC 2014

DESIGN ASSUMPTIONS
-OVERHANG NOT TO BE ALTERED OR CUT OFF.

(55 % OF 43.9 P.S.F. G.S.L. PLUS 8.4 P.S.F. RAIN LOAD) EQUALS 32.5 P.S.F. SPECIFIED ROOF LIVE LOAD

ALLOWABLE DEFL.(LL)= L/360 (0.20")
CALCULATED VERT. DEFL.(LL) = L/ 999 (0.00")
ALLOWABLE DEFL.(TL)= L/360 (0.20")
CALCULATED VERT. DEFL.(TL) = L/ 999 (0.03")

CSI: TC=0.27/1.00 (B-C:1) , BC=0.13/1.00 (D-E:4) , WB=0.00/1.00 (n/a:0) , SSI=0.19/1.00 (B-C:1)

DOL LUMBER=1.00 NAIL=1.00 LS BEND=1.10 COMP=1.10 SHEAR=1.10 TENS= 1.10

COMPANION LIVE LOAD FACTOR = 1.00

AUTOSOLVE RIGHT HEEL ONLY

TRUSS PLATE MANUFACTURER IS NOT RESPONSIBLE FOR QUALITY CONTROL IN THE TRUSS MANUFACTURING PLANT .

NAIL VALUES

PLATE	GRIP(DRY) (PSI) MAX	MIN	SHEAR (PLI) MAX	MIN	SECTION (PLI) MAX	MIN
MT20	650	371	1747	788	1987	1873

PLATE PLACEMENT TOL. = 0.250 inches

PLATE ROTATION TOL. = 5.0 Deg.

JSI GRIP= 0.17 (E) (INPUT = 0.90)
JSI METAL= 0.12 (B) (INPUT = 1.00)

LICENSED PROFESSIONAL ENGINEER
06-24-22
H. J. G. ALVES
100009024
PROVINCE OF ONTARIO

Structural component only
DWG# T-2215265

REVIEWED

JOB NAME	TRUSS NAME	QUANTITY	PLY	JOB DESC.	DRWG NO.
423610	J3	1	1	BAYVIEW WELLINGTON TRUSS DESC.	

Tamarack Roof Truss, Burlington

Version 8.530 S Feb 23 2022 MiTek Industries, Inc. Fri Jun 24 13:52:14 2022 Page 1
ID:c3jyj23uDijq_8pvRKbkZpy75XW-qqdjKlvUam1rR3bvuv7NykINV4i2w1GhuG3vHnz33aI

Scale = 1:13.6

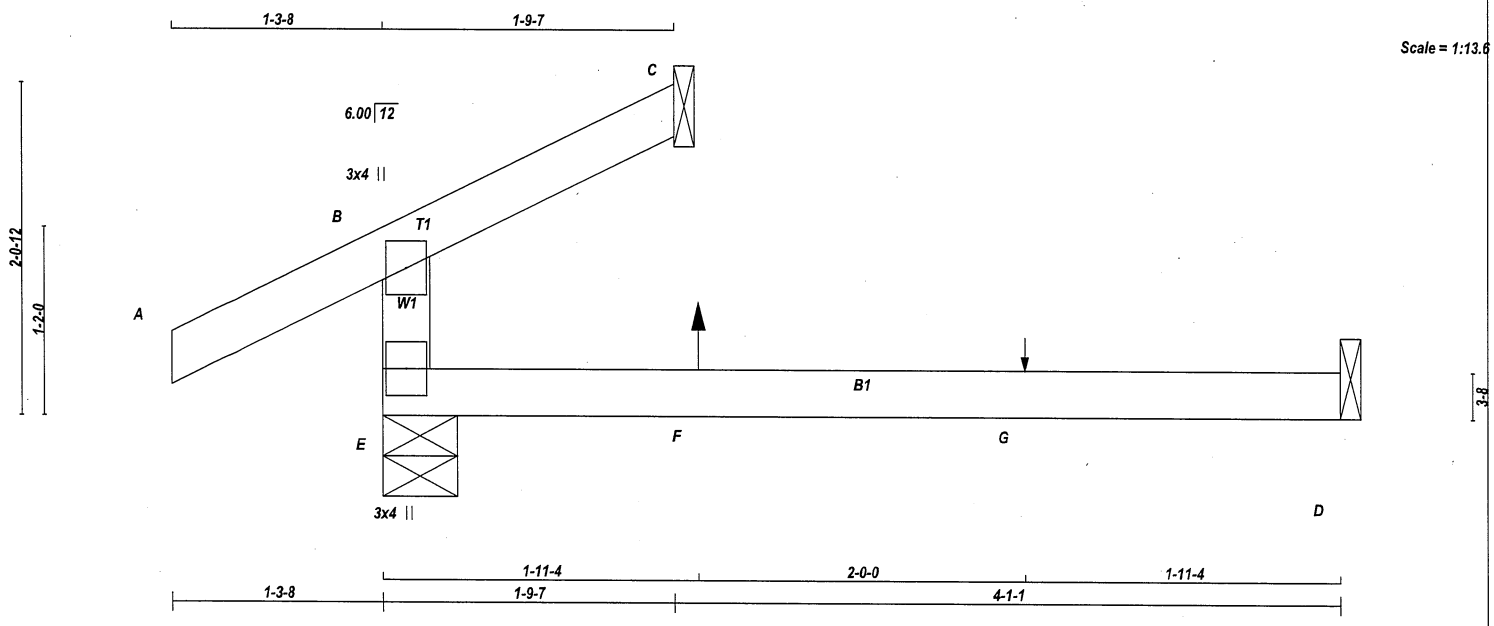

TOTAL WEIGHT = 12 lb
[M]

LUMBER
N. L. G. A. RULES

CHORDS	SIZE		LUMBER	DESCR.
E - B	2x4	DRY	No.2	SPF
A - C	2x4	DRY	No.2	SPF
E - D	2x4	DRY	No.2	SPF

DRY: SEASONED LUMBER.

PLATES (table is in inches)

JT	TYPE	PLATES	W	LEN	Y	X
B	TMV+p	MT20	3.0	4.0		
E	BMV1+p	MT20	3.0	4.0		

NOTES- (1)
1) Lateral braces to be a minimum of 2X4 SPF #2.

DIMENSIONS, SUPPORTS AND LOADINGS SPECIFIED BY FABRICATOR TO BE VERIFIED BY BUILDING DESIGNER

BEARINGS

JT	FACTORED GROSS REACTION VERT	HORZ	MAXIMUM FACTORED GROSS REACTION DOWN	HORZ	UPLIFT	INPUT BRG IN-SX	REQRD BRG IN-SX
E	340	0	340	0	0	5-8	5-8
C	71	0	71	0	0	1-8	1-8
D	43	0	52	0	0	1-8	1-8

SEE MITEK STANDARD DETAIL MSD2015-H FOR CONNECTION TO JOINT(S) C , D

UNFACTORED REACTIONS

JT	1ST LCASE COMBINED	MAX./MIN. COMPONENT REACTIONS SNOW	LIVE	PERM.LIVE	WIND	DEAD	SOIL
E	237	175 / 0	0 / 0	0 / 0	0 / 0	62 / 0	0 / 0
C	52	26 / 0	0 / 0	0 / 0	0 / 0	25 / 0	0 / 0
D	35	0 / -3	0 / 0	0 / 0	0 / 0	37 / 0	0 / 0

BEARING MATERIAL TO BE SPF NO.2 OR BETTER AT JOINT(S) E, C

BRACING
TOP CHORD TO BE SHEATHED OR MAX. PURLIN SPACING = 6.25 FT.
MAX. UNBRACED BOTTOM CHORD LENGTH = 10.00 FT OR RIGID CEILING DIRECTLY APPLIED.

ALL PITCH BREAKS AND PERIMETER CORNER JOINTS MUST BE LATERALLY RESTRAINED.

LOADING
TOTAL LOAD CASES: (7)

CHORDS MEMB. FR-TO	MAX. FACTORED FORCE (LBS)	FROM	FACTORED VERT. LOAD (PLF) TO	LC1	MAX CSI (LC)	WEBS MAX. UNBRAC LENGTH	MEMB. FR-TO	MAX. FACTORED FORCE (LBS)	MAX CSI (LC)
E- B	-284 / 0		0.0	0.0	0.11 (4)	7.81			
A- B	0 / 34		-112.4	-112.4	0.15 (1)	10.00			
B- C	-14 / 9		-112.4	-112.4	0.08 (4)	6.25			
E- F	0 / 0		-18.5	-18.5	0.14 (4)	10.00			
F- G	0 / 0		-18.5	-18.5	0.14 (4)	10.00			
G- D	0 / 0		-18.5	-18.5	0.14 (4)	10.00			

SPECIFIED CONCENTRATED LOADS (LBS)

JT	LOC.	LC1	MAX-	MAX+	FACE	DIR.	TYPE	HEEL	CONN.
F	1-11-4	6	1	10	FRONT	VERT	TOTAL	---	C1
G	3-11-4	1	1	---	FRONT	VERT	TOTAL	---	C1

CONNECTION REQUIREMENTS

1) **C1:** A SUITABLE HANGER/MECHANICAL CONNECTION IS REQUIRED.

DESIGN CRITERIA

SPECIFIED LOADS:

TOP CH.	LL	=	32.5	PSF
	DL	=	6.0	PSF
BOT CH.	LL	=	0.0	PSF
	DL	=	7.4	PSF
TOTAL LOAD		=	45.9	PSF

SPACING = 24.0 IN. C/C

THIS TRUSS IS DESIGNED FOR RESIDENTIAL OR SMALL BUILDING REQUIREMENTS OF PART 9, NBCC 2015

THIS DESIGN COMPLIES WITH:
- PART 9 OF BCBC 2018 , ABC 2019
- PART 9 OF OBC 2012 (2019 AMENDMENT)
- CSA 086-14
- TPIC 2014

DESIGN ASSUMPTIONS
-OVERHANG NOT TO BE ALTERED OR CUT OFF.

(55 % OF 43.9 P.S.F. G.S.L. PLUS 8.4 P.S.F. RAIN LOAD) EQUALS 32.5 P.S.F. SPECIFIED ROOF LIVE LOAD

ALLOWABLE DEFL.(LL)= L/360 (0.20")
CALCULATED VERT. DEFL.(LL) = L/ 999 (0.01")
ALLOWABLE DEFL.(TL)= L/360 (0.20")
CALCULATED VERT. DEFL.(TL) = L/ 999 (0.04")

CSI: TC=0.15/1.00 (A-B:1) , BC=0.14/1.00 (D-E:4) , WB=0.00/1.00 (n/a:0) , SSI=0.11/1.00 (A-B:1)

DOL LUMBER=1.00 NAIL=1.00 LS BEND=1.10 COMP=1.10 SHEAR=1.10 TENS= 1.10

COMPANION LIVE LOAD FACTOR = 1.00

AUTOSOLVE RIGHT HEEL ONLY

TRUSS PLATE MANUFACTURER IS NOT RESPONSIBLE FOR QUALITY CONTROL IN THE TRUSS MANUFACTURING PLANT .

NAIL VALUES

PLATE	GRIP(DRY) (PSI) MAX	MIN	SHEAR (PLI) MAX	MIN	SECTION (PLI) MAX	MIN
MT20	650	371	1747	788	1987	1873

PLATE PLACEMENT TOL. = 0.250 inches

PLATE ROTATION TOL. = 5.0 Deg.

JSI GRIP= 0.11 (E) (INPUT = 0.90)
JSI METAL= 0.08 (B) (INPUT = 1.00)

LICENSED PROFESSIONAL ENGINEER
06-24-22
H. J. G. ALVES
100009024
PROVINCE OF ONTARIO

Structural component only
DWG# T-2215266

REVIEWED

JOB NAME	TRUSS NAME	QUANTITY	PLY	JOB DESC.	DRWG NO.
423610	J4	1	1	BAYVIEW WELLINGTON TRUSS DESC.	

Tamarack Roof Truss, Burlington

Version 8.530 S Feb 23 2022 MiTek Industries, Inc. Fri Jun 24 13:52:15 2022 Page 1
ID:c3jyj23uDijq_8pvRKbkZpy75XW-J0B5Yew6L49i2DA6RcecVxHWGU4AfUWq7woTpDz33ak

Scale = 1:18.4

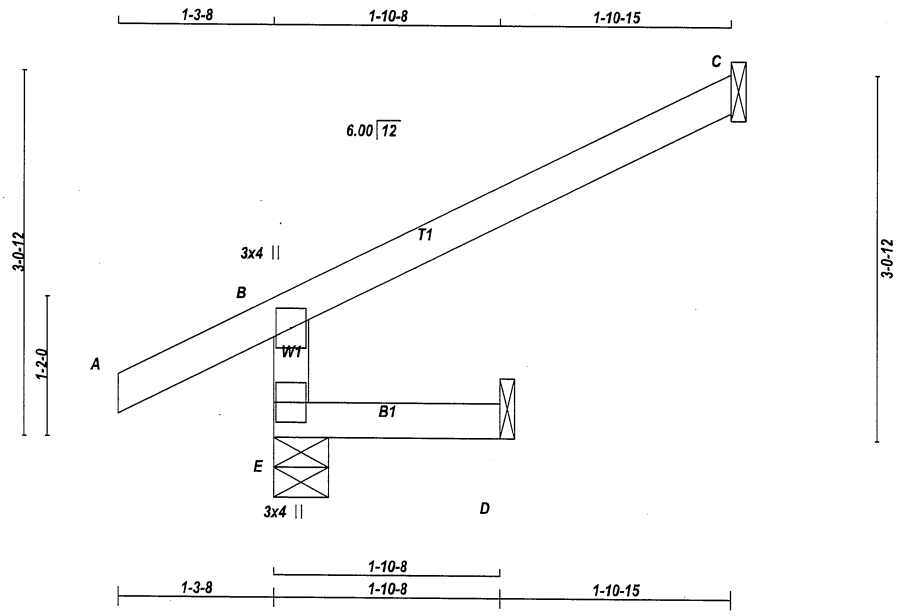

TOTAL WEIGHT = 10 lb
[M]

LUMBER
N. L. G. A. RULES

CHORDS	SIZE		LUMBER	DESCR.
E - B	2x4	DRY	No.2	SPF
A - C	2x4	DRY	No.2	SPF
E - D	2x4	DRY	No.2	SPF

DRY: SEASONED LUMBER.

PLATES (table is in inches)

JT	TYPE	PLATES	W	LEN	Y	X
B	TMV+p	MT20	3.0	4.0		
E	BMV1+p	MT20	3.0	4.0		

NOTES- (1)
1) Lateral braces to be a minimum of 2X4 SPF #2.

DIMENSIONS, SUPPORTS AND LOADINGS SPECIFIED BY FABRICATOR TO BE VERIFIED BY BUILDING DESIGNER

BEARINGS

JT	FACTORED GROSS REACTION VERT	HORZ	MAXIMUM FACTORED GROSS REACTION DOWN	HORZ	UPLIFT	INPUT BRG IN-SX	REQRD BRG IN-SX
E	438	0	438	0	0	5-8	5-8
C	160	0	160	0	0	1-8	1-8
D	16	0	17	0	0	1-8	1-8

SEE MITEK STANDARD DETAIL MSD2015-H FOR CONNECTION TO JOINT(S) C , D

UNFACTORED REACTIONS

JT	1ST LCASE COMBINED	MAX./MIN. COMPONENT REACTIONS SNOW	LIVE	PERM.LIVE	WIND	DEAD	SOIL
E	302	242 / 0	0 / 0	0 / 0	0 / 0	60 / 0	0 / 0
C	109	92 / 0	0 / 0	0 / 0	0 / 0	17 / 0	0 / 0
D	12	0 / 0	0 / 0	0 / 0	0 / 0	12 / 0	0 / 0

BEARING MATERIAL TO BE SPF NO.2 OR BETTER AT JOINT(S) E

BRACING
TOP CHORD TO BE SHEATHED OR MAX. PURLIN SPACING = 6.25 FT.
MAX. UNBRACED BOTTOM CHORD LENGTH = 10.00 FT OR RIGID CEILING DIRECTLY APPLIED.

ALL PITCH BREAKS AND PERIMETER CORNER JOINTS MUST BE LATERALLY RESTRAINED.

LOADING
TOTAL LOAD CASES: (5)

CHORDS

MEMB. FR-TO	MAX. FACTORED FORCE (LBS)	FACTORED VERT. LOAD (PLF) FROM	TO	LC1 MAX CSI (LC)	MAX. UNBRAC LENGTH
E- B	-418 / 0	0.0	0.0	0.01 (4)	7.81
A- B	0 / 34	-112.4	-112.4	0.15 (1)	10.00
B- C	-24 / 0	-112.4	-112.4	0.27 (1)	6.25
E- D	0 / 0	-18.5	-18.5	0.02 (4)	10.00

WEBS

MEMB. FR-TO	MAX. FACTORED FORCE (LBS)	MAX CSI (LC)

CANTILEVER ANALYSIS HAS BEEN CONSIDERED IN THIS DESIGN

DESIGN CRITERIA

SPECIFIED LOADS:

TOP CH.	LL	=	32.5	PSF
	DL	=	6.0	PSF
BOT CH.	LL	=	0.0	PSF
	DL	=	7.4	PSF
TOTAL LOAD		=	45.9	PSF

SPACING = 24.0 IN. C/C

THIS TRUSS IS DESIGNED FOR RESIDENTIAL OR SMALL BUILDING REQUIREMENTS OF PART 9, NBCC 2015

THIS DESIGN COMPLIES WITH:
- PART 9 OF BCBC 2018 , ABC 2019
- PART 9 OF OBC 2012 (2019 AMENDMENT)
- CSA 086-14
- TPIC 2014

DESIGN ASSUMPTIONS
-OVERHANG NOT TO BE ALTERED OR CUT OFF.

(55 % OF 43.9 P.S.F. G.S.L. PLUS 8.4 P.S.F. RAIN LOAD) EQUALS 32.5 P.S.F. SPECIFIED ROOF LIVE LOAD

ALLOWABLE DEFL.(LL)= L/360 (0.19")
CALCULATED VERT. DEFL.(LL) = L/ 999 (0.00")
ALLOWABLE DEFL.(TL)= L/360 (0.19")
CALCULATED VERT. DEFL.(TL) = L/ 999 (0.00")

CSI: TC=0.27/1.00 (B-C:1) , BC=0.02/1.00 (D-E:4) , WB=0.00/1.00 (n/a:0) , SSI=0.19/1.00 (B-C:1)

DOL LUMBER=1.00 NAIL=1.00 LS BEND=1.10 COMP=1.10 SHEAR=1.10 TENS= 1.10

COMPANION LIVE LOAD FACTOR = 1.00

AUTOSOLVE RIGHT HEEL ONLY

TRUSS PLATE MANUFACTURER IS NOT RESPONSIBLE FOR QUALITY CONTROL IN THE TRUSS MANUFACTURING PLANT .

NAIL VALUES

PLATE	GRIP(DRY) (PSI) MAX	MIN	SHEAR (PLI) MAX	MIN	SECTION (PLI) MAX	MIN
MT20	650	371	1747	788	1987	1873

PLATE PLACEMENT TOL. = 0.250 inches

PLATE ROTATION TOL. = 5.0 Deg.

JSI GRIP= 0.17 (E) (INPUT = 0.90)
JSI METAL= 0.12 (B) (INPUT = 1.00)

LICENSED PROFESSIONAL ENGINEER
06-24-22
H. J. G. ALVES
100009024
PROVINCE OF ONTARIO

Structural component only
DWG# T-2215267

REVIEWED

JOB NAME	TRUSS NAME	QUANTITY	PLY	JOB DESC.	DRWG NO.
423610	J5	1	1	BAYVIEW WELLINGTON TRUSS DESC.	

Tamarack Roof Truss, Burlington

Version 8.530 S Feb 23 2022 MiTek Industries, Inc. Fri Jun 24 13:52:15 2022 Page 1
ID:c3jyj23uDijq_8pvRKbkZpy75XW-J0B5Yew6L49i2DA6RcecVxHYFU4jfUWq7woTpDz33ak

Scale = 1:13.3

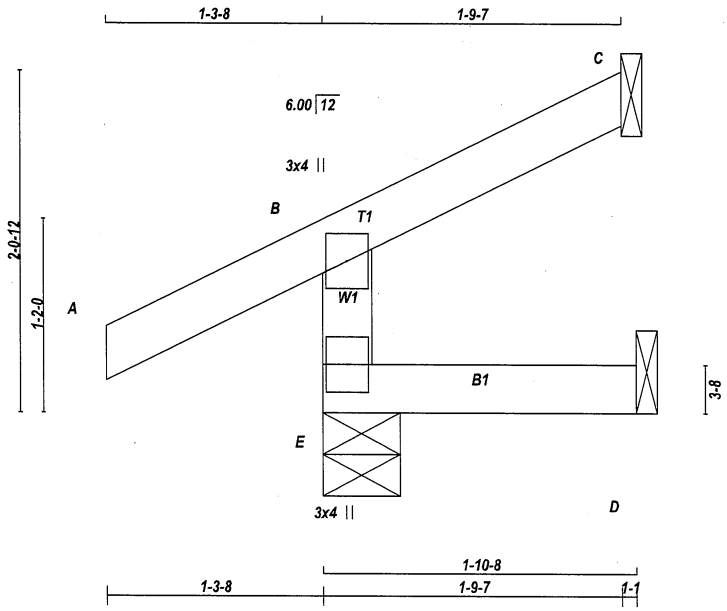

TOTAL WEIGHT = 7 lb

LUMBER
N. L. G. A. RULES

CHORDS	SIZE		LUMBER	DESCR.
E - B	2x4	DRY	No.2	SPF
A - C	2x4	DRY	No.2	SPF
E - D	2x4	DRY	No.2	SPF

DRY: SEASONED LUMBER.

PLATES (table is in inches)

JT	TYPE	PLATES	W	LEN	Y	X
B	TMV+p	MT20	3.0	4.0		
E	BMV1+p	MT20	3.0	4.0		

NOTES- (1)
1) Lateral braces to be a minimum of 2X4 SPF #2.

DIMENSIONS, SUPPORTS AND LOADINGS SPECIFIED BY FABRICATOR TO BE VERIFIED BY BUILDING DESIGNER

BEARINGS

JT	FACTORED GROSS REACTION VERT	HORZ	MAXIMUM FACTORED GROSS REACTION DOWN	HORZ	UPLIFT	INPUT BRG IN-SX	REQRD BRG IN-SX
E	328	0	328	0	0	5-8	5-8
C	54	0	54	0	-30	1-8	1-8
D	6	0	17	0	-5	1-8	1-8

SEE MITEK STANDARD DETAIL MSD2015-H FOR CONNECTION TO JOINT(S) C , D

PROVIDE ANCHORAGE AT BEARING JOINT C FOR 150 LBS FACTORED UPLIFT
PROVIDE ANCHORAGE AT BEARING JOINT D FOR 150 LBS FACTORED UPLIFT

UNFACTORED REACTIONS

JT	1ST LCASE COMBINED	MAX./MIN. COMPONENT REACTIONS SNOW	LIVE	PERM.LIVE	WIND	DEAD	SOIL
E	226	179 / 0	0 / 0	0 / 0	0 / 0	47 / 0	0 / 0
C	37	31 / -23	0 / 0	0 / 0	0 / 0	7 / 0	0 / 0
D	6	0 / -10	0 / 0	0 / 0	0 / 0	12 / 0	0 / 0

BEARING MATERIAL TO BE SPF NO.2 OR BETTER AT JOINT(S) E, C

BRACING
TOP CHORD TO BE SHEATHED OR MAX. PURLIN SPACING = 6.25 FT.
MAX. UNBRACED BOTTOM CHORD LENGTH = 10.00 FT OR RIGID CEILING DIRECTLY APPLIED.

ALL PITCH BREAKS AND PERIMETER CORNER JOINTS MUST BE LATERALLY RESTRAINED.

LOADING
TOTAL LOAD CASES: (5)

CHORDS MEMB. FR-TO	MAX. FACTORED FORCE (LBS)	FACTORED VERT. LOAD (PLF) FROM	TO	LC1 MAX CSI (LC)	WEBS MAX. UNBRAC LENGTH FR-TO	MEMB.	MAX. FACTORED FORCE (LBS)	MAX CSI (LC)
E- B	-299 / 0	0.0	0.0	0.05 (5)	7.81			
A- B	0 / 34	-112.4	-112.4	0.15 (1)	10.00			
B- C	-21 / 0	-112.4	-112.4	0.11 (1)	6.25			
E- D	0 / 0	-18.5	-18.5	0.04 (5)	10.00			

CANTILEVER ANALYSIS HAS BEEN CONSIDERED IN THIS DESIGN

[M]

DESIGN CRITERIA

SPECIFIED LOADS:

TOP CH.	LL	=	32.5	PSF
	DL	=	6.0	PSF
BOT CH.	LL	=	0.0	PSF
	DL	=	7.4	PSF
TOTAL LOAD		=	45.9	PSF

SPACING = 24.0 IN. C/C

THIS TRUSS IS DESIGNED FOR RESIDENTIAL OR SMALL BUILDING REQUIREMENTS OF PART 9, NBCC 2015

THIS DESIGN COMPLIES WITH:
- PART 9 OF BCBC 2018 , ABC 2019
- PART 9 OF OBC 2012 (2019 AMENDMENT)
- CSA 086-14
- TPIC 2014

DESIGN ASSUMPTIONS
-OVERHANG NOT TO BE ALTERED OR CUT OFF.

(55 % OF 43.9 P.S.F. G.S.L. PLUS 8.4 P.S.F. RAIN LOAD) EQUALS 32.5 P.S.F. SPECIFIED ROOF LIVE LOAD

ALLOWABLE DEFL.(LL)= L/360 (0.19")
CALCULATED VERT. DEFL.(LL) = L/ 999 (0.00")
ALLOWABLE DEFL.(TL)= L/360 (0.19")
CALCULATED VERT. DEFL.(TL) = L/ 999 (0.00")

CSI: TC=0.15/1.00 (A-B:1) , BC=0.04/1.00 (D-E:5) , WB=0.00/1.00 (n/a:0) , SSI=0.11/1.00 (A-B:1)

DOL LUMBER=1.00 NAIL=1.00 LS BEND=1.10 COMP=1.10 SHEAR=1.10 TENS= 1.10

COMPANION LIVE LOAD FACTOR = 1.00

AUTOSOLVE RIGHT HEEL ONLY

TRUSS PLATE MANUFACTURER IS NOT RESPONSIBLE FOR QUALITY CONTROL IN THE TRUSS MANUFACTURING PLANT .

NAIL VALUES

PLATE	GRIP(DRY) (PSI) MAX	MIN	SHEAR (PLI) MAX	MIN	SECTION (PLI) MAX	MIN
MT20	650	371	1747	788	1987	1873

PLATE PLACEMENT TOL. = 0.250 inches

PLATE ROTATION TOL. = 5.0 Deg.

JSI GRIP= 0.12 (E) (INPUT = 0.90)
JSI METAL= 0.08 (B) (INPUT = 1.00)

LICENSED PROFESSIONAL ENGINEER
06-24-22
H. J. G. ALVES
100009024
PROVINCE OF ONTARIO

Structural component only
DWG# T-2215268

REVIEWED

JOB NAME	TRUSS NAME	QUANTITY	PLY	JOB DESC.	DRWG NO.
423610	J6	3	1	BAYVIEW WELLINGTON TRUSS DESC.	

Tamarack Roof Truss, Burlington

Version 8.530 S Feb 23 2022 MiTek Industries, Inc. Fri Jun 24 13:52:16 2022 Page 1
ID:c3jyj23uDijq_8pvRKbkZpy75XW-nDIUI_xk6NHZgNII?K9r19qi_uQ?Oxm_LaY0Lgz33aj

Scale = 1:12.4

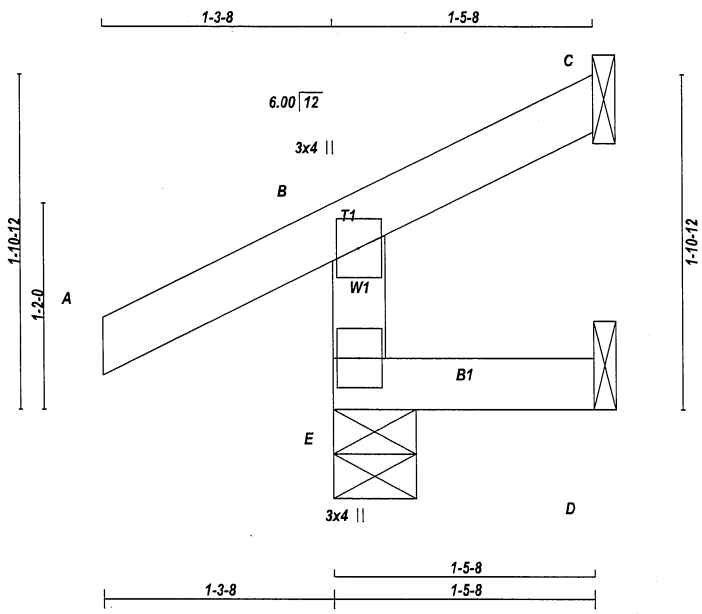

TOTAL WEIGHT = 3 X 6 = 18 lb

LUMBER
N. L. G. A. RULES

CHORDS	SIZE		LUMBER	DESCR.
E - B	2x4	DRY	No.2	SPF
A - C	2x4	DRY	No.2	SPF
E - D	2x4	DRY	No.2	SPF

DRY: SEASONED LUMBER.

PLATES (table is in inches)

JT	TYPE	PLATES	W	LEN	Y	X
B	TMV+p	MT20	3.0	4.0		
E	BMV1+p	MT20	3.0	4.0		

NOTES- (1)
1) Lateral braces to be a minimum of 2X4 SPF #2.

DIMENSIONS, SUPPORTS AND LOADINGS SPECIFIED BY FABRICATOR TO BE VERIFIED BY BUILDING DESIGNER

BEARINGS

JT	FACTORED GROSS REACTION VERT	HORZ	MAXIMUM FACTORED GROSS REACTION DOWN	HORZ	UPLIFT	INPUT BRG IN-SX	REQRD BRG IN-SX
E	319	0	319	0	0	5-8	5-8
C	27	0	27	0	-42	1-8	1-8
D	-2	0	12	0	-11	1-8	1-8

SEE MITEK STANDARD DETAIL MSD2015-H FOR CONNECTION TO JOINT(S) C , D

PROVIDE ANCHORAGE AT BEARING JOINT C FOR 150 LBS FACTORED UPLIFT
PROVIDE ANCHORAGE AT BEARING JOINT D FOR 150 LBS FACTORED UPLIFT

UNFACTORED REACTIONS

JT	1ST LCASE COMBINED	MAX./MIN. COMPONENT REACTIONS SNOW	LIVE	PERM.LIVE	WIND	DEAD	SOIL
E	220	176 / 0	0 / 0	0 / 0	0 / 0	43 / 0	0 / 0
C	19	15 / -29	0 / 0	0 / 0	0 / 0	3 / 0	0 / 0
D	-0	0 / -12	0 / 0	0 / 0	0 / 0	8 / 0	0 / 0

BEARING MATERIAL TO BE SPF NO.2 OR BETTER AT JOINT(S) E

BRACING
TOP CHORD TO BE SHEATHED OR MAX. PURLIN SPACING = 6.25 FT.
MAX. UNBRACED BOTTOM CHORD LENGTH = 10.00 FT OR RIGID CEILING DIRECTLY APPLIED.

ALL PITCH BREAKS AND PERIMETER CORNER JOINTS MUST BE LATERALLY RESTRAINED.

LOADING
TOTAL LOAD CASES: (5)

CHORDS MEMB. FR-TO	MAX. FACTORED FORCE (LBS)	FACTORED VERT. LOAD (PLF) FROM	TO	LC1 MAX CSI (LC)	WEBS MAX. UNBRAC LENGTH	MEMB. FR-TO	MAX. FACTORED FORCE (LBS)	MAX CSI (LC)
E- B	-290 / 0	0.0	0.0	0.04 (5)	7.81			
A- B	0 / 34	-112.4	-112.4	0.15 (1)	10.00			
B- C	-25 / 0	-112.4	-112.4	0.11 (1)	6.25			
E- D	0 / 0	-18.5	-18.5	0.04 (5)	10.00			

CANTILEVER ANALYSIS HAS BEEN CONSIDERED IN THIS DESIGN

DESIGN CRITERIA

SPECIFIED LOADS:

TOP CH.	LL	=	32.5	PSF
	DL	=	6.0	PSF
BOT CH.	LL	=	0.0	PSF
	DL	=	7.4	PSF
TOTAL LOAD		=	45.9	PSF

SPACING = 24.0 IN. C/C

THIS TRUSS IS DESIGNED FOR RESIDENTIAL OR SMALL BUILDING REQUIREMENTS OF PART 9, NBCC 2015

THIS DESIGN COMPLIES WITH:
- PART 9 OF BCBC 2018 , ABC 2019
- PART 9 OF OBC 2012 (2019 AMENDMENT)
- CSA 086-14
- TPIC 2014

DESIGN ASSUMPTIONS
-OVERHANG NOT TO BE ALTERED OR CUT OFF.

(55 % OF 43.9 P.S.F. G.S.L. PLUS 8.4 P.S.F. RAIN LOAD) EQUALS 32.5 P.S.F. SPECIFIED ROOF LIVE LOAD

ALLOWABLE DEFL.(LL)= L/360 (0.19")
CALCULATED VERT. DEFL.(LL) = L/ 999 (0.00")
ALLOWABLE DEFL.(TL)= L/360 (0.19")
CALCULATED VERT. DEFL.(TL) = L/ 999 (0.00")

CSI: TC=0.15/1.00 (A-B:1) , BC=0.04/1.00 (D-E:5) , WB=0.00/1.00 (n/a:0) , SSI=0.11/1.00 (A-B:1)

DOL LUMBER=1.00 NAIL=1.00 LS BEND=1.10 COMP=1.10 SHEAR=1.10 TENS= 1.10

COMPANION LIVE LOAD FACTOR = 1.00

AUTOSOLVE RIGHT HEEL ONLY

TRUSS PLATE MANUFACTURER IS NOT RESPONSIBLE FOR QUALITY CONTROL IN THE TRUSS MANUFACTURING PLANT .

NAIL VALUES

PLATE	GRIP(DRY) (PSI) MAX	MIN	SHEAR (PLI) MAX	MIN	SECTION (PLI) MAX	MIN
MT20	650	371	1747	788	1987	1873

PLATE PLACEMENT TOL. = 0.250 inches

PLATE ROTATION TOL. = 5.0 Deg.

JSI GRIP= 0.12 (E) (INPUT = 0.90)
JSI METAL= 0.08 (B) (INPUT = 1.00)

LICENSED PROFESSIONAL ENGINEER
06-24-22
H. J. G. ALVES
100009024
PROVINCE OF ONTARIO

Structural component only
DWG# T-2215269

REVIEWED

JOB NAME	TRUSS NAME	QUANTITY	PLY	JOB DESC.	DRWG NO.
423613	J20	2	1	BAYVIEW WELLINGTON TRUSS DESC.	

Tamarack Roof Truss, Burlington

Version 8.530 S Feb 23 2022 MiTek Industries, Inc. Fri Jun 24 14:22:02 2022 Page 1
ID:c3jyj23uDijq_8pvRKbkZpy75XW-UpffbgY1V7J9xrHYdQCgQnow8q_Brhvs1RAW18z338p

Scale = 1:19.2

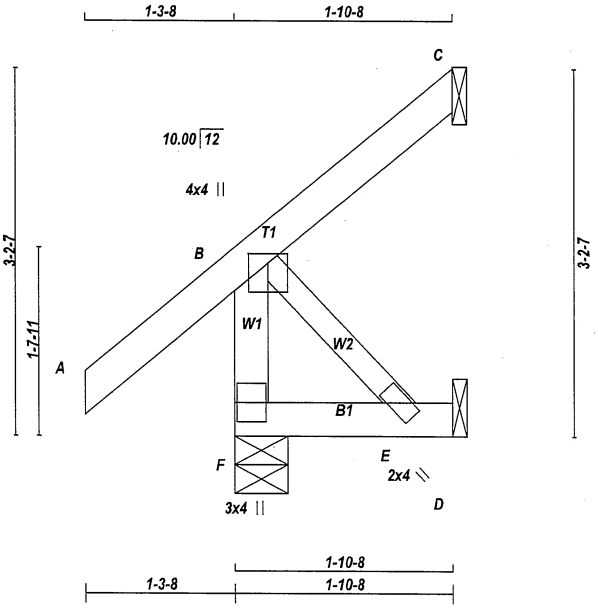

TOTAL WEIGHT = 2 X 10 = 20 lb
[M]

LUMBER
N. L. G. A. RULES

CHORDS	SIZE		LUMBER	DESCR.
F - B	2x4	DRY	No.2	SPF
A - C	2x4	DRY	No.2	SPF
F - D	2x4	DRY	No.2	SPF
ALL WEBS	2x3	DRY	No.2	SPF

DRY: SEASONED LUMBER.

PLATES (table is in inches)

JT	TYPE	PLATES	W	LEN	Y	X
B	TMVW+p	MT20	4.0	4.0	1.00	2.00
E	BMW+w	MT20	2.0	4.0		
F	BMV1+p	MT20	3.0	4.0		

NOTES- (1)
1) Lateral braces to be a minimum of 2X4 SPF #2.

DIMENSIONS, SUPPORTS AND LOADINGS SPECIFIED BY FABRICATOR TO BE VERIFIED BY BUILDING DESIGNER

BEARINGS

JT	FACTORED GROSS REACTION VERT	HORZ	MAXIMUM FACTORED GROSS REACTION DOWN	HORZ	UPLIFT	INPUT BRG IN-SX	REQRD BRG IN-SX
F	336	0	336	0	0	5-8	5-8
C	48	0	48	0	-47	1-8	1-8
D	17	0	19	0	0	1-8	1-8

SEE MITEK STANDARD DETAIL MSD2015-H FOR CONNECTION TO JOINT(S) C , D

PROVIDE ANCHORAGE AT BEARING JOINT C FOR 150 LBS FACTORED UPLIFT

UNFACTORED REACTIONS

JT	1ST LCASE COMBINED	MAX./MIN. COMPONENT REACTIONS SNOW	LIVE	PERM.LIVE	WIND	DEAD	SOIL
F	232	184 / 0	0 / 0	0 / 0	0 / 0	48 / 0	0 / 0
C	33	28 / -33	0 / 0	0 / 0	0 / 0	5 / 0	0 / 0
D	14	0 / 0	0 / 0	0 / 0	0 / 0	14 / 0	0 / 0

BEARING MATERIAL TO BE SPF NO.2 OR BETTER AT JOINT(S) F

BRACING
TOP CHORD TO BE SHEATHED OR MAX. PURLIN SPACING = 6.25 FT.
MAX. UNBRACED BOTTOM CHORD LENGTH = 10.00 FT OR RIGID CEILING DIRECTLY APPLIED.

ALL PITCH BREAKS AND PERIMETER CORNER JOINTS MUST BE LATERALLY RESTRAINED.

LOADING
TOTAL LOAD CASES: (5)

CHORDS

MEMB. FR-TO	MAX. FACTORED FORCE (LBS)	FACTORED VERT. LOAD LC1 (PLF) FROM	TO	MAX CSI (LC)	MAX. UNBRAC LENGTH
F- B	-319 / 0	0.0	0.0	0.03 (1)	7.81
A- B	0 / 50	-112.4	-112.4	0.15 (1)	10.00
B- C	-37 / 0	-112.4	-112.4	0.15 (1)	6.25
F- E	0 / 0	-18.5	-18.5	0.02 (4)	10.00
E- D	0 / 0	-18.5	-18.5	0.01 (4)	10.00

WEBS

MEMB. FR-TO	MAX. FACTORED FORCE (LBS)	MAX CSI (LC)
B- E	0 / 0	0.00 (1)

CANTILEVER ANALYSIS HAS BEEN CONSIDERED IN THIS DESIGN

DESIGN CRITERIA

SPECIFIED LOADS:

TOP CH.	LL	=	32.5	PSF
	DL	=	6.0	PSF
BOT CH.	LL	=	0.0	PSF
	DL	=	7.4	PSF
TOTAL LOAD		=	45.9	PSF

SPACING = 24.0 IN. C/C

THIS TRUSS IS DESIGNED FOR RESIDENTIAL OR SMALL BUILDING REQUIREMENTS OF PART 9, NBCC 2015

THIS DESIGN COMPLIES WITH:
- PART 9 OF BCBC 2018 , ABC 2019
- PART 9 OF OBC 2012 (2019 AMENDMENT)
- CSA 086-14
- TPIC 2014

DESIGN ASSUMPTIONS
-OVERHANG NOT TO BE ALTERED OR CUT OFF.

(55 % OF 43.9 P.S.F. G.S.L. PLUS 8.4 P.S.F. RAIN LOAD) EQUALS 32.5 P.S.F. SPECIFIED ROOF LIVE LOAD

ALLOWABLE DEFL.(LL)= L/360 (0.19")
CALCULATED VERT. DEFL.(LL) = L/ 999 (0.00")
ALLOWABLE DEFL.(TL)= L/360 (0.19")
CALCULATED VERT. DEFL.(TL) = L/ 999 (0.00")

CSI: TC=0.15/1.00 (A-B:1) , BC=0.02/1.00 (E-F:4) , WB=0.00/1.00 (B-E:1) , SSI=0.10/1.00 (B-C:1)

DOL LUMBER=1.00 NAIL=1.00 LS BEND=1.10 COMP=1.10 SHEAR=1.10 TENS= 1.10

COMPANION LIVE LOAD FACTOR = 1.00

AUTOSOLVE RIGHT HEEL ONLY

TRUSS PLATE MANUFACTURER IS NOT RESPONSIBLE FOR QUALITY CONTROL IN THE TRUSS MANUFACTURING PLANT .

NAIL VALUES

PLATE	GRIP(DRY) (PSI) MAX	MIN	SHEAR (PLI) MAX	MIN	SECTION (PLI) MAX	MIN
MT20	650	371	1747	788	1987	1873

PLATE PLACEMENT TOL. = 0.250 inches

PLATE ROTATION TOL. = 5.0 Deg.

JSI GRIP= 0.24 (B) (INPUT = 0.90)
JSI METAL= 0.06 (B) (INPUT = 1.00)

LICENSED PROFESSIONAL ENGINEER
06-24-22
H. J. G. ALVES
100009024
PROVINCE OF ONTARIO

Structural component only
DWG# T-2215299

REVIEWED

JOB NAME	TRUSS NAME	QUANTITY	PLY	JOB DESC.	DRWG NO.
423613	J21S	2	1	BAYVIEW WELLINGTON TRUSS DESC.	

Tamarack Roof Truss, Burlington

Version 8.530 S Feb 23 2022 MiTek Industries, Inc. Fri Jun 24 14:22:03 2022 Page 1
ID:c3jyj23uDijq_8pvRKbkZpy75XW-y?D1p0ZfGRR0Z_skB7jvy_L5nEJTa8q0G5w3Zbz338o

Scale = 1:25.4

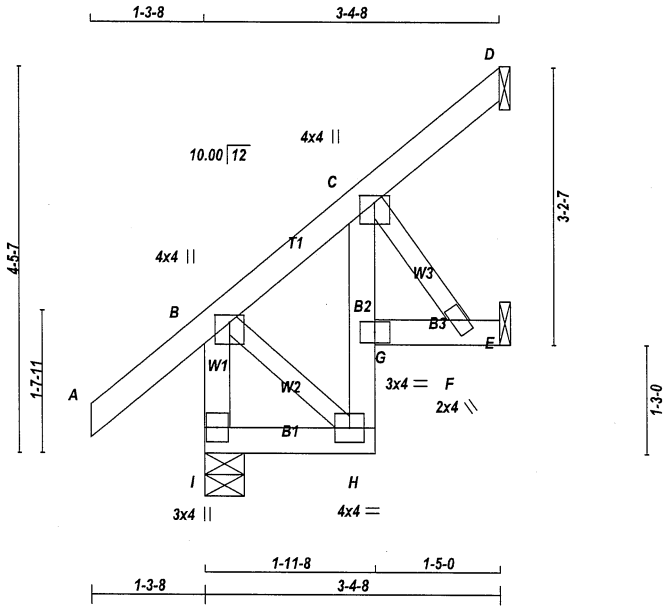

TOTAL WEIGHT = 2 X 18 = 37 lb
[M]

LUMBER
N. L. G. A. RULES

CHORDS	SIZE		LUMBER	DESCR.
I - B	2x4	DRY	No.2	SPF
A - D	2x4	DRY	No.2	SPF
I - H	2x4	DRY	No.2	SPF
H - C	2x4	DRY	No.2	SPF
G - E	2x4	DRY	No.2	SPF
ALL WEBS	2x3	DRY	No.2	SPF

DRY: SEASONED LUMBER.

PLATES (table is in inches)

JT	TYPE	PLATES	W	LEN	Y	X
B	TMVW+p	MT20	4.0	4.0	1.00	2.00
C	TMVW+p	MT20	4.0	4.0	1.00	2.00
F	BMW+w	MT20	2.0	4.0		
G	BVM-I	MT20	3.0	4.0		
H	BMVW-t	MT20	4.0	4.0		
I	BMV1+p	MT20	3.0	4.0		

NOTES- (1)
1) Lateral braces to be a minimum of 2X4 SPF #2.

DIMENSIONS, SUPPORTS AND LOADINGS SPECIFIED BY FABRICATOR TO BE VERIFIED BY BUILDING DESIGNER

BEARINGS

JT	FACTORED GROSS REACTION VERT	HORZ	MAXIMUM FACTORED GROSS REACTION DOWN	HORZ	UPLIFT	INPUT BRG IN-SX	REQRD BRG IN-SX
I	409	0	409	0	0	5-8	5-8
D	95	0	95	0	0	1-8	1-8
E	94	0	94	0	-12	1-8	1-8

SEE MITEK STANDARD DETAIL MSD2015-H FOR CONNECTION TO JOINT(S) D , E

PROVIDE ANCHORAGE AT BEARING JOINT E FOR 150 LBS FACTORED UPLIFT

UNFACTORED REACTIONS

JT	1ST LCASE COMBINED	MAX./MIN. COMPONENT REACTIONS SNOW	LIVE	PERM.LIVE	WIND	DEAD	SOIL
I	283	218 / 0	0 / 0	0 / 0	0 / 0	65 / 0	0 / 0
D	65	53 / 0	0 / 0	0 / 0	0 / 0	12 / 0	0 / 0
E	68	38 / -25	0 / 0	0 / 0	0 / 0	30 / 0	0 / 0

BEARING MATERIAL TO BE SPF NO.2 OR BETTER AT JOINT(S) I

BRACING
TOP CHORD TO BE SHEATHED OR MAX. PURLIN SPACING = 6.25 FT.
MAX. UNBRACED BOTTOM CHORD LENGTH = 6.25 FT OR RIGID CEILING DIRECTLY APPLIED.

ALL PITCH BREAKS AND PERIMETER CORNER JOINTS MUST BE LATERALLY RESTRAINED.

LOADING
TOTAL LOAD CASES: (5)

CHORDS

MEMB. FR-TO	MAX. FACTORED FORCE (LBS)	FACTORED VERT. LOAD (PLF) FROM	TO	LC1 MAX CSI (LC)	MAX. UNBRAC LENGTH
I- B	-392 / 0	0.0	0.0	0.04 (1)	7.81
A- B	0 / 50	-112.4	-112.4	0.16 (5)	10.00
B- C	-100 / 0	-112.4	-112.4	0.15 (5)	6.25
C- D	0 / 8	-112.4	-112.4	0.06 (1)	10.00
I- H	0 / 0	-18.5	-18.5	0.02 (4)	10.00
H- G	-15 / 21	0.0	0.0	0.08 (1)	7.81
G- C	0 / 35	0.0	0.0	0.08 (1)	10.00
G- F	-22 / 79	-18.5	-18.5	0.07 (1)	6.25
F- E	0 / 0	-18.5	-18.5	0.06 (1)	10.00

WEBS

MEMB. FR-TO	MAX. FACTORED FORCE (LBS)	MAX CSI (LC)
B- H	-15 / 54	0.01 (1)
C- F	-138 / 39	0.02 (1)

CANTILEVER ANALYSIS HAS BEEN CONSIDERED IN THIS DESIGN

DESIGN CRITERIA

SPECIFIED LOADS:

TOP CH.	LL	=	32.5	PSF
	DL	=	6.0	PSF
BOT CH.	LL	=	0.0	PSF
	DL	=	7.4	PSF
TOTAL LOAD		=	45.9	PSF

SPACING = 24.0 IN. C/C

THIS TRUSS IS DESIGNED FOR RESIDENTIAL OR SMALL BUILDING REQUIREMENTS OF PART 9, NBCC 2015

THIS DESIGN COMPLIES WITH:
- PART 9 OF BCBC 2018 , ABC 2019
- PART 9 OF OBC 2012 (2019 AMENDMENT)
- CSA 086-14
- TPIC 2014

DESIGN ASSUMPTIONS
-OVERHANG NOT TO BE ALTERED OR CUT OFF.

(55 % OF 43.9 P.S.F. G.S.L. PLUS 8.4 P.S.F. RAIN LOAD) EQUALS 32.5 P.S.F. SPECIFIED ROOF LIVE LOAD

ALLOWABLE DEFL.(LL)= L/360 (0.19")
CALCULATED VERT. DEFL.(LL) = L/ 999 (0.00")
ALLOWABLE DEFL.(TL)= L/360 (0.19")
CALCULATED VERT. DEFL.(TL) = L/ 999 (0.01")

CSI: TC=0.16/1.00 (A-B:5) , BC=0.08/1.00 (C-G:1) , WB=0.02/1.00 (C-F:1) , SSI=0.10/1.00 (B-C:1)

DOL LUMBER=1.00 NAIL=1.00 LS BEND=1.10 COMP=1.10 SHEAR=1.10 TENS= 1.10

COMPANION LIVE LOAD FACTOR = 1.00

TRUSS PLATE MANUFACTURER IS NOT RESPONSIBLE FOR QUALITY CONTROL IN THE TRUSS MANUFACTURING PLANT .

NAIL VALUES

PLATE	GRIP(DRY) (PSI) MAX	MIN	SHEAR (PLI) MAX	MIN	SECTION (PLI) MAX	MIN
MT20	650	371	1747	788	1987	1873

PLATE PLACEMENT TOL. = 0.250 inches

PLATE ROTATION TOL. = 5.0 Deg.

JSI GRIP= 0.28 (B) (INPUT = 0.90)
JSI METAL= 0.08 (B) (INPUT = 1.00)

LICENSED PROFESSIONAL ENGINEER
06-24-22
H. J. G. ALVES
100009024
PROVINCE OF ONTARIO

Structural component only
DWG# T-2215300

REVIEWED

JOB NAME	TRUSS NAME	QUANTITY	PLY	JOB DESC.	DRWG NO.
423616	J30	1	1	BAYVIEW WELLINGTON TRUSS DESC.	

Tamarack Roof Truss, Burlington

Version 8.530 S Feb 23 2022 MiTek Industries, Inc. Fri Jun 24 14:54:54 2022 Page 1
ID:c3jyj23uDijq_8pvRKbkZpy75XW-lBp9TzP?51lLWu1Y9Za6LeTqfl_WuZ57VFttGrz32g?

Scale = 1:27.4

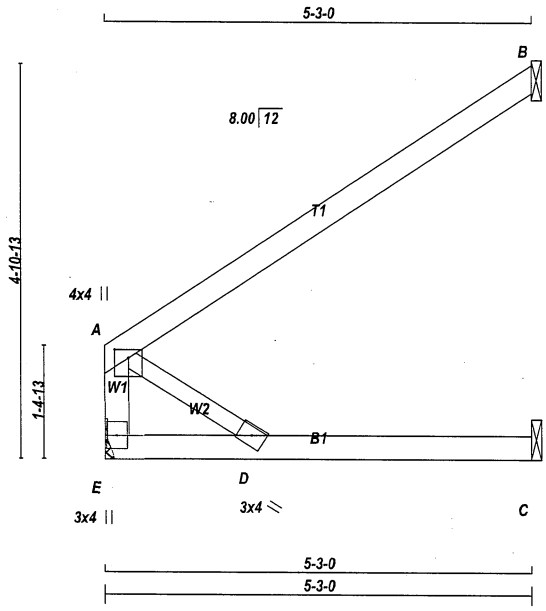

TOTAL WEIGHT = 16 lb

[M][F]

LUMBER
N. L. G. A. RULES

CHORDS	SIZE		LUMBER	DESCR.
E - A	2x4	DRY	No.2	SPF
A - B	2x4	DRY	No.2	SPF
E - C	2x4	DRY	No.2	SPF
ALL WEBS	2x3	DRY	No.2	SPF

DRY: SEASONED LUMBER.

PLATES (table is in inches)

JT	TYPE	PLATES	W	LEN	Y	X
A	TMVW+p	MT20	4.0	4.0	1.25	2.00
D	BMW+w	MT20	3.0	4.0		
E	BMV1+p	MT20	3.0	4.0		

NOTES- (1)
1) Lateral braces to be a minimum of 2X4 SPF #2.

DIMENSIONS, SUPPORTS AND LOADINGS SPECIFIED BY FABRICATOR TO BE VERIFIED BY BUILDING DESIGNER

BEARINGS

JT	FACTORED GROSS REACTION VERT	HORZ	MAXIMUM FACTORED GROSS REACTION DOWN	HORZ	UPLIFT	INPUT BRG IN-SX	REQRD BRG IN-SX
E	344	0	344	0	0	MECHANICAL	
B	295	0	295	0	0	1-8	1-8
C	49	0	54	0	0	1-8	1-8

A SUITABLE HANGER/MECHANICAL CONNECTION IS REQUIRED AT JOINT E. MINIMUM BEARING LENGTH AT JOINT E = 1-8.

SEE MITEK STANDARD DETAIL MSD2015-H FOR CONNECTION TO JOINT(S) B , C

UNFACTORED REACTIONS

JT	1ST LCASE COMBINED	MAX./MIN. COMPONENT REACTIONS SNOW	LIVE	PERM.LIVE	WIND	DEAD	SOIL
E	241	171 / 0	0 / 0	0 / 0	0 / 0	70 / 0	0 / 0
B	202	171 / 0	0 / 0	0 / 0	0 / 0	31 / 0	0 / 0
C	39	0 / 0	0 / 0	0 / 0	0 / 0	39 / 0	0 / 0

BRACING
TOP CHORD TO BE SHEATHED OR MAX. PURLIN SPACING = 10.00 FT.
MAX. UNBRACED BOTTOM CHORD LENGTH = 10.00 FT OR RIGID CEILING DIRECTLY APPLIED.

ALL PITCH BREAKS AND PERIMETER CORNER JOINTS MUST BE LATERALLY RESTRAINED.

LOADING
TOTAL LOAD CASES: (4)

CHORDS

MEMB. FR-TO	MAX. FACTORED FORCE (LBS)	FACTORED VERT. LOAD (PLF) FROM	TO	LC1 CSI (LC)	MAX UNBRAC LENGTH
E- A	-295 / 0	0.0	0.0	0.03 (1)	7.81
A- B	0 / 0	-112.4	-112.4	0.53 (1)	10.00
E- D	0 / 0	-18.5	-18.5	0.13 (4)	10.00
D- C	0 / 0	-18.5	-18.5	0.15 (4)	10.00

WEBS

MEMB. FR-TO	MAX. FACTORED FORCE (LBS)	MAX CSI (LC)
A- D	0 / 0	0.00 (1)

DESIGN CRITERIA

SPECIFIED LOADS:

TOP CH.	LL =	32.5	PSF
	DL =	6.0	PSF
BOT CH.	LL =	0.0	PSF
	DL =	7.4	PSF
TOTAL LOAD	=	45.9	PSF

SPACING = 24.0 IN. C/C

THIS TRUSS IS DESIGNED FOR RESIDENTIAL OR SMALL BUILDING REQUIREMENTS OF PART 9, NBCC 2015

THIS DESIGN COMPLIES WITH:
- PART 9 OF BCBC 2018 , ABC 2019
- PART 9 OF OBC 2012 (2019 AMENDMENT)
- CSA 086-14
- TPIC 2014

(55 % OF 43.9 P.S.F. G.S.L. PLUS 8.4 P.S.F. RAIN LOAD) EQUALS 32.5 P.S.F. SPECIFIED ROOF LIVE LOAD

ALLOWABLE DEFL.(LL)= L/360 (0.19")
CALCULATED VERT. DEFL.(LL) = L/ 999 (0.00")
ALLOWABLE DEFL.(TL)= L/360 (0.19")
CALCULATED VERT. DEFL.(TL) = L/ 999 (0.03")

CSI: TC=0.53/1.00 (A-B:1) , BC=0.15/1.00 (C-D:4) , WB=0.00/1.00 (A-D:1) , SSI=0.19/1.00 (A-B:1)

DOL LUMBER=1.00 NAIL=1.00 LS BEND=1.10 COMP=1.10 SHEAR=1.10 TENS= 1.10

COMPANION LIVE LOAD FACTOR = 1.00

TRUSS PLATE MANUFACTURER IS NOT RESPONSIBLE FOR QUALITY CONTROL IN THE TRUSS MANUFACTURING PLANT .

NAIL VALUES

PLATE	GRIP(DRY) (PSI) MAX	MIN	SHEAR (PLI) MAX	MIN	SECTION (PLI) MAX	MIN
MT20	650	371	1747	788	1987	1873

PLATE PLACEMENT TOL. = 0.250 inches

PLATE ROTATION TOL. = 5.0 Deg.

JSI GRIP= 0.20 (A) (INPUT = 0.90)
JSI METAL= 0.06 (A) (INPUT = 1.00)

LICENSED PROFESSIONAL ENGINEER
06-24-22
H. J. G. ALVES
100009024
PROVINCE OF ONTARIO

Structural component only
DWG# T-2215309

REVIEWED

JOB NAME	TRUSS NAME	QUANTITY	PLY	JOB DESC.	DRWG NO.
423616	J31	1	1	BAYVIEW WELLINGTON TRUSS DESC.	

Tamarack Roof Truss, Burlington

Version 8.530 S Feb 23 2022 MiTek Industries, Inc. Fri Jun 24 14:54:54 2022 Page 1
ID:c3jyj23uDijq_8pvRKbkZpy75XW-lBp9TzP?51ILWu1Y9Za6LeTucl_WuZ57VFttGrz32g?

Scale = 1:22.4

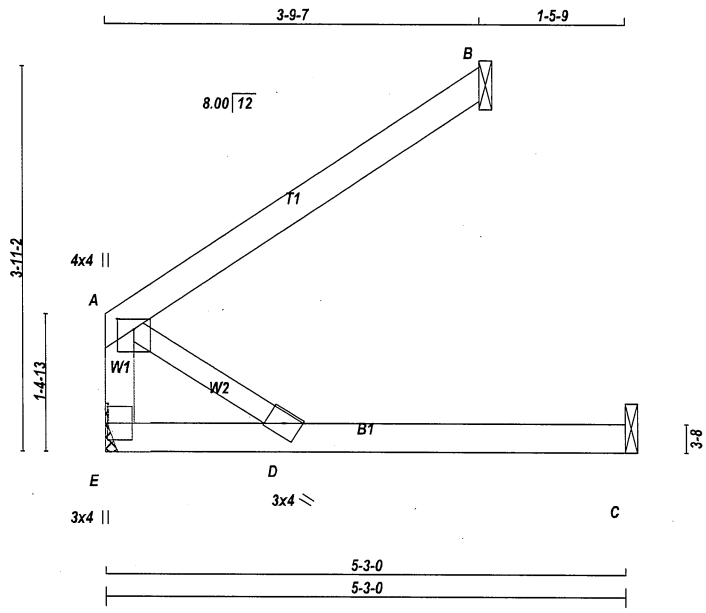

TOTAL WEIGHT = 14 lb

LUMBER
N. L. G. A. RULES

CHORDS	SIZE		LUMBER	DESCR.
E - A	2x4	DRY	No.2	SPF
A - B	2x4	DRY	No.2	SPF
E - C	2x4	DRY	No.2	SPF
ALL WEBS	2x3	DRY	No.2	SPF

DRY: SEASONED LUMBER.

PLATES (table is in inches)

JT	TYPE	PLATES	W	LEN	Y	X
A	TMVW+p	MT20	4.0	4.0	1.25	2.00
D	BMW+w	MT20	3.0	4.0		
E	BMV1+p	MT20	3.0	4.0		

NOTES- (1)
1) Lateral braces to be a minimum of 2X4 SPF #2.

DIMENSIONS, SUPPORTS AND LOADINGS SPECIFIED BY FABRICATOR TO BE VERIFIED BY BUILDING DESIGNER

BEARINGS

JT	FACTORED GROSS REACTION VERT	HORZ	MAXIMUM FACTORED GROSS REACTION DOWN	HORZ	UPLIFT	INPUT BRG IN-SX	REQRD BRG IN-SX
E	261	0	261	0	0	MECHANICAL	
B	213	0	213	0	0	1-8	1-8
C	49	0	54	0	0	1-8	1-8

A SUITABLE HANGER/MECHANICAL CONNECTION IS REQUIRED AT JOINT E. MINIMUM BEARING LENGTH AT JOINT E = 1-8.

SEE MITEK STANDARD DETAIL MSD2015-H FOR CONNECTION TO JOINT(S) B , C

UNFACTORED REACTIONS

JT	1ST LCASE COMBINED	MAX./MIN. COMPONENT REACTIONS SNOW	LIVE	PERM.LIVE	WIND	DEAD	SOIL
E	185	123 / 0	0 / 0	0 / 0	0 / 0	62 / 0	0 / 0
B	146	123 / 0	0 / 0	0 / 0	0 / 0	23 / 0	0 / 0
C	39	0 / 0	0 / 0	0 / 0	0 / 0	39 / 0	0 / 0

BRACING
TOP CHORD TO BE SHEATHED OR MAX. PURLIN SPACING = 10.00 FT.
MAX. UNBRACED BOTTOM CHORD LENGTH = 10.00 FT OR RIGID CEILING DIRECTLY APPLIED.

ALL PITCH BREAKS AND PERIMETER CORNER JOINTS MUST BE LATERALLY RESTRAINED.

LOADING
TOTAL LOAD CASES: (4)

CHORDS

MEMB. FR-TO	MAX. FACTORED FORCE (LBS)	FACTORED VERT. LOAD (PLF) FROM	TO	LC1 CSI (LC)	MAX UNBRAC LENGTH
E- A	-213 / 0	0.0	0.0	0.02 (1)	7.81
A- B	0 / 0	-112.4	-112.4	0.27 (1)	10.00
E- D	0 / 0	-18.5	-18.5	0.13 (4)	10.00
D- C	0 / 0	-18.5	-18.5	0.15 (4)	10.00

WEBS

MEMB. FR-TO	MAX. FACTORED FORCE (LBS)	MAX CSI (LC)
A- D	0 / 0	0.00 (1)

DESIGN CRITERIA

SPECIFIED LOADS:

TOP CH.	LL =	32.5	PSF
	DL =	6.0	PSF
BOT CH.	LL =	0.0	PSF
	DL =	7.4	PSF
TOTAL LOAD	=	45.9	PSF

SPACING = 24.0 IN. C/C

THIS TRUSS IS DESIGNED FOR RESIDENTIAL OR SMALL BUILDING REQUIREMENTS OF PART 9, NBCC 2015

THIS DESIGN COMPLIES WITH:
- PART 9 OF BCBC 2018 , ABC 2019
- PART 9 OF OBC 2012 (2019 AMENDMENT)
- CSA 086-14
- TPIC 2014

(55 % OF 43.9 P.S.F. G.S.L. PLUS 8.4 P.S.F. RAIN LOAD) EQUALS 32.5 P.S.F. SPECIFIED ROOF LIVE LOAD

ALLOWABLE DEFL.(LL)= L/360 (0.19")
CALCULATED VERT. DEFL.(LL) = L/ 999 (0.00")
ALLOWABLE DEFL.(TL)= L/360 (0.19")
CALCULATED VERT. DEFL.(TL) = L/ 999 (0.03")

CSI: TC=0.27/1.00 (A-B:1) , BC=0.15/1.00 (C-D:4) , WB=0.00/1.00 (A-B:1) , SSI=0.14/1.00 (A-B:1)

DOL LUMBER=1.00 NAIL=1.00 LS BEND=1.10 COMP=1.10 SHEAR=1.10 TENS= 1.10

COMPANION LIVE LOAD FACTOR = 1.00

TRUSS PLATE MANUFACTURER IS NOT RESPONSIBLE FOR QUALITY CONTROL IN THE TRUSS MANUFACTURING PLANT .

NAIL VALUES

PLATE	GRIP(DRY) (PSI) MAX	MIN	SHEAR (PLI) MAX	MIN	SECTION (PLI) MAX	MIN
MT20	650	371	1747	788	1987	1873

PLATE PLACEMENT TOL. = 0.250 inches

PLATE ROTATION TOL. = 5.0 Deg.

JSI GRIP= 0.14 (A) (INPUT = 0.90)
JSI METAL= 0.04 (A) (INPUT = 1.00)

LICENSED PROFESSIONAL ENGINEER
06-24-22
H. J. G. ALVES
100009024
PROVINCE OF ONTARIO

Structural component only
DWG# T-2215310

REVIEWED

JOB NAME	TRUSS NAME	QUANTITY	PLY	JOB DESC.	DRWG NO.
423616	J32	1	1	BAYVIEW WELLINGTON TRUSS DESC.	

Tamarack Roof Truss, Burlington

Version 8.530 S Feb 23 2022 MiTek Industries, Inc. Fri Jun 24 14:54:55 2022 Page 1
ID:c3jyj23uDijq_8pvRKbkZpy75XW-DONXhJQdsKuC82cliH5Lur06e9Kld0LGkvcQoHz32g_

Scale = 1:15.7

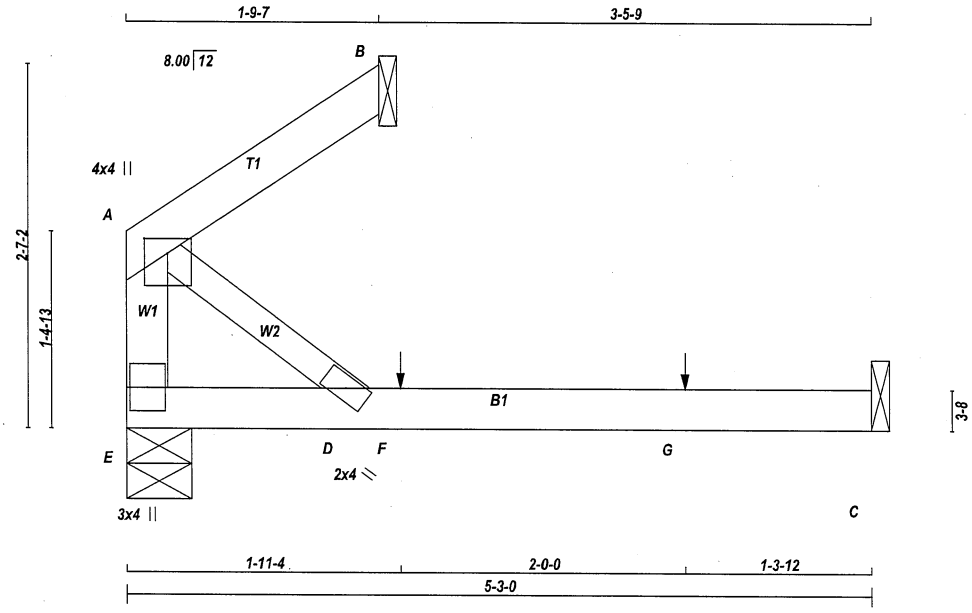

TOTAL WEIGHT = 11 lb

[M][F]

LUMBER
N. L. G. A. RULES

CHORDS	SIZE		LUMBER	DESCR.
E - A	2x4	DRY	No.2	SPF
A - B	2x4	DRY	No.2	SPF
E - C	2x4	DRY	No.2	SPF
ALL WEBS	2x3	DRY	No.2	SPF

DRY: SEASONED LUMBER.

PLATES (table is in inches)

JT	TYPE	PLATES	W	LEN	Y	X
A	TMVW+p	MT20	4.0	4.0	1.25	2.00
D	BMW+w	MT20	2.0	4.0		
E	BMV1+p	MT20	3.0	4.0		

NOTES- (1)
1) Lateral braces to be a minimum of 2X4 SPF #2.

DIMENSIONS, SUPPORTS AND LOADINGS SPECIFIED BY FABRICATOR TO BE VERIFIED BY BUILDING DESIGNER

BEARINGS

JT	FACTORED GROSS REACTION VERT	HORZ	MAXIMUM FACTORED GROSS REACTION DOWN	HORZ	UPLIFT	INPUT BRG IN-SX	REQRD BRG IN-SX
E	149	0	149	0	0	5-8	5-8
B	100	0	100	0	0	1-8	1-8
C	49	0	54	0	0	1-8	1-8

SEE MITEK STANDARD DETAIL MSD2015-H FOR CONNECTION TO JOINT(S) B , C

UNFACTORED REACTIONS

JT	1ST LCASE COMBINED	MAX./MIN. COMPONENT REACTIONS SNOW	LIVE	PERM.LIVE	WIND	DEAD	SOIL
E	108	58 / 0	0 / 0	0 / 0	0 / 0	50 / 0	0 / 0
B	69	58 / 0	0 / 0	0 / 0	0 / 0	11 / 0	0 / 0
C	39	0 / 0	0 / 0	0 / 0	0 / 0	39 / 0	0 / 0

BEARING MATERIAL TO BE SPF NO.2 OR BETTER AT JOINT(S) E, B

BRACING
TOP CHORD TO BE SHEATHED OR MAX. PURLIN SPACING = 10.00 FT.
MAX. UNBRACED BOTTOM CHORD LENGTH = 10.00 FT OR RIGID CEILING DIRECTLY APPLIED.

ALL PITCH BREAKS AND PERIMETER CORNER JOINTS MUST BE LATERALLY RESTRAINED.

LOADING
TOTAL LOAD CASES: (4)

CHORDS

MEMB. FR-TO	MAX. FACTORED FORCE (LBS)	FACTORED VERT. LOAD (PLF) FROM	TO	LC1	MAX CSI (LC)	MAX. UNBRAC LENGTH
E- A	-100 / 0	0.0	0.0	0.01 (1)	7.81	
A- B	0 / 0	-112.4	-112.4	0.06 (1)	10.00	
E- D	0 / 0	-18.5	-18.5	0.12 (4)	10.00	
D- F	0 / 0	-18.5	-18.5	0.15 (4)	10.00	
F- G	0 / 0	-18.5	-18.5	0.15 (4)	10.00	
G- C	0 / 0	-18.5	-18.5	0.15 (4)	10.00	

WEBS

MEMB. FR-TO	MAX. FACTORED FORCE (LBS)	MAX CSI (LC)
A- D	0 / 0	0.00 (1)

SPECIFIED CONCENTRATED LOADS (LBS)

JT	LOC.	LC1	MAX-	MAX+	FACE	DIR.	TYPE	HEEL	CONN.
F	1-11-4	1	1	---	FRONT	VERT	TOTAL	---	C1
G	3-11-4	1	1	---	FRONT	VERT	TOTAL	---	C1

CONNECTION REQUIREMENTS

1) **C1:** A SUITABLE HANGER/MECHANICAL CONNECTION IS REQUIRED.

DESIGN CRITERIA

SPECIFIED LOADS:

TOP CH.	LL	=	32.5	PSF
	DL	=	6.0	PSF
BOT CH.	LL	=	0.0	PSF
	DL	=	7.4	PSF
TOTAL LOAD		=	45.9	PSF

SPACING = 24.0 IN. C/C

THIS TRUSS IS DESIGNED FOR RESIDENTIAL OR SMALL BUILDING REQUIREMENTS OF PART 9, NBCC 2015

THIS DESIGN COMPLIES WITH:
- PART 9 OF BCBC 2018 , ABC 2019
- PART 9 OF OBC 2012 (2019 AMENDMENT)
- CSA 086-14
- TPIC 2014

(55 % OF 43.9 P.S.F. G.S.L. PLUS 8.4 P.S.F. RAIN LOAD) EQUALS 32.5 P.S.F. SPECIFIED ROOF LIVE LOAD

ALLOWABLE DEFL.(LL)= L/360 (0.19")
CALCULATED VERT. DEFL.(LL) = L/ 999 (0.00")
ALLOWABLE DEFL.(TL)= L/360 (0.19")
CALCULATED VERT. DEFL.(TL) = L/ 999 (0.03")

CSI: TC=0.06/1.00 (A-B:1) , BC=0.15/1.00 (C-D:4) , WB=0.00/1.00 (A-D:1) , SSI=0.07/1.00 (A-B:1)

DOL LUMBER=0.94 NAIL=0.94 LS BEND=1.10 COMP=1.10 SHEAR=1.10 TENS= 1.10

COMPANION LIVE LOAD FACTOR = 1.00

TRUSS PLATE MANUFACTURER IS NOT RESPONSIBLE FOR QUALITY CONTROL IN THE TRUSS MANUFACTURING PLANT .

NAIL VALUES

PLATE	GRIP(DRY) (PSI) MAX	MIN	SHEAR (PLI) MAX	MIN	SECTION (PLI) MAX	MIN
MT20	650	371	1747	788	1987	1873

PLATE PLACEMENT TOL. = 0.250 inches

PLATE ROTATION TOL. = 5.0 Deg.

JSI GRIP= 0.07 (A) (INPUT = 0.90)
JSI METAL= 0.02 (A) (INPUT = 1.00)

LICENSED PROFESSIONAL ENGINEER
06-24-22
H. J. G. ALVES
100009024
PROVINCE OF ONTARIO

Structural component only
DWG# T-2215311

REVIEWED

JOB NAME	TRUSS NAME	QUANTITY	PLY	JOB DESC.	DRWG NO.
423616	J33	1	1	BAYVIEW WELLINGTON TRUSS DESC.	

Tamarack Roof Truss, Burlington

Version 8.530 S Feb 23 2022 MiTek Industries, Inc. Fri Jun 24 14:54:56 2022 Page 1
ID:c3jyj23uDijq_8pvRKbkZpy75XW-haxvufRFde03mCBxG_caQ3ZE6Zi?MTbQyZM_Jkz32fz

Scale = 1:22.9

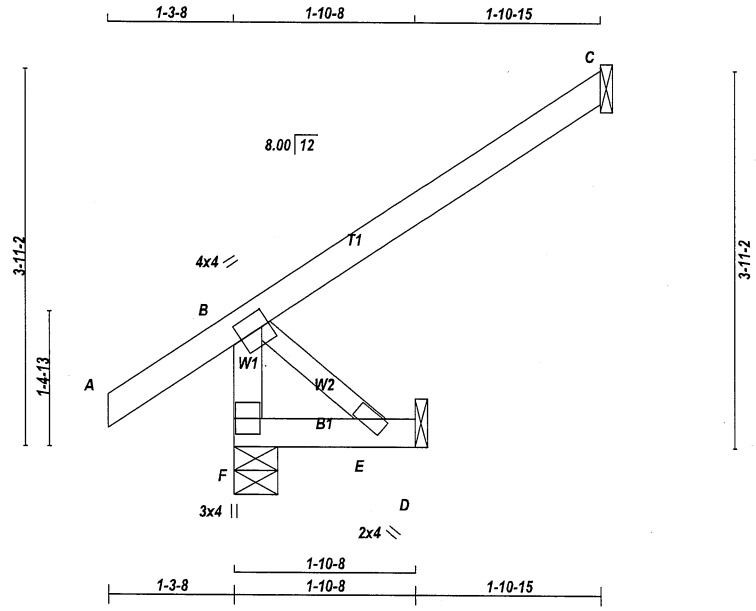

TOTAL WEIGHT = 12 lb
[M]

LUMBER
N. L. G. A. RULES

CHORDS	SIZE		LUMBER	DESCR.
F - B	2x4	DRY	No.2	SPF
A - C	2x4	DRY	No.2	SPF
F - D	2x4	DRY	No.2	SPF
ALL WEBS	2x3	DRY	No.2	SPF

DRY: SEASONED LUMBER.

PLATES (table is in inches)

JT	TYPE	PLATES	W	LEN	Y	X
B	TMVW-t	MT20	4.0	4.0	2.00	1.00
E	BMW+w	MT20	2.0	4.0		
F	BMV1+p	MT20	3.0	4.0		

NOTES- (1)
1) Lateral braces to be a minimum of 2X4 SPF #2.

DIMENSIONS, SUPPORTS AND LOADINGS SPECIFIED BY FABRICATOR TO BE VERIFIED BY BUILDING DESIGNER

BEARINGS

JT	FACTORED GROSS REACTION VERT	HORZ	MAXIMUM FACTORED GROSS REACTION DOWN	HORZ	UPLIFT	INPUT BRG IN-SX	REQRD BRG IN-SX
F	385	0	385	0	0	5-8	5-8
C	213	0	213	0	0	1-8	1-8
D	17	0	19	0	0	1-8	1-8

SEE MITEK STANDARD DETAIL MSD2015-H FOR CONNECTION TO JOINT(S) C , D

UNFACTORED REACTIONS

JT	1ST LCASE COMBINED	MAX./MIN. COMPONENT REACTIONS SNOW	LIVE	PERM.LIVE	WIND	DEAD	SOIL
F	265	212 / 0	0 / 0	0 / 0	0 / 0	53 / 0	0 / 0
C	146	123 / 0	0 / 0	0 / 0	0 / 0	23 / 0	0 / 0
D	14	0 / 0	0 / 0	0 / 0	0 / 0	14 / 0	0 / 0

BEARING MATERIAL TO BE SPF NO.2 OR BETTER AT JOINT(S) F

BRACING
TOP CHORD TO BE SHEATHED OR MAX. PURLIN SPACING = 10.00 FT.
MAX. UNBRACED BOTTOM CHORD LENGTH = 10.00 FT OR RIGID CEILING DIRECTLY APPLIED.

ALL PITCH BREAKS AND PERIMETER CORNER JOINTS MUST BE LATERALLY RESTRAINED.

LOADING
TOTAL LOAD CASES: (5)

CHORDS MEMB. FR-TO	MAX. FACTORED FORCE (LBS)	FACTORED VERT. LOAD (PLF) FROM	TO	LC1 MAX CSI (LC)	MAX. UNBRAC LENGTH	WEBS MEMB. FR-TO	MAX. FACTORED FORCE (LBS)	MAX CSI (LC)
F- B	-367 / 0	0.0	0.0	0.04 (1)	7.81	B- E	0 / 0	0.00 (1)
A- B	0 / 43	-112.4	-112.4	0.15 (1)	10.00			
B- C	0 / 0	-112.4	-112.4	0.27 (1)	10.00			
F- E	0 / 0	-18.5	-18.5	0.02 (4)	10.00			
E- D	0 / 0	-18.5	-18.5	0.01 (4)	10.00			

CANTILEVER ANALYSIS HAS BEEN CONSIDERED IN THIS DESIGN

DESIGN CRITERIA

SPECIFIED LOADS:

TOP CH.	LL	=	32.5	PSF
	DL	=	6.0	PSF
BOT CH.	LL	=	0.0	PSF
	DL	=	7.4	PSF
TOTAL LOAD		=	45.9	PSF

SPACING = 24.0 IN. C/C

THIS TRUSS IS DESIGNED FOR RESIDENTIAL OR SMALL BUILDING REQUIREMENTS OF PART 9, NBCC 2015

THIS DESIGN COMPLIES WITH:
- PART 9 OF BCBC 2018 , ABC 2019
- PART 9 OF OBC 2012 (2019 AMENDMENT)
- CSA 086-14
- TPIC 2014

(55 % OF 43.9 P.S.F. G.S.L. PLUS 8.4 P.S.F. RAIN LOAD) EQUALS 32.5 P.S.F. SPECIFIED ROOF LIVE LOAD

ALLOWABLE DEFL.(LL)= L/360 (0.19")
CALCULATED VERT. DEFL.(LL) = L/ 999 (0.00")
ALLOWABLE DEFL.(TL)= L/360 (0.19")
CALCULATED VERT. DEFL.(TL) = L/ 999 (0.00")

CSI: TC=0.27/1.00 (B-C:1) , BC=0.02/1.00 (E-F:4) , WB=0.00/1.00 (B-E:1) , SSI=0.14/1.00 (B-C:1)

DOL LUMBER=1.00 NAIL=1.00 LS BEND=1.10 COMP=1.10 SHEAR=1.10 TENS= 1.10

COMPANION LIVE LOAD FACTOR = 1.00

AUTOSOLVE RIGHT HEEL ONLY

TRUSS PLATE MANUFACTURER IS NOT RESPONSIBLE FOR QUALITY CONTROL IN THE TRUSS MANUFACTURING PLANT .

NAIL VALUES

PLATE	GRIP(DRY) (PSI) MAX	MIN	SHEAR (PLI) MAX	MIN	SECTION (PLI) MAX	MIN
MT20	650	371	1747	788	1987	1873

PLATE PLACEMENT TOL. = 0.250 inches

PLATE ROTATION TOL. = 5.0 Deg.

JSI GRIP= 0.22 (B) (INPUT = 0.90)
JSI METAL= 0.07 (B) (INPUT = 1.00)

LICENSED PROFESSIONAL ENGINEER
06-24-22
H. J. G. ALVES
100009024
PROVINCE OF ONTARIO

Structural component only
DWG# T-2215312

REVIEWED

JOB NAME	TRUSS NAME	QUANTITY	PLY	JOB DESC.	DRWG NO.
423616	J34	1	1	BAYVIEW WELLINGTON TRUSS DESC.	

Tamarack Roof Truss, Burlington

Version 8.530 S Feb 23 2022 MiTek Industries, Inc. Fri Jun 24 14:54:57 2022 Page 1
ID:c3jyj23uDijq_8pvRKbkZpy75XW-9mVl6?StOy8wOMm7qi7pzG5Rnz2E5wrZBD5XrAz32fy

Scale: 3/4"=1'

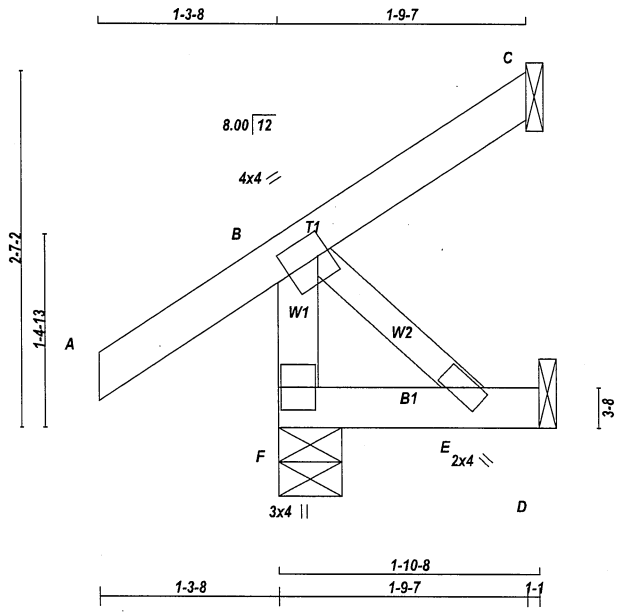

TOTAL WEIGHT = 9 lb
[M]

LUMBER
N. L. G. A. RULES

CHORDS	SIZE		LUMBER	DESCR.
F - B	2x4	DRY	No.2	SPF
A - C	2x4	DRY	No.2	SPF
F - D	2x4	DRY	No.2	SPF
ALL WEBS	2x3	DRY	No.2	SPF

DRY: SEASONED LUMBER.

PLATES (table is in inches)

JT	TYPE	PLATES	W	LEN	Y	X
B	TMVW-t	MT20	4.0	4.0	2.00	1.00
E	BMW+w	MT20	2.0	4.0		
F	BMV1+p	MT20	3.0	4.0		

NOTES- (1)
1) Lateral braces to be a minimum of 2X4 SPF #2.

DIMENSIONS, SUPPORTS AND LOADINGS SPECIFIED BY FABRICATOR TO BE VERIFIED BY BUILDING DESIGNER

BEARINGS

JT	FACTORED GROSS REACTION VERT	HORZ	MAXIMUM FACTORED GROSS REACTION DOWN	HORZ	UPLIFT	INPUT BRG IN-SX	REQRD BRG IN-SX
F	331	0	331	0	0	5-8	5-8
C	41	0	41	0	-50	1-8	1-8
D	17	0	19	0	0	1-8	1-8

SEE MITEK STANDARD DETAIL MSD2015-H FOR CONNECTION TO JOINT(S) C , D

PROVIDE ANCHORAGE AT BEARING JOINT C FOR 150 LBS FACTORED UPLIFT

UNFACTORED REACTIONS

JT	1ST LCASE COMBINED	MAX./MIN. COMPONENT REACTIONS SNOW	LIVE	PERM.LIVE	WIND	DEAD	SOIL
F	229	181 / 0	0 / 0	0 / 0	0 / 0	47 / 0	0 / 0
C	28	24 / -34	0 / 0	0 / 0	0 / 0	4 / 0	0 / 0
D	14	0 / 0	0 / 0	0 / 0	0 / 0	14 / 0	0 / 0

BEARING MATERIAL TO BE SPF NO.2 OR BETTER AT JOINT(S) F, C

BRACING
TOP CHORD TO BE SHEATHED OR MAX. PURLIN SPACING = 6.25 FT.
MAX. UNBRACED BOTTOM CHORD LENGTH = 10.00 FT OR RIGID CEILING DIRECTLY APPLIED.

ALL PITCH BREAKS AND PERIMETER CORNER JOINTS MUST BE LATERALLY RESTRAINED.

LOADING
TOTAL LOAD CASES: (5)

CHORDS

MEMB. FR-TO	MAX. FACTORED FORCE (LBS)	FACTORED VERT. LOAD (PLF) FROM	TO	LC1 MAX CSI (LC)	MAX. UNBRAC LENGTH
F- B	-314 / 0	0.0	0.0	0.03 (1)	7.81
A- B	0 / 43	-112.4	-112.4	0.15 (1)	10.00
B- C	-33 / 0	-112.4	-112.4	0.14 (1)	6.25
F- E	0 / 0	-18.5	-18.5	0.02 (4)	10.00
E- D	0 / 0	-18.5	-18.5	0.02 (4)	10.00

WEBS

MEMB. FR-TO	MAX. FACTORED FORCE (LBS)	MAX CSI (LC)
B- E	0 / 0	0.00 (1)

CANTILEVER ANALYSIS HAS BEEN CONSIDERED IN THIS DESIGN

DESIGN CRITERIA

SPECIFIED LOADS:

TOP CH.	LL	=	32.5	PSF
	DL	=	6.0	PSF
BOT CH.	LL	=	0.0	PSF
	DL	=	7.4	PSF
TOTAL LOAD		=	45.9	PSF

SPACING = 24.0 IN. C/C

THIS TRUSS IS DESIGNED FOR RESIDENTIAL OR SMALL BUILDING REQUIREMENTS OF PART 9, NBCC 2015

THIS DESIGN COMPLIES WITH:
- PART 9 OF BCBC 2018 , ABC 2019
- PART 9 OF OBC 2012 (2019 AMENDMENT)
- CSA 086-14
- TPIC 2014

DESIGN ASSUMPTIONS
-OVERHANG NOT TO BE ALTERED OR CUT OFF.

(55 % OF 43.9 P.S.F. G.S.L. PLUS 8.4 P.S.F. RAIN LOAD) EQUALS 32.5 P.S.F. SPECIFIED ROOF LIVE LOAD

ALLOWABLE DEFL.(LL)= L/360 (0.19")
CALCULATED VERT. DEFL.(LL) = L/ 999 (0.00")
ALLOWABLE DEFL.(TL)= L/360 (0.19")
CALCULATED VERT. DEFL.(TL) = L/ 999 (0.00")

CSI: TC=0.15/1.00 (A-B:1) , BC=0.02/1.00 (E-F:4) , WB=0.00/1.00 (B-E:1) , SSI=0.10/1.00 (B-C:1)

DOL LUMBER=1.00 NAIL=1.00 LS BEND=1.10 COMP=1.10 SHEAR=1.10 TENS= 1.10

COMPANION LIVE LOAD FACTOR = 1.00

AUTOSOLVE RIGHT HEEL ONLY

TRUSS PLATE MANUFACTURER IS NOT RESPONSIBLE FOR QUALITY CONTROL IN THE TRUSS MANUFACTURING PLANT .

NAIL VALUES

PLATE	GRIP(DRY) (PSI) MAX	MIN	SHEAR (PLI) MAX	MIN	SECTION (PLI) MAX	MIN
MT20	650	371	1747	788	1987	1873

PLATE PLACEMENT TOL. = 0.250 inches

PLATE ROTATION TOL. = 5.0 Deg.

JSI GRIP= 0.19 (B) (INPUT = 0.90)
JSI METAL= 0.06 (B) (INPUT = 1.00)

LICENSED PROFESSIONAL ENGINEER
06-24-22
H. J. G. ALVES
100009024
PROVINCE OF ONTARIO

Structural component only
DWG# T-2215313

REVIEWED

JOB NAME	TRUSS NAME	QUANTITY	PLY	JOB DESC.	DRWG NO.
423616	J35	1	1	BAYVIEW WELLINGTON TRUSS DESC.	

Tamarack Roof Truss, Burlington

Version 8.530 S Feb 23 2022 MiTek Industries, Inc. Fri Jun 24 14:54:58 2022 Page 1
ID:c3jyj23uDijq_8pvRKbkZpy75XW-dz3gJLTV9FGn?VLKOPe2VUeZANN9qN5jQtr5Ocz32fx

Scale = 1:24.6

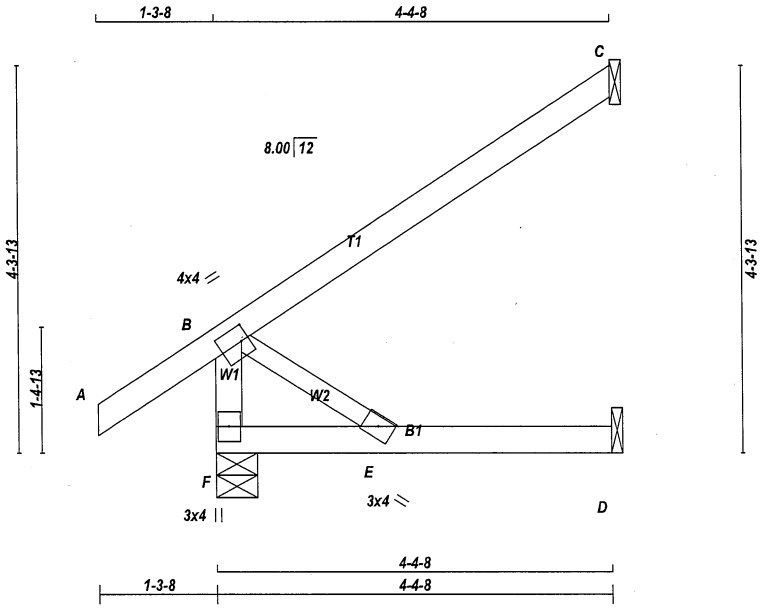

TOTAL WEIGHT = 16 lb [M]

LUMBER
N. L. G. A. RULES

CHORDS	SIZE		LUMBER	DESCR.
F - B	2x4	DRY	No.2	SPF
A - C	2x4	DRY	No.2	SPF
F - D	2x4	DRY	No.2	SPF
ALL WEBS	2x3	DRY	No.2	SPF

DRY: SEASONED LUMBER.

PLATES (table is in inches)

JT	TYPE	PLATES	W	LEN	Y	X
B	TMVW-t	MT20	4.0	4.0	2.00	1.00
E	BMW+w	MT20	3.0	4.0		
F	BMV1+p	MT20	3.0	4.0		

NOTES- (1)
1) Lateral braces to be a minimum of 2X4 SPF #2.

DIMENSIONS, SUPPORTS AND LOADINGS SPECIFIED BY FABRICATOR TO BE VERIFIED BY BUILDING DESIGNER

BEARINGS

JT	FACTORED GROSS REACTION VERT	HORZ	MAXIMUM FACTORED GROSS REACTION DOWN	HORZ	UPLIFT	INPUT BRG IN-SX	REQRD BRG IN-SX
F	441	0	441	0	0	5-8	5-8
C	246	0	246	0	0	1-8	1-8
D	40	0	45	0	0	1-8	1-8

SEE MITEK STANDARD DETAIL MSD2015-H FOR CONNECTION TO JOINT(S) C , D

UNFACTORED REACTIONS

JT	1ST LCASE COMBINED	MAX./MIN. COMPONENT REACTIONS SNOW	LIVE	PERM.LIVE	WIND	DEAD	SOIL
F	306	231 / 0	0 / 0	0 / 0	0 / 0	75 / 0	0 / 0
C	168	142 / 0	0 / 0	0 / 0	0 / 0	26 / 0	0 / 0
D	32	0 / 0	0 / 0	0 / 0	0 / 0	32 / 0	0 / 0

BEARING MATERIAL TO BE SPF NO.2 OR BETTER AT JOINT(S) F

BRACING
TOP CHORD TO BE SHEATHED OR MAX. PURLIN SPACING = 10.00 FT.
MAX. UNBRACED BOTTOM CHORD LENGTH = 10.00 FT OR RIGID CEILING DIRECTLY APPLIED.

ALL PITCH BREAKS AND PERIMETER CORNER JOINTS MUST BE LATERALLY RESTRAINED.

LOADING
TOTAL LOAD CASES: (4)

CHORDS

MEMB. FR-TO	MAX. FACTORED FORCE (LBS)	FACTORED VERT. LOAD (PLF) FROM	TO	LC1	MAX CSI (LC)	MAX. UNBRAC LENGTH
F- B	-400 / 0	0.0	0.0	0.04 (1)		7.81
A- B	0 / 43	-112.4	-112.4	0.15 (1)		10.00
B- C	0 / 0	-112.4	-112.4	0.37 (1)		10.00
F- E	0 / 0	-18.5	-18.5	0.10 (4)		10.00
E- D	0 / 0	-18.5	-18.5	0.10 (4)		10.00

WEBS

MEMB. FR-TO	MAX. FACTORED FORCE (LBS)	MAX CSI (LC)
B- E	0 / 0	0.00 (1)

DESIGN CRITERIA

SPECIFIED LOADS:

TOP CH.	LL =	32.5	PSF
	DL =	6.0	PSF
BOT CH.	LL =	0.0	PSF
	DL =	7.4	PSF
TOTAL LOAD	=	45.9	PSF

SPACING = 24.0 IN. C/C

THIS TRUSS IS DESIGNED FOR RESIDENTIAL OR SMALL BUILDING REQUIREMENTS OF PART 9, NBCC 2015

THIS DESIGN COMPLIES WITH:
- PART 9 OF BCBC 2018 , ABC 2019
- PART 9 OF OBC 2012 (2019 AMENDMENT)
- CSA 086-14
- TPIC 2014

(55 % OF 43.9 P.S.F. G.S.L. PLUS 8.4 P.S.F. RAIN LOAD) EQUALS 32.5 P.S.F. SPECIFIED ROOF LIVE LOAD

ALLOWABLE DEFL.(LL)= L/360 (0.19")
CALCULATED VERT. DEFL.(LL) = L/ 999 (0.00")
ALLOWABLE DEFL.(TL)= L/360 (0.19")
CALCULATED VERT. DEFL.(TL) = L/ 999 (0.02")

CSI: TC=0.37/1.00 (B-C:1) , BC=0.10/1.00 (D-E:4) , WB=0.00/1.00 (B-E:1) , SSI=0.16/1.00 (B-C:1)

DOL LUMBER=1.00 NAIL=1.00 LS BEND=1.10 COMP=1.10 SHEAR=1.10 TENS= 1.10

COMPANION LIVE LOAD FACTOR = 1.00

AUTOSOLVE RIGHT HEEL ONLY

TRUSS PLATE MANUFACTURER IS NOT RESPONSIBLE FOR QUALITY CONTROL IN THE TRUSS MANUFACTURING PLANT .

NAIL VALUES

PLATE	GRIP(DRY) (PSI) MAX	MIN	SHEAR (PLI) MAX	MIN	SECTION (PLI) MAX	MIN
MT20	650	371	1747	788	1987	1873

PLATE PLACEMENT TOL. = 0.250 inches

PLATE ROTATION TOL. = 5.0 Deg.

JSI GRIP= 0.24 (B) (INPUT = 0.90)
JSI METAL= 0.08 (B) (INPUT = 1.00)

LICENSED PROFESSIONAL ENGINEER
06-24-22
H. J. G. ALVES
100009024
PROVINCE OF ONTARIO

Structural component only
DWG# T-2215314

REVIEWED

JOB NAME	TRUSS NAME	QUANTITY	PLY	JOB DESC.	DRWG NO.
423616	J36	2	1	BAYVIEW WELLINGTON TRUSS DESC.	

Tamarack Roof Truss, Burlington

Version 8.530 S Feb 23 2022 MiTek Industries, Inc. Fri Jun 24 14:54:59 2022 Page 1
ID:c3jyj23uDijq_8pvRKbkZpy75XW-59d2XhT7wZOedfwWx7AH2hBnHmkGZqLsfXaew3z32fw

Scale = 1:15.5

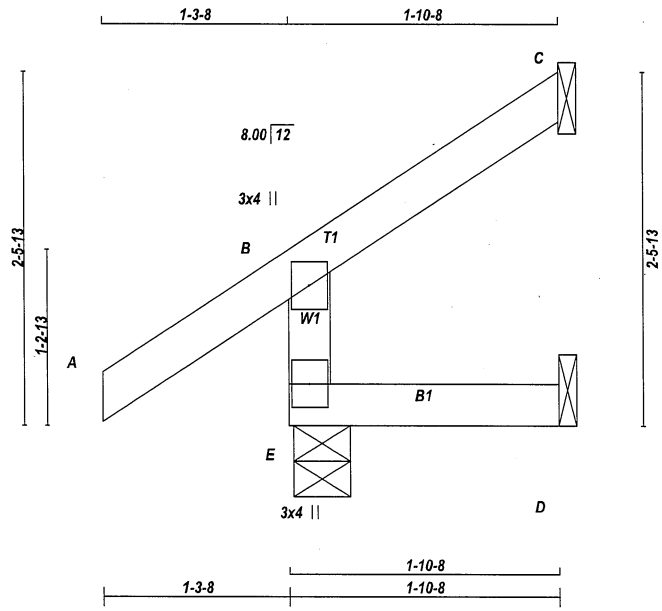

TOTAL WEIGHT = 2 X 8 = 15 lb
[M]

LUMBER
N. L. G. A. RULES

CHORDS	SIZE		LUMBER	DESCR.
E - B	2x4	DRY	No.2	SPF
A - C	2x4	DRY	No.2	SPF
E - D	2x4	DRY	No.2	SPF

DRY: SEASONED LUMBER.

PLATES (table is in inches)

JT	TYPE	PLATES	W	LEN	Y	X
B	TMV+p	MT20	3.0	4.0		
E	BMV1+p	MT20	3.0	4.0		

NOTES- (1)
1) Lateral braces to be a minimum of 2X4 SPF #2.

DIMENSIONS, SUPPORTS AND LOADINGS SPECIFIED BY FABRICATOR TO BE VERIFIED BY BUILDING DESIGNER

BEARINGS

JT	FACTORED GROSS REACTION VERT	HORZ	MAXIMUM FACTORED GROSS REACTION DOWN	HORZ	UPLIFT	INPUT BRG IN-SX	REQRD BRG IN-SX
E	334	0	334	0	0	4-12	4-12
C	60	0	60	0	-28	1-8	1-8
D	6	0	17	0	-6	1-8	1-8

SEE MITEK STANDARD DETAIL MSD2015-H FOR CONNECTION TO JOINT(S) C , D

PROVIDE ANCHORAGE AT BEARING JOINT C FOR 150 LBS FACTORED UPLIFT
PROVIDE ANCHORAGE AT BEARING JOINT D FOR 150 LBS FACTORED UPLIFT

UNFACTORED REACTIONS

JT	1ST LCASE COMBINED	MAX./MIN. COMPONENT REACTIONS SNOW	LIVE	PERM.LIVE	WIND	DEAD	SOIL
E	230	183 / 0	0 / 0	0 / 0	0 / 0	48 / 0	0 / 0
C	41	34 / -22	0 / 0	0 / 0	0 / 0	7 / 0	0 / 0
D	6	0 / -11	0 / 0	0 / 0	0 / 0	12 / 0	0 / 0

BEARING MATERIAL TO BE SPF NO.2 OR BETTER AT JOINT(S) E

BRACING
TOP CHORD TO BE SHEATHED OR MAX. PURLIN SPACING = 6.25 FT.
MAX. UNBRACED BOTTOM CHORD LENGTH = 10.00 FT OR RIGID CEILING DIRECTLY APPLIED.

ALL PITCH BREAKS AND PERIMETER CORNER JOINTS MUST BE LATERALLY RESTRAINED.

LOADING
TOTAL LOAD CASES: (5)

CHORDS

MEMB. FR-TO	MAX. FACTORED FORCE (LBS)	FACTORED VERT. LOAD (PLF) FROM	TO	LC1 CSI	MAX (LC)
E- B	-305 / 0	0.0	0.0	0.05	(5)
A- B	0 / 43	-112.4	-112.4	0.15	(1)
B- C	-25 / 0	-112.4	-112.4	0.12	(1)
E- D	0 / 0	-18.5	-18.5	0.05	(5)

WEBS

MEMB. FR-TO	MAX. FACTORED FORCE (LBS)	MAX CSI (LC)	MAX. UNBRAC LENGTH
			7.81
			10.00
			6.25
			10.00

CANTILEVER ANALYSIS HAS BEEN CONSIDERED IN THIS DESIGN

DESIGN CRITERIA

SPECIFIED LOADS:

TOP CH.	LL	=	32.5	PSF
	DL	=	6.0	PSF
BOT CH.	LL	=	0.0	PSF
	DL	=	7.4	PSF
TOTAL LOAD		=	45.9	PSF

SPACING = 24.0 IN. C/C

THIS TRUSS IS DESIGNED FOR RESIDENTIAL OR SMALL BUILDING REQUIREMENTS OF PART 9, NBCC 2015

THIS DESIGN COMPLIES WITH:
- PART 9 OF BCBC 2018 , ABC 2019
- PART 9 OF OBC 2012 (2019 AMENDMENT)
- CSA 086-14
- TPIC 2014

DESIGN ASSUMPTIONS
-OVERHANG NOT TO BE ALTERED OR CUT OFF.

(55 % OF 43.9 P.S.F. G.S.L. PLUS 8.4 P.S.F. RAIN LOAD) EQUALS 32.5 P.S.F. SPECIFIED ROOF LIVE LOAD

ALLOWABLE DEFL.(LL)= L/360 (0.19")
CALCULATED VERT. DEFL.(LL) = L/ 999 (0.00")
ALLOWABLE DEFL.(TL)= L/360 (0.19")
CALCULATED VERT. DEFL.(TL) = L/ 999 (0.00")

CSI: TC=0.15/1.00 (A-B:1) , BC=0.05/1.00 (D-E:5) , WB=0.00/1.00 (n/a:0) , SSI=0.10/1.00 (A-B:1)

DOL LUMBER=1.00 NAIL=1.00 LS BEND=1.10 COMP=1.10 SHEAR=1.10 TENS= 1.10

COMPANION LIVE LOAD FACTOR = 1.00

AUTOSOLVE RIGHT HEEL ONLY

TRUSS PLATE MANUFACTURER IS NOT RESPONSIBLE FOR QUALITY CONTROL IN THE TRUSS MANUFACTURING PLANT .

NAIL VALUES

PLATE	GRIP(DRY) (PSI) MAX	MIN	SHEAR (PLI) MAX	MIN	SECTION (PLI) MAX	MIN
MT20	650	371	1747	788	1987	1873

PLATE PLACEMENT TOL. = 0.250 inches

PLATE ROTATION TOL. = 5.0 Deg.

JSI GRIP= 0.13 (B) (INPUT = 0.90)
JSI METAL= 0.10 (B) (INPUT = 1.00)

LICENSED PROFESSIONAL ENGINEER
06-24-22
H. J. G. ALVES
100009024
PROVINCE OF ONTARIO

Structural component only
DWG# T-2215315

REVIEWED

JOB NAME	TRUSS NAME	QUANTITY	PLY	JOB DESC.	DRWG NO.
423616	J37	1	1	BAYVIEW WELLINGTON TRUSS DESC.	

Tamarack Roof Truss, Burlington

Version 8.530 S Feb 23 2022 MiTek Industries, Inc. Fri Jun 24 14:54:59 2022 Page 1
ID:c3jyj23uDijq_8pvRKbkZpy75XW-59d2XhT7wZOedfwWx7AH2hBoamkiZqLsfXaew3z32fw

Scale = 1:25.0

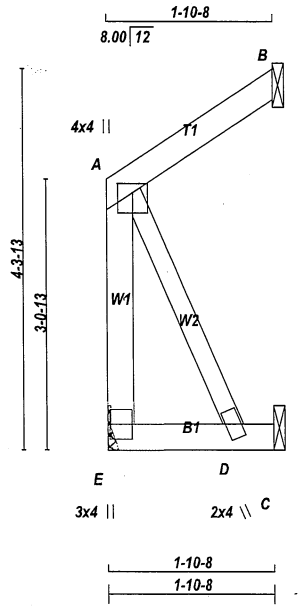

TOTAL WEIGHT = 10 lb

LUMBER
N. L. G. A. RULES

CHORDS	SIZE		LUMBER	DESCR.
E - A	2x4	DRY	No.2	SPF
A - B	2x4	DRY	No.2	SPF
E - C	2x4	DRY	No.2	SPF
ALL WEBS	2x3	DRY	No.2	SPF

DRY: SEASONED LUMBER.

PLATES (table is in inches)

JT	TYPE	PLATES	W	LEN	Y	X
A	TMVW+p	MT20	4.0	4.0	1.25	2.00
D	BMW+w	MT20	2.0	4.0		
E	BMV1+p	MT20	3.0	4.0		

NOTES- (1)
1) Lateral braces to be a minimum of 2X4 SPF #2.

DIMENSIONS, SUPPORTS AND LOADINGS SPECIFIED BY FABRICATOR TO BE VERIFIED BY BUILDING DESIGNER

BEARINGS

JT	FACTORED GROSS REACTION VERT	HORZ	MAXIMUM FACTORED GROSS REACTION DOWN	HORZ	UPLIFT	INPUT BRG IN-SX	REQRD BRG IN-SX
E	123	0	123	0	0	MECHANICAL	
B	105	0	105	0	0	1-8	1-8
C	17	0	19	0	0	1-8	1-8

A SUITABLE HANGER/MECHANICAL CONNECTION IS REQUIRED AT JOINT E. MINIMUM BEARING LENGTH AT JOINT E = 1-8.

SEE MITEK STANDARD DETAIL MSD2015-H FOR CONNECTION TO JOINT(S) B , C

UNFACTORED REACTIONS

JT	1ST LCASE COMBINED	MAX./MIN. COMPONENT REACTIONS SNOW	LIVE	PERM.LIVE	WIND	DEAD	SOIL
E	86	61 / 0	0 / 0	0 / 0	0 / 0	25 / 0	0 / 0
B	72	61 / 0	0 / 0	0 / 0	0 / 0	11 / 0	0 / 0
C	14	0 / 0	0 / 0	0 / 0	0 / 0	14 / 0	0 / 0

BRACING
TOP CHORD TO BE SHEATHED OR MAX. PURLIN SPACING = 10.00 FT.
MAX. UNBRACED BOTTOM CHORD LENGTH = 10.00 FT OR RIGID CEILING DIRECTLY APPLIED.

ALL PITCH BREAKS AND PERIMETER CORNER JOINTS MUST BE LATERALLY RESTRAINED.

LOADING
TOTAL LOAD CASES: (4)

CHORDS

MEMB. FR-TO	MAX. FACTORED FORCE (LBS)	FACTORED VERT. LOAD (PLF) FROM	TO	LC1 MAX CSI (LC)	MAX. UNBRAC LENGTH
E- A	-105 / 0	0.0	0.0	0.02 (1)	7.81
A- B	0 / 0	-112.4	-112.4	0.07 (1)	10.00
E- D	0 / 0	-18.5	-18.5	0.02 (4)	10.00
D- C	0 / 0	-18.5	-18.5	0.01 (4)	10.00

WEBS

MEMB. FR-TO	MAX. FACTORED FORCE (LBS)	MAX CSI (LC)
A- D	0 / 0	0.00 (1)

DESIGN CRITERIA

SPECIFIED LOADS:

TOP CH.	LL =	32.5	PSF
	DL =	6.0	PSF
BOT CH.	LL =	0.0	PSF
	DL =	7.4	PSF
TOTAL LOAD	=	45.9	PSF

SPACING = 24.0 IN. C/C

THIS TRUSS IS DESIGNED FOR RESIDENTIAL OR SMALL BUILDING REQUIREMENTS OF PART 9, NBCC 2015

THIS DESIGN COMPLIES WITH:
- PART 9 OF BCBC 2018 , ABC 2019
- PART 9 OF OBC 2012 (2019 AMENDMENT)
- CSA 086-14
- TPIC 2014

(55 % OF 43.9 P.S.F. G.S.L. PLUS 8.4 P.S.F. RAIN LOAD) EQUALS 32.5 P.S.F. SPECIFIED ROOF LIVE LOAD

ALLOWABLE DEFL.(LL)= L/360 (0.19")
CALCULATED VERT. DEFL.(LL) = L/ 999 (0.00")
ALLOWABLE DEFL.(TL)= L/360 (0.19")
CALCULATED VERT. DEFL.(TL) = L/ 999 (0.00")

CSI: TC=0.07/1.00 (A-B:1) , BC=0.02/1.00 (D-E:4) , WB=0.00/1.00 (A-D:1) , SSI=0.07/1.00 (A-B:1)

DOL LUMBER=1.00 NAIL=1.00 LS BEND=1.10 COMP=1.10 SHEAR=1.10 TENS= 1.10

COMPANION LIVE LOAD FACTOR = 1.00

TRUSS PLATE MANUFACTURER IS NOT RESPONSIBLE FOR QUALITY CONTROL IN THE TRUSS MANUFACTURING PLANT .

NAIL VALUES

PLATE	GRIP(DRY) (PSI) MAX	MIN	SHEAR (PLI) MAX	MIN	SECTION (PLI) MAX	MIN
MT20	650	371	1747	788	1987	1873

PLATE PLACEMENT TOL. = 0.250 inches

PLATE ROTATION TOL. = 5.0 Deg.

JSI GRIP= 0.07 (A) (INPUT = 0.90)
JSI METAL= 0.02 (A) (INPUT = 1.00)

LICENSED PROFESSIONAL ENGINEER
06-24-22
H. J. G. ALVES
100009024
PROVINCE OF ONTARIO

Structural component only
DWG# T-2215316

REVIEWED

JOB NAME	TRUSS NAME	QUANTITY	PLY	JOB DESC.	DRWG NO.
423615	J200	6	1	BAYVIEW WELLINGTON TRUSS DESC.	

Tamarack Roof Truss, Burlington

Version 8.530 S Feb 23 2022 MiTek Industries, Inc. Fri Jun 24 16:24:38 2022 Page 1
ID:c3jyj23uDijq_8pvRKbkZpy75XW-6_8XSyaB9G4QSIdJYJAgY0T_g4ZANazcYu4nDnz31Lt

Scale = 1:29.1

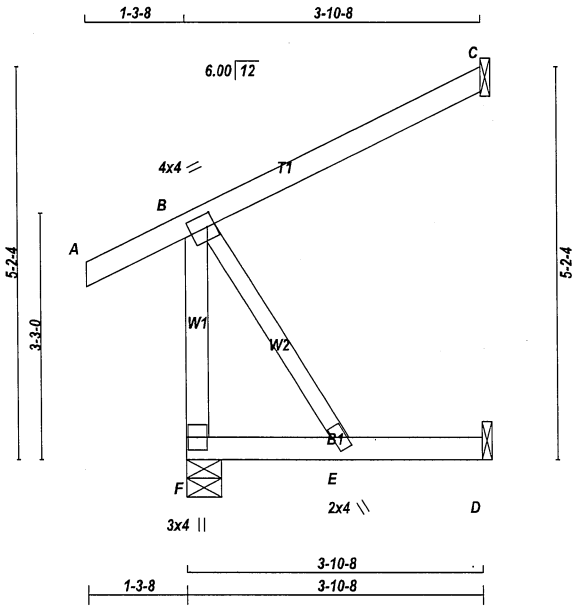

TOTAL WEIGHT = 6 X 17 = 102 lb [M]

LUMBER
N. L. G. A. RULES

CHORDS	SIZE		LUMBER	DESCR.
F - B	2x4	DRY	No.2	SPF
A - C	2x4	DRY	No.2	SPF
F - D	2x4	DRY	No.2	SPF
ALL WEBS	2x3	DRY	No.2	SPF

DRY: SEASONED LUMBER.

PLATES (table is in inches)

JT	TYPE	PLATES	W	LEN	Y	X
B	TMVW-t	MT20	4.0	4.0	2.00	1.25
E	BMW+w	MT20	2.0	4.0		
F	BMV1+p	MT20	3.0	4.0		

NOTES- (1)
1) Lateral braces to be a minimum of 2X4 SPF #2.

DIMENSIONS, SUPPORTS AND LOADINGS SPECIFIED BY FABRICATOR TO BE VERIFIED BY BUILDING DESIGNER

BEARINGS

JT	FACTORED GROSS REACTION VERT	HORZ	MAXIMUM FACTORED GROSS REACTION DOWN	HORZ	UPLIFT	INPUT BRG IN-SX	REQRD BRG IN-SX
F	406	0	406	0	0	5-8	5-8
C	218	0	218	0	0	1-8	1-8
D	36	0	40	0	0	1-8	1-8

SEE MITEK STANDARD DETAIL MSD2015-H FOR CONNECTION TO JOINT(S) C , D

UNFACTORED REACTIONS

JT	1ST LCASE COMBINED	MAX./MIN. COMPONENT REACTIONS SNOW	LIVE	PERM.LIVE	WIND	DEAD	SOIL
F	282	214 / 0	0 / 0	0 / 0	0 / 0	68 / 0	0 / 0
C	149	126 / 0	0 / 0	0 / 0	0 / 0	23 / 0	0 / 0
D	29	0 / 0	0 / 0	0 / 0	0 / 0	29 / 0	0 / 0

BEARING MATERIAL TO BE SPF NO.2 OR BETTER AT JOINT(S) F

BRACING
TOP CHORD TO BE SHEATHED OR MAX. PURLIN SPACING = 10.00 FT.
MAX. UNBRACED BOTTOM CHORD LENGTH = 10.00 FT OR RIGID CEILING DIRECTLY APPLIED.

ALL PITCH BREAKS AND PERIMETER CORNER JOINTS MUST BE LATERALLY RESTRAINED.

LOADING
TOTAL LOAD CASES: (5)

CHORDS

MEMB. FR-TO	MAX. FACTORED FORCE (LBS)	FACTORED VERT. LOAD (PLF) FROM	TO	LC1	MAX CSI (LC)	MAX. UNBRAC LENGTH
F- B	-370 / 0	0.0	0.0		0.07 (1)	7.81
A- B	0 / 34	-112.4	-112.4		0.16 (5)	10.00
B- C	0 / 0	-112.4	-112.4		0.29 (1)	10.00
F- E	0 / 0	-18.5	-18.5		0.08 (4)	10.00
E- D	0 / 0	-18.5	-18.5		0.08 (4)	10.00

WEBS

MEMB. FR-TO	MAX. FACTORED FORCE (LBS)	MAX CSI (LC)
B- E	0 / 0	0.00 (1)

CANTILEVER ANALYSIS HAS BEEN CONSIDERED IN THIS DESIGN

DESIGN CRITERIA

SPECIFIED LOADS:

TOP CH.	LL	=	32.5	PSF
	DL	=	6.0	PSF
BOT CH.	LL	=	0.0	PSF
	DL	=	7.4	PSF
TOTAL LOAD		=	45.9	PSF

SPACING = 24.0 IN. C/C

THIS TRUSS IS DESIGNED FOR RESIDENTIAL OR SMALL BUILDING REQUIREMENTS OF PART 9, NBCC 2015

THIS DESIGN COMPLIES WITH:
- PART 9 OF BCBC 2018 , ABC 2019
- PART 9 OF OBC 2012 (2019 AMENDMENT)
- CSA 086-14
- TPIC 2014

(55 % OF 43.9 P.S.F. G.S.L. PLUS 8.4 P.S.F. RAIN LOAD) EQUALS 32.5 P.S.F. SPECIFIED ROOF LIVE LOAD

ALLOWABLE DEFL.(LL)= L/360 (0.19")
CALCULATED VERT. DEFL.(LL) = L/ 999 (0.00")
ALLOWABLE DEFL.(TL)= L/360 (0.19")
CALCULATED VERT. DEFL.(TL) = L/ 999 (0.01")

CSI: TC=0.29/1.00 (B-C:1) , BC=0.08/1.00 (E-F:4) , WB=0.00/1.00 (B-E:1) , SSI=0.15/1.00 (B-C:1)

DOL LUMBER=1.00 NAIL=1.00 LS BEND=1.10 COMP=1.10 SHEAR=1.10 TENS= 1.10

COMPANION LIVE LOAD FACTOR = 1.00

TRUSS PLATE MANUFACTURER IS NOT RESPONSIBLE FOR QUALITY CONTROL IN THE TRUSS MANUFACTURING PLANT .

NAIL VALUES

PLATE	GRIP(DRY) (PSI) MAX	MIN	SHEAR (PLI) MAX	MIN	SECTION (PLI) MAX	MIN
MT20	650	371	1747	788	1987	1873

PLATE PLACEMENT TOL. = 0.250 inches

PLATE ROTATION TOL. = 5.0 Deg.

JSI GRIP= 0.22 (B) (INPUT = 0.90)
JSI METAL= 0.06 (B) (INPUT = 1.00)

LICENSED PROFESSIONAL ENGINEER
06-24-22
H. J. G. ALVES
100009024
PROVINCE OF ONTARIO

Structural component only
DWG# T-2215333

REVIEWED

JOB NAME	TRUSS NAME	QUANTITY	PLY	JOB DESC.	DRWG NO.
423615	J201	1	1	BAYVIEW WELLINGTON TRUSS DESC.	

Tamarack Roof Truss, Burlington

Version 8.530 S Feb 23 2022 MiTek Industries, Inc. Fri Jun 24 16:24:39 2022 Page 1
ID:c3jyj23uDijq_8pvRKbkZpy75XW-aAivgIapwZCH3SCV60hv5D?BSUvP61DlnYqKlDz31Ls

Scale: 1/2"=1'

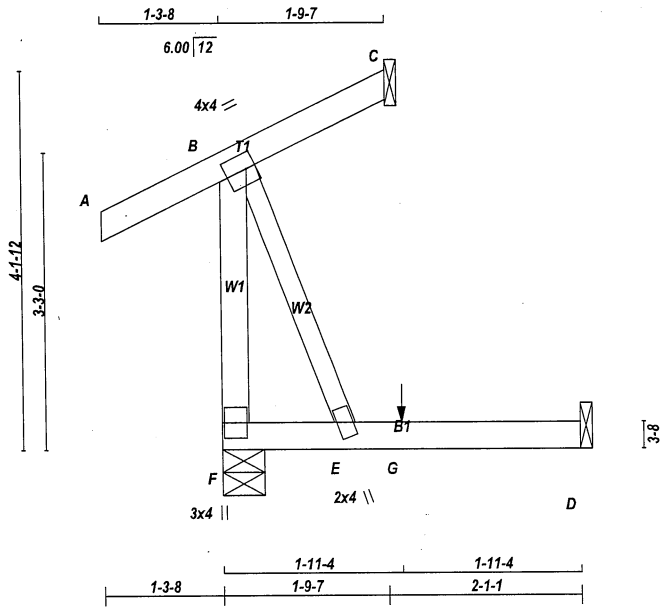

TOTAL WEIGHT = 14 lb

LUMBER
N. L. G. A. RULES

CHORDS	SIZE		LUMBER	DESCR.
F - B	2x4	DRY	No.2	SPF
A - C	2x4	DRY	No.2	SPF
F - D	2x4	DRY	No.2	SPF
ALL WEBS	2x3	DRY	No.2	SPF

DRY: SEASONED LUMBER.

PLATES (table is in inches)

JT	TYPE	PLATES	W	LEN	Y	X
B	TMVW-t	MT20	4.0	4.0	2.00	1.25
E	BMW+w	MT20	2.0	4.0		
F	BMV1+p	MT20	3.0	4.0		

NOTES- (1)
1) Lateral braces to be a minimum of 2X4 SPF #2.

DIMENSIONS, SUPPORTS AND LOADINGS SPECIFIED BY FABRICATOR TO BE VERIFIED BY BUILDING DESIGNER

BEARINGS

JT	FACTORED GROSS REACTION VERT	HORZ	MAXIMUM FACTORED GROSS REACTION DOWN	HORZ	UPLIFT	INPUT BRG IN-SX	REQRD BRG IN-SX
F	347	0	347	0	0	5-8	5-8
C	43	0	43	0	-48	1-8	1-8
D	36	0	40	0	0	1-8	1-8

SEE MITEK STANDARD DETAIL MSD2015-H FOR CONNECTION TO JOINT(S) C , D

PROVIDE ANCHORAGE AT BEARING JOINT C FOR 150 LBS FACTORED UPLIFT

UNFACTORED REACTIONS

JT	1ST LCASE COMBINED	MAX./MIN. COMPONENT REACTIONS SNOW	LIVE	PERM.LIVE	WIND	DEAD	SOIL
F	241	180 / 0	0 / 0	0 / 0	0 / 0	62 / 0	0 / 0
C	29	25 / -33	0 / 0	0 / 0	0 / 0	5 / 0	0 / 0
D	29	0 / 0	0 / 0	0 / 0	0 / 0	29 / 0	0 / 0

BEARING MATERIAL TO BE SPF NO.2 OR BETTER AT JOINT(S) F, C

BRACING
TOP CHORD TO BE SHEATHED OR MAX. PURLIN SPACING = 6.25 FT.
MAX. UNBRACED BOTTOM CHORD LENGTH = 10.00 FT OR RIGID CEILING DIRECTLY APPLIED.

ALL PITCH BREAKS AND PERIMETER CORNER JOINTS MUST BE LATERALLY RESTRAINED.

LOADING
TOTAL LOAD CASES: (5)

CHORDS

MEMB. FR-TO	MAX. FACTORED FORCE (LBS)	FACTORED VERT. LOAD LC1 (PLF) FROM	TO	MAX CSI (LC)	MAX. UNBRAC LENGTH
F- B	-311 / 0	0.0	0.0	0.06 (1)	7.81
A- B	0 / 34	-112.4	-112.4	0.16 (5)	10.00
B- C	-26 / 0	-112.4	-112.4	0.15 (5)	6.25
F- E	0 / 0	-18.5	-18.5	0.07 (4)	10.00
E- G	0 / 0	-18.5	-18.5	0.08 (4)	10.00
G- D	0 / 0	-18.5	-18.5	0.08 (4)	10.00

WEBS

MEMB. FR-TO	MAX. FACTORED FORCE (LBS)	MAX CSI (LC)
B- E	0 / 0	0.00 (1)

SPECIFIED CONCENTRATED LOADS (LBS)

JT	LOC.	LC1	MAX-	MAX+	FACE	DIR.	TYPE	HEEL	CONN.
G	1-11-4	1	1	---	BACK	VERT	TOTAL	---	C1

CONNECTION REQUIREMENTS

1) **C1:** A SUITABLE HANGER/MECHANICAL CONNECTION IS REQUIRED.

CANTILEVER ANALYSIS HAS BEEN CONSIDERED IN THIS DESIGN

[M]

DESIGN CRITERIA

SPECIFIED LOADS:

TOP CH.	LL =	32.5	PSF
	DL =	6.0	PSF
BOT CH.	LL =	0.0	PSF
	DL =	7.4	PSF
TOTAL LOAD	=	45.9	PSF

SPACING = 24.0 IN. C/C

THIS TRUSS IS DESIGNED FOR RESIDENTIAL OR SMALL BUILDING REQUIREMENTS OF PART 9, NBCC 2015

THIS DESIGN COMPLIES WITH:
- PART 9 OF BCBC 2018 , ABC 2019
- PART 9 OF OBC 2012 (2019 AMENDMENT)
- CSA 086-14
- TPIC 2014

DESIGN ASSUMPTIONS
-OVERHANG NOT TO BE ALTERED OR CUT OFF.

(55 % OF 43.9 P.S.F. G.S.L. PLUS 8.4 P.S.F. RAIN LOAD) EQUALS 32.5 P.S.F. SPECIFIED ROOF LIVE LOAD

ALLOWABLE DEFL.(LL)= L/360 (0.19")
CALCULATED VERT. DEFL.(LL) = L/ 999 (0.00")
ALLOWABLE DEFL.(TL)= L/360 (0.19")
CALCULATED VERT. DEFL.(TL) = L/ 999 (0.01")

CSI: TC=0.16/1.00 (A-B:5) , BC=0.08/1.00 (D-E:4) , WB=0.00/1.00 (B-E:1) , SSI=0.11/1.00 (A-B:5)

DOL LUMBER=1.00 NAIL=1.00 LS BEND=1.10 COMP=1.10 SHEAR=1.10 TENS= 1.10

COMPANION LIVE LOAD FACTOR = 1.00

TRUSS PLATE MANUFACTURER IS NOT RESPONSIBLE FOR QUALITY CONTROL IN THE TRUSS MANUFACTURING PLANT .

NAIL VALUES

PLATE	GRIP(DRY) (PSI) MAX	MIN	SHEAR (PLI) MAX	MIN	SECTION (PLI) MAX	MIN
MT20	650	371	1747	788	1987	1873

PLATE PLACEMENT TOL. = 0.250 inches

PLATE ROTATION TOL. = 5.0 Deg.

JSI GRIP= 0.18 (B) (INPUT = 0.90)
JSI METAL= 0.05 (B) (INPUT = 1.00)

LICENSED PROFESSIONAL ENGINEER
06-24-22
H. J. G. ALVES
100009024
PROVINCE OF ONTARIO

Structural component only
DWG# T-2215334

REVIEWED

JOB NAME	TRUSS NAME	QUANTITY	PLY	JOB DESC.	DRWG NO.
423615	J202	1	1	BAYVIEW WELLINGTON TRUSS DESC.	

Tamarack Roof Truss, Burlington

Version 8.530 S Feb 23 2022 MiTek Industries, Inc. Fri Jun 24 16:24:40 2022 Page 1
ID:c3jyj23uDijq_8pvRKbkZpy75XW-2NGHtebRhtL8hcnigjC8eRYKyuBSrUSu0CZtHgz31Lr

Scale = 1:18.4

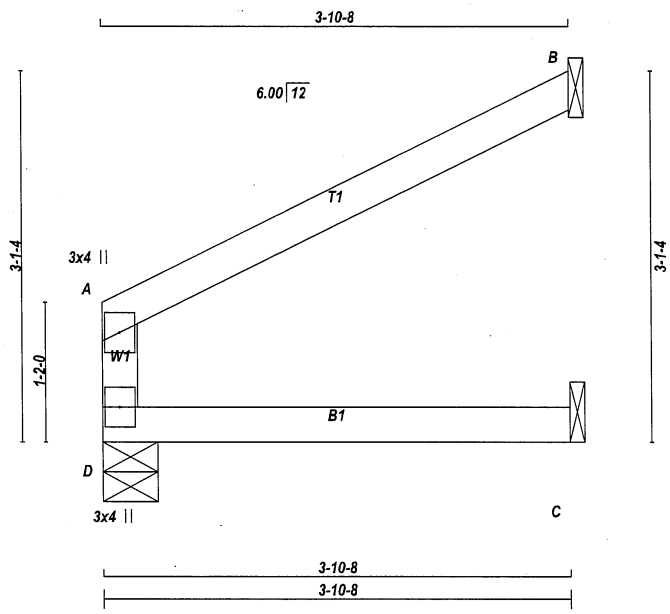

TOTAL WEIGHT = 10 lb

LUMBER
N. L. G. A. RULES

CHORDS	SIZE		LUMBER	DESCR.
D - A	2x4	DRY	No.2	SPF
A - B	2x4	DRY	No.2	SPF
D - C	2x4	DRY	No.2	SPF

DRY: SEASONED LUMBER.

PLATES (table is in inches)

JT	TYPE	PLATES	W	LEN	Y	X
A	TMV+p	MT20	3.0	4.0		
D	BMV1+p	MT20	3.0	4.0		

NOTES- (1)
1) Lateral braces to be a minimum of 2X4 SPF #2.

DIMENSIONS, SUPPORTS AND LOADINGS SPECIFIED BY FABRICATOR TO BE VERIFIED BY BUILDING DESIGNER

BEARINGS

JT	FACTORED GROSS REACTION VERT	HORZ	MAXIMUM FACTORED GROSS REACTION DOWN	HORZ	UPLIFT	INPUT BRG IN-SX	REQRD BRG IN-SX
D	404	0	404	0	0	5-8	5-8
B	213	0	213	0	0	1-8	1-8
C	192	0	192	0	0	1-8	1-8

SEE MITEK STANDARD DETAIL MSD2015-H FOR CONNECTION TO JOINT(S) B , C

UNFACTORED REACTIONS

JT	1ST LCASE COMBINED	MAX./MIN. COMPONENT REACTIONS SNOW	LIVE	PERM.LIVE	WIND	DEAD	SOIL
D	283	201 / 0	0 / 0	0 / 0	0 / 0	83 / 0	0 / 0
B	146	120 / 0	0 / 0	0 / 0	0 / 0	26 / 0	0 / 0
C	137	81 / 0	0 / 0	0 / 0	0 / 0	56 / 0	0 / 0

BEARING MATERIAL TO BE SPF NO.2 OR BETTER AT JOINT(S) D

BRACING
TOP CHORD TO BE SHEATHED OR MAX. PURLIN SPACING = 10.00 FT.
MAX. UNBRACED BOTTOM CHORD LENGTH = 10.00 FT OR RIGID CEILING DIRECTLY APPLIED.

ALL PITCH BREAKS AND PERIMETER CORNER JOINTS MUST BE LATERALLY RESTRAINED.

LOADING
TOTAL LOAD CASES: (4)

CHORDS MEMB. FR-TO	MAX. FACTORED FORCE (LBS)	FACTORED VERT. LOAD (PLF) FROM	TO	LC1 MAX CSI (LC)	WEBS MAX. UNBRAC LENGTH	MEMB. FR-TO	MAX. FACTORED FORCE (LBS)	MAX CSI (LC)
D- A	-223 / 0	0.0	0.0	0.04 (4)	7.81			
A- B	-2 / 2	-112.4	-112.4	0.30 (1)	10.00			
D- C	0 / 0	-96.2	-96.2	0.29 (1)	10.00			

DESIGN CRITERIA [M]

SPECIFIED LOADS:

TOP CH.	LL =	32.5	PSF
	DL =	6.0	PSF
BOT CH.	LL =	0.0	PSF
	DL =	7.4	PSF
TOTAL LOAD	=	45.9	PSF

SPACING = 24.0 IN. C/C

GIRDER TYPE: CStdGirder
START DISTANCE = 0-0
START SPAN CARRIED = 4-6-0
END DISTANCE = 3-10-8
END SPAN CARRIED = 4-6-0
END WALL WIDTH = 1-8
APPLIED TO FRONT SIDE OF BOTTOM CHORD.
- ADDT'L LOADS BASED ON 55 % OF GSL.

THIS TRUSS IS DESIGNED FOR RESIDENTIAL OR SMALL BUILDING REQUIREMENTS OF PART 9, NBCC 2015

THIS DESIGN COMPLIES WITH:
- PART 9 OF BCBC 2018 , ABC 2019
- PART 9 OF OBC 2012 (2019 AMENDMENT)
- CSA 086-14
- TPIC 2014

(55 % OF 43.9 P.S.F. G.S.L. PLUS 8.4 P.S.F. RAIN LOAD) EQUALS 32.5 P.S.F. SPECIFIED ROOF LIVE LOAD

ALLOWABLE DEFL.(LL)= L/360 (0.19")
CALCULATED VERT. DEFL.(LL) = L/ 999 (0.03")
ALLOWABLE DEFL.(TL)= L/360 (0.19")
CALCULATED VERT. DEFL.(TL) = L/ 768 (0.06")

CSI: TC=0.30/1.00 (A-B:1) , BC=0.29/1.00 (C-D:1) , WB=0.00/1.00 (n/a:0) , SSI=0.17/1.00 (A-B:1)

DOL LUMBER=1.00 NAIL=1.00 LS BEND=1.00 COMP=1.00 SHEAR=1.00 TENS= 1.00

COMPANION LIVE LOAD FACTOR = 1.00

TRUSS PLATE MANUFACTURER IS NOT RESPONSIBLE FOR QUALITY CONTROL IN THE TRUSS MANUFACTURING PLANT .

NAIL VALUES

PLATE	GRIP(DRY) (PSI) MAX	MIN	SHEAR (PLI) MAX	MIN	SECTION (PLI) MAX	MIN
MT20	650	371	1747	788	1987	1873

PLATE PLACEMENT TOL. = 0.250 inches

PLATE ROTATION TOL. = 5.0 Deg.

JSI GRIP= 0.09 (D) (INPUT = 0.90)
JSI METAL= 0.06 (A) (INPUT = 1.00)

LICENSED PROFESSIONAL ENGINEER
06-24-22
H. J. G. ALVES
100009024
PROVINCE OF ONTARIO

Structural component only
DWG# T-2215335

REVIEWED

JOB NAME	TRUSS NAME	QUANTITY	PLY	JOB DESC.	DRWG NO.
423615	J203	1	1	BAYVIEW WELLINGTON TRUSS DESC.	

Tamarack Roof Truss, Burlington

Version 8.530 S Feb 23 2022 MiTek Industries, Inc. Fri Jun 24 16:24:41 2022 Page 1
ID:c3jyj23uDijq_8pvRKbkZpy75XW-WZqg5zc3SBT?JlMuERjNAe5X_IbBaxi2EsJRq6z31Lq

Scale = 1:13.3

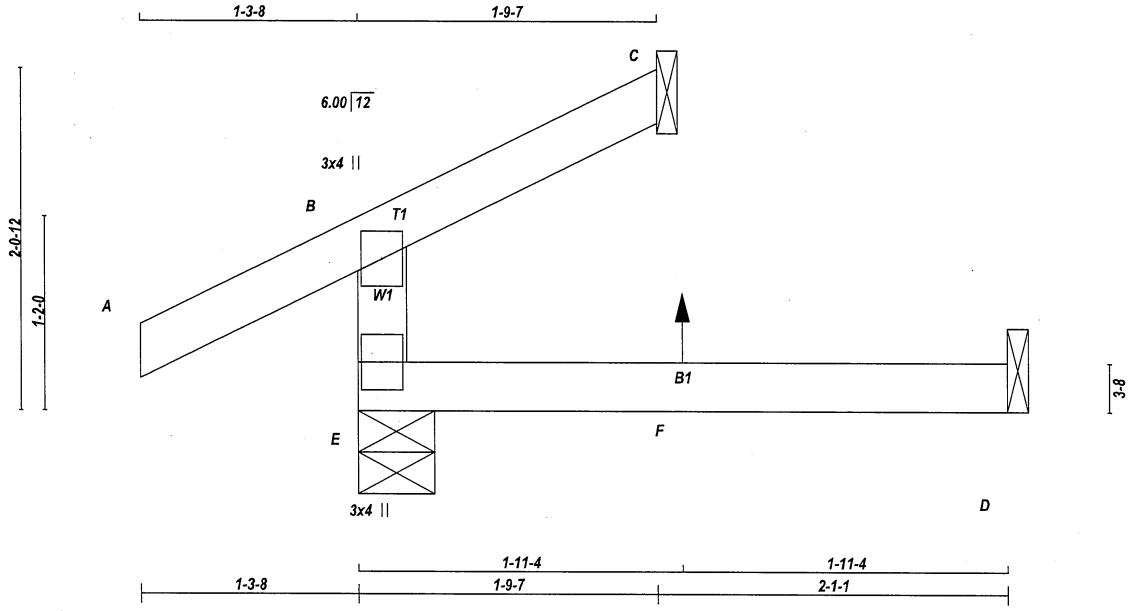

TOTAL WEIGHT = 9 lb
[M]

LUMBER
N. L. G. A. RULES

CHORDS	SIZE		LUMBER	DESCR.
E - B	2x4	DRY	No.2	SPF
A - C	2x4	DRY	No.2	SPF
E - D	2x4	DRY	No.2	SPF

DRY: SEASONED LUMBER.

PLATES (table is in inches)

JT	TYPE	PLATES	W	LEN	Y	X
B	TMV+p	MT20	3.0	4.0		
E	BMV1+p	MT20	3.0	4.0		

NOTES- (1)
1) Lateral braces to be a minimum of 2X4 SPF #2.

DIMENSIONS, SUPPORTS AND LOADINGS SPECIFIED BY FABRICATOR TO BE VERIFIED BY BUILDING DESIGNER

BEARINGS

JT	FACTORED GROSS REACTION VERT	HORZ	MAXIMUM FACTORED GROSS REACTION DOWN	HORZ	UPLIFT	INPUT BRG IN-SX	REQRD BRG IN-SX
E	334	0	334	0	0	5-8	5-8
C	58	0	58	0	-29	1-8	1-8
D	24	0	35	0	0	1-8	1-8

SEE MITEK STANDARD DETAIL MSD2015-H FOR CONNECTION TO JOINT(S) C , D

PROVIDE ANCHORAGE AT BEARING JOINT C FOR 150 LBS FACTORED UPLIFT

UNFACTORED REACTIONS

JT	1ST LCASE COMBINED	MAX./MIN. COMPONENT REACTIONS SNOW	LIVE	PERM.LIVE	WIND	DEAD	SOIL
E	232	175 / 0	0 / 0	0 / 0	0 / 0	58 / 0	0 / 0
C	41	28 / -25	0 / 0	0 / 0	0 / 0	13 / 0	0 / 0
D	20	0 / -6	0 / 0	0 / 0	0 / 0	25 / 0	0 / 0

BEARING MATERIAL TO BE SPF NO.2 OR BETTER AT JOINT(S) E, C

BRACING
TOP CHORD TO BE SHEATHED OR MAX. PURLIN SPACING = 6.25 FT.
MAX. UNBRACED BOTTOM CHORD LENGTH = 10.00 FT OR RIGID CEILING DIRECTLY APPLIED.

ALL PITCH BREAKS AND PERIMETER CORNER JOINTS MUST BE LATERALLY RESTRAINED.

LOADING
TOTAL LOAD CASES: (9)

CHORDS

MEMB. FR-TO	MAX. FACTORED FORCE (LBS)	FACTORED VERT. LOAD (PLF) FROM	TO	LC1 CSI	MAX (LC)	MAX. UNBRAC LENGTH
E- B	-297 / 0	0.0	0.0	0.05	(5)	7.81
A- B	0 / 34	-112.4	-112.4	0.16	(5)	10.00
B- C	-20 / 1	-112.4	-112.4	0.11	(6)	6.25
E- F	0 / 0	-18.5	-18.5	0.06	(4)	10.00
F- D	0 / 0	-18.5	-18.5	0.06	(4)	10.00

WEBS

MEMB.	MAX. FACTORED FORCE (LBS)	MAX CSI (LC)

SPECIFIED CONCENTRATED LOADS (LBS)

JT	LOC.	LC1	MAX-	MAX+	FACE	DIR.	TYPE	HEEL	CONN.
F	1-11-4	6	1	10	FRONT	VERT	TOTAL	---	C1

CONNECTION REQUIREMENTS

1) **C1:** A SUITABLE HANGER/MECHANICAL CONNECTION IS REQUIRED.

CANTILEVER ANALYSIS HAS BEEN CONSIDERED IN THIS DESIGN

DESIGN CRITERIA

SPECIFIED LOADS:

TOP CH.	LL	=	32.5	PSF
	DL	=	6.0	PSF
BOT CH.	LL	=	0.0	PSF
	DL	=	7.4	PSF
TOTAL LOAD		=	45.9	PSF

SPACING = 24.0 IN. C/C

THIS TRUSS IS DESIGNED FOR RESIDENTIAL OR SMALL BUILDING REQUIREMENTS OF PART 9, NBCC 2015

THIS DESIGN COMPLIES WITH:
- PART 9 OF BCBC 2018 , ABC 2019
- PART 9 OF OBC 2012 (2019 AMENDMENT)
- CSA 086-14
- TPIC 2014

DESIGN ASSUMPTIONS
-OVERHANG NOT TO BE ALTERED OR CUT OFF.

(55 % OF 43.9 P.S.F. G.S.L. PLUS 8.4 P.S.F. RAIN LOAD) EQUALS 32.5 P.S.F. SPECIFIED ROOF LIVE LOAD

ALLOWABLE DEFL.(LL)= L/360 (0.19")
CALCULATED VERT. DEFL.(LL) = L/ 999 (0.00")
ALLOWABLE DEFL.(TL)= L/360 (0.19")
CALCULATED VERT. DEFL.(TL) = L/ 999 (0.01")

CSI: TC=0.16/1.00 (A-B:5) , BC=0.06/1.00 (D-E:4) , WB=0.00/1.00 (n/a:0) , SSI=0.11/1.00 (A-B:5)

DOL LUMBER=1.00 NAIL=1.00 LS BEND=1.10 COMP=1.10 SHEAR=1.10 TENS= 1.10

COMPANION LIVE LOAD FACTOR = 1.00

AUTOSOLVE RIGHT HEEL ONLY

TRUSS PLATE MANUFACTURER IS NOT RESPONSIBLE FOR QUALITY CONTROL IN THE TRUSS MANUFACTURING PLANT .

NAIL VALUES

PLATE	GRIP(DRY) (PSI) MAX	MIN	SHEAR (PLI) MAX	MIN	SECTION (PLI) MAX	MIN
MT20	650	371	1747	788	1987	1873

PLATE PLACEMENT TOL. = 0.250 inches

PLATE ROTATION TOL. = 5.0 Deg.

JSI GRIP= 0.12 (E) (INPUT = 0.90)
JSI METAL= 0.08 (B) (INPUT = 1.00)

LICENSED PROFESSIONAL ENGINEER
06-24-22
H. J. G. ALVES
100009024
PROVINCE OF ONTARIO

Structural component only
DWG# T-2215336

REVIEWED

JOB NAME	TRUSS NAME	QUANTITY	PLY	JOB DESC.	DRWG NO.
423615	J204	1	1	BAYVIEW WELLINGTON TRUSS DESC.	

Tamarack Roof Truss, Burlington

Version 8.530 S Feb 23 2022 MiTek Industries, Inc. Fri Jun 24 16:24:41 2022 Page 1
ID:c3jyj23uDijq_8pvRKbkZpy75XW-WZqg5zc3SBT?JIMuERjNAe5X7Ibraxi2EsJRq6z31Lq

Scale: 1/2"=1'

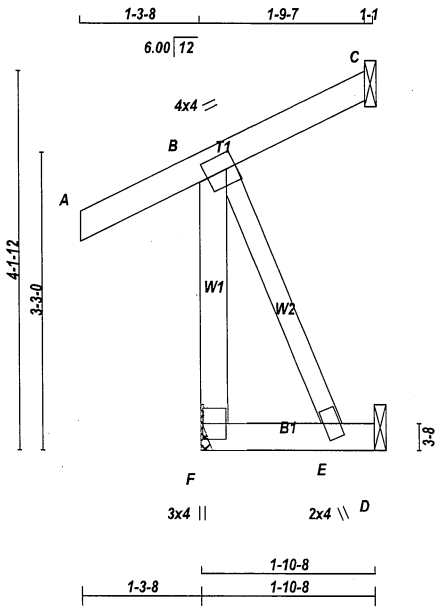

TOTAL WEIGHT = 12 lb
[M]

LUMBER
N. L. G. A. RULES

CHORDS	SIZE		LUMBER	DESCR.
F - B	2x4	DRY	No.2	SPF
A - C	2x4	DRY	No.2	SPF
F - D	2x4	DRY	No.2	SPF
ALL WEBS	2x3	DRY	No.2	SPF

DRY: SEASONED LUMBER.

PLATES (table is in inches)

JT	TYPE	PLATES	W	LEN	Y	X
B	TMVW-t	MT20	4.0	4.0	2.00	1.25
E	BMW+w	MT20	2.0	4.0		
F	BMV1+p	MT20	3.0	4.0		

NOTES- (1)
1) Lateral braces to be a minimum of 2X4 SPF #2.

DIMENSIONS, SUPPORTS AND LOADINGS SPECIFIED BY FABRICATOR TO BE VERIFIED BY BUILDING DESIGNER

BEARINGS

JT	FACTORED GROSS REACTION VERT	HORZ	MAXIMUM FACTORED GROSS REACTION DOWN	HORZ	UPLIFT	INPUT BRG IN-SX	REQRD BRG IN-SX
F	328	0	328	0	0	MECHANICAL	
C	42	0	42	0	-48	1-8	1-8
D	17	0	19	0	0	1-8	1-8

A SUITABLE HANGER/MECHANICAL CONNECTION IS REQUIRED AT JOINT F. MINIMUM BEARING LENGTH AT JOINT F = 1-8.

SEE MITEK STANDARD DETAIL MSD2015-H FOR CONNECTION TO JOINT(S) C , D

PROVIDE ANCHORAGE AT BEARING JOINT C FOR 150 LBS FACTORED UPLIFT

UNFACTORED REACTIONS

JT	1ST LCASE COMBINED	MAX./MIN. COMPONENT REACTIONS SNOW	LIVE	PERM.LIVE	WIND	DEAD	SOIL
F	227	180 / 0	0 / 0	0 / 0	0 / 0	47 / 0	0 / 0
C	29	25 / -33	0 / 0	0 / 0	0 / 0	5 / 0	0 / 0
D	14	0 / 0	0 / 0	0 / 0	0 / 0	14 / 0	0 / 0

BRACING
TOP CHORD TO BE SHEATHED OR MAX. PURLIN SPACING = 6.25 FT.
MAX. UNBRACED BOTTOM CHORD LENGTH = 10.00 FT OR RIGID CEILING DIRECTLY APPLIED.

ALL PITCH BREAKS AND PERIMETER CORNER JOINTS MUST BE LATERALLY RESTRAINED.

LOADING
TOTAL LOAD CASES: (5)

CHORDS

MEMB. FR-TO	MAX. FACTORED FORCE (LBS)	FACTORED VERT. LOAD (PLF) FROM	TO	LC1 CSI (LC)	MAX UNBRAC LENGTH
F- B	-311 / 0	0.0	0.0	0.06 (1)	7.81
A- B	0 / 34	-112.4	-112.4	0.15 (1)	10.00
B- C	-26 / 0	-112.4	-112.4	0.14 (1)	6.25
F- E	0 / 0	-18.5	-18.5	0.02 (4)	10.00
E- D	0 / 0	-18.5	-18.5	0.01 (4)	10.00

WEBS

MEMB. FR-TO	MAX. FACTORED FORCE (LBS)	MAX CSI (LC)
B- E	0 / 0	0.00 (1)

CANTILEVER ANALYSIS HAS BEEN CONSIDERED IN THIS DESIGN

DESIGN CRITERIA

SPECIFIED LOADS:

TOP CH.	LL	=	32.5	PSF
	DL	=	6.0	PSF
BOT CH.	LL	=	0.0	PSF
	DL	=	7.4	PSF
TOTAL LOAD		=	45.9	PSF

SPACING = 24.0 IN. C/C

THIS TRUSS IS DESIGNED FOR RESIDENTIAL OR SMALL BUILDING REQUIREMENTS OF PART 9, NBCC 2015

THIS DESIGN COMPLIES WITH:
- PART 9 OF BCBC 2018 , ABC 2019
- PART 9 OF OBC 2012 (2019 AMENDMENT)
- CSA 086-14
- TPIC 2014

DESIGN ASSUMPTIONS
-OVERHANG NOT TO BE ALTERED OR CUT OFF.

(55 % OF 43.9 P.S.F. G.S.L. PLUS 8.4 P.S.F. RAIN LOAD) EQUALS 32.5 P.S.F. SPECIFIED ROOF LIVE LOAD

ALLOWABLE DEFL.(LL)= L/360 (0.19")
CALCULATED VERT. DEFL.(LL) = L/ 999 (0.00")
ALLOWABLE DEFL.(TL)= L/360 (0.19")
CALCULATED VERT. DEFL.(TL) = L/ 999 (0.00")

CSI: TC=0.15/1.00 (A-B:1) , BC=0.02/1.00 (E-F:4) , WB=0.00/1.00 (B-E:1) , SSI=0.11/1.00 (B-C:1)

DOL LUMBER=1.00 NAIL=1.00 LS BEND=1.10 COMP=1.10 SHEAR=1.10 TENS= 1.10

COMPANION LIVE LOAD FACTOR = 1.00

TRUSS PLATE MANUFACTURER IS NOT RESPONSIBLE FOR QUALITY CONTROL IN THE TRUSS MANUFACTURING PLANT .

NAIL VALUES

PLATE	GRIP(DRY) (PSI) MAX	MIN	SHEAR (PLI) MAX	MIN	SECTION (PLI) MAX	MIN
MT20	650	371	1747	788	1987	1873

PLATE PLACEMENT TOL. = 0.250 inches

PLATE ROTATION TOL. = 5.0 Deg.

JSI GRIP= 0.18 (B) (INPUT = 0.90)
JSI METAL= 0.05 (B) (INPUT = 1.00)

LICENSED PROFESSIONAL ENGINEER
06-24-22
H. J. G. ALVES
100009024
PROVINCE OF ONTARIO

Structural component only
DWG# T-2215337

REVIEWED

JOB NAME	TRUSS NAME	QUANTITY	PLY	JOB DESC.	DRWG NO.
423615	J205	1	1	BAYVIEW WELLINGTON TRUSS DESC.	

Tamarack Roof Truss, Burlington

Version 8.530 S Feb 23 2022 MiTek Industries, Inc. Fri Jun 24 16:24:42 2022 Page 1
ID:c3jyj23uDijq_8pvRKbkZpy75XW-_lO2IJdiDUbswvx4n8EcjsdithxhJOyBTW2_MYz31Lp

Scale = 1:13.3

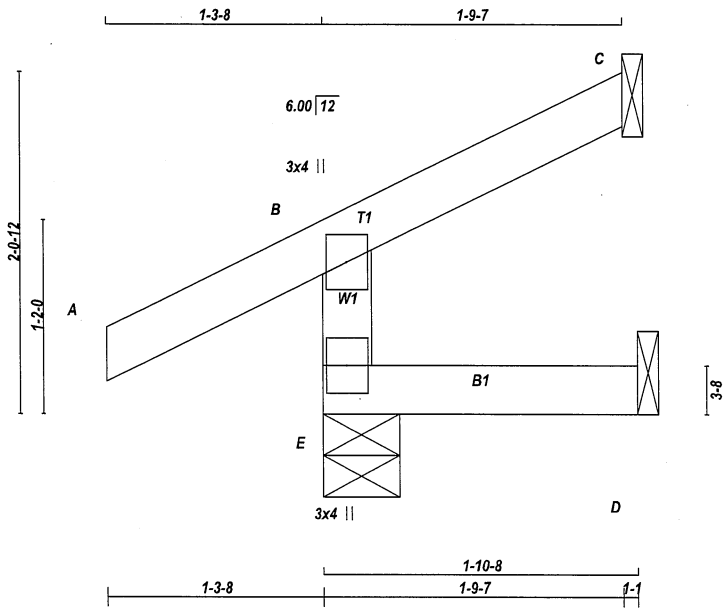

TOTAL WEIGHT = 7 lb
[M]

LUMBER
N. L. G. A. RULES

CHORDS	SIZE		LUMBER	DESCR.
E - B	2x4	DRY	No.2	SPF
A - C	2x4	DRY	No.2	SPF
E - D	2x4	DRY	No.2	SPF

DRY: SEASONED LUMBER.

PLATES (table is in inches)

JT	TYPE	PLATES	W	LEN	Y	X
B	TMV+p	MT20	3.0	4.0		
E	BMV1+p	MT20	3.0	4.0		

NOTES- (1)
1) Lateral braces to be a minimum of 2X4 SPF #2.

DIMENSIONS, SUPPORTS AND LOADINGS SPECIFIED BY FABRICATOR TO BE VERIFIED BY BUILDING DESIGNER

BEARINGS

JT	FACTORED GROSS REACTION VERT	HORZ	MAXIMUM FACTORED GROSS REACTION DOWN	HORZ	UPLIFT	INPUT BRG IN-SX	REQRD BRG IN-SX
E	328	0	328	0	0	5-8	5-8
C	54	0	54	0	-30	1-8	1-8
D	6	0	17	0	-5	1-8	1-8

SEE MITEK STANDARD DETAIL MSD2015-H FOR CONNECTION TO JOINT(S) C , D

PROVIDE ANCHORAGE AT BEARING JOINT C FOR 150 LBS FACTORED UPLIFT
PROVIDE ANCHORAGE AT BEARING JOINT D FOR 150 LBS FACTORED UPLIFT

UNFACTORED REACTIONS

JT	1ST LCASE COMBINED	MAX./MIN. COMPONENT REACTIONS SNOW	LIVE	PERM.LIVE	WIND	DEAD	SOIL
E	226	179 / 0	0 / 0	0 / 0	0 / 0	47 / 0	0 / 0
C	37	31 / -23	0 / 0	0 / 0	0 / 0	7 / 0	0 / 0
D	6	0 / -10	0 / 0	0 / 0	0 / 0	12 / 0	0 / 0

BEARING MATERIAL TO BE SPF NO.2 OR BETTER AT JOINT(S) E, C

BRACING
TOP CHORD TO BE SHEATHED OR MAX. PURLIN SPACING = 6.25 FT.
MAX. UNBRACED BOTTOM CHORD LENGTH = 10.00 FT OR RIGID CEILING DIRECTLY APPLIED.

ALL PITCH BREAKS AND PERIMETER CORNER JOINTS MUST BE LATERALLY RESTRAINED.

LOADING
TOTAL LOAD CASES: (5)

CHORDS

MEMB. FR-TO	MAX. FACTORED FORCE (LBS)	FACTORED VERT. LOAD (PLF) FROM	TO	LC1 MAX CSI (LC)	MAX. UNBRAC LENGTH
E- B	-299 / 0	0.0	0.0	0.05 (5)	7.81
A- B	0 / 34	-112.4	-112.4	0.15 (1)	10.00
B- C	-21 / 0	-112.4	-112.4	0.11 (1)	6.25
E- D	0 / 0	-18.5	-18.5	0.04 (5)	10.00

WEBS

MEMB. FR-TO	MAX. FACTORED FORCE (LBS)	MAX CSI (LC)

CANTILEVER ANALYSIS HAS BEEN CONSIDERED IN THIS DESIGN

DESIGN CRITERIA

SPECIFIED LOADS:

TOP CH.	LL	=	32.5	PSF
	DL	=	6.0	PSF
BOT CH.	LL	=	0.0	PSF
	DL	=	7.4	PSF
TOTAL LOAD		=	45.9	PSF

SPACING = 24.0 IN. C/C

THIS TRUSS IS DESIGNED FOR RESIDENTIAL OR SMALL BUILDING REQUIREMENTS OF PART 9, NBCC 2015

THIS DESIGN COMPLIES WITH:
- PART 9 OF BCBC 2018 , ABC 2019
- PART 9 OF OBC 2012 (2019 AMENDMENT)
- CSA 086-14
- TPIC 2014

DESIGN ASSUMPTIONS
-OVERHANG NOT TO BE ALTERED OR CUT OFF.

(55 % OF 43.9 P.S.F. G.S.L. PLUS 8.4 P.S.F. RAIN LOAD) EQUALS 32.5 P.S.F. SPECIFIED ROOF LIVE LOAD

ALLOWABLE DEFL.(LL)= L/360 (0.19")
CALCULATED VERT. DEFL.(LL) = L/ 999 (0.00")
ALLOWABLE DEFL.(TL)= L/360 (0.19")
CALCULATED VERT. DEFL.(TL) = L/ 999 (0.00")

CSI: TC=0.15/1.00 (A-B:1) , BC=0.04/1.00 (D-E:5) , WB=0.00/1.00 (n/a:0) , SSI=0.11/1.00 (A-B:1)

DOL LUMBER=1.00 NAIL=1.00 LS BEND=1.10 COMP=1.10 SHEAR=1.10 TENS= 1.10

COMPANION LIVE LOAD FACTOR = 1.00

AUTOSOLVE RIGHT HEEL ONLY

TRUSS PLATE MANUFACTURER IS NOT RESPONSIBLE FOR QUALITY CONTROL IN THE TRUSS MANUFACTURING PLANT .

NAIL VALUES

PLATE	GRIP(DRY) (PSI) MAX	MIN	SHEAR (PLI) MAX	MIN	SECTION (PLI) MAX	MIN
MT20	650	371	1747	788	1987	1873

PLATE PLACEMENT TOL. = 0.250 inches

PLATE ROTATION TOL. = 5.0 Deg.

JSI GRIP= 0.12 (E) (INPUT = 0.90)
JSI METAL= 0.08 (B) (INPUT = 1.00)

LICENSED PROFESSIONAL ENGINEER
06-24-22
H. J. G. ALVES
100009024
PROVINCE OF ONTARIO

Structural component only
DWG# T-2215338

REVIEWED

TOE-NAIL CAPACITY DETAILS

LATERAL AND WITHDRAWAL RESISTANCE OF BEARING ANCHORAGE BY TOE-NAILS

			SPF	D. FIR	SPF	D. FIR
COMMON WIRE	3.00	0.144	122	139	30	42
	3.25	0.144	127	144	32	45
	3.50	0.160	152	173	38	52
COMMON SPIRAL	3.00	0.122	96	108	26	36
	3.25	0.122	97	108	28	40
	3.50	0.152	142	161	36	50
3.25" Gun nail	3.25	0.120	94	105	28	39

Note: If using truss with D. Fir lumber and SPF bearing plate, use tabulated SPF values in table.

Nail type:	**Common wire**	**Common spiral**	**Common wire**	**Common spiral**	**Gun Nail**
Diameter (in.)	0.160	0.152	0.144	0.122	0.120
Length (in.)	3.50	3.50	3.00	3.00	3.25
LUMBER			**MAXIMUM NUMBER OF TOE-NAILS**		
2x4 SPF	2	2	3	3	3
2x6 SPF	4	4	4	5	5
2x4 D. FIR	2	2	2	2	2
2x6 D. FIR	3	3	3	4	4

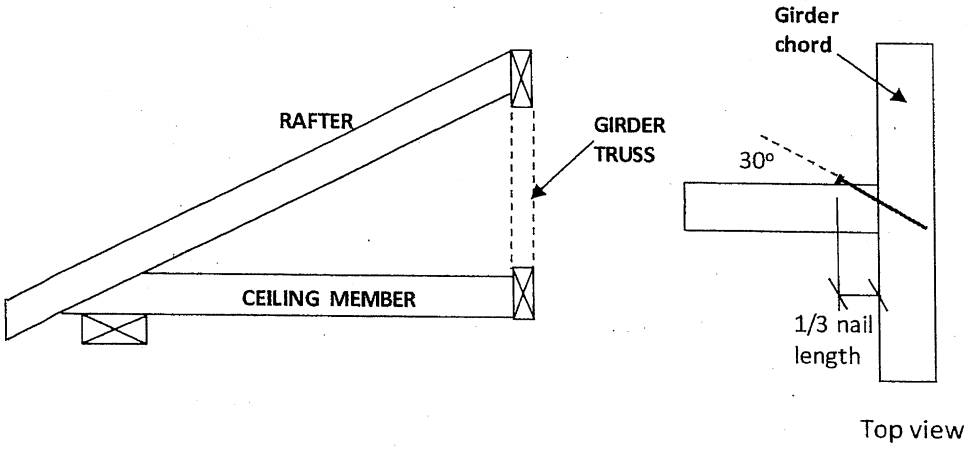

Figure 1: Toe-Nailing Rafter / Ceiling Member to Girder Truss

PEO
Certificate No. 10889485

LICENSED PROFESSIONAL ENGINEER
C. Cordogiannis
90553736
PROVINCE OF ONTARIO

December 21, 2020

©2020 MiTek Canada Inc., 240 Stirling Crescent, Bradford, Ontario, L3Z 4L5 | (800) 268-3434, www.mitek.ca

REVIEWED

TOE-NAIL CAPACITY DETAILS

Figure 2: Toe-Nail Anchorage to Bearing Plate for Uplift

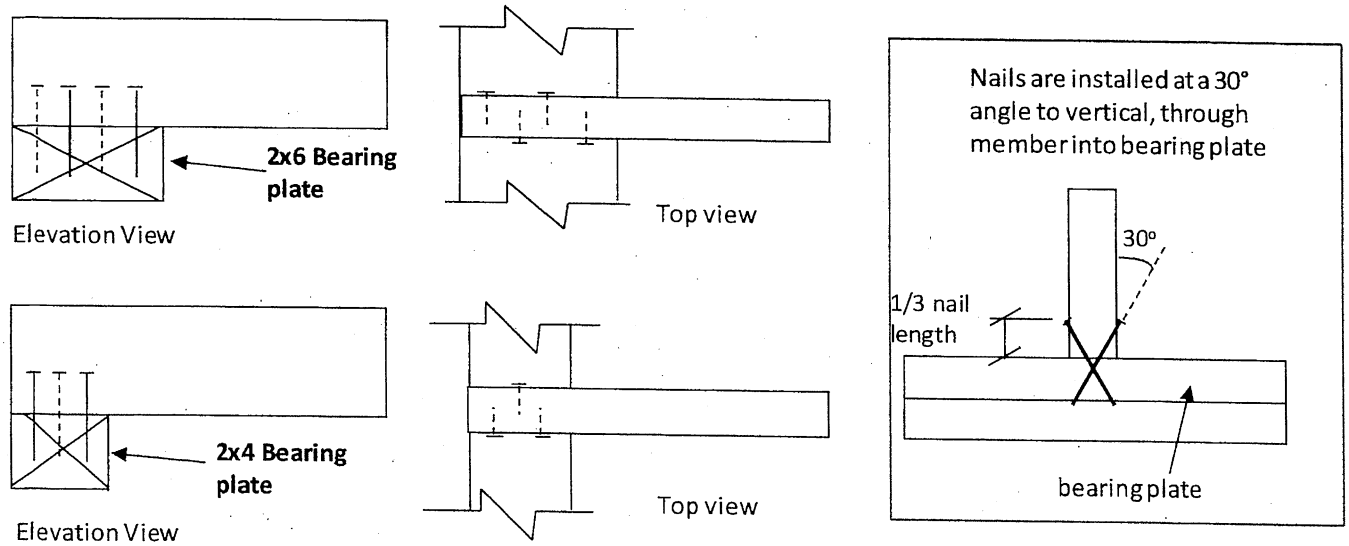

NOTES:

1. Rafter and ceiling members may be connected to top and bottom chords of girder truss by toe-nailing the members into the girder chords (see fig. 1), provided the factored vertical reactions of the supported members do not exceed the lateral resistance of the toe-nails. Mechanical connectors (hangers) are required if factored vertical reactions exceed the toe-nail capacity, or if the connection must resist horizontal loads (loads perpendicular to the face of girder or rafter).

2. Trusses, rafters or ceiling members may be anchored to the bearing plate with toe-nails (see fig. 2), provided that the factored uplift reactions due to **wind or earthquake loads** do not exceed the **withdrawal resistance of the toe-nails.** Mechanical anchors (tie-downs) are required for reactions that exceed the toe-nail withdrawal capacity. Toe-nail anchorage to bearing plates is **NOT** permitted if uplift reactions are generated from gravity loads (snow, floor live, dead).

3. Tabulated toe-nail resistances on page 1 are for **one** toe-nail. Multiply unit values by the number of nails used in the connection. Maximum number of nails in a connection shall not exceed the tabulated limits shown on page 1 for a given lumber size /species.

4. Nail values are based on specific gravity of G = 0.42 (SPF) and G = 0.49 (D. Fir).

5. Toe-nails shall be driven at approximately 1/3 the nail length from the edge of the joist/truss chord and driven at an angle of 30° to the grain of the member.

6. For wind / earthquake loads, tabulated lateral resistances may be multiplied by 1.15 (K_D factor). No increases are permitted for tabulated withdrawal resistances.

7. Lumber must be dry (< 19% moisture content) at the time of nail installation.

8. Nail values in this table comply with CSA O86-19, Clause 12.9.

PEO
Certificate No. 10889485

LICENSED PROFESSIONAL ENGINEER
C. Cordogiannis
90553736
PROVINCE OF ONTARIO

December 21, 2020

©2020 MiTek Canada Inc., 240 Stirling Crescent, Bradford, Ontario, L3Z 4L5 | (800) 268-3434, www.mitek.ca

REVIEWED

LUL/LUS/LJS/HUS/HHUS/HGUS

SIMPSON Strong-Tie®

Standard and Double-Shear Joist Hangers

VALUE ENGINEERED

This product is preferable to similar connectors because of a) easier installation, b) higher capacities, c) lower installed cost, or a combination of these features.

Most hangers in this series have double-shear nailing — an innovation that distributes the load through two points on each joist nail for greater strength. This allows for fewer nails, faster installation, and the use of all common nails for the same connection. (Do not bend or remove tabs)

Double-shear hangers range from the light capacity LUS hangers to the highest capacity HGUS hangers. For medium load truss applications, the HUS offers a lower cost alternative and easier installation than the HGUS hangers, while providing greater load capacity and bearing than the LUS.

Material: See table on pp. 217–218.

Finish: Galvanized. Some products available in stainless steel or ZMAX® coating; see Corrosion Information, pp. 18–20.

Installation:

- Use all specified fasteners; see General Notes.
- Nails must be driven at an angle through the joist or truss into the header to achieve the tabulated resistances (except LUL).
- Where 16d commons are specified, 10d commons may be used at 0.83 of the tabulated factored resistance.
- Not designed for welded or nailer applications.
- With single ply 2x carrying members, use 10d x 1½" nails into the header and 10d commons into the joist, and reduce the resistance to 0.64 of the table value where 16d nails are specified and 0.77 where 10d nails are specified.

Options:

- LUS, LJS, LUL and HUS hangers cannot be modified.
- Other sizes available; consult your Simpson Strong-Tie representative.
- See Hanger Options information on pp. 105–107.

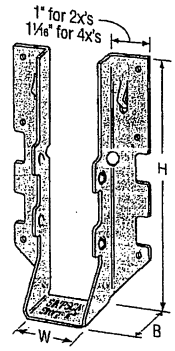

LUS28

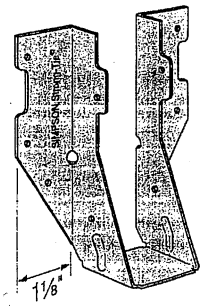

LU26L

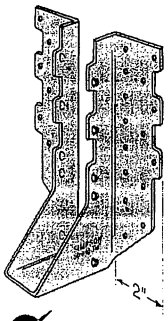

HUS210
(HUS26, HUS28, and HHUS similar)

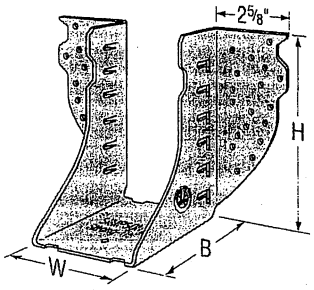

HGUS28-2

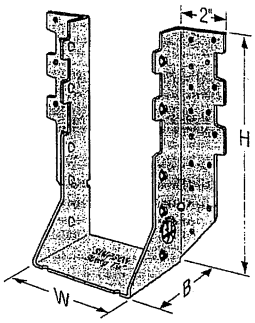

HHUS210-2

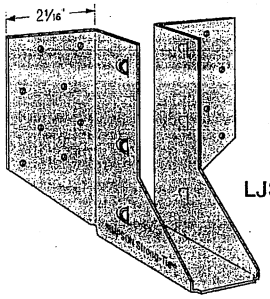

LJS26DS

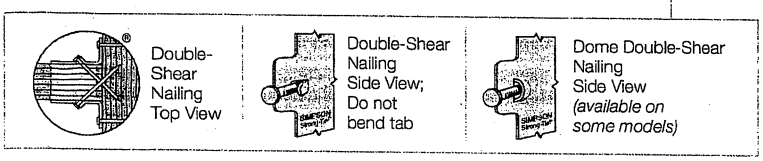

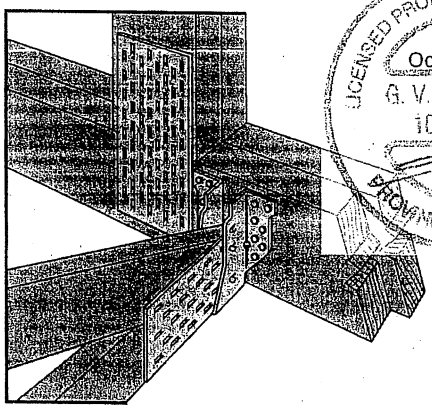

Typical HUS26 Installation with Reduced Heel Height
(Truss Designer to provide fastener quantity for connecting multiple members together)

LICENSED PROFESSIONAL ENGINEER
Oct. 14, 2020
G. V. LUBARSKY
100044463
PROVINCE OF ONTARIO

Plated Truss Connectors

C-C-CAN2020 ©2020 SIMPSON STRONG-TIE COMPANY INC.

REVIEWED

TECHNICAL BULLETIN

LUS – Double Shear Joist Hangers

SIMPSON Strong-Tie®

All LUS hangers have double shear nailing. This patented innovation distributes the load through two points on each joist nail for greater strength. It also allows the use of fewer nails, faster installation and the use of common nails for all connections.

Material: 18 gauge

Finish: G90 galvanized

Design:

- Factored resistances are in accordance with CSA O86-14.
- Uplift resistances have been increased 15%. No further increase is permitted.
- Wood shear is not considered in the factored resistances given. The specifier must ensure that the joist and header capacities are capable of withstanding these loads.

Installation:

- Use all specified fasteners.
- Nails: 16d = 0.162" dia. x 3½" long common wire, 10d = 0.148" x 3" long common wire.
- Double shear nails must be driven at an angle through the joist or truss into the header to achieve the table loads.
- Not designed for welded or nailer applications.

Options:

- These hangers cannot be modified

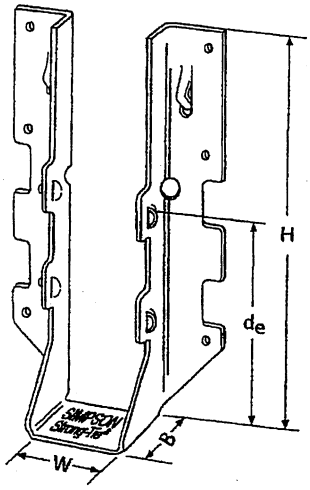

LUS28

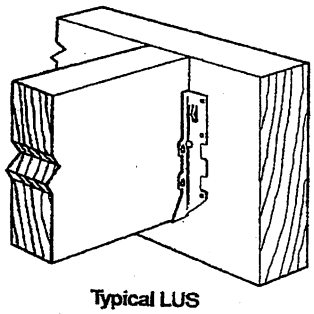

Typical LUS Installation

Model No.	Ga.	Dimensions (in.)				Fasteners		Factored Resistance (lb.)			
								D.Fir-L		S-P-F	
		W	H	B	d_e[1]	Face	Joist	Uplift (K_D=1.15)	Normal (K_D=1.00)	Uplift (K_D=1.15)	Normal (K_D=1.00)
LUS24	18	1 9/16	3 1/8	1 3/4	1 15/16	(4) 10d	(2) 10d	710	1630	645	1155
LUS24-2	18	3 1/8	3 1/8	2	1 13/16	(4) 16d	(2) 16d	835	2020	590	1435
LUS26	18	1 9/16	4 3/4	1 3/4	3 5/8	(4) 10d	(4) 10d	1420	2170	1290	1630
LUS26-2	18	3 1/8	4 7/8	2	4	(4) 16d	(4) 16d	1720	2595	1545	1920
LUS26-3	18	4 5/8	4 3/16	2	3 1/4	(4) 16d	(4) 16d	1720	2595	1545	2340
LUS28	18	1 9/16	6 5/8	1 3/4	3 3/4	(6) 10d	(6) 10d	1420	2520	1290	1790
LUS28-2	18	3 1/8	7	2	4	(6) 16d	(4) 16d	1720	3325	1545	2575
LUS28-3	18	4 5/8	6 1/4	2	3 1/4	(6) 16d	(4) 16d	1720	3325	1545	2375
LUS210	18	1 9/16	7 13/16	1 3/4	3 7/8	(8) 10d	(4) 10d	1420	2785	1290	2210
LUS210-2	18	3 1/8	9	2	6	(8) 16d	(6) 16d	2580	4500	2320	3195
LUS210-3	18	4 5/8	8 3/16	2	5 1/4	(8) 16d	(6) 16d	2580	3345	2320	2375

1. d_e is the distance from the seat of the hanger to the highest joist nail.

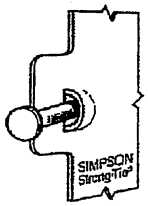

Dome Double Shear Nailing prevents tabs breaking off (available on some models).

U.S. Patent 5,603,580

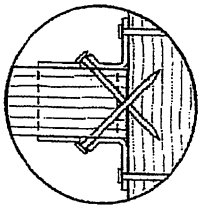

Double Shear Nailing Top View.

LICENSED PROFESSIONAL ENGINEER
04/01/2020
B. D. BUNTING
PROVINCE OF ONTARIO

LIMIT STATES DESIGN

This technical bulletin is effective until June 30, 2022, and reflects information available as of April 1, 2020. This information is updated periodically and should not be relied upon after June 30, 2022. Contact Simpson Strong-Tie for current information and limited warranty or see strongtie.com.

© 2020 Simpson Strong-Tie Company Inc.

T-SPECLUS20 3/20 exp. 6/22

(800) 999-5099
strongtie.com

REVIEWED

TECHNICAL BULLETIN

HUS/LJS – Double Shear Joist Hangers

SIMPSON Strong-Tie®

All hangers have double shear nailing. This patented innovation distributes the load through two points on each joist nail for greater strength. It also allows the use of fewer nails, faster installation and the use of common nails for all connections. Do not bend or remove tabs.

Material: See table

Finish: G90 galvanized

Design:

- Factored resistances are in accordance with CSA O86 -14.
- Uplift resistances have been increased 15%. No further increase is permitted.
- Wood shear is not considered in the factored resistances given. The specifier must ensure that the joist and header capacities are capable of withstanding these loads.

Installation:

- Use all specified fasteners
- Nails: 16d = 0.162" dia. x 3½" long common wire
- Double shear nails must be driven at an angle through the joist or truss into the header to achieve the table loads
- Not designed for welded or nailer applications

Options:

- See current catalogue for options

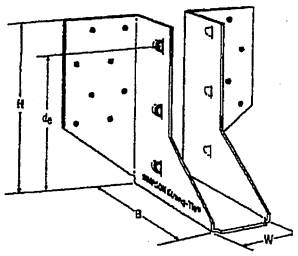

LJS26DS

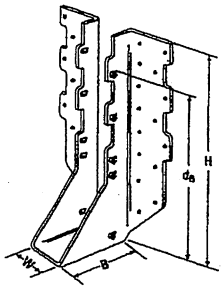

HUS210
(HUS26, HUS28, similar)

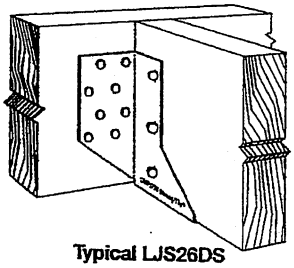

Typical LJS26DS Installation

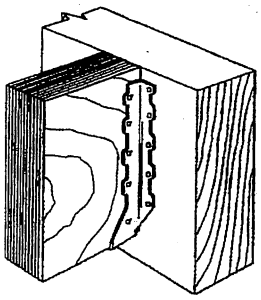

Typical HUS Installation

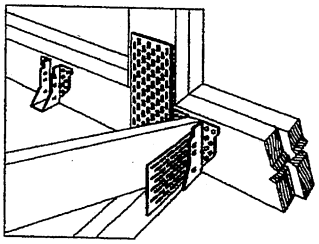

Typical HUS Installation
(Truss Designer to provide fastener quantity for connecting multiple members together)

Model No.	Ga.	Dimensions (in.)				Fasteners		Factored Resistance (lb.)			
								D.Fir-L.		S-P-F	
		W	H	B	d_e[1]	Face	Joist	Uplift (K_D=1.15) lb.	Normal (K_D=1.00) lb.	Uplift (K_D=1.15) lb.	Normal (K_D=1.00) lb.
LJS26DS	18	1 9/16	5	3½	4⅝	(16) 16d	(6) 16d	2055	4265	1460	4115
HUS26	16	1⅝	5⅜	3	3 15/16	(14) 16d	(6) 16d	2705	4940	2065	3875
HUS28	16	1⅝	7 3/32	3	6 3/32	(22) 16d	(8) 16d	3605	5365	2675	4345
HUS210	16	1⅝	9 3/32	3	7 31/32	(30) 16d	(10) 16d	4505	5795	4010	4740
HUS1.81/10	16	1 13/16	9	3	8	(30) 16d	(10) 16d	4505	6450	4010	5200

1. d_e is the distance from the seat of the hanger to the highest joist nail.

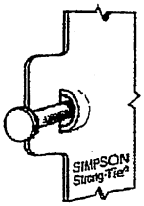

Dome Double Shear Nailing prevents tabs breaking off (available on some models).

U.S. Patent 5,603,580

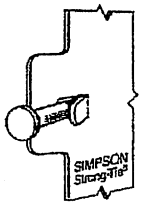

Double Shear Nailing Side View. Do not bend tab back.

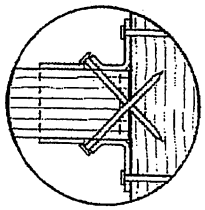

Double Shear Nailing Top View.

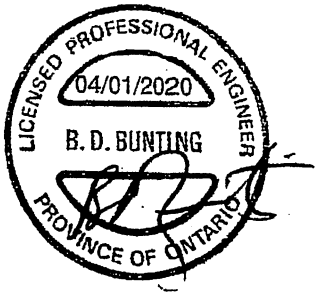

LIMIT STATES DESIGN

This technical bulletin is effective until June 30, 2022, and reflects information available as of April 1, 2020. This information is updated periodically and should not be relied upon after June 30, 2022. Contact Simpson Strong-Tie for current information and limited warranty or see strongtie.com.

© 2020 Simpson Strong-Tie Company Inc.

T-SPECHUS20 3/20 exp. 6/22

(800) 999-5099
strongtie.com

REVIEWED

TECHNICAL BULLETIN

HGUS – Double Shear Joist Hangers

SIMPSON Strong-Tie®

All HGUS hangers have double shear nailing. This patented innovation distributes the load through two points on each joist nail for greater strength. It also allows the use of fewer nails, faster installation and the use of common nails for all connections. Do not bend or remove tabs.

Material: 12 gauge

Finish: G90 galvanized

Design:

- Factored resistances are in accordance with CSA O86-14.
- Uplift resistances have been increased 15%. No further increase is permitted.
- Wood shear is not considered in the factored resistances given. The specifier must ensure that the joist and header capacities are capable of withstanding these loads.

Installation:

- Use all specified fasteners
- Nails: 16d = 0.162" dia x 3½" long common wire
- Double shear nails must be driven at an angle through the joist or truss into the header to achieve the table loads
- Not designed for welded or nailer applications

Options:

- See current catalogue for options

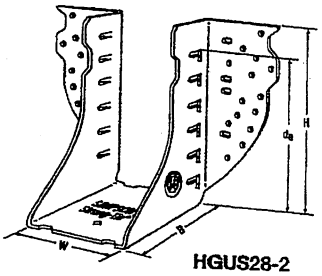

HGUS28-2

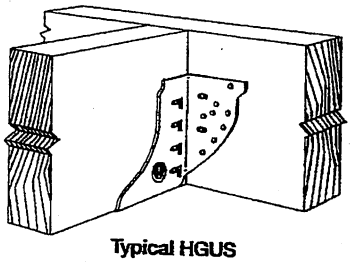

Typical HGUS Installation

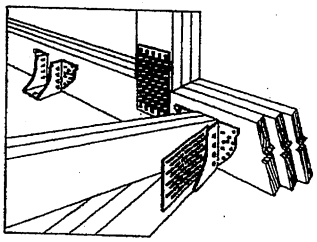

Typical HGUS Installation (Truss Designer to provide fastener quantity for connecting multiple members together)

Model No.	Ga.	Dimensions (in.)				Fasteners		Factored Resistance (lb.)			
								D.Fir-L		S-P-F	
		W	H	B	d_e[1]	Face	Joist	Uplift (K_D=1.15)	Normal (K_D=1.00)	Uplift (K_D=1.15)	Normal (K_D=1.00)
HGUS26	12	1⅝	5⅜	5	4 5/32	(20) 16d	(8) 16d	2685	6625	2685	5700
HGUS26-2	12	3 5/16	5 7/16	4	4⅛	(20) 16d	(8) 16d	4385	8950	3100	6355
HGUS26-3	12	4 15/16	5½	4	4⅛	(20) 16d	(8) 16d	4385	8950	3100	6355
HGUS26-4	12	6 9/16	5 7/16	4	4⅛	(20) 16d	(8) 16d	4385	8950	3100	6355
HGUS28	12	1⅝	7⅛	5	6⅛	(36) 16d	(12) 16d	3310	7675	3100	6900
HGUS28-2	12	3 5/16	7 3/16	4	6⅛	(36) 16d	(12) 16d	6070	12980	4310	9215
HGUS28-3	12	4 15/16	7¼	4	6⅜	(36) 16d	(12) 16d	6070	12980	4310	9215
HGUS28-4	12	6 9/16	7 3/16	4	6⅛	(36) 16d	(12) 16d	6070	12980	4310	9215
HGUS210	12	1⅝	9⅛	5	7⅞	(46) 16d	(16) 16d	3535	11070	2510	8090
HGUS210-2	12	3 5/16	9 3/16	4	8⅛	(46) 16d	(16) 16d	6840	14015	4855	10270
HGUS210-3	12	4 15/16	9¼	4	8⅜	(46) 16d	(16) 16d	6840	14645	4855	10400
HGUS210-4	12	6 9/16	9 3/16	4	8⅛	(46) 16d	(16) 16d	6840	14645	4855	10400
HGUS212-4	12	6 9/16	10⅝	4	10⅛	(56) 16d	(20) 16d	7640	14995	5425	10645
HGUS214-4	12	6 9/16	12⅝	4	11⅛	(66) 16d	(22) 16d	10130	16400	7195	11645

1. d_e is the distance from the seat of the hanger to the highest joist nail.

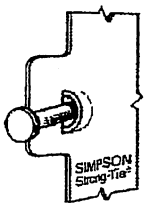

Dome Double Shear Nailing prevents tabs breaking off (available on some models).

U.S. Patent 5,603,580

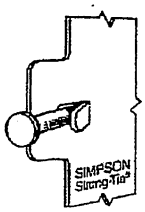

Double Shear Nailing Side View. Do not bend tab back.

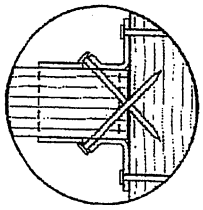

Double Shear Nailing Top View.

LIMIT STATES DESIGN

This technical bulletin is effective until June 30, 2022, and reflects information available as of April 1, 2020. This information is updated periodically and should not be relied upon after June 30, 2022. Contact Simpson Strong-Tie for current information and limited warranty or see strongtie.com.

© 2020 Simpson Strong-Tie Company Inc.

T-SPECHGUS20 3/20 exp. 6/22

(800) 999-5099
strongtie.com

REVIEWED

TECHNICAL BULLETIN

HHUS – Double Shear Joist Hangers

SIMPSON Strong-Tie®

All HHUS hangers have double shear nailing. This patented innovation distributes the load through two points on each joist nail for greater strength. It also allows the use of fewer nails, faster installation and the use of common nails for all connections. Do not bend or remove tabs.

Material: 14 gauge

Finish: G90 galvanized

Design:

- Factored resistances are in accordance with CSA O86-14.
- Uplift resistances have been increased 15%. No further increase is permitted.
- Wood shear is not considered in the factored resistances given. The specifier must ensure that the joist and header capacities are capable of withstanding these loads.

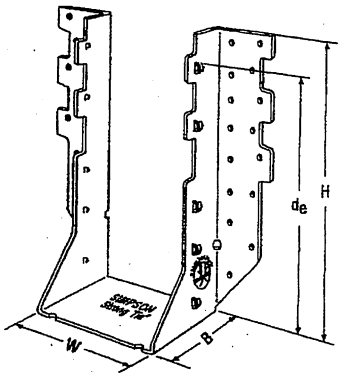

HHUS410

Installation:

- Use all specified fasteners
- Nails: 16d = 0.162" dia. x 3½" long common wire
- Double shear nails must be driven at an angle through the joist or truss into the header to achieve the table loads
- Not designed for welded or nailer applications

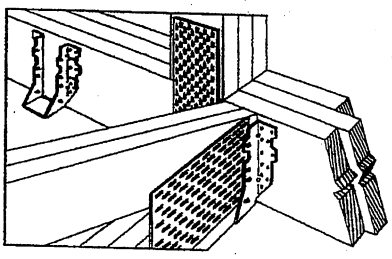

Typical HHUS Installation (Truss Designer to provide fastener quantity for connecting multiple members together)

Options:

- See current catalogue for options

Model No.	Ga.	Dimensions (in.)				Fasteners		Factored Resistance (lb.)			
								D.Fir-L		S-P-F	
		W	H	B	d_e[1]	Face	Joist	Uplift (K_D=1.15)	Normal (K_D=1.00)	Uplift (K_D=1.15)	Normal (K_D=1.00)
HHUS26-2	14	3 5/16	5 13/16	3	3 15/16	(14) 16d	(6) 16d	2850	7335	2065	5205
HHUS28-2	14	3 5/16	7 7/32	3	6 5/32	(22) 16d	(8) 16d	3765	8940	2675	6345
HHUS210-2	14	3 5/16	9 3/32	3	8	(30) 16d	(10) 16d	4670	9660	4235	7000
HHUS210-3	14	4 11/16	9	3	7 15/16	(30) 16d	(10) 16d	4670	9670	4235	6865
HHUS210-4	14	6 1/8	8 29/32	3	7 27/32	(30) 16d	(10) 16d	4670	10155	4235	7210
HHUS46	14	3 5/8	5 13/32	3	3 15/16	(14) 16d	(6) 16d	2540	7335	2065	5205
HHUS48	14	3 5/8	7 1/8	3	6 1/8	(22) 16d	(8) 16d	3765	8940	2675	6345
HHUS410	14	3 5/8	9	3	8	(30) 16d	(10) 16d	4670	9855	4235	7000
HHUS5.50/10	14	5 1/2	9	3	8	(30) 16d	(10) 16d	4670	10155	4235	7210
HHUS7.25/10	14	7 1/4	9	3 5/16	7 29/32	(30) 16d	(10) 16d	4670	10155	3370	7210

1. d_e is the distance from the seat of the hanger to the highest joist nail.

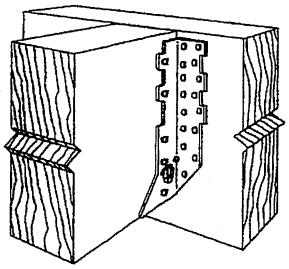

Typical HHUS Installation

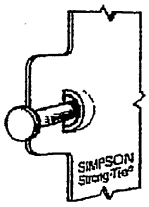

Dome Double Shear Nailing prevents tabs breaking off (available on some models).

U.S. Patent 5,603,580

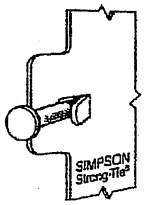

Double Shear Nailing Side View. Do not bend tab back.

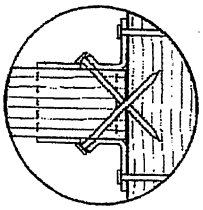

Double Shear Nailing Top View.

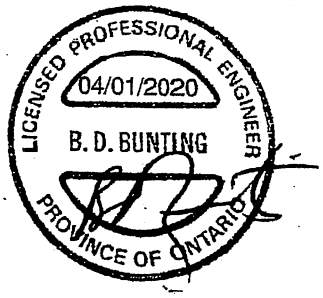

LIMIT STATES DESIGN

This technical bulletin is effective until June 30, 2022, and reflects information available as of April 1, 2020. This information is updated periodically and should not be relied upon after June 30, 2022. Contact Simpson Strong-Tie for current information and limited warranty or see strongtie.com.

© 2020 Simpson Strong-Tie Company Inc.

T-SPECHHUS20 3/20 exp. 6/22

(800) 999-5099
strongtie.com

REVIEWED

H/TSP

Seismic and Hurricane Ties (cont.)

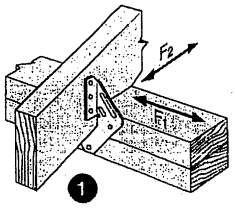

1 H1 Installation

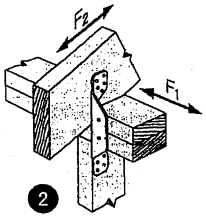

2 H2A Installation

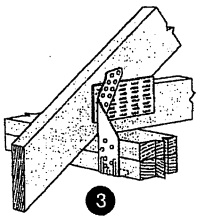

3 TSP Installation

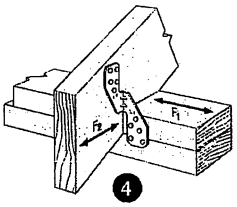

4 H2.5A Installation
(Nails into both top plates)

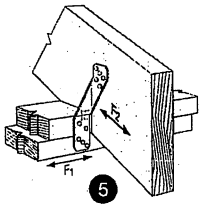

5 H2.5T Installation
(Nails into both top plates)

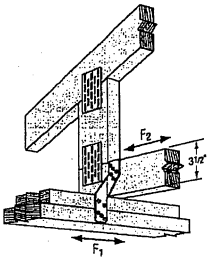

6 H2.5T Installation

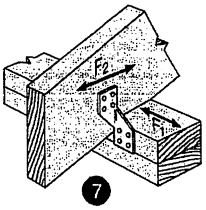

7 H3 Installation
(Nails into upper top plate)

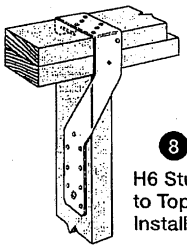

8 H6 Stud to Top Plate Installation

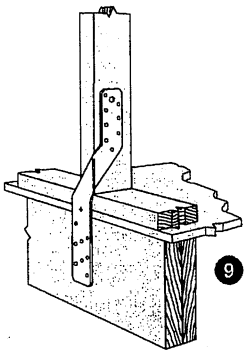

9 H6 Stud to Band Joist Installation

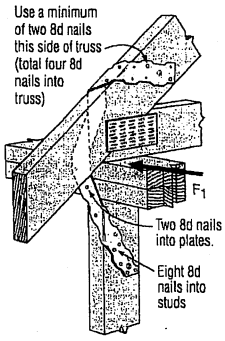

10 H7Z Installation

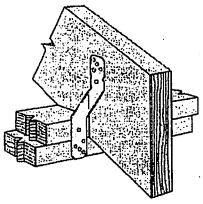

11 H8 Attaching Rafter to Double Top Plates

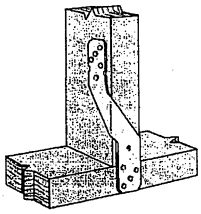

12 H8 attaching Stud to Sill
((4) 8d into plate, (5) 8d into stud)

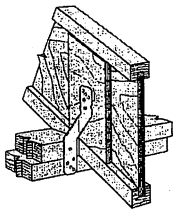

13 H8 attaching I-Joist to Double Top Plates

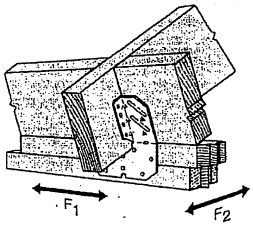

14 H10A Field-Bent Installation

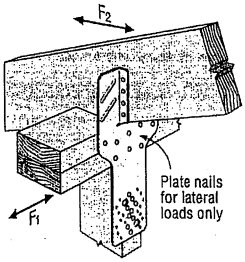

15 H10S Installation

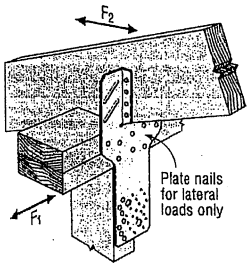

16 H10S Installation with Stud Offset

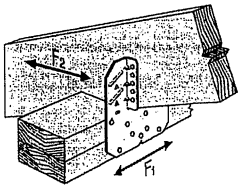

17 H10A Installation

H10A optional positive angle nailing connects shear blocking to rafter. Use 8d common nails. Slot allows maximum field-bending up to a pitch of 6/12, use 75% of the table uplift value; bend one time only.

1

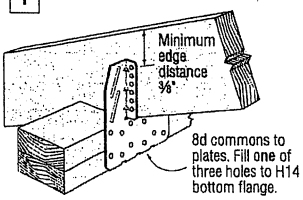

18 H14 Installation to Double Top Plates

2

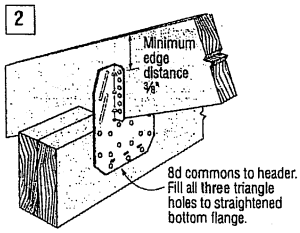

19 H14 Installation to Double 2x Header

Avoid a Misinstallation

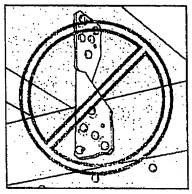

Do not make new holes or overdrive nails.

C-C-CAN2018 ©2017 SIMPSON STRONG-TIE COMPANY INC.

REVIEWED

H/TSP

Seismic and Hurricane Ties

Simpson Strong-Tie® hurricane ties provide a positive connection between truss/rafter and the wall of the structure to resist wind and seismic forces. New additions to the line provide even more options.

- H10AR — The heavy-duty design of the H10A available with a 2" wide throat to accommodate rough lumber
- H10A-2 — The H10A design with a 3" throat for double 2x members
- H2ASS, H2.5ASS and H10ASS — Popular ties now available in stainless steel

Material: See table

Finish: Galvanized. H7Z and H11Z — ZMAX® coating. Some models available in stainless steel or ZMAX; see Corrosion Information, pp. 20–24 or visit **strongtie.com**.

Installation:

- Use all specified fasteners; see General Notes.
- H1 can be installed with flanges facing inward (reverse of H1 installation drawing; number 1).
- H2.5T, H3 and H6 ties are shipped in equal quantities of right and left versions (right versions shown).
- Hurricane ties do not replace solid blocking.
- When installing ties on plated trusses (on the side opposite the truss plate) do not fasten through the truss plate from behind. This can force the truss plate off of the truss and compromise truss performance.
- H10A optional nailing to connect shear blocking, use 8d nails. Slots allow maximum field bending up to a pitch of 6:12, use H10A sloped loads for field bent installation.

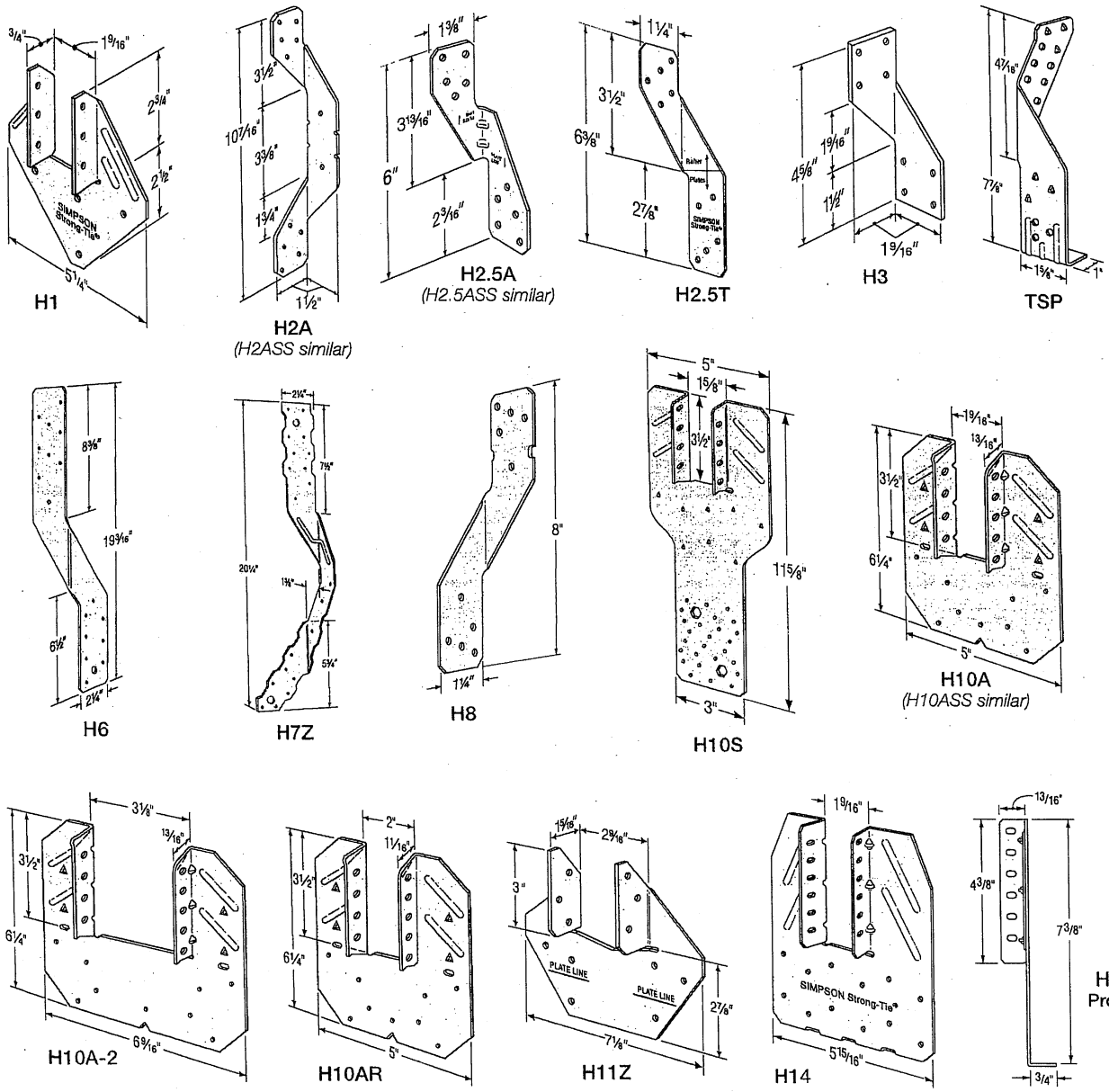

C-C-CAN2018 ©2017 SIMPSON STRONG-TIE COMPANY INC.

REVIEWED

TECHNICAL BULLETIN

H – Seismic and Hurricane Ties

SIMPSON Strong-Tie®

The H connector series provides wind and seismic ties for trusses and rafters.

Material: 18 gauge **Finish:** G90 galvanized

Design: • Factored resistances are in accordance with CSA O86-14
- Factored resistances have been increased 15%. No further increase is permitted.

Installation: • Use all specified fasteners
- Nails: 8d = 0.131" dia. x 2½" long common wire, 8d x 1½" = 0.131" x 1½ long, 10d x 1½" = 0.146" x 1½" long
- H1 can be installed with flanges facing outwards
- Hurricane ties do not replace solid blocking

Factored resistances for more than one direction for a single connection cannot be added together. A factored load which can be divided into components in the directions given must be evaluated as follows: Factored Shear/Resisting Shear + Factored Tension/Resisting Tension ≤ 1.0.

Hurricane Tie Installations to Achieve Twice the Load (Top View)

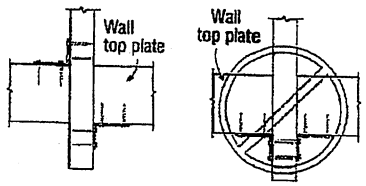

Install diagonally across from each other for minimum 2x truss.

Nailing into both sides of a single ply 2x truss may cause the wood to split.

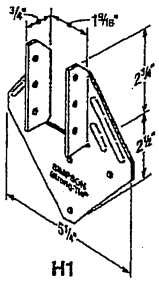

H1

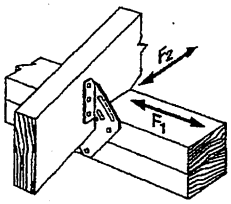

H1 Installation

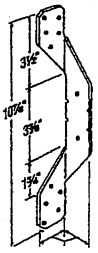

H2A

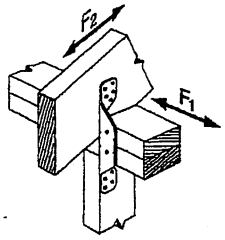

H2A Installation

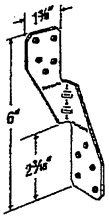

H2.5A

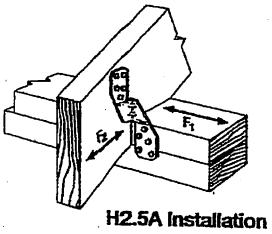

H2.5A Installation

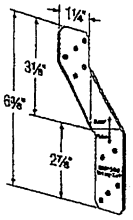

H2.5T

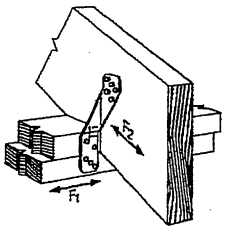

H2.5T Installation (Nails into both top plates)

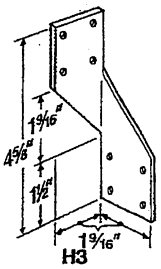

H3

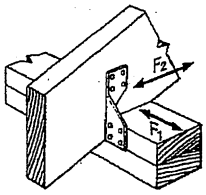

H3 Installation

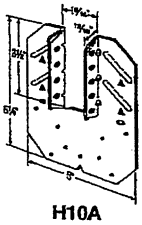

H10A

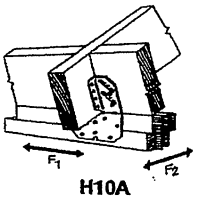

H10A Installation

Model No.	Ga.	Fasteners			Factored Resistance (lb.)					
					D.Fir-L			S-P-F		
		To Rafter	To Plates	To Studs	Uplift	Normal F_1	Normal F_2	Uplift	Normal F_1	Normal F_2
					(K_D=1.15)			(K_D=1.15)		
H1	18	(6) 8d x 1½"	(4) 8d	—	740	685	300	680	485	215
H2A	18	(5) 8d x 1½"	(2) 8d x 1½"	(5) 8d x 1½"	830	220	75	590	155	55
H2.5A	18	(5) 8d	(5) 8d	—	805	160	160	755	160	160
H2.5T	18	(5) 8d	(5) 8d	—	835	175	240	740	160	210
H3	18	(4) 8d	(4) 8d	—	740	180	265	615	125	190
H10A	18	(9) 10d x 1½"	(9) 10d x 1½"	—	1735	795	410	1505	565	290

1. Factored resistances have been increased 15% for earthquake or wind loading with no further increase allowed.
2. Factored resistances are for one anchor. A minimum rafter thickness of 2½" must be used when framing anchors are installed on each side of the joist and on the same side of the plate.
3. When cross-grain bending or cross-grain tension cannot be avoided, mechanical reinforcement to resist such forces should be considered.
4. Hurricane ties are shown installed on the outside of the wall for clarity. Installation on the inside of the wall is acceptable. For a Continuous Load Path, connections must be on same side of the wall.

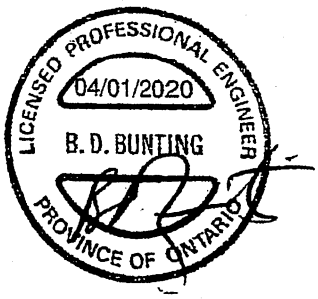

LIMIT STATES DESIGN

This technical bulletin is effective until June 30, 2022, and reflects information available as of April 1, 2020. This information is updated periodically and should not be relied upon after June 30, 2022. Contact Simpson Strong-Tie for current information and limited warranty or see strongtie.com.

© 2020 Simpson Strong-Tie Company Inc.

(800) 999-5099
strongtie.com

REVIEWED

TECHNICAL BULLETIN

TC – Truss Connectors

SIMPSON Strong-Tie®

The TC truss connector is an ideal connector for scissor trusses and can allow horizontal movement up to 1¼". The TC also attaches plated trusses to top plates or sill plates to resist uplift forces. Typically used on one or both ends of truss as determined by the building designer.

Material: 16 gauge

Finish: G90 galvanized

Design: Factored resistances are in accordance with CSA 086-14

Installation:

- Use all specified fasteners.
- Nails: 10d = 0.148" dia. x 3" long common wire, 10d x 1½ = 0.148" dia. x 1½" long.
- Drive 10d nails into the truss at the inside end of the slotted holes (inside end is towards the centre of the truss) and clinch on the back side. Do not seat these nails into the truss–allow room under the nail head for movement of the truss with respect to the wall.

Optional TC Installation:

- Bend one flange up 90°. Drive specified nails into the top and face of the top plates or install Titen® screws into the top and face of masonry wall. See optional load tables and installation details.

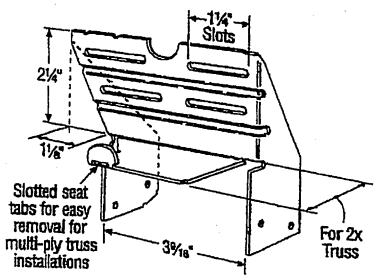

TC24
U.S. Patent 4,932,173

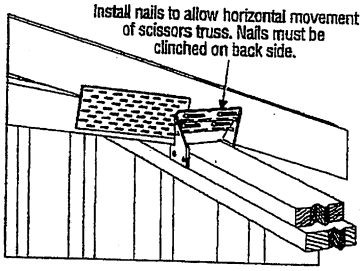

Typical TC24 Installation

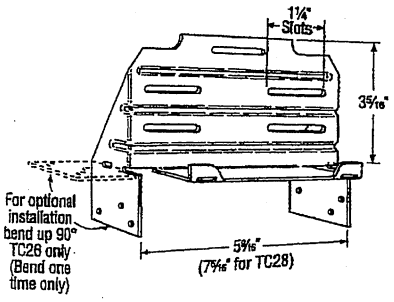

TC26
(TC28 Similiar)

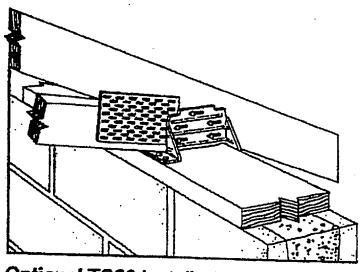

Optional TC26 Installation for Grouted Concrete Block using a Wood Nailer
(8", 10", 12" Wall Installation Similar)

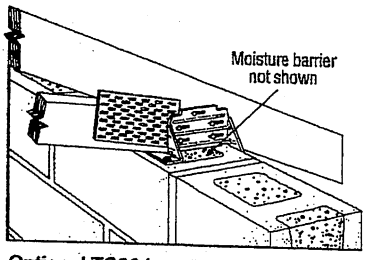

Optional TC26 Installation for Grouted Concrete Block using Titen Screws

Model No.	Fasteners		Factored Resistance	
	Truss	Wall Plates	D.Fir-L	S-P-F
			Uplift (K_D=1.15)	Uplift (K_D=1.15)
			lb.	lb.
TC24	(4) 10d	(4) 10d	605	430
TC26	(5) 10d	(6) 10d	1015	720
TC28	(5) 10d	(6) 10d	1015	720

Optional TC Installation Table

Model No.	Fasteners		Factored Resistance	
	Truss	Wall Plates	D.Fir-L	S-P-F
			Uplift (K_D=1.15)	Uplift (K_D=1.15)
			lb.	lb.
TC26	(5) 10d	(6) 10d x 1½"	810	660
	(5) 10d	(6) 10d	930	660

1. Factored resistances have been increased 15% for earthquake or wind loading; no further increase allowed; reduce where other loads govern.
2. Grout strength is 15 MPa minimum.
3. Optional TC26 installation with 10d nails requires minimum 3" top plate thickness.
4. TC26 fastened to grouted concrete block with (6) – ⅜" x 2¼" Titen screws has a factored uplift resistance of 275 lb.

LICENSED PROFESSIONAL ENGINEER
04/01/2020
B. D. BUNTING
PROVINCE OF ONTARIO

LIMIT STATES DESIGN

This technical bulletin is effective until June 30, 2022, and reflects information available as of April 1, 2020. This information is updated periodically and should not be relied upon after June 30, 2022. Contact Simpson Strong-Tie for current information and limited warranty or see strongtie.com.

© 2020 Simpson Strong-Tie Company Inc.

T-SPECTC20 3/20 exp. 6/22

(800) 999-5099
strongtie.com

REVIEWED

HTU

SIMPSON Strong-Tie®

Face-Mount Truss Hanger (cont.)

These products are approved for installation with the Strong-Drive® SD Connector screw. See pp. 32–34 for more information.

Alternate Installation for (2) 2x4 and (2) 2x6 Headers

Model No.	Min. Heel Height (in.)	Minimum Header Size	Fasteners: Header	Fasteners: Joist	Factored Resistance D.Fir-L Uplift (K_D = 1.15) lb. / kN	D.Fir-L Normal (K_D = 1.00) lb. / kN	S-P-F Uplift (K_D = 1.15) lb. / kN	S-P-F Normal (K_D = 1.00) lb. / kN
HTU26 (Min.)	3⅞	(2) 2x4	(10) 16d	(14) 10d x 1½"	1740	3340	1235	2370
					7.74	14.86	5.49	10.54
HTU26 (Max.)	5½	(2) 2x4	(10) 16d	(20) 10d x 1½"	2470	4015	1755	2850
					10.99	17.86	7.81	12.68
HTU28 (Max.)	3⅞	(2) 2x6	(20) 16d	(26) 10d x 1½"	4150	6395	2945	4540
					18.46	28.45	13.10	20.19
HTU210 (Max.)	7¼	(2) 2x6	(20) 16d	(32) 10d x 1½"	4150	6395	2945	4540
					18.46	28.45	13.10	20.19

See table footnotes on p. 260.

LICENSED PROFESSIONAL ENGINEER 5/29/19 B. D. BUNTING PROVINCE OF ONTARIO

Hanger Options

See Hanger Options information on pp. 125–127.

Skewed Seat

- Skewable up to 67½°
- Available in single and 2-ply size
- No bevel cut required

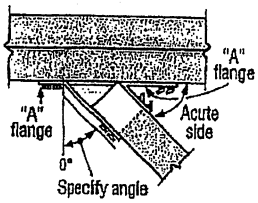

Top View HTU Hanger Skewed Right < 51°

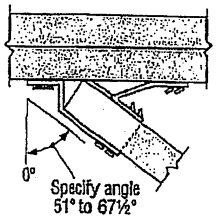

Top View HTU Hanger Skewed Right ≥ 51°

Factored Resistances for Skewed HTU Hangers

Model No.	Skew Angle (Degrees)	Fasteners: Header	Fasteners: Joist	Factored Resistance D.Fir-L Uplift (KD=1.15) lbs / kN	D.Fir-L Normal (KD=1.00) lbs / kN	S-P-F Uplift (KD=1.15) lbs / kN	S-P-F Normal (KD=1.00) lbs / kN
HTU26	< 51	(20) 16d	(14) 10d x 1½"	1835	4110	1300	2905
				8.16	18.28	5.78	12.92
	51–67½	(20) 16d	(12) 10d x 1½"	1350	3620	955	2560
				6.01	16.10	4.25	11.39
HTU28	< 51	(26) 16d	(20) 10d x 1½"	2810	4270	1985	3030
				12.50	18.99	8.83	13.48
	51–67½	(26) 16d	(17) 10d x 1½"	2075	3930	1465	2780
				9.23	17.48	6.52	12.37
HTU210	< 51	(32) 16d	(26) 10d x 1½"	3785	4430	2675	3135
				16.84	19.71	11.90	13.95
	51–67½	(32) 16d	(22) 10d x 1½"	2795	4240	1980	3000
				12.43	18.86	8.81	13.35
HTU26-2	< 51	(20) 16d	(14) 10d	2140	3715	1515	2625
				9.52	16.53	6.74	11.68
	51–67½	(20) 16d	(12) 10d	1610	3920	1140	2785
				7.16	17.44	5.07	12.39
HTU28-2	< 51	(26) 16d	(20) 10d	3960	5425	2815	3855
				17.62	24.13	12.52	17.15
	51–67½	(26) 16d	(17) 10d	2385	5425	1695	3855
				10.61	24.13	7.54	17.15
HTU210-2	< 51	(32) 16d	(26) 10d	5025	6890	3570	4890
				22.35	30.65	15.88	21.75
	51–67½	(36) 16d	(22) 10d	3145	6680	2225	4745
				13.99	29.72	9.90	21.10

1. Factored uplift resistances have been increased 15% for wind or earthquake loading; no further increase is allowed.
2. Reduced heel heights are not permitted for skewed HTU's.
3. Nails: 16d = 0.162" dia. x 3½" long, 10d x 1½" = 0.148" dia. x 1½" long, 10d = 0.148" dia. x 3" long. See pp. 27–28 for other nail sizes and information.

C-C-CAN2018 ©2017 SIMPSON STRONG-TIE COMPANY INC.

REVIEWED

ONTARIO WOOD TRUSS
FABRICATORS ASSOCIATION

TECH-NOTES

TN 15-001
Piggyback Bracing

Overview:

Where piggybacks are connected overtop of base trusses, 2x4 purlins must be first added to the flat portion of the base truss at a spacing no more than 24" o/c. These purlins not only provide support for the piggyback trusses above, but are required to laterally support the top chord of the base truss which will not have the sheathing directly connected to the flat portion of the base truss. This ensures the top chord, most often in compression, will not buckle laterally.

Further, the purlins in the plane of the flat portion require diagonal bracing to prevent lateral displacement of the purlins themselves where under certain conditions, the trusses may in fact all buckle in the same direction if this additional bracing is not added in the plane of the purlins.

Detail:

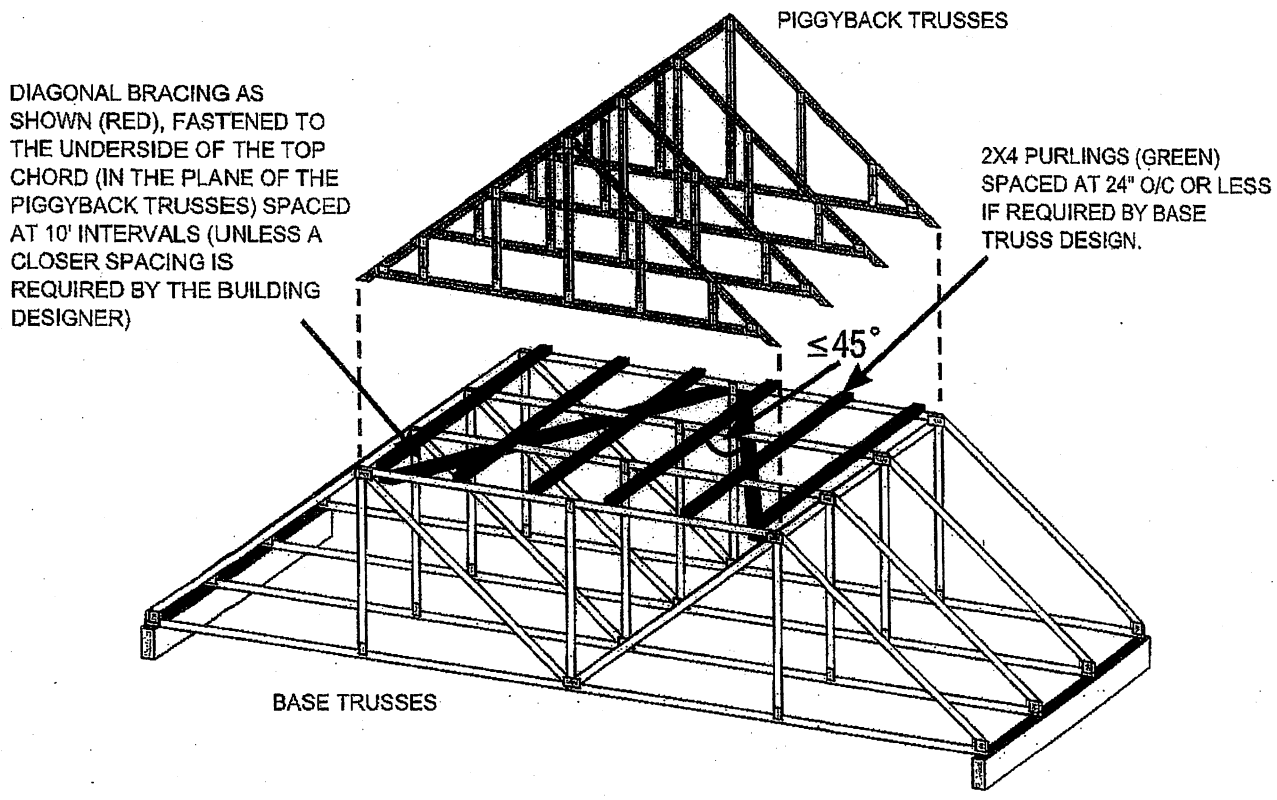

NOTE: THE SLOPED PORTION OF THE TOP CHORD OF THE BASE TRUSS AND PIGGYBACK TRUSS IN THIS SKETCH IS ASSUMED TO BE SHEATHED IN ACCORDANCE WITH THE OBC.

SKETCH FROM BCSI-CANADA 2013

Disclaimer:

OWTFA Tech Notes are intended to provide guidance to the design community both within the membership as well as to third party designers who might benefit from the information. The details have been developed by the OWTFA technical committee and although there may be professional engineers involved in development, the information contained in the tech-note are not intended to be used without having a professional engineer review the information for a specific application. The OWTFA takes no responsibility with respect to the information provided but has developed this tech-note to offer guidance where it is not currently readily available.

REVIEWED

HRS/HST/ST/PS/LSTA/LSTI/MST/MSTA/MSTC/MSTI

SIMPSON Strong-Tie®

Strap Ties

Straps are designed to transfer tension loads in a wide variety of applications.

HRS — Heavy strap designed for installation on the edge of 2x members. The HRS416Z installs with Strong-Drive® SDS Heavy-Duty Connector screws.

LSTA and MSTA — Designed for use on the edge of 2x members, with a nailing pattern that reduces the potential for splitting.

LSTI and MSTI — Light and medium straps that are suitable where pneumatic-nailing is necessary through diaphragm decking and wood chord open-web trusses.

MST — High-capacity strap that can be installed with either nails or bolts. Suitable for double 2x member connections or greater.

MSTC — High-capacity strap that utilizes a staggered nail pattern to help minimize wood splitting. Nail slots have been countersunk to provide a lower nail head profile.

Finish: Galvanized. Some products are available in stainless steel, ZMAX® coating or black powder coat (add PC to sku); contact Simpson Strong-Tie. See Corrosion Information, pp. 18–20.

Installation: Use all specified fasteners; see General Notes

Options: Special sizes can be made to order; contact Simpson Strong-Tie for longer lengths

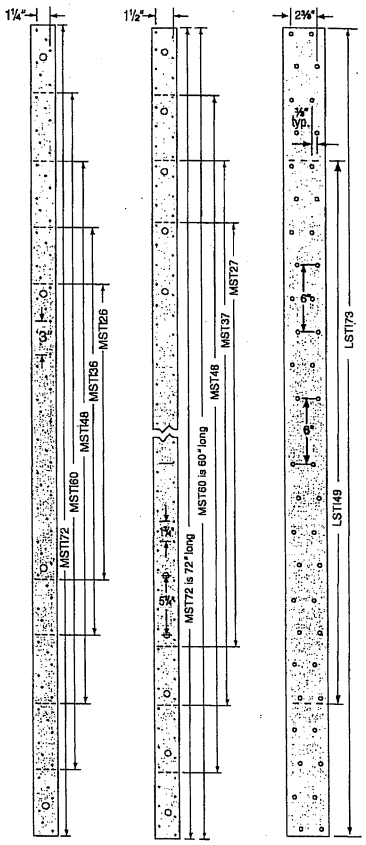

MSTI MST LSTI

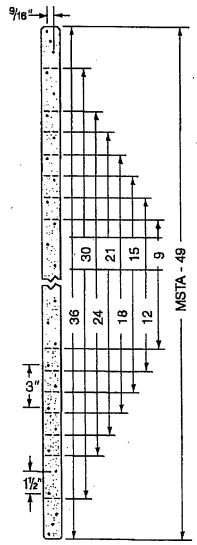

LSTA and MSTA
(Pilot holes not shown)

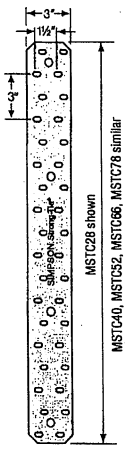

MSTC

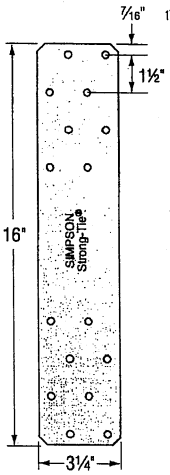

HRS416Z

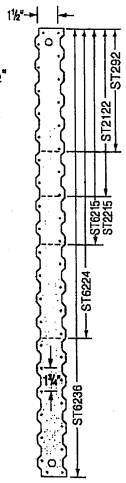

ST

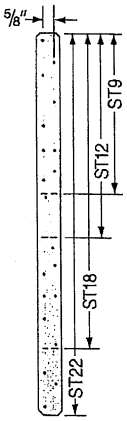

ST9, ST12, ST18, ST22

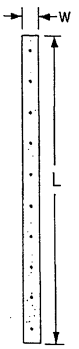

ST2115

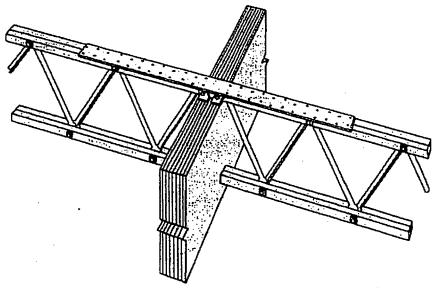

Typical LSTI Installation

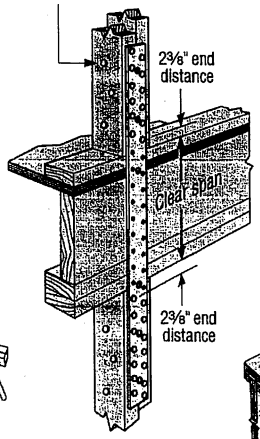

Floor-to-Floor Tie Installation Showing a Clear Span

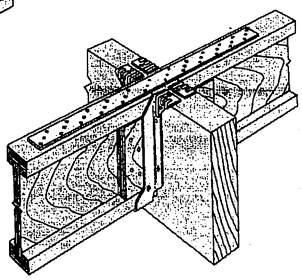

Typical MSTI Installation
(MIT hanger shown)
LSTI similar

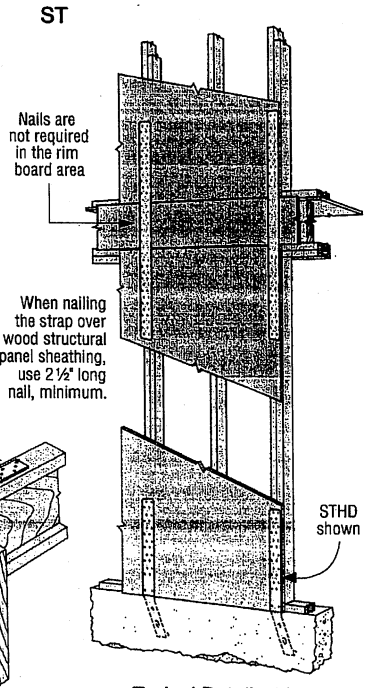

Typical Detail with Strap Installed over Wood Structural Panel Sheathing

C-C-CAN2020 ©2020 SIMPSON STRONG-TIE COMPANY INC.

REVIEWED

HRS/HST/ST/PS/LSTA/LSTI/MST/MSTA/MSTC/MSTI

SIMPSON Strong-Tie®

Strap Ties (cont.)

These products are available with additional corrosion protection. For more information, see p. 20.

SD Many of these products are approved for installation with Strong-Drive® SD Connector screws. See pp. 366–370 for more Information.

Model No.	Ga.	Dimensions (in.) W	Dimensions (in.) L	Fasteners (Total)	Factored Tensile Resistance D.Fir–L (K_D = 1.00) lb. / kN	D.Fir–L (K_D = 1.15) lb. / kN	S-P-F (K_D = 1.00) lb. / kN	S-P-F (K_D = 1.15) lb. / kN
LSTA9	20	1¼	9	(6) 10d	600 / 2.67	690 / 3.07	555 / 2.47	635 / 2.82
LSTA12	20	1¼	12	(8) 10d	800 / 3.56	920 / 4.09	735 / 3.27	845 / 3.76
LSTA15	20	1¼	15	(10) 10d	1000 / 4.45	1150 / 5.12	920 / 4.09	1060 / 4.72
LSTA18	20	1¼	18	(12) 10d	1200 / 5.34	1380 / 6.14	1105 / 4.92	1270 / 5.65
LSTA21	20	1¼	21	(14) 10d	1400 / 6.23	1610 / 7.16	1290 / 5.74	1485 / 6.61
LSTA24	20	1¼	24	(16) 10d	1600 / 7.12	1840 / 8.19	1475 / 6.56	1695 / 7.54
ST292	20	2 1/16	9 5/16	(8) 8d	585 / 2.60	675 / 3.00	535 / 2.38	615 / 2.74
ST2122	20	2 1/16	12 13/16	(12) 8d	940 / 4.18	1085 / 4.83	865 / 3.85	995 / 4.43
ST2115	20	¾	16 5/16	(8) 8d	670 / 2.98	770 / 3.43	615 / 2.74	710 / 3.16
ST2215	20	2 1/16	16 5/16	(16) 8d	1335 / 5.94	1540 / 6.85	1235 / 5.49	1420 / 6.32
LSTA30	18	1¼	30	(20) 10d	2235 / 9.94	2465 / 10.97	2075 / 9.23	2385 / 10.61
LSTA36	18	1¼	36	(24) 10d	2465 / 10.97	2465 / 10.97	2465 / 10.97	2465 / 10.97
LSTI49	18	3¾	49	(32) 10d x 1½"	3115 / 13.86	3580 / 15.93	2852 / 12.69	3280 / 14.59
LSTI73	18	3¾	73	(48) 10d x 1½"	4670 / 20.77	5370 / 23.89	4280 / 19.04	4920 / 21.89
MSTA9	18	1¼	9	(6) 10d	670 / 2.98	770 / 3.43	625 / 2.78	715 / 3.18
SS MSTA12	18	1¼	12	(8) 10d	895 / 3.98	1030 / 4.58	830 / 3.69	955 / 4.25
MSTA15	18	1¼	15	(10) 10d	1120 / 4.98	1285 / 5.72	1040 / 4.63	1195 / 5.32
SS MSTA18	18	1¼	18	(12) 10d	1340 / 5.96	1545 / 6.87	1245 / 5.54	1430 / 6.36
MSTA21	18	1¼	21	(14) 10d	1565 / 6.96	1800 / 8.01	1455 / 6.47	1670 / 7.43
SS MSTA24	18	1¼	24	(16) 10d	1790 / 7.96	2060 / 9.16	1660 / 7.38	1910 / 8.50
MSTA30	16	1¼	30	(20) 10d	2470 / 10.99	2840 / 12.63	2260 / 10.05	2595 / 11.54
SS MSTA36	16	1¼	36	(24) 10d	2965 / 13.19	3070 / 13.66	2710 / 12.06	3070 / 13.66
MSTA49	16	1¼	49	(28) 8d	2725 / 12.12	2725 / 12.12	2545 / 11.32	2725 / 12.12
ST6215	16	2 1/16	16 5/16	(16) 8d	1405 / 6.25	1615 / 7.18	1300 / 5.78	1500 / 6.67
ST6224	16	2 1/16	23 5/16	(24) 8d	2305 / 10.25	2650 / 11.79	2155 / 9.59	2475 / 11.01
ST9	16	1¼	9	(6) 8d	525 / 2.34	605 / 2.69	490 / 2.18	560 / 2.49
ST12	16	1¼	11⅝	(8) 8d	700 / 3.11	805 / 3.58	650 / 2.89	750 / 3.34
ST18	16	1¼	17¾	(12) 8d	1050 / 4.67	1210 / 5.38	975 / 4.34	1125 / 5.00
ST22	16	1¼	21⅝	(18) 8d	1580 / 7.03	1790 / 7.96	1465 / 6.52	1685 / 7.50

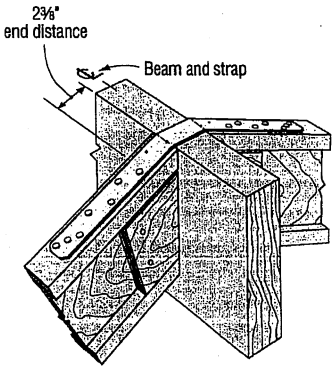

Typical LSTA Installation
(hanger not shown)
Bend strap one time only

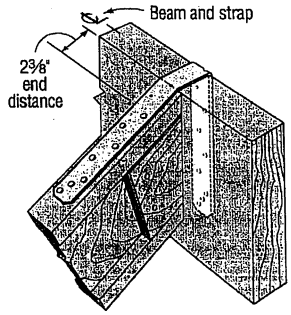

Typical LSTA Installation
(hanger not shown)
Bend strap one time only

1. Factored resistances have been increased 15% for earthquake or wind loading with no further increase allowed.
2. Use half of the nails in each member being connected to achieve the listed resistances.
3. **Nails:** 10d = 0.148" dia. x 3" long, 10d x 1½" = 0.148" dia. x 1½" long, 8d = 0.131" dia. x 2½" long. See pp. 22–23 for other nail sizes and information.

C-C-CAN2020 © 2020 SIMPSON STRONG-TIE COMPANY INC.

REVIEWED

HRS/HST/ST/PS/LSTA/LSTI/MST/MSTA/MSTC/MSTI

Strap Ties (cont.)

These products are available with additional corrosion protection. For more information, see p. 20.

SD Many of these products are approved for installation with Strong-Drive® SD Connector screws. See pp. 366–370 for more information.

Model No.	Ga.	Dimensions (in.) W	Dimensions (in.) L	Fasteners (Total)	Factored Tensile Resistance D.Fir-L (K_D = 1.00) lb. / kN	D.Fir-L (K_D = 1.15) lb. / kN	S-P-F (K_D = 1.00) lb. / kN	S-P-F (K_D = 1.15) lb. / kN
MSTC28	16	3	28¼	(32) 10d	3955	4545	3615	4155
					17.59	20.22	16.08	18.48
MSTC40		3	40¼	(48) 10d	5930	6820	5420	6235
					26.38	30.34	24.11	27.74
MSTC52		3	52¼	(54) 10d	6670	6940	6100	6940
					29.67	30.87	27.14	30.87
MSTC66	14	3	65¾	(66) 10d	8515	8565	7455	8565
					37.88	38.10	33.16	38.10
MSTC78		3	77¾	(66) 10d	8515	8565	7455	8565
					37.88	38.10	33.16	38.10
ST6236		2 1/16	33 13/16	(36) 8d	3735	4295	3270	3760
					16.61	19.11	14.55	16.73
MSTI26	12	2 1/16	26	(22) 10d x 1½"	2825	3250	2475	2850
					12.57	14.46	11.01	12.68
MSTI36		2 1/16	36	(32) 10d x 1½"	4110	4725	3600	4140
					18.28	21.02	16.01	18.42
MSTI48		2 1/16	48	(44) 10d x 1½"	5650	6500	4955	5695
					25.13	28.91	22.04	25.33
MSTI60		2 1/16	60	(56) 10d x 1½"	7195	7360	6305	7250
					32.01	32.74	28.05	32.25
MSTI72		2 1/16	72	(68) 10d x 1½"	7360	7360	7240	7360
					32.74	32.74	32.21	32.74
MST27		2 1/16	27	(26) 8d	2685	3090	2355	2710
					11.94	13.75	10.48	12.06
MST37		2 1/16	37½	(38) 8d	3930	4515	3440	3960
					17.48	20.08	15.30	17.62
MST48		2 1/16	48	(50) 8d	5170	5945	4530	5210
					23.00	26.45	20.15	23.18
HRS416Z		3¼	16	(16) ¼" x 1½" SDS	2400	2760	2120	2440
					10.68	12.28	9.43	10.85
MST60	10	2 1/16	60	(64) 8d	6620	7610	5800	6670
					29.45	33.85	25.80	29.67
MST72		2 1/16	72	(78) 8d	8065	9135	7065	8125
					35.88	40.64	31.43	36.14

1. Factored resistances have been increased 15% for earthquake or wind loading with no further increase allowed.
2. Use half of the nails in each member being connected to achieve the listed resistances.
3. **Nails:** 10d = 0.148" dia. x 3" long, 10d x 1½" = 0.148" dia. x 1½" long, 8d = 0.131" dia. x 2½" long. See pp. 22–23 for other nail sizes and information.

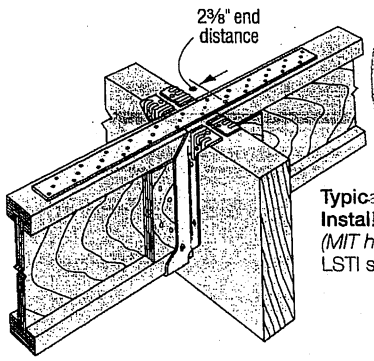

Typical MSTI Installation
(MIT hanger shown)
LSTI similar

LICENSED PROFESSIONAL ENGINEER
Jan. 5, 2021
G. V. LUBARSKY
100044463
PROVINCE OF ONTARIO

C-C-CAN2020 © 2020 SIMPSON STRONG-TIE COMPANY INC.

Straps and Ties

REVIEWED

Symbols

PLATE LOCATION AND ORIENTATION

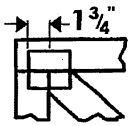

Center plate on joint unless x, y offsets are indicated. Dimensions are in ft-in-sixteenths or mm. Apply plates to both sides of truss and fully embed teeth.

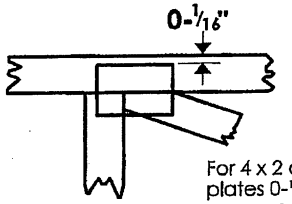

For 4 x 2 orientation, locate plates 0-1/16" from outside edge of truss.

This symbol indicates the required direction of slots in connector plates.

*Plate location details available in MiTek software or upon request.

PLATE SIZE

4 x 4

The first dimension is the plate width measured perpendicular to slots. Second dimension is the length parallel to slots.

LATERAL BRACING LOCATION

Indicated by symbol shown and/or by text in the bracing section of the output. Use T, I or Eliminator bracing if indicated.

BEARING

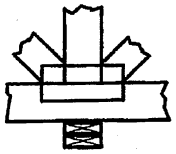

Indicates location where bearings (supports) occur. Icons vary but reaction section indicates joint number where bearings occur.

Industry Standards:

TPIC: Truss Design Procedures and Specifications for Light Metal Plate Connected Wood Trusses

DSB-89: Design Standard for Bracing.

BCSI: Building Component Safety Information, Guide to Good Practice for Handling, Installing & Bracing of Metal Plate Connected Wood Trusses.

Numbering System

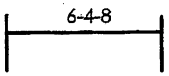

dimensions shown in ft-in-sixteenths or mm (Drawings not to scale)

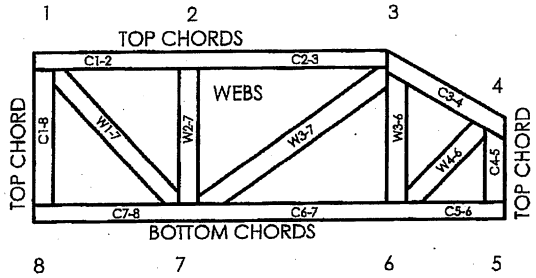

JOINTS ARE GENERALLY NUMBERED/LETTERED CLOCKWISE AROUND THE TRUSS STARTING AT THE JOINT FARTHEST TO THE LEFT.

CHORDS AND WEBS ARE IDENTIFIED BY END JOINT NUMBERS/LETTERS.

PRODUCT CODE APPROVALS

CCMC Reports:

11996-L, 10319-L, 13270-L, 12691-R

© 2007 MiTek® All Rights Reserved

MiTek®

POWER TO PERFORM.™

MiTek Engineering Reference Sheet: MII-7473C rev. 10-'08

General Safety Notes

Failure to Follow Could Cause Property Damage or Personal Injury

1. Additional stability bracing for truss system, e.g. diagonal or X-bracing, is always required. See BCSI.
2. Truss bracing must be designed by an engineer. For wide truss spacing, individual lateral braces themselves may require bracing, or alternative T, I, or Eliminator bracing should be considered.
3. Never exceed the design loading shown and never stack materials on inadequately braced trusses.
4. Provide copies of this truss design to the building designer, erection supervisor, property owner and all other interested parties.
5. Cut members to bear tightly against each other.
6. Place plates on each face of truss at each joint and embed fully. Knots and wane at joint locations are regulated by TPIC.
7. Design assumes trusses will be suitably protected from the environment in accord with TPIC.
8. Unless otherwise noted, moisture content of lumber shall not exceed 19% at time of fabrication.
9. Unless expressly noted, this design is not applicable for use with fire retardant, preservative treated, or green lumber.
10. Camber is a non-structural consideration and is the responsibility of truss fabricator. General practice is to camber for dead load deflection.
11. Plate type, size, orientation and location dimensions indicated are minimum plating requirements.
12. Lumber used shall be of the species and size, and in all respects, equal to or better than that specified.
13. Top chords must be sheathed or purlins provided at spacing indicated on design.
14. Bottom chords require lateral bracing at 10 ft. spacing, or less, if no ceiling is installed, unless otherwise noted.
15. Connections not shown are the responsibility of others.
16. Do not cut or alter truss member or plate without prior approval of an engineer.
17. Install and load vertically unless indicated otherwise.
18. Use of green or treated lumber may pose unacceptable environmental, health or performance risks. Consult with project engineer before use.
19. Review all portions of this design (front, back, words and pictures) before use. Reviewing pictures alone is not sufficient.
20. Design assumes manufacture in accordance with TPIC Quality Criteria.

REVIEWED

Alves Engineering Services Inc.
5208 Easton road
Burlington, Ontario L7L 6N6
(289) 259 5455

LICENSED PROFESSIONAL ENGINEER
06/11/15
H.J.G. ALVES
PROVINCE OF ONTARIO

RESPONSABILITIES

1-Alves Engineering Services Inc. is responsible for the design of trusses as individual components

2-It is the responsibility of others to ascertain that the design loads utilized on this drawing meet or exceed the actual dead load imposed by the structure and the live load imposed by the local building code or the authorities having jurisdictions.

3- All dimensions are to be verified by owner, contractor, architect or other authority before manufacture.

4- Alves Engineering Services Inc. bears no responsibility for the erection of the trusses. Persons erecting trusses are cautioned to seek professional advice regarding temporary and permanent bracing system. Bracing shown on Alves Engineering Services Inc. drawings is specified for the truss as a single component and forms an integral part of the truss design, but is not meant to represent the only required bracing for that truss when trusses are installed in a series of trusses forming a roof truss system.

5- It is the manufactures responsibility to ensure that the trusses are manufactured in conformance with Alves Engineering Services Inc. specifications outlined below.

SPECIFICATIONS

1-Truss components sealed by Alves Engineering Services Inc. conform to the relevant sections of the current Building Code of Ontario and Canada (part 4 or part 9) or the current Canadian code for Farm Buildings in accordance with the application specified on the sealed truss component drawing. All truss component design procedures must conform to the current design standard issued by the truss plate institute of Canada (TPIC). All lumber and nailing stresses to conform to the current CSA wood design standard identified on the current Building Code and TPIC.

2- Lumber is to be the sizes and grade specified on the truss drawing.

3- Moist content of lumber is not to exceed 19% in service unless otherwise specified.

4- Plates shall be applied to both faces of the each truss joint and shall be positioned as shown on the truss drawings

5- Lumber used on manufacture of trusses is not to be treated with chemicals unless otherwise specified on the truss drawings.

6- The top chord is assumed to be continuously laterally braced by the roof sheathing or purlins at intervals specified on the truss drawing but not exceeding 24" c/c for (part 9) and not exceeding 48" for (part 4 or farm design)

7- When rigid ceiling is not attached directly to the bottom chord, lateral bracing is required and it should not exceed more than 3m or 10' intervals.

8-Refer to Mitek sheet MII7473C REV.10-08 attached for information on symbols, numbering ⁺em and General Safety notes.

T-1800218 Feb 09, 2018

REVIEWED