It is the builder's complete responsibility to ensure that all plans submitted for approval fully comply with the Architectural Guidelines and all applicable regulations and requirements including zoning provisions and any provisions in the subdivision agreement. The Control Architect is not responsible in any way for examining or approving site (lotting) plans or working drawings with respect to any zoning or building code or permit matter or that any house can be properly built or located on its lot.

This is to certify that these plans comply with the applicable Architectural Design Guidelines approved by the Town of BRADFORD / WEST GWILLIMBURY.

10' GROUND

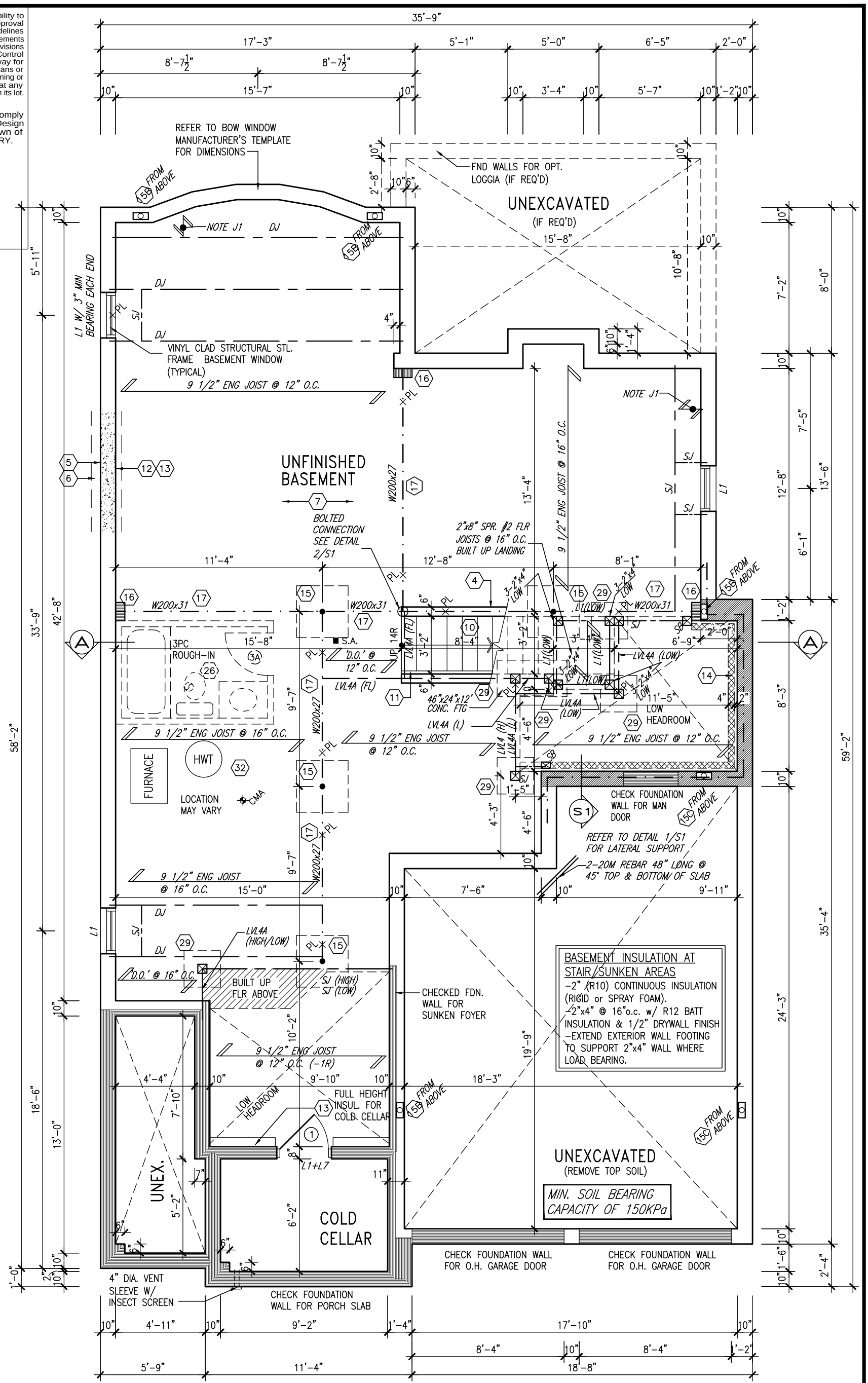

BASEMENT INSULATION AT STAIR/SUNKEN AREAS
-2" (R10) CONTINUOUS INSULATION (RIGID or SPRAY FOAM).
-2"x4" @ 16"o.c. w/ R12 BATT INSULATION & 1/2" DRYWALL FINISH
-EXTEND EXTERIOR WALL FOOTING TO SUPPORT 2"x4" WALL WHERE LOAD BEARING.

S. J. BOYD
90214198
LICENSED PROFESSIONAL ENGINEER
PROVINCE OF ONTARIO
APR 8, 2022

NOTE: FLOOR FRAMING INFO REFER TO SHOP DRAWINGS FOR ALL TRUSS-JOIST INFORMATION AND DETAILS. UNLESS OTHERWISE NOTED.

NOTE: ALL LVL'S SUPPORTING FLOOR LOADS ARE TO BE SPECIFIED BY FLOOR TRUSS MANUFACTURER.

NOTE: SPACE ALL FLOOR JOISTS @ 12" O.C. UNDER ALL CERAMIC TILE AREAS.

NOTE J1: PROVIDE SOLID BLOCKING @ 24" O.C. WHERE FLOOR JOISTS ARE PARALLEL TO FOUNDATION WALL (TYP.)

AREA CHART ON PAGE 11

BASEMENT PLAN 'A'

no.	description	date	by
9	.	.	.
8	.	.	.
7	.	.	.
6	REVISED AS PER ENG'S COMMENTS	APR 08-22	RC
5	REVISED AS PER FLOOR LAYOUTS	APR 05-22	RC
4	10' GROUND FLOOR	JLU 22-21	KL
3	ADDED OPT. 9' BASEMENT	JUL 22-21	KL
2	REVISED AS PER ENG'S COMMENTS	FEB 07-18	RC
1	ISSUED FOR CLIENT REVIEW	.	.

The undersigned has reviewed and takes responsibility for this design and has the qualifications and meets the requirements set out in the Ontario Building Code to be a Designer.

qualification information		
Wellington Jno-Baptiste (signature)	25591	BCIN
registration information		
VA3 Design Inc.	42658	

Contractor must verify all dimensions on the job and report any discrepancy to the Designer before proceeding with the work. All drawings and specifications are instruments of service and the property of the Designer which must be returned at the completion of the work. Drawings are not to be scaled.

VA3 DESIGN
255 Consumers Rd Suite 120
Toronto ON M2J 1R4
t 416.630.2255 f 416.630.4782
va3design.com

BAYVIEW WELLINGTON

S42-2
RIDEAU 2

project name	municipality	project no.
GREEN VALLEY EAST	BRADFORD, ONT.	16023

date			drawing no.
FEBRUARY,2017	BASEMENT PLAN ELEV. 'A'		1
drawn by: WT	checked by: RC	scale: 3/16" = 1'-0"	file name: 16023-S42-2-10GRND

RICHARD – H:\ARCHIVE\WORKING\2016\16023.BW\Units\42"\16023-S42-2-10GRND.dwg – Fri – Apr 8 2022 – 2:18 PM

All drawings specifications, related documents and design are the copyright property of VA3 DESIGN. Reproduction of this property in whole or in part is strictly prohibited without VA3 DESIGN's written permission.

It is the builder's complete responsibility to ensure that all plans submitted for approval fully comply with the Architectural Guidelines and all applicable regulations and requirements including zoning provisions and any provisions in the subdivision agreement. The Control Architect is not responsible in any way for examining or approving site (lotting) plans or working drawings with respect to any zoning or building code or permit matter or that any house can be properly built or located on its lot.

This is to certify that these plans comply with the applicable Architectural Design Guidelines approved by the Town of BRADFORD / WEST GWILLIMBURY.

10' GROUND

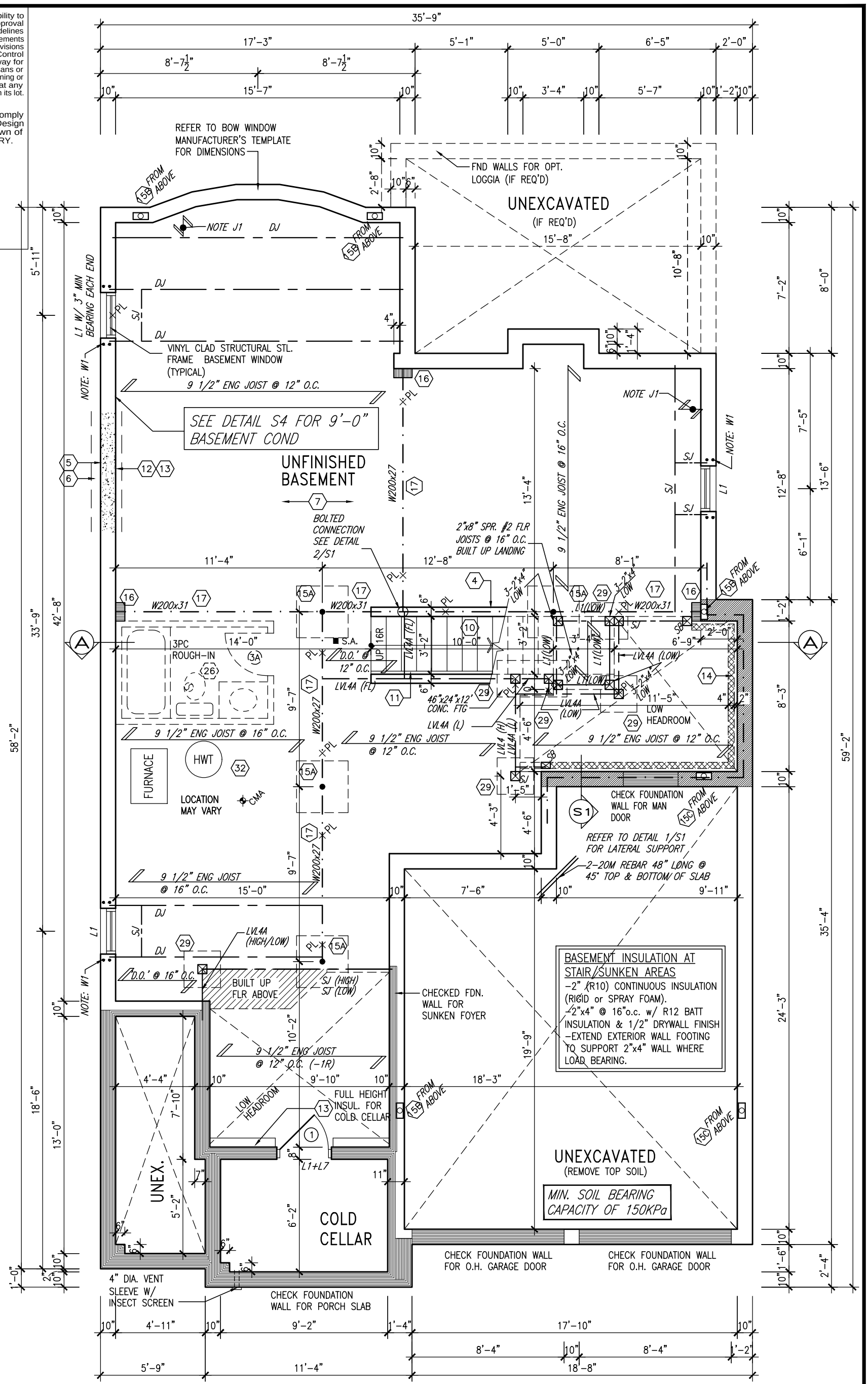

BASEMENT INSULATION AT STAIR/SUNKEN AREAS
-2" (R10) CONTINUOUS INSULATION (RIGID or SPRAY FOAM).
-2"x4" @ 16"o.c. w/ R12 BATT INSULATION & 1/2" DRYWALL FINISH
-EXTEND EXTERIOR WALL FOOTING TO SUPPORT 2"x4" WALL WHERE LOAD BEARING.

NOTE W1
PROVIDE 2-15M FULL HEIGHT VERTICAL REBARS EACH SIDE OF OPENING + 2-15M HORIZ. REBARS BELOW AND EXTEND 24" BEYOND OPENING
PROVIDE 3" CLEAR COVER FROM SOIL SIDE

NOTE: FLOOR FRAMING INFO REFER TO SHOP DRAWINGS FOR ALL TRUSS-JOIST INFORMATION AND DETAILS. UNLESS OTHERWISE NOTED.

NOTE: ALL LVL'S SUPPORTING FLOOR LOADS ARE TO BE SPECIFIED BY FLOOR TRUSS MANUFACTURER.

NOTE: SPACE ALL FLOOR JOISTS @ 12" O.C. UNDER ALL CERAMIC TILE AREAS.

NOTE J1: PROVIDE SOLID BLOCKING @ 24" O.C. WHERE FLOOR JOISTS ARE PARALLEL TO FOUNDATION WALL (TYP.)

LICENSED PROFESSIONAL ENGINEER S. J. BOYD 90214198 PROVINCE OF ONTARIO
APR 8, 2022

BASEMENT PLAN 'A'
(9'-0" BASEMENT)

no.	description	date	by
9	.	.	.
8	.	.	.
7	.	.	.
6	REVISED AS PER ENG'S COMMENTS	APR 08-22	RC
5	REVISED AS PER FLOOR LAYOUTS	APR 05-22	RC
4	10' GROUND FLOOR	JLU 22-21	KL
3	ADDED OPT. 9' BASEMENT	JUL 22-21	KL
2	REVISED AS PER ENG'S COMMENTS	FEB 07-18	RC
1	ISSUED FOR CLIENT REVIEW	.	.

The undersigned has reviewed and takes responsibility for this design and has the qualifications and meets the requirements set out in the Ontario Building Code to be a Designer.

qualification information		
Wellington Jno-Baptiste	signature	25591 BCIN
registration information		
VA3 Design Inc.		42658

Contractor must verify all dimensions on the job and report any discrepancy to the Designer before proceeding with the work. All drawings and specifications are instruments of service and the property of the Designer which must be returned at the completion of the work. Drawings are not to be scaled.

VA3 DESIGN
255 Consumers Rd Suite 120
Toronto ON M2J 1R4
t 416.630.2255 f 416.630.4782
va3design.com

BAYVIEW WELLINGTON

S42-2
RIDEAU 2

project name	municipality	project no.
GREEN VALLEY EAST	BRADFORD, ONT.	16023

date			drawing no.
FEBRUARY,2017	BASEMENT PLAN ELEV. 'A'		1A
drawn by: WT	checked by: RC	scale: 3/16" = 1'-0"	file name: 16023-S42-2-10GRND

RICHARD - H:\ARCHIVE\WORKING\2016\16023.BW\Units\42'\16023-S42-2-10GRND.dwg - Fri - Apr 8 2022 - 2:18 PM

All drawings specifications, related documents and design are the copyright property of VA3 DESIGN. Reproduction of this property in whole or in part is strictly prohibited without VA3 DESIGN's written permission.

It is the builder's complete responsibility to ensure that all plans submitted for approval fully comply with the Architectural Guidelines and all applicable regulations and requirements including zoning provisions and any provisions in the subdivision agreement. The Control Architect is not responsible in any way for examining or approving site (lotting) plans or working drawings with respect to any zoning or building code or permit matter or that any house can be properly built or located on its lot.

This is to certify that these plans comply with the applicable Architectural Design Guidelines approved by the Town of BRADFORD / WEST GWILLIMBURY.

GROUND

10'

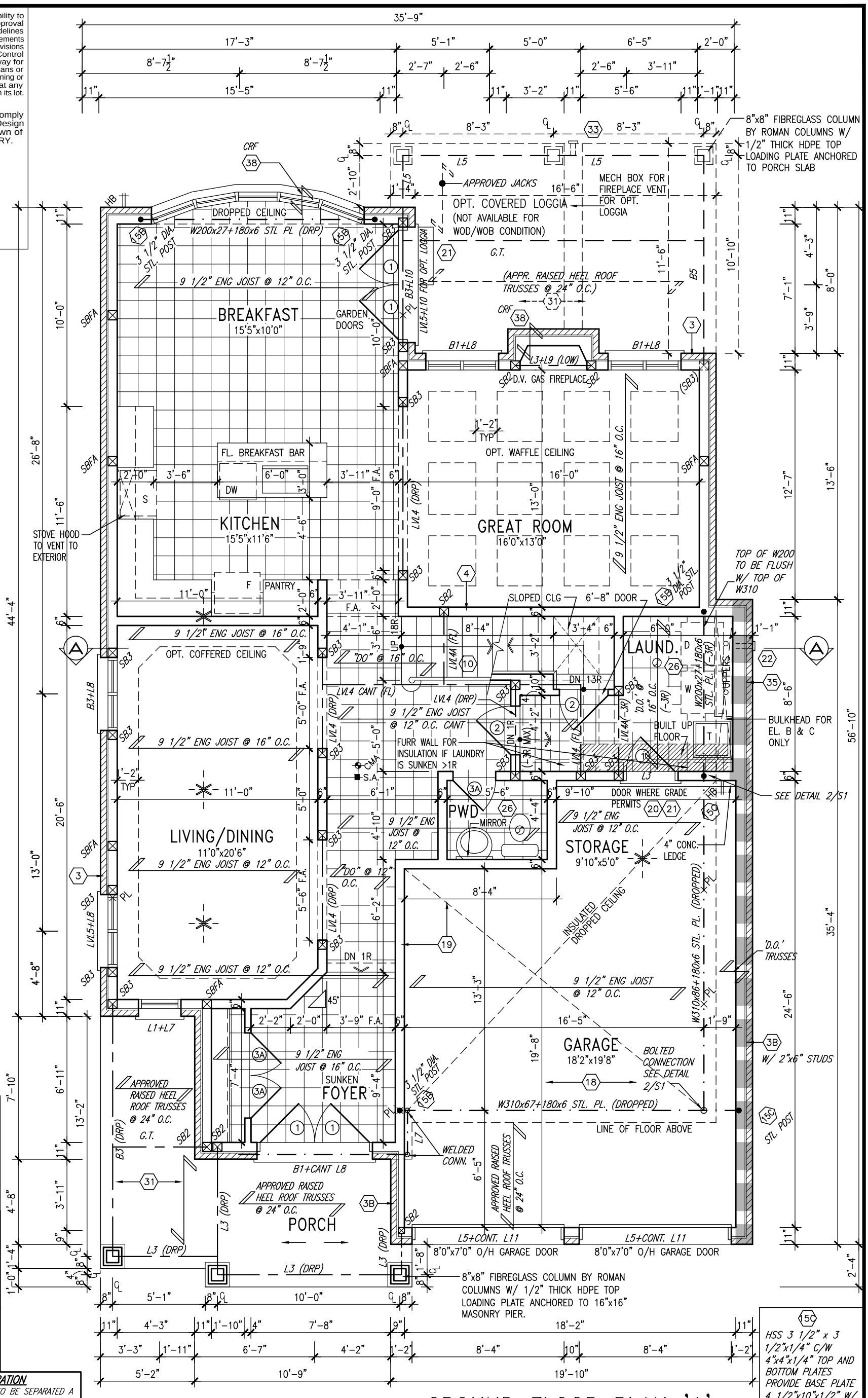

DOOR HEIGHTS	
CEILING HEIGHT	DOOR HEIGHT
11'0" or greater	8'0" (96")
10'0"	8'0" (96")
9'0"	6'8" (80")
8'0" or lower	6'8" (80")
CONTRACTOR TO CONFIRM HEIGHTS WITH BUILDER	

LICENSED PROFESSIONAL ENGINEER
S. J. BOYD
90214198
PROVINCE OF ONTARIO

APR 8, 2022

NOTE R1:
ONE PLY RUBBER MEMBRANE ADHERED TO EXT. TYPE 5/8" T&G PLYWOOD SHEATHING ON 2"x4" PURLINS LAID PERP. TO JOISTS SLOPED TO DRAIN, ON 2"x8" SPR. FLR. JOISTS @ 16" O.C. W/ PREFIN. ALUM. SOFFIT ON U/S

NOTE: SPACE ALL FLOOR JOISTS @ 12" O.C. UNDER ALL CERAMIC TILE AREAS.

NOTE: ALL LVL'S SUPPORTING FLOOR LOADS ARE TO BE SPECIFIED BY FLOOR TRUSS MANUFACTURER.

NOTE: FLOOR FRAMING INFO REFER TO SHOP DRAWINGS FOR ALL TRUSS-JOIST INFORMATION AND DETAILS. UNLESS OTHERWISE NOTED.

OUTDOOR AIR INTAKE SEPARATION
ALL OUTDOOR AIR INTAKE VENTS TO BE SEPARATED A MINIMUM DISTANCE FROM SOURCES OF CONTAMINATION PER OBC. DIV. B- TABLE 6.2.3.12.
- KITCHEN EXHAUST. 3.0m
- DRIVEWAY, PARKING SPACE, ROAD. 1.5m
- SOLID FUEL APPLIANCE EXHAUST 3.0m

KIT-EX-NOTE-2020.dwg

INDICATES FIRE RATED WALL ASSEMBLY

GROUND FLOOR PLAN 'A' (10'-0" GROUND)

15C
HSS 3 1/2" x 3 1/2"x1/4" C/W 4"x4"x1/4" TOP AND BOTTOM PLATES PROVIDE BASE PLATE 4 1/2"x10"x1/2" W/ (2) 1/2" DIA x12"x2" HOOK ANCHORS FIELD WELD COL TO BASE PLATE

no.	description	date	by
9	.	.	.
8	.	.	.
7	.	.	.
6	REVISED AS PER ENG'S COMMENTS	APR 08-22	RC
5	REVISED AS PER FLOOR LAYOUTS	APR 05-22	RC
4	10' GROUND FLOOR	JLU 22-21	KL
3	ADDED OPT. 9' BASEMENT	JUL 22-21	KL
2	REVISED AS PER ENG'S COMMENTS	FEB 07-18	RC
1	ISSUED FOR CLIENT REVIEW	.	.

The undersigned has reviewed and takes responsibility for this design and has the qualifications and meets the requirements set out in the Ontario Building Code to be a Designer.

qualification information
Wellington Jno-Baptiste — 25591
name — signature — BCIN
registration information
VA3 Design Inc. — 42658

Contractor must verify all dimensions on the job and report any discrepancy to the Designer before proceeding with the work. All drawings and specifications are instruments of service and the property of the Designer which must be returned at the completion of the work. Drawings are not to be scaled.

VA3 DESIGN
255 Consumers Rd Suite 120
Toronto ON M2J 1R4
t 416.630.2255 f 416.630.4782
va3design.com

BAYVIEW WELLINGTON

S42-2
RIDEAU 2

project name: GREEN VALLEY EAST
municipality: BRADFORD, ONT.
project no.: 16023
date: FEBRUARY,2017
GROUND FLOOR PLAN ELEV. 'A'
drawing no.: 2
drawn by: WT
checked by: RC
scale: 3/16" = 1'-0"
file name: 16023-S42-2-10GRND

RICHARD – H:\ARCHIVE\WORKING\2016\16023.BW\Units\42"\16023-S42-2-10GRND.dwg – Fri – Apr 8 2022 – 2:18 PM

All drawings specifications, related documents and design are the copyright property of VA3 DESIGN. Reproduction of this property in whole or in part is strictly prohibited without VA3 DESIGN's written permission.

It is the builder's complete responsibility to ensure that all plans submitted for approval fully comply with the Architectural Guidelines and all applicable regulations and requirements including zoning provisions and any provisions in the subdivision agreement. The Control Architect is not responsible in any way for examining or approving site (lotting) plans or working drawings with respect to any zoning or building code or permit matter or that any house can be properly built or located on its lot.

This is to certify that these plans comply with the applicable Architectural Design Guidelines approved by the Town of BRADFORD / WEST GWILLIMBURY.

10' GROUND

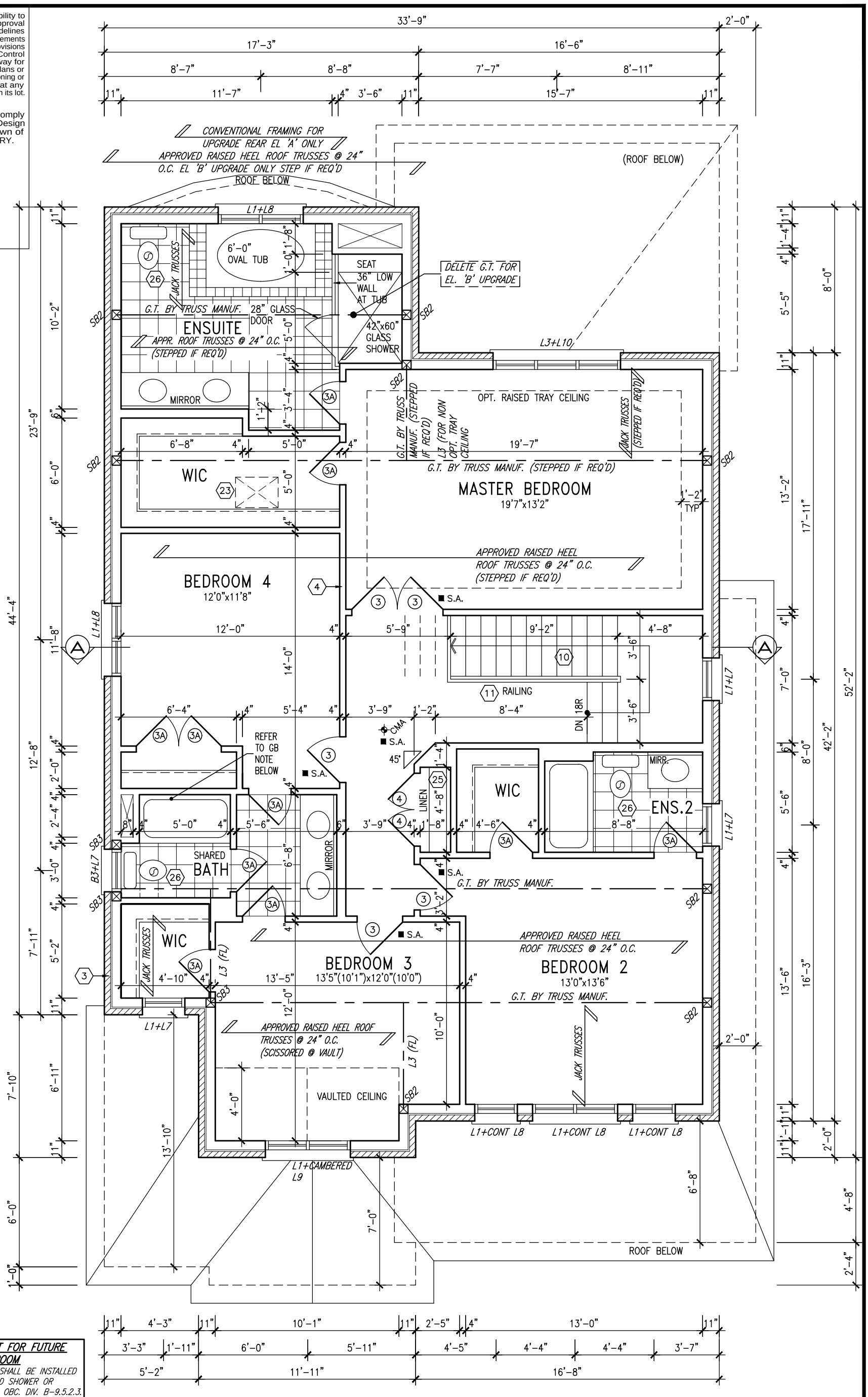

NOTE: ROOF FRAMING
ROOF TRUSS INFORMATION REFER TO ROOF TRUSS SHOP DRAWINGS FOR ALL ROOF FRAMING INFORMATION UNLESS OTHERWISE NOTED.

GRAB BAR NOTE:

STUD WALL REINFORCEMENT FOR FUTURE GRAB BARS IN MAIN BATHROOM

REINFORCEMENT OF STUD WALLS SHALL BE INSTALLED ADJACENT TO WATER CLOSETS AND SHOWER OR BATHTUB IN MAIN BATHROOM PER OBC. DIV. B-9.5.2.3. REFER TO FOLLOWING SECTIONS FOR THE FIXTURES LISTED. WATER CLOSET: 3.8.3.8.(3)(a) & 3.8.3.8.(3)(c). SHOWER 3.8.3.13.(2)(g). BATHTUB 3.8.3.13.(4)(e). FREE STANDING BATHTUB EXCLUDED. SEE DETAILS PROVIDED.

GB-NOTE-2020.dwg

LICENSED PROFESSIONAL ENGINEER S. J. BOYD 90214198 PROVINCE OF ONTARIO

APR 8, 2022

SECOND FLOOR PLAN 'A'

no.	description	date	by
9	.	.	.
8	.	.	.
7	.	.	.
6	REVISED AS PER ENG'S COMMENTS	APR 08-22	RC
5	REVISED AS PER FLOOR LAYOUTS	APR 05-22	RC
4	10' GROUND FLOOR	JLU 22-21	KL
3	ADDED OPT. 9' BASEMENT	JUL 22-21	KL
2	REVISED AS PER ENG'S COMMENTS	FEB 07-18	RC
1	ISSUED FOR CLIENT REVIEW	.	.

The undersigned has reviewed and takes responsibility for this design and has the qualifications and meets the requirements set out in the Ontario Building Code to be a Designer.

qualification information
Wellington Jno-Baptiste — 25591 BCIN
name — signature
registration information
VA3 Design Inc. — 42658

Contractor must verify all dimensions on the job and report any discrepancy to the Designer before proceeding with the work. All drawings and specifications are instruments of service and the property of the Designer which must be returned at the completion of the work. Drawings are not to be scaled.

VA3 DESIGN
255 Consumers Rd Suite 120
Toronto ON M2J 1R4
t 416.630.2255 f 416.630.4782
va3design.com

BAYVIEW WELLINGTON

S42-2
RIDEAU 2

project name: GREEN VALLEY EAST
municipality: BRADFORD, ONT.
project no.: 16023

date: FEBRUARY,2017
SECOND FLOOR PLAN ELEV. 'A'
drawing no.: 3

drawn by: WT | checked by: RC | scale: 3/16" = 1'-0" | file name: 16023-S42-2-10GRND

RICHARD – H:\ARCHIVE\WORKING\2016\16023.BW\Units\42"\16023-S42-2-10GRND.dwg – Fri – Apr 8 2022 – 2:18 PM

All drawings specifications, related documents and design are the copyright property of VA3 DESIGN. Reproduction of this property in whole or in part is strictly prohibited without VA3 DESIGN's written permission.

It is the builder's complete responsibility to ensure that all plans submitted for approval fully comply with the Architectural Guidelines and all applicable regulations and requirements including zoning provisions and any provisions in the subdivision agreement. The Control Architect is not responsible in any way for examining or approving site (lotting) plans or working drawings with respect to any zoning or building code or permit matter or that any house can be properly built or located on its lot.

This is to certify that these plans comply with the applicable Architectural Design Guidelines approved by the Town of BRADFORD / WEST GWILLIMBURY.

DOOR HEIGHTS	
CEILING HEIGHT	DOOR HEIGHT
11'0" or greater	8'0" (96")
10'0"	8'0" (96")
9'0"	6'8" (80")
8'0" or lower	6'8" (80")
CONTRACTOR TO CONFIRM HEIGHTS WITH BUILDER	

ROOF NOTE R1
2"x8" @ 16" O.C. P.T. W/ 2"x4" @ 12" O.C. DIAGONALLY CUT CROSS PURLINS W/ 5/8" EXTERIOR GRADE SHEATHING W/ SINGLE PLY ROOF MEMBRANE

NOTE: SPACE ALL FLOOR JOISTS @ 12" O.C. UNDER ALL CERAMIC TILE AREAS.

NOTE: ALL LVL'S SUPPORTING FLOOR LOADS ARE TO BE SPECIFIED BY FLOOR TRUSS MANUFACTURER.

NOTE: FLOOR FRAMING INFO REFER TO SHOP DRAWINGS FOR ALL TRUSS-JOIST INFORMATION AND DETAILS. UNLESS OTHERWISE NOTED.

OUTDOOR AIR INTAKE SEPARATION
ALL OUTDOOR AIR INTAKE VENTS TO BE SEPARATED A MINIMUM DISTANCE FROM SOURCES OF CONTAMINATION PER OBC. DIV. B- TABLE 6.2.3.12.
- KITCHEN EXHAUST. 3.0m
- DRIVEWAY, PARKING SPACE, ROAD. 1.5m
- SOLID FUEL APPLIANCE EXHAUST 3.0m

KIT-EX-NOTE-2020.dwg

NOTE J1: PROVIDE SOLID BLOCKING @ 24" O.C. WHERE FLOOR JOISTS ARE PARALLEL TO FOUNDATION WALL (TYP.)

NOTE:
REFER TO STANDARD PLAN FOR COMPLETE CONSTRUCTION NOTES.

10' GROUND

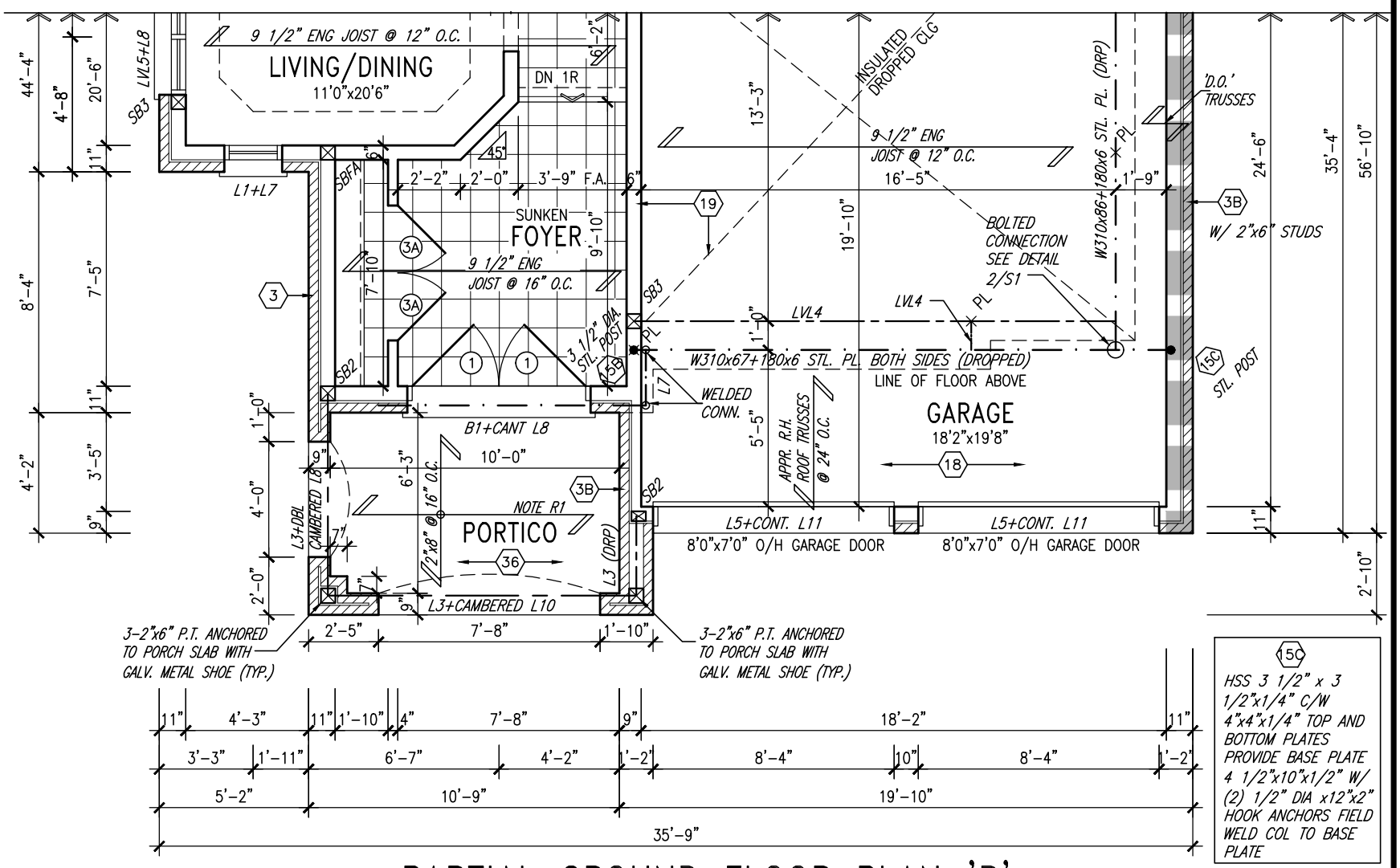

HSS 3 1/2" x 3 1/2"x1/4" C/W 4"x4"x1/4" TOP AND BOTTOM PLATES PROVIDE BASE PLATE 4 1/2"x10"x1/2" W/ (2) 1/2" DIA x12"x2" HOOK ANCHORS FIELD WELD COL TO BASE PLATE

PARTIAL GROUND FLOOR PLAN 'B'
(10'-0" GROUND)

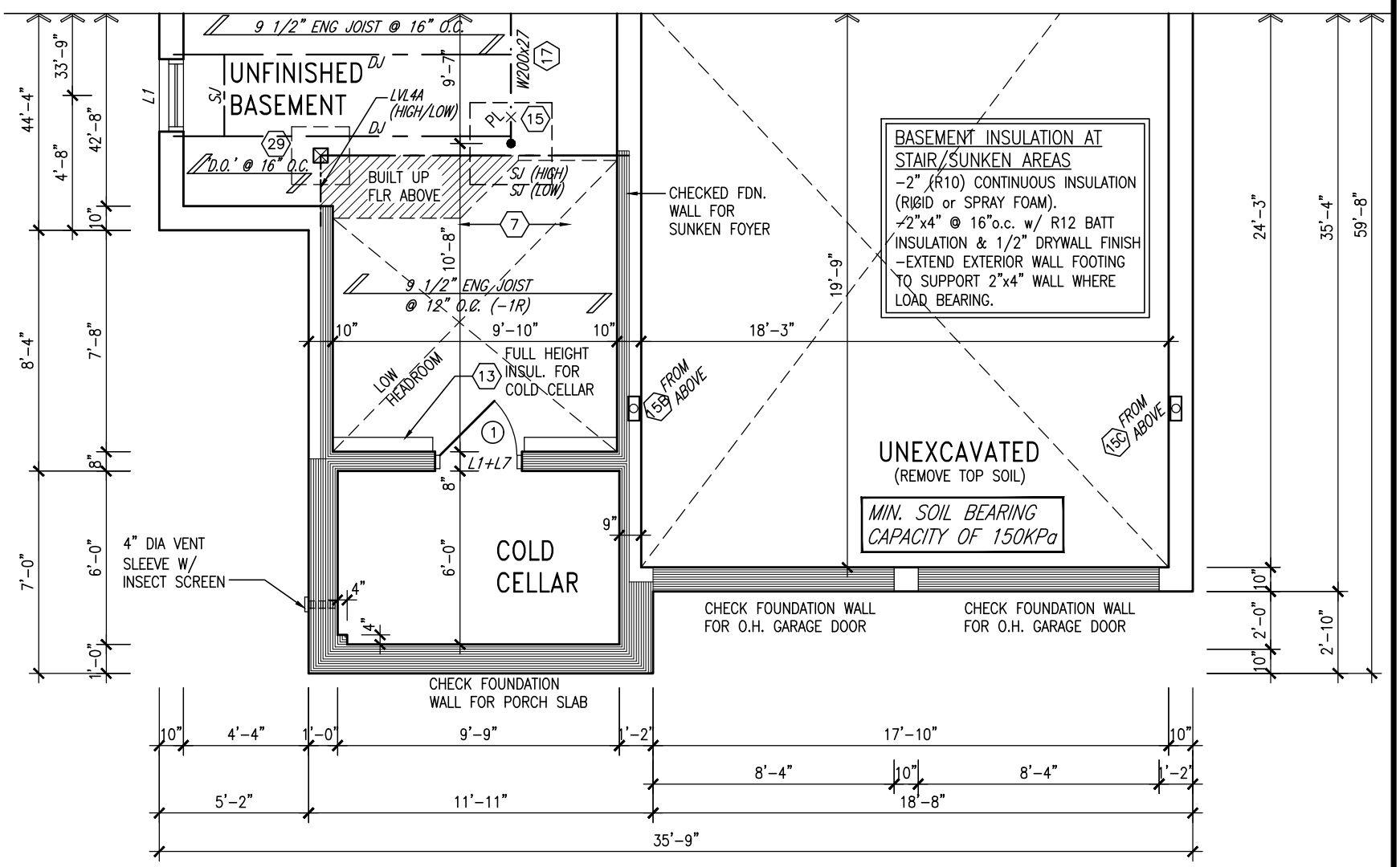

BASEMENT INSULATION AT STAIR/SUNKEN AREAS
-2" (R10) CONTINUOUS INSULATION (RIGID or SPRAY FOAM).
-2"x4" @ 16"o.c. w/ R12 BATT INSULATION & 1/2" DRYWALL FINISH
-EXTEND EXTERIOR WALL FOOTING TO SUPPORT 2"x4" WALL WHERE LOAD BEARING.

PARTIAL BASEMENT PLAN 'B'

LICENSED PROFESSIONAL ENGINEER
S. J. BOYD
90214198
PROVINCE OF ONTARIO
APR 8, 2022

no.	description	date	by
9	.	.	.
8	.	.	.
7	.	.	.
6	REVISED AS PER ENG'S COMMENTS	APR 08-22	RC
5	REVISED AS PER FLOOR LAYOUTS	APR 05-22	RC
4	10' GROUND FLOOR	JLU 22-21	KL
3	ADDED OPT. 9' BASEMENT	JUL 22-21	KL
2	REVISED AS PER ENG'S COMMENTS	FEB 07-18	RC
1	ISSUED FOR CLIENT REVIEW	.	.

The undersigned has reviewed and takes responsibility for this design and has the qualifications and meets the requirements set out in the Ontario Building Code to be a Designer.

qualification information		
name	signature	BCIN
Wellington Jno-Baptiste		25591
registration information		
VA3 Design Inc.		42658

Contractor must verify all dimensions on the job and report any discrepancy to the Designer before proceeding with the work. All drawings and specifications are instruments of service and the property of the Designer which must be returned at the completion of the work. Drawings are not to be scaled.

VA3 DESIGN
255 Consumers Rd Suite 120
Toronto ON M2J 1R4
t 416.630.2255 f 416.630.4782
va3design.com

BAYVIEW WELLINGTON

S42-2
RIDEAU 2

project name	municipality	project no.
GREEN VALLEY EAST	BRADFORD, ONT.	16023

date			drawing no.
FEBRUARY,2017	PART. PLANS ELEVATION 'B'		4
drawn by	checked by	scale	file name
WT	RC	3/16" = 1'-0"	16023-S42-2-10GRND

RICHARD - H:\ARCHIVE\WORKING\2016\16023.BW\Units\42'\16023-S42-2-10GRND.dwg - Fri - Apr 8 2022 - 2:18 PM

All drawings specifications, related documents and design are the copyright property of VA3 DESIGN. Reproduction of this property in whole or in part is strictly prohibited without VA3 DESIGN's written permission.

It is the builder's complete responsibility to ensure that all plans submitted for approval fully comply with the Architectural Guidelines and all applicable regulations and requirements including zoning provisions and any provisions in the subdivision agreement. The Control Architect is not responsible in any way for examining or approving site (lotting) plans or working drawings with respect to any zoning or building code or permit matter or that any house can be properly built or located on its lot.

This is to certify that these plans comply with the applicable Architectural Design Guidelines approved by the Town of BRADFORD / WEST GWILLIMBURY.

DOOR HEIGHTS	
CEILING HEIGHT	DOOR HEIGHT
11'0" or greater	8'0" (96")
10'0"	8'0" (96")
9'0"	6'8" (80")
8'0" or lower	6'8" (80")
CONTRACTOR TO CONFIRM HEIGHTS WITH BUILDER	

NOTE J1: PROVIDE SOLID BLOCKING @ 24" O.C. WHERE FLOOR JOISTS ARE PARALLEL TO FOUNDATION WALL (TYP.)

NOTE: SPACE ALL FLOOR JOISTS @ 12" O.C. UNDER ALL CERAMIC TILE AREAS.

NOTE: ALL LVL'S SUPPORTING FLOOR LOADS ARE TO BE SPECIFIED BY FLOOR TRUSS MANUFACTURER.

NOTE: FLOOR FRAMING INFO REFER TO SHOP DRAWINGS FOR ALL TRUSS-JOIST INFORMATION AND DETAILS. UNLESS OTHERWISE NOTED.

GRAB BAR NOTE:

STUD WALL REINFORCEMENT FOR FUTURE GRAB BARS IN MAIN BATHROOM

REINFORCEMENT OF STUD WALLS SHALL BE INSTALLED ADJACENT TO WATER CLOSETS AND SHOWER OR BATHTUB IN MAIN BATHROOM PER OBC. DIV. B-9.5.2.3. REFER TO FOLLOWING SECTIONS FOR THE FIXTURES LISTED. WATER CLOSET: 3.8.3.8.(3)(a) & 3.8.3.8.(3)(c). SHOWER 3.8.3.13.(2)(g). BATHTUB 3.8.3.13.(4)(e). FREE STANDING BATHTUB EXCLUDED. SEE DETAILS PROVIDED.

GB-NOTE-2020.dwg

NOTE: ROOF FRAMING
ROOF TRUSS INFORMATION REFER TO ROOF TRUSS SHOP DRAWINGS FOR ALL ROOF FRAMING INFORMATION UNLESS OTHERWISE NOTED.

NOTE:
REFER TO STANDARD PLAN FOR COMPLETE CONSTRUCTION NOTES.

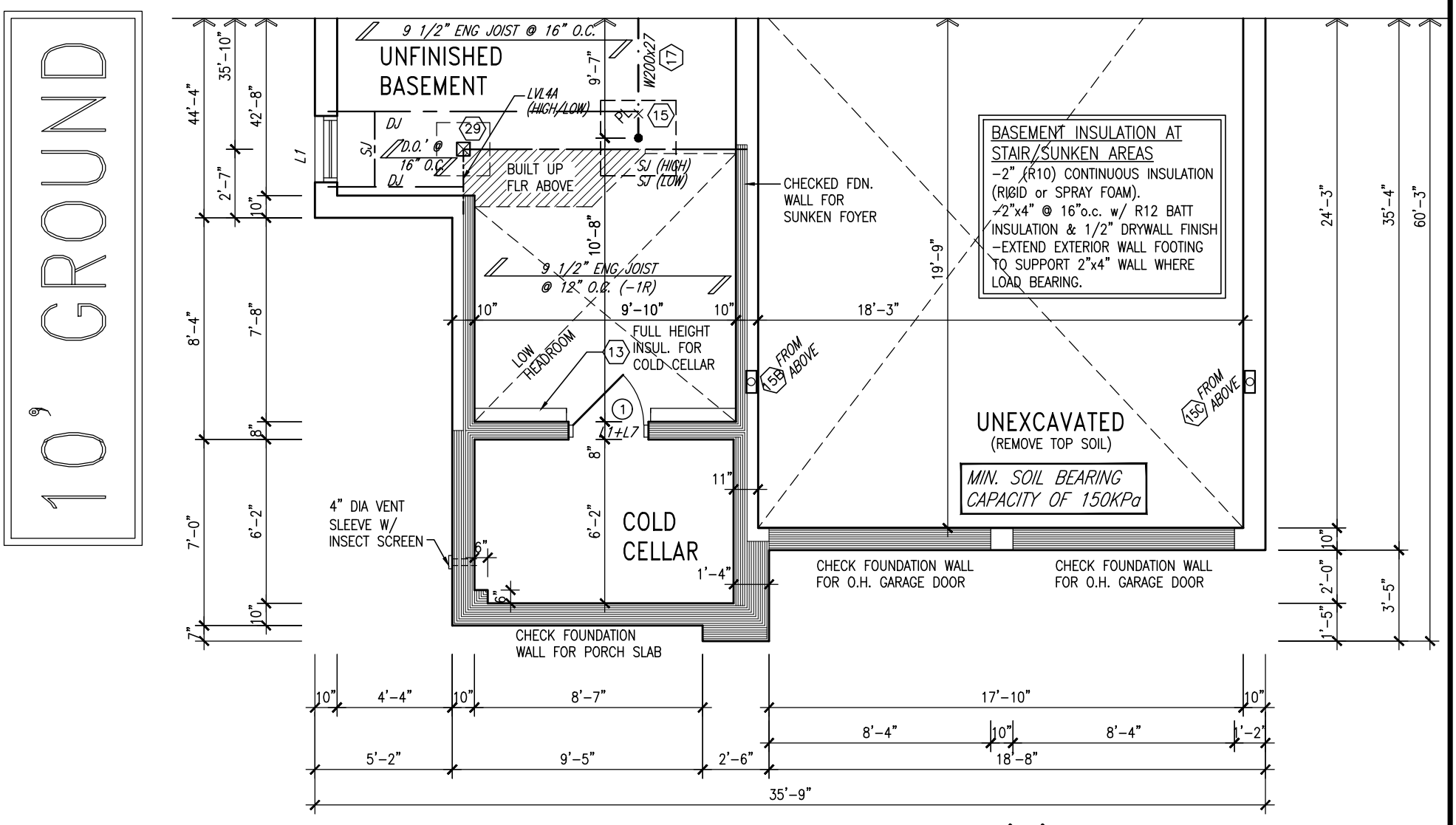

PARTIAL BASEMENT PLAN 'C'

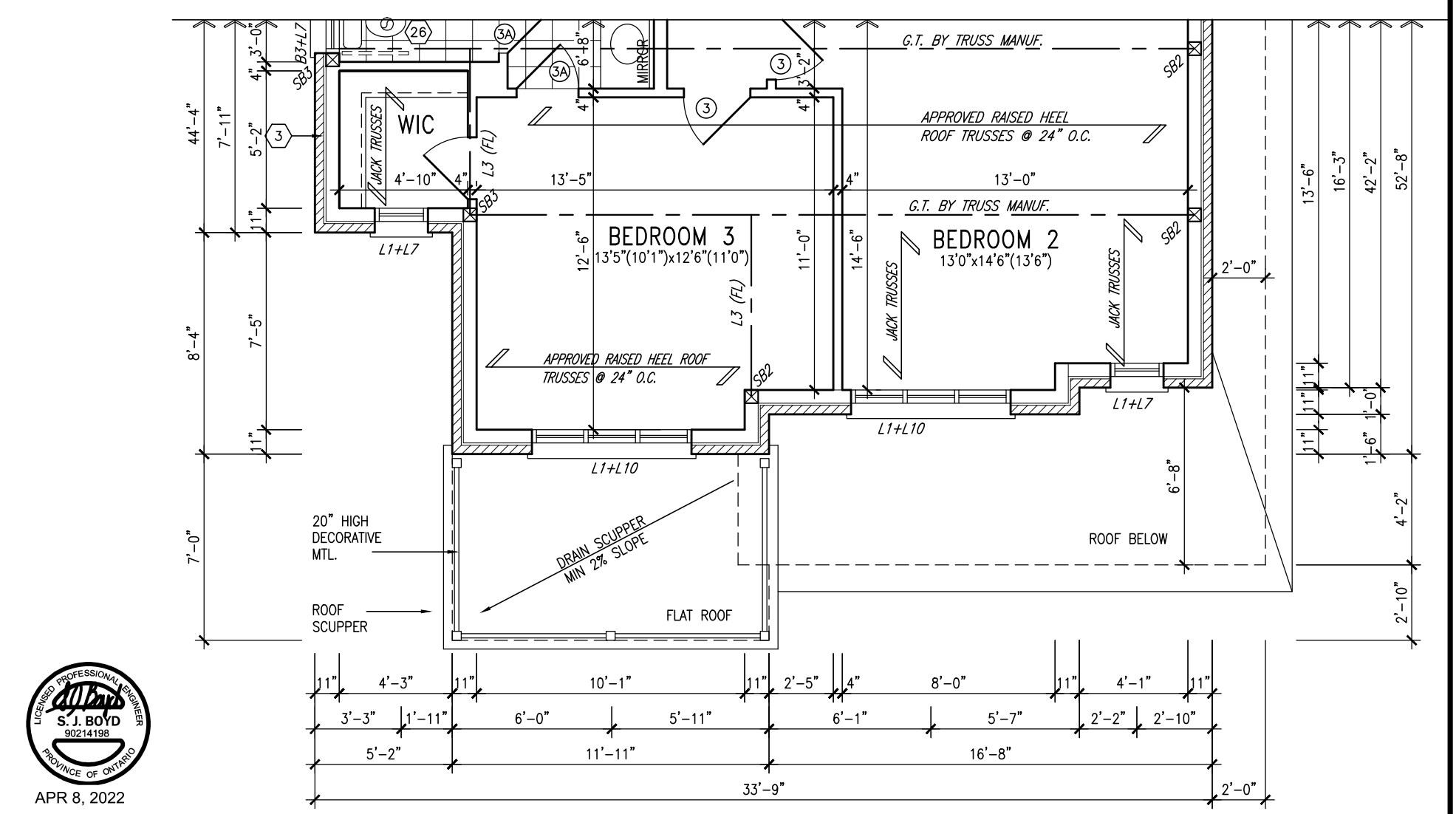

PARTIAL SECOND FLOOR PLAN 'B'

LICENSED PROFESSIONAL ENGINEER S. J. BOYD 90214198 PROVINCE OF ONTARIO

APR 8, 2022

no.	description	date	by
9	.	.	.
8	.	.	.
7	.	.	.
6	REVISED AS PER ENG'S COMMENTS	APR 08-22	RC
5	REVISED AS PER FLOOR LAYOUTS	APR 05-22	RC
4	10' GROUND FLOOR	JLU 22-21	KL
3	ADDED OPT. 9' BASEMENT	JUL 22-21	KL
2	REVISED AS PER ENG'S COMMENTS	FEB 07-18	RC
1	ISSUED FOR CLIENT REVIEW	.	.

The undersigned has reviewed and takes responsibility for this design and has the qualifications and meets the requirements set out in the Ontario Building Code to be a Designer.

qualification information
Wellington Jno-Baptiste — signature — BCIN 25591
registration information
VA3 Design Inc. — 42658

Contractor must verify all dimensions on the job and report any discrepancy to the Designer before proceeding with the work. All drawings and specifications are instruments of service and the property of the Designer which must be returned at the completion of the work. Drawings are not to be scaled.

VA3 DESIGN
255 Consumers Rd Suite 120
Toronto ON M2J 1R4
t 416.630.2255 f 416.630.4782
va3design.com

BAYVIEW WELLINGTON

S42-2
RIDEAU 2

project name: GREEN VALLEY EAST
municipality: BRADFORD, ONT.
project no.: 16023

date: FEBRUARY,2017
PART. PLANS ELEV. 'B' & 'C'
drawing no.: 5

drawn by: WT
checked by: RC
scale: 3/16" = 1'-0"
file name: 16023-S42-2-10GRND

RICHARD - H:\ARCHIVE\WORKING\2016\16023.BW\Units\42'\16023-S42-2-10GRND.dwg - Fri - Apr 8 2022 - 2:18 PM

All drawings specifications, related documents and design are the copyright property of VA3 DESIGN. Reproduction of this property in whole or in part is strictly prohibited without VA3 DESIGN's written permission.

It is the builder's complete responsibility to ensure that all plans submitted for approval fully comply with the Architectural Guidelines and all applicable regulations and requirements including zoning provisions and any provisions in the subdivision agreement. The Control Architect is not responsible in any way for examining or approving site (lotting) plans or working drawings with respect to any zoning or building code or permit matter or that any house can be properly built or located on its lot.

This is to certify that these plans comply with the applicable Architectural Design Guidelines approved by the Town of BRADFORD / WEST GWILLIMBURY.

GRAB BAR NOTE:

STUD WALL REINFORCEMENT FOR FUTURE GRAB BARS IN MAIN BATHROOM

REINFORCEMENT OF STUD WALLS SHALL BE INSTALLED ADJACENT TO WATER CLOSETS AND SHOWER OR BATHTUB IN MAIN BATHROOM PER OBC. DIV. B–9.5.2.3. REFER TO FOLLOWING SECTIONS FOR THE FIXTURES LISTED. WATER CLOSET: 3.8.3.8.(3)(a) & 3.8.3.8.(3)(c). SHOWER 3.8.3.13.(2)(g). BATHTUB 3.8.3.13.(4)(e). FREE STANDING BATHTUB EXCLUDED. SEE DETAILS PROVIDED.

GB–NOTE–2020.dwg

FLAT ROOF OVER LIVING SPACE: R2

2 PLY WATERPROOFING MEMBRANE ON 5/8" EXT. GRADE PLYWD. ON 2"x4" CROSS PURLINS (CUT DIAGONALLY @ 12" O.C. ON 2"X10" JOISTS @ 12" o.c. FLAT ROOF TO BE INSULATED W/ SPRAY INSULATION (RSI 5.46 (R31)) MIN SLOPE 2:12

NOTE: SPACE ALL FLOOR JOISTS @ 12" O.C. UNDER ALL CERAMIC TILE AREAS.

NOTE: ALL LVL'S SUPPORTING FLOOR LOADS ARE TO BE SPECIFIED BY FLOOR TRUSS MANUFACTURER.

NOTE: FLOOR FRAMING INFO REFER TO SHOP DRAWINGS FOR ALL TRUSS–JOIST INFORMATION AND DETAILS. UNLESS OTHERWISE NOTED.

OUTDOOR AIR INTAKE SEPARATION

ALL OUTDOOR AIR INTAKE VENTS TO BE SEPARATED A MINIMUM DISTANCE FROM SOURCES OF CONTAMINATION PER OBC. DIV. B– TABLE 6.2.3.12.

- KITCHEN EXHAUST. 3.0m
- DRIVEWAY, PARKING SPACE, ROAD. 1.5m
- SOLID FUEL APPLIANCE EXHAUST 3.0m

KIT–EX–NOTE–2020.dwg

ROOF NOTE R1

2"x8" @ 16" O.C. P.T. W/ 2"x4" @ 12" O.C. DIAGONALLY CUT CROSS PURLINS W/ 5/8" EXTERIOR GRADE SHEATHING W/ SINGLE PLY ROOF MEMBRANE

CANOPY ROOF NOTE:

P.T. 2"x8" ROOF JOIST @ 16" O.C., 5/8" SHEATHING SLOPED FORWARD WITH PREFIN. METAL CAP

NOTE:
REFER TO STANDARD PLAN FOR COMPLETE CONSTRUCTION NOTES.

NOTE: ROOF FRAMING

ROOF TRUSS INFORMATION REFER TO ROOF TRUSS SHOP DRAWINGS FOR ALL ROOF FRAMING INFORMATION UNLESS OTHERWISE NOTED.

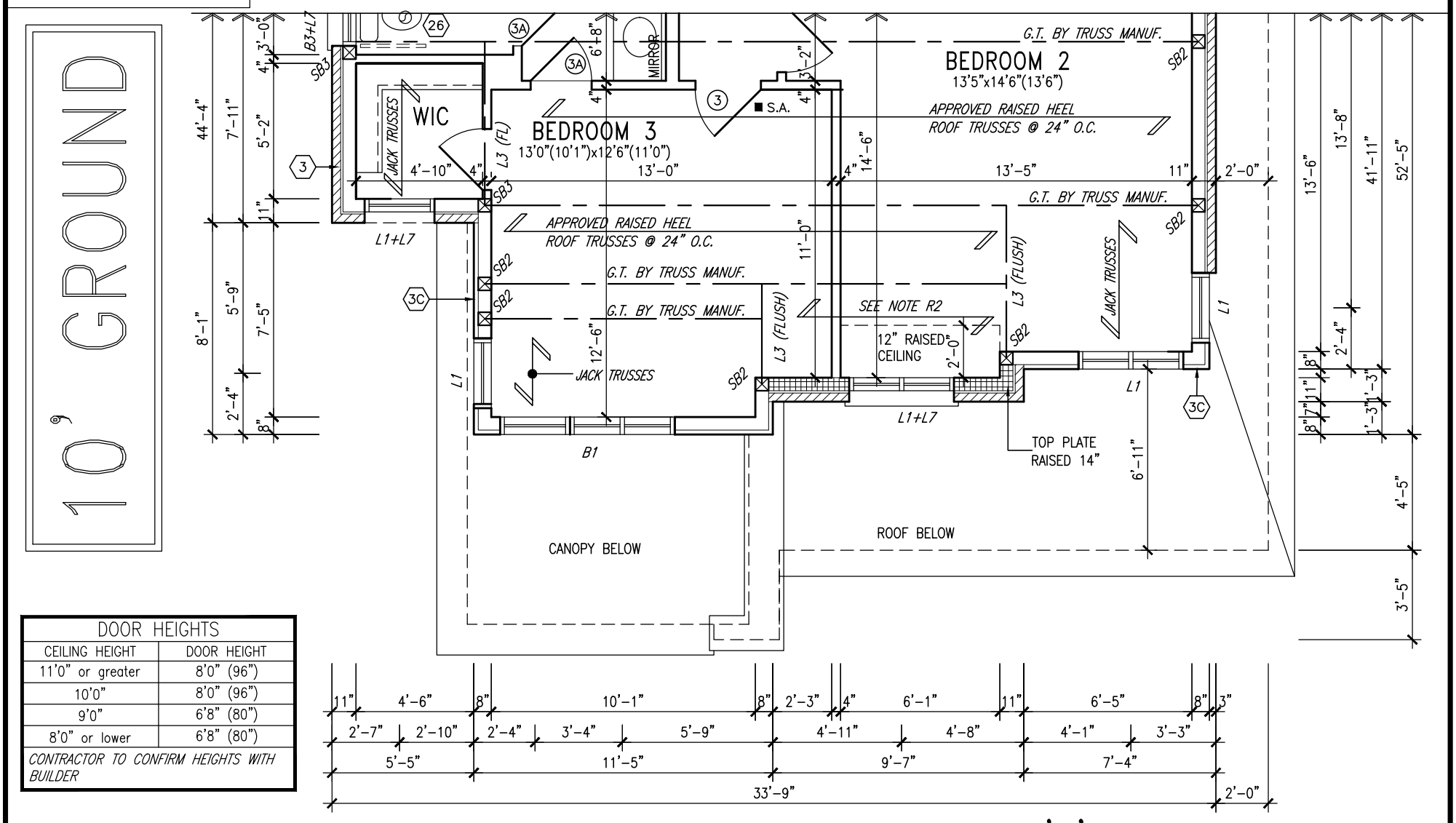

DOOR HEIGHTS	
CEILING HEIGHT	DOOR HEIGHT
11'0" or greater	8'0" (96")
10'0"	8'0" (96")
9'0"	6'8" (80")
8'0" or lower	6'8" (80")
CONTRACTOR TO CONFIRM HEIGHTS WITH BUILDER	

PARTIAL SECOND FLOOR PLAN 'C'

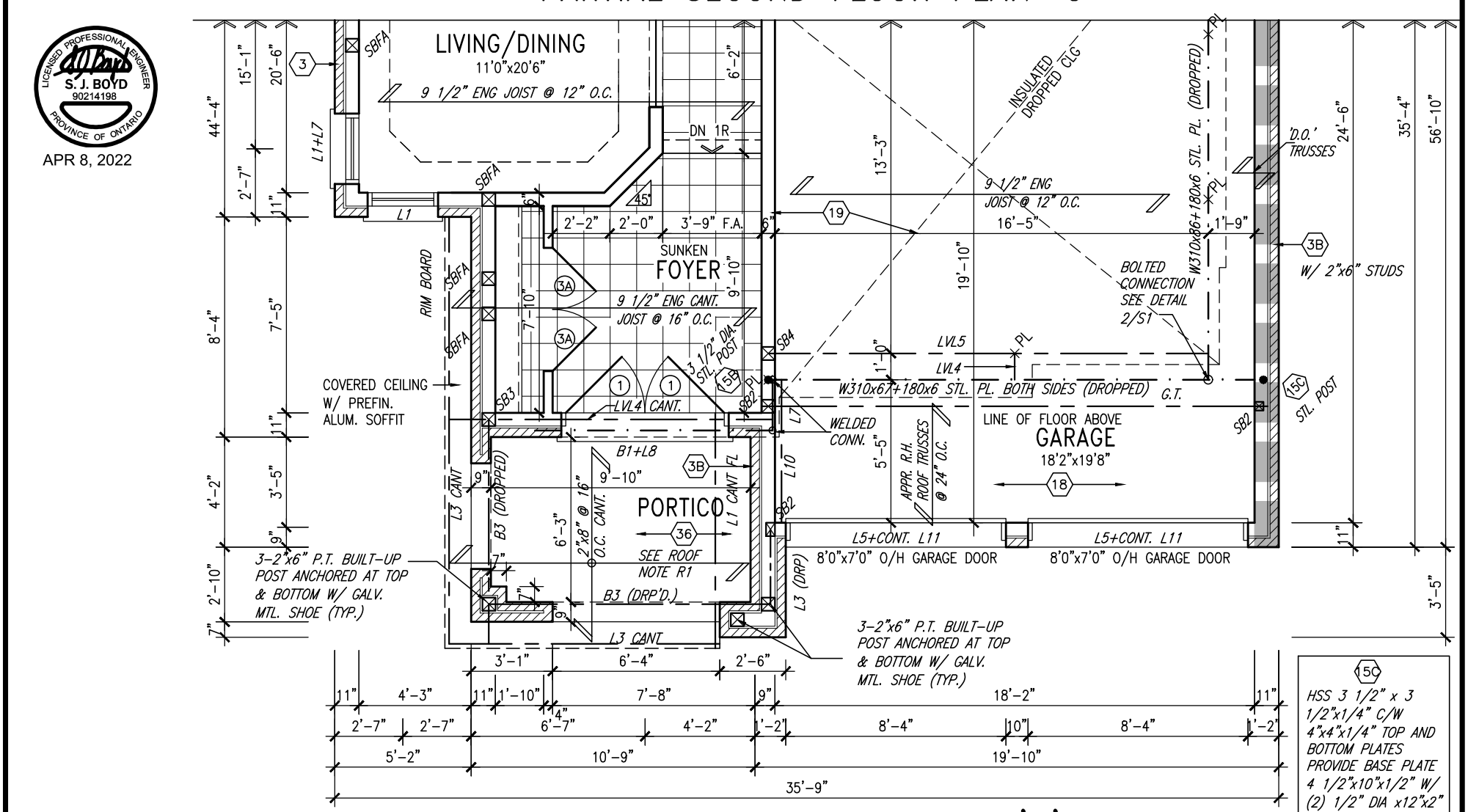

APR 8, 2022

HSS 3 1/2" x 3 1/2"x1/4" C/W 4"x4"x1/4" TOP AND BOTTOM PLATES PROVIDE BASE PLATE 4 1/2"x10"x1/2" W/ (2) 1/2" DIA x12"x2" HOOK ANCHORS FIELD WELD COL TO BASE PLATE

PARTIAL GROUND FLOOR PLAN 'C'
(10'–0" GROUND)

no.	description	date	by
9	.	.	.
8	.	.	.
7	.	.	.
6	REVISED AS PER ENG'S COMMENTS	APR 08–22	RC
5	REVISED AS PER FLOOR LAYOUTS	APR 05–22	RC
4	10' GROUND FLOOR	JLU 22–21	KL
3	ADDED OPT. 9' BASEMENT	JUL 22–21	KL
2	REVISED AS PER ENG'S COMMENTS	FEB 07–18	RC
1	ISSUED FOR CLIENT REVIEW	.	.

The undersigned has reviewed and takes responsibility for this design and has the qualifications and meets the requirements set out in the Ontario Building Code to be a Designer.

qualification information
Wellington Jno–Baptiste — signature — BCIN 25591
registration information
VA3 Design Inc. — 42658

Contractor must verify all dimensions on the job and report any discrepancy to the Designer before proceeding with the work. All drawings and specifications are instruments of service and the property of the Designer which must be returned at the completion of the work. Drawings are not to be scaled.

VA3 DESIGN
255 Consumers Rd Suite 120
Toronto ON M2J 1R4
t 416.630.2255 f 416.630.4782
va3design.com

BAYVIEW WELLINGTON

S42–2
RIDEAU 2

project name: GREEN VALLEY EAST
municipality: BRADFORD, ONT.
project no. 16023

date: FEBRUARY,2017
PART. PLANS ELEV. 'C'
drawn by: WT
checked by: RC
scale: 3/16" = 1'–0"
file name: 16023–S42–2–10GRND
drawing no. 6

RICHARD – H:\ARCHIVE\WORKING\2016\16023.BW\Units\42"\16023–S42–2–10GRND.dwg – Fri – Apr 8 2022 – 2:18 PM

All drawings specifications, related documents and design are the copyright property of VA3 DESIGN. Reproduction of this property in whole or in part is strictly prohibited without VA3 DESIGN's written permission.

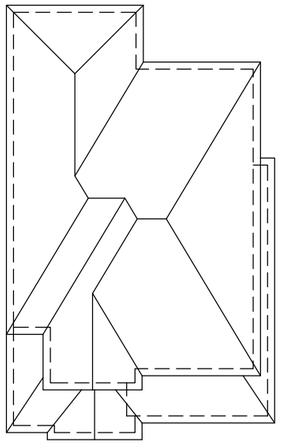

ROOF PLAN 'A'

NTS

LICENSED PROFESSIONAL ENGINEER
S. J. BOYD
90214198
PROVINCE OF ONTARIO

APR 8, 2022

R.W.L. AS REQUIRED & AS PER MUNICIPALITY

SEE DETAIL S4 FOR 9'-0" BASEMENT COND

It is the builder's complete responsibility to ensure that all plans submitted for approval fully comply with the Architectural Guidelines and all applicable regulations and requirements including zoning provisions and any provisions in the subdivision agreement. The Control Architect is not responsible in any way for examining or approving site (lotting) plans or working drawings with respect to any zoning or building code or permit matter or that any house can be properly built or located on its lot.

This is to certify that these plans comply with the applicable Architectural Design Guidelines approved by the Town of BRADFORD / WEST GWILLIMBURY.

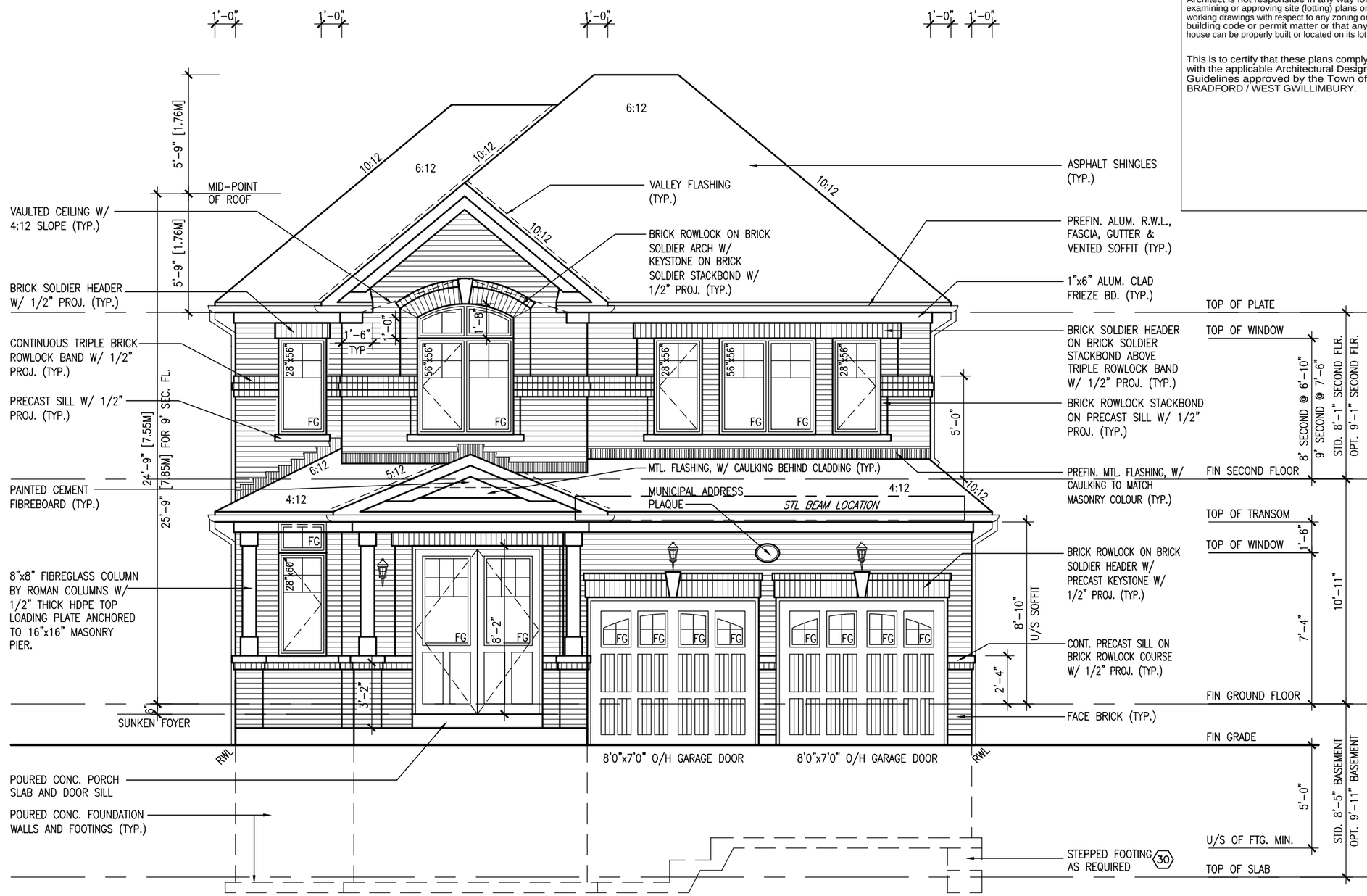

FRONT ELEVATION 'A'

10' GROUND

S42-2
RIDEAU 2

project no. 16023

drawing no. 7

BAYVIEW WELLINGTON

municipality BRADFORD, ONT.

project name GREEN VALLEY EAST

FRONT ELEVATION 'A'

date FEBRUARY,2017 | checked by RC | scale 3/16" = 1'-0" | file name 16023-S42-2-10GRND

drawn by WT | RICHARD - H:\ARCHIVE\WORKING\2016\16023.BW\Units\42\16023-S42-2-10GRND.dwg - Fri - Apr 8, 2022 - 2:18 PM

VA3 DESIGN
255 Consumers Rd Suite 120
Toronto ON M2J 1R4
t 416.630.2255 f 416.630.4782
va3design.com

Contractor must verify all dimensions on the job and report any discrepancy to the Designer before proceeding with the work. All drawings remain the property of the Designer and may not be reproduced without the written consent of the Designer which must be returned at the completion of the work. Drawings are not to be scaled.

no.	description	date	by
9	.	.	.
8	.	.	.
7	.	.	.
6	REVISED AS PER ENG'S COMMENTS	APR 08-22	RC
5	REVISED AS PER FLOOR LAYOUTS	APR 05-22	RC
4	10' GROUND FLOOR	JLU 22-21	KL
3	ADDED OPT. 9' BASEMENT	JUL 22-21	KL
2	REVISED AS PER ENG'S COMMENTS	FEB 07-18	RC
1	ISSUED FOR CLIENT REVIEW	.	.

All drawings specifications, related documents and design are the copyright property of VA3 DESIGN. Reproduction of this property in whole or in part is strictly prohibited without VA3 DESIGN's written permission.

REFER TO FRONT ELEVATION FOR TYPICAL NOTES	R.W.L. AS REQUIRED & AS PER MUNICIPALITY	SEE DETAIL S4 FOR 9'-0" BASEMENT COND

It is the builder's complete responsibility to ensure that all plans submitted for approval fully comply with the Architectural Guidelines and all applicable regulations and requirements including zoning provisions and any provisions in the subdivision agreement. The Control Architect is not responsible in any way for examining or approving site (lotting) plans or working drawings with respect to any zoning or building code or permit matter or that any house can be properly built or located on its lot.

This is to certify that these plans comply with the applicable Architectural Design Guidelines approved by the Town of BRADFORD / WEST GWILLIMBURY.

LICENSED PROFESSIONAL ENGINEER
S. J. BOYD
90214198
PROVINCE OF ONTARIO
APR 8, 2022

WALL AREA	1095.50 SQ. FT.
LIMITING DISTANCE	1.2 M (7%)
OPENING ALLOWED	76.69 SQ. FT.
OPENING PROVIDED	52.12 SQ. FT.(GLASS AREA ONLY)

LEFT SIDE ELEVATION 'A'

10' GROUND

S42-2
RIDEAU 2

project no. 16023

drawing no. 8

BAYVIEW WELLINGTON

municipality: BRADFORD, ONT.

LEFT SIDE ELEVATION 'A'

project name: GREEN VALLEY EAST

date: FEBRUARY,2017
drawn by: WT
checked by: RC
scale: 3/16" = 1'-0"
file name: 16023-S42-2-10GRND
RICHARD - H:\ARCHIVE\WORKING\2016\16023.BW\Units\s2\16023-S42-2-10GRND.dwg - Fri - Apr 8, 2022 - 2:18 PM

VA3 DESIGN
255 Consumers Rd Suite 120
Toronto ON M2J 1R4
t 416.630.2255 f 416.630.4782
va3design.com

Contractor must verify all dimensions on the job and report any discrepancy to the Designer before proceeding with the work. All dimensions on specifications and instruments of service are the property of the Designer which must be returned at the completion of the work. Drawings are not to be scaled.

no.	description	date	by
9	.	.	.
8	.	.	.
7	.	.	.
6	REVISED AS PER ENG'S COMMENTS	APR 08-22	RC
5	REVISED AS PER FLOOR LAYOUTS	APR 05-22	RC
4	10' GROUND FLOOR	JLU 22-21	KL
3	ADDED OPT. 9' BASEMENT	JUL 22-21	KL
2	REVISED AS PER ENG'S COMMENTS	FEB 07-18	RC
1	ISSUED FOR CLIENT REVIEW	.	.

All drawings specifications, related documents and design are the copyright property of VA3 DESIGN. Reproduction of this property in whole or in part is strictly prohibited without VA3 DESIGN's written permission.

REFER TO FRONT ELEVATION FOR TYPICAL NOTES	R.W.L. AS REQUIRED & AS PER MUNICIPALITY	SEE DETAIL S4 FOR 9'-0" BASEMENT COND

It is the builder's complete responsibility to ensure that all plans submitted for approval fully comply with the Architectural Guidelines and all applicable regulations and requirements including zoning provisions and any provisions in the subdivision agreement. The Control Architect is not responsible in any way for examining or approving site (lotting) plans or working drawings with respect to any zoning or building code or permit matter or that any house can be properly built or located on its lot.

This is to certify that these plans comply with the applicable Architectural Design Guidelines approved by the Town of BRADFORD / WEST GWILLIMBURY.

LICENSED PROFESSIONAL ENGINEER
S. J. BOYD
90214198
PROVINCE OF ONTARIO
APR 8, 2022

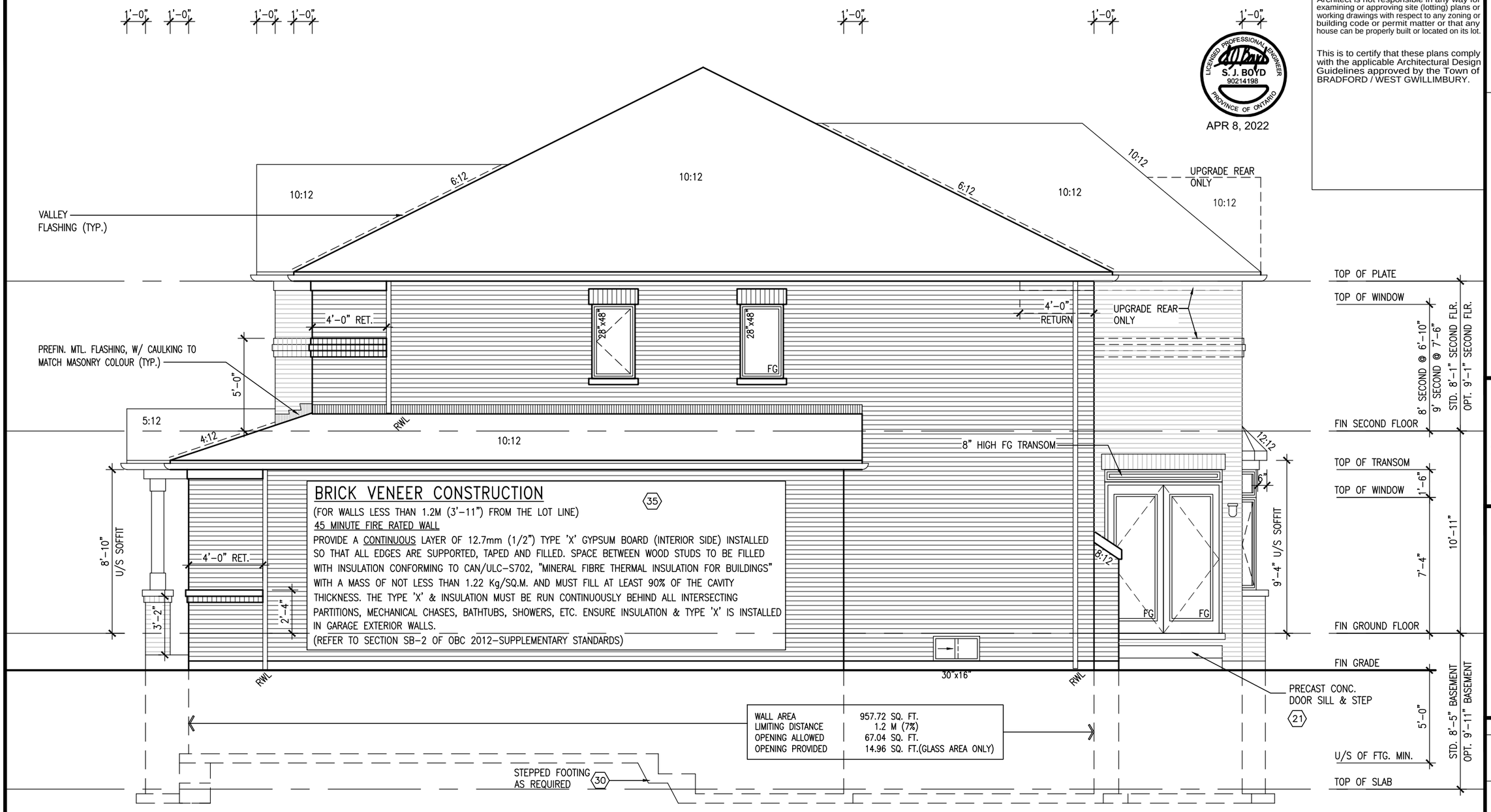

BRICK VENEER CONSTRUCTION

35

(FOR WALLS LESS THAN 1.2M (3'-11") FROM THE LOT LINE)

45 MINUTE FIRE RATED WALL

PROVIDE A CONTINUOUS LAYER OF 12.7mm (1/2") TYPE 'X' GYPSUM BOARD (INTERIOR SIDE) INSTALLED SO THAT ALL EDGES ARE SUPPORTED, TAPED AND FILLED. SPACE BETWEEN WOOD STUDS TO BE FILLED WITH INSULATION CONFORMING TO CAN/ULC-S702, "MINERAL FIBRE THERMAL INSULATION FOR BUILDINGS" WITH A MASS OF NOT LESS THAN 1.22 Kg/SQ.M. AND MUST FILL AT LEAST 90% OF THE CAVITY THICKNESS. THE TYPE 'X' & INSULATION MUST BE RUN CONTINUOUSLY BEHIND ALL INTERSECTING PARTITIONS, MECHANICAL CHASES, BATHTUBS, SHOWERS, ETC. ENSURE INSULATION & TYPE 'X' IS INSTALLED IN GARAGE EXTERIOR WALLS.

(REFER TO SECTION SB-2 OF OBC 2012-SUPPLEMENTARY STANDARDS)

WALL AREA	957.72 SQ. FT.
LIMITING DISTANCE	1.2 M (7%)
OPENING ALLOWED	67.04 SQ. FT.
OPENING PROVIDED	14.96 SQ. FT.(GLASS AREA ONLY)

RIGHT SIDE ELEVATION 'A'

10' GROUND

BAYVIEW WELLINGTON

S42-2
RIDEAU 2

project no. 16023

drawing no. 9

municipality: BRADFORD, ONT.

RIGHT SIDE ELEVATION 'A'

project name: GREEN VALLEY EAST

date: FEBRUARY,2017

drawn by: WT

checked by: RC

scale: 3/16" = 1'-0"

file name: 16023-S42-2-10GRND

RICHARD - H:\ARCHIVE\WORKING\2016\16023.BW\Units\42\16023-S42-2-10GRND.dwg - Fri - Apr 8, 2022 - 2:18 PM

VA3 DESIGN
255 Consumers Rd Suite 120
Toronto ON M2J 1R4
t 416.630.2255 f 416.630.4782
va3design.com

Contractor must verify all dimensions on the job and report any discrepancy to the Designer before proceeding with the work. All drawings remain the property of the Designer and must be returned at the completion of the work. Drawings are not to be scaled.

no.	description	date	by
9	.	.	.
8	.	.	.
7	.	.	.
6	REVISED AS PER ENG'S COMMENTS	APR 08-22	RC
5	REVISED AS PER FLOOR LAYOUTS	APR 05-22	RC
4	10' GROUND FLOOR	JLU 22-21	KL
3	ADDED OPT. 9' BASEMENT	JUL 22-21	KL
2	REVISED AS PER ENG'S COMMENTS	FEB 07-18	RC
1	ISSUED FOR CLIENT REVIEW	.	.

All drawings specifications, related documents and design are the copyright property of VA3 DESIGN. Reproduction of this property in whole or in part is strictly prohibited without VA3 DESIGN's written permission.

UNINSULATED OPENINGS (PER OBC. SB-12,3.1.1(7))

S42-2 EL.A/A REAR UPG. W/ 8' SEC	ENERGY EFFICIENCY – OBC SB12		
ELEVATION	WALL AREA S.F.	OPENING S.F.	PERCENTAGE
FRONT	738.89 S.F.	174.39 S.F.	23.60 %
LEFT SIDE	1095.50 S.F.	82.44 S.F.	7.53 %
RIGHT SIDE	1095.50 S.F.	77.94 S.F.	7.11 %
REAR	730.42 S.F.	171.39 S.F.	23.46 %
* OPENINGS OMITTED AS PER SB-12 3.1.1.9(4) MAX 19.9 S.F. REFER TO ELEVATION FOR LOCATION		0.00 S.F.	
TOTAL SQ. FT.	3660.31 S.F.	506.16 S.F.	13.83 %
TOTAL SQ. M.	340.05 S.M.	47.02 S.M.	13.83 %

UNINSULATED OPENINGS (PER OBC. SB-12,3.1.1(7))

S42-2 EL.B/B REAR UPG. W/ 8' SEC	ENERGY EFFICIENCY – OBC SB12		
ELEVATION	WALL AREA S.F.	OPENING S.F.	PERCENTAGE
FRONT	745.92 S.F.	163.89 S.F.	21.97 %
LEFT SIDE	1106.00 S.F.	82.44 S.F.	7.45 %
RIGHT SIDE	1109.00 S.F.	77.94 S.F.	7.03 %
REAR	731.42 S.F.	171.39 S.F.	23.43 %
* OPENINGS OMITTED AS PER SB-12 3.1.1.9(4) MAX 19.9 S.F. REFER TO ELEVATION FOR LOCATION		0.00 S.F.	
TOTAL SQ. FT.	3692.34 S.F.	495.66 S.F.	13.42 %
TOTAL SQ. M.	343.03 S.M.	46.05 S.M.	13.42 %

UNINSULATED OPENINGS (PER OBC. SB-12,3.1.1(7))

S42-2 EL.C/C REAR UPG. W/ 8' SEC	ENERGY EFFICIENCY – OBC SB12		
ELEVATION	WALL AREA S.F.	OPENING S.F.	PERCENTAGE
FRONT	734.49 S.F.	178.44 S.F.	24.29 %
LEFT SIDE	1104.52 S.F.	82.89 S.F.	7.50 %
RIGHT SIDE	1100.75 S.F.	90.44 S.F.	8.22 %
REAR	731.42 S.F.	171.39 S.F.	23.43 %
* OPENINGS OMITTED AS PER SB-12 3.1.1.9(4) MAX 19.9 S.F. REFER TO ELEVATION FOR LOCATION		0.00 S.F.	
TOTAL SQ. FT.	3671.18 S.F.	523.16 S.F.	14.25 %
TOTAL SQ. M.	341.06 S.M.	48.60 S.M.	14.25 %

REFER TO FRONT ELEVATION FOR TYPICAL NOTES	R.W.L. AS REQUIRED & AS PER MUNICIPALITY	SEE DETAIL S4 FOR 9'-0" BASEMENT COND

It is the builder's complete responsibility to ensure that all plans submitted for approval fully comply with the Architectural Guidelines and all applicable regulations and requirements including zoning provisions and any provisions in the subdivision agreement. The Control Architect is not responsible in any way for examining or approving site (lotting) plans or working drawings with respect to any zoning or building code or permit matter or that any house can be properly built or located on its lot.

This is to certify that these plans comply with the applicable Architectural Design Guidelines approved by the Town of BRADFORD / WEST GWILLIMBURY.

REAR ELEVATION 'A', 'B' & 'C'

10' GROUND

LICENSED PROFESSIONAL ENGINEER
S. J. BOYD
90214198
PROVINCE OF ONTARIO
APR 8, 2022

no.	description	date	by
9	.	.	.
8	.	.	.
7	.	.	.
6	REVISED AS PER ENG'S COMMENTS	APR 08-22	RC
5	REVISED AS PER FLOOR LAYOUTS	APR 05-22	RC
4	10' GROUND FLOOR	JLU 22-21	KL
3	ADDED OPT. 9' BASEMENT	JUL 22-21	KL
2	REVISED AS PER ENG'S COMMENTS	FEB 07-18	RC
1	ISSUED FOR CLIENT REVIEW	.	.

Contractor must verify all dimensions on the job and report any discrepancy to the Designer before proceeding with the work. All drawings and specifications are instruments of service and the property of the Designer which must be returned at the completion of the work. Drawings are not to be scaled.

VA3 DESIGN
255 Consumers Rd Suite 120
Toronto ON M2J 1R4
t 416.630.2255 f 416.630.4782
va3design.com

project name: GREEN VALLEY EAST
municipality: BRADFORD, ONT.
BAYVIEW WELLINGTON
S42-2 RIDEAU 2
project no. 16023
drawing no. 10
REAR ELEVATION 'A', 'B' & 'C'
date: FEBRUARY, 2017
drawn by: WT
checked by: RC
scale: 3/16" = 1'-0"
file name: 16023-S42-2-10GRND
RICHARD – H:\ARCHIVE\WORKING\2016\16023.BW\Units\42\16023-S42-2-10GRND.dwg – Fri – Apr 8, 2022 – 2:18 PM

All drawings specifications, related documents and design are the copyright property of VA3 DESIGN. Reproduction of this property in whole or in part is strictly prohibited without VA3 DESIGN's written permission.

AREA CALCULATIONS	ELEV. A	ELEV. B	ELEV. C
GROUND FLOOR AREA	1310.4 SF	1316.2 SF	1316.2 SF
SECOND FLOOR AREA	1554.8 SF	1572.4 SF	1563.0 SF
SUBTOTAL	2865.2 SF	2888.6 SF	2879.2 SF
DEDUCT ALL OPENINGS	0 SF	0 SF	0 SF
TOTAL NET AREA	**2865 SF**	**2889 SF**	**2879 SF**
	266.2 m2	268.4 m2	267.5 m2
FINISHED BSMT AREA	0 SF	0 SF	0 SF
TOTAL NET AREA	**2865 SF**	**2889 SF**	**2879 SF**
W/ FIN BSMT	266.2 m2	268.4 m2	267.5 m2
COVERAGE W/O PORCH	1758.6 SF	1764.1 SF	1764.8 SF
	163.4 m2	163.9 m2	164.0 m2
COVERAGE W/PORCH	1907.5 SF	1842.6 SF	1844.1 SF
	177.2 m2	171.2 m2	171.3 m2
COVERAGE W/PORCH &	2095.3 SF	2030.4 SF	2031.8 SF
OPT. LOGGIA	194.7 m2	188.6 m2	188.8 m2

REFER TO FRONT ELEVATION FOR TYPICAL NOTES

R.W.L. AS REQUIRED & AS PER MUNICIPALITY

SEE DETAIL S4 FOR 9'-0" BASEMENT COND

It is the builder's complete responsibility to ensure that all plans submitted for approval fully comply with the Architectural Guidelines and all applicable regulations and requirements including zoning provisions and any provisions in the subdivision agreement. The Control Architect is not responsible in any way for examining or approving site (lotting) plans or working drawings with respect to any zoning or building code or permit matter or that any house can be properly built or located on its lot.

This is to certify that these plans comply with the applicable Architectural Design Guidelines approved by the Town of BRADFORD / WEST GWILLIMBURY.

PART. RIGHT SIDE ELEV. 'A'
W/ OPT. LOGGIA
EL. 'B' & 'C' SIMILAR

PART. REAR ELEVATION 'A'
W/ OPT. LOGGIA
EL. 'B' & 'C' SIMILAR

10' GROUND

LICENSED PROFESSIONAL ENGINEER
S. J. BOYD
90214198
PROVINCE OF ONTARIO
APR 8, 2022

S42-2
RIDEAU 2

project no. 16023

drawing no. 11

BAYVIEW WELLINGTON

municipality
BRADFORD, ONT.

PARTIAL ELEVATIONS – OPT. LOGGIA

project name
GREEN VALLEY EAST

date
FEBRUARY,2017

drawn by
WT

checked by
RC

scale
3/16" = 1'-0"

file name
16023-S42-2-10GRND

RICHARD – H:\ARCHIVE\WORKING\2016\16023.BW\Units\s42\16023-S42-2-10GRND.dwg – Fri – Apr 8, 2022 – 2:18 PM

VA3 DESIGN
255 Consumers Rd Suite 120
Toronto ON M2J 1R4
t 416.630.2255 f 416.630.4782
va3design.com

Contractor must verify all dimensions on the job and report any discrepancy to the Designer before proceeding with the work. All drawings and specifications are instruments of service and the property of the Designer which must be returned at the completion of the work. Drawings are not to be scaled.

All drawings specifications, related documents and design are the copyright property of VA3 DESIGN. Reproduction of this property in whole or in part is strictly prohibited without VA3 DESIGN's written permission.

no.	description	date	by
9	.	.	.
8	.	.	.
7	.	.	.
6	REVISED AS PER ENG'S COMMENTS	APR 08-22	RC
5	REVISED AS PER FLOOR LAYOUTS	APR 05-22	RC
4	10' GROUND FLOOR	JLU 22-21	KL
3	ADDED OPT. 9' BASEMENT	JUL 22-21	KL
2	REVISED AS PER ENG'S COMMENTS	FEB 07-18	RC
1	ISSUED FOR CLIENT REVIEW	.	.

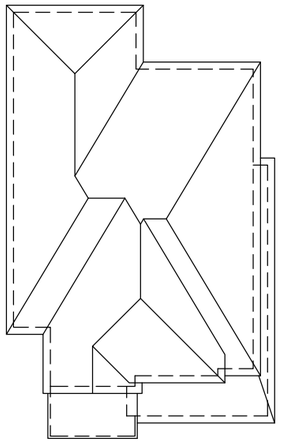

ROOF PLAN 'B'

NTS

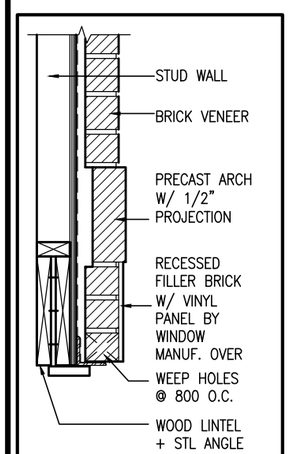

Y BRICK ARCH W/ VINYL PANEL BELOW DETAIL NTS.

R.W.L. AS REQUIRED & AS PER MUNICIPALITY

SEE DETAIL S4 FOR 9'-0" BASEMENT COND

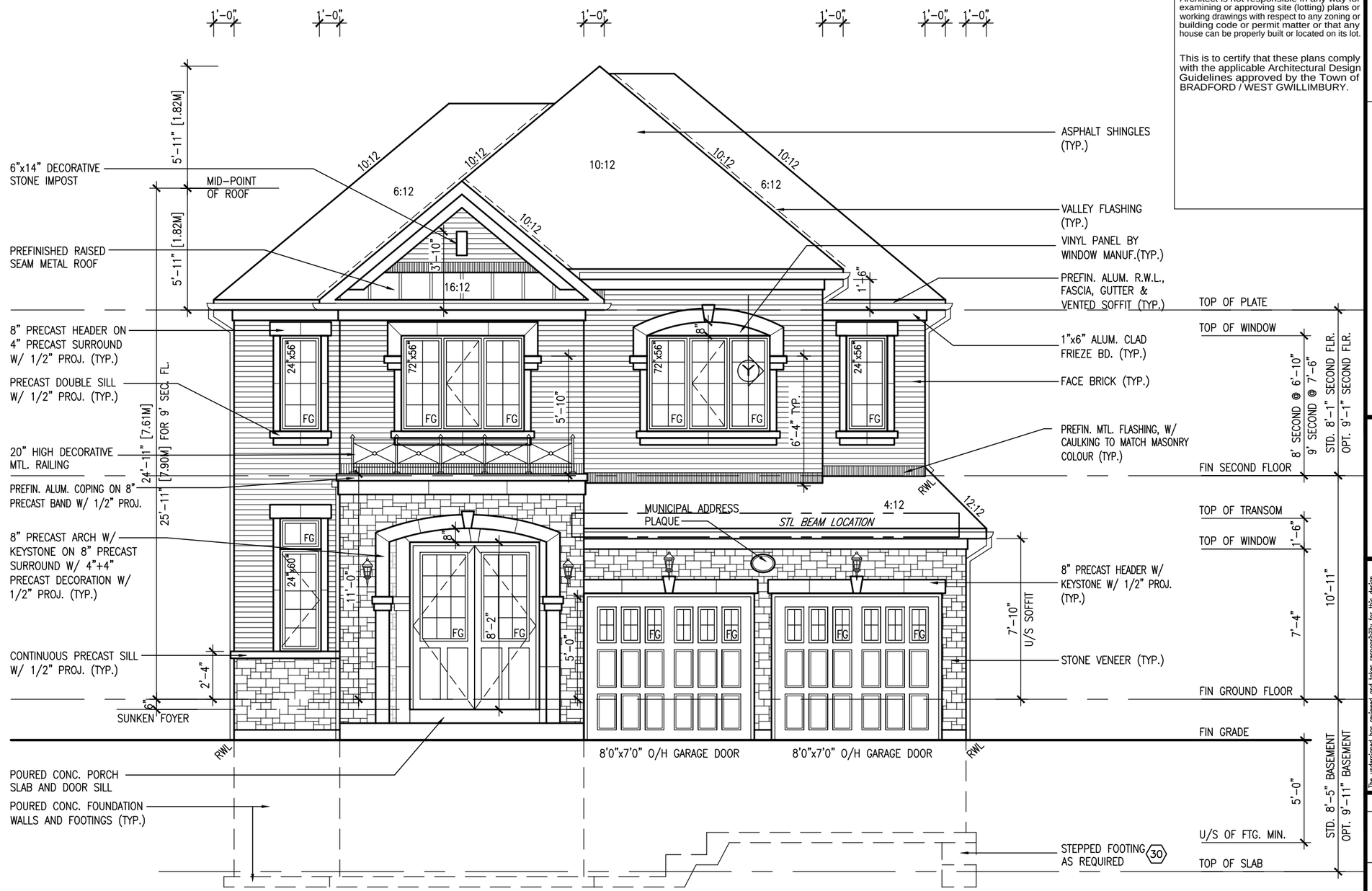

FRONT ELEVATION 'B'

10' GROUND

It is the builder's complete responsibility to ensure that all plans submitted for approval fully comply with the Architectural Guidelines and all applicable regulations and requirements including zoning provisions and any provisions in the subdivision agreement. The Control Architect is not responsible in any way for examining or approving site (lotting) plans or working drawings with respect to any zoning or building code or permit matter or that any house can be properly built or located on its lot.

This is to certify that these plans comply with the applicable Architectural Design Guidelines approved by the Town of BRADFORD / WEST GWILLIMBURY.

S.J. BOYD 90214198 LICENSED PROFESSIONAL ENGINEER PROVINCE OF ONTARIO

APR 8, 2022

S42-2
RIDEAU 2

project no. 16023

drawing no. 12

BAYVIEW WELLINGTON

municipality BRADFORD, ONT.

project name GREEN VALLEY EAST

FRONT ELEVATION 'B'

date FEBRUARY,2017 | checked by RC | scale 3/16" = 1'-0" | file name 16023-S42-2-10GRND

drawn by WT | RICHARD - H:\ARCHIVE\WORKING\2016\16023.BW\Units\s42\16023-S42-2-10GRND.dwg - Fri - Apr 8 2022 - 2:18 PM

VA3 DESIGN
255 Consumers Rd Suite 120
Toronto ON M2J 1R4
t 416.630.2255 f 416.630.4782
va3design.com

The undersigned has reviewed and takes responsibility for this design and has the qualifications and meets the requirements set out in the Ontario Building Code to be a Designer.

qualification information	name	registration information
Wellington Jno-Baptiste	VA3 Design Inc.	25591 BCIN 42658

signature

Contractor must verify all dimensions on the job and report any discrepancy to the Designer before proceeding with the work. All drawings and specifications are instruments of service and are the property of the Designer which must be returned at the completion of the work. Drawings are not to be scaled.

no.	description	date	by
9	.	.	.
8	.	.	.
7	.	.	.
6	REVISED AS PER ENG'S COMMENTS	APR 08-22	RC
5	REVISED AS PER FLOOR LAYOUTS	APR 05-22	RC
4	10' GROUND FLOOR	JLU 22-21	KL
3	ADDED OPT. 9' BASEMENT	JUL 22-21	KL
2	REVISED AS PER ENG'S COMMENTS	FEB 07-18	RC
1	ISSUED FOR CLIENT REVIEW	.	.

All drawings specifications, related documents and design are the copyright property of VA3 DESIGN. Reproduction of this property in whole or in part is strictly prohibited without VA3 DESIGN's written permission.

REFER TO FRONT ELEVATION FOR TYPICAL NOTES	R.W.L. AS REQUIRED & AS PER MUNICIPALITY	SEE DETAIL S4 FOR 9'-0" BASEMENT COND

WALL AREA	1106.00 SQ. FT.
LIMITING DISTANCE	1.2 M (7%)
OPENING ALLOWED	77.42 SQ. FT.
OPENING PROVIDED	52.12 SQ. FT.(GLASS AREA ONLY)

LEFT SIDE ELEVATION 'B'

10' GROUND

LICENSED PROFESSIONAL ENGINEER
S. J. BOYD
90214198
PROVINCE OF ONTARIO

APR 8, 2022

It is the builder's complete responsibility to ensure that all plans submitted for approval fully comply with the Architectural Guidelines and all applicable regulations and requirements including zoning provisions and any provisions in the subdivision agreement. The Control Architect is not responsible in any way for examining or approving site (lotting) plans or working drawings with respect to any zoning or building code or permit matter or that any house can be properly built or located on its lot.

This is to certify that these plans comply with the applicable Architectural Design Guidelines approved by the Town of BRADFORD / WEST GWILLIMBURY.

S42-2
RIDEAU 2

project no. 16023

drawing no. **13**

BAYVIEW WELLINGTON

municipality: BRADFORD, ONT.

LEFT SIDE ELEVATION 'B'

project name: GREEN VALLEY EAST

date: FEBRUARY,2017

drawn by: WT

checked by: RC

scale: 3/16" = 1'-0"

file name: 16023-S42-2-10GRND

RICHARD - H:\ARCHIVE\WORKING\2016\16023.BW\Units\s2^\16023-S42-2-10GRND.dwg - Fri - Apr 8 2022 - 2:18 PM

VA3 DESIGN
255 Consumers Rd Suite 120
Toronto ON M2J 1R4
t 416.630.2255 f 416.630.4782
va3design.com

The undersigned has reviewed and takes responsibility for this design and has the qualifications and meets the requirements set out in the Ontario Building Code to be a designer.

qualification information	name	registration information
Wellington Jno-Baptiste	BCIN 25591	VA3 Design Inc. BCIN 42658

signature

Contractor must verify all dimensions on the job and report any discrepancy to the Designer before proceeding with the work. All drawings are the property of the Designer and are the property of the Designer which must be returned at the completion of the work. Drawings are not to be scaled.

no.	description	date	by
9	.	.	.
8	.	.	.
7	.	.	.
6	REVISED AS PER ENG'S COMMENTS	APR. 08-22	RC
5	REVISED AS PER FLOOR LAYOUTS	APR. 05-22	RC
4	10' GROUND FLOOR	JLU 22-21	KL
3	ADDED OPT. 9' BASEMENT	JUL 22-21	KL
2	REVISED AS PER ENG'S COMMENTS	FEB 07-18	RC
1	ISSUED FOR CLIENT REVIEW	.	.

All drawings specifications, related documents and design are the copyright property of VA3 DESIGN. Reproduction of this property in whole or in part is strictly prohibited without VA3 DESIGN's written permission.

REFER TO FRONT ELEVATION FOR TYPICAL NOTES	R.W.L. AS REQUIRED & AS PER MUNICIPALITY	SEE DETAIL S4 FOR 9'-0" BASEMENT COND

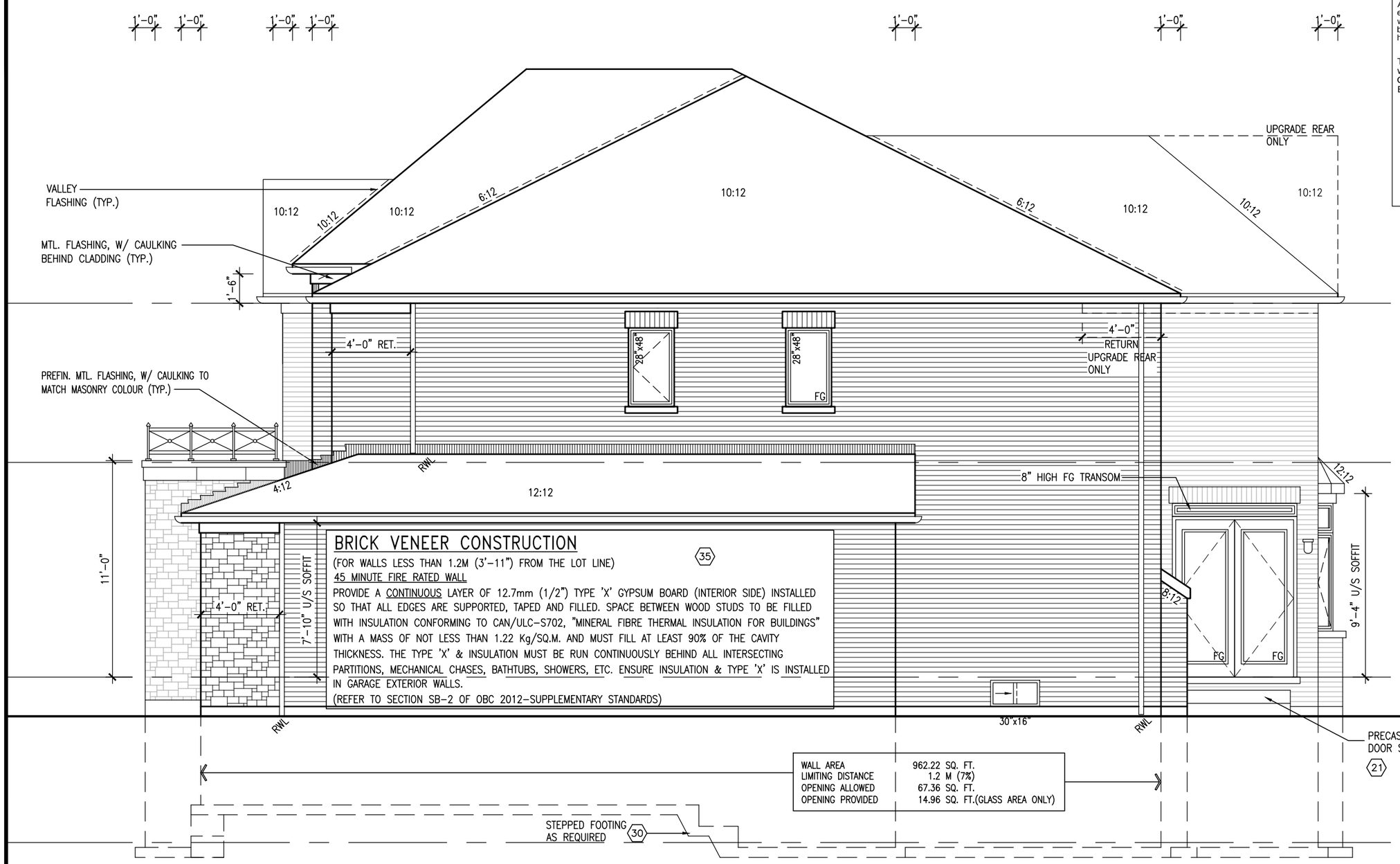

BRICK VENEER CONSTRUCTION

(FOR WALLS LESS THAN 1.2M (3'-11") FROM THE LOT LINE) 35

45 MINUTE FIRE RATED WALL

PROVIDE A CONTINUOUS LAYER OF 12.7mm (1/2") TYPE 'X' GYPSUM BOARD (INTERIOR SIDE) INSTALLED SO THAT ALL EDGES ARE SUPPORTED, TAPED AND FILLED. SPACE BETWEEN WOOD STUDS TO BE FILLED WITH INSULATION CONFORMING TO CAN/ULC-S702, "MINERAL FIBRE THERMAL INSULATION FOR BUILDINGS" WITH A MASS OF NOT LESS THAN 1.22 Kg/SQ.M. AND MUST FILL AT LEAST 90% OF THE CAVITY THICKNESS. THE TYPE 'X' & INSULATION MUST BE RUN CONTINUOUSLY BEHIND ALL INTERSECTING PARTITIONS, MECHANICAL CHASES, BATHTUBS, SHOWERS, ETC. ENSURE INSULATION & TYPE 'X' IS INSTALLED IN GARAGE EXTERIOR WALLS.

(REFER TO SECTION SB-2 OF OBC 2012-SUPPLEMENTARY STANDARDS)

WALL AREA	962.22 SQ. FT.
LIMITING DISTANCE	1.2 M (7%)
OPENING ALLOWED	67.36 SQ. FT.
OPENING PROVIDED	14.96 SQ. FT.(GLASS AREA ONLY)

RIGHT SIDE ELEVATION 'B'

10' GROUND

LICENSED PROFESSIONAL ENGINEER S. J. BOYD 90214198 PROVINCE OF ONTARIO

APR 8, 2022

It is the builder's complete responsibility to ensure that all plans submitted for approval fully comply with the Architectural Guidelines and all applicable regulations and requirements including zoning provisions and any provisions in the subdivision agreement. The Control Architect is not responsible in any way for examining or approving site (lotting) plans or working drawings with respect to any zoning or building code or permit matter or that any house can be properly built or located on its lot.

This is to certify that these plans comply with the applicable Architectural Design Guidelines approved by the Town of BRADFORD / WEST GWILLIMBURY.

S42-2
RIDEAU 2

project no. 16023

BAYVIEW WELLINGTON

municipality: BRADFORD, ONT.

project name: GREEN VALLEY EAST

RIGHT SIDE ELEVATION 'B'

drawing no. 14

date: FEBRUARY, 2017
drawn by: WT
checked by: RC
scale: 3/16" = 1'-0"
file name: 16023-S42-2-10GRND
RICHARD - H:\ARCHIVE\WORKING\2016\16023-BW\Units\42"\16023-S42-2-10GRND.dwg - Fri - Apr 8, 2022 - 2:18 PM

VA3 DESIGN
255 Consumers Rd Suite 120
Toronto ON M2J 1R4
t 416.630.2255 f 416.630.4782
va3design.com

The undersigned has reviewed and takes responsibility for this design and has the qualifications and meets the requirements set out in the Ontario Building Code to be a designer.

qualification information	signature	
Wellington Jno-Baptiste		25591
name	signature	BCIN
registration information		42658
VA3 Design Inc.		

Contractor must verify all dimensions on the job and report any discrepancy to the Designer before proceeding with the work. All drawings and specifications are instruments of service and the property of the Designer which must be returned at the completion of the work. Drawings are not to be scaled.

All drawings specifications, related documents and design are the copyright property of VA3 DESIGN. Reproduction of this property in whole or in part is strictly prohibited without VA3 DESIGN's written permission.

no.	description	date	by
9	.	.	.
8	.	.	.
7	.	.	.
6	REVISED AS PER ENG'S COMMENTS	APR 08-22	RC
5	REVISED AS PER FLOOR LAYOUTS	APR 05-22	RC
4	10' GROUND FLOOR	JLU 22-21	KL
3	ADDED OPT. 9' BASEMENT	JUL 22-21	KL
2	REVISED AS PER ENG'S COMMENTS	FEB 07-18	RC
1	ISSUED FOR CLIENT REVIEW	.	.

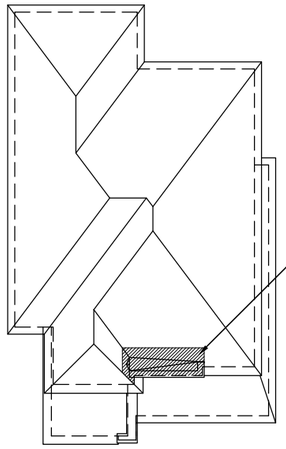

ROOF PLAN 'C'

NTS

ADD ICE+ WATER SHIELD ON TOP AND INSIDE WALLS OF PARAPET WALLS

R.W.L. AS REQUIRED & AS PER MUNICIPALITY

SEE DETAIL S4 FOR 9'-0" BASEMENT COND

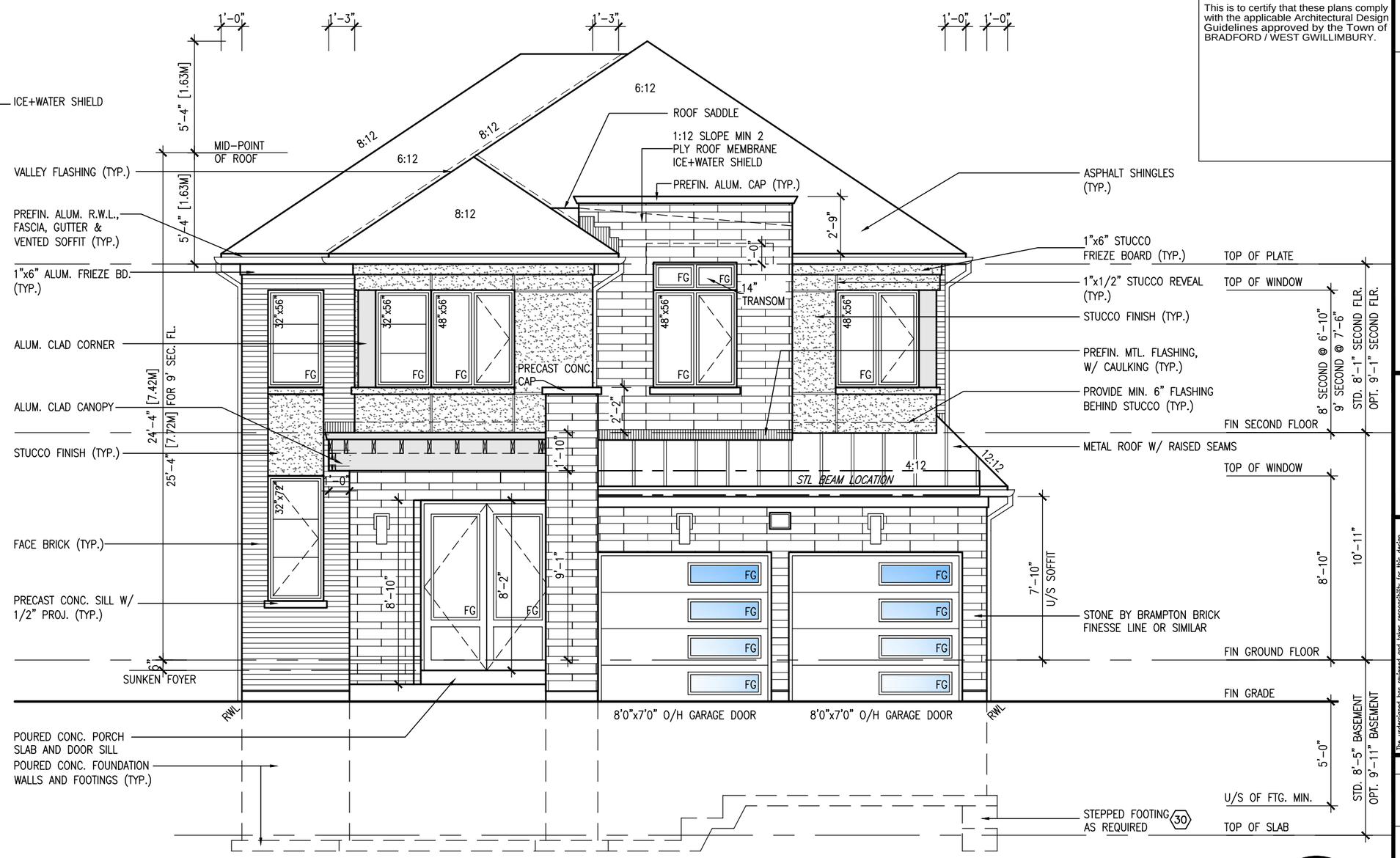

FRONT ELEVATION 'C'

10' GROUND

It is the builder's complete responsibility to ensure that all plans submitted for approval fully comply with the Architectural Guidelines and all applicable regulations and requirements including zoning provisions and any provisions in the subdivision agreement. The Control Architect is not responsible in any way for examining or approving site (lotting) plans or working drawings with respect to any zoning or building code or permit matter or that any house can be properly built or located on its lot.

This is to certify that these plans comply with the applicable Architectural Design Guidelines approved by the Town of BRADFORD / WEST GWILLIMBURY.

S.J. BOYD 90214198 LICENSED PROFESSIONAL ENGINEER PROVINCE OF ONTARIO

APR 8, 2022

S42-2
RIDEAU 2

project no. 16023

BAYVIEW WELLINGTON

municipality BRADFORD, ONT.

project name GREEN VALLEY EAST

FRONT ELEVATION 'C'

drawing no. 15

date FEBRUARY,2017 | checked by RC | scale 3/16" = 1'-0" | file name 16023-S42-2-10GRND

drawn by WT | RICHARD - H:\ARCHIVE\WORKING\2016\16023.BW\Units\42\16023-S42-2-10GRND.dwg - Fri - Apr 8 2022 - 2:18 PM

VA3 DESIGN
255 Consumers Rd Suite 120
Toronto ON M2J 1R4
t 416.630.2255 f 416.630.4782
va3design.com

The undersigned has reviewed and takes responsibility for this design and has the qualifications and meets the requirements set out in the Ontario Building Code to be a Designer.

qualification information	name	registration information
Wellington Jno-Baptiste	25591	BCIN
signature	VA3 Design Inc.	42658

Contractor must verify all dimensions on the job and report any discrepancy to the Designer before proceeding with the work. All dimensions are approximate and remain the property of the Designer which must be returned at the completion of the work. Drawings are not to be scaled.

no.	description	date	by
9	.	.	.
8	.	.	.
7	.	.	.
6	REVISED AS PER ENG'S COMMENTS	APR 08-22	RC
5	REVISED AS PER FLOOR LAYOUTS	APR 05-22	RC
4	10' GROUND FLOOR	JLU 22-21	KL
3	ADDED OPT. 9' BASEMENT	JUL 22-21	KL
2	REVISED AS PER ENG'S COMMENTS	FEB 07-18	RC
1	ISSUED FOR CLIENT REVIEW	.	.

All drawings specifications, related documents and design are the copyright property of VA3 DESIGN. Reproduction of this property in whole or in part is strictly prohibited without VA3 DESIGN's written permission.

ADD ICE+ WATER SHIELD ON TOP AND INSIDE WALLS OF PARAPET WALLS

REFER TO FRONT ELEVATION FOR TYPICAL NOTES	R.W.L. AS REQUIRED & AS PER MUNICIPALITY	SEE DETAIL S4 FOR 9'-0" BASEMENT COND

WALL AREA	1104.52 SQ. FT.
LIMITING DISTANCE	1.2 M (7%)
OPENING ALLOWED	77.32 SQ. FT.
OPENING PROVIDED	56.75 SQ. FT.(GLASS AREA ONLY)

LEFT SIDE ELEVATION 'C'

10' GROUND

LICENSED PROFESSIONAL ENGINEER
S. J. BOYD
90214198
PROVINCE OF ONTARIO
APR 8, 2022

It is the builder's complete responsibility to ensure that all plans submitted for approval fully comply with the Architectural Guidelines and all applicable regulations and requirements including zoning provisions and any provisions in the subdivision agreement. The Control Architect is not responsible in any way for examining or approving site (lotting) plans or working drawings with respect to any zoning or building code or permit matter or that any house can be properly built or located on its lot.

This is to certify that these plans comply with the applicable Architectural Design Guidelines approved by the Town of BRADFORD / WEST GWILLIMBURY.

S42-2
RIDEAU 2

project no. 16023

BAYVIEW WELLINGTON

municipality
BRADFORD, ONT.

project name
GREEN VALLEY EAST

LEFT SIDE ELEVATION 'C'

drawing no. **16**

date FEBRUARY,2017
drawn by WT
checked by RC
scale 3/16" = 1'-0"
file name 16023-S42-2-10GRND
RICHARD - H:\ARCHIVE\WORKING\2016\16023.BW\Units\s42\16023-S42-2-10GRND.dwg - Fri - Apr 8 2022 - 2:19 PM

VA3 DESIGN
255 Consumers Rd Suite 120
Toronto ON M2J 1R4
t 416.630.2255 f 416.630.4782
va3design.com

The undersigned has reviewed and takes responsibility for this design and has the qualifications and meets the requirements set out in the Ontario Building Code to be a Designer.

qualification information		
name	registration information	
Wellington Jno-Baptiste	25591	BCIN
signature	VA3 Design Inc.	42658

Contractor must verify all dimensions on the job and report any discrepancy to the Designer before proceeding with the work. All drawings and specifications, instruments of service, are the property of the Designer which must be returned at the completion of the work. Drawings are not to be scaled.

no.	description	date	by
9	.	.	.
8	.	.	.
7	.	.	.
6	REVISED AS PER ENG'S COMMENTS	APR 08-22	RC
5	REVISED AS PER FLOOR LAYOUTS	APR 05-22	RC
4	10' GROUND FLOOR	JLU 22-21	KL
3	ADDED OPT. 9' BASEMENT	JUL 22-21	KL
2	REVISED AS PER ENG'S COMMENTS	FEB 07-18	RC
1	ISSUED FOR CLIENT REVIEW	.	.

All drawings specifications, related documents and design are the copyright property of VA3 DESIGN. Reproduction of this property in whole or in part is strictly prohibited without VA3 DESIGN's written permission.

ADD ICE+ WATER SHIELD ON TOP AND INSIDE WALLS OF PARAPET WALLS

REFER TO FRONT ELEVATION FOR TYPICAL NOTES	R.W.L. AS REQUIRED & AS PER MUNICIPALITY	SEE DETAIL S4 FOR 9'-0" BASEMENT COND

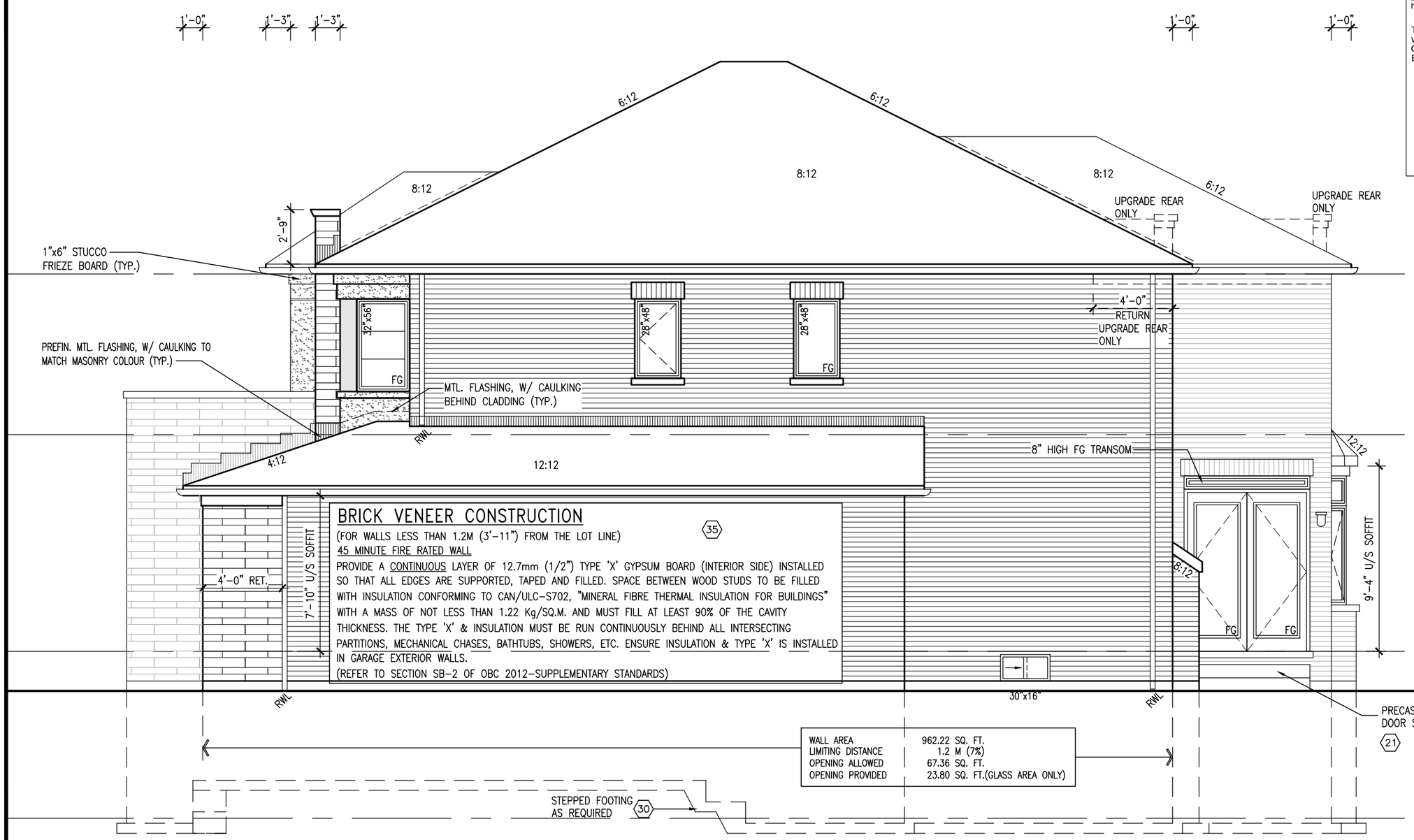

BRICK VENEER CONSTRUCTION

(FOR WALLS LESS THAN 1.2M (3'-11") FROM THE LOT LINE) 35

45 MINUTE FIRE RATED WALL

PROVIDE A CONTINUOUS LAYER OF 12.7mm (1/2") TYPE 'X' GYPSUM BOARD (INTERIOR SIDE) INSTALLED SO THAT ALL EDGES ARE SUPPORTED, TAPED AND FILLED. SPACE BETWEEN WOOD STUDS TO BE FILLED WITH INSULATION CONFORMING TO CAN/ULC-S702, "MINERAL FIBRE THERMAL INSULATION FOR BUILDINGS" WITH A MASS OF NOT LESS THAN 1.22 Kg/SQ.M. AND MUST FILL AT LEAST 90% OF THE CAVITY THICKNESS. THE TYPE 'X' & INSULATION MUST BE RUN CONTINUOUSLY BEHIND ALL INTERSECTING PARTITIONS, MECHANICAL CHASES, BATHTUBS, SHOWERS, ETC. ENSURE INSULATION & TYPE 'X' IS INSTALLED IN GARAGE EXTERIOR WALLS.

(REFER TO SECTION SB-2 OF OBC 2012-SUPPLEMENTARY STANDARDS)

WALL AREA	962.22 SQ. FT.
LIMITING DISTANCE	1.2 M (7%)
OPENING ALLOWED	67.36 SQ. FT.
OPENING PROVIDED	23.80 SQ. FT.(GLASS AREA ONLY)

RIGHT SIDE ELEVATION 'C'

10' GROUND

LICENSED PROFESSIONAL ENGINEER S. J. BOYD 90214198 PROVINCE OF ONTARIO

APR 8, 2022

It is the builder's complete responsibility to ensure that all plans submitted for approval fully comply with the Architectural Guidelines and all applicable regulations and requirements including zoning provisions and any provisions in the subdivision agreement. The Control Architect is not responsible in any way for examining or approving site (lotting) plans or working drawings with respect to any zoning or building code or permit matter or that any house can be properly built or located on its lot.

This is to certify that these plans comply with the applicable Architectural Design Guidelines approved by the Town of BRADFORD / WEST GWILLIMBURY.

S42-2
RIDEAU 2

project no. 16023

BAYVIEW WELLINGTON

municipality BRADFORD, ONT.

project name GREEN VALLEY EAST

RIGHT SIDE ELEVATION 'C'

drawing no. 17

date FEBRUARY,2017 | drawn by WT | checked by RC | scale 3/16" = 1'-0" | file name 16023-S42-2-10GRND

RICHARD - H:\ARCHIVE\WORKING\2016\16023.BW\Units\42\16023-S42-2-10GRND.dwg - Fri - Apr 8 2022 - 2:19 PM

VA3 DESIGN
255 Consumers Rd Suite 120
Toronto ON M2J 1R4
t 416.630.2255 f 416.630.4782
va3design.com

The undersigned has reviewed and takes responsibility for this design and has the qualifications and meets the requirements set out in the Ontario Building Code to be a designer.

qualification information	signature	
Wellington Jno-Baptiste		25591
name		BCIN
registration information		42658
VA3 Design Inc.		

Contractor must verify all dimensions on the job and report any discrepancy to the Designer before proceeding with the work. All drawings and specifications are instruments of service and are the property of the Designer which must be returned at the completion of the work. Drawings are not to be scaled.

no.	description	date	by
9	.	.	.
8	.	.	.
7	.	.	.
6	REVISED AS PER ENG'S COMMENTS	APR 08-22	RC
5	REVISED AS PER FLOOR LAYOUTS	APR 05-22	RC
4	10' GROUND FLOOR	JLU 22-21	KL
3	ADDED OPT. 9' BASEMENT	JUL 22-21	KL
2	REVISED AS PER ENG'S COMMENTS	FEB 07-18	RC
1	ISSUED FOR CLIENT REVIEW	.	.

All drawings specifications, related documents and design are the copyright property of VA3 DESIGN. Reproduction of this property in whole or in part is strictly prohibited without VA3 DESIGN's written permission.

SEE DETAIL S4 FOR 9'-0" BASEMENT COND

It is the builder's complete responsibility to ensure that all plans submitted for approval fully comply with the Architectural Guidelines and all applicable regulations and requirements including zoning provisions and any provisions in the subdivision agreement. The Control Architect is not responsible in any way for examining or approving site (lotting) plans or working drawings with respect to any zoning or building code or permit matter or that any house can be properly built or located on its lot.

This is to certify that these plans comply with the applicable Architectural Design Guidelines approved by the Town of BRADFORD / WEST GWILLIMBURY.

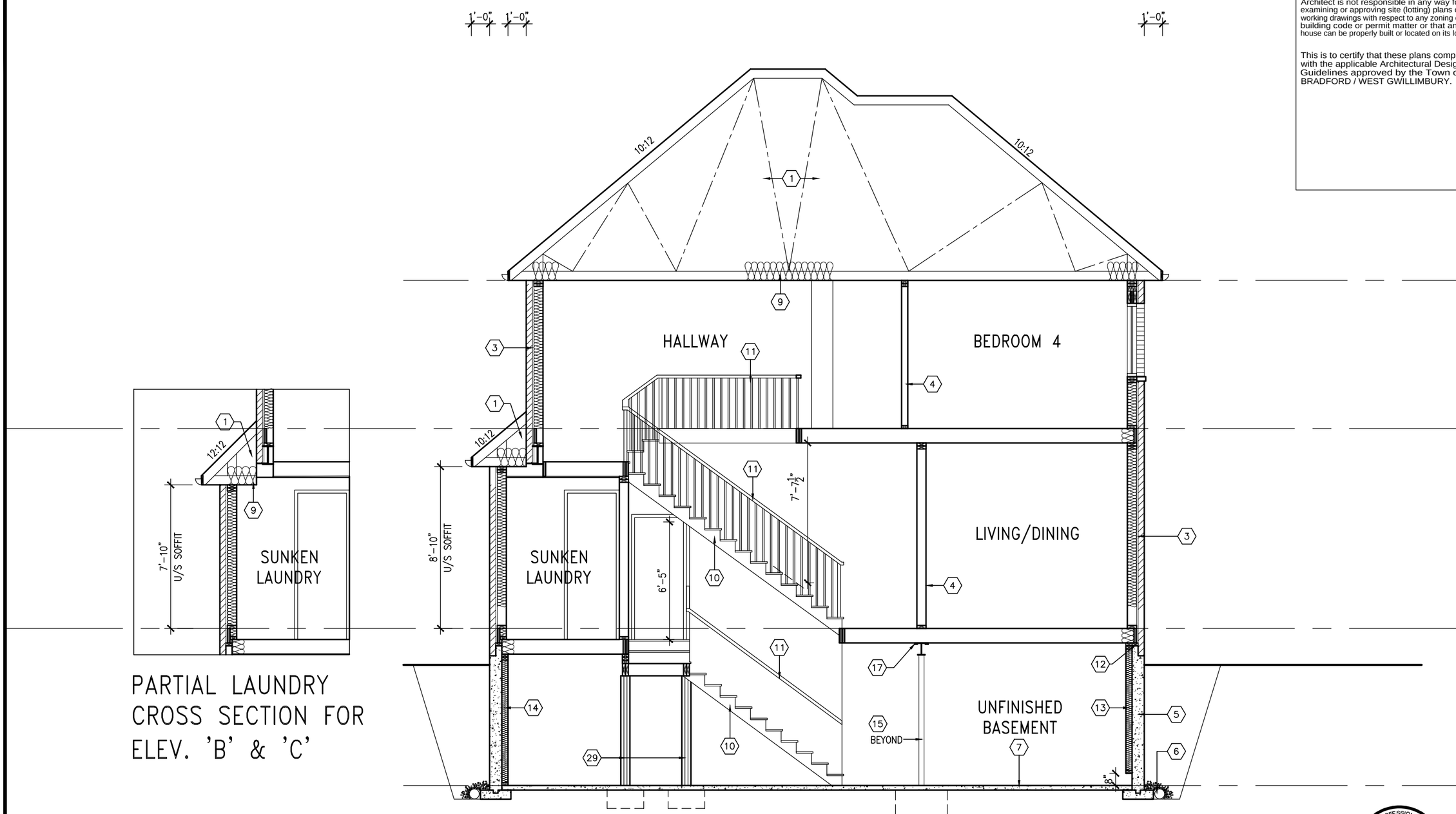

PARTIAL LAUNDRY CROSS SECTION FOR ELEV. 'B' & 'C'

CROSS SECTION A-A

10' GROUND

LICENSED PROFESSIONAL ENGINEER S. J. BOYD 90214198 PROVINCE OF ONTARIO

APR 8, 2022

BAYVIEW WELLINGTON

project name: GREEN VALLEY EAST

municipality: BRADFORD, ONT.

date: FEBRUARY,2017

drawn by: WT

checked by: RC

scale: 3/16" = 1'-0"

RICHARD - H:\ARCHIVE\WORKING\2016\16023.BW\Units\42"\16023-S42-2-10GRND.dwg - Fri - Apr 8 2022 - 2:19 PM

S42-2
RIDEAU 2

project no. 16023

drawing no. 18

CROSS SECTION A-A

file name: 16023-S42-2-10GRND

VA3 DESIGN
255 Consumers Rd Suite 120
Toronto ON M2J 1R4
t 416.630.2255 f 416.630.4782
va3design.com

The undersigned has reviewed and takes responsibility for this design and has the qualifications and meets the requirements set out in the Ontario Building Code to be a Designer.

qualification information: Wellington Jno-Baptiste 25591 BCIN

registration information: VA3 Design Inc. 42658

signature

Contractor must verify all dimensions on the job and report any discrepancy to the Designer before proceeding with the work. All drawings and specifications remain the property of the Designer which must be returned at the completion of the work. Drawings are not to be scaled.

no.	description	date	by
9	.	.	.
8	.	.	.
7	.	.	.
6	REVISED AS PER ENG'S COMMENTS	APR 08-22	RC
5	REVISED AS PER FLOOR LAYOUTS	APR 05-22	RC
4	10' GROUND FLOOR	JUL 22-21	KL
3	ADDED OPT. 9' BASEMENT	JUL 22-21	KL
2	REVISED AS PER ENG'S COMMENTS	FEB 07-18	RC
1	ISSUED FOR CLIENT REVIEW	.	.

All drawings specifications, related documents and design are the copyright property of VA3 DESIGN. Reproduction of this property in whole or in part is strictly prohibited without VA3 DESIGN's written permission.

It is the builder's complete responsibility to ensure that all plans submitted for approval fully comply with the Architectural Guidelines and all applicable regulations and requirements including zoning provisions and any provisions in the subdivision agreement. The Control Architect is not responsible in any way for examining or approving site (lotting) plans or working drawings with respect to any zoning or building code or permit matter or that any house can be properly built or located on its lot.

This is to certify that these plans comply with the applicable Architectural Design Guidelines approved by the Town of BRADFORD / WEST GWILLIMBURY.

ROOF NOTE R1
2"x8" @ 16" O.C. P.T. W/ 2"x4" @ 12" O.C. DIAGONALLY CUT CROSS PURLINS W/ 5/8" EXTERIOR GRADE SHEATHING W/ SINGLE PLY ROOF MEMBRANE

NOTE: SPACE ALL FLOOR JOISTS @ 12" O.C. UNDER ALL CERAMIC TILE AREAS.

NOTE: ALL LVL'S SUPPORTING FLOOR LOADS ARE TO BE SPECIFIED BY FLOOR TRUSS MANUFACTURER.

NOTE: FLOOR FRAMING INFO REFER TO SHOP DRAWINGS FOR ALL TRUSS-JOIST INFORMATION AND DETAILS. UNLESS OTHERWISE NOTED.

OUTDOOR AIR INTAKE SEPARATION
ALL OUTDOOR AIR INTAKE VENTS TO BE SEPARATED A MINIMUM DISTANCE FROM SOURCES OF CONTAMINATION PER OBC. DIV. B- TABLE 6.2.3.12.
- KITCHEN EXHAUST. 3.0m
- DRIVEWAY, PARKING SPACE, ROAD. 1.5m
- SOLID FUEL APPLIANCE EXHAUST 3.0m

KIT-EX-NOTE-2020.dwg

NOTE J1: PROVIDE SOLID BLOCKING @ 24" O.C. WHERE FLOOR JOISTS ARE PARALLEL TO FOUNDATION WALL (TYP.)

NOTE:
REFER TO STANDARD PLAN FOR COMPLETE CONSTRUCTION NOTES.

15C
HSS 3 1/2" x 3 1/2"x1/4" C/W 4"x4"x1/4" TOP AND BOTTOM PLATES PROVIDE BASE PLATE 4 1/2"x10"x1/2" W/ (2) 1/2" DIA x12"x2" HOOK ANCHORS FIELD WELD COL TO BASE PLATE

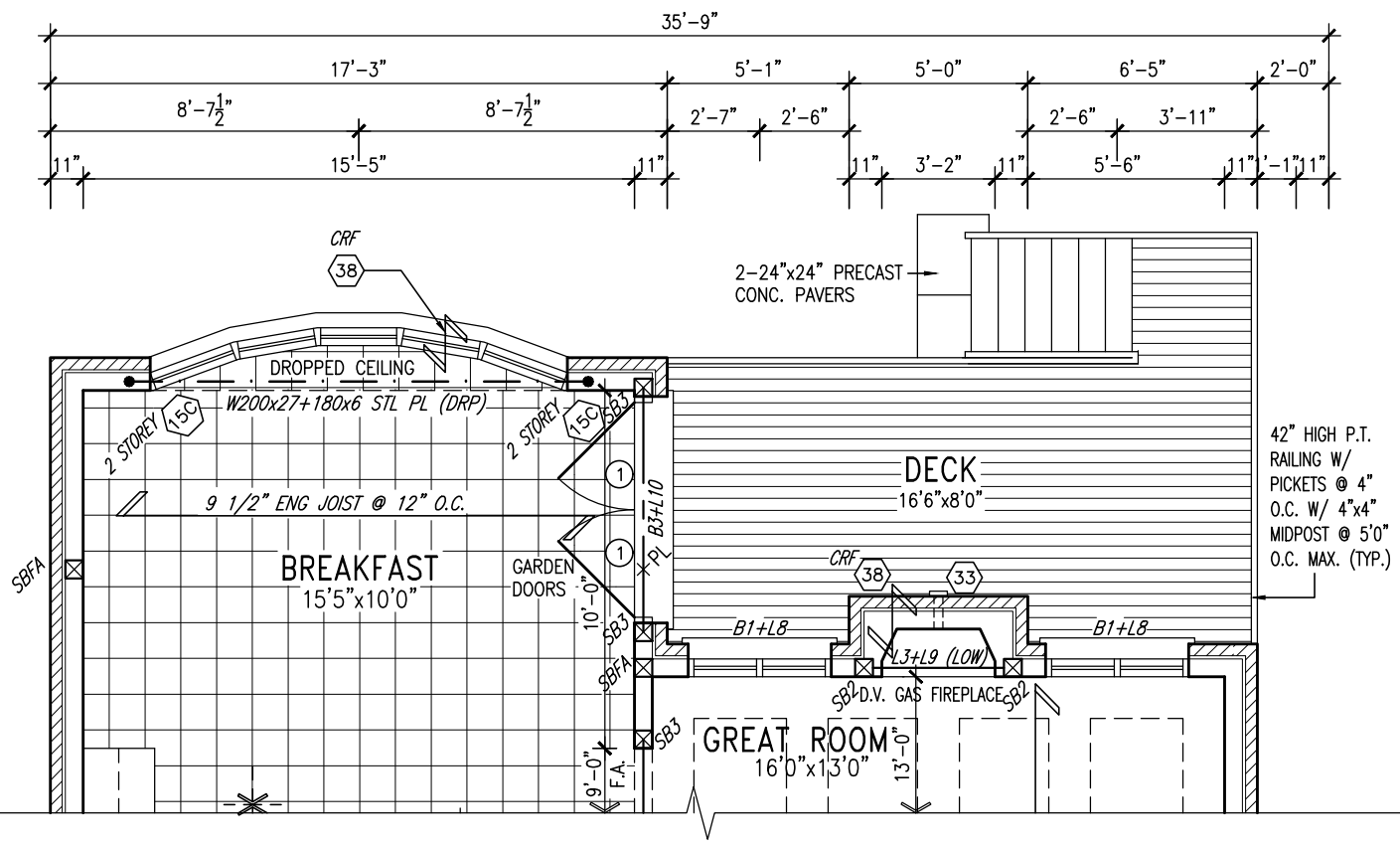

PART GRND FLOOR PLAN
9R OR MORE W.O.D. CONDITION

LICENSED PROFESSIONAL ENGINEER
S. J. BOYD
90214198
PROVINCE OF ONTARIO
APR 8, 2022

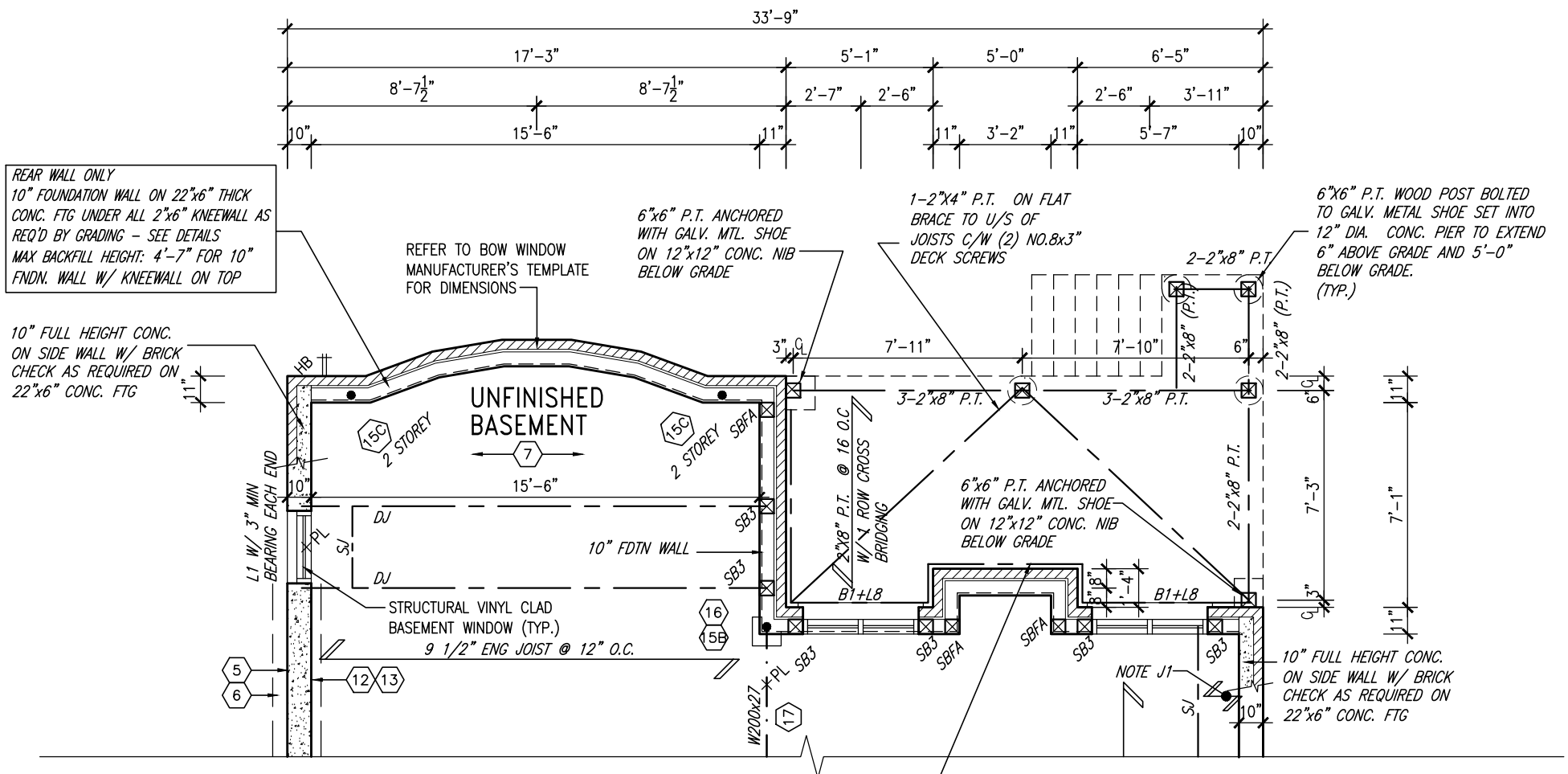

PART. BSMT. PLAN
9R OR MORE W.O.D. CONDITION

2-2"x8" P.T. DROPPED LEDGER FASTENED TO 2"x6" BLOCKING BETWEEN STUDS W/ 1/2" DIA. BOLTS @ 16" O.C. REFER TO DETAIL 1/S2

FOR 4-6 RISER
2-2"x8" P.T. DROPPED LEDGER FASTENED TO FTDN WALL W/ 1/2" DIA. x12" LONG HILTI ADHESIVE ANCHORS @ 16" O.C. REFER TO DETAIL 1/S2

no.	description	date	by
9	.	.	.
8	.	.	.
7	.	.	.
6	REVISED AS PER ENG'S COMMENTS	APR 08-22	RC
5	REVISED AS PER FLOOR LAYOUTS	APR 05-22	RC
4	10' GROUND FLOOR	JLU 22-21	KL
3	ADDED OPT. 9' BASEMENT	JUL 22-21	KL
2	REVISED AS PER ENG'S COMMENTS	FEB 07-18	RC
1	ISSUED FOR CLIENT REVIEW	.	.

The undersigned has reviewed and takes responsibility for this design and has the qualifications and meets the requirements set out in the Ontario Building Code to be a Designer.

qualification information
Wellington Jno-Baptiste — signature — 25591 BCIN
name / registration information
VA3 Design Inc. — 42658

Contractor must verify all dimensions on the job and report any discrepancy to the Designer before proceeding with the work. All drawings and specifications are instruments of service and the property of the Designer which must be returned at the completion of the work. Drawings are not to be scaled.

VA3 DESIGN
255 Consumers Rd Suite 120
Toronto ON M2J 1R4
t 416.630.2255 f 416.630.4782
va3design.com

BAYVIEW WELLINGTON

S42-2
RIDEAU 2

project name: GREEN VALLEY EAST
municipality: BRADFORD, ONT.
project no. 16023

date: FEBRUARY,2017
PART. FLOOR PLANS- W.O.D. COND.
drawing no. 19
drawn by: WT
checked by: RC
scale: 3/16" = 1'-0"
file name: 16023-S42-2-10GRND

RICHARD - H:\ARCHIVE\WORKING\2016\16023.BW\Units\42'\16023-S42-2-10GRND.dwg - Fri - Apr 8 2022 - 2:19 PM

All drawings specifications, related documents and design are the copyright property of VA3 DESIGN. Reproduction of this property in whole or in part is strictly prohibited without VA3 DESIGN's written permission.

UNINSULATED OPENINGS (PER OBC. SB-12,3.1.1(7))

S42-2 EL.A/A REAR UPG. WOD W/ 8' SEC	ENERGY EFFICIENCY – OBC SB12		
ELEVATION	WALL AREA S.F.	OPENING S.F.	PERCENTAGE
FRONT	738.89 S.F.	174.39 S.F.	23.60 %
LEFT SIDE	1095.50 S.F.	82.44 S.F.	7.53 %
RIGHT SIDE	1095.50 S.F.	77.94 S.F.	7.11 %
REAR	865.42 S.F.	198.06 S.F.	22.89 %
* OPENINGS OMITTED AS PER SB-12 3.1.1.9(4) MAX 19.9 S.F. REFER TO ELEVATION FOR LOCATION		0.00 S.F.	
TOTAL SQ. FT.	3795.31 S.F.	532.83 S.F.	14.04 %
TOTAL SQ. M.	352.59 S.M.	49.50 S.M.	14.04 %

UNINSULATED OPENINGS (PER OBC. SB-12,3.1.1(7))

S42-2 EL.B/B REAR UPG. WOD W/ 8' SEC	ENERGY EFFICIENCY – OBC SB12		
ELEVATION	WALL AREA S.F.	OPENING S.F.	PERCENTAGE
FRONT	745.92 S.F.	163.89 S.F.	21.97 %
LEFT SIDE	1106.00 S.F.	82.44 S.F.	7.45 %
RIGHT SIDE	1109.00 S.F.	77.94 S.F.	7.03 %
REAR	865.42 S.F.	198.06 S.F.	22.89 %
* OPENINGS OMITTED AS PER SB-12 3.1.1.9(4) MAX 19.9 S.F. REFER TO ELEVATION FOR LOCATION		0.00 S.F.	
TOTAL SQ. FT.	3826.34 S.F.	522.33 S.F.	13.65 %
TOTAL SQ. M.	355.48 S.M.	48.53 S.M.	13.65 %

UNINSULATED OPENINGS (PER OBC. SB-12,3.1.1(7))

S42-2 EL.C/C REAR UPG. WOD W/ 8' SEC	ENERGY EFFICIENCY – OBC SB12		
ELEVATION	WALL AREA S.F.	OPENING S.F.	PERCENTAGE
FRONT	734.49 S.F.	178.44 S.F.	24.29 %
LEFT SIDE	1104.52 S.F.	82.89 S.F.	7.50 %
RIGHT SIDE	1100.75 S.F.	90.44 S.F.	8.22 %
REAR	865.42 S.F.	198.06 S.F.	22.89 %
* OPENINGS OMITTED AS PER SB-12 3.1.1.9(4) MAX 19.9 S.F. REFER TO ELEVATION FOR LOCATION		0.00 S.F.	
TOTAL SQ. FT.	3805.18 S.F.	549.83 S.F.	14.45 %
TOTAL SQ. M.	353.51 S.M.	51.08 S.M.	14.45 %

LICENSED PROFESSIONAL ENGINEER
S. J. BOYD
90214198
PROVINCE OF ONTARIO
APR 8, 2022

REFER TO FRONT ELEVATION FOR TYPICAL NOTES	R.W.L. AS REQUIRED & AS PER MUNICIPALITY	SEE DETAIL S4 FOR 9'-0" BASEMENT COND

It is the builder's complete responsibility to ensure that all plans submitted for approval fully comply with the Architectural Guidelines and all applicable regulations and requirements including zoning provisions and any provisions in the subdivision agreement. The Control Architect is not responsible in any way for examining or approving site (lotting) plans or working drawings with respect to any zoning or building code or permit matter or that any house can be properly built or located on its lot.

This is to certify that these plans comply with the applicable Architectural Design Guidelines approved by the Town of BRADFORD / WEST GWILLIMBURY.

REAR ELEVATION 'A', 'B', 'C' W/ W.O.D. CONDITION

10' GROUND

BASEMENT WINDOW SIZES & TOP OF WINDOW

STD. BASEMENT
- 4R-8R USE 30"x24" VINYL CLAD STRUCTURAL STEEL FRAME BASEMENT WINDOWS

OPT. 9'-0" BASEMENT
- 9R-11R USE 40" DEEP CASEMENT WINDOWS @ 8'-4" TOP OF WINDOW
- 12R OR GREATER USE 40" DEEP CASEMENT WINDOWS @ 6'-10" TOP OF WINDOW

no.	description	date	by
9	.	.	.
8	.	.	.
7	.	.	.
6	REVISED AS PER ENG'S COMMENTS	APR 08-22	RC
5	REVISED AS PER FLOOR LAYOUTS	APR 05-22	RC
4	10' GROUND FLOOR	JLU 22-21	KL
3	ADDED OPT. 9' BASEMENT	JUL 22-21	KL
2	REVISED AS PER ENG'S COMMENTS	FEB 07-18	RC
1	ISSUED FOR CLIENT REVIEW	.	.

The undersigned has reviewed and takes responsibility for this design and has the qualifications and meets the requirements set out in the Ontario Building Code to be a Designer.

qualification information	name	registration information
Wellington Jno-Baptiste	VA3 Design Inc.	25591 BCIN 42658

signature

Contractor must verify all dimensions on the job and report any discrepancy to the Designer before proceeding with the work. All dimensions are approximate and instruments of service are the property of the Designer which must be returned at the completion of the work. Drawings are not to be scaled.

VA3 DESIGN
255 Consumers Rd Suite 120
Toronto ON M2J 1R4
t 416.630.2255 f 416.630.4782
va3design.com

BAYVIEW WELLINGTON

project name: GREEN VALLEY EAST
municipality: BRADFORD, ONT.

S42-2
RIDEAU 2

REAR ELEVATION 'A' – W.O.D. COND.

project no. 16023
drawing no. 20

date: FEBRUARY,2017
drawn by: WT
checked by: RC
scale: 3/16" = 1'-0"
file name: 16023-S42-2-10GRND
RICHARD – H:\ARCHIVE\WORKING\2016\16023.BW\Units\42\16023-S42-2-10GRND.dwg – Fri – Apr 8, 2022 – 2:19 PM

All drawings specifications, related documents and design are the copyright property of VA3 DESIGN. Reproduction of this property in whole or in part is strictly prohibited without VA3 DESIGN's written permission.

It is the builder's complete responsibility to ensure that all plans submitted for approval fully comply with the Architectural Guidelines and all applicable regulations and requirements including zoning provisions and any provisions in the subdivision agreement. The Control Architect is not responsible in any way for examining or approving site (lotting) plans or working drawings with respect to any zoning or building code or permit matter or that any house can be properly built or located on its lot.

This is to certify that these plans comply with the applicable Architectural Design Guidelines approved by the Town of BRADFORD / WEST GWILLIMBURY.

ROOF NOTE R1
2"x8" @ 16" O.C. P.T. W/ 2"x4" @ 12" O.C. DIAGONALLY CUT CROSS PURLINS W/ 5/8" EXTERIOR GRADE SHEATHING W/ SINGLE PLY ROOF MEMBRANE

NOTE: SPACE ALL FLOOR JOISTS @ 12" O.C. UNDER ALL CERAMIC TILE AREAS.

NOTE: ALL LVL'S SUPPORTING FLOOR LOADS ARE TO BE SPECIFIED BY FLOOR TRUSS MANUFACTURER.

NOTE: FLOOR FRAMING INFO REFER TO SHOP DRAWINGS FOR ALL TRUSS-JOIST INFORMATION AND DETAILS. UNLESS OTHERWISE NOTED.

OUTDOOR AIR INTAKE SEPARATION
ALL OUTDOOR AIR INTAKE VENTS TO BE SEPARATED A MINIMUM DISTANCE FROM SOURCES OF CONTAMINATION PER OBC. DIV. B- TABLE 6.2.3.12.
- KITCHEN EXHAUST. 3.0m
- DRIVEWAY, PARKING SPACE, ROAD. 1.5m
- SOLID FUEL APPLIANCE EXHAUST 3.0m

KIT-EX-NOTE-2020.dwg

NOTE J1: PROVIDE SOLID BLOCKING @ 24" O.C. WHERE FLOOR JOISTS ARE PARALLEL TO FOUNDATION WALL (TYP.)

NOTE:
REFER TO STANDARD PLAN FOR COMPLETE CONSTRUCTION NOTES.

(50)
HSS 3 1/2" x 3 1/2"x1/4" C/W 4"x4"x1/4" TOP AND BOTTOM PLATES PROVIDE BASE PLATE 4 1/2"x10"x1/2" W/ (2) 1/2" DIA x12"x2" HOOK ANCHORS FIELD WELD COL TO BASE PLATE

10' GROUND

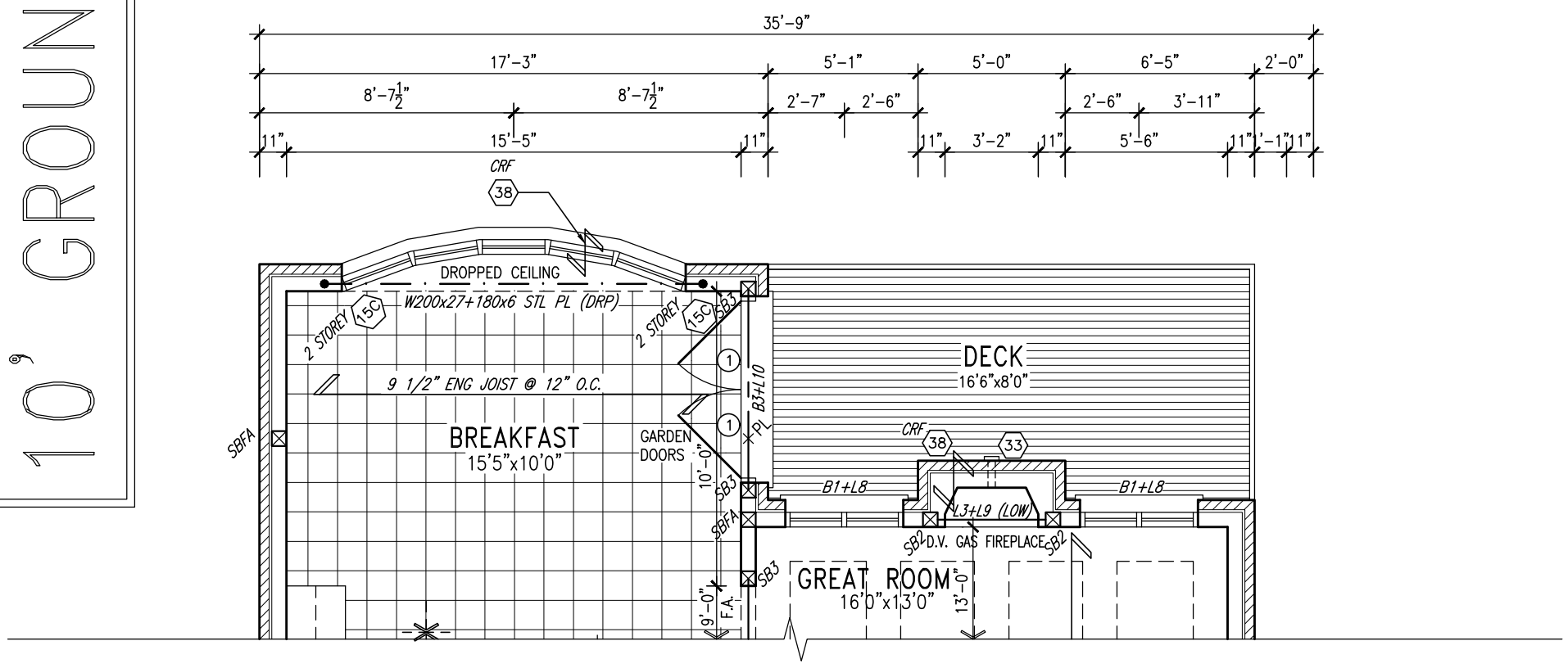

PART GRND FLOOR PLAN
W.O.B. CONDITION

LICENSED PROFESSIONAL ENGINEER
S. J. BOYD
90214198
PROVINCE OF ONTARIO
APR 8, 2022

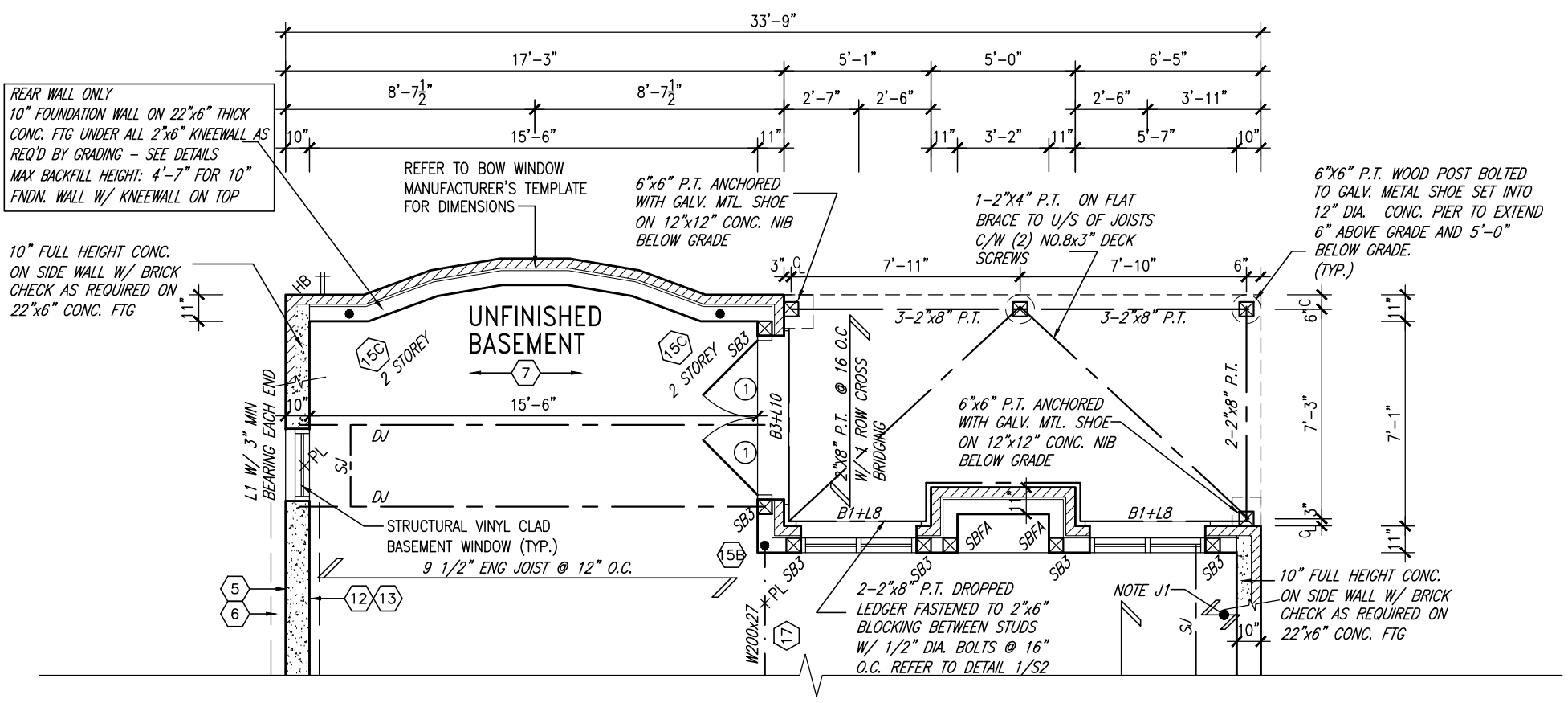

PART. BSMT. PLAN - W.O.B. CONDITION

no.	description	date	by
9	.	.	.
8	.	.	.
7	.	.	.
6	REVISED AS PER ENG'S COMMENTS	APR 08-22	RC
5	REVISED AS PER FLOOR LAYOUTS	APR 05-22	RC
4	10' GROUND FLOOR	JLU 22-21	KL
3	ADDED OPT. 9' BASEMENT	JUL 22-21	KL
2	REVISED AS PER ENG'S COMMENTS	FEB 07-18	RC
1	ISSUED FOR CLIENT REVIEW	.	.

The undersigned has reviewed and takes responsibility for this design and has the qualifications and meets the requirements set out in the Ontario Building Code to be a Designer.

qualification information		
name	signature	BCIN
Wellington Jno-Baptiste	JBaptiste	25591
registration information		
VA3 Design Inc.		42658

Contractor must verify all dimensions on the job and report any discrepancy to the Designer before proceeding with the work. All drawings and specifications are instruments of service and the property of the Designer which must be returned at the completion of the work. Drawings are not to be scaled.

VA3 DESIGN
255 Consumers Rd Suite 120
Toronto ON M2J 1R4
t 416.630.2255 f 416.630.4782
va3design.com

BAYVIEW WELLINGTON

S42-2
RIDEAU 2

project name	municipality	project no.
GREEN VALLEY EAST	BRADFORD, ONT.	16023

date			drawing no.
FEBRUARY,2017	PART. FLOOR PLAN - W.O.B. COND.		21
drawn by	checked by	scale	file name
WT	RC	3/16" = 1'-0"	16023-S42-2-10GRND

RICHARD - H:\ARCHIVE\WORKING\2016\16023.BW\Units\42"\16023-S42-2-10GRND.dwg - Fri - Apr 8 2022 - 2:19 PM

All drawings specifications, related documents and design are the copyright property of VA3 DESIGN. Reproduction of this property in whole or in part is strictly prohibited without VA3 DESIGN's written permission.

UNINSULATED OPENINGS (PER OBC. SB-12,3.1.1(7))

S42-2 EL.A/A REAR UPG. WOB W/ 8' SEC	ENERGY EFFICIENCY – OBC SB12		
ELEVATION	WALL AREA S.F.	OPENING S.F.	PERCENTAGE
FRONT	738.89 S.F.	174.39 S.F.	23.60 %
LEFT SIDE	1095.50 S.F.	82.44 S.F.	7.53 %
RIGHT SIDE	1227.31 S.F.	116.67 S.F.	9.51 %
REAR	963.85 S.F.	211.39 S.F.	21.93 %
* OPENINGS OMITTED AS PER SB-12 3.1.1.9(4) MAX 19.9 S.F. REFER TO ELEVATION FOR LOCATION		0.00 S.F.	
TOTAL SQ. FT.	4025.55 S.F.	584.89 S.F.	14.53 %
TOTAL SQ. M.	373.98 S.M.	54.34 S.M.	14.53 %

UNINSULATED OPENINGS (PER OBC. SB-12,3.1.1(7))

S42-2 EL.B/B REAR UPG. WOB W/ 8' SEC	ENERGY EFFICIENCY – OBC SB12		
ELEVATION	WALL AREA S.F.	OPENING S.F.	PERCENTAGE
FRONT	745.92 S.F.	163.89 S.F.	21.97 %
LEFT SIDE	1106.00 S.F.	82.44 S.F.	7.45 %
RIGHT SIDE	1240.81 S.F.	116.67 S.F.	9.40 %
REAR	963.85 S.F.	211.39 S.F.	21.93 %
* OPENINGS OMITTED AS PER SB-12 3.1.1.9(4) MAX 19.9 S.F. REFER TO ELEVATION FOR LOCATION		0.00 S.F.	
TOTAL SQ. FT.	4056.58 S.F.	574.39 S.F.	14.16 %
TOTAL SQ. M.	376.87 S.M.	~~53.36 S.M.~~	~~14.16 %~~

UNINSULATED OPENINGS (PER OBC. SB-12,3.1.1(7))

S42-2 EL.C/C REAR UPG. WOB W/ 8' SEC	ENERGY EFFICIENCY – OBC SB12		
ELEVATION	WALL AREA S.F.	OPENING S.F.	PERCENTAGE
FRONT	734.49 S.F.	178.44 S.F.	24.29 %
LEFT SIDE	1104.52 S.F.	82.89 S.F.	7.50 %
RIGHT SIDE	1232.56 S.F.	129.16 S.F.	10.48 %
REAR	963.85 S.F.	211.39 S.F.	21.93 %
* OPENINGS OMITTED AS PER SB-12 3.1.1.9(4) MAX 19.9 S.F. REFER TO ELEVATION FOR LOCATION		0.00 S.F.	
TOTAL SQ. FT.	4035.42 S.F.	601.88 S.F.	14.91 %
TOTAL SQ. M.	374.90 S.M.	55.92 S.M.	14.91 %

REFER TO FRONT ELEVATION FOR TYPICAL NOTES	R.W.L. AS REQUIRED & AS PER MUNICIPALITY	*SEE DETAIL S4 FOR 9'-0" BASEMENT COND*

It is the builder's complete responsibility to ensure that all plans submitted for approval fully comply with the Architectural Guidelines and all applicable regulations and requirements including zoning provisions and any provisions in the subdivision agreement. The Control Architect is not responsible in any way for examining or approving site (lotting) plans or working drawings with respect to any zoning or building code or permit matter or that any House can be properly built or located on its lot.

This is to certify that these plans comply with the applicable Architectural Design Guidelines approved by the Town of BRADFORD / WEST GWILLIMBURY.

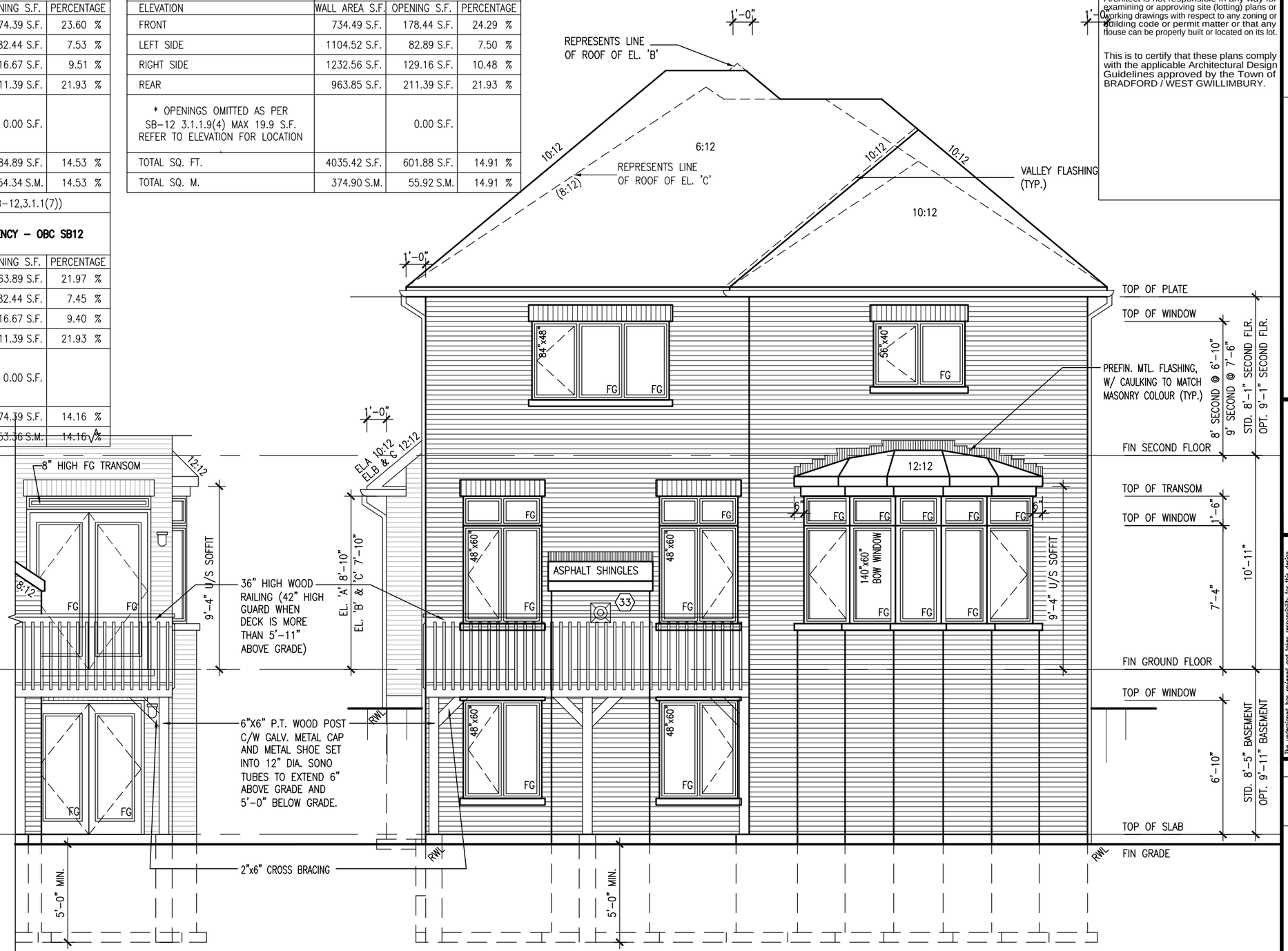

PARTIAL RIGHT SIDE ELEV.
W/ W.O.B. CONDITION

REAR ELEVATION 'A', 'B', 'C' W/ W.O.B. CONDITION

LICENSED PROFESSIONAL ENGINEER
S. J. BOYD
90214198
PROVINCE OF ONTARIO
APR 8, 2022

10' GROUND

S42-2
RIDEAU 2

project no. 16023
drawing no. 22

BAYVIEW WELLINGTON

municipality: BRADFORD, ONT.

REAR ELEVATION 'A' – W.O.B. COND.

project name: GREEN VALLEY EAST
date: FEBRUARY,2017
drawn by: WT
checked by: RC
scale: 3/16" = 1'-0"
file name: 16023-S42-2-10GRND
RICHARD – H:\ARCHIVE\WORKING\2016\16023.BW\Units\s42\16023-S42-2-10GRND.dwg – Fri – Apr 8, 2022 – 2:19 PM

VA3 DESIGN
255 Consumers Rd Suite 120
Toronto ON M2J 1R4
t 416.630.2255 f 416.630.4782
va3design.com

The undersigned has reviewed and takes responsibility for this design and has the qualifications and meets the requirements set out in the Ontario Building Code to be a Designer.

qualification information	signature
Wellington Jno-Baptiste	BCIN 25591
registration information	BCIN 42658
VA3 Design Inc.	

signature

Contractor must verify all dimensions on the job and report any discrepancy to the Designer before proceeding with the work. All drawings and specifications are instruments of service and are the property of the Designer which must be returned at the completion of the work. Drawings are not to be scaled.

no.	description	date	by
9	.	.	.
8	.	.	.
7	.	.	.
6	REVISED AS PER ENG'S COMMENTS	APR. 08-22	RC
5	REVISED AS PER FLOOR LAYOUTS	APR. 05-22	RC
4	10' GROUND FLOOR	JLU 22-21	KL
3	ADDED OPT. 9' BASEMENT	JUL 22-21	KL
2	REVISED AS PER ENG'S COMMENTS	FEB 07-18	RC
1	ISSUED FOR CLIENT REVIEW	.	.

All drawings specifications, related documents and design are the copyright property of VA3 DESIGN. Reproduction of this property in whole or in part is strictly prohibited without VA3 DESIGN's written permission.

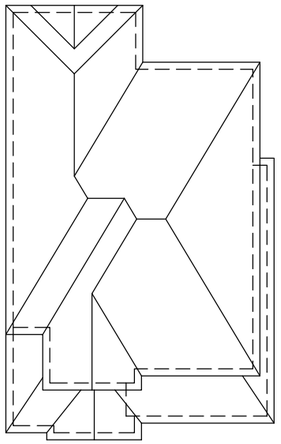

ROOF PLAN 'A'
(UPGRADED REAR)

LICENSED PROFESSIONAL ENGINEER
S. J. BOYD
90214198
PROVINCE OF ONTARIO
APR 8, 2022

REFER TO FRONT ELEVATION FOR TYPICAL NOTES	R.W.L. AS REQUIRED & AS PER MUNICIPALITY	SEE DETAIL S4 FOR 9'-0" BASEMENT COND

It is the builder's complete responsibility to ensure that all plans submitted for approval fully comply with the Architectural Guidelines and all applicable regulations and requirements including zoning provisions and any provisions in the subdivision agreement. The Control Architect is not responsible in any way for examining or approving site (lotting) plans or working drawings with respect to any zoning or building code or permit matter or that any house can be properly built or located on its lot.

This is to certify that these plans comply with the applicable Architectural Design Guidelines approved by the Town of BRADFORD / WEST GWILLIMBURY.

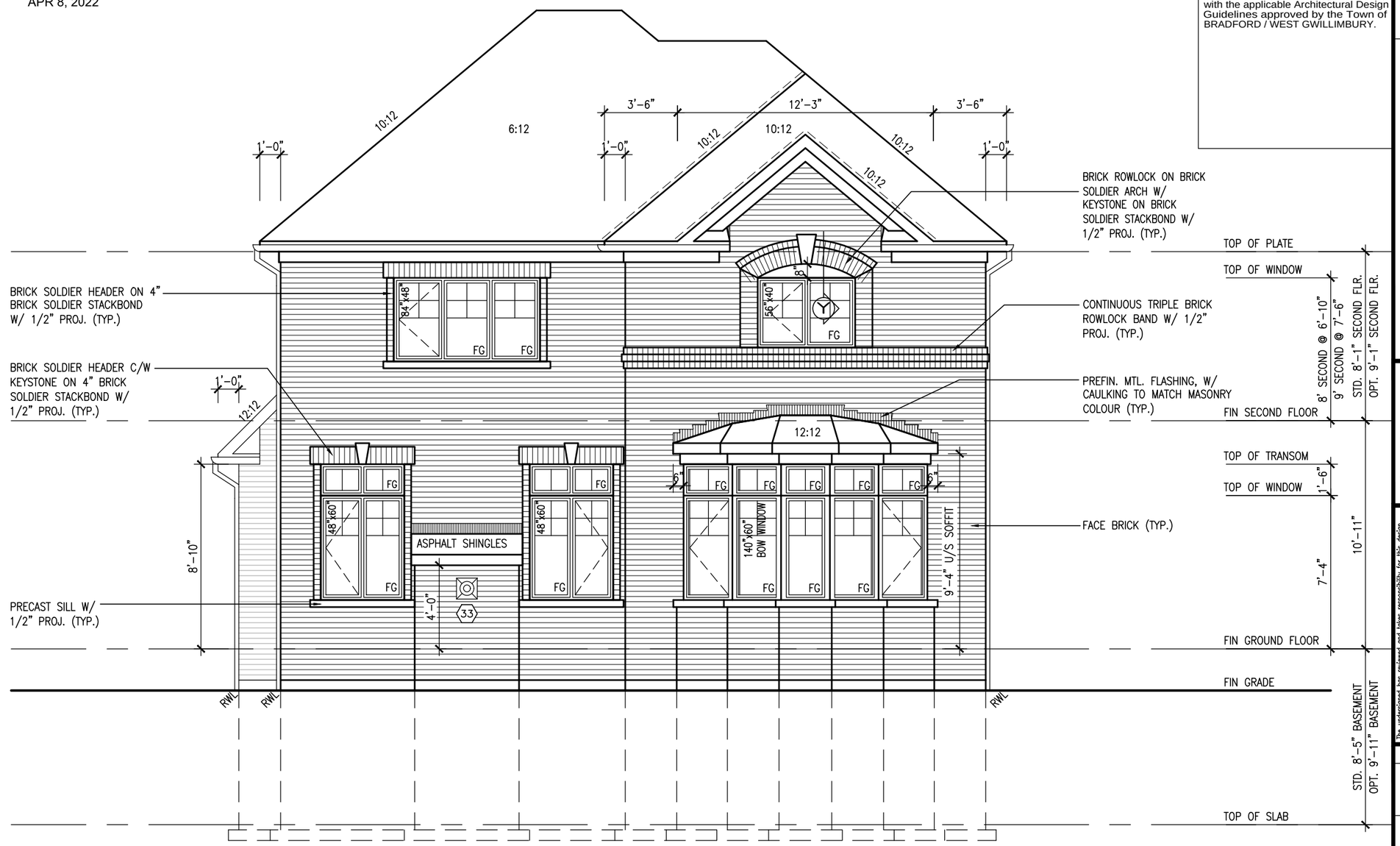

UPGRADED REAR ELEVATION 'A'

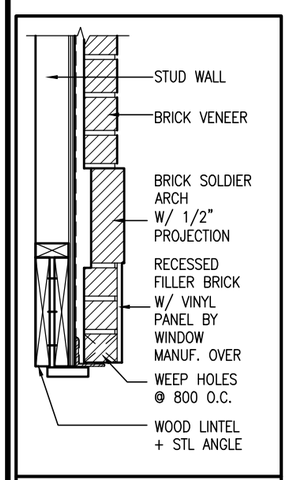

Y BRICK ARCH W/ VINYL PANEL BELOW DETAIL
NTS.

10' GROUND

S42-2
RIDEAU 2

project no. 16023
drawing no. 23

BAYVIEW WELLINGTON

municipality: BRADFORD, ONT.

UPGRADED REAR ELEVATION 'A'

project name: GREEN VALLEY EAST
date: FEBRUARY,2017
drawn by: WT
checked by: RC
scale: 3/16" = 1'-0"
file name: 16023-S42-2-10GRND

RICHARD - H:\ARCHIVE\WORKING\2016\16023.BW\Units\42"\16023-S42-2-10GRND.dwg - Fri - Apr 8 2022 - 2:19 PM

VA3 DESIGN
255 Consumers Rd Suite 120
Toronto ON M2J 1R4
t 416.630.2255 f 416.630.4782
va3design.com

The undersigned has reviewed and takes responsibility for this design and has the qualifications and meets the requirements set out in the Ontario Building Code to be a Designer.

qualification information	
name	Wellington Jno-Baptiste
registration information	VA3 Design Inc.
signature	
BCIN	25591
	42658

Contractor must verify all dimensions on the job and report any discrepancy to the Designer before proceeding with the work. All drawings or specifications are instruments of service and the property of the Designer which must be returned at the completion of the work. Drawings are not to be scaled.

no.	description	date	by
9	.	.	.
8	.	.	.
7	.	.	.
6	REVISED AS PER ENG'S COMMENTS	APR 08-22	RC
5	REVISED AS PER FLOOR LAYOUTS	APR 05-22	RC
4	10' GROUND FLOOR	JLU 22-21	KL
3	ADDED OPT. 9' BASEMENT	JUL 22-21	KL
2	REVISED AS PER ENG'S COMMENTS	FEB 07-18	RC
1	ISSUED FOR CLIENT REVIEW	.	.

All drawings specifications, related documents and design are the copyright property of VA3 DESIGN. Reproduction of this property in whole or in part is strictly prohibited without VA3 DESIGN's written permission.

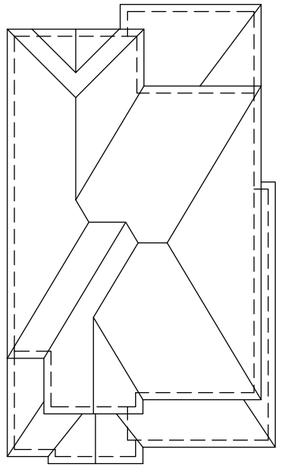

ROOF PLAN 'A'
(UPGRADED REAR w/ LOGGIA)

LICENSED PROFESSIONAL ENGINEER
S. J. BOYD
90214198
PROVINCE OF ONTARIO

APR 8, 2022

REFER TO FRONT ELEVATION FOR TYPICAL NOTES	R.W.L. AS REQUIRED & AS PER MUNICIPALITY	SEE DETAIL S4 FOR 9'-0" BASEMENT COND

It is the builder's complete responsibility to ensure that all plans submitted for approval fully comply with the Architectural Guidelines and all applicable regulations and requirements including zoning provisions and any provisions in the subdivision agreement. The Control Architect is not responsible in any way for examining or approving site (lotting) plans or working drawings with respect to any zoning or building code or permit matter or that any house can be properly built or located on its lot.

This is to certify that these plans comply with the applicable Architectural Design Guidelines approved by the Town of BRADFORD / WEST GWILLIMBURY.

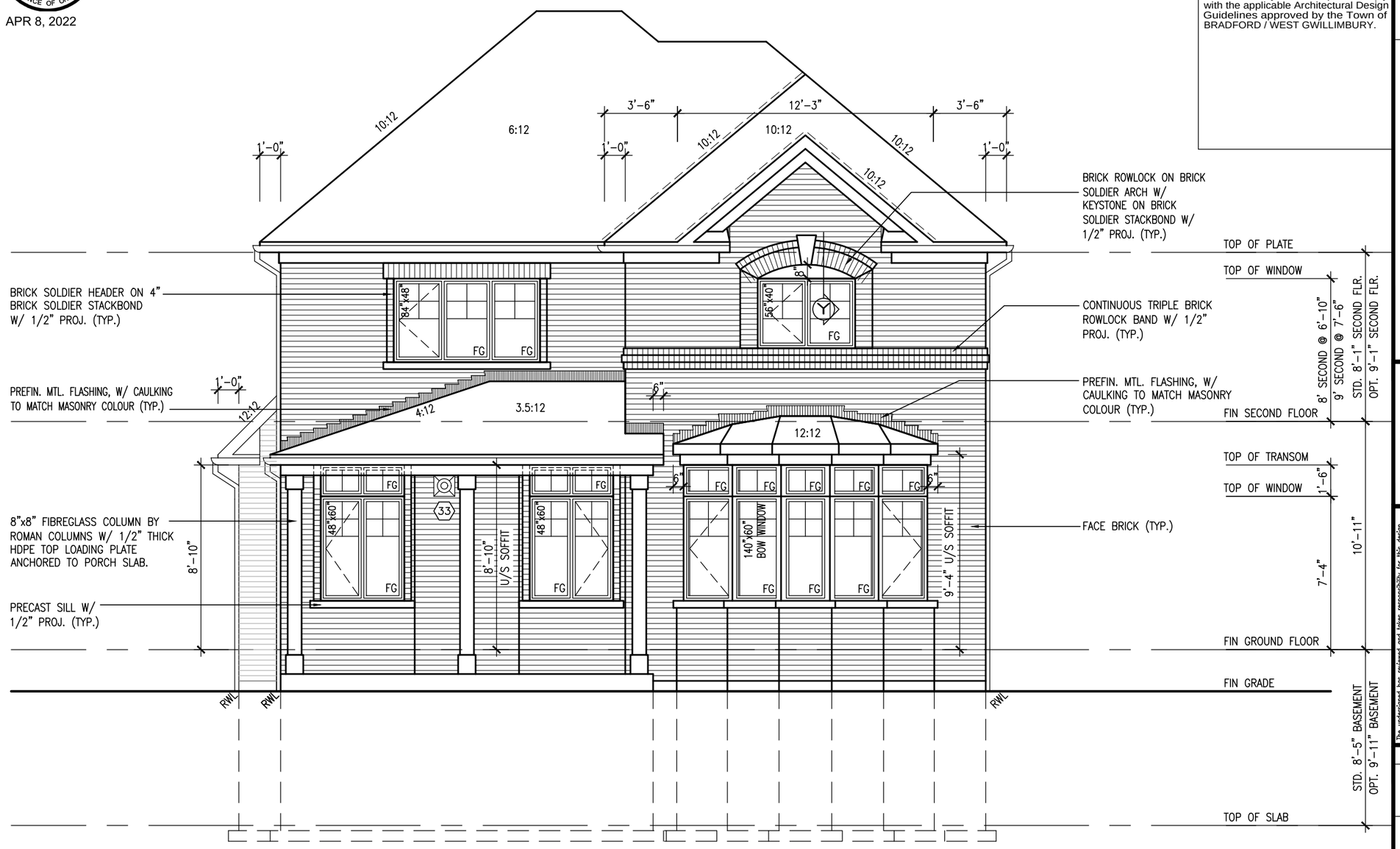

UPGRADED REAR ELEVATION 'A' (with OPT. LOGGIA)

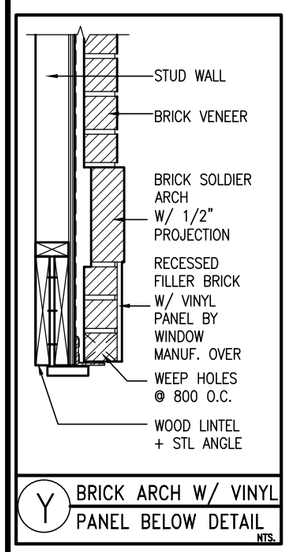

Y BRICK ARCH W/ VINYL PANEL BELOW DETAIL
NTS.

10' GROUND

S42-2
RIDEAU 2

project no. 16023

drawing no. 24

BAYVIEW WELLINGTON

municipality: BRADFORD, ONT.

project name: GREEN VALLEY EAST

UPGRADED REAR ELEVATION 'A' (w/ OPT. LOGGIA)

date: FEBRUARY,2017
drawn by: WT
checked by: RC
scale: 3/16" = 1'-0"
file name: 16023-S42-2-10GRND

RICHARD - H:\ARCHIVE\WORKING\2016\16023.BW\Units\s2^\16023-S42-2-10GRND.dwg - Fri - Apr 8, 2022 - 2:19 PM

VA3 DESIGN
255 Consumers Rd Suite 120
Toronto ON M2J 1R4
t 416.630.2255 f 416.630.4782
va3design.com

The undersigned has reviewed and takes responsibility for this design and has the qualifications and meets the requirements set out in the Ontario Building Code to be a Designer.

qualification information	name	registration information
	Wellington Jno-Baptiste	25591 BCIN
	VA3 Design Inc.	42658

signature

Contractor must verify all dimensions on the job and report any discrepancy to the Designer before proceeding with the work. All drawings and specifications are instruments of service and the property of the Designer which must be returned at the completion of the work. Drawings are not to be scaled.

no.	description	date	by
9	.	.	.
8	.	.	.
7	.	.	.
6	REVISED AS PER ENG'S COMMENTS	APR 08-22	RC
5	REVISED AS PER FLOOR LAYOUTS	APR 05-22	RC
4	10' GROUND FLOOR	JLU 22-21	KL
3	ADDED OPT. 9' BASEMENT	JUL 22-21	KL
2	REVISED AS PER ENG'S COMMENTS	FEB 07-18	RC
1	ISSUED FOR CLIENT REVIEW	.	.

All drawings specifications, related documents and design are the copyright property of VA3 DESIGN. Reproduction of this property in whole or in part is strictly prohibited without VA3 DESIGN's written permission.

REFER TO FRONT ELEVATION FOR TYPICAL NOTES	R.W.L. AS REQUIRED & AS PER MUNICIPALITY	SEE DETAIL S4 FOR 9'-0" BASEMENT COND

It is the builder's complete responsibility to ensure that all plans submitted for approval fully comply with the Architectural Guidelines and all applicable regulations and requirements including zoning provisions and any provisions in the subdivision agreement. The Control Architect is not responsible in any way for examining or approving site (lotting) plans or working drawings with respect to any zoning or building code or permit matter or that any house can be properly built or located on its lot.

This is to certify that these plans comply with the applicable Architectural Design Guidelines approved by the Town of BRADFORD / WEST GWILLIMBURY.

LICENSED PROFESSIONAL ENGINEER
S.J. BOYD
90214198
PROVINCE OF ONTARIO

APR 8, 2022

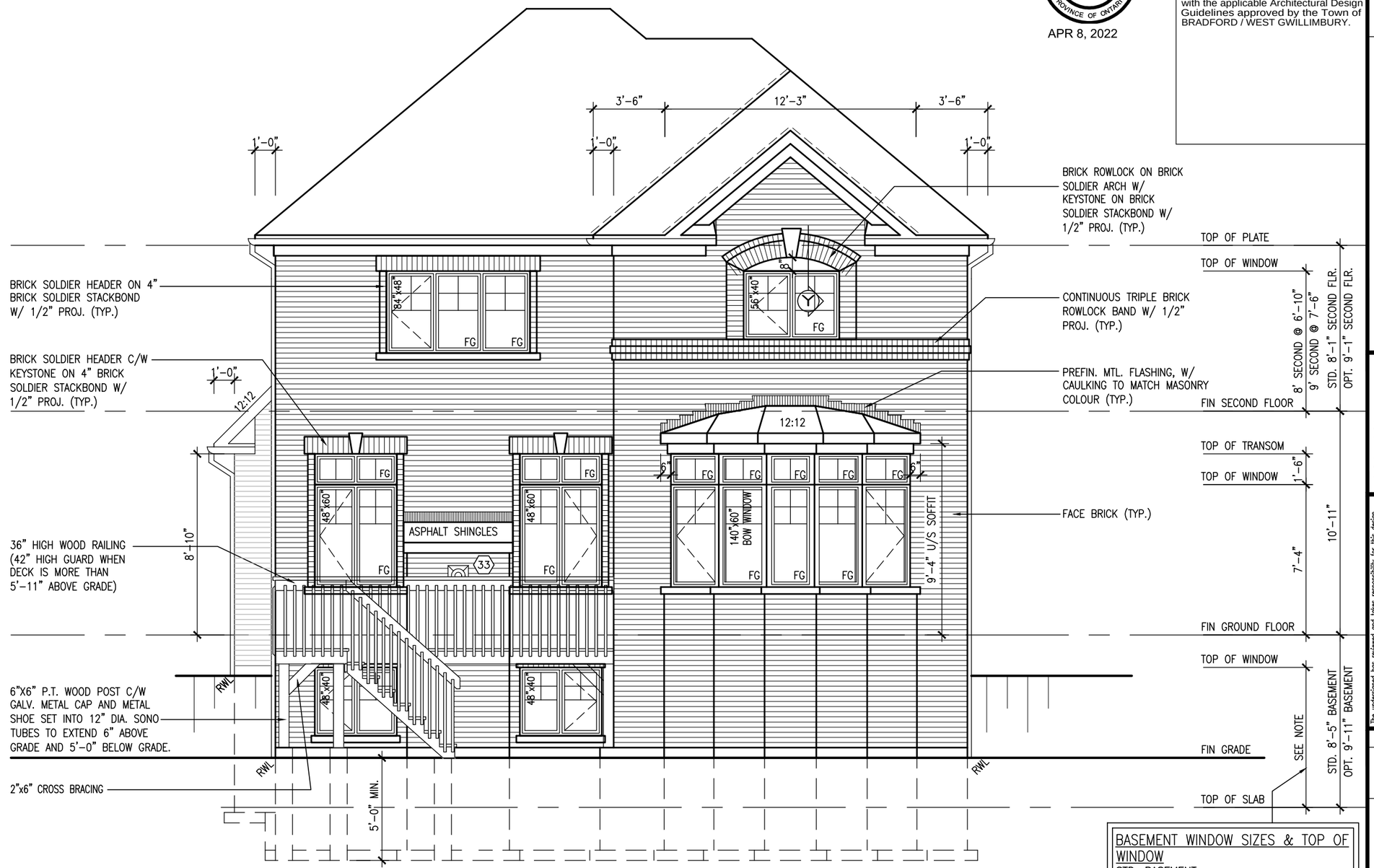

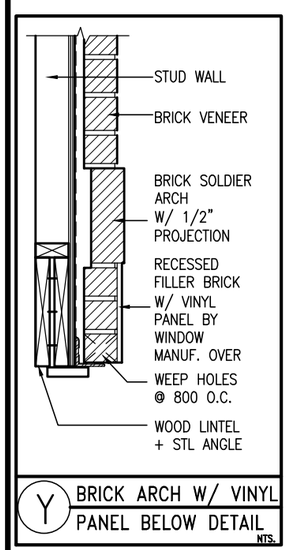

UPGRADED REAR ELEVATION 'A' W.O.D. COND.

10' GROUND

BASEMENT WINDOW SIZES & TOP OF WINDOW

STD. BASEMENT
- 4R-8R USE 30"x24" VINYL CLAD STRUCTURAL STEEL FRAME BASEMENT WINDOWS

OPT. 9'-0" BASEMENT
- 9R-11R USE 40" DEEP CASEMENT WINDOWS @ 8'-4" TOP OF WINDOW
- 12R OR GREATER USE 40" DEEP CASEMENT WINDOWS @ 6'-10" TOP OF WINDOW

no.	description	date	by
9	.	.	.
8	.	.	.
7	.	.	.
6	REVISED AS PER ENG'S COMMENTS	APR 08-22	RC
5	REVISED AS PER FLOOR LAYOUTS	APR 05-22	RC
4	10' GROUND FLOOR	JLU 22-21	KL
3	ADDED OPT. 9' BASEMENT	JUL 22-21	KL
2	REVISED AS PER ENG'S COMMENTS	FEB 07-18	RC
1	ISSUED FOR CLIENT REVIEW	.	.

The undersigned has reviewed and takes responsibility for this design and has the qualifications and meets the requirements set out in the Ontario Building Code to be a Designer.

qualification information

name	registration information
Wellington Jno-Baptiste	25591
VA3 Design Inc.	BCIN 42658

signature

Contractor must verify all dimensions on the job and report any discrepancy to the Designer before proceeding with the work. All dimensions on specifications and instruments of service are the property of the Designer which must be returned at the completion of the work. Drawings are not to be scaled.

VA3 DESIGN
255 Consumers Rd Suite 120
Toronto ON M2J 1R4
t 416.630.2255 f 416.630.4782
va3design.com

BAYVIEW WELLINGTON

project name: GREEN VALLEY EAST
municipality: BRADFORD, ONT.

S42-2
RIDEAU 2

UPGRADED REAR ELEVATION 'A'-W.O.D. COND.

date	checked by	scale	file name
FEBRUARY,2017	RC	3/16" = 1'-0"	16023-S42-2-10GRND

drawn by: WT

RICHARD - H:\ARCHIVE\WORKING\2016\16023.BW\Units\42"\16023-S42-2-10GRND.dwg - Fri - Apr 8 2022 - 2:19 PM

project no. 16023

drawing no. 25

All drawings specifications, related documents and design are the copyright property of VA3 DESIGN. Reproduction of this property in whole or in part is strictly prohibited without VA3 DESIGN's written permission.

REFER TO FRONT ELEVATION FOR TYPICAL NOTES	R.W.L. AS REQUIRED & AS PER MUNICIPALITY	SEE DETAIL S4 FOR 9'-0" BASEMENT COND

It is the builder's complete responsibility to ensure that all plans submitted for approval fully comply with the Architectural Guidelines and all applicable regulations and requirements including zoning provisions and any provisions in the subdivision agreement. The Control Architect is not responsible in any way for examining or approving site (lotting) plans or working drawings with respect to any zoning or building code or permit matter or that any house can be properly built or located on its lot.

This is to certify that these plans comply with the applicable Architectural Design Guidelines approved by the Town of BRADFORD / WEST GWILLIMBURY.

LICENSED PROFESSIONAL ENGINEER S. J. BOYD 90214198 PROVINCE OF ONTARIO

APR 8, 2022

UPGRADED RIGHT SIDE ELEV. 'A'
W.O.B. CONDITION

UPGRADED REAR ELEVATION 'A' W/ W.O.B. CONDITION

BAYVIEW WELLINGTON

municipality: BRADFORD, ONT.

S42-2
RIDEAU 2

project no. 16023

drawing no. 26

project name: GREEN VALLEY EAST

UPGRADED REAR ELEVATION 'A'-W.O.B. COND.

date: FEBRUARY,2017 | checked by: RC | scale: 3/16" = 1'-0" | file name: 16023-S42-2-10GRND

drawn by: WT

RICHARD - H:\ARCHIVE\WORKING\2016\16023.BW\Uinta\42\16023-S42-2-10GRND.dwg - Fri - Apr 8, 2022 - 2:19 PM

VA3 DESIGN
255 Consumers Rd Suite 120
Toronto ON M2J 1R4
t 416.630.2255 f 416.630.4782
va3design.com

The undersigned has reviewed and takes responsibility for this design and has the qualifications and meets the requirements set out in the Ontario Building Code to be a Designer.

qualification information	
Wellington Jno-Baptiste	25591
registration information	BCIN
VA3 Design Inc.	42658

signature

Contractor must verify all dimensions on the job and report any discrepancy to the Designer before proceeding with the work. All drawings or specifications and instruments of service are the property of the Designer which must be returned at the completion of the work. Drawings are not to be scaled.

no.	description	date	by
9	.	.	.
8	.	.	.
7	.	.	.
6	REVISED AS PER ENG'S COMMENTS	APR 08-22	RC
5	REVISED AS PER FLOOR LAYOUTS	APR 05-22	RC
4	10' GROUND FLOOR	JLU 22-21	KL
3	ADDED OPT. 9' BASEMENT	JUL 22-21	KL
2	REVISED AS PER ENG'S COMMENTS	FEB 07-18	RC
1	ISSUED FOR CLIENT REVIEW	.	.

All drawings specifications, related documents and design are the copyright property of VA3 DESIGN. Reproduction of this property in whole or in part is strictly prohibited without VA3 DESIGN's written permission.

REFER TO FRONT ELEVATION FOR TYPICAL NOTES	R.W.L. AS REQUIRED & AS PER MUNICIPALITY	SEE DETAIL S4 FOR 9'-0" BASEMENT COND

It is the builder's complete responsibility to ensure that all plans submitted for approval fully comply with the Architectural Guidelines and all applicable regulations and requirements including zoning provisions and any provisions in the subdivision agreement. The Control Architect is not responsible in any way for examining or approving site (lotting) plans or working drawings with respect to any zoning or building code or permit matter or that any house can be properly built or located on its lot.

This is to certify that these plans comply with the applicable Architectural Design Guidelines approved by the Town of BRADFORD / WEST GWILLIMBURY.

LICENSED PROFESSIONAL ENGINEER
S. J. BOYD
90214198
PROVINCE OF ONTARIO
APR 8, 2022

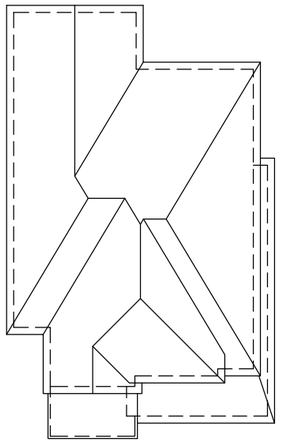

ROOF PLAN 'B'
(UPGRADED REAR)

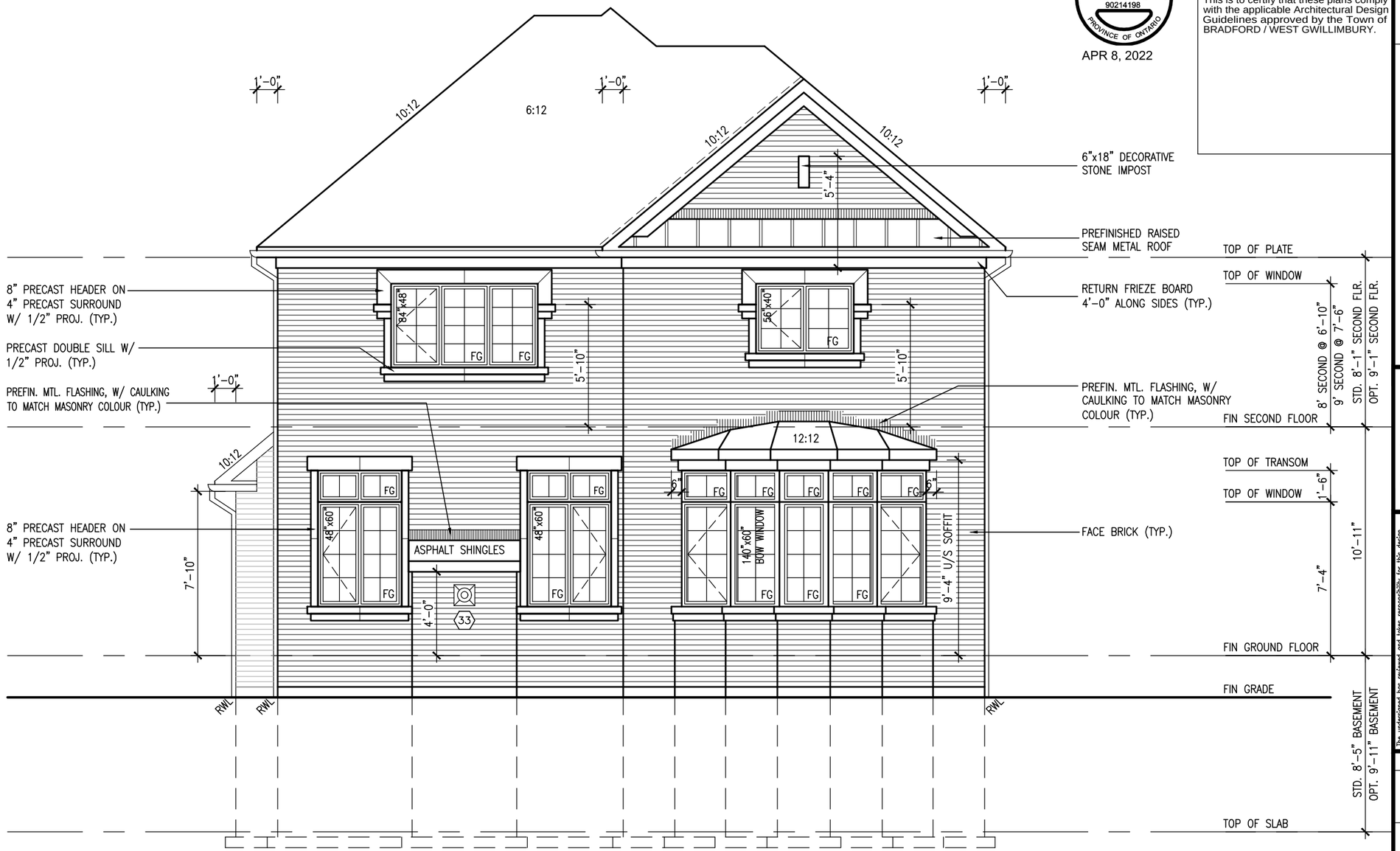

UPGRADED REAR ELEVATION 'B'

10' GROUND

S42-2
RIDEAU 2

project no. 16023
drawing no. 27

BAYVIEW WELLINGTON

municipality: BRADFORD, ONT.

UPGRADED REAR ELEVATION 'B'

project name: GREEN VALLEY EAST
date: FEBRUARY,2017
drawn by: WT
checked by: RC
scale: 3/16" = 1'-0"
file name: 16023-S42-2-10GRND
16023-S42-2-10GRND.dwg – Fri – Apr 8 2022 – 2:19 PM
RICHARD – H:\ARCHIVE\WORKING\2016\16023.BW\Units\42\16023-S42-2-10GRND

VA3 DESIGN
255 Consumers Rd Suite 120
Toronto ON M2J 1R4
t 416.630.2255 f 416.630.4782
va3design.com

The undersigned has reviewed and takes responsibility for this design and has the qualifications and meets the requirements set out in the Ontario Building Code to be a Designer.

qualification information: Wellington Jno-Baptiste — RC — 25591
registration information: VA3 Design Inc. — BCIN 42658

signature

Contractor must verify all dimensions on the job and report any discrepancy to the Designer before proceeding with the work. All dimensions over specifications, instruments of service and the property of the Designer which must be returned at the completion of the work. Drawings are not to be scaled.

no.	description	date	by
9	.	.	.
8	.	.	.
7	.	.	.
6	REVISED AS PER ENG'S COMMENTS	APR 08-22	RC
5	REVISED AS PER FLOOR LAYOUTS	APR 05-22	RC
4	10' GROUND FLOOR	JLU 22-21	KL
3	ADDED OPT. 9' BASEMENT	JUL 22-21	KL
2	REVISED AS PER ENG'S COMMENTS	FEB 07-18	RC
1	ISSUED FOR CLIENT REVIEW	.	.

All drawings specifications, related documents and design are the copyright property of VA3 DESIGN. Reproduction of this property in whole or in part is strictly prohibited without VA3 DESIGN's written permission.

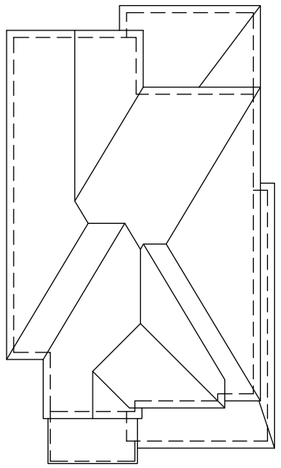

ROOF PLAN 'B'
(UPGRADED REAR w/ LOGGIA)

REFER TO FRONT ELEVATION FOR TYPICAL NOTES	R.W.L. AS REQUIRED & AS PER MUNICIPALITY	SEE DETAIL S4 FOR 9'-0" BASEMENT COND

It is the builder's complete responsibility to ensure that all plans submitted for approval fully comply with the Architectural Guidelines and all applicable regulations and requirements including zoning provisions and any provisions in the subdivision agreement. The Control Architect is not responsible in any way for examining or approving site (lotting) plans or working drawings with respect to any zoning or building code or permit matter or that any house can be properly built or located on its lot.

This is to certify that these plans comply with the applicable Architectural Design Guidelines approved by the Town of BRADFORD / WEST GWILLIMBURY.

LICENSED PROFESSIONAL ENGINEER
S. J. BOYD
90214198
PROVINCE OF ONTARIO
APR 8, 2022

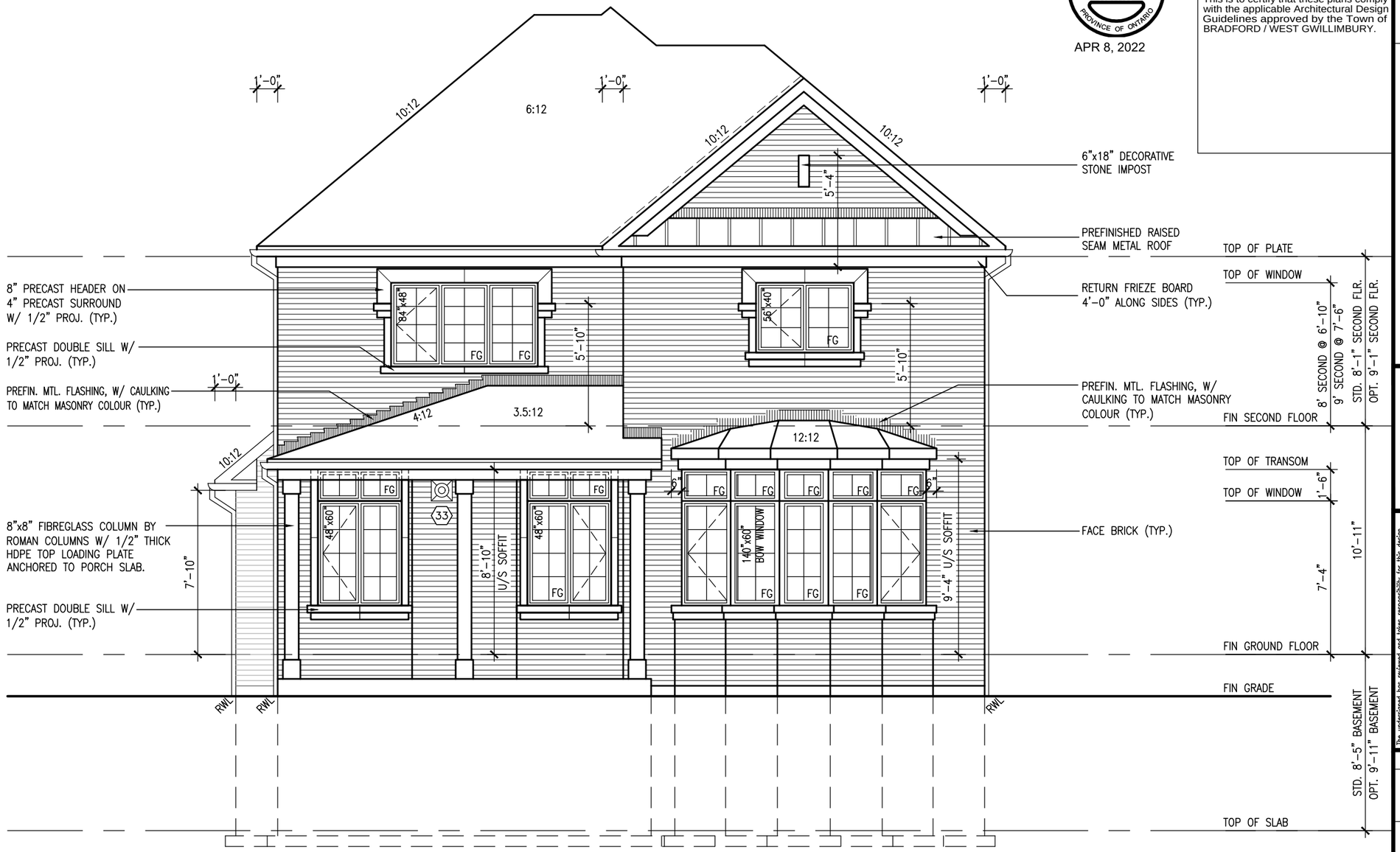

UPGRADED REAR ELEVATION 'B' (with OPT. LOGGIA)

10' GROUND

BAYVIEW WELLINGTON

municipality: BRADFORD, ONT.

S42-2
RIDEAU 2

project no. 16023

drawing no. 28

project name: GREEN VALLEY EAST

UPGRADED REAR ELEVATION 'B' (w/ OPT. LOGGIA)

date: FEBRUARY,2017 | drawn by: WT | checked by: RC | scale: 3/16" = 1'-0" | file name: 16023-S42-2-10GRND

RICHARD – H:\ARCHIVE\WORKING\2016\16023.BW\Units\42\16023-S42-2-10GRND.dwg – Fri – Apr 8, 2022 – 2:19 PM

VA3 DESIGN
255 Consumers Rd Suite 120
Toronto ON M2J 1R4
t 416.630.2255 f 416.630.4782
va3design.com

The undersigned has reviewed and takes responsibility for this design and has the qualifications and meets the requirements set out in the Ontario Building Code to be a Designer.

qualification information	
name	Wellington Jno-Baptiste
registration information	25591 BCIN
firm	VA3 Design Inc.
registration information	42658

signature

Contractor must verify all dimensions on the job and report any discrepancy to the Designer before proceeding with the work. All dimensions on specifications and instruments of service are the property of the Designer which must be returned at the completion of the work. Drawings are not to be scaled.

no.	description	date	by
9	.	.	.
8	.	.	.
7	.	.	.
6	REVISED AS PER ENG'S COMMENTS	APR 08-22	RC
5	REVISED AS PER FLOOR LAYOUTS	APR 05-22	RC
4	10' GROUND FLOOR	JLU 22-21	KL
3	ADDED OPT. 9' BASEMENT	JUL 22-21	KL
2	REVISED AS PER ENG'S COMMENTS	FEB 07-18	RC
1	ISSUED FOR CLIENT REVIEW	.	.

All drawings specifications, related documents and design are the copyright property of VA3 DESIGN. Reproduction of this property in whole or in part is strictly prohibited without VA3 DESIGN's written permission.

REFER TO FRONT ELEVATION FOR TYPICAL NOTES	R.W.L. AS REQUIRED & AS PER MUNICIPALITY	SEE DETAIL S4 FOR 9'-0" BASEMENT COND

It is the builder's complete responsibility to ensure that all plans submitted for approval fully comply with the Architectural Guidelines and all applicable regulations and requirements including zoning provisions and any provisions in the subdivision agreement. The Control Architect is not responsible in any way for examining or approving site (lotting) plans or working drawings with respect to any zoning or building code or permit matter or that any house can be properly built or located on its lot.

This is to certify that these plans comply with the applicable Architectural Design Guidelines approved by the Town of BRADFORD / WEST GWILLIMBURY.

LICENSED PROFESSIONAL ENGINEER
S. J. BOYD
90214198
PROVINCE OF ONTARIO

APR 8, 2022

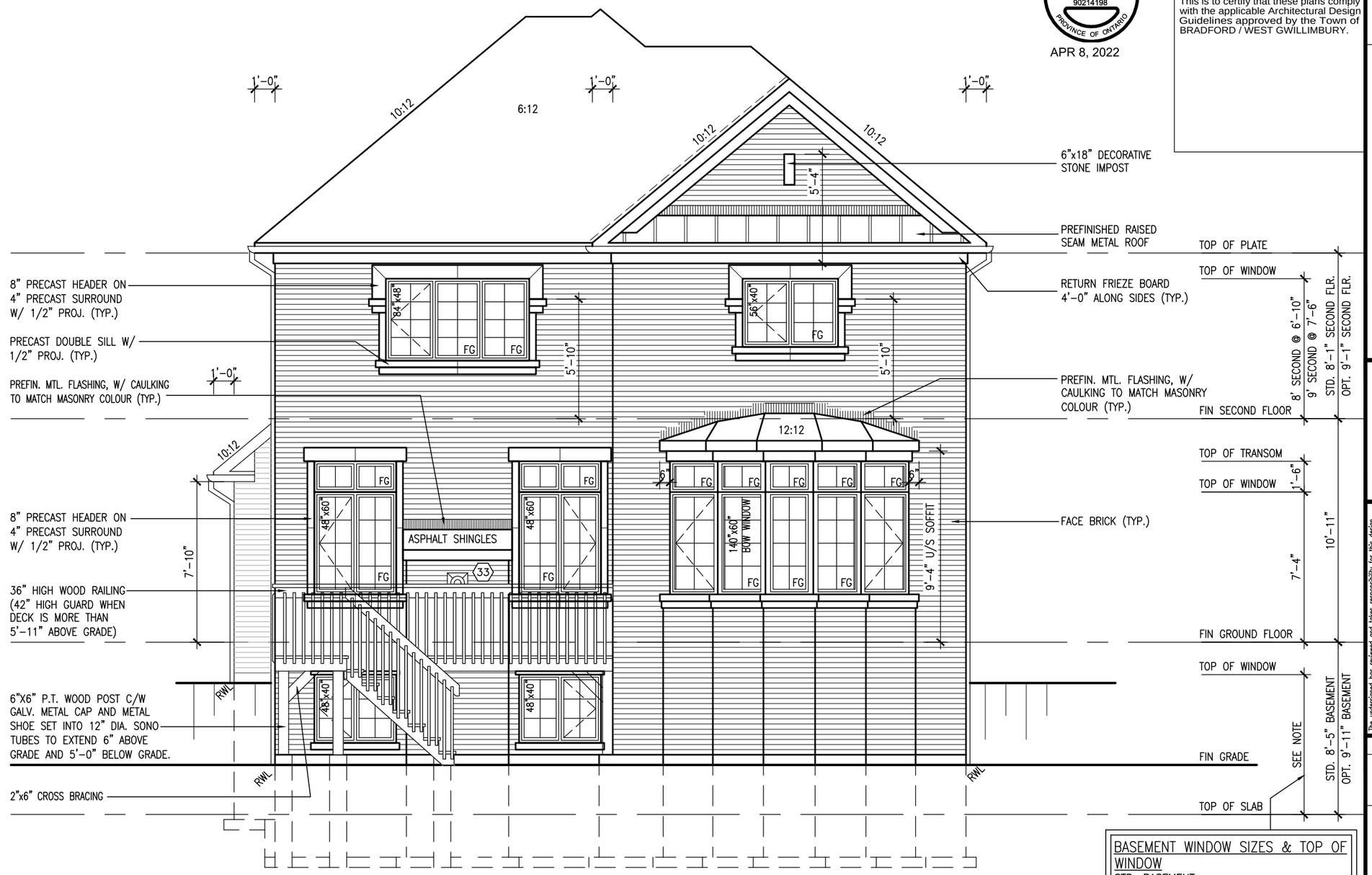

UPGRADED REAR ELEVATION 'B' W.O.D. COND.

10' GROUND

BASEMENT WINDOW SIZES & TOP OF WINDOW

STD. BASEMENT
- 4R-8R USE 30"x24" VINYL CLAD STRUCTURAL STEEL FRAME BASEMENT WINDOWS

OPT. 9'-0" BASEMENT
- 9R-11R USE 40" DEEP CASEMENT WINDOWS @ 8'-4" TOP OF WINDOW
- 12R OR GREATER USE 40" DEEP CASEMENT WINDOWS @ 6'-10" TOP OF WINDOW

S42-2
RIDEAU 2

project no. 16023

drawing no. 29

BAYVIEW WELLINGTON

municipality: BRADFORD, ONT.

UPGRADED REAR ELEVATION 'B' – W.O.D. COND.

project name: GREEN VALLEY EAST

date: FEBRUARY,2017 | drawn by: WT | checked by: RC | scale: 3/16" = 1'-0" | file name: 16023-S42-2-10GRND

RICHARD – H:\ARCHIVE\WORKING\2016\16023.BW\Units\42\16023-S42-2-10GRND.dwg – Fri – Apr 8, 2022 – 2:19 PM

VA3 DESIGN
255 Consumers Rd Suite 120
Toronto ON M2J 1R4
t 416.630.2255 f 416.630.4782
va3design.com

The undersigned has reviewed and takes responsibility for this design and has the qualifications and meets the requirements set out in the Ontario Building Code to be a Designer.

qualification information

name	registration information
Wellington Jno-Baptiste	25591 BCIN
VA3 Design Inc.	42658

signature

Contractor must verify all dimensions on the job and report any discrepancy to the Designer before proceeding with the work. All dimensions on specifications and instruments of service are the property of the Designer which must be returned at the completion of the work. Drawings are not to be scaled.

no.	description	date	by
9	.	.	.
8	.	.	.
7	.	.	.
6	REVISED AS PER ENG'S COMMENTS	APR 08-22	RC
5	REVISED AS PER FLOOR LAYOUTS	APR 05-22	RC
4	10' GROUND FLOOR	JLU 22-21	KL
3	ADDED OPT. 9' BASEMENT	JUL 22-21	KL
2	REVISED AS PER ENG'S COMMENTS	FEB 07-18	RC
1	ISSUED FOR CLIENT REVIEW	.	.

All drawings specifications, related documents and design are the copyright property of VA3 DESIGN. Reproduction of this property in whole or in part is strictly prohibited without VA3 DESIGN's written permission.

REFER TO FRONT ELEVATION FOR TYPICAL NOTES	R.W.L. AS REQUIRED & AS PER MUNICIPALITY	SEE DETAIL S4 FOR 9'-0" BASEMENT COND

LICENSED PROFESSIONAL ENGINEER
S. J. BOYD
90214198
PROVINCE OF ONTARIO
APR 8, 2022

It is the builder's complete responsibility to ensure that all plans submitted for approval fully comply with the Architectural Guidelines and all applicable regulations and requirements including zoning provisions and any provisions in the subdivision agreement. The Control Architect is not responsible in any way for examining or approving site (lotting) plans or working drawings with respect to any zoning or building code or permit matter or that any house can be properly built or located on its lot.

This is to certify that these plans comply with the applicable Architectural Design Guidelines approved by the Town of BRADFORD / WEST GWILLIMBURY.

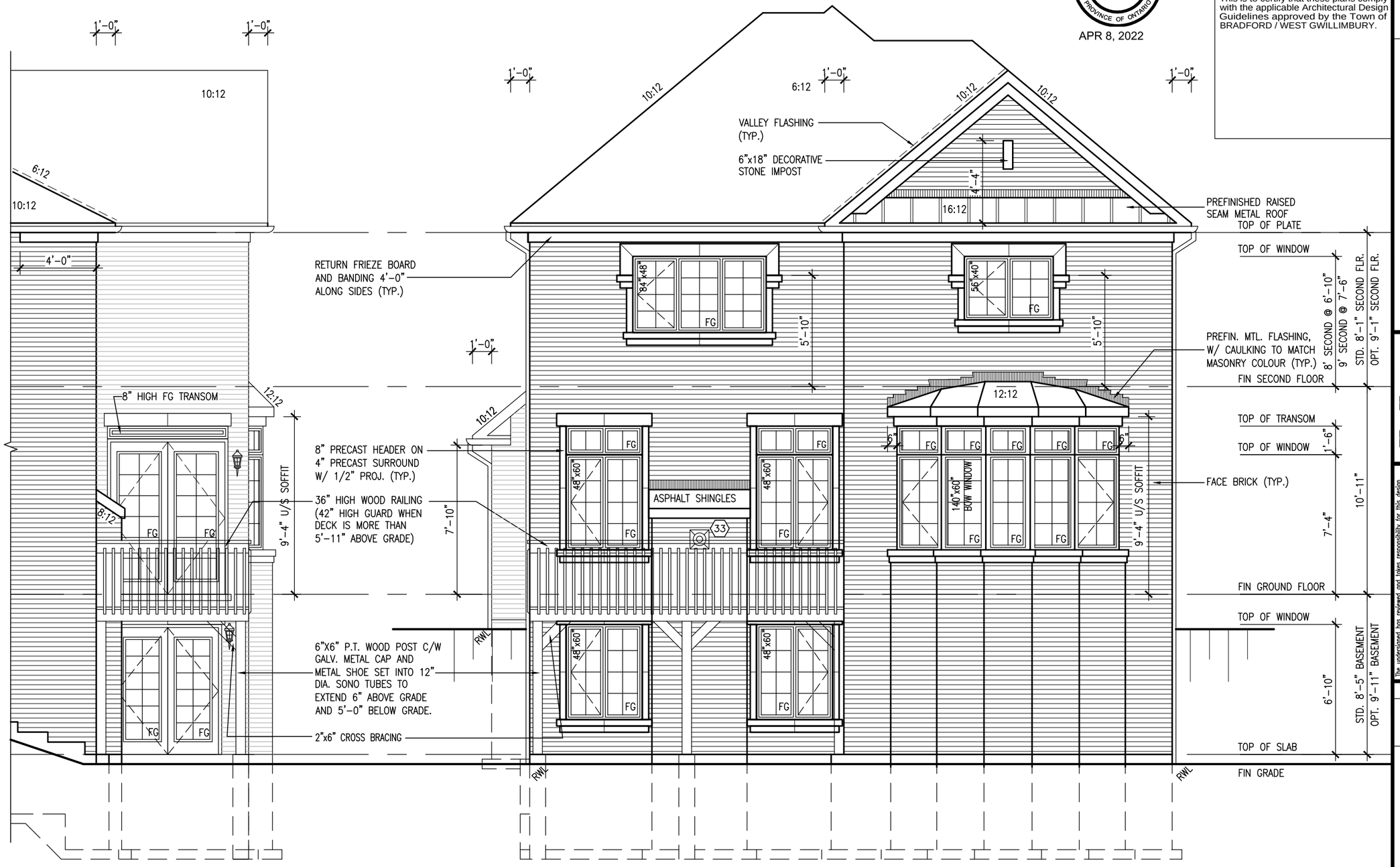

10' GROUND

UPGRADED RIGHT SIDE ELEV. 'B'
W.O.B. CONDITION

UPGRADED REAR ELEVATION 'B' W/ W.O.B. CONDITION

S42-2
RIDEAU 2

project no. 16023

BAYVIEW WELLINGTON

municipality: BRADFORD, ONT.

UPGRADED REAR ELEVATON 'B'-W.O.B. COND.

project name: GREEN VALLEY EAST

date: FEBRUARY,2017 | checked by: RC | scale: 3/16" = 1'-0" | drawing no. 30

drawn by: WT | file name: 16023-S42-2-10GRND

RICHARD - H:\ARCHIVE\WORKING\2016\16023.BW\Units\42"\16023-S42-2-10GRND.dwg - Fri - Apr 8, 2022 - 2:19 PM

VA3 DESIGN
255 Consumers Rd Suite 120
Toronto ON M2J 1R4
t 416.630.2255 f 416.630.4782
va3design.com

The undersigned has reviewed and takes responsibility for this design and has the qualifications and meets the requirements set out in the Ontario Building Code to be a Designer.

qualification information	
name	BCIN
Wellington Jno-Baptiste	25591
registration information	
VA3 Design Inc.	42658

signature

Contractor must verify all dimensions on the job and report any discrepancy to the Designer before proceeding with the work. All drawings and specifications are instruments of service and the property of the Designer which must be returned at the completion of the work. Drawings are not to be scaled.

no.	description	date	by
9	.	.	.
8	.	.	.
7	.	.	.
6	REVISED AS PER ENG'S COMMENTS	APR 08-22	RC
5	REVISED AS PER FLOOR LAYOUTS	APR 05-22	RC
4	10' GROUND FLOOR	JLU 22-21	KL
3	ADDED OPT. 9' BASEMENT	JUL 22-21	KL
2	REVISED AS PER ENG'S COMMENTS	FEB 07-18	RC
1	ISSUED FOR CLIENT REVIEW	.	.

All drawings specifications, related documents and design are the copyright property of VA3 DESIGN. Reproduction of this property in whole or in part is strictly prohibited without VA3 DESIGN's written permission.

It is the builder's complete responsibility to ensure that all plans submitted for approval fully comply with the Architectural Guidelines and all applicable regulations and requirements including zoning provisions and any provisions in the subdivision agreement. The Control Architect is not responsible in any way for examining or approving site (lotting) plans or working drawings with respect to any zoning or building code or permit matter or that any house can be properly built or located on its lot.

This is to certify that these plans comply with the applicable Architectural Design Guidelines approved by the Town of BRADFORD / WEST GWILLIMBURY.

GRAB BAR NOTE:

STUD WALL REINFORCEMENT FOR FUTURE GRAB BARS IN MAIN BATHROOM

REINFORCEMENT OF STUD WALLS SHALL BE INSTALLED ADJACENT TO WATER CLOSETS AND SHOWER OR BATHTUB IN MAIN BATHROOM PER OBC. DIV. B-9.5.2.3. REFER TO FOLLOWING SECTIONS FOR THE FIXTURES LISTED. WATER CLOSET: 3.8.3.8.(3)(a) & 3.8.3.8.(3)(c). SHOWER 3.8.3.13.(2)(g). BATHTUB 3.8.3.13.(4)(e). FREE STANDING BATHTUB EXCLUDED. SEE DETAILS PROVIDED.

GB-NOTE-2020.dwg

FLAT ROOF OVER LIVING SPACE: R2

2 PLY WATERPROOFING MEMBRANE ON 5/8" EXT. GRADE PLYWD. ON 2"x4" CROSS PURLINS (CUT DIAGONALLY @ 12" O.C. ON 2"X10" JOISTS @ 12" o.c. FLAT ROOF TO BE INSULATED W/ SPRAY INSULATION (RSI 5.46 (R31)) MIN SLOPE 2:12

NOTE: SPACE ALL FLOOR JOISTS @ 12" O.C. UNDER ALL CERAMIC TILE AREAS.

NOTE: ALL LVL'S SUPPORTING FLOOR LOADS ARE TO BE SPECIFIED BY FLOOR TRUSS MANUFACTURER.

NOTE: FLOOR FRAMING INFO REFER TO SHOP DRAWINGS FOR ALL TRUSS-JOIST INFORMATION AND DETAILS. UNLESS OTHERWISE NOTED.

OUTDOOR AIR INTAKE SEPARATION

ALL OUTDOOR AIR INTAKE VENTS TO BE SEPARATED A MINIMUM DISTANCE FROM SOURCES OF CONTAMINATION PER OBC. DIV. B- TABLE 6.2.3.12.

- KITCHEN EXHAUST. 3.0m
- DRIVEWAY, PARKING SPACE, ROAD. 1.5m
- SOLID FUEL APPLIANCE EXHAUST 3.0m

KIT-EX-NOTE-2020.dwg

ROOF NOTE R1

2"x8" @ 16" O.C. P.T. W/ 2"x4" @ 12" O.C. DIAGONALLY CUT CROSS PURLINS W/ 5/8" EXTERIOR GRADE SHEATHING W/ SINGLE PLY ROOF MEMBRANE

CANOPY ROOF NOTE:

P.T. 2"x8" ROOF JOIST @ 16" O.C., 5/8" SHEATHING SLOPED FORWARD WITH PREFIN. METAL CAP

NOTE:
REFER TO STANDARD PLAN FOR COMPLETE CONSTRUCTION NOTES.

NOTE: ROOF FRAMING

ROOF TRUSS INFORMATION REFER TO ROOF TRUSS SHOP DRAWINGS FOR ALL ROOF FRAMING INFORMATION UNLESS OTHERWISE NOTED.

10' GROUND

LICENSED PROFESSIONAL ENGINEER
S. J. BOYD
90214198
PROVINCE OF ONTARIO

APR 8, 2022

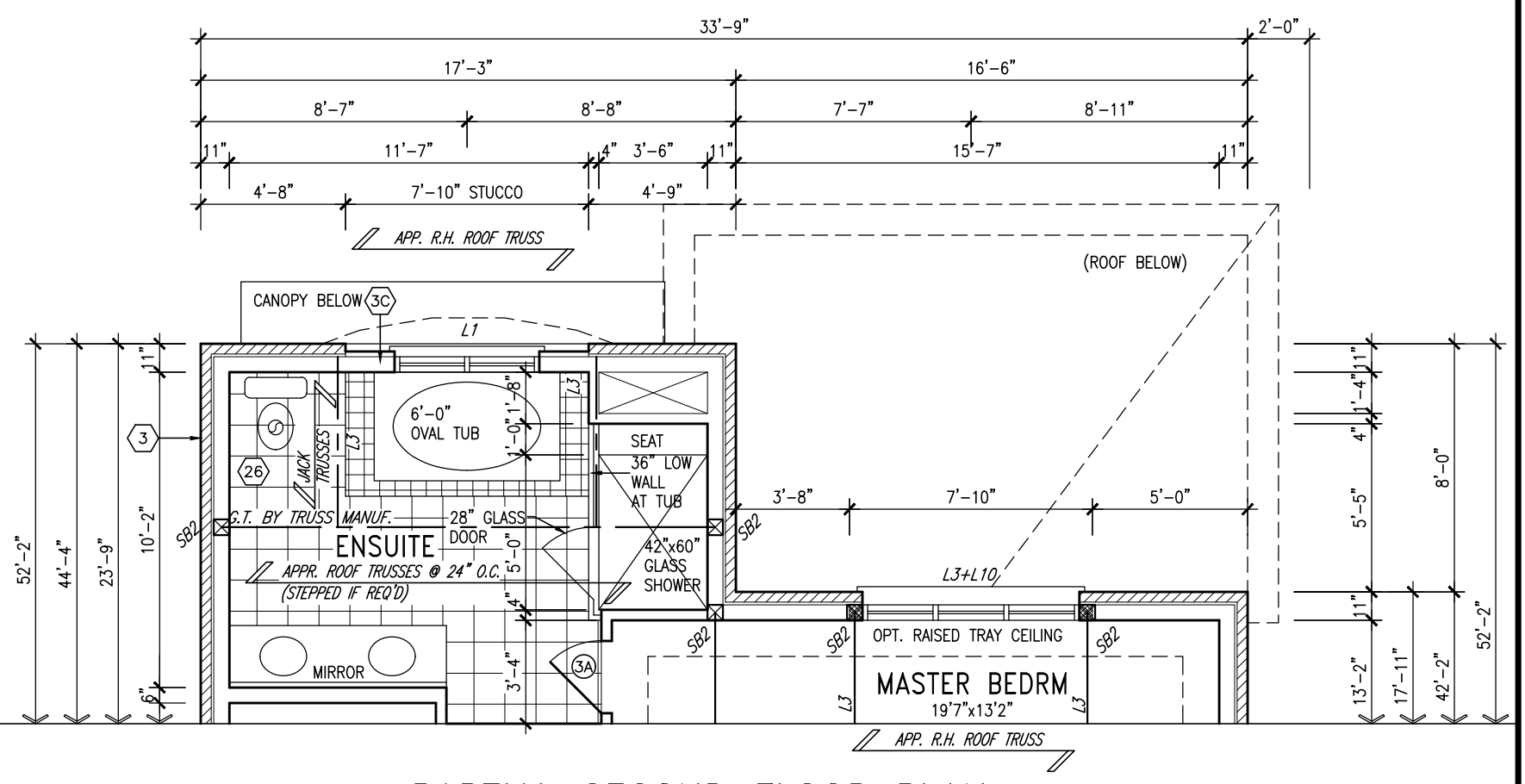

PARTIAL SECOND FLOOR PLAN
ELEVATION 'C' REAR UPGRADE

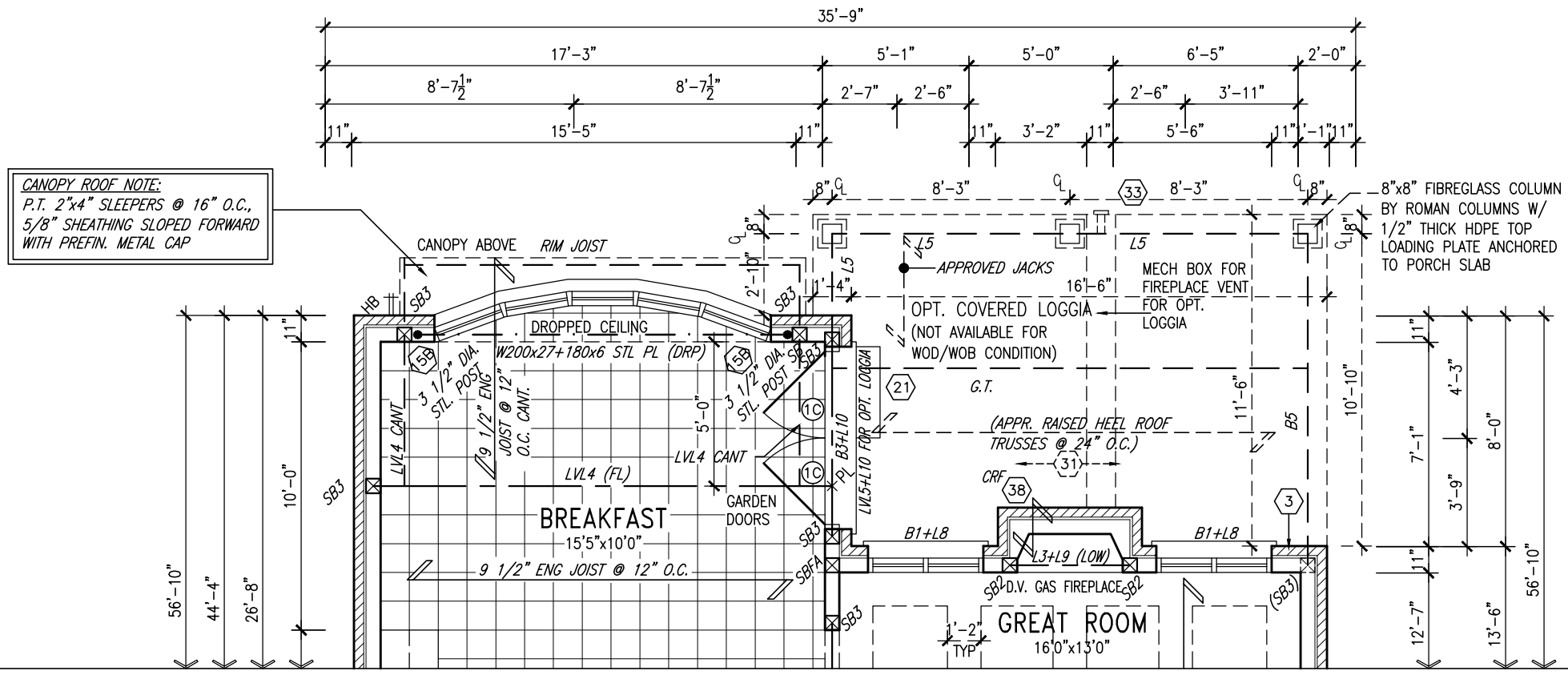

PARTIAL GROUND FLOOR PLAN
ELEVATION 'C' REAR UPGRADE

no.	description	date	by
9	.	.	.
8	.	.	.
7	.	.	.
6	REVISED AS PER ENG'S COMMENTS	APR 08-22	RC
5	REVISED AS PER FLOOR LAYOUTS	APR 05-22	RC
4	10' GROUND FLOOR	JLU 22-21	KL
3	ADDED OPT. 9' BASEMENT	JUL 22-21	KL
2	REVISED AS PER ENG'S COMMENTS	FEB 07-18	RC
1	ISSUED FOR CLIENT REVIEW	.	.

The undersigned has reviewed and takes responsibility for this design and has the qualifications and meets the requirements set out in the Ontario Building Code to be a Designer.

qualification information

name	signature	BCIN
Wellington Jno-Baptiste		25591
registration information		
VA3 Design Inc.		42658

Contractor must verify all dimensions on the job and report any discrepancy to the Designer before proceeding with the work. All drawings and specifications are instruments of service and the property of the Designer which must be returned at the completion of the work. Drawings are not to be scaled.

VA3 DESIGN
255 Consumers Rd Suite 120
Toronto ON M2J 1R4
t 416.630.2255 f 416.630.4782
va3design.com

BAYVIEW WELLINGTON

S42-2
RIDEAU 2

project name: GREEN VALLEY EAST
municipality: BRADFORD, ONT.
project no.: 16023

date: FEBRUARY,2017
PART. FLOOR PLANS- W.O.D. COND.
drawing no.: 31

drawn by: WT
checked by: RC
scale: 3/16" = 1'-0"
file name: 16023-S42-2-10GRND

RICHARD - H:\ARCHIVE\WORKING\2016\16023.BW\Units\42'\16023-S42-2-10GRND.dwg - Fri - Apr 8 2022 - 2:19 PM

All drawings specifications, related documents and design are the copyright property of VA3 DESIGN. Reproduction of this property in whole or in part is strictly prohibited without VA3 DESIGN's written permission.

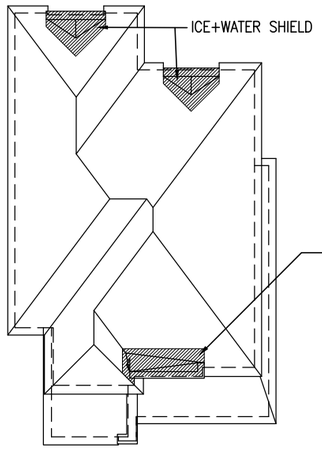

ROOF PLAN 'C'
(UPGRADED REAR)

ADD ICE+ WATER SHIELD ON TOP AND INSIDE WALLS OF PARAPET WALLS

REFER TO FRONT ELEVATION FOR TYPICAL NOTES	R.W.L. AS REQUIRED & AS PER MUNICIPALITY	SEE DETAIL S4 FOR 9'-0" BASEMENT COND

LICENSED PROFESSIONAL ENGINEER
S. J. BOYD
90214198
PROVINCE OF ONTARIO
APR 8, 2022

It is the builder's complete responsibility to ensure that all plans submitted for approval fully comply with the Architectural Guidelines and all applicable regulations and requirements including zoning provisions and any provisions in the subdivision agreement. The Control Architect is not responsible in any way for examining or approving site (lotting) plans or working drawings with respect to any zoning or building code or permit matter or that any house can be properly built or located on its lot.

This is to certify that these plans comply with the applicable Architectural Design Guidelines approved by the Town of BRADFORD / WEST GWILLIMBURY.

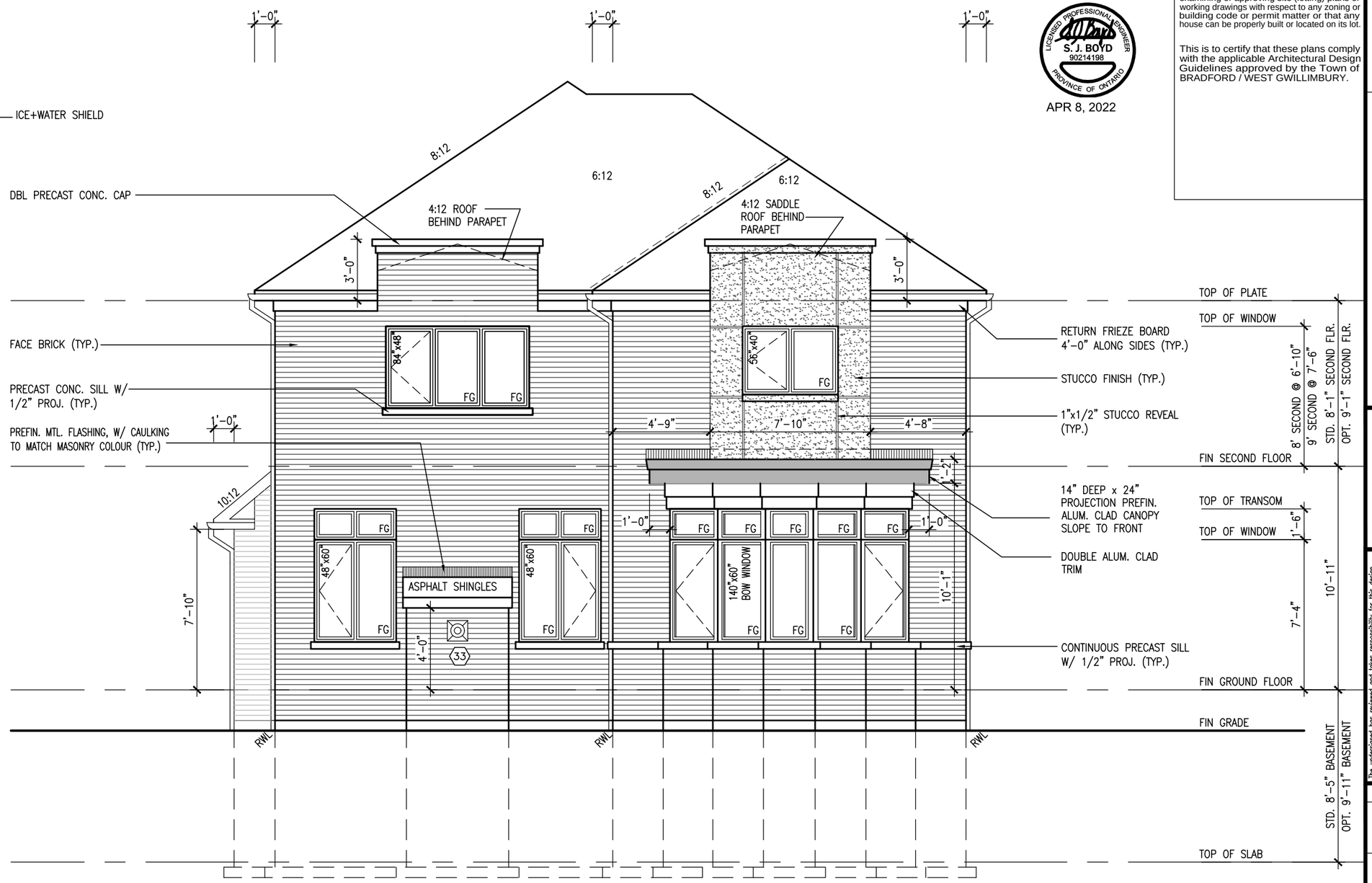

UPGRADED REAR ELEVATION 'C'

10' GROUND

BAYVIEW WELLINGTON

S42-2
RIDEAU 2

project no. 16023

drawing no. 32

municipality: BRADFORD, ONT.

UPGRADED REAR ELEVATION 'C'

project name: GREEN VALLEY EAST

date: FEBRUARY,2017 | drawn by: WT | checked by: RC | scale: 3/16" = 1'-0" | file name: 16023-S42-2-10GRND

RICHARD - H:\ARCHIVE\WORKING\2016\16023.BW\Units\42^\16023-S42-2-10GRND.dwg - Fri - Apr 8, 2022 - 2:19 PM

VA3 DESIGN
255 Consumers Rd Suite 120
Toronto ON M2J 1R4
t 416.630.2255 f 416.630.4782
va3design.com

The undersigned has reviewed and takes responsibility for this design and has the qualifications and meets the requirements set out in the Ontario Building Code to be a Designer.

qualification information	
name	Wellington Jno-Baptiste
registration information	25591 BCIN
firm	VA3 Design Inc. 42658

Signature

Contractor must verify all dimensions on the job and report any discrepancy to the Designer before proceeding with the work. All dimensions on specifications and instruments of service are the property of the Designer which must be returned at the completion of the work. Drawings are not to be scaled.

no.	description	date	by
9	.	.	.
8	.	.	.
7	.	.	.
6	REVISED AS PER ENG'S COMMENTS	APR 08-22	RC
5	REVISED AS PER FLOOR LAYOUTS	APR 05-22	RC
4	10' GROUND FLOOR	JLU 22-21	KL
3	ADDED OPT. 9' BASEMENT	JUL 22-21	KL
2	REVISED AS PER ENG'S COMMENTS	FEB 07-18	RC
1	ISSUED FOR CLIENT REVIEW	.	.

All drawings specifications, related documents and design are the copyright property of VA3 DESIGN. Reproduction of this property in whole or in part is strictly prohibited without VA3 DESIGN's written permission.

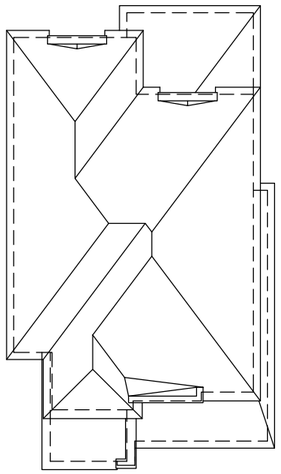

ROOF PLAN 'C'
(UPGRADED REAR w/ LOGGIA)

ADD ICE+ WATER SHIELD ON TOP AND INSIDE WALLS OF PARAPET WALLS

REFER TO FRONT ELEVATION FOR TYPICAL NOTES	R.W.L. AS REQUIRED & AS PER MUNICIPALITY	SEE DETAIL S4 FOR 9'-0" BASEMENT COND

LICENSED PROFESSIONAL ENGINEER
S. J. BOYD
90214198
PROVINCE OF ONTARIO
APR 8, 2022

It is the builder's complete responsibility to ensure that all plans submitted for approval fully comply with the Architectural Guidelines and all applicable regulations and requirements including zoning provisions and any provisions in the subdivision agreement. The Control Architect is not responsible in any way for examining or approving site (lotting) plans or working drawings with respect to any zoning or building code or permit matter or that any house can be properly built or located on its lot.

This is to certify that these plans comply with the applicable Architectural Design Guidelines approved by the Town of BRADFORD / WEST GWILLIMBURY.

UPGRADED REAR ELEVATION 'C' (with OPT. LOGGIA)

10' GROUND

BAYVIEW WELLINGTON

S42-2
RIDEAU 2

project no. 16023

drawing no. 33

municipality: BRADFORD, ONT.

project name: GREEN VALLEY EAST

UPGRADED REAR ELEVATION 'C' (w/ OPT. LOGGIA)

date: FEBRUARY,2017
drawn by: WT
checked by: RC
scale: 3/16" = 1'-0"
file name: 16023-S42-2-10GRND
RICHARD – H:\ARCHIVE\WORKING\2016\16023.BW\Units\42"\16023-S42-2-10GRND.dwg – Fri – Apr 8, 2022 – 2:19 PM

VA3 DESIGN
255 Consumers Rd Suite 120
Toronto ON M2J 1R4
t 416.630.2255 f 416.630.4782
va3design.com

The undersigned has reviewed and takes responsibility for this design and has the qualifications and meets the requirements set out in the Ontario Building Code to be a Designer.

qualification information	
name	Wellington Jno-Baptiste
registration information	VA3 Design Inc.
signature	
BCIN	25591
	42658

Contractor must verify all dimensions on the job and report any discrepancy to the Designer before proceeding with the work. All drawings, specifications and instruments of service are the property of the Designer which must be returned at the completion of the work. Drawings are not to be scaled.

no.	description	date	by
9	.	.	.
8	.	.	.
7	.	.	.
6	REVISED AS PER ENG'S COMMENTS	APR 08-22	RC
5	REVISED AS PER FLOOR LAYOUTS	APR 05-22	RC
4	10' GROUND FLOOR	JLU 22-21	KL
3	ADDED OPT. 9' BASEMENT	JUL 22-21	KL
2	REVISED AS PER ENG'S COMMENTS	FEB 07-18	RC
1	ISSUED FOR CLIENT REVIEW	.	.

All drawings specifications, related documents and design are the copyright property of VA3 DESIGN. Reproduction of this property in whole or in part is strictly prohibited without VA3 DESIGN's written permission.

ADD ICE+ WATER SHIELD ON TOP AND INSIDE WALLS OF PARAPET WALLS

REFER TO FRONT ELEVATION FOR TYPICAL NOTES	R.W.L. AS REQUIRED & AS PER MUNICIPALITY	SEE DETAIL S4 FOR 9'-0" BASEMENT COND

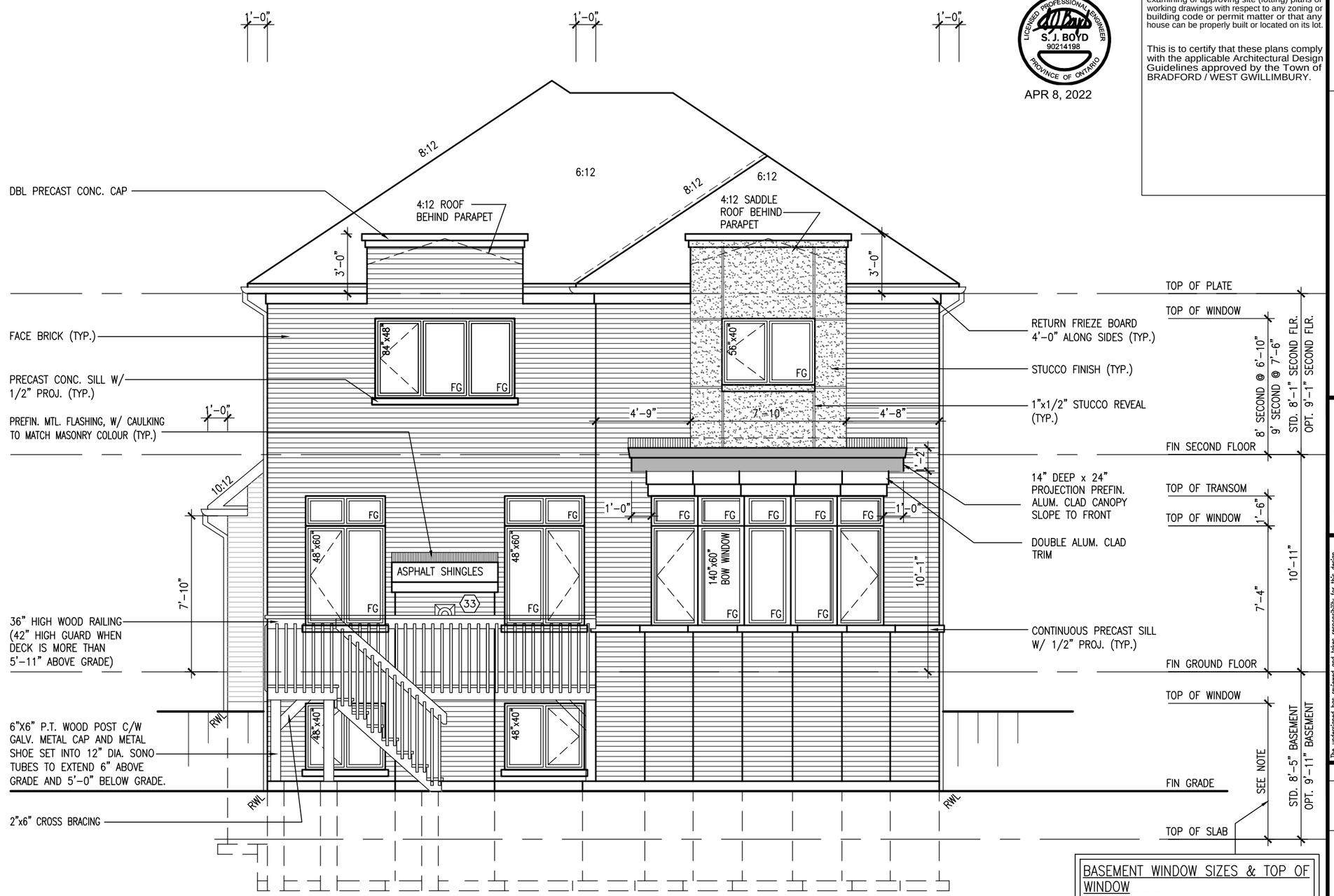

UPGRADED REAR ELEVATION 'C' W.O.D. COND.

10' GROUND

BASEMENT WINDOW SIZES & TOP OF WINDOW

STD. BASEMENT

- 4R-8R USE 30"x24" VINYL CLAD STRUCTURAL STEEL FRAME BASEMENT WINDOWS

OPT. 9'-0" BASEMENT

- 9R-11R USE 40" DEEP CASEMENT WINDOWS @ 8'-4" TOP OF WINDOW
- 12R OR GREATER USE 40" DEEP CASEMENT WINDOWS @ 6'-10" TOP OF WINDOW

LICENSED PROFESSIONAL ENGINEER S. J. BOYD 90214198 PROVINCE OF ONTARIO

APR 8, 2022

It is the builder's complete responsibility to ensure that all plans submitted for approval fully comply with the Architectural Guidelines and all applicable regulations and requirements including zoning provisions and any provisions in the subdivision agreement. The Control Architect is not responsible in any way for examining or approving site (lotting) plans or working drawings with respect to any zoning or building code or permit matter or that any house can be properly built or located on its lot.

This is to certify that these plans comply with the applicable Architectural Design Guidelines approved by the Town of BRADFORD / WEST GWILLIMBURY.

BAYVIEW WELLINGTON

S42-2 RIDEAU 2

project no. 16023

drawing no. **34**

municipality BRADFORD, ONT.

UPGRADED REAR ELEVATION 'C'-W.O.D. COND.

project name GREEN VALLEY EAST

date FEBRUARY,2017 | drawn by WT | checked by RC | scale 3/16" = 1'-0" | file name 16023-S42-2-10GRND

RICHARD - H:\ARCHIVE\WORKING\2016\16023.BW\Units\s2^\16023-S42-2-10GRND.dwg - Fri - Apr 8, 2022 - 2:19 PM

VA3 DESIGN
255 Consumers Rd Suite 120
Toronto ON M2J 1R4
t 416.630.2255 f 416.630.4782
va3design.com

The undersigned has reviewed and takes responsibility for this design and has the qualifications and meets the requirements set out in the Ontario Building Code to be a Designer.

qualification information	signature
Wellington Jno-Baptiste	
registration information	name	BCIN
VA3 Design Inc.		42658

Contractor must verify all dimensions on the job and report any discrepancy to the Designer before proceeding with the work. All dimensions over specifications and instruments of service are the property of the Designer which must be returned at the completion of the work. Drawings are not to be scaled.

no.	description	date	by
9	.	.	.
8	.	.	.
7	.	.	.
6	REVISED AS PER ENG'S COMMENTS	APR 08-22	RC
5	REVISED AS PER FLOOR LAYOUTS	APR 05-22	RC
4	10' GROUND FLOOR	JLU 22-21	KL
3	ADDED OPT. 9' BASEMENT	JUL 22-21	KL
2	REVISED AS PER ENG'S COMMENTS	FEB 07-18	RC
1	ISSUED FOR CLIENT REVIEW	.	.

All drawings specifications, related documents and design are the copyright property of VA3 DESIGN. Reproduction of this property in whole or in part is strictly prohibited without VA3 DESIGN's written permission.

ADD ICE+ WATER SHIELD ON TOP AND INSIDE WALLS OF PARAPET WALLS

REFER TO FRONT ELEVATION FOR TYPICAL NOTES	R.W.L. AS REQUIRED & AS PER MUNICIPALITY	SEE DETAIL S4 FOR 9'-0" BASEMENT COND

It is the builder's complete responsibility to ensure that all plans submitted for approval fully comply with the Architectural Guidelines and all applicable regulations and requirements including zoning provisions and any provisions in the subdivision agreement. The Control Architect is not responsible in any way for examining or approving site (lotting) plans or working drawings with respect to any zoning or building code or permit matter or that any house can be properly built or located on its lot.

This is to certify that these plans comply with the applicable Architectural Design Guidelines approved by the Town of BRADFORD / WEST GWILLIMBURY.

LICENSED PROFESSIONAL ENGINEER
S. J. BOYD
90214198
PROVINCE OF ONTARIO

APR 8, 2022

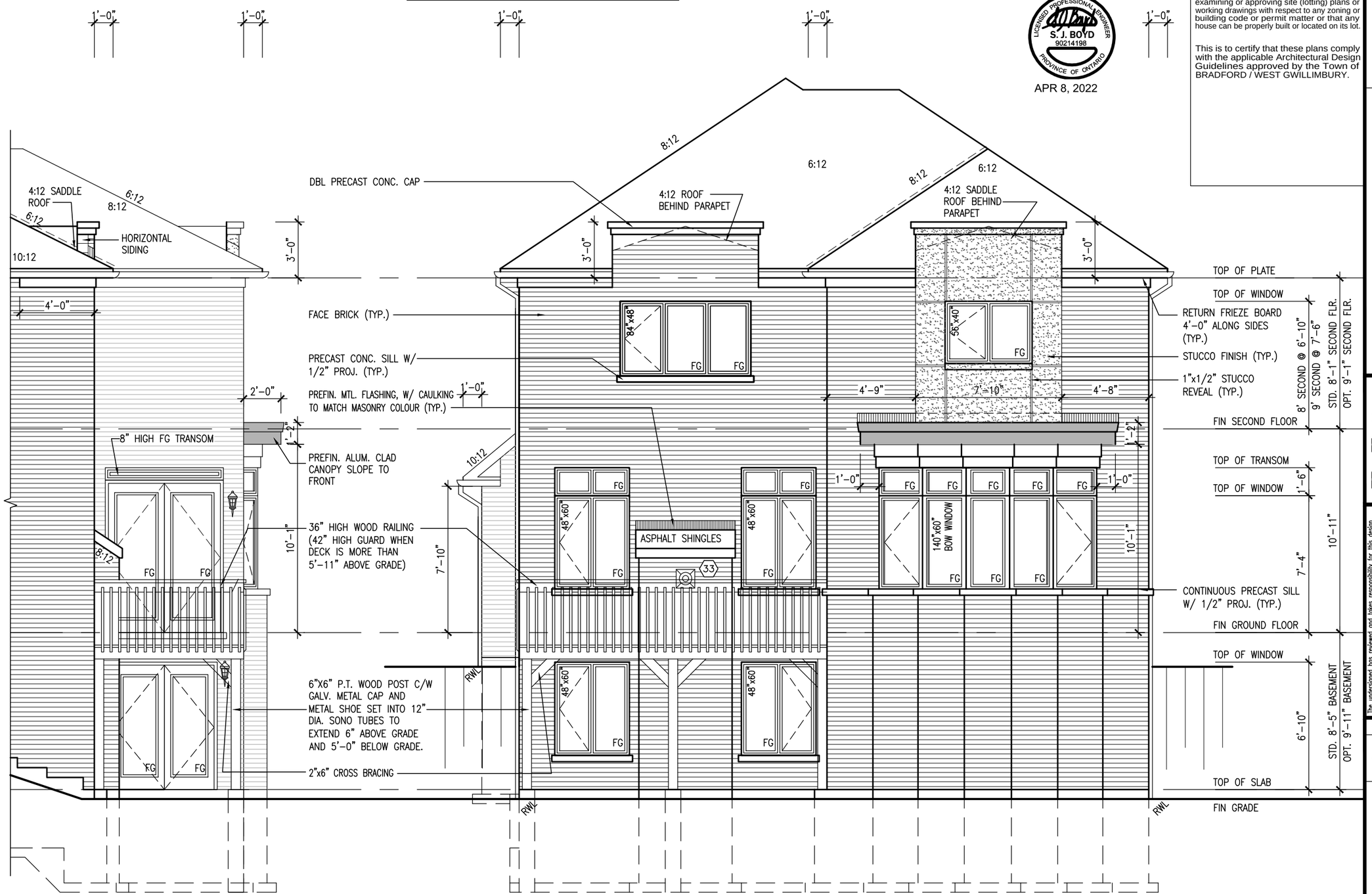

10' GROUND

UPGRADED RIGHT SIDE ELEV. 'C'
W.O.B. CONDITION

UPGRADED REAR ELEVATION 'C' W/ W.O.B. CONDITION

S42-2
RIDEAU 2

project no. 16023

drawing no. 35

BAYVIEW WELLINGTON

municipality
BRADFORD, ONT.

UPGRADED REAR ELEVATION 'C'-W.O.B. COND.

project name GREEN VALLEY EAST
date FEBRUARY,2017
drawn by WT
checked by RC
scale 3/16" = 1'-0"
file name 16023-S42-2-10GRND
RICHARD - H:\ARCHIVE\WORKING\2016\16023.BW\Units\42"\16023-S42-2-10GRND.dwg - Fri - Apr 8, 2022 - 2:19 PM

VA3 DESIGN
255 Consumers Rd Suite 120
Toronto ON M2J 1R4
t 416.630.2255 f 416.630.4782
va3design.com

The undersigned has reviewed and takes responsibility for this design and has the qualifications and meets the requirements set out in the Ontario Building Code to be a Designer.

qualification information	signature
Wellington Jno-Baptiste	25591
registration information	BCIN
VA3 Design Inc.	42658

Contractor must verify all dimensions on the job and report any discrepancy to the Designer before proceeding with the work. All drawings or specifications or other instruments of service are the property of the Designer which must be returned at the completion of the work. Drawings are not to be scaled.

no.	description	date	by
9	.	.	.
8	.	.	.
7	.	.	.
6	REVISED AS PER ENG'S COMMENTS	APR 08-22	RC
5	REVISED AS PER FLOOR LAYOUTS	APR 05-22	RC
4	10' GROUND FLOOR	JLU 22-21	KL
3	ADDED OPT. 9' BASEMENT	JUL 22-21	KL
2	REVISED AS PER ENG'S COMMENTS	FEB 07-18	RC
1	ISSUED FOR CLIENT REVIEW	.	.

All drawings specifications, related documents and design are the copyright property of VA3 DESIGN. Reproduction of this property in whole or in part is strictly prohibited without VA3 DESIGN's written permission.

UNINSULATED OPENINGS (PER OBC. SB-12,3.1.1(7))

S42-2 EL.A/A REAR UPG. W/ 9' SEC	ENERGY EFFICIENCY – OBC SB12		
ELEVATION	WALL AREA S.F.	OPENING S.F.	PERCENTAGE
FRONT	772.64 S.F.	174.39 S.F.	22.57 %
LEFT SIDE	1147.67 S.F.	82.44 S.F.	7.18 %
RIGHT SIDE	1147.67 S.F.	77.94 S.F.	6.79 %
REAR	764.17 S.F.	171.39 S.F.	22.43 %
* OPENINGS OMITTED AS PER SB-12 3.1.1.9(4) MAX 19.9 S.F. REFER TO ELEVATION FOR LOCATION		0.00 S.F.	
TOTAL SQ. FT.	3832.15 S.F.	506.16 S.F.	13.21 %
TOTAL SQ. M.	356.02 S.M.	47.02 S.M.	13.21 %

UNINSULATED OPENINGS (PER OBC. SB-12,3.1.1(7))

S42-2 EL.B/B REAR UPG. W/ 9' SEC	ENERGY EFFICIENCY – OBC SB12		
ELEVATION	WALL AREA S.F.	OPENING S.F.	PERCENTAGE
FRONT	779.67 S.F.	163.89 S.F.	21.02 %
LEFT SIDE	1158.67 S.F.	82.44 S.F.	7.12 %
RIGHT SIDE	1161.67 S.F.	77.94 S.F.	6.71 %
REAR	764.17 S.F.	171.39 S.F.	22.43 %
* OPENINGS OMITTED AS PER SB-12 3.1.1.9(4) MAX 19.9 S.F. REFER TO ELEVATION FOR LOCATION		0.00 S.F.	
TOTAL SQ. FT.	3864.18 S.F.	495.66 S.F.	12.83 %
TOTAL SQ. M.	358.99 S.M.	46.05 S.M.	12.83 %

UNINSULATED OPENINGS (PER OBC. SB-12,3.1.1(7))

S42-2 EL.C/C REAR UPG. W/ 9' SEC	ENERGY EFFICIENCY – OBC SB12		
ELEVATION	WALL AREA S.F.	OPENING S.F.	PERCENTAGE
FRONT	768.24 S.F.	178.44 S.F.	23.23 %
LEFT SIDE	1157.19 S.F.	82.89 S.F.	7.16 %
RIGHT SIDE	1153.17 S.F.	90.44 S.F.	7.84 %
REAR	764.17 S.F.	171.39 S.F.	22.43 %
* OPENINGS OMITTED AS PER SB-12 3.1.1.9(4) MAX 19.9 S.F. REFER TO ELEVATION FOR LOCATION		0.00 S.F.	
TOTAL SQ. FT.	3842.77 S.F.	523.16 S.F.	13.61 %
TOTAL SQ. M.	357.00 S.M.	48.60 S.M.	13.61 %

UNINSULATED OPENINGS (PER OBC. SB-12,3.1.1(7))

S42-2 EL.A/A REAR UPG. WOD W/ 9' SEC	ENERGY EFFICIENCY – OBC SB12		
ELEVATION	WALL AREA S.F.	OPENING S.F.	PERCENTAGE
FRONT	772.64 S.F.	174.39 S.F.	22.57 %
LEFT SIDE	1147.67 S.F.	82.44 S.F.	7.18 %
RIGHT SIDE	1147.67 S.F.	77.94 S.F.	6.79 %
REAR	899.17 S.F.	198.06 S.F.	22.03 %
* OPENINGS OMITTED AS PER SB-12 3.1.1.9(4) MAX 19.9 S.F. REFER TO ELEVATION FOR LOCATION		0.00 S.F.	
TOTAL SQ. FT.	3967.15 S.F.	532.83 S.F.	13.43 %
TOTAL SQ. M.	368.56 S.M.	49.50 S.M.	13.43 %

UNINSULATED OPENINGS (PER OBC. SB-12,3.1.1(7))

S42-2 EL.B/B REAR UPG. WOD W/ 9' SEC	ENERGY EFFICIENCY – OBC SB12		
ELEVATION	WALL AREA S.F.	OPENING S.F.	PERCENTAGE
FRONT	779.67 S.F.	163.89 S.F.	21.02 %
LEFT SIDE	1158.67 S.F.	82.44 S.F.	7.12 %
RIGHT SIDE	1161.67 S.F.	77.94 S.F.	6.71 %
REAR	899.17 S.F.	198.06 S.F.	22.03 %
* OPENINGS OMITTED AS PER SB-12 3.1.1.9(4) MAX 19.9 S.F. REFER TO ELEVATION FOR LOCATION		0.00 S.F.	
TOTAL SQ. FT.	3999.18 S.F.	522.33 S.F.	13.06 %
TOTAL SQ. M.	371.53 S.M.	48.53 S.M.	13.06 %

UNINSULATED OPENINGS (PER OBC. SB-12,3.1.1(7))

S42-2 EL.C/C REAR UPG. WOD W/ 9' SEC	ENERGY EFFICIENCY – OBC SB12		
ELEVATION	WALL AREA S.F.	OPENING S.F.	PERCENTAGE
FRONT	768.24 S.F.	178.44 S.F.	23.23 %
LEFT SIDE	1157.19 S.F.	82.89 S.F.	7.16 %
RIGHT SIDE	1153.17 S.F.	90.44 S.F.	7.84 %
REAR	899.17 S.F.	198.06 S.F.	22.03 %
* OPENINGS OMITTED AS PER SB-12 3.1.1.9(4) MAX 19.9 S.F. REFER TO ELEVATION FOR LOCATION		0.00 S.F.	
TOTAL SQ. FT.	3977.77 S.F.	549.83 S.F.	13.82 %
TOTAL SQ. M.	369.54 S.M.	51.08 S.M.	13.82 %

UNINSULATED OPENINGS (PER OBC. SB-12,3.1.1(7))

S42-2 EL.A/A REAR UPG. WOB W/ 9' SEC	ENERGY EFFICIENCY – OBC SB12		
ELEVATION	WALL AREA S.F.	OPENING S.F.	PERCENTAGE
FRONT	772.64 S.F.	174.39 S.F.	22.57 %
LEFT SIDE	1147.67 S.F.	82.44 S.F.	7.18 %
RIGHT SIDE	1279.48 S.F.	116.67 S.F.	9.12 %
REAR	997.60 S.F.	211.39 S.F.	21.19 %
* OPENINGS OMITTED AS PER SB-12 3.1.1.9(4) MAX 19.9 S.F. REFER TO ELEVATION FOR LOCATION		0.00 S.F.	
TOTAL SQ. FT.	4197.39 S.F.	584.89 S.F.	13.93 %
TOTAL SQ. M.	389.95 S.M.	54.34 S.M.	13.93 %

UNINSULATED OPENINGS (PER OBC. SB-12,3.1.1(7))

S42-2 EL.B/B REAR UPG. WOB W/ 9' SEC	ENERGY EFFICIENCY – OBC SB12		
ELEVATION	WALL AREA S.F.	OPENING S.F.	PERCENTAGE
FRONT	779.67 S.F.	163.89 S.F.	21.02 %
LEFT SIDE	1158.67 S.F.	82.44 S.F.	7.12 %
RIGHT SIDE	1293.48 S.F.	116.67 S.F.	9.02 %
REAR	997.60 S.F.	211.39 S.F.	21.19 %
* OPENINGS OMITTED AS PER SB-12 3.1.1.9(4) MAX 19.9 S.F. REFER TO ELEVATION FOR LOCATION		0.00 S.F.	
TOTAL SQ. FT.	4229.42 S.F.	574.39 S.F.	13.58 %
TOTAL SQ. M.	392.92 S.M.	53.36 S.M.	13.58 %

UNINSULATED OPENINGS (PER OBC. SB-12,3.1.1(7))

S42-2 EL.C/C REAR UPG. WOB W/ 9' SEC	ENERGY EFFICIENCY – OBC SB12		
ELEVATION	WALL AREA S.F.	OPENING S.F.	PERCENTAGE
FRONT	768.24 S.F.	178.44 S.F.	23.23 %
LEFT SIDE	1157.19 S.F.	82.89 S.F.	7.16 %
RIGHT SIDE	1284.98 S.F.	129.16 S.F.	10.05 %
REAR	997.60 S.F.	211.39 S.F.	21.19 %
* OPENINGS OMITTED AS PER SB-12 3.1.1.9(4) MAX 19.9 S.F. REFER TO ELEVATION FOR LOCATION		0.00 S.F.	
TOTAL SQ. FT.	4208.01 S.F.	601.88 S.F.	14.30 %
TOTAL SQ. M.	390.93 S.M.	55.92 S.M.	14.30 %

10' GROUND

It is the builder's complete responsibility to ensure that all plans submitted for approval fully comply with the Architectural Guidelines and all applicable regulations and requirements including zoning provisions and any provisions in the subdivision agreement. The Control Architect is not responsible in any way for examining or approving site (lotting) plans or working drawings with respect to any zoning or building code or permit matter or that any house can be properly built or located on its lot.

This is to certify that these plans comply with the applicable Architectural Design Guidelines approved by the Town of BRADFORD / WEST GWILLIMBURY.

S42-2
RIDEAU 2

project no. 16023

BAYVIEW WELLINGTON

municipality
BRADFORD, ONT.

project name
GREEN VALLEY EAST

SB12 – W/ OPT. 9' SECOND FLOOR

drawing no. **36**

date FEBRUARY,2017
drawn by WT
checked by RC
scale 3/16" = 1'-0"
file name 16023-S42-2-10GRND

RICHARD – H:\ARCHIVE\WORKING\2016\16023.BW\Units\s2^\16023-S42-2-10GRND.dwg – Fri – Apr 8, 2022 – 2:19 PM

VA3 DESIGN
255 Consumers Rd Suite 120
Toronto ON M2J 1R4
t 416.630.2255 f 416.630.4782
va3design.com

The undersigned has reviewed and takes responsibility for this design and has the qualifications and meets the requirements set out in the Ontario Building Code to be a Designer.

qualification information
Wellington Jno-Baptiste 25591
signature BCIN
registration information
name VA3 Design Inc. 42658

Contractor must verify all dimensions on the job and report any discrepancy to the Designer before proceeding with the work. All drawings and specifications are instruments of service of the property of the Designer which must be returned at the completion of the work. Drawings are not to be scaled.

no.	description	date	by
9	.	.	.
8	.	.	.
7	.	.	.
6	REVISED AS PER ENG'S COMMENTS	APR 08-22	RC
5	REVISED AS PER FLOOR LAYOUTS	APR 05-22	RC
4	10' GROUND FLOOR	JLU 22-21	KL
3	ADDED OPT. 9' BASEMENT	JUL 22-21	KL
2	REVISED AS PER ENG'S COMMENTS	FEB 07-18	RC
1	ISSUED FOR CLIENT REVIEW	.	.

All drawings specifications, related documents and design are the copyright property of VA3 DESIGN. Reproduction of this property in whole or in part is strictly prohibited without VA3 DESIGN's written permission.

UNINSULATED OPENINGS (PER OBC. SB-12,3.1.1(7))

S42-2 EL.A/A REAR UPG. WOB W/9' BSMT+8' 2ND	ENERGY EFFICIENCY – OBC SB12		
ELEVATION	WALL AREA S.F.	OPENING S.F.	PERCENTAGE
FRONT	738.89 S.F.	174.39 S.F.	23.60 %
LEFT SIDE	1095.50 S.F.	82.44 S.F.	7.53 %
RIGHT SIDE	1255.90 S.F.	116.67 S.F.	9.29 %
REAR	1014.48 S.F.	211.39 S.F.	20.84 %
* OPENINGS OMITTED AS PER SB-12 3.1.1.9(4) MAX 19.9 S.F. REFER TO ELEVATION FOR LOCATION		0.00 S.F.	
TOTAL SQ. FT.	4104.77 S.F.	584.89 S.F.	14.25 %
TOTAL SQ. M.	381.34 S.M.	54.34 S.M.	14.25 %

UNINSULATED OPENINGS (PER OBC. SB-12,3.1.1(7))

S42-2 EL.A/A REAR UPG. WOB W/ 9' BSMT+2ND	ENERGY EFFICIENCY – OBC SB12		
ELEVATION	WALL AREA S.F.	OPENING S.F.	PERCENTAGE
FRONT	772.64 S.F.	174.39 S.F.	22.57 %
LEFT SIDE	1147.67 S.F.	82.44 S.F.	7.18 %
RIGHT SIDE	1308.07 S.F.	116.67 S.F.	8.92 %
REAR	1048.23 S.F.	211.39 S.F.	20.17 %
* OPENINGS OMITTED AS PER SB-12 3.1.1.9(4) MAX 19.9 S.F. REFER TO ELEVATION FOR LOCATION		0.00 S.F.	
TOTAL SQ. FT.	4276.61 S.F.	584.89 S.F.	13.68 %
TOTAL SQ. M.	397.31 S.M.	54.34 S.M.	13.68 %

UNINSULATED OPENINGS (PER OBC. SB-12,3.1.1(7))

S42-2 EL.B/B REAR UPG. WOB W/9' BSMT+8' 2ND	ENERGY EFFICIENCY – OBC SB12		
ELEVATION	WALL AREA S.F.	OPENING S.F.	PERCENTAGE
FRONT	745.92 S.F.	163.89 S.F.	21.97 %
LEFT SIDE	1106.00 S.F.	82.44 S.F.	7.45 %
RIGHT SIDE	1269.40 S.F.	116.67 S.F.	9.19 %
REAR	1014.48 S.F.	211.39 S.F.	20.84 %
* OPENINGS OMITTED AS PER SB-12 3.1.1.9(4) MAX 19.9 S.F. REFER TO ELEVATION FOR LOCATION		0.00 S.F.	
TOTAL SQ. FT.	4135.80 S.F.	574.39 S.F.	13.89 %
TOTAL SQ. M.	384.23 S.M.	53.36 S.M.	13.89 %

UNINSULATED OPENINGS (PER OBC. SB-12,3.1.1(7))

S42-2 EL.B/B REAR UPG. WOB W/ 9' BSMT+2ND	ENERGY EFFICIENCY – OBC SB12		
ELEVATION	WALL AREA S.F.	OPENING S.F.	PERCENTAGE
FRONT	779.67 S.F.	163.89 S.F.	21.02 %
LEFT SIDE	1158.67 S.F.	82.44 S.F.	7.12 %
RIGHT SIDE	1322.07 S.F.	116.67 S.F.	8.82 %
REAR	1048.23 S.F.	211.39 S.F.	20.17 %
* OPENINGS OMITTED AS PER SB-12 3.1.1.9(4) MAX 19.9 S.F. REFER TO ELEVATION FOR LOCATION		0.00 S.F.	
TOTAL SQ. FT.	4308.64 S.F.	574.39 S.F.	13.33 %
TOTAL SQ. M.	400.28 S.M.	53.36 S.M.	13.33 %

UNINSULATED OPENINGS (PER OBC. SB-12,3.1.1(7))

S42-2 EL.C/C REAR UPG. WOB W/9' BSMT+8' 2ND	ENERGY EFFICIENCY – OBC SB12		
ELEVATION	WALL AREA S.F.	OPENING S.F.	PERCENTAGE
FRONT	734.49 S.F.	178.44 S.F.	24.29 %
LEFT SIDE	1104.52 S.F.	82.89 S.F.	7.50 %
RIGHT SIDE	1261.15 S.F.	129.16 S.F.	10.24 %
REAR	1014.48 S.F.	211.39 S.F.	20.84 %
* OPENINGS OMITTED AS PER SB-12 3.1.1.9(4) MAX 19.9 S.F. REFER TO ELEVATION FOR LOCATION		0.00 S.F.	
TOTAL SQ. FT.	4114.64 S.F.	601.88 S.F.	14.63 %
TOTAL SQ. M.	382.26 S.M.	55.92 S.M.	14.63 %

UNINSULATED OPENINGS (PER OBC. SB-12,3.1.1(7))

S42-2 EL.C/C REAR UPG. WOB W/ 9' BSMT+2ND	ENERGY EFFICIENCY – OBC SB12		
ELEVATION	WALL AREA S.F.	OPENING S.F.	PERCENTAGE
FRONT	768.24 S.F.	178.44 S.F.	23.23 %
LEFT SIDE	1157.19 S.F.	82.89 S.F.	7.16 %
RIGHT SIDE	1313.57 S.F.	129.16 S.F.	9.83 %
REAR	1048.23 S.F.	211.39 S.F.	20.17 %
* OPENINGS OMITTED AS PER SB-12 3.1.1.9(4) MAX 19.9 S.F. REFER TO ELEVATION FOR LOCATION		0.00 S.F.	
TOTAL SQ. FT.	4287.23 S.F.	601.88 S.F.	14.04 %
TOTAL SQ. M.	398.29 S.M.	55.92 S.M.	14.04 %

10' GROUND

It is the builder's complete responsibility to ensure that all plans submitted for approval fully comply with the Architectural Guidelines and all applicable regulations and requirements including zoning provisions and any provisions in the subdivision agreement. The Control Architect is not responsible in any way for examining or approving site (lotting) plans or working drawings with respect to any zoning or building code or permit matter or that any house can be properly built or located on its lot.

This is to certify that these plans comply with the applicable Architectural Design Guidelines approved by the Town of BRADFORD / WEST GWILLIMBURY.

S42-2
RIDEAU 2

project no. 16023

BAYVIEW WELLINGTON

municipality: BRADFORD, ONT.

project name: GREEN VALLEY EAST

SB12 – OPT. 9' BASEMENT W/ 8' 2ND OR 9' 2ND

date: FEBRUARY,2017
drawn by: WT
checked by: RC
scale: 3/16" = 1'-0"
file name: 16023-S42-2-10GRND
RICHARD – H:\ARCHIVE\WORKING\2016\16023.BW\Units\42\16023-S42-2-10GRND.dwg – Fri – Apr 8, 2022 – 2:19 PM

drawing no. **37**

VA3 DESIGN
255 Consumers Rd Suite 120
Toronto ON M2J 1R4
t 416.630.2255 f 416.630.4782
va3design.com

The undersigned has reviewed and takes responsibility for this design and has the qualifications and meets the requirements set out in the Ontario Building Code to be a Designer.

qualification information

Wellington Jno-Baptiste	25591
registration information	BCIN
VA3 Design Inc.	42658

signature

Contractor must verify all dimensions on the job and report any discrepancy to the Designer before proceeding with the work. All drawings or specifications or instruments of service are the property of the Designer which must be returned at the completion of the work. Drawings are not to be scaled.

no.	description	date	by
9	.	.	.
8	.	.	.
7	.	.	.
6	REVISED AS PER ENG'S COMMENTS	APR 08-22	RC
5	REVISED AS PER FLOOR LAYOUTS	APR 05-22	RC
4	10' GROUND FLOOR	JLU 22-21	KL
3	ADDED OPT. 9' BASEMENT	JUL 22-21	KL
2	REVISED AS PER ENG'S COMMENTS	FEB 07-18	RC
1	ISSUED FOR CLIENT REVIEW	.	.

All drawings specifications, related documents and design are the copyright property of VA3 DESIGN. Reproduction of this property in whole or in part is strictly prohibited without VA3 DESIGN's written permission.

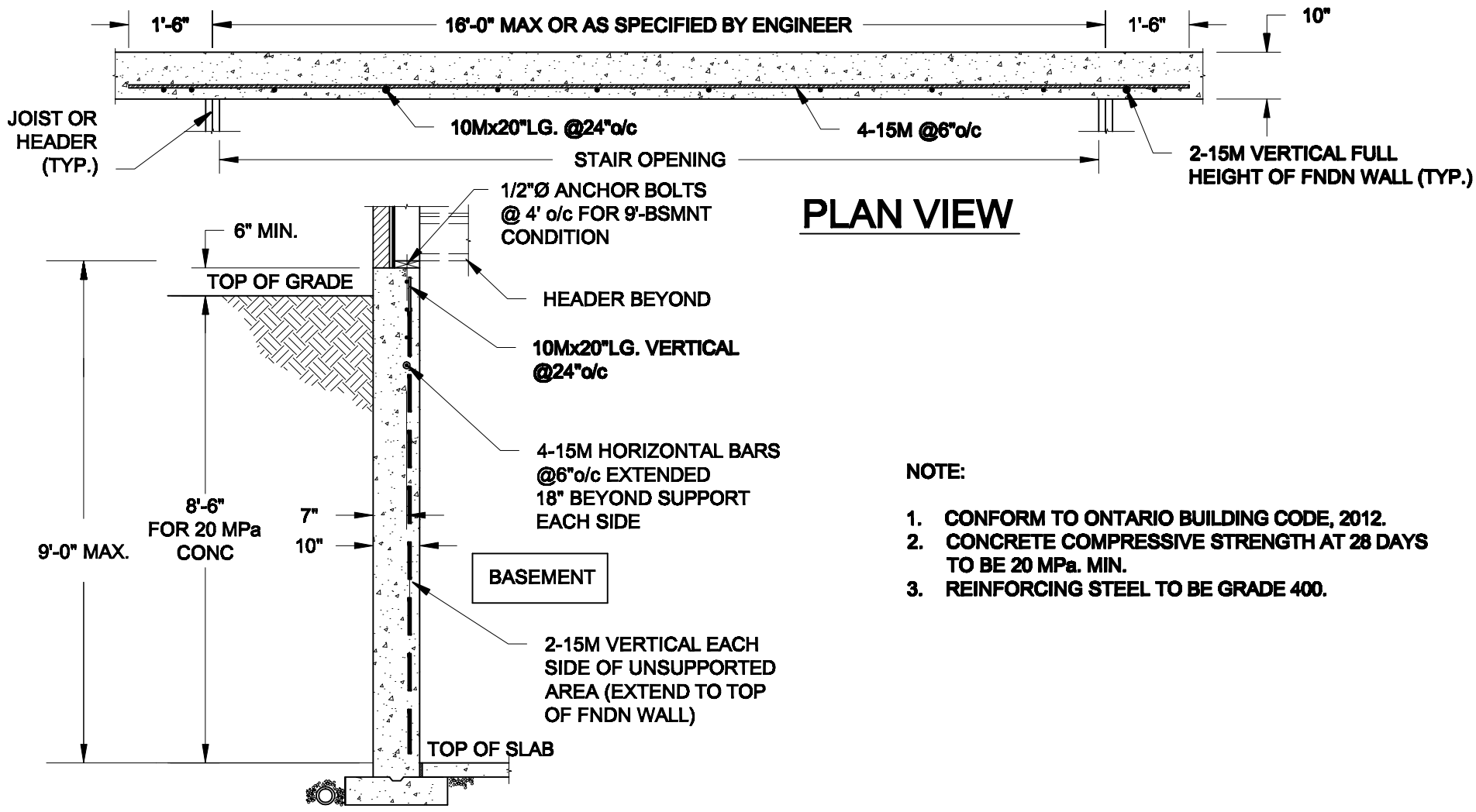

NOTE:

1. CONFORM TO ONTARIO BUILDING CODE, 2012.
2. CONCRETE COMPRESSIVE STRENGTH AT 28 DAYS TO BE 20 MPa. MIN.
3. REINFORCING STEEL TO BE GRADE 400.

1 / S1 LATERALLY UNSUPPORTED WALL

SCALE: 3/8" = 1'-0"

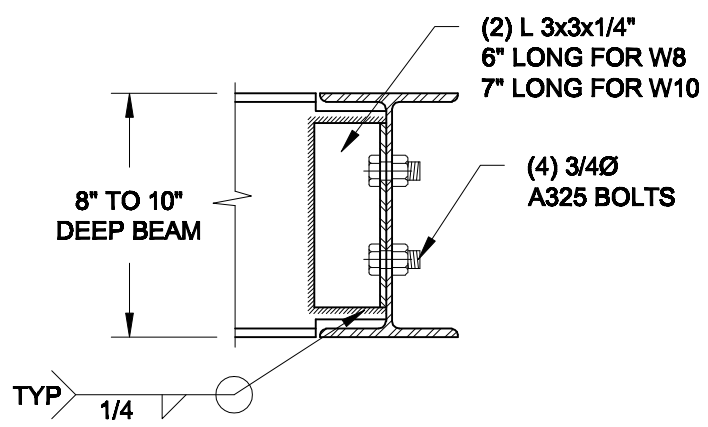

NOTE: DETAIL IS APPLICABLE TO W8x40 (W200x59) BEAM MAX AND W10x39 (W250x58) BEAM MAX.

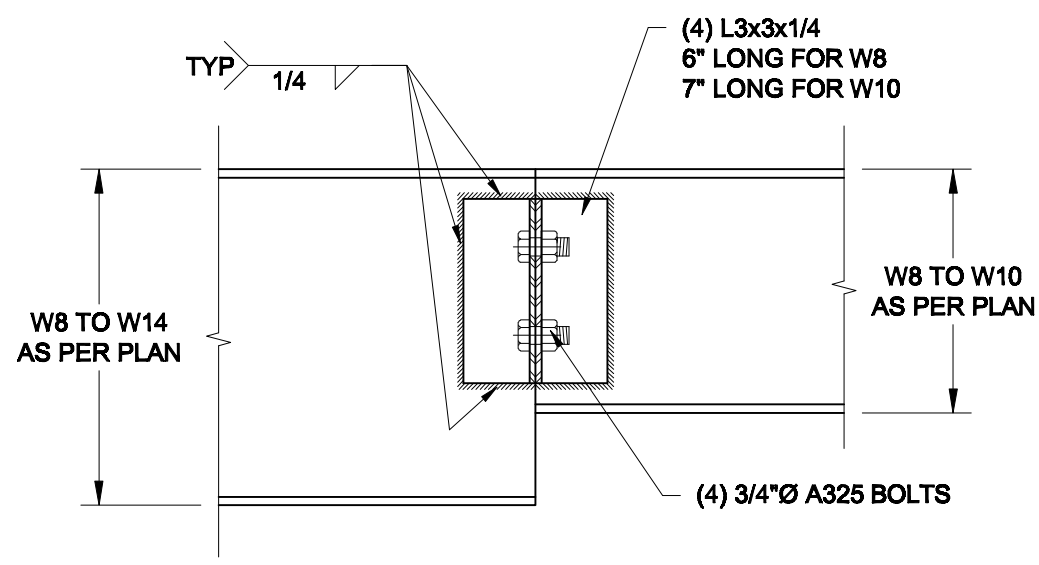

NOTE: DETAIL IS APPLICABLE TO W8x40 (W200x59) BEAM MAX AND W10x39 (W250x58) BEAM MAX.

SCALE: 1-1/2" = 1'-0"

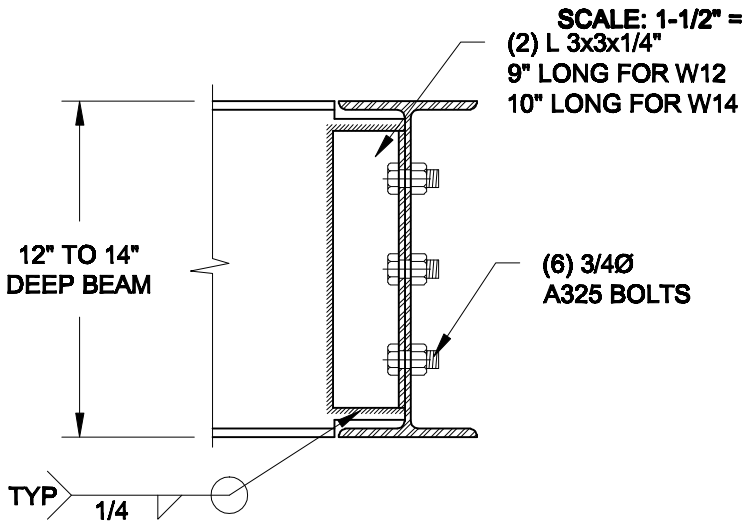

NOTE: DETAIL IS APPLICABLE TO W12x58 (W310x86) BEAM MAX AND W14x48 (W360x72) BEAM MAX.

2 / S1 STEEL BEAM CONNECTION DETAILS

Scale: AS NOTED	QUAILE ENGINEERING LTD.	Engineer's Seal: LICENSED PROFESSIONAL ENGINEER S. J. BOYD 90214198 PROVINCE OF ONTARIO FEB 17, 2022	Project: BAYVIEW WELLINGTON HOMES - GREEN VALLEY ESTATES - SINGLES BRADFORD, ONTARIO
Date: FEB-17-2022	38 Parkside Drive, UNIT 7 Newmarket, ON L3Y 8J9 T: 905-853-8547 E: quaile.eng@rogers.com		TYPICAL STRUCTURAL DETAILS
Drawn: SC / Checked: SJB			Project No.: 21-038 / Drawing No.: S1

P:\SamC-08\2021\21-038 BAYVIEW WELLINGTON GREEN VALLEY SINGLES\21-038.dwg

FOR 9 1/2" JOIST DEPTH

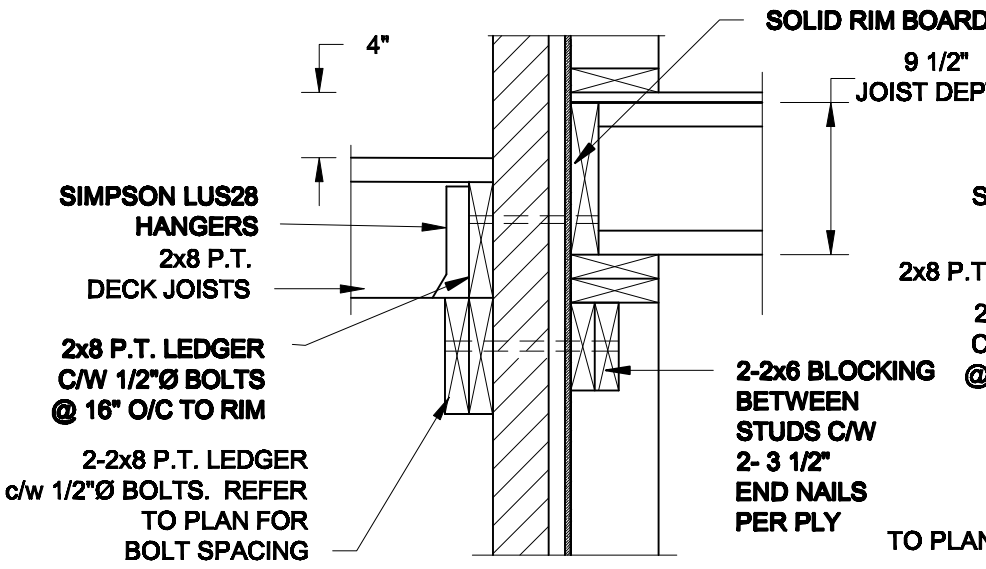

1A / S2 DECK FASTENING DETAIL

SCALE: 1" = 1'-0"

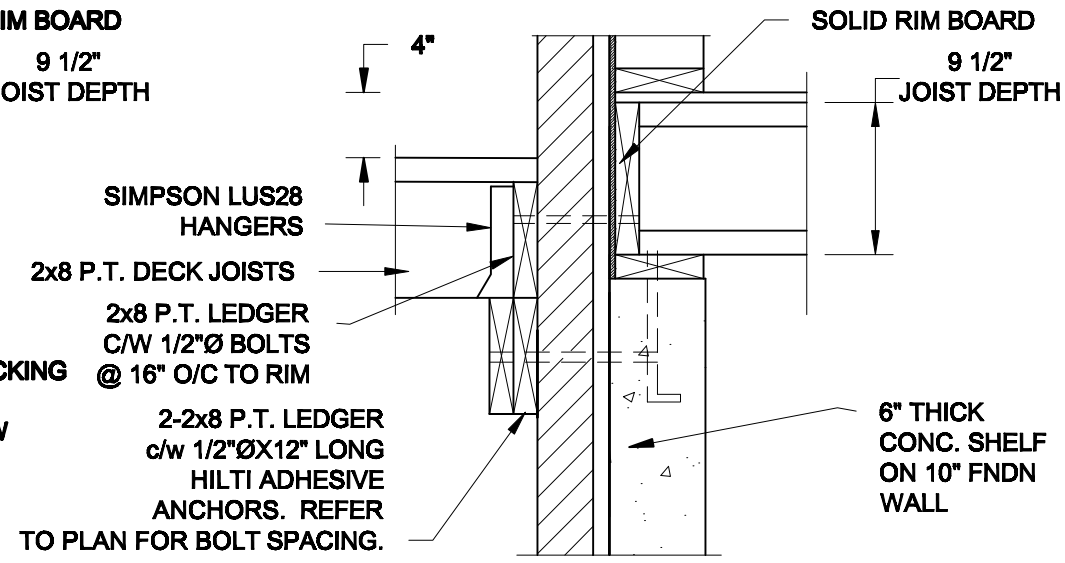

1B / S2 DECK FASTENING DETAIL

SCALE: 1" = 1'-0"

FOR 11 7/8" JOIST DEPTH

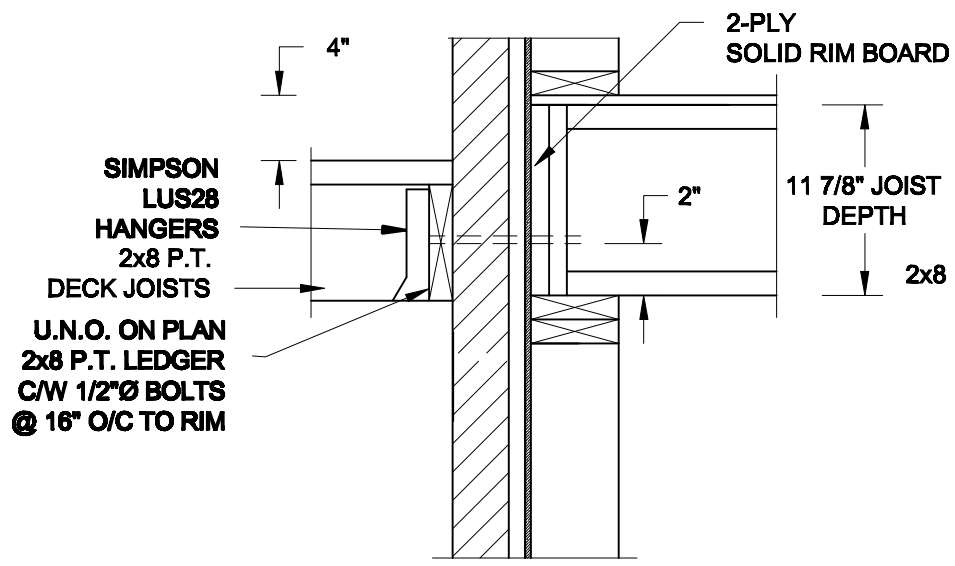

1C / S2 DECK FASTENING DETAIL

SCALE: 1" = 1'-0"

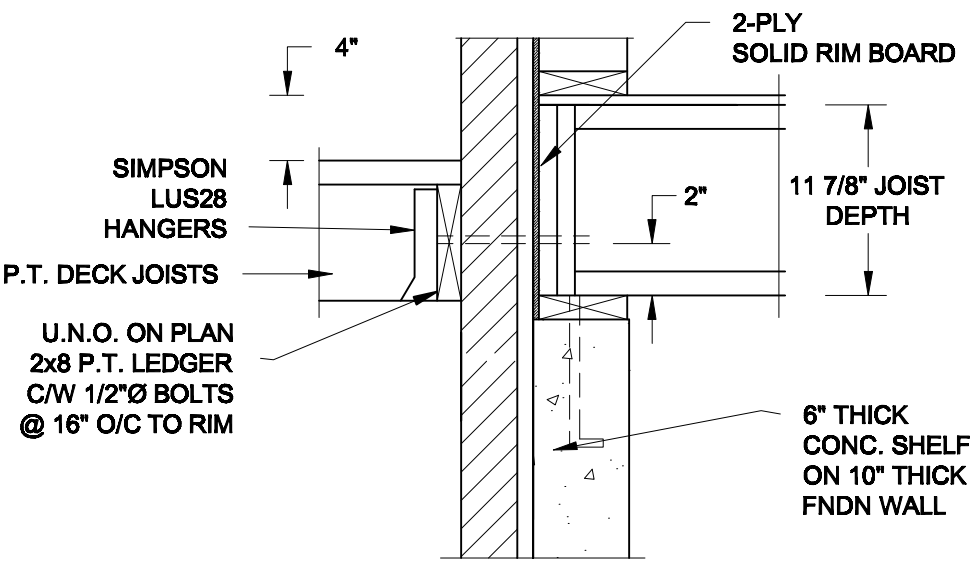

1D / S2 DECK FASTENING DETAIL

SCALE: 1" = 1'-0"

NOTE: 1. WHERE BACKFILL HEIGHT < 4'-7", PROVIDE 2x6 @ 16" o/c KNEEWALL ON 10" THICK CONC FNDN WALL
2. WHERE BACKFILL HEIGHT > 4'-7", PROVIDE 6" CONC SHELF FOR BRICK VENEER ON 10" THICK CONC FNDN WALL
3. FOOTING TO BE 22"x6" THICK UNLESS NOTED OTHERWISE ON PLAN.

FOR 9 1/2" JOIST DEPTH

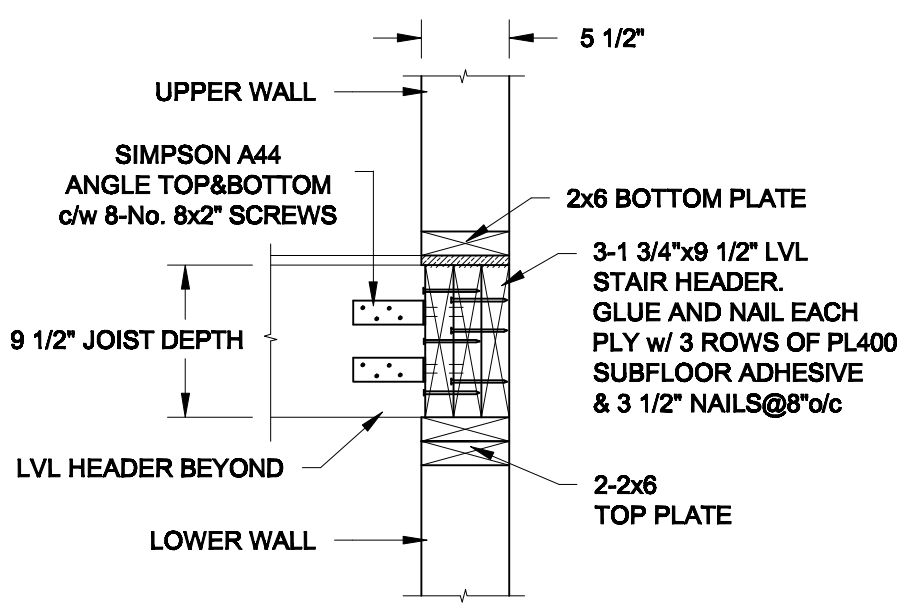

2A / S2 STAIR HEADER

SCALE: 1" = 1'-0"

FOR 11 7/8" JOIST DEPTH

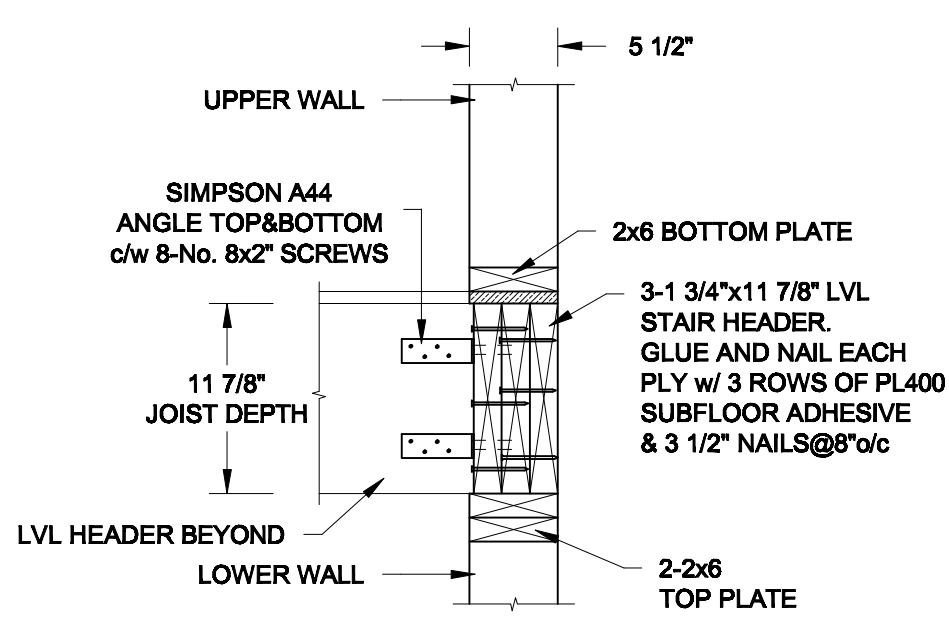

2B / S2 STAIR HEADER

SCALE: 1" = 1'-0"

Scale: AS NOTED	QUAILE ENGINEERING LTD.	Engineer's Seal: LICENSED PROFESSIONAL ENGINEER S. J. BOYD 90214198 PROVINCE OF ONTARIO MAR 30, 2021	Project: BAYVIEW WELLINGTON HOMES - GREEN VALLEY ESTATES - SINGLES BRADFORD, ONTARIO
Date: MAR-18-2021	38 Parkside Drive, UNIT 7 Newmarket, ON L3Y 8J9 T: 905-853-8547 E: quaile.eng@rogers.com		TYPICAL STRUCTURAL DETAILS
Drawn: SC / Checked: SJB			Project No.: 21-038 / Drawing No.: S2

P:\SamC-08\2021\21-038 BAYVIEW WELLINGTON GREEN VALLEY SINGLES\21-038.dwg

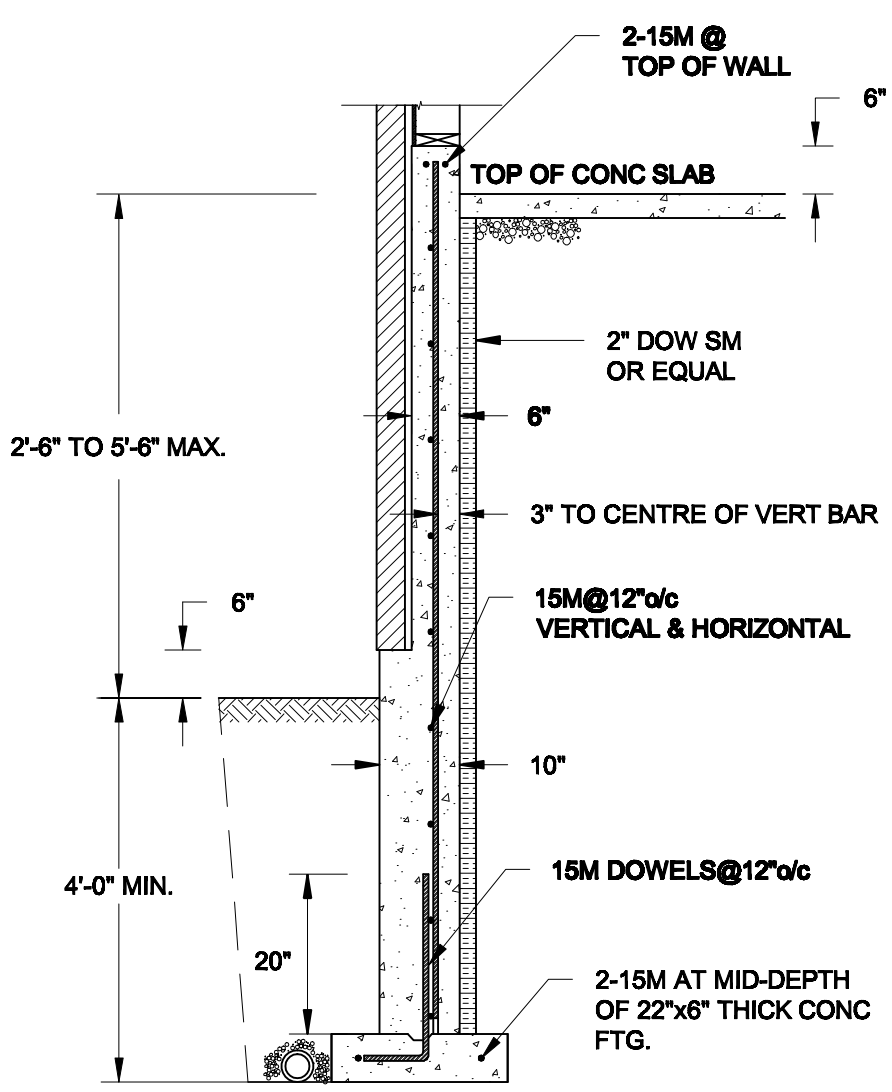

1A / S3 REINFORCED BRICKSHELF

SCALE: 1/2" = 1' - 0"

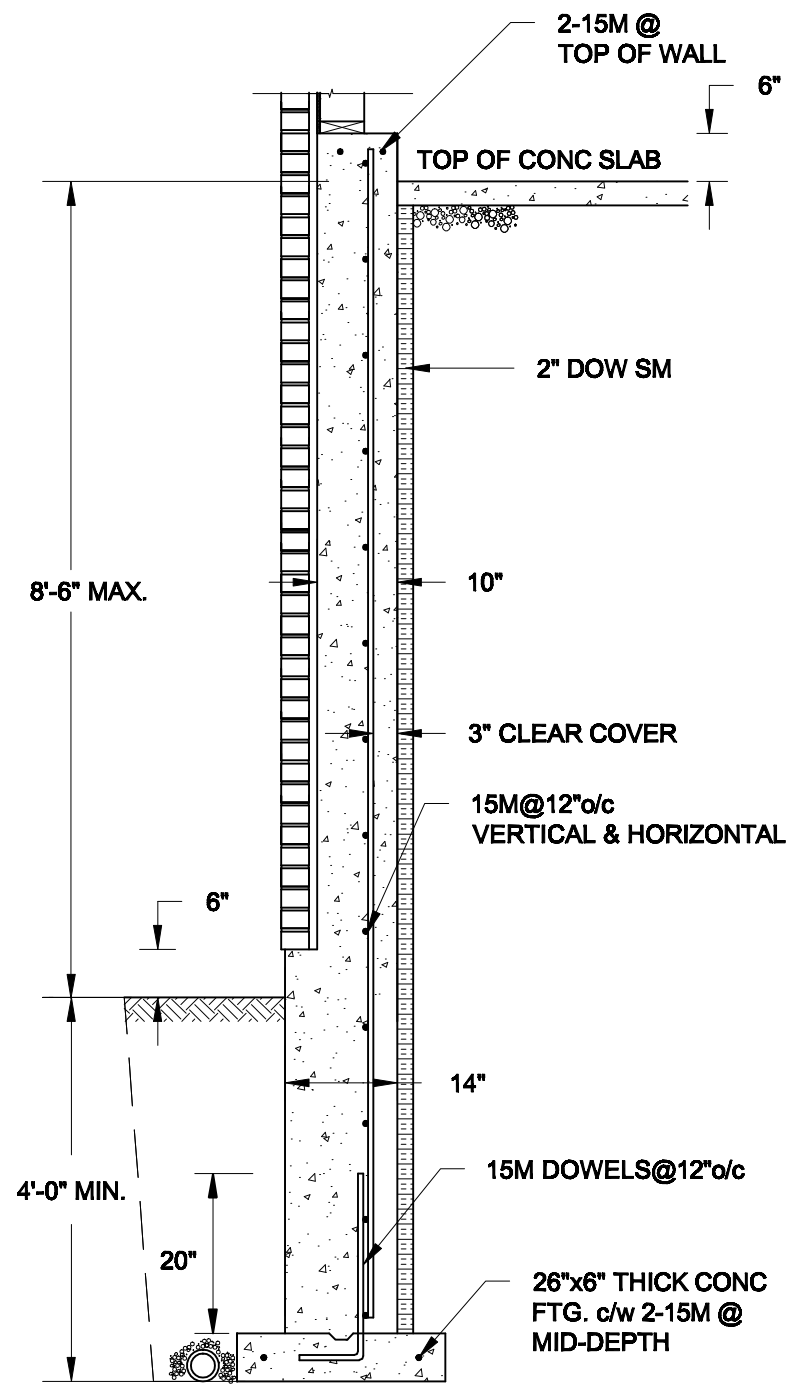

1B / S3 REINFORCED BRICKSHELF

SCALE: 1/2" = 1' - 0"

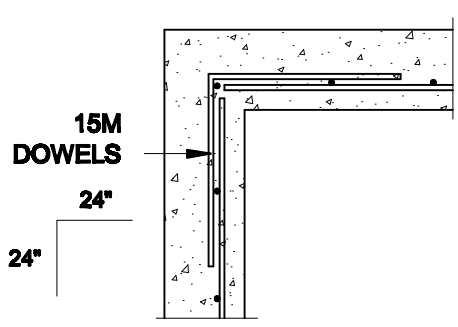

1C / S3 PLAN VIEW AT CORNER

SCALE: 1/2" = 1' - 0"

NOTES:

1. CONFORM TO THE ONTARIO BUILDING CODE, 2012.
2. CONCRETE TO HAVE A 28-DAY COMPRESSIVE STRENGTH OF 20 MPa.
3. REINFORCING STEEL TO BE GRADE 400.
4. LAP REINFORCING STEEL 24" AT SPLICES. PROVIDE 24"x24" L-SHAPE BARS AT ALL CORNERS - SEE DETAIL 1C/S3.
5. PROVIDE 3" COVER TO SOIL MINIMUM.
6. BACKFILL ASSUMED TO BE FREE-DRAINING MATERIAL AS PER PART 9 OF THE OBC.

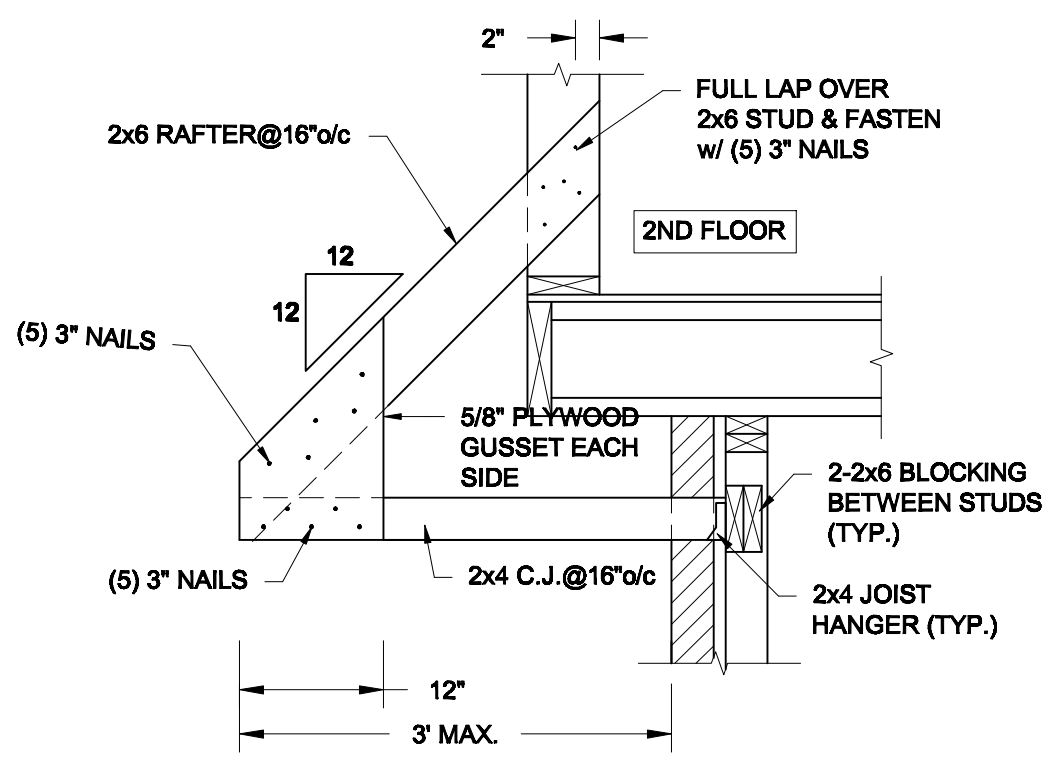

2 / S3 CANOPY ROOF OVER GARAGE

SCALE: 3/4" = 1'-0"

Scale: AS NOTED	QUAILE ENGINEERING LTD.	Engineer's Seal: LICENSED PROFESSIONAL ENGINEER S. J. BOYD 90214198 PROVINCE OF ONTARIO FEB 24, 2022	Project: BAYVIEW WELLINGTON HOMES - GREEN VALLEY ESTATES - SINGLES BRADFORD, ONTARIO
Date: FEB-24-2022	38 Parkside Drive, UNIT 7 Newmarket, ON L3Y 8J9 T: 905-853-8547 E: quaile.eng@rogers.com		TYPICAL STRUCTURAL DETAILS
Drawn: SC / Checked: SJB			Project No.: 21-038 / Drawing No.: S3

P:\SamC-06\2021\21-038 BAYVIEW WELLINGTON GREEN VALLEY SINGLES\21-038.dwg

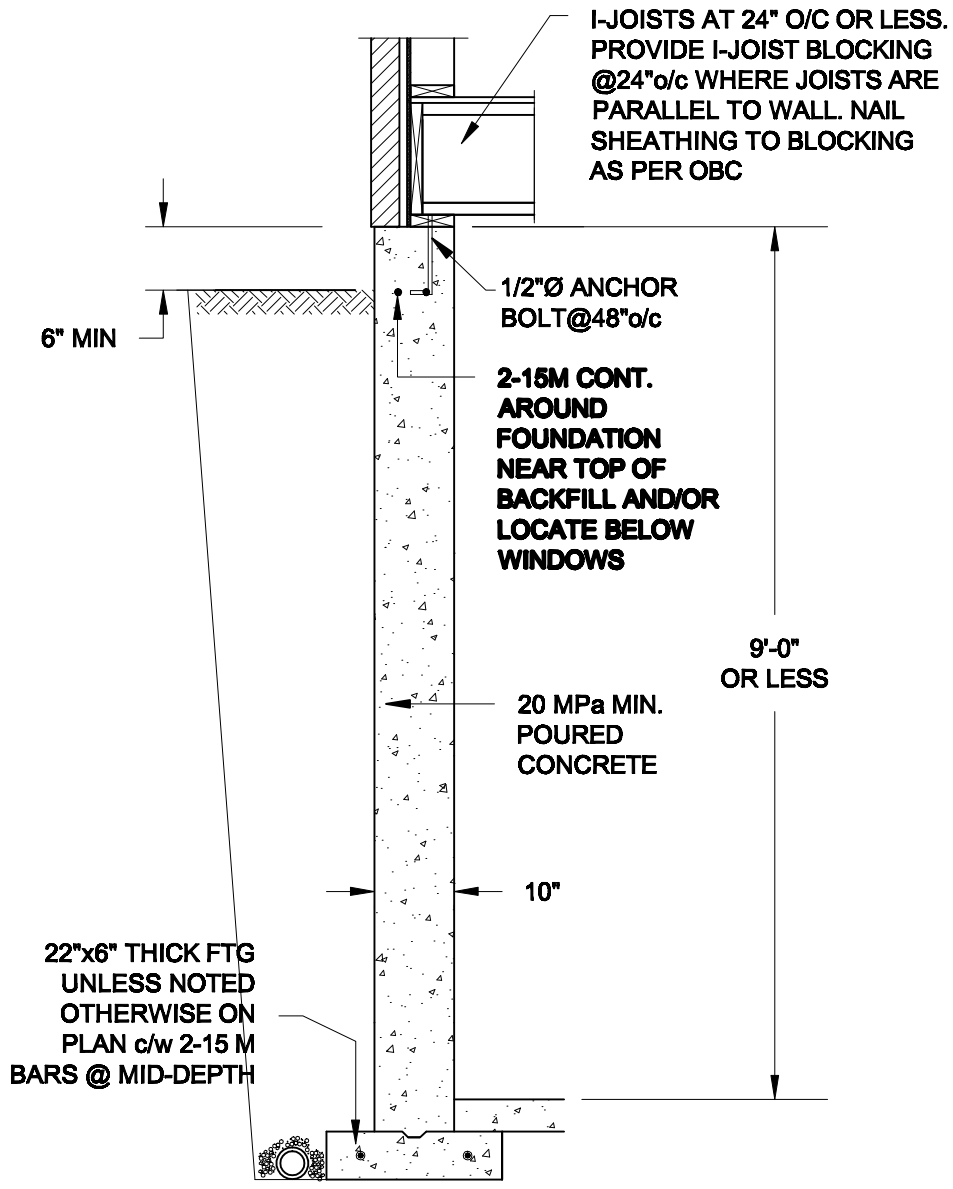

1A / S4 **FOUNDATION WALL**
SCALE: 1/2" = 1' - 0"

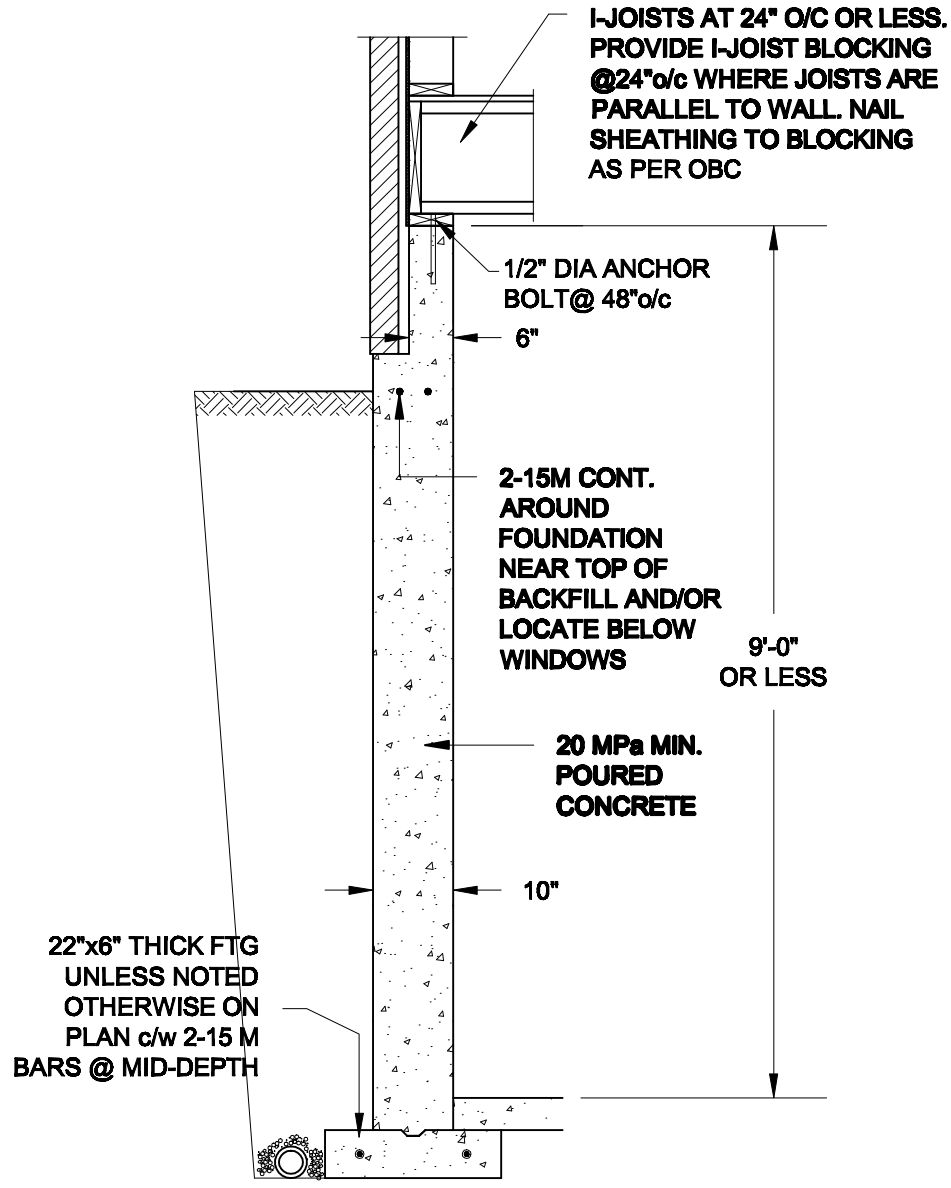

1B / S4 **DROPPED VENEER**
SCALE: 1/2" = 1' - 0"

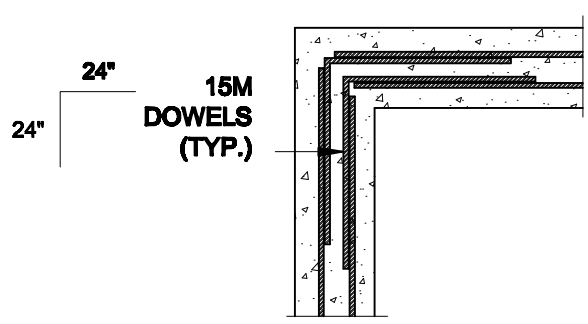

1C / S4 **TYP. PLAN VIEW AT CORNER**
SCALE: 1/2" = 1' - 0"

NOTE:
AT ALL WINDOW OPENINGS, PROVIDE 2-15M VERTICALLY AT EACH SIDE + 2-15M HORIZONTALLY 2" BELOW & EXTEND 24" BEYOND OPENING

NOTES:

1. CONFORM TO THE ONTARIO BUILDING CODE, 2012.
2. CONCRETE TO HAVE A 28 DAY COMPRESSIVE STRENGTH OF 20 MPa.
3. REINFORCING STEEL TO BE GRADE 400.
4. LAP REINFORCING STEEL 24" AT SPLICES. PROVIDE 24"x24" L-SHAPE BARS AT ALL CORNERS - SEE DETAIL 1C/S4.
5. BACKFILL ASSUMED TO BE FREE-DRAINING MATERIAL AS PER PART 9 OF THE OBC.
6. FOUNDATION IS FOR A PART 9 RESIDENTIAL BUILDING.
7. DETAIL IS APPLICABLE TO SITE CLASSES A TO D ONLY AS GIVEN IN TABLE 4.1.8.4.A OF THE OBC (TO BE CONFIRMED BY GEOTECHNICAL ENGINEER).

Scale: AS NOTED	QUAILE ENGINEERING LTD.	Engineer's Seal: LICENSED PROFESSIONAL ENGINEER S. J. BOYD 90214198 PROVINCE OF ONTARIO	Project: BAYVIEW WELLINGTON HOMES - GREEN VALLEY ESTATES - SINGLES BRADFORD, ONTARIO	
Date: MAR-15-2021	38 Parkside Drive, UNIT 7 Newmarket, ON L3Y 8J9 T: 905-853-8547 E: quaile.eng@rogers.com	MAR 30, 2021	TYPICAL STRUCTURAL DETAILS	
Drawn: SC / Checked: SJB			Project No.: 21-038	Drawing No.: S4

P:\SamC-08\2021\21-038 BAYVIEW WELLINGTON GREEN VALLEY SINGLES\21-038.dwg

CONSTRUCTION NOTES (Unless otherwise noted)

ALL CONSTRUCTION TO ADHERE TO THESE PLANS AND SPEC'S AND TO CONFORM TO THE ONTARIO BUILDING CODE AND ALL OTHER APPLICABLE CODES AND AUTHORITIES HAVING JURISDICTION. THESE REQUIREMENTS ARE TO BE TAKEN AS MINIMUM SPECIFICATIONS. ONT. REG. 332/12–2012 OBC

(1.) **ROOF CONSTRUCTION**
NO.210 (10.25kg/m2) ASPHALT SHINGLES, 10mm (3/8") PLYWOOD SHEATHING WITH "H" CLIPS. APPROVED WOOD TRUSSES @ 600mm (24") O.C. MAX. APPROVED EAVES PROTECTION TO EXTEND 900mm (3'-0") FROM EDGE OF ROOF AND MIN. 300mm (12") BEYOND INNER FACE OF EXTERIOR WALL, (EAVES PROTECTION NOT REQ'D FOR ROOF SLOPES 8:12 OR GREATER) 38x89 (2"x4") TRUSS BRACING @ 1830mm (6'-0") O.C. AT BOTTOM CHORD. PREFIN. ALUM.
♦ EAVESTROUGH, FASCIA, RWL & VENTED SOFFIT. PROVIDE ICE & WATER SHIELD TO ALL ROOF/WALL SURFACES SUSCEPTIBLE TO ICE DAMMING. ROOF SHEATHING TO BE FASTENED 150 (6") c/c ALONG EDGES & INTERMEDIATE SUPPORTS WHEN TRUSSES SPACED GREATER THAN 406 (16"). ATTIC VENTILATION 1:300 OF INSULATED CEILING AREA WITH MIN. 25% AT EAVES & MIN. 25% AT RIDGE (OBC 9.19.1.2.). ENSURE ALL OVERLAPPING ROOF SPACES ARE OPEN TO MAIN ROOF ATTIC SPACE FOR VENTING PURPOSES.

(2.) **FRAME WALL CONSTRUCTION (2"x6")** (SB–12–TABLE 3.1.1.2.A)
SIDING AS PER ELEV., 19x38 (1"x2") VERTICAL WOOD FURRING, CONTIN. SHEATHING MEMBRANE, 9.5mm (3/8") EXT. TYPE SHEATHING, 38x140 (2"x6") STUDS @ 400mm (16") O.C., RSI 3.87 (R22) INSULATION AND APPR. VAPOUR BARRIER AND APPR. CONTIN. AIR BARRIER, 13mm (1/2") INT. DRYWALL FINISH. SIDING TO BE MIN. 200mm (8") ABOVE FINISH GRADE. REFER TO OBC SB-12, CHAPTER 3 FOR ADDITIONAL THERMAL INSULATION REQUIREMENTS.

(2A.) RESERVED

(2B.) **FRAME WALL CONSTRUCTION (2"x4")– GARAGE WALLS**
SIDING AS PER ELEV., 19x38 (1"x2") VERTICAL WOOD FURRING, CONTIN. SHEATHING MEMBRANE, 9.5mm (3/8") EXT. TYPE SHEATHING, 38x89 (2"x4") STUDS @ 400mm (16") O.C. (MAX. HEIGHT 3000mm (9'-10"), WITH APPR. DIAGONAL WALL BRACING. SIDING TO BE MIN. 200mm (8") ABOVE FINISH GRADE.

(2C.) RESERVED

(2D.) **STUCCO WALL CONSTRUCTION (2"x4") –GARAGE WALLS**
STUCCO CLADDING SYSTEM CONFORMING TO O.B.C. 9.27.1.1.(2) & 9.28 THAT EMPLOY A MINIMUM 10mm AIR SPACE BEHIND THE CLADDING WITH POSITIVE DRAINAGE TO THE EXTERIOR AND APPLIED PER MANUFACTURERS SPECIFICATIONS OVER 25mm (1") MIN. EXPANDED OR EXTRUDED RIGID POLYSTYRENE ON APPROVED AIR/MOISTURE BARRIER ON 13mm (1/2") EXT. TYPE SHEATHING ON 38x89 (2"x4") STUDS @ 400 (16") O.C.. STUCCO TO BE MIN. 200 (8") ABOVE FINISH GRADE.

(2E.) **WALLS ADJACENT TO ATTIC SPACE – NO CLADDING**
9.5mm (3/8") EXT. TYPE SHEATHING, 38x140 (2"x6") STUDS @ 400mm (16") O.C., RSI 3.87 (R22) INSULATION AND APPR. VAPOUR BARRIER AND APPR. CONTIN. AIR BARRIER, 13mm (1/2") INTERIOR DRYWALL FINISH. MID-HEIGHT BLOCKING REQ'D. IF NO SHEATHING APPLIED. REFER TO OBC SB-12, CHAPTER 3 FOR ADDITIONAL THERMAL INSULATION REQUIREMENTS.

(3.) **MASONRY VENEER CONSTRUCTION (2"x6")** (SB–12–TABLE 3.1.1.2.A)
90mm (4") MASONRY, 25mm (1") AIR SPACE, 22x180x0.76mm (7/8"x7"x0.03") GALV. METAL TIES @ 400mm (16") O.C. HORIZONTAL 600mm (24") O.C. VERTICAL. APPROVED SHEATHING PAPER, 9.5mm (3/8") EXT. TYPE SHEATHING, 38x140 (2"x6") STUDS @ 400mm (16") O.C., RSI 3.87 (R22) INSULATION & APPR. VAPOUR BARRIER WITH APPR. CONTIN. AIR BARRIER. 13mm (1/2") INTERIOR DRYWALL FINISH. PROVIDE WEEP HOLES @ 800mm (32") O.C. BOTTOM COURSE AND OVER OPENINGS. PROVIDE BASE FLASHING UP MIN. 150mm (6") BEHIND BUILDING PAPER. REFER TO OBC SB-12, CHAPTER 3 FOR ADDITIONAL THERMAL INSULATION REQUIREMENTS.
MASONRY TO BE MIN. 150mm (6") ABOVE FINISH GRADE.

(3A.) RESERVED

(3B.) **MASONRY VENEER CONSTRUCTION (2"x4")– GARAGE WALLS**
90mm (4") MASONRY, 25mm (1") AIR SPACE, 22x180x0.76mm (7/8"x7"x0.03") GALV. METAL TIES @ 400mm (16") O.C. HORIZONTAL 600mm (24") O.C. VERTICAL. APPR. SHEATHING PAPER, 9.5mm (3/8") EXT. TYPE SHEATHING, 38x89 (2"x4") STUDS @ 400mm (16") O.C. (MAX. HEIGHT 3000mm 9'-10") WITH APPR. DIAGONAL WALL BRACING. PROVIDE WEEP HOLES @ 800mm (32") O.C. BOTTOM COURSE AND OVER OPENINGS. PROVIDE BASE FLASHING UP MIN. 150mm (6") BEHIND BUILDING PAPER.
MASONRY TO BE MIN. 150mm (6") ABOVE FINISH GRADE.

(3C.) **STUCCO WALL CONSTRUCTION (2"x6")** (SB–12–TABLE 3.1.1.2.A)
STUCCO CLADDING SYSTEM CONFORMING TO O.B.C. 9.27.1.1.(2) & 9.28 THAT EMPLOYS A MINIMUM 10mm AIR SPACE BEHIND THE CLADDING WITH POSITIVE DRAINAGE TO THE EXTERIOR AND APPLIED PER MANUFACTURERS SPECIFICATIONS OVER 25mm (1") MIN. EXTRUDED OR EXPANDED RIGID POLYSTYRENE ON APPR. CONTIN. AIR/MOISTURE BARRIER ON 13mm (1/2") EXT. TYPE SHEATHING ON 38x140 (2"x6") STUDS @ 400mm (16") O.C., RSI 3.87(R22) INSULATION, APPROVED VAPOUR BARRIER, 13mm (1/2") GYPSUM WALLBOARD INTERIOR FINISH. REFER TO OBC SB-12, CHAPTER 3 FOR ADDITIONAL THERMAL INSULATION REQUIREMENTS. STUCCO TO BE MIN. 200 (8") ABOVE FINISH GRADE.

(4.) **INTERIOR STUD PARTITIONS**
FOR BEARING PARTITIONS 38x89 (2"x4") @ 400mm (16") O.C. FOR 2 STOREYS AND 300mm (12") O.C. FOR 3 STOREYS, NON-BEARING PARTITIONS 38x89 (2"x4") @ 600mm (24") O.C. PROVIDE 38x89 (2"x4") BOTTOM PLATE AND 2/38x89 (2/2"x4") TOP PLATE. 13mm (1/2") INT. DRYWALL BOTH SIDES OF STUDS, PROVIDE 38x140 (2"x6") STUDS/PLATES WHERE NOTED.

(5.) **FOUNDATION WALL/FOOTINGS:**
250mm (10") POURED CONC. FDTN. WALL 20MPa (2900psi) WITH BITUMENOUS DAMPPROOFING AND DRAINAGE LAYER. DRAINAGE LAYER REQ'D. WHEN BASEMENT INSUL. EXTENDS 900 (2'-11") BELOW FIN. GRADE. DRAINAGE LAYER IS NOT REQ'D. WHEN FDTN. WALL IS WATERPROOFED. MAXIMUM POUR HEIGHT 2820 (9'-3") ON 560x155 (22"x6") CONTINUOUS KEYED CONC. FTG. BRACE FDTN. WALL PRIOR TO BACKFILLING. ALL FOOTINGS SHALL REST ON NATURAL UNDISTURBED SOIL OR COMPACTED ENGINEERED FILL, WITH MIN. BEARING CAPACITY OF 150kPa OR GREATER. IF SOIL BEARING DOES NOT MEET MINIMUM CAPACITY, ENGINEERED FOOTINGS ARE REQUIRED.

STOREYS SUPPORTED	W/ MASONRY VENEER	W/ SIDING ONLY
1	18" WIDE x 6" DEEP	18" WIDE x 6" DEEP
2	22" WIDE x 6" DEEP	22" WIDE x 6" DEEP
3	28" WIDE x 9" DEEP	22" WIDE x 6" DEEP

-SEE OBC 9.15.3.
-MAXIMUM FLOOR LIVE LOAD OF 2.4kPa. (50psf.) PER FLOOR, AND MAX. LENGTH OF SUPPORTED FLOOR JOISTS IS 4.9m (16'-1").
-REFER TO SOILS REPORT FOR SOIL CONDITIONS AND BEARING CAPACITY.

STRIP FOOTING SUPPORTING EXTERIOR WALLS (FOR W.O.B.)
-ASSUMING MASONRY VENEER CONSTRUCTION, MAX. FLOOR LIVE LOAD OF 2.4kPa. (50psf.) PER FLOOR, AND MAX. LENGTH OF SUPPORTED FLOOR JOISTS IS 4.9m (16'-1"). THE STRIP FOOTING SIZE IS AS FOLLOWS:
2 STOREY WITH WALK-OUT BASEMENT 545x175 (22"x7")

(6.) **FOUNDATION DRAINAGE** OBC. 9.14.2. & 9.14.3.
100mm (4") DIA. FOUNDATION DRAINAGE TILE 150mm (6") CRUSHED STONE OVER AND AROUND DRAINAGE TILES.

(7.) **BASEMENT SLAB** OBC. 9.3.1.6.(1)(b), 9.16.4.5.(1), 9.25.3.3.(15)
80mm (3")MIN. 25MPa (3600psi) CONC. SLAB ON 100mm (4") COARSE GRANULAR FILL, OR 20MPa. (3000psi) CONC. WITH DAMPPROOFING BELOW SLAB. UNDER SLAB INSULATION PER SB-12. ALL SLAB JOINTS & PENETRATIONS TO BE CAULKED.

(8.) **EXPOSED FLOOR TO EXTERIOR** (SB–12–TABLE 3.1.1.2.A)
PROVIDE RSI 5.46 (R31) INSULATION, APPROVED VAPOUR BARRIER AND CONTINUOUS AIR BARRIER, FINISHED SOFFIT.

(9.) **ATTIC INSULATION** (SB–12–TABLE 3.1.1.2.A) (SB–12–3.1.1.8)
RSI 10.56 (R60) BLOWN IN ROOF INSULATION AND APPROVED VAPOUR BARRIER, 16mm (5/8") INT. DRYWALL FINISH OR APPROVED EQUAL. RSI 3.52 (R20) MIN. ABOVE INNER SURFACE OF EXTERIOR WALL

(10.) **ALL STAIRS/EXTERIOR STAIRS –OBC. 9.8.– (PRIVATE STAIRS)**
UNIFORM RISE -5mm (1/4") MAX BETWEEN ADJACENT TREADS OR LANDINGS
-10mm (3/8") MAX BETWEEN TALLEST & SHORTEST RISE IN FLIGHT

MAX. RISE	= 200 (7-7/8")
MIN. RUN	= 255 (10") *(NOSING TO NOSING)*
♦ MAX. TREAD	= RUN + 25 (1")
MAX. NOSING	= 25 (1")
MIN. HEADROOM	= 1950 (6'-5")
RAIL @ LANDING	= 900 (2'-11")
RAIL @ STAIR	= 865 (2'-10") to 1070 (3'-6")
MIN. STAIR WIDTH	= 860 (2'-10")

FOR CURVED STAIRS (TAPERED TREADS)

MIN. RUN AT INNER RADIUS	= 150 (6")
MIN. RUN AT 300 (12")	= 255 (10")

(11.) **HANDRAILS –OBC. 9.8.7.–**
FINISHED RAILING ON PICKETS SPACED MAXIMUM 100mm (4") BETWEEN PICKETS. CLEARANCE BETWEEN HANDRAIL AND SURFACE BEHIND IT TO BE 50 (2") MIN. HANDRAILS TO BE CONTINUOUS EXCEPT FOR NEWEL POST AT CHANGES OF DIRECTION .

INTERIOR GUARDS –OBC. 9.8.8.–
INTERIOR GUARDS: 900mm (2'-11") MIN. HIGH

EXTERIOR GUARDS – OBC. 9.8.8.
900mm (36") HIGH GUARD WHERE DISTANCE FROM PORCH TO FIN. GRADE IS LESS THAN 1800mm (71"). 1070mm (42") HIGH GUARD IS REQUIRED WHERE DISTANCE EXCEEDS 1800mm (71").

(12.) **SILL PLATE – OBC. 9.23.7.**
38x89 (2"x4") SILL PLATE WITH 13mm (1/2") DIA. ANCHOR BOLTS 200mm (8") LONG, EMBEDDED MIN. 100mm (4") INTO CONC. @ 2400mm (7'-10") O.C., CAULKING OR 25 (1") MIN. MINERAL WOOL BETWEEN PLATE AND TOP OF FDTN. WALL.
USE NON-SHRINK GROUT TO LEVEL SILL PLATE WHEN REQUIRED.

(13.) **BASEMENT INSULATION** (SB–12–3.1.1.7), 9.25.2.3, 9.13.2.6)
FOUNDATION WALLS ENCLOSING HEATED SPACE SHALL BE INSULATED FROM THE UNDERSIDE OF THE SUBFLOOR TO NOT MORE THAN 200mm (8") ABOVE THE FINISHED FLOOR & NO CLOSER THAN 50mm (2") OF THE BASEMENT SLAB. RSI3.52ci (R20ci) BLANKET INSULATION TO HAVE APPROVED VAPOUR BARRIER. RECOMMEND DAMPPROOF WITH BUILDING PAPER BETWEEN THE FOUNDATION WALL AND INSULATION UP TO GRADE LEVEL. NOTE: FULL HEIGHT INSULATION AT COLD CELLAR WALLS. AIR BARRIER TO BE SEALED TO FOUNDATION WALL WITH CAULKING. CONTINUOUS INSULATION (ci) IS NOT TO BE INTERRUPTED BY FRAMING.

(14.) **BEARING STUD PARTITION**
38x89 (2"x4") STUDS @ 400mm (16") O.C. 38x89 (2"x4") SILL PLATE ON DAMPPROOFING MATERIAL, 13mm (1/2") DIA. ANCHOR BOLTS 200mm (8") LONG, EMBEDDED MIN. 100mm (4") INTO CONC. @ 2400mm (7'-10") O.C. 100mm (4") HIGH CONC. CURB ON 350x155 (14"x6") CONC. FOOTING. ADD HORIZ. BLOCKING AT MID-HEIGHT IF WALL IS UNFINISHED.

(15.) **STEEL BASEMENT COLUMN** (SEE O.B.C. 9.15.3.3)
89mm(3-1/2") DIA x 3.0mm(0.118) SINGLE WALL TUBE TYPE 2 ADJUSTABLE STL. COL. W/ MIN. CAPACITY OF 71.2kN (16,000lbs.) AT A MAX. EXTENSION OF 2318mm (7'-7 1/2") CONFORMING TO CAN/CGSB-7.2-94, AND WITH 150x150x9.5 (6"x6"x3/8") STL. PLATE TOP & BOTTOM. 870x870x410 (34"x34"x16") CONC. FOOTING ON UNDISTURBED SOIL OR ENGINEERED FILL CAPABLE OF SUSTAINING A PRESSURE OF 150 Kpa. MINIMUM AND AS PER SOILS REPORT.

(15A) **STEEL BASEMENT COLUMN (SEE O.B.C. 9.15.3.3)**
89mm(3-1/2") DIA x 4.78mm(.188) FIXED STL. COL. WITH 150x150x9.5 (6"x6"x3/8") STL. TOP & BOTTOM PLATE ON 1070x1070x460 (42"x42"x18"). CONC. FOOTING ON UNDISTURBED SOIL OR ENGINEERED FILL CAPABLE OF SUSTAINING A PRESSURE OF 150 Kpa. MIN. AND AS PER SOILS REPORT.

(15B) **STEEL COLUMN**
90mm(3-1/2") DIA x 4.78mm(.188) NON-ADJUSTABLE STL. COL. TO BE ON 150x150x9.5 (6"x6"x3/8") STEEL TOP PLATE, & BOTTOM PLATE. BASE PLATE 120x250x12.5 (4 1/2"x10"x1/2") WITH 2-12mm DIA. x 300mm LONG x50mm HOOK ANCHORS (2-1/2"x12"x2") FIELD WELD COL. TO BASE PLATE.

(16.) BEAM POCKET OR 300x150 (12"x6") POURED CONC. NIB WALLS. MIN. BEARING 90mm (3-1/2")

(17.) 19x64 (1"x3") CONTINUOUS WOOD STRAPPING BOTH SIDES OF STEEL BEAM.

(18.) **GARAGE SLAB**
100mm (4") 32MPa (4640psi) CONC. SLAB WITH 5-8% AIR ENTRAINMENT ON OPT. 100 (4") COARSE GRANULAR FILL WITH COMPACTED SUB-BASE OR COMPACTED NATIVE FILL. SLOPE TO FRONT.

(19.) **GARAGE CEILINGS/INTERIOR WALLS**
13mm (1/2") GYPSUM BOARD ON WALL AND CEILING BETWEEN HOUSE AND GARAGE. TAPE AND SEAL ALL JOINTS AIRTIGHT PER O.B.C. 9.10.9.16. WALLS (R22), CEILINGS (R31). REFER TO SB-12, TABLE 3.1.1.2.A. FOR REQUIRED THERMAL INSULATION.

(20.) DOOR AND FRAME GASPROOFED. DOOR EQUIPPED WITH SELF CLOSING DEVICE AND WEATHERSTRIPPING PER OBC 9.10.13.15.

(21.) **EXTERIOR STEP**
PRECAST CONCRETE STEP OR WOOD STEP WHERE NOT EXPOSED TO WEATHER. MAX. RISE 200mm (7-7/8") MIN. TREAD 250mm (9-1/2"). SEE OBC. 9.8.9.2., 9.8.9.3. & 9.8.10.

(22.) **DRYER EXHAUST** (OBC–6.2.3.8.(7) & 6.2.4.11.)
CAPPED DRYER EXHAUST VENTED TO EXTERIOR.
(USE 100mm (4") DIA. SMOOTH WALL VENT PIPE)

(23.) **INSULATED ATTIC ACCESS** (OBC–9.19.2.1. & SB12–3.1.1.8)
ATTIC ACCESS HATCH WITH MIN. DIMENSION OF 545x610mm (21 1/2"x24") & A MIN. AREA OF 0.32 SQ.M. (3.44 SQ.FT.) WITH WEATHERSTRIPPING. RSI 3.52 (R20) RIGID INSUL. BACKING.

(24.) **FIREPLACE CHIMNEYS** OBC. 9.21.
TOP OF FIREPLACE CHIMNEY SHALL BE 915mm (3'-0") ABOVE THE HIGHEST POINT AT WHICH IT COMES IN CONTACT WITH THE ROOF AND 610mm (2'-0") ABOVE THE ROOF SURFACE WITHIN A HORIZ. DISTANCE OF 3050mm (10'-0") FROM THE CHIMNEY.

(25.) LINEN CLOSET, 4 SHELVES MIN. 350mm (14") DEEP.

(26.) MECHANICAL EXHAUST FAN, VENTED TO EXTERIOR AS REQUIRED BY OBC. 9.32.3.5. & 9.32.3.10.

(27.) **STEEL BEARING PLATE FOR MASONRY WALLS**
280x280x16 (11"x11"x5/8") STL. PLATE FOR STL BEAMS AND 280x280x12 (11"x11"x1/2") STL. PLATE FOR WOOD BEAMS BEARING ON CONC. BLOCK PARTYWALL, ANCHORED WITH 2-19mm (3/4") x 200mm (8") LONG GALV. ANCHORS WITHIN SOLID BLOCK COURSE. LEVEL WITH NON-SHRINK GROUT.
OR
SOLID WOOD BEARING FOR WOOD STUD WALLS
SOLID BEARING TO BE AT LEAST AS WIDE AS THE SUPPORTED MEMBER. SOLID WOOD BEARING COMPRISED OF BUILT-UP WOOD STUDS TO BE CONSTRUCTED IN ACCORDANCE WITH OBC 9.17.4.2(2).

(28.) RESERVED

(29.) **BEARING WOOD POST (BASEMENT) (OBC 9.17.4.)**
3-38x140 (3-2"x6") BUILT-UP-POST ON METAL BASE SHOE ANCHORED TO CONC. WITH 12.7 DIA. BOLT, 610x610x300 (24"x24"x12") CONC. FOOTING.

(30.) **STEPPED FOOTINGS OBC 9.15.3.9.**
MIN. HORIZ. STEP = 600mm (24").
MAX. VERT. STEP = 600mm (24")

(31.) **SLAB ON GRADE**
MIN. 100mm (4") CONCRETE SLAB ON GRADE ON 100mm (4") COARSE GRANULAR FILL. REINFORCED WITH 6x6-W2.9xW2.9 MESH PLACED NEAR MID-DEPTH OF SLAB. CONC. STRENGTH 32 MPa (4640 psi) WITH 5-8% AIR ENTRAINMENT ON COMPACTED SUB-GRADE. WHERE REQUIRED, REFER TO OBC SB-12, TABLE 3.1.1.2.A. FOR REQUIRED MINIMUM INSULATION UNDER SLAB.

(32.) **DIRECT VENTING GAS FURNACE/ H.W.T VENT**
DIRECT VENT FURNACE TERMINAL MIN. 900mm (36") FROM A NATURAL GAS REGULATOR, MIN. 300mm (12") ABOVE FIN. GRADE, FROM ALL OPENINGS, EXHAUST AND INTAKE VENTS. HRV INTAKE TO BE A MIN. OF 1830mm (6'-0") FROM ALL EXHAUST TERMINALS. REFER TO GAS UTILIZATION CODE. ALL AIR INTAKES SHALL BE LOCATED SO THAT THEY ARE SEPARATED FROM KITCHEN EXHAUST BY 3.0M IN COMPLIANCE WITH O.B.C. DIV.-B TABLE 6.2.3.12..

(33.) **DIRECT VENTING GAS FIREPLACE VENT**
DIRECT VENT GAS FIREPLACE. VENT TO BE A MINIMUM 300mm (12") FROM ANY OPENING AND ABOVE FIN. GRADE. REFER TO GAS UTILIZATION CODE.

(34.) **SUBFLOOR, JOIST STRAPPING AND BRIDGING**
16mm (5/8") T & G SUBFLOOR ON WOOD FLOOR JOISTS. FOR CERAMIC TILE APPLICATION (* SEE OBC 9.30.6. *) 6mm (1/4") PANEL TYPE UNDERLAY UNDER RESILIENT & PARQUET FLOORING. (* SEE OBC 9.30.2.*). FLOOR JOISTS WITH SPANS OVER 2100mm (6'-11") TO BE BRIDGED WITH 38x38 (2"x2") CROSS BRACING OR SOLID BLOCKING @ 2100mm (6'-11") O.C. MAX. AND WHERE SPECIFIED BY JOIST TABLES A-1 OR A-2 STRAPPING SHALL BE 19x64 (1"x3") @ 2100mm (6'-11") O.C. UNLESS A PANEL TYPE CEILING FINISH IS APPLIED. (* SEE OBC 9.23.9.4. *)

(35.) **EXPOSED BUILDING FACE** OBC. 9.10.15. & SB–2–2.3.5.(2)
EXTERIOR WALLS TO HAVE A FIRE RESISTANCE RATING OF NOT LESS THAN 45 min. WHERE LIMITING DISTANCE (LD) IS LESS THAN 1.2M (3'-11"). WHERE THE LD IS LESS THAN 600mm (1'-11") THE EXPOSING FACE SHALL BE CLAD IN NON-COMBUSTIBLE MATERIAL. SEE ELEVATIONS FOR ADDITIONAL NOTES. OFFENDING GARAGE WALLS INCLUDED.

(36.) **COLD CELLAR PORCH SLAB (OBC 9.39.)**
FOR MAX. 2500mm (8'-2") PORCH DEPTH (SHORTEST DIM.), 125mm (5") 32MPa (4640psi) CONC. SLAB WITH 5-8% AIR ENTRAINMENT. REINF. WITH 10M BARS @ 200mm (7 7/8") O.C. EACH WAY IN BOTTOM THIRD OF SLAB, MIN. 30mm (1 1/4") COVER, 600x600 (23 5/8"x23 5/8") 10M DOWELS @ 600mm (23 5/8") O.C., ANCHORED IN PERIMETER FDTN. WALLS. SLOPE SLAB MIN. 1.0% FROM HOUSE WALL. SLAB TO HAVE MIN. 75mm (3") BEARING ON FDTN. WALLS. PROVIDE (L7) LINTEL OVER CELLAR DOOR WITH 100mm (4") END BEARING.

(37.) THE FDTN. WALL SHALL NOT BE REDUCED TO LESS THAN 90mm (3-1/2") THICK TO A MAX. DEPTH OF 600mm (24") AND SHALL BE TIED TO THE FACING MATERIAL WITH METAL TIES SPACED 200mm (8") O.C. VERTICALLY AND 900mm (36") O.C. HORIZONTALLY. FILL SPACE BETWEEN WALL AND FACING SOLID WITH MORTAR.

(38.) **CONVENTIONAL ROOF FRAMING (2.0Kpa. SNOW LOAD)**
38x140 (2"x6") RAFTERS @ 400mm (16"O.C.) FOR MAX 11'-7" SPAN, 38x184 (2"x8") RIDGE BOARD. 38x89 (2"x4") COLLAR TIES AT MIDSPANS. CEILING JOISTS TO BE 38x89 (2"x4") @ 400mm (16") O.C. FOR MAX. 2830mm (9'-3") SPAN & 38x140 (2"x6") @ 400 (16") O.C. FOR MAX. 4450mm (14'-7") SPAN.
RAFTERS FOR BUILT-UP ROOF TO BE 38x89 (2"x4") @ 600mm (24") O.C. WITH A 38x89 (2"x4") CENTRE POST TO THE TRUSS BELOW, LATERALLY BRACED @ 1800mm (6'-0") O.C. VERTICALLY.

GENERAL NOTES

WINDOWS:
1) MINIMUM BEDROOM WINDOW –OBC. 9.9.10.1.–
AT LEAST ONE BEDROOM WINDOW ON A GIVEN FLOOR IS TO HAVE MIN. 0.35m2 UNOBSTRUCTED GLAZED OR OPENABLE AREA WITH MIN. CLEAR WIDTH OF 380 mm (1'-3").
2) WINDOW GUARDS –OBC. 9.8.8.1.(6).
A GUARD IS REQUIRED WHERE THE TOP OF THE WINDOW SILL IS LOCATED LESS THAN 480mm (1'-7") ABOVE FIN. FLOOR AND THE DISTANCE FROM THE FIN. FLOOR TO THE ADJACENT GRADE IS GREATER THAN 1800mm (5'-11")
3) EXTERIOR WINDOWS
SHALL COMPLY WITH OBC DIV.-B 9.7.3. & SB12-3.1.1.9
4) GLASS–STRUCTURAL SUFFICIENCY OF GLASS
DOOR & WINDOW MANUFACTURER/ SUPPLIER TO PROVIDE ADEQUATE INFORMATION TO DEMONSTRATE COMPLIANCE WITH OBC DIV.-B 9.6.1.3.

GENERAL:
1) MECHANICAL VENTILATION IS REQUIRED TO COMPLY WITH OBC-DIV. B, 6.2.2. SEE MECHANICAL DRAWINGS.
2) ALL DOWNSPOUTS TO DRAIN AWAY FROM THE BUILDING AS PER OBC 9.26.18.2. & 5.6.2.2.(3) AND MUNICIPAL STANDARDS.
3) ALL WINDOW WELLS TO DRAIN TO FOOTING LEVEL PER OBC 9.14.6.3. CHECK WITH THE LOCAL AUTHORITY.
4) STUD WALL REINFORCEMENT FOR FUTURE GRAB BARS IN MAIN BATHROOM
REINFORCEMENT OF STUD WALLS SHALL BE INSTALLED ADJACENT TO WATER CLOSETS AND SHOWER OR BATHTUB IN MAIN BATHROOM. REFER TO OBC. DIV. B- 9.5.2.3 & DETAIL PROVIDED.
5) ALL EXTERIOR DOORS TO COMPLY WITH THERMAL RESISTANCE AS STATED IN O.B.C. SB-12-3.1.1.9.
6) ALL AIR BARRIER SYSTEMS ARE REQUIRED TO COMPLY WITH O.B.C. DIV.-B 9.25.3.
7) ALL OUTDOOR AIR INTAKES SHALL BE LOCATED SO THAT THEY ARE SEPARATED FROM SOURCES OF CONTAMINATION (EXHAUST VENTS) IN COMPLIANCE WITH O.B.C. DIV.-B 6.2.3.12. AND TABLE 6.2.3.12.

LUMBER:
1) ALL LUMBER SHALL BE SPRUCE NO.2 GRADE, UNLESS NOTED OTHERWISE.
2) STUDS SHALL BE STUD GRADE SPRUCE, UNLESS NOTED OTHERWISE.
3) LUMBER EXPOSED TO THE EXTERIOR TO BE SPRUCE No.2 GRADE PRESSURE TREATED OR CEDAR, UNLESS NOTED OTHERWISE.
4) ALL LAMINATED VENEER LUMBER (L.V.L.) BEAMS, GIRDER TRUSSES, AND METAL HANGER CONNECTIONS SUPPORTING ROOF FRAMING TO BE DESIGNED & CERTIFIED BY TRUSS MANUFACTURER.
5) LVL BEAMS SHALL BE 2.0E -2950Fb MIN.. NAIL EACH PLY OF LVL WITH 89mm (3 1/2") LONG COMMON WIRE NAILS @ 300mm (12") O.C. STAGGERED IN 2 ROWS FOR 184, 240 & 300mm (7 1/4",9 1/2", 11 7/8") DEPTHS AND STAGGERED IN 3 ROWS FOR GREATER DEPTHS AND FOR 4 PLY MEMBERS ADD 13mm (1/2") DIA. GALVANIZED BOLTS BOLTED AT MID-DEPTH OF BEAM @ 915mm (3'-0") O.C.
6) PROVIDE FACE MOUNT BEAM HANGERS TYPE "SCL" MANUFACTURED BY SIMPSON STRONG-TIE OR EQUAL FOR ALL LVL BEAM TO BEAM CONNECTIONS UNLESS OTHERWISE NOTED. REFER TO ENG. FLOOR LAYOUTS.
7) JOIST HANGERS: PROVIDE METAL HANGERS FOR ALL JOISTS AND BUILT-UP WOOD MEMBERS INTERSECTING FLUSH BUILT-UP WOOD MEMBERS.
8) WOOD FRAMING NOT TREATED WITH A WOOD PRESERVATIVE, IN CONTACT WITH CONCRETE, SHALL BE SEPARATED FROM THE CONCRETE BY AT LEAST 2 mil. POLYETHYLENE FILM, No. 50 (45lbs.) ROLL ROOFING OR OTHER DAMPPROOFING MATERIAL, EXCEPT WHERE THE WOOD MEMBER IS AT LEAST 150mm (6") ABOVE THE GROUND.

STEEL:
1) STRUCTURAL STEEL SHALL CONFORM TO CAN/CSA-G40-21 GRADE 350W. HOLLOW STRUCTURAL SECTIONS SHALL CONFORM TO CSA-G40.21 GRADE 350W CLASS 'H' "STRUCTURAL QUALITY STEEL". OBC. B-9.23.4.3.
2) REINFORCING STEEL SHALL CONFORM TO CSA-G30-18M GRADE 400R.

STUCCO:
1) ALL STUCCO WALLS TO HAVE A MINIMUM 10mm AIR SPACE BEHIND THE CLADDING WITH POSITIVE DRAINAGE TO THE EXTERIOR. THE EXTERIOR SHEATHING MUST NOT BE GYPSUM BASED. ALL STUCCO TO BE INSTALLED AS PER MANUFACTURERS SPECIFICATIONS.

LEGEND

CLASS 'B' VENT
DUPLEX OUTLET (12" ABOVE SURFACE)
WP WEATHERPROOF DUPLEX OUTLET
PL POT LIGHT
PC LIGHT FIXTURE (PULL CHAIN)
SWITCH
FD FLOOR DRAIN
SJ SINGLE JOIST
DJ DOUBLE JOIST
TJ TRIPLE JOIST
LVL LAMINATED VENEER LUMBER
PL POINT LOAD FROM ABOVE
F.A. FLAT ARCH
M.C. MEDICINE CABINET (RECESSED)
DOUBLE VOLUME WALL. SEE NOTE 39
SB SOLID WOOD BEARING (SPRUCE No. 2). SOLID BEARING TO BE AS WIDE AS SUPPORTED MEMBER OR AS DIRECTED BY STRUCTURAL ENGINEER. SOLID BEARING TO BE MINIMUM 2 PIECES.
SBFA SOLID WOOD BEARING TO MATCH FROM ABOVE

EXHAUST FAN TO EXTERIOR
42" DUPLEX OUTLET (HEIGHT A.F.F)
42" GFI GFI DUPLEX OUTLET (HEIGHT A.F.F)
HEAVY DUTY OUTLET (220 volt)
LIGHT FIXTURE (CEILING MOUNTED)
LIGHT FIXTURE (WALL MOUNTED)
HB HOSE BIB (NON–FREEZE)
P.T. PRESSURE TREATED LUMBER
G.T. GIRDER TRUSS BY ROOF TRUSS MANUF.
SA
C.A. CURVED ARCH
CONCRETE BLOCK WALL
CMA

SOIL GAS/ RADON CONTROL (OBC 9.1.1.7. & 9.13.4.)
PROVIDE CONSTRUCTION TO PREVENT LEAKAGE OF SOIL GAS INTO THE BUILDING IF REQUIRED.

CONTRACTOR MUST VERIFY ALL DIMENSIONS ON THE JOB AND REPORT ANY DISCREPANCY TO VA3 DESIGN BEFORE PROCEEDING WITH THE WORK. ALL DRAWINGS AND SPECIFICATIONS ARE INSTRUMENTS OF SERVICE AND THE PROPERTY OF VA3 DESIGN WHICH IF REQUESTED, MUST BE RETURNED AT THE COMPLETION OF THE WORK. ALL DRAWINGS TO BE USED FOR CONSTRUCTION ONLY AFTER BUILDING PERMIT HAS BEEN ISSUED.

(39.) **TWO STOREY VOLUME SPACES**
-FOR A MAXIMUM 5490 mm (18'-0") HEIGHT AND MAXIMUM SUPPORTED ROOF TRUSS LENGTH OF 6.0m, PROVIDE 2-38x140 (2-2"x6") SPR.#2 CONTIN. STUDS @ 300mm (12") O.C. (TRIPLE UP AT EVERY THIRD DOUBLE STUD FOR BRICK WALLS) C/W 9.6 (3/8") THICK EXT. PLYWOOD SHEATHING. PROVIDE SOLID WOOD BLOCKING BETWEEN WOOD STUDS @ 1220 mm (4'-0") O.C. VERTICALLY. -FOR WALLS WITH HORIZ. DISTANCES NOT EXCEEDING 2900 mm (9'-6"), PROVIDE 38x140 (2"x6") STUDS @ 400 (16") O.C. WITH CONTINUOUS 2-38x140 (2-2"x6")TOP PLATES + 1-38x140 (1-2"x6") BOTTOM PLATE & MINIMUM OF 3-38x184 (3-2"x8") CONT. HEADER AT GRND. CEILING LEVEL TOE-NAILED & GLUED AT TOP, BOTTOM PLATES AND HEADERS.

(40.) TYPICAL 1 HOUR RATED PARTY WALL.
REFER TO DETAILS FOR TYPE AND SPECIFICATIONS.

(41.) **FOUNDATION WALL (W.O.D./W.O.B.)**
- WHERE GRADE TO T/O BASEMENT SLAB EXCEEDS 1200mm (3'-11") A 250mm (10") WIDE FOUNDATION WALL IS REQUIRED.

(42.) **EXTERIOR WALLS FOR WALK–OUT CONDITIONS**
THE EXTERIOR BASEMENT STUD WALL TO BE 38x140 (2"x6") STUDS @ 400mm (16") o.c. OR 38x89 (2"x4") STUDS @ 300mm (12")o.c.

DRAIN WATER HEAT RECOVERY UNIT (DWHR)
PER SB12–3.1.1.12., A DRAIN WATER HEAT RECOVERY (DWHR) UNIT SHALL BE INSTALLED IN EACH DWELLING UNIT TO RECEIVE DRAIN WATER FROM ALL SHOWERS OR FROM AT LEAST TWO SHOWERS WHERE THERE ARE TWO OR MORE SHO

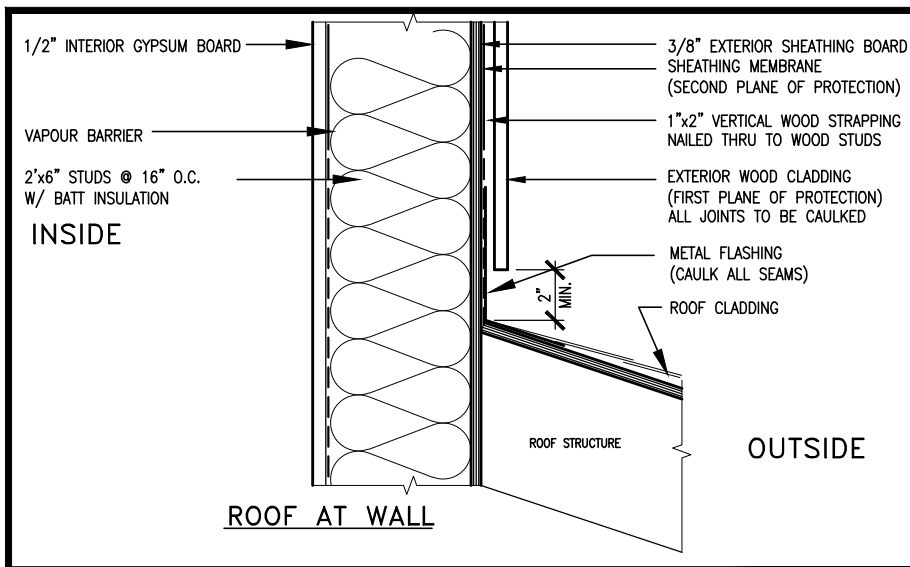

ROOF AT WALL

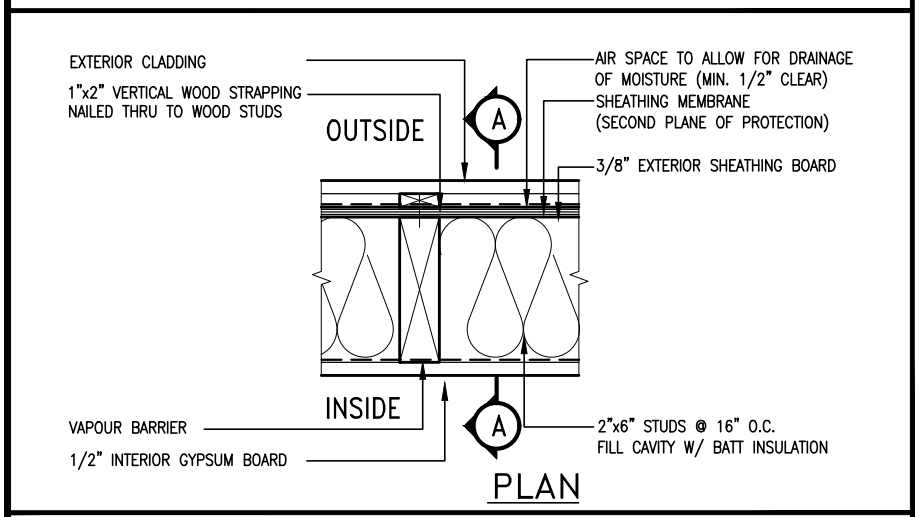

PLAN

EXTERIOR WOOD CLADDING WALL ASSEMBLY

MAX. HEIGHT FOR 2"x4" GARAGE WALL IS AS FOLLOW:

2"x4" @ 16" O.C. – 9–10"
2–2"x4" @ 12" O.C. – 10'–9"
3–2"x4" @ 16" O.C. – 11'–2"
3–2"x4" @ 12" O.C. – 12'–4"

NOTES:

1. FOR ROOF DESIGN SNOW LOAD OF UP TO 2.5 KPa. SUPPORTED ROOF TRUSS LENGTH OF 6.0m AND FLOOR JOIST LENGTH OF 2.5m OF ONE FLOOR.
2. PROVIDE HORIZONTAL SOLID BLOCKING @ 1200 O.C. (4'–0")
3. PROVIDE A MINIMUN OF 9.5mm (3/8") PLYWOOD OR OSB EXTERIOR SHEATHING ON THE EXTERIOR FACE.
4. FOR A 1/50 YEAR REFERENCE WIND PRESSURE OF 0.6 KPa.
5. STUDS GREATER THAN 9'–10" HIGH TO BE No. 2 SPF
6. STUD SPECIFICATION IS SUITABLE FOR BRICK VENEER OR SIDING.

** MAX. HEIGHT FOR 2"x6" EXTERIOR WALL IS AS FOLLOW:

2"x6" @ 16" O.C. – 12'–6"
2"x6" @ 12" O.C. – 13'–10"
2–2"x6" @ 16" O.C. – 15'–0"
2–2"x6" @ 12" O.C. – 17'–4"

MAX. HEIGHT FOR 2"x8" EXTERIOR WALL IS AS FOLLOWS:

2"x8" @ 16" O.C. – 16'–0"
2"x8" @ 12" O.C. – 17'–9"
2–2"x8" @ 16" O.C. – 20'–4"
2–2"x8" @ 12" O.C. – 22'–4"

NOTES:

1. FOR ROOF DESIGN SNOW LOAD OF UP TO 2.5 KPa
2. SUPPORTED ROOF TRUSS LENGTH OF 6.0m ONLY.
3. PROVIDE HORIZONTAL SOLID BLOCKING @ 1200 O.C. (4'–0")
4. PROVIDE A MINIMUM OF 9.5mm (3/8") PLYWOOD OR OSB EXTERIOR SHEATHING ON THE EXTERIOR FACE AND 12.5mm (1/2") GYPSUM BOARD ON THE INTERIOR FACE.
5. WALL FRAMING SHALL CONFORM TO OBC 9.23.10.1.(2)
6. FOR A 1/50 YEAR REFERENCE WIND PRESSURE OF 0.6 KPa
7. STUDS GREATER THAN 9'–10" HIGH TO BE No. 2 SPF.
8. STUD SPECIFICATION IS SUITABLE FOR BRICK VENEER OR SIDING.

** STUD INFORMATION TAKEN FROM OBC TABLE A–30

STUD WALL REINFORCEMENT FOR FUTURE GRAB BARS IN MAIN BATHROOM

REINFORCEMENT OF WOOD STUD WALLS SHALL BE INSTALLED ADJACENT TO WATER CLOSETS AND SHOWER OR BATHTUB IN MAIN BATHROOM PER OBC. DIV. B–9.5.2.3..
FUTURE GRAB BARS TO BE MOUNTED TO RESIST HORIZ. AND VERT. LOADS OF 1.3 KN (300 lb)
REFER TO OBC. DIV. B– WATER CLOSET 3.8.3.8.(3)(a) & 3.8.3.8.(3)(c).. SHOWER 3.8.3.13.(2)(g).. & BATHTUB 3.8.3.13.(4)(e). AND DETAILS PROVIDED BELOW.

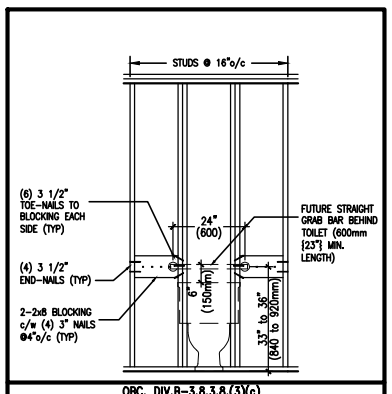

OBC. DIV.B–3.8.3.8.(3)(c)
QGB1 FUTURE GRAB BAR @ TOILET (BACK WALL)

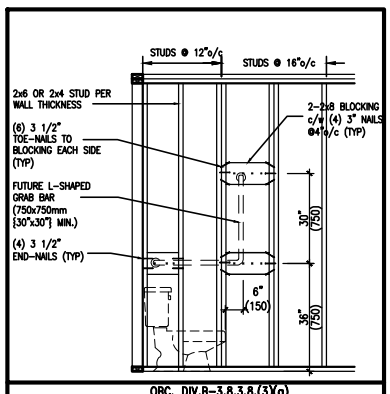

OBC. DIV.B–3.8.3.8.(3)(a)
QGB1A FUTURE L–SHAPE GRAB BAR DETAIL @ TOILET (*ONLY IF SIDE WALL PRESENT)

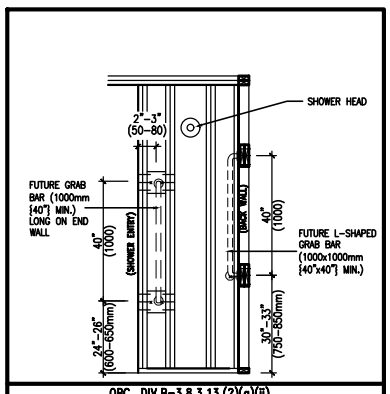

OBC. DIV.B–3.8.3.13.(2)(g)(ii)
QGB2 FUTURE GRAB BAR IN SHOWER (VERTICAL BAR LOCATED @ EACH END WALL)

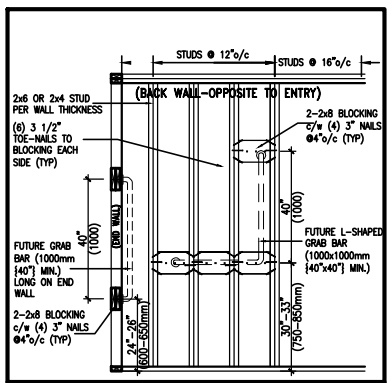

OBC. DIV.B–3.8.3.13.(2)(g)(iii)
QGB2A FUTURE L–SHAPE GRAB BAR DETAIL @ SHOWER (BACK WALL)

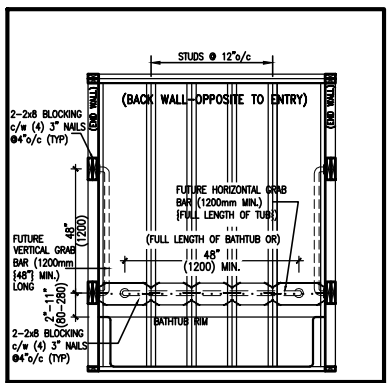

OBC. DIV.B–3.8.3.13.(4)(e)
QGB3 FUTURE GRAB BAR IN BATHTUB (SIDE VIEW)

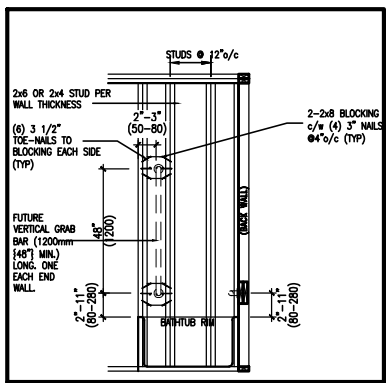

OBC. DIV.B–3.8.3.13.(4)(e)
QGB3A FUTURE GRAB BAR IN BATHTUB (VERTICAL BAR LOCATED @ EACH END WALL)

2020–QUAILE–GB–DETAIL.dwg

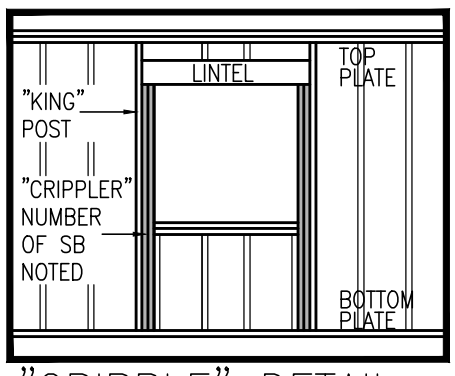

"CRIPPLE" DETAIL

JAN 26, 2022

no.	description	date	by
9	.	.	.
8	.	.	.
7	.	.	.
6	.	.	.
5	.	.	.
4	UPDATE TO 2022	JAN 11–22	RC
3	UPDATE TO 2020	FEB 24–20	RC
2	UPDATE TO 2018	JAN 11–18	RC
1	ISSUE FOR CLIENT REVIEW	AUG 04–17	RC

The undersigned has reviewed and takes responsibility for this design and has the qualifications and meets the requirements set out in the Ontario Building Code to be a Designer.

qualification information
name: Wellington Jno–Baptiste — signature — BCIN: 25591
registration information
VA3 Design Inc. — 42658

Contractor must verify all dimensions on the job and report any discrepancy to the Designer before proceeding with the work. All drawings and specifications are instruments of service and the property of the Designer which must be returned at the completion of the work. Drawings are not to be scaled.

VA3 DESIGN
255 Consumers Rd Suite 120
Toronto ON M2J 1R4
t 416.630.2255 f 416.630.4782
va3design.com

BAYVIEW WELLINGTON

CONST NOTE –

project name: GREEN VALLEY EAST — municipality: BRADFORD — project no. 16023

date: MAY 2016 — CONSTRUCTION NOTES — drawing no. CN2

drawn by: RC — checked by: – — scale: 3/16" = 1'–0" — file name: 16023–CN–2022–A1

RICHARD – H:\ARCHIVE\WORKING\2016\16023.BW\Units\CN NOTES\16023–CN–2022–A1.dwg – Wed – Jan 26 2022 – 12:05 PM

All drawings specifications, related documents and design are the copyright property of VA3 DESIGN. Reproduction of this property in whole or in part is strictly prohibited without VA3 DESIGN's written permission.

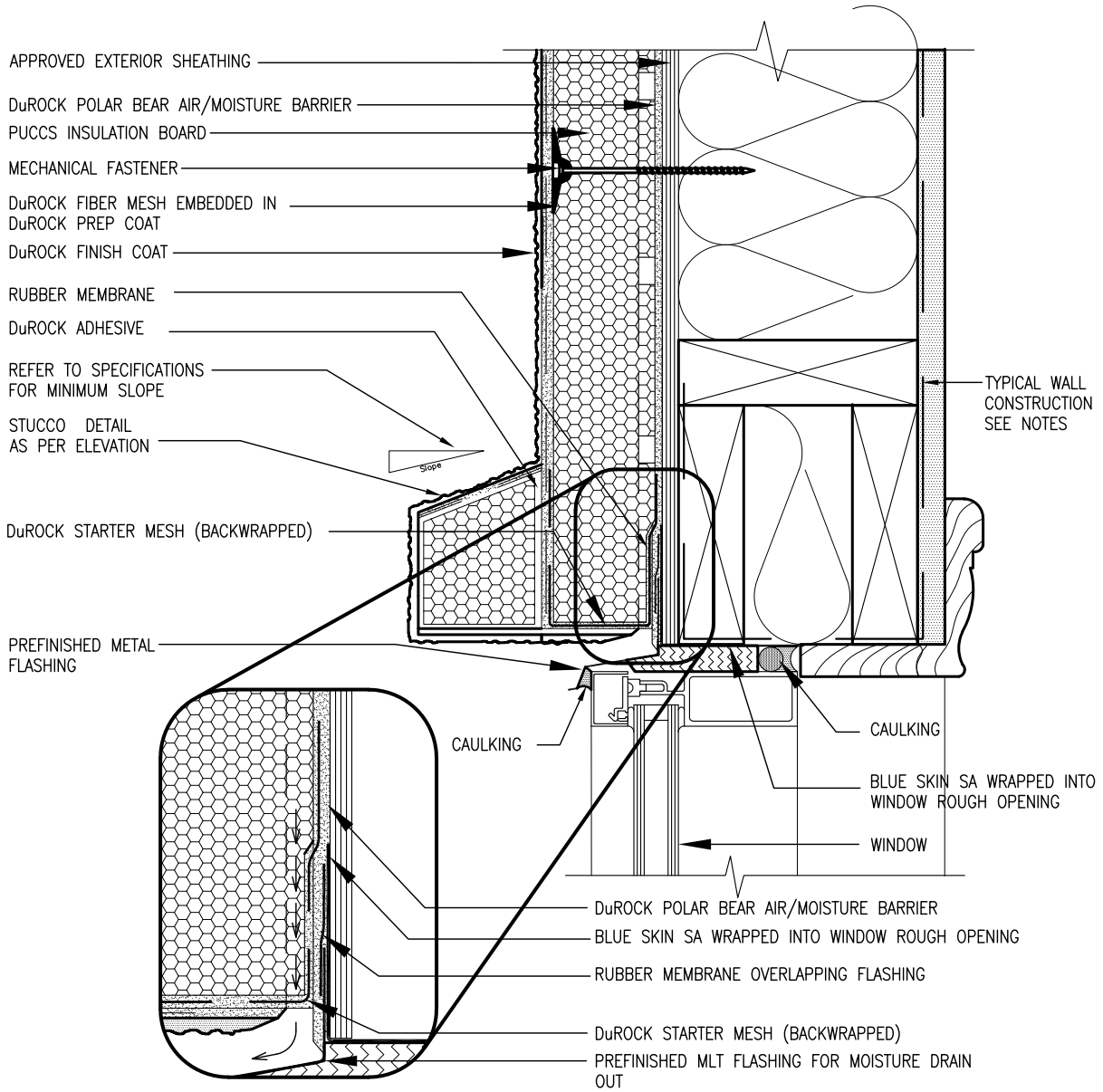

1 / CN3 WINDOW HEADER

SCALE: 3"=1'-0"

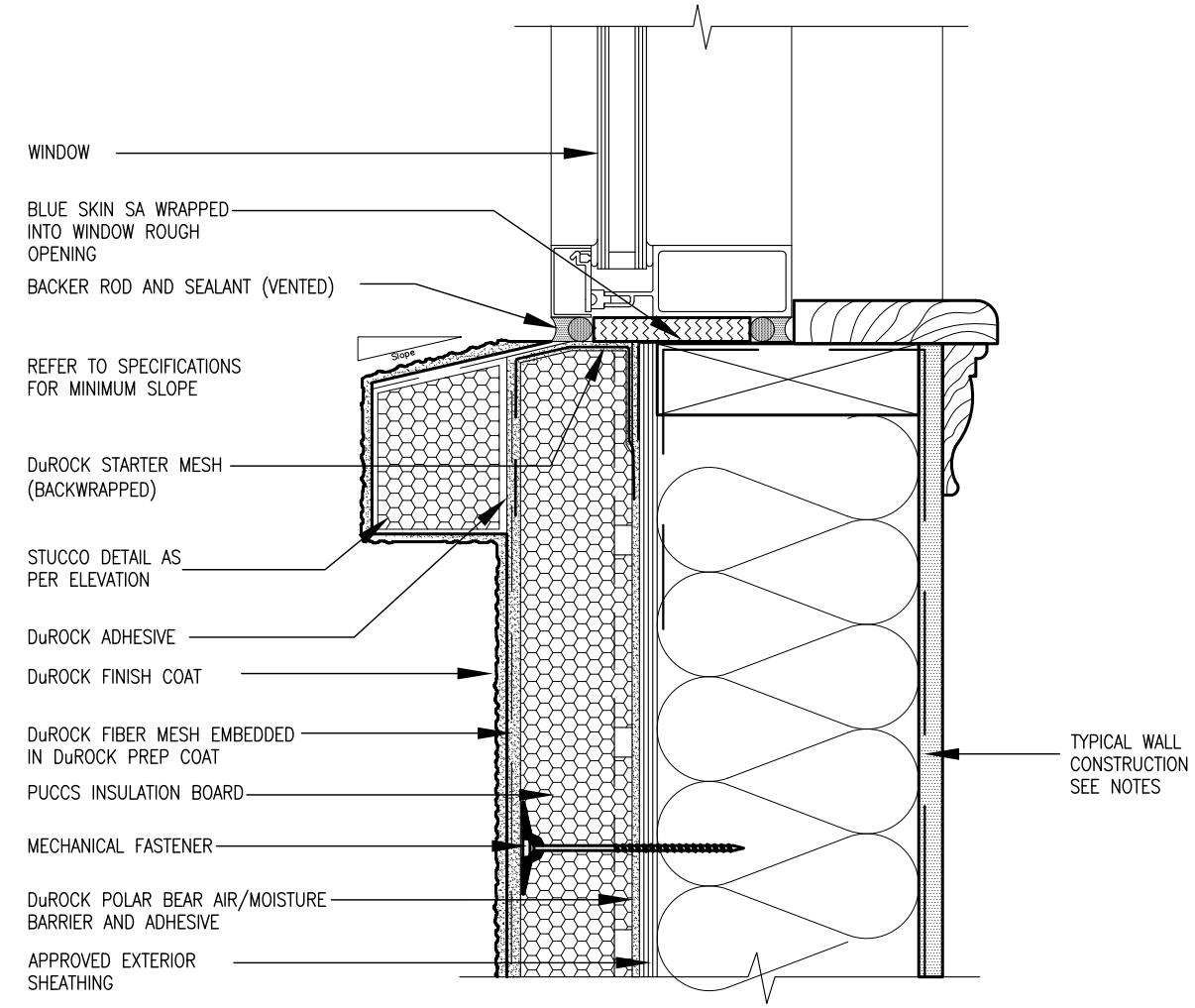

2 / CN3 WINDOW SILL

SCALE: 3"=1'-0"

ALL STUCCO WALLS TO HAVE A MINIMUM 10mm AIR SPACE BEHIND THE CLADDING WITH POSITIVE DRAINAGE TO THE EXTERIOR. THE EXTERIOR SHEATHING MUST NOT BE GYPSUM BASED. ALL STUCCO TO BE INSTALLED AS PER MANUFACTURERS SPECIFICATIONS.
DETAILS ARE BASED ON DuROCK PUCCS SYSTEM

CONST NOTE

project no. 16023

drawing no. CN3

BAYVIEW WELLINGTON

municipality BRADFORD

project name GREEN VALLEY EAST

CONSTRUCTION NOTES

date MAY 2016 | drawn by RC | checked by - | scale 3/16" = 1'-0" | file name 16023-CN-2022-A1

RICHARD - H:\ARCHIVE\WORKING\2016\16023.BW\Units\CN NOTES\16023-CN-2022-A1.dwg - Wed - Jan 26 2022 - 12:07 PM

VA3 DESIGN
255 Consumers Rd Suite 120
Toronto ON M2J 1R4
t 416.630.2255 f 416.630.4782
va3design.com

The undersigned has reviewed and takes responsibility for this design and has the qualifications and meets the requirements set out in the Ontario Building Code to be a Designer.

qualification information

Wellington Jno-Baptiste — signature

name: Wellington Jno-Baptiste — registration information: VA3 Design Inc. — 25591 — BCIN 42658

Contractor must verify all dimensions on the job and report any discrepancy to the Designer before proceeding with the work. All drawings, specifications and instruments of service are the property of the Designer which must be returned at the completion of the work. Drawings are not to be scaled.

no.	description	date	by
9	.	.	.
8	.	.	.
7	.	.	.
6	.	.	.
5	.	.	.
4	UPDATE TO 2022	JAN 11-22	RC
3	UPDATE TO 2020	FEB 24-20	RC
2	UPDATE TO 2018	JAN 11-18	RC
1	ISSUE FOR CLIENT REVIEW	AUG 04-17	RC

All drawings specifications, recited documents and design are the copyright property of VA3 DESIGN. Reproduction of this property in whole or in part is strictly prohibited without VA3 DESIGN's written permission.

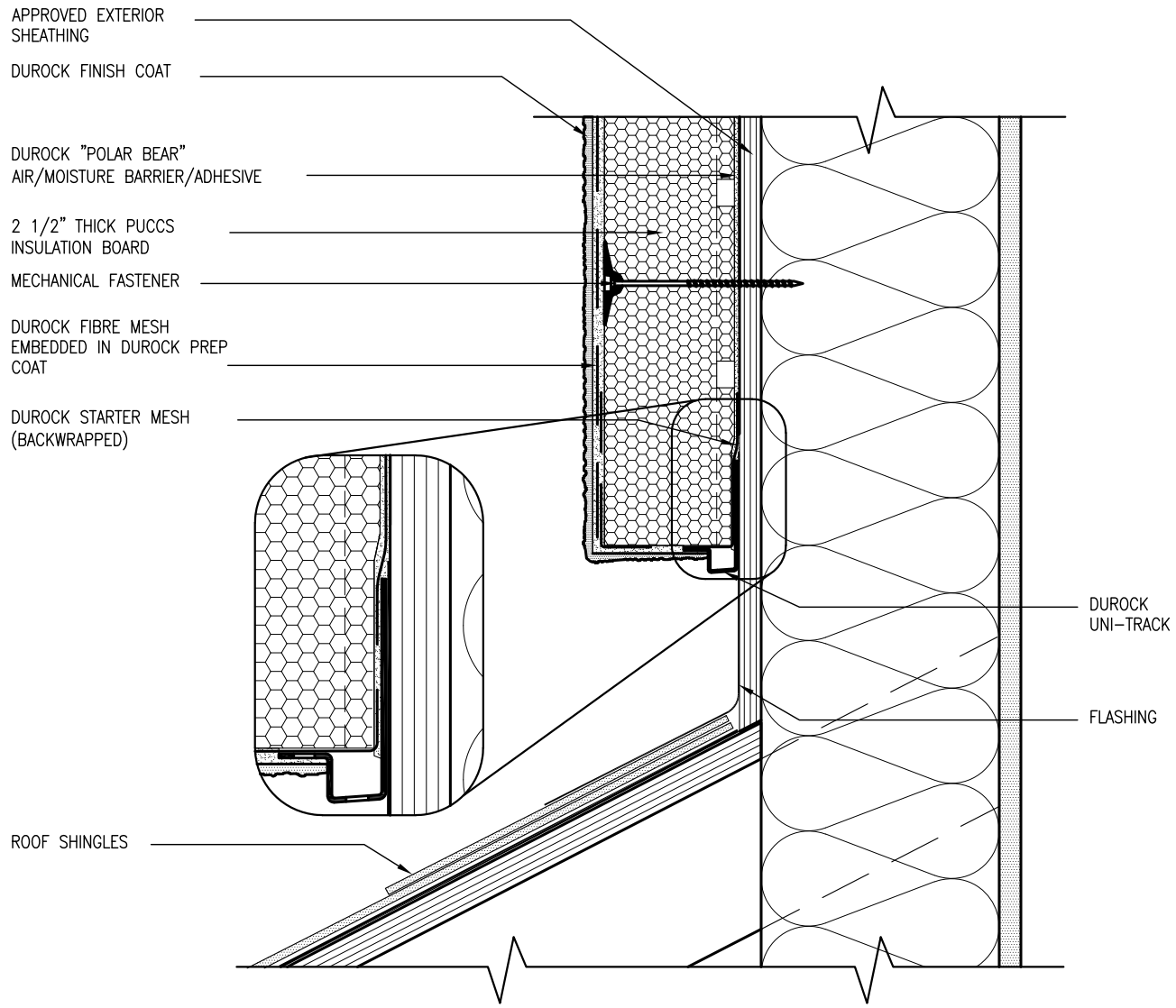

3 / CN4 STUCCO TERMINATION @ ROOF

SCALE: 3"=1'-0"

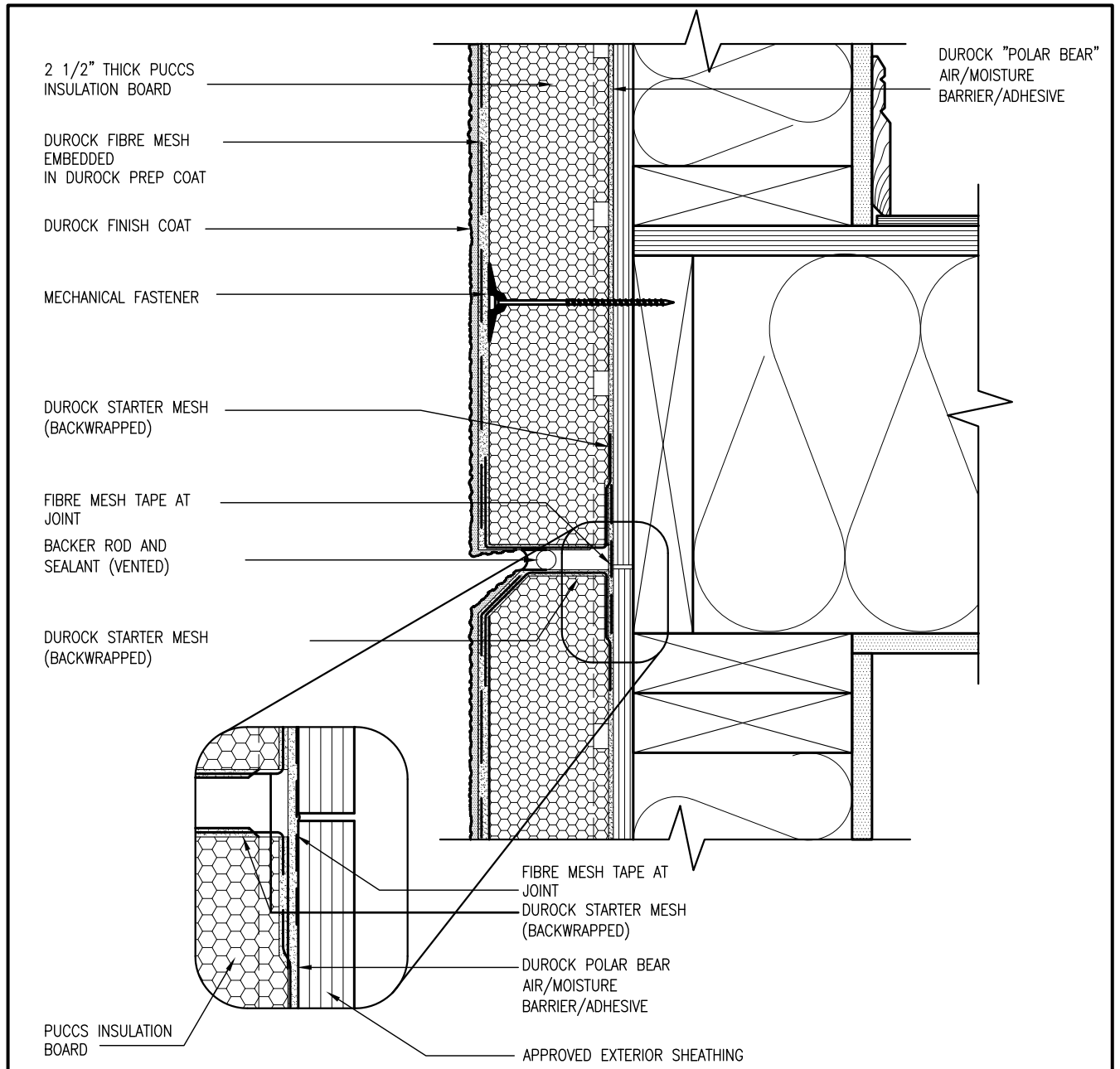

4 / CN4 HORIZONTAL EXPANSION JOINT

SCALE: 3"=1'-0"

ALL STUCCO WALLS TO HAVE A MINIMUM 10mm AIR SPACE BEHIND THE CLADDING WITH POSITIVE DRAINAGE TO THE EXTERIOR. THE EXTERIOR SHEATHING MUST NOT BE GYPSUM BASED. ALL STUCCO TO BE INSTALLED AS PER MANUFACTURERS SPECIFICATIONS.
DETAILS ARE BASED ON DuROCK PUCCS SYSTEM

CONST NOTE
-

project no. 16023

BAYVIEW WELLINGTON

municipality BRADFORD

project name GREEN VALLEY EAST

CONSTRUCTION NOTES

drawing no. CN4

date MAY 2016 | checked by - | scale 3/16" = 1'-0" | file name 16023-CN-2022-A1

drawn by RC

RICHARD - H:\ARCHIVE\WORKING\2016\16023.BW\Units\CN NOTES\16023-CN-2022-A1.dwg - Wed - Jan 26 2022 - 12:07 PM

VA3 DESIGN
255 Consumers Rd Suite 120
Toronto ON M2J 1R4
t 416.630.2255 f 416.630.4782
va3design.com

The undersigned has reviewed and takes responsibility for this design and has the qualifications and meets the requirements set out in the Ontario Building Code to be a Designer.

qualification information

Wellington Jno-Baptiste 25591 BCIN

name | registration information | signature

VA3 Design Inc. 42658

Contractor must verify all dimensions on the job and report any discrepancy to the Designer before proceeding with the work. All drawings specifications, recited documents and design are the property of the Designer which must be returned at the completion of the work. Drawings are not to be scaled.

no.	description	date	by
9	-	-	-
8	-	-	-
7	-	-	-
6	-	-	-
5	-	-	-
4	UPDATE TO 2022	JAN 11-22	RC
3	UPDATE TO 2020	FEB 24-20	RC
2	UPDATE TO 2018	JAN 11-18	RC
1	ISSUE FOR CLIENT REVIEW	AUG 04-17	RC

All drawings specifications, recited documents and design are the copyright property of VA3 DESIGN. Reproduction of this property in whole or in part is strictly prohibited without VA3 DESIGN's written permission.

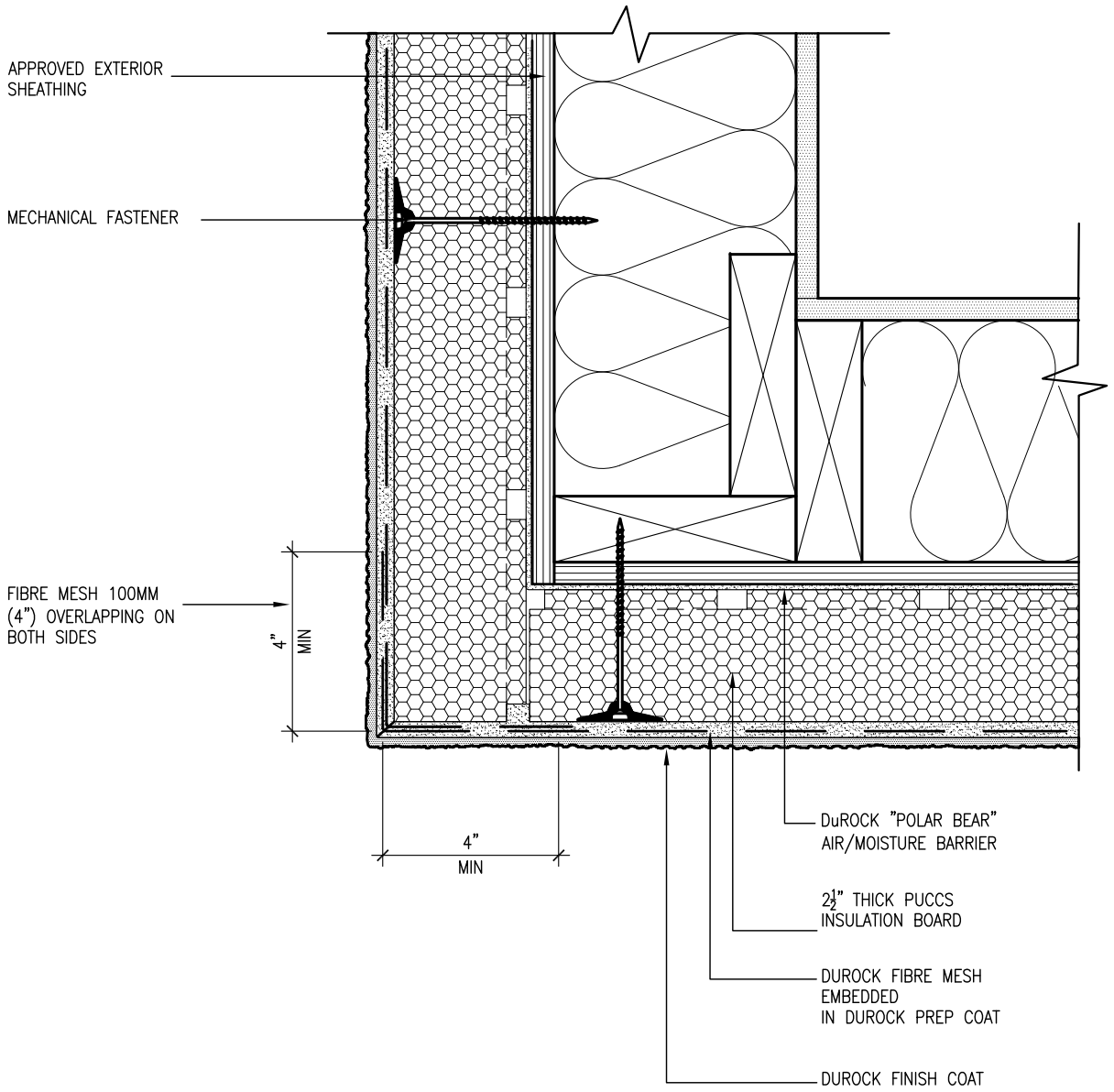

5 / CN5 CORNER DETAIL

SCALE: 3"=1'-0"

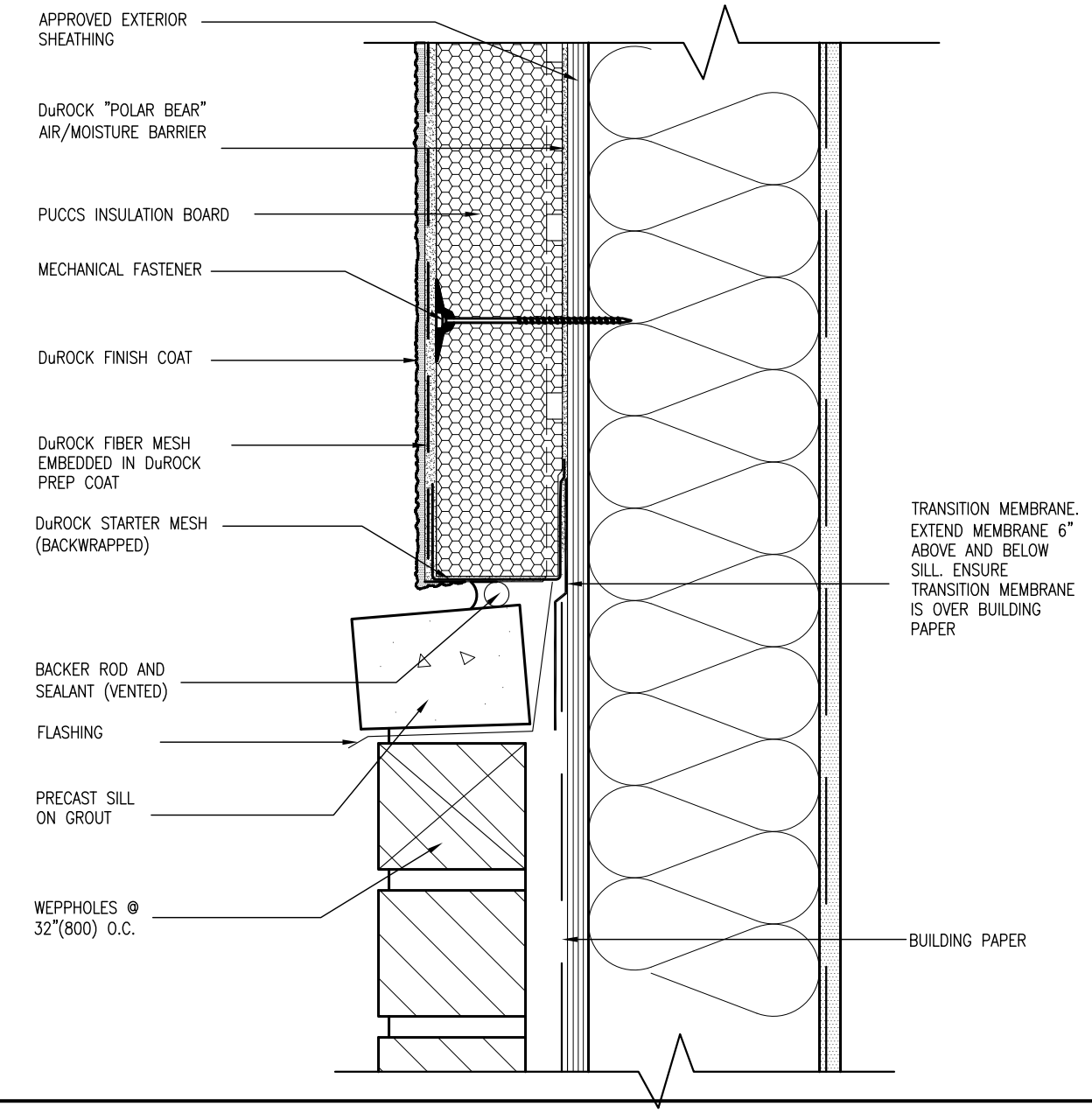

6 / CN5 STUCCO / MASONRY PLINTH CONNECTION

SCALE: 3"=1'-0"

ALL STUCCO WALLS TO HAVE A MINIMUM 10mm AIR SPACE BEHIND THE CLADDING WITH POSITIVE DRAINAGE TO THE EXTERIOR. THE EXTERIOR SHEATHING MUST NOT BE GYPSUM BASED. ALL STUCCO TO BE INSTALLED AS PER MANUFACTURERS SPECIFICATIONS.
DETAILS ARE BASED ON DuROCK PUCCS SYSTEM

CONST NOTE

project no. 16023

BAYVIEW WELLINGTON

municipality BRADFORD

project name GREEN VALLEY EAST

CONSTRUCTION NOTES

drawing no. CN5

date MAY 2016 | checked by - | scale 3/16" = 1'-0" | file name 16023-CN-2022-A1

drawn by RC

RICHARD - H:\ARCHIVE\WORKING\2016\16023.BW\Units\CN NOTES\16023-CN-2022-A1.dwg - Wed - Jan 26 2022 - 12:08 PM

VA3 DESIGN
255 Consumers Rd Suite 120
Toronto ON M2J 1R4
t 416.630.2255 f 416.630.4782
va3design.com

The undersigned has reviewed and takes responsibility for this design and has the qualifications and meets the requirements set out in the Ontario Building Code to be a Designer.

qualification information

name	registration information
Wellington Jno-Baptiste	25591 BCIN
VA3 Design Inc.	42658

signature

Contractor must verify all dimensions on the job and report any discrepancy to the Designer before proceeding with the work. All drawings, specifications and instruments of service are the property of the Designer which must be returned at the completion of the work. Drawings are not to be scaled.

no.	description	date	by
9	-	-	-
8	-	-	-
7	-	-	-
6	-	-	-
5	-	-	-
4	UPDATE TO 2022	JAN 11-22	RC
3	UPDATE TO 2020	FEB 24-20	RC
2	UPDATE TO 2018	JAN 11-18	RC
1	ISSUE FOR CLIENT REVIEW	AUG 04-17	RC

All drawings specifications, recited documents and design are the copyright property of VA3 DESIGN. Reproduction of this property in whole or in part is strictly prohibited without VA3 DESIGN's written permission.

SB12–COMPLIANCE PACKAGE 'A1'

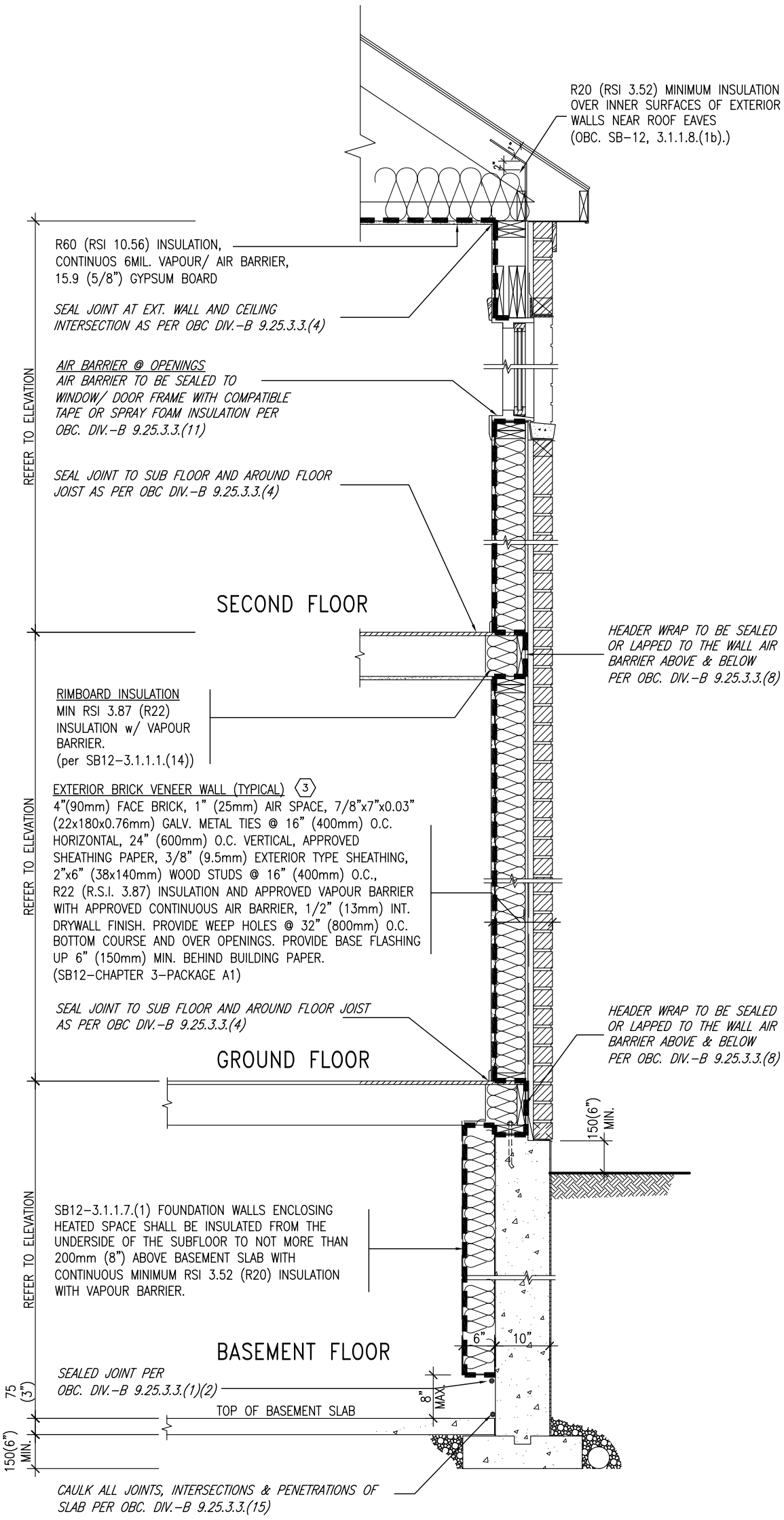

INSULATION REQUIREMENTS
REFER TO OBC SB–12, CHAPTER 3.
ZONE 1– COMPLIANCE PACKAGE A1.

AIR BARRIER SYSTEMS
AIR BARRIER TO BE INSTALLED IN CONFORMANCE WITH OBC. DIV. B–9.25.3

REFER TO ADDITIONAL DETAILS FOR STRUCTURAL COMPONENTS

EW

TYPICAL EXT. WALL AIR BARRIER CONTINUITY SECTION w/ BRICK VENEER (PACKAGE A1) 10" FOUNDATION WALL

SCALE: N.T.S.

THE MINIMAL THERMAL PERFORMANCE OF BUILDING ENVELOPE AND EQUIPMENT SHALL CONFORM TO THE FOLLOWING SB–12 COMPLIANCE PACKAGE AS PER OBC SUPPLEMENTARY STANDARD SB–12, SECTION 3.1.1.1.

USE SB–12 COMPLIANCE PACKAGE (A1):

COMPONENT	A1	Notes:
Ceiling with Attic Space Minimum RSI (R) value	10.56 (R60)	R20 at inner face of exterior walls
Ceiling without Attic Space Minimum RSI (R) value	5.46 (R31)	BATT or SPRAY
Exposed FLoor Minimum RSI (R) value	5.46 (R31)	BATT or SPRAY
Walls Above Grade Minimum RSI (R) value	3.87 (R22)	6" R22 BATT
Basement Walls Minimum RSI (R) value	3.52ci (R20ci)	OPTION TO USE R12+R10ci.
Edge of Below Grade Slab ≤600mm below grade Minimum RSI (R) value	1.76 (R10)	RIGID INSUL
Windows & Sliding glass Doors Maximum U–value	1.6	
Skylights Maximum U–value	2.8U	
Space Heating Equipment Minimum AFUE	96% Min.	NATURAL GAS
Hot Water Heater Minimum EF	0.8	NATURAL GAS
HRV Minimum Efficiency	75%	–
Drain Water Heat Recovery Unit (DWHR)	Minimum 1 OR Maximum 2 Required. Dependent on number of showers installed. Refer to SB12–3.1.1.12 for information	

ci– Denotes Continuous Insulation without framing interruption.

LICENSED PROFESSIONAL ENGINEER
S. J. BOYD
PROVINCE OF ONTARIO
JAN 26, 2022

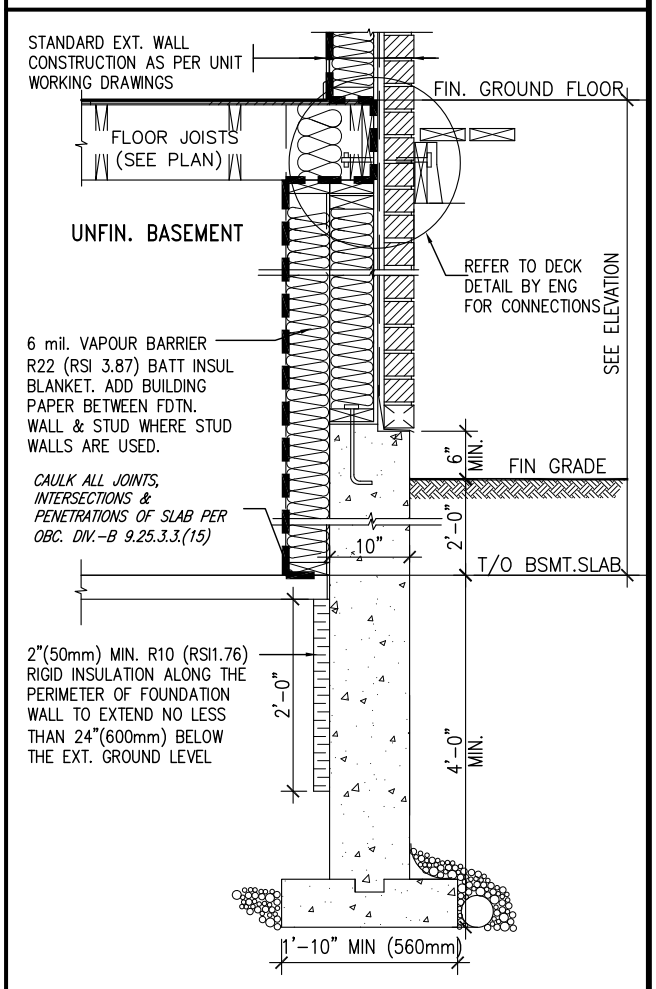

✳ REVISED–FEB 2017

SECTION AT W.O.D/W.O.B.

no.	description	date	by
9	.	.	.
8	.	.	.
7	.	.	.
6	.	.	.
5	.	.	.
4	UPDATE TO 2022	JAN 11–22	RC
3	UPDATE TO 2020	FEB 24–20	RC
2	UPDATE TO 2018	JAN 11–18	RC
1	ISSUE FOR CLIENT REVIEW	AUG 04–17	RC

The undersigned has reviewed and takes responsibility for this design and has the qualifications and meets the requirements set out in the Ontario Building Code to be a Designer.

qualification information
name: Wellington Jno–Baptiste — signature — BCIN: 25591
registration information
VA3 Design Inc. — 42658

Contractor must verify all dimensions on the job and report any discrepancy to the Designer before proceeding with the work. All drawings and specifications are instruments of service and the property of the Designer which must be returned at the completion of the work. Drawings are not to be scaled.

VA3 DESIGN
255 Consumers Rd Suite 120
Toronto ON M2J 1R4
t 416.630.2255 f 416.630.4782
va3design.com

BAYVIEW WELLINGTON

CONST NOTE –

project name: GREEN VALLEY EAST
municipality: BRADFORD
project no.: 16023
date: MAY 2016
CONSTRUCTION NOTES
drawing no.: CN6
drawn by: RC
checked by: –
scale: 3/16" = 1'–0"
file name: 16023–CN–2022–A1

RICHARD – H:\ARCHIVE\WORKING\2016\16023.BW\Units\CN NOTES\16023–CN–2022–A1.dwg – Wed – Jan 26 2022 – 12:08 PM

All drawings specifications, related documents and design are the copyright property of VA3 DESIGN. Reproduction of this property in whole or in part is strictly prohibited without VA3 DESIGN's written permission.

SB12–COMPLIANCE PACKAGE 'A1'

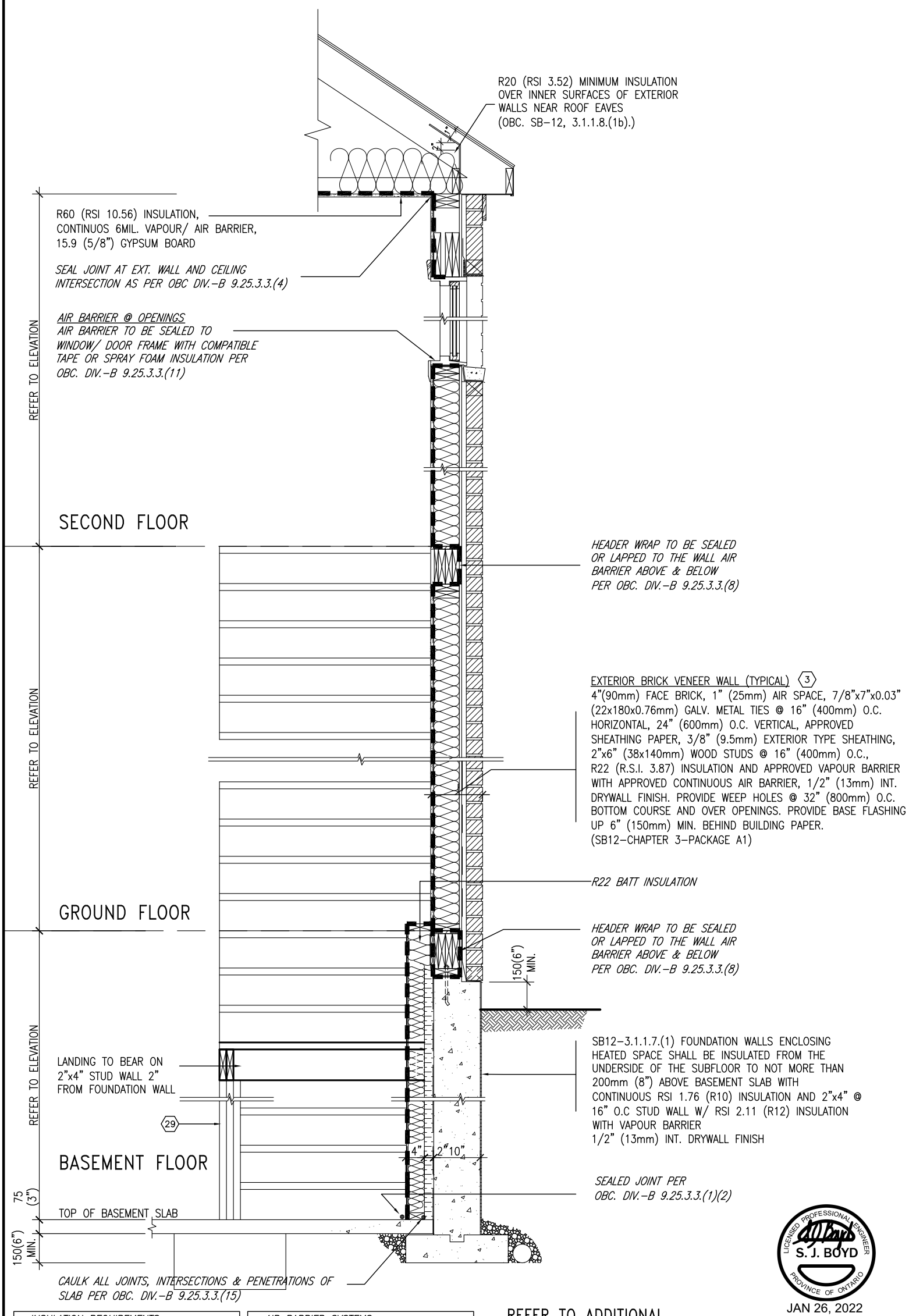

LICENSED PROFESSIONAL ENGINEER
S. J. BOYD
PROVINCE OF ONTARIO
JAN 26, 2022

INSULATION REQUIREMENTS	AIR BARRIER SYSTEMS
REFER TO OBC SB–12, CHAPTER 3. ZONE 1– COMPLIANCE PACKAGE A1.	AIR BARRIER TO BE INSTALLED IN CONFORMANCE WITH OBC. DIV. B–9.25.3

REFER TO ADDITIONAL DETAILS FOR STRUCTURAL COMPONENTS

EW / STR

TYPICAL EXT. WALL AIR BARRIER CONTINUITY SECTION w/ BRICK VENEER AT STAIR AND SUNKEN COND (PACKAGE A1) 10" FOUNDATION WALL

SCALE: N.T.S.

no.	description	date	by
9	.	.	.
8	.	.	.
7	.	.	.
6	.	.	.
5	.	.	.
4	UPDATE TO 2022	JAN 11–22	RC
3	UPDATE TO 2020	FEB 24–20	RC
2	UPDATE TO 2018	JAN 11–18	RC
1	ISSUE FOR CLIENT REVIEW	AUG 04–17	RC

The undersigned has reviewed and takes responsibility for this design and has the qualifications and meets the requirements set out in the Ontario Building Code to be a Designer.

qualification information

name: Wellington Jno–Baptiste — signature — BCIN: 25591

registration information: VA3 Design Inc. — 42658

Contractor must verify all dimensions on the job and report any discrepancy to the Designer before proceeding with the work. All drawings and specifications are instruments of service and the property of the Designer which must be returned at the completion of the work. Drawings are not to be scaled.

VA3 DESIGN
255 Consumers Rd Suite 120
Toronto ON M2J 1R4
t 416.630.2255 f 416.630.4782
va3design.com

BAYVIEW WELLINGTON

CONST NOTE –

project name: GREEN VALLEY EAST — municipality: BRADFORD — project no. 16023

date: MAY 2016 — CONSTRUCTION NOTES — drawing no. CN7

drawn by: RC — checked by: – — scale: 3/16" = 1'–0" — file name: 16023–CN–2022–A1

RICHARD – H:\ARCHIVE\WORKING\2016\16023.BW\Units\CN NOTES\16023–CN–2022–A1.dwg – Wed – Jan 26 2022 – 12:09 PM

All drawings specifications, related documents and design are the copyright property of VA3 DESIGN. Reproduction of this property in whole or in part is strictly prohibited without VA3 DESIGN's written permission.

COMPLIANCE TO OBC SB-12 2.1.1.1(11)

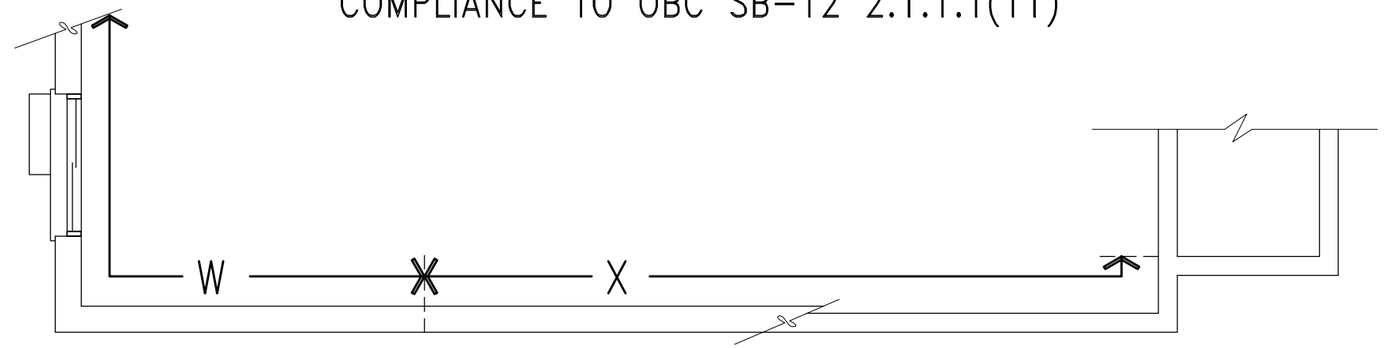

WOB PLAN

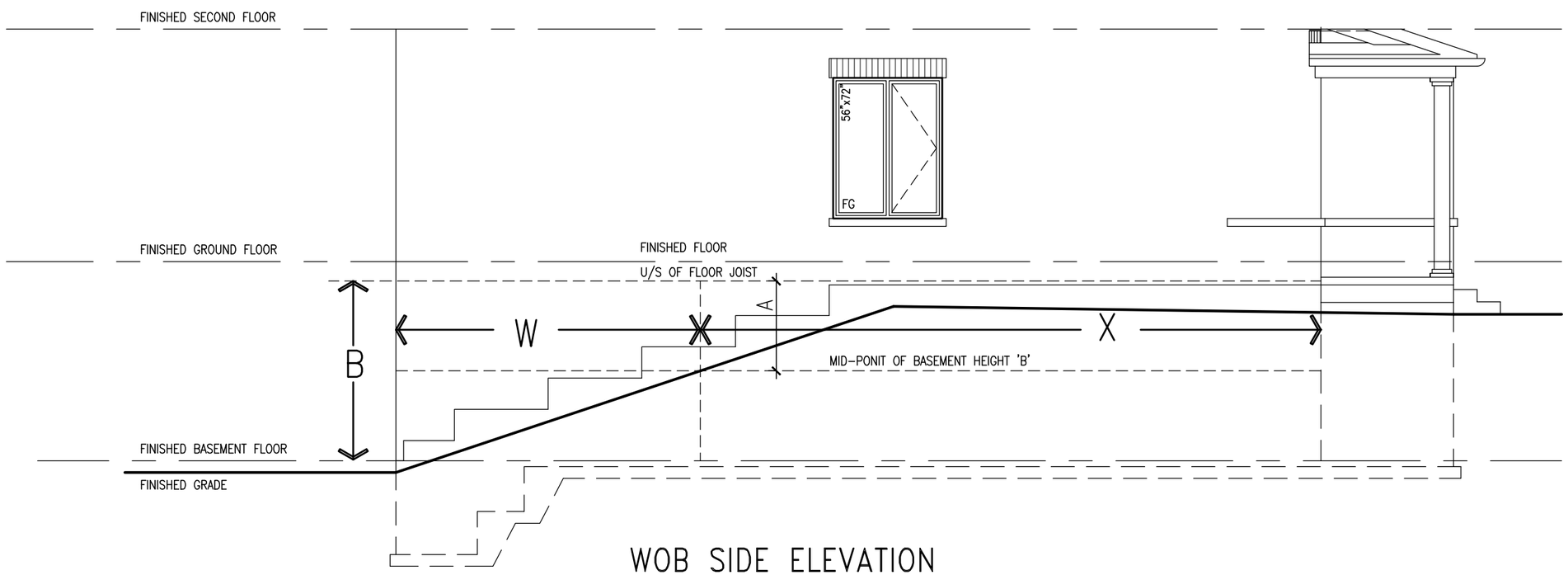

WOB SIDE ELEVATION

WHEN EXPOSED WALL "A" IS GREATER THAN 50% OF BASEMENT WALL HEIGHT "B"
INSULATION VALUE FOR WALL IN SECTION "W" IS NOT LESS THAN IS REQUIRED FOR ABOVE GRADE WALL AS REQUIRED BY TABLE 2.1.1.2A

WHEN EXPOSED WALL "A" IS LESS THAN 50% OF BASEMENT WALL HEIGHT "B"
INSULATION VALUE FOR WALL IN SECTION "X" IS NOT LESS THAN BASEMENT WALL AS REQUIRED BY TABLE 2.1.1.2A

LICENSED PROFESSIONAL ENGINEER
S. J. BOYD
PROVINCE OF ONTARIO
JAN 26, 2022

CONST NOTE
-

project no. 16023

BAYVIEW WELLINGTON

municipality BRADFORD

project name GREEN VALLEY EAST

CONSTRUCTION NOTES

drawing no. CN8

date MAY 2016 | drawn by RC | checked by - | scale 3/16" = 1'-0"

File name 16023-CN-2022-A1

RICHARD - H:\ARCHIVE\WORKING\2016\16023.BW\Units\CN NOTES\16023-CN-2022-A1.dwg - Wed - Jan 26 2022 - 12:06 PM

VA3 DESIGN
255 Consumers Rd Suite 120
Toronto ON M2J 1R4
t 416.630.2255 f 416.630.4782
va3design.com

The undersigned has reviewed and takes responsibility for this design and has the qualifications and meets the requirements set out in the Ontario Building Code to be a Designer.

qualification information	name	registration information
	Wellington Jno-Baptiste	25591
signature	VA3 Design Inc.	BCIN 42658

Contractor must verify all dimensions on the job and report any discrepancy to the Designer before proceeding with the work. All drawings, specifications and reports are instruments of service and are the property of the Designer which must be returned at the completion of the work. Drawings are not to be scaled.

no.	description	date	by
9	-	-	-
8	-	-	-
7	-	-	-
6	-	-	-
5	-	-	-
4	UPDATE TO 2022	JAN 11-22	RC
3	UPDATE TO 2020	FEB 24-20	RC
2	UPDATE TO 2018	JAN 11-18	RC
1	ISSUE FOR CLIENT REVIEW	AUG 04-17	RC

All drawings specifications, related documents and design are the copyright property of VA3 DESIGN. Reproduction of this property in whole or in part is strictly prohibited without VA3 DESIGN's written permission.

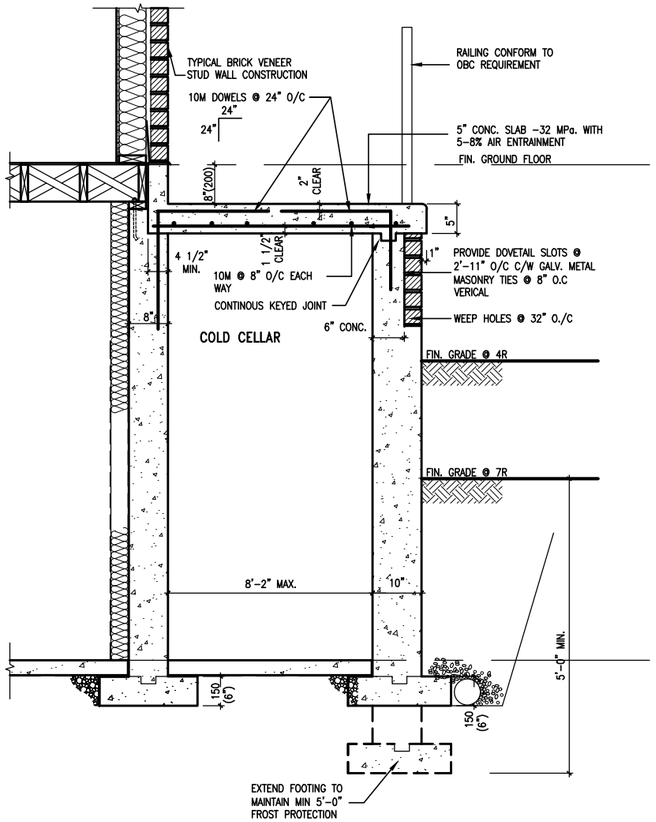

X1 SECTION AT PORCH FOR 4-7R CONDITION

SCALE: N.T.S.

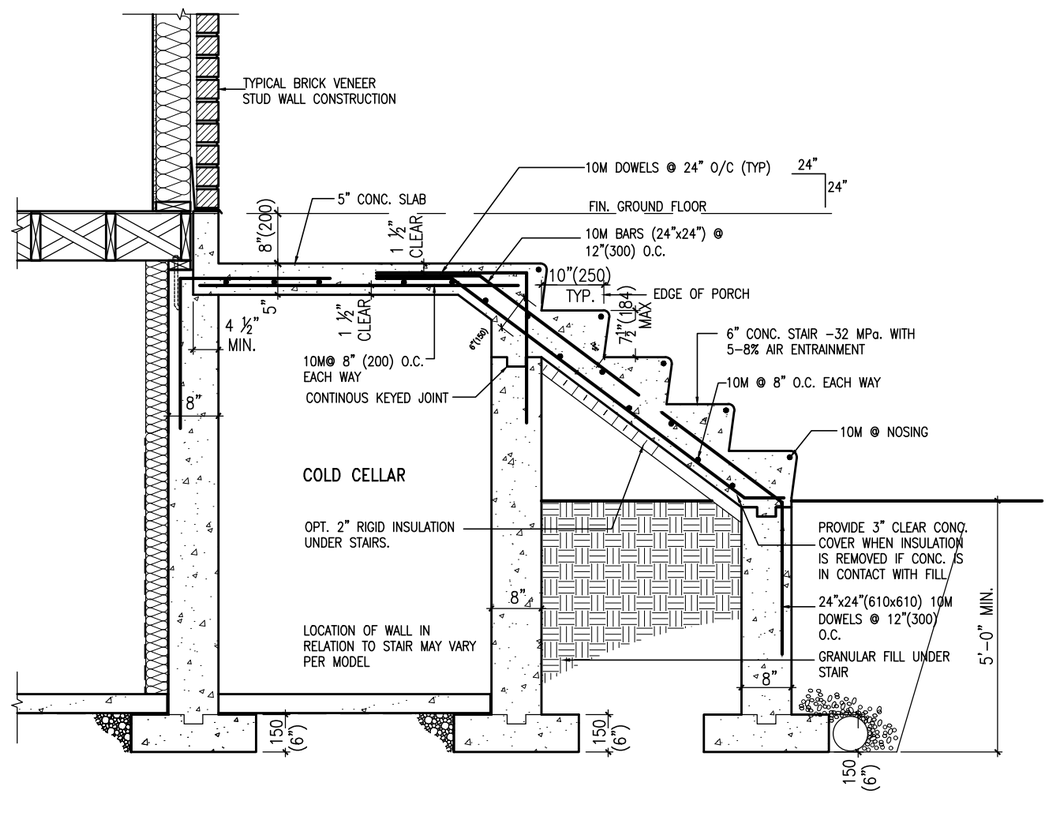

X2 EXTERIOR CONC. STAIR DETAIL (6 RISERS/ 7 RISERS SIMILAR)

SCALE: N.T.S.

LICENSED PROFESSIONAL ENGINEER
S. J. BOYD
PROVINCE OF ONTARIO
JAN 26, 2022

no.	description	date	by
9	-	-	-
8	-	-	-
7	-	-	-
6	-	-	-
5	-	-	-
4	UPDATE TO 2022	JAN 11-22	RC
3	UPDATE TO 2020	FEB 24-20	RC
2	UPDATE TO 2018	JAN 11-18	RC
1	ISSUE FOR CLIENT REVIEW	AUG 04-17	RC

The undersigned has reviewed and takes responsibility for this design and has the qualifications and meets the requirements set out in the Ontario Building Code to be a Designer.

qualification information

name	registration information
Wellington Jno-Baptiste	25591 BCIN
VA3 Design Inc.	42658

signature

Contractor must verify all dimensions on the job and report any discrepancy to the Designer before proceeding with the work. All drawings and specifications are instruments of service and the property of the Designer which must be returned at the completion of the work. Drawings are not to be scaled.

VA3 DESIGN
255 Consumers Rd Suite 120
Toronto ON M2J 1R4
t 416.630.2255 f 416.630.4782
va3design.com

BAYVIEW WELLINGTON

municipality: BRADFORD

project name: GREEN VALLEY EAST

date: MAY 2016
drawn by: RC
checked by: -
scale: 3/16" = 1'-0"

CONSTRUCTION NOTES

file name: 16023-CN-2022-A1

CONST NOTE

-

project no. 16023

drawing no. CN9

RICHARD - H:\ARCHIVE\WORKING\2016\16023.BW\Units\CN NOTES\16023-CN-2022-A1.dwg - Wed - Jan 26 2022 - 12:06 PM

All drawings specifications, related documents and design are the copyright property of VA3 DESIGN. Reproduction of this property in whole or in part is strictly prohibited without VA3 DESIGN's written permission.

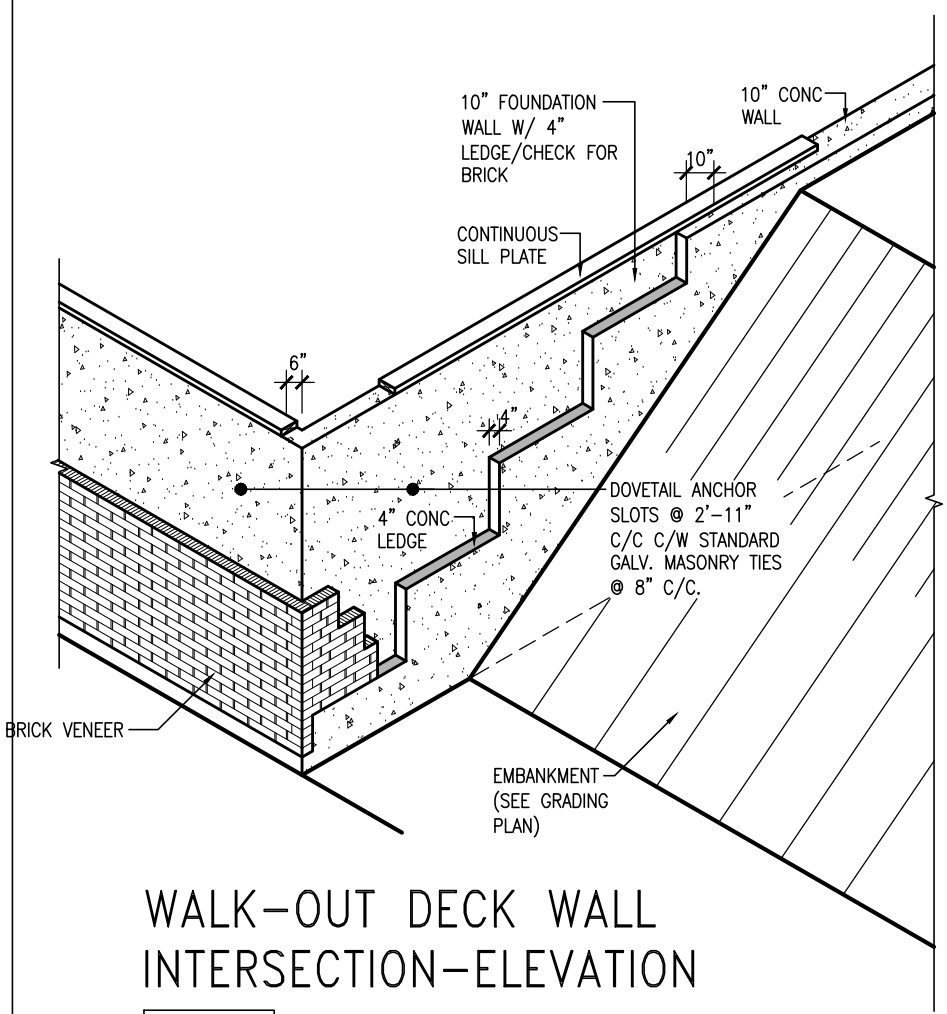

WALK-OUT DECK WALL INTERSECTION-ELEVATION

NOT TO SCALE

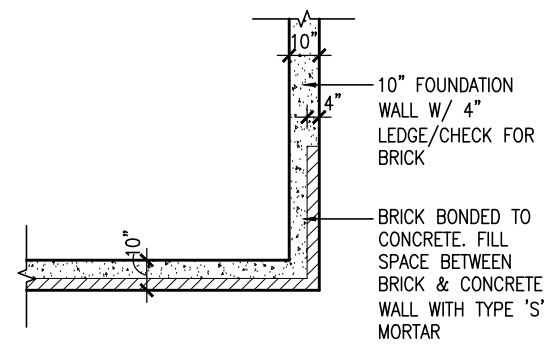

WALK-OUT DECK WALL INTERSECTION-PLAN

NOT TO SCALE

(10" FOUNDATION WALL)

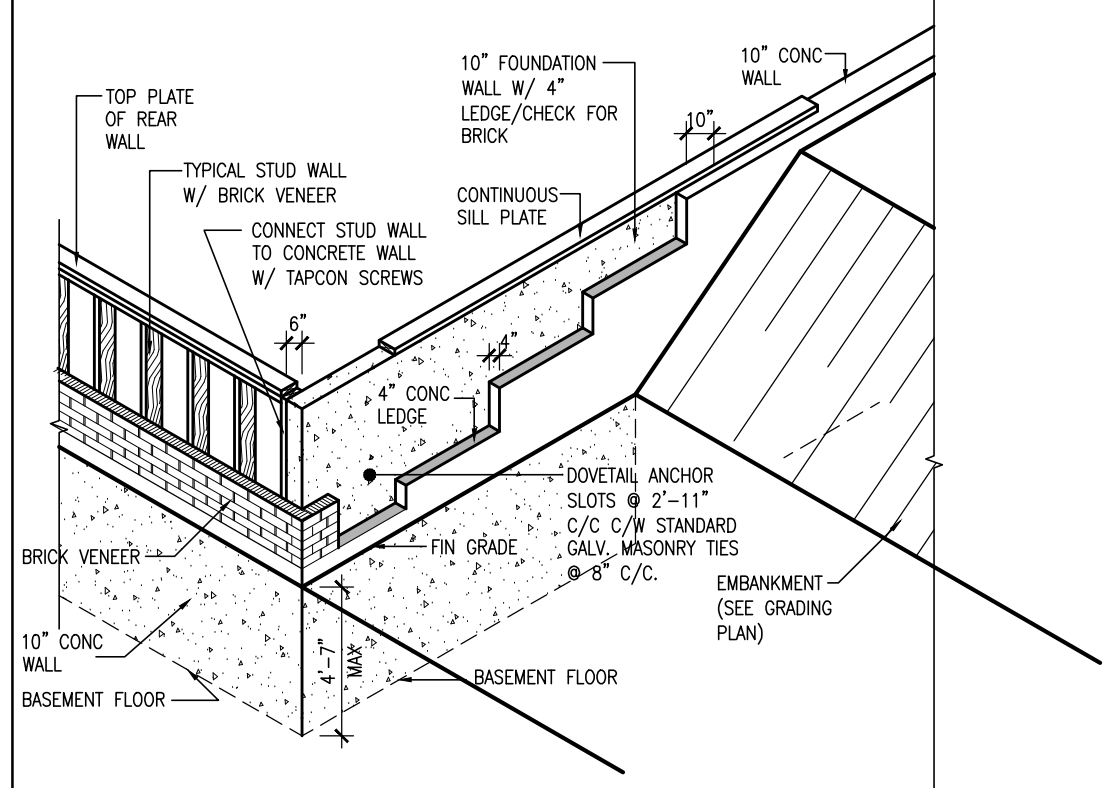

WALK-OUT DECK WALL INTERSECTION-ELEVATION MAX 4'-7" BACKFILL

NOT TO SCALE

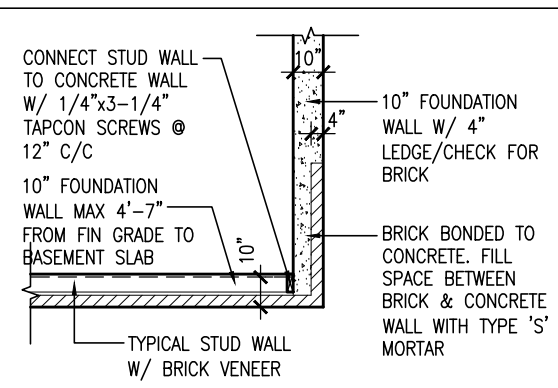

WALK-OUT BASEMENT WALL INTERSECTION-PLAN

NOT TO SCALE

(10" FOUNDATION WALL)

LICENSED PROFESSIONAL ENGINEER
S. J. BOYD
PROVINCE OF ONTARIO
JAN 26, 2022

no.	description	date	by
9	.	.	.
8	.	.	.
7	.	.	.
6	.	.	.
5	.	.	.
4	UPDATE TO 2022	JAN 11-22	RC
3	UPDATE TO 2020	FEB 24-20	RC
2	UPDATE TO 2018	JAN 11-18	RC
1	ISSUE FOR CLIENT REVIEW	AUG 04-17	RC

The undersigned has reviewed and takes responsibility for this design and has the qualifications and meets the requirements set out in the Ontario Building Code to be a Designer.

qualification information

name	signature	BCIN
Wellington Jno-Baptiste		25591

registration information
VA3 Design Inc. 42658

Contractor must verify all dimensions on the job and report any discrepancy to the Designer before proceeding with the work. All drawings and specifications are instruments of service and the property of the Designer which must be returned at the completion of the work. Drawings are not to be scaled.

VA3 DESIGN
255 Consumers Rd Suite 120
Toronto ON M2J 1R4
t 416.630.2255 f 416.630.4782
va3design.com

BAYVIEW WELLINGTON

CONST NOTE

project name: GREEN VALLEY EAST
municipality: BRADFORD
project no.: 16023
date: MAY 2016
CONSTRUCTION NOTES
drawing no.: CN10
drawn by: RC
checked by: -
scale: 3/16" = 1'-0"
file name: 16023-CN-2022-A1

RICHARD - H:\ARCHIVE\WORKING\2016\16023.BW\Units\CN NOTES\16023-CN-2022-A1.dwg - Wed - Jan 26 2022 - 12:06 PM

All drawings specifications, related documents and design are the copyright property of VA3 DESIGN. Reproduction of this property in whole or in part is strictly prohibited without VA3 DESIGN's written permission.

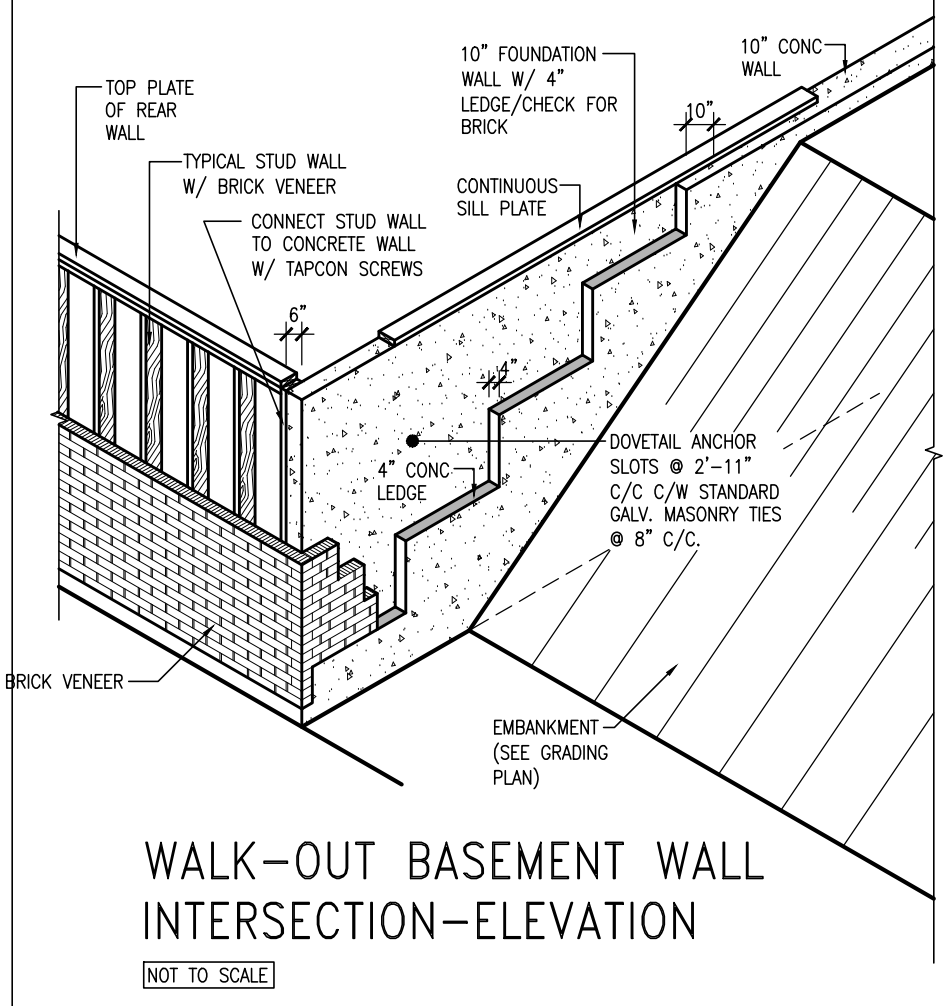

WALK-OUT BASEMENT WALL INTERSECTION-ELEVATION

NOT TO SCALE

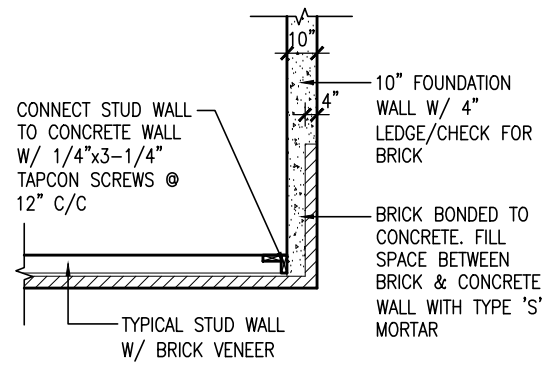

WALK-OUT BASEMENT WALL INTERSECTION-PLAN

NOT TO SCALE

(10" FOUNDATION WALL)

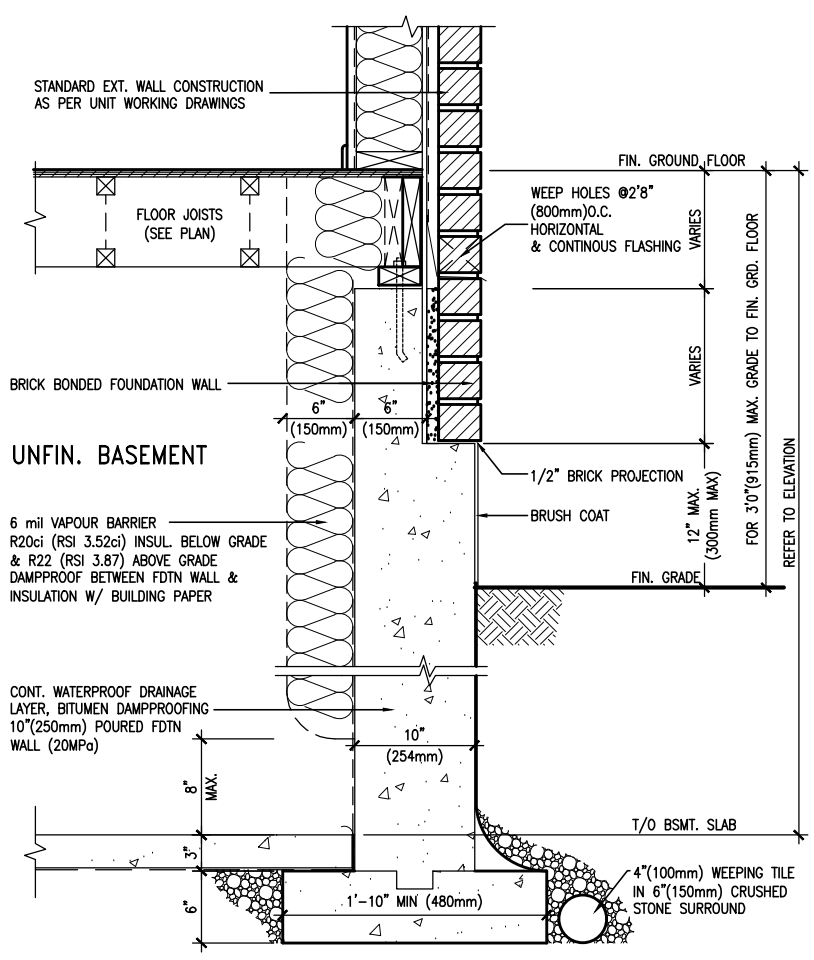

EW3.06x
PKG A1

WALL SECTION FOR GRADE TO FIN. FLOOR MORE THAN 4'7" (1400mm) HEIGHT DIFFERENCE

SCALE: N.T.S.

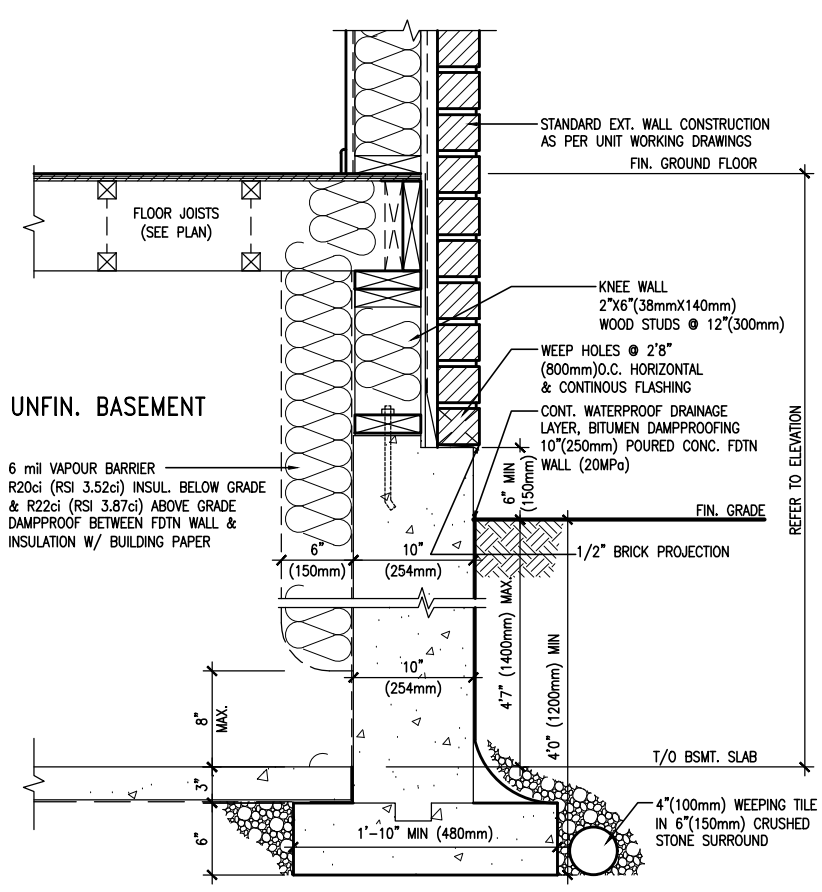

EW3.07x
PKG A1

WALL SECTION FOR GRADE TO BASEMENT SLAB 4'7"(1400mm) MAX. HEIGHT DIFFERENCE

SCALE: N.T.S.

LICENSED PROFESSIONAL ENGINEER
S. J. BOYD
PROVINCE OF ONTARIO
JAN 26, 2022

no.	description	date	by
9	.	.	.
8	.	.	.
7	.	.	.
6	.	.	.
5	.	.	.
4	UPDATE TO 2022	JAN 11-22	RC
3	UPDATE TO 2020	FEB 24-20	RC
2	UPDATE TO 2018	JAN 11-18	RC
1	ISSUE FOR CLIENT REVIEW	AUG 04-17	RC

The undersigned has reviewed and takes responsibility for this design and has the qualifications and meets the requirements set out in the Ontario Building Code to be a Designer.

qualification information

name	signature	BCIN
Wellington Jno-Baptiste		25591
registration information		
VA3 Design Inc.		42658

Contractor must verify all dimensions on the job and report any discrepancy to the Designer before proceeding with the work. All drawings and specifications are instruments of service and the property of the Designer which must be returned at the completion of the work. Drawings are not to be scaled.

VA3 DESIGN
255 Consumers Rd Suite 120
Toronto ON M2J 1R4
t 416.630.2255 f 416.630.4782
va3design.com

BAYVIEW WELLINGTON

CONST NOTE
-

project name	municipality	project no.
GREEN VALLEY EAST	BRADFORD	16023

date			drawing no.
MAY 2016		CONSTRUCTION NOTES	CN11
drawn by	checked by	scale	file name
RC	-	3/16" = 1'-0"	16023-CN-2022-A1

RICHARD - H:\ARCHIVE\WORKING\2016\16023.BW\Units\CN NOTES\16023-CN-2022-A1.dwg - Wed - Jan 26 2022 - 12:06 PM

All drawings specifications, related documents and design are the copyright property of VA3 DESIGN. Reproduction of this property in whole or in part is strictly prohibited without VA3 DESIGN's written permission.

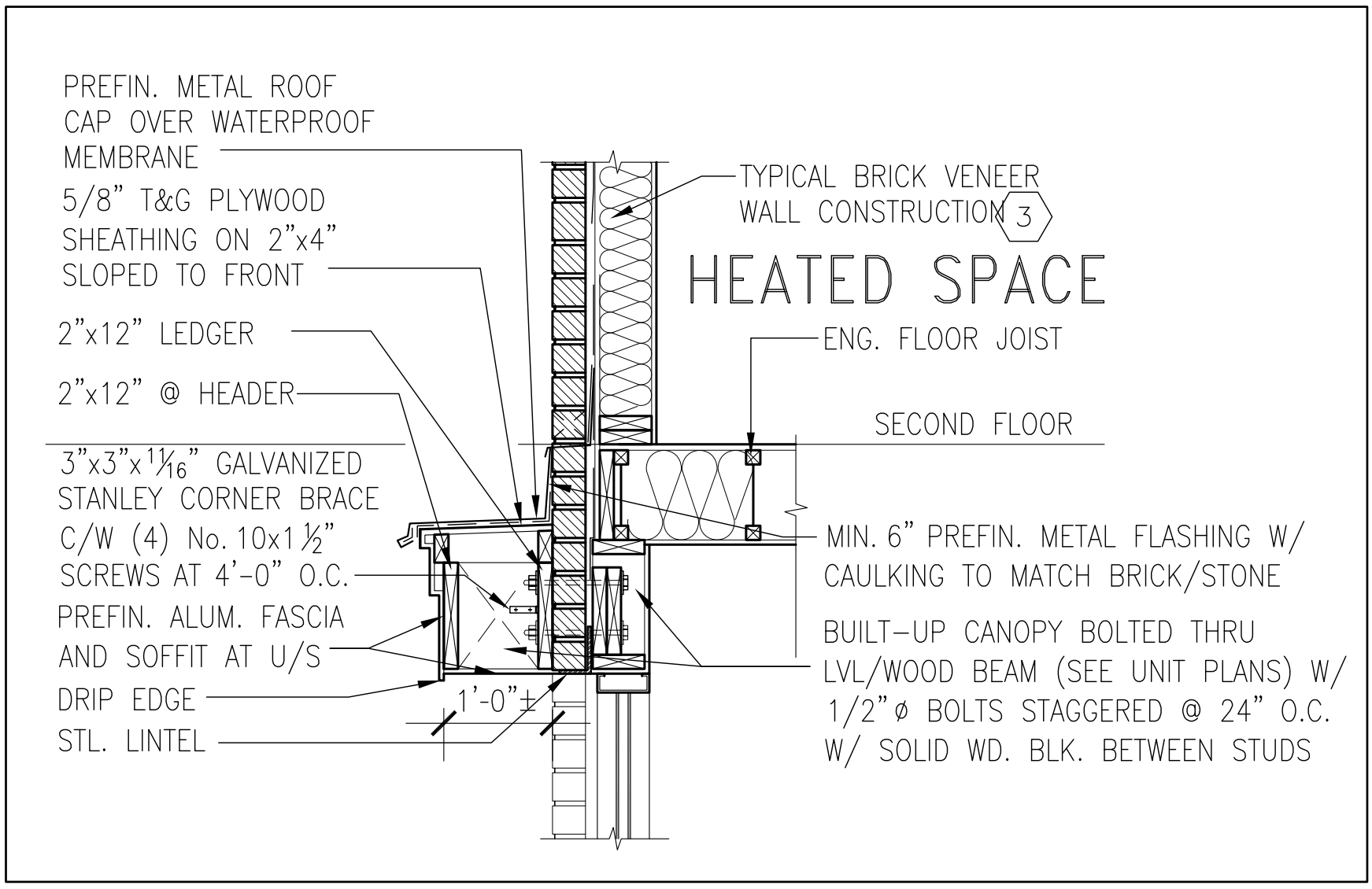

1 / CN12 SECTION THROUGH CANOPY

SCALE 1/2" = 1'-0"

LICENSED PROFESSIONAL ENGINEER
S. J. BOYD
PROVINCE OF ONTARIO
JAN 26, 2022

no.	description	date	by
9	.	.	.
8	.	.	.
7	.	.	.
6	.	.	.
5	.	.	.
4	UPDATE TO 2022	JAN 11-22	RC
3	UPDATE TO 2020	FEB 24-20	RC
2	UPDATE TO 2018	JAN 11-18	RC
1	ISSUE FOR CLIENT REVIEW	AUG 04-17	RC

The undersigned has reviewed and takes responsibility for this design and has the qualifications and meets the requirements set out in the Ontario Building Code to be a Designer.

qualification information
Wellington Jno-Baptiste — 25591 BCIN
name — signature
registration information
VA3 Design Inc. — 42658

Contractor must verify all dimensions on the job and report any discrepancy to the Designer before proceeding with the work. All drawings and specifications are instruments of service and the property of the Designer which must be returned at the completion of the work. Drawings are not to be scaled.

VA3 DESIGN
255 Consumers Rd Suite 120
Toronto ON M2J 1R4
t 416.630.2255 f 416.630.4782
va3design.com

BAYVIEW WELLINGTON

CONST NOTE –

project name: GREEN VALLEY EAST
municipality: BRADFORD
project no.: 16023
date: MAY 2016
CONSTRUCTION NOTES
drawn by: RC
checked by: –
scale: 3/16" = 1'-0"
file name: 16023-CN-2022-A1
drawing no.: CN12

RICHARD – H:\ARCHIVE\WORKING\2016\16023.BW\Units\CN NOTES\16023-CN-2022-A1.dwg – Wed – Jan 26 2022 – 12:09 PM

All drawings specifications, related documents and design are the copyright property of VA3 DESIGN. Reproduction of this property in whole or in part is strictly prohibited without VA3 DESIGN's written permission.

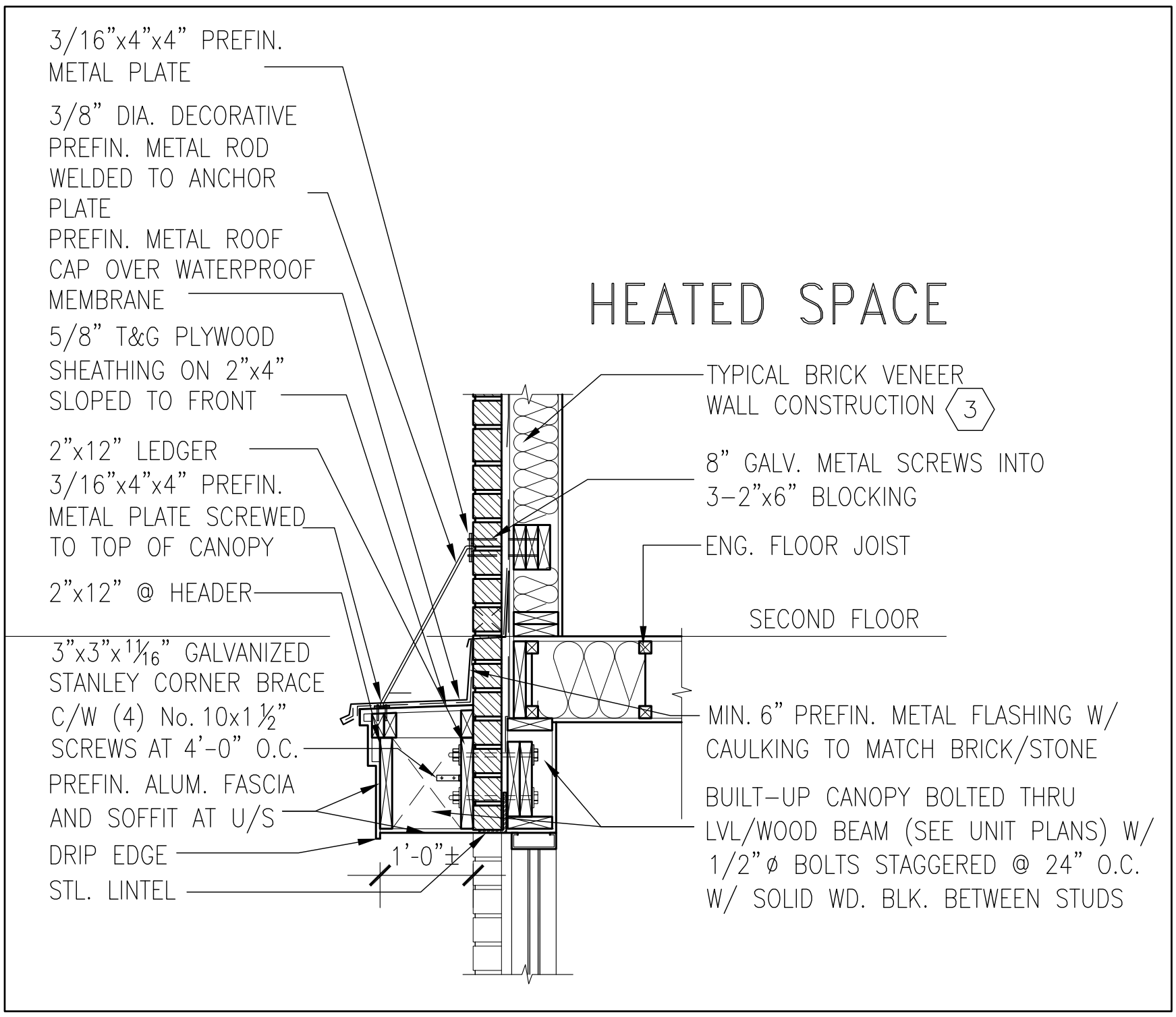

1 / CN13

SECTION THROUGH CANOPY W/ DECORATIVE ROD

SCALE 1/2" = 1'-0"

LICENSED PROFESSIONAL ENGINEER
S. J. BOYD
PROVINCE OF ONTARIO
JAN 26, 2022

no.	description	date	by
9	.	.	.
8	.	.	.
7	.	.	.
6	.	.	.
5	.	.	.
4	UPDATE TO 2022	JAN 11-22	RC
3	UPDATE TO 2020	FEB 24-20	RC
2	UPDATE TO 2018	JAN 11-18	RC
1	ISSUE FOR CLIENT REVIEW	AUG 04-17	RC

The undersigned has reviewed and takes responsibility for this design and has the qualifications and meets the requirements set out in the Ontario Building Code to be a Designer.

qualification information
Wellington Jno-Baptiste — signature — 25591 BCIN
name — registration information
VA3 Design Inc. 42658

Contractor must verify all dimensions on the job and report any discrepancy to the Designer before proceeding with the work. All drawings and specifications are instruments of service and the property of the Designer which must be returned at the completion of the work. Drawings are not to be scaled.

VA3 DESIGN
255 Consumers Rd Suite 120
Toronto ON M2J 1R4
t 416.630.2255 f 416.630.4782
va3design.com

BAYVIEW WELLINGTON

CONST NOTE
-

project name: GREEN VALLEY EAST
municipality: BRADFORD
project no. 16023

date: MAY 2016
CONSTRUCTION NOTES
drawing no. CN13

drawn by: RC
checked by: -
scale: 3/16" = 1'-0"
file name: 16023-CN-2022-A1

RICHARD - H:\ARCHIVE\WORKING\2016\16023.BW\Units\CN NOTES\16023-CN-2022-A1.dwg - Wed - Jan 26 2022 - 12:09 PM

All drawings specifications, related documents and design are the copyright property of VA3 DESIGN. Reproduction of this property in whole or in part is strictly prohibited without VA3 DESIGN's written permission.

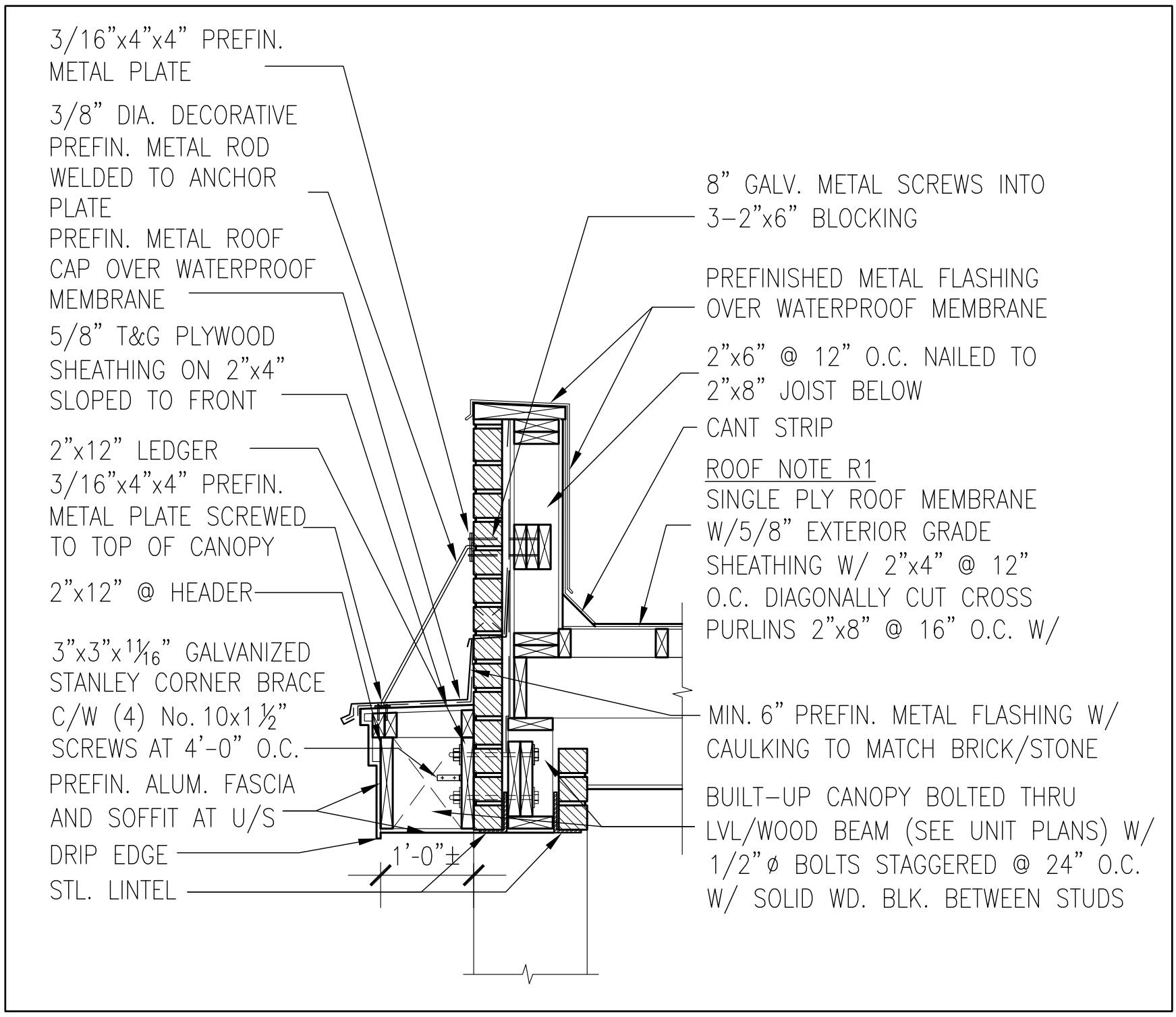

1 / CN14 SECTION THROUGH CANOPY W/ DECORATIVE ROD

SCALE 1/2" = 1'-0"

LICENSED PROFESSIONAL ENGINEER
S. J. BOYD
PROVINCE OF ONTARIO
JAN 26, 2022

no.	description	date	by
9	.	.	.
8	.	.	.
7	.	.	.
6	.	.	.
5	.	.	.
4	UPDATE TO 2022	JAN 11-22	RC
3	UPDATE TO 2020	FEB 24-20	RC
2	UPDATE TO 2018	JAN 11-18	RC
1	ISSUE FOR CLIENT REVIEW	AUG 04-17	RC

The undersigned has reviewed and takes responsibility for this design and has the qualifications and meets the requirements set out in the Ontario Building Code to be a Designer.

qualification information

name	signature	BCIN
Wellington Jno-Baptiste		25591
registration information		
VA3 Design Inc.		42658

Contractor must verify all dimensions on the job and report any discrepancy to the Designer before proceeding with the work. All drawings and specifications are instruments of service and the property of the Designer which must be returned at the completion of the work. Drawings are not to be scaled.

VA3 DESIGN
255 Consumers Rd Suite 120
Toronto ON M2J 1R4
t 416.630.2255 f 416.630.4782
va3design.com

BAYVIEW WELLINGTON

CONST NOTE -

project name: GREEN VALLEY EAST
municipality: BRADFORD
project no.: 16023

date: MAY 2016
CONSTRUCTION NOTES
drawing no.: CN14

drawn by	checked by	scale	file name
RC	-	3/16" = 1'-0"	16023-CN-2022-A1

RICHARD - H:\ARCHIVE\WORKING\2016\16023.BW\Units\CN NOTES\16023-CN-2022-A1.dwg - Wed - Jan 26 2022 - 12:09 PM

All drawings specifications, related documents and design are the copyright property of VA3 DESIGN. Reproduction of this property in whole or in part is strictly prohibited without VA3 DESIGN's written permission.