ASPHALT SHINGLES
12" FINISH O.H.
R.T.M.C
2x6 EXTERIOR WALLS
2X6 FASCIA BOARD

HARDWARE:

HGUS26-2 -(XX)
LJS26DS -(V)

DENOTE:

B1- 2-2X10

ALL CONVENTIONAL ROOF FRAMING TO CONFORM TO PARTS OF THE OBC LATEST EDITION
ROOF RAFTERS THAT MEET OR CROSS OVER TRUSSES ARE TO BE 2"X4"SPF@24"o.c.
WITH A 2"X4"SPF VERTICAL POST TO THE TRUSS UNDER AT EACH CROSS POINT
POSTS LONGER THAN 6' TO BE LATERALLY BRACED SO THAT THE DISTANCE
BETWEEN END POINTS AND BETWEEN ROWS OF BRACING DOES NOT EXCEED 6'

DESIGN LOADS:
SOFFIT
SNOW LOAD 36.3 psf
TC DEAD 3 PSF
BC LIVE 10.5 PSF
BC DEAD 7 PSF

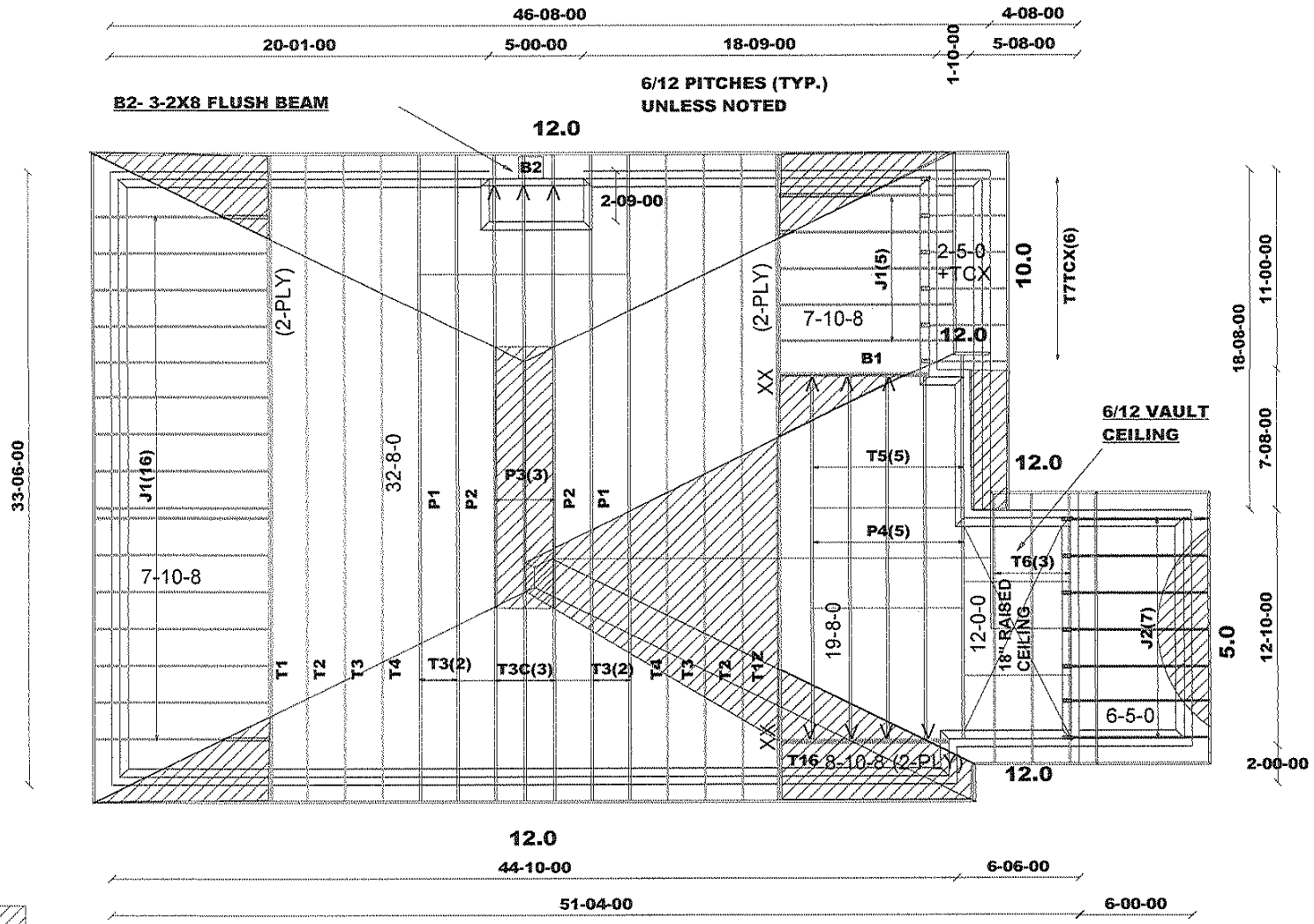

T-160686

DENOTES:
CONVENTIONAL
FRAMING

Town of Innisfil Certified Model
07/03/2018 3:47:12 PM kgervais

m11,029

TAMARACK	Job Track: 42067	Builder / Location: BAYVIEW WELLINGTON INNISFIL	Model / Elevation: S39-1 STARLING 1/ EL:A
	Layout ID: 272820	Project: ALCONA SHORES	THESE DRAWINGS CONSTITUTE THE PROPERTY OF TAMARACK ROOF TRUSSES INC., SHALL NOT BE REPRODUCED, PUBLISHED, OR REDISTRIBUTED IN ANY MANNER OR UTILIZED FOR ANY PURPOSE OTHER THAN THE MANUFACTURE OF TRUSSES BY TAMARACK ROOF TRUSSES INC AND WILL BE RETRACTED BY TAMARACK ROOF TRUSSES INC IF UTLILZED FOR ANY OTHER PURPOSE.
	Plan Log: 88256	Date: 9/18/2017 Designer: EN	Mitek ver 7.5.0

ASPHALT SHINGLES
12" FINISH O.H.
R.T.M.C
2x6 EXTERIOR WALLS
2X6 FASCIA BOARD

HARDWARE:

HGUS26-2 -(XX)
LJS26DS -(V)
LUS26-2 -(VV)
LUS24 -(O)

DENOTE:

B3- 2-2X10
B4 - 2-2X8

ALL CONVENTIONAL ROOF FRAMING TO CONFORM TO PARTB OF THE OBC LATEST EDITION
ROOF RAFTERS THAT MEET OR CROSS OVER TRUSSES ARE TO BE 2"X4"SPF@24"o.c.
WITH A 2"X4"SPF VERTICAL POST TO THE TRUSS UNDER AT EACH CROSS POINT.
POSTS LONGER THAN 6' TO BE LATERALLY BRACED SO THAT THE DISTANCE
BETWEEN END POINTS AND BETWEEN ROWS OF BRACING DOES NOT EXCEED 6'

DESIGN LOADS:
SOFFI
SNOW LOAD 38.3 psf
TC DEAD 3 PSF
BC LIVE 10.5 PSF
BC DEAD 7 PSF

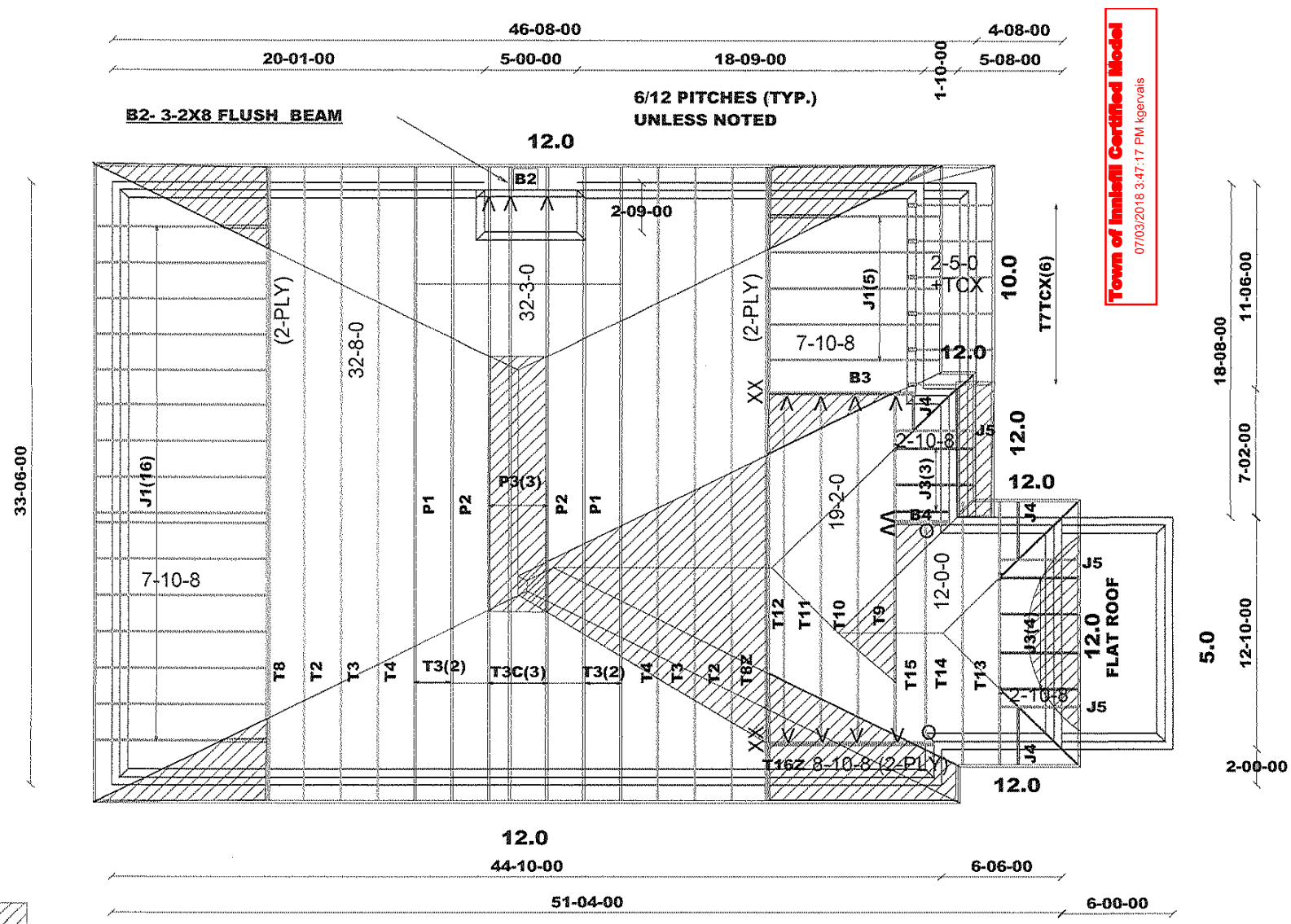

T-160686R

DENOTES:
CONVENTIONAL
FRAMING

Town of Innisfil Certified Model
07/03/2018 3:47:17 PM kgervais

m11,029

TAMARACK	Job Track: 42067	Builder / Location: BAYVIEW WELLINGTON INNISFIL	Model / Elevation: S39-1 STARLING 1 / EL:B
	Layout ID: 272821	Project: ALCONA SHORES	THESE DRAWINGS CONSTITUTE THE PROPERTY OF TAMARACK ROOF TRUSSES INC., SHALL NOT BE REPRODUCED, PUBLISHED, OR REDISTRIBUTED IN ANY MANNER OR UTILIZED FOR ANY PURPOSE OTHER THAN THE MANUFACTURE OF TRUSSES BY TAMARACK ROOF TRUSSES INC AND WILL BE RETRACTED BY TAMARACK ROOF TRUSSES INC IF UTLILZED FOR ANY OTHER PURPOSE.
	Plan Log: 88256	Date: 9/18/2017 Designer: EN	Mitek ver 7.5.0

TAMARACK LUMBER INC.
ALPA LUMBER GROUP

Delivery Shiplist

DATE	09/06/17
SALES REP	Mario

JOB TRACK: 42067 LAYOUT ID: 272820 LOCATION: INNISFIL
BUILDER: BAYVIEW WELLINGTON/ALCONA SHORES SUB-BUILDER:
MODEL: S39-1 ELEVATION: A

ROOF TRUSSES

ROOF TRUSS SPACING: 24.0 IN. O.C. (TYP.)

PROFILE	QTY / PLY	MARK / TYPE	PITCH TC / BC	SPAN	TRUSS HEIGHT	LUMBER TOP	LUMBER BOT	OVERHANG LEFT / RIGHT	HEEL HEIGHT LEFT / RIGHT	LBS. / BFT.	BUNDLE # / STACK #	LOAD BY: / REMARKS
	1 / 2 Ply	T1 / HIP GIRDER	12.00 / 0.00	32-08-00	05-01-04	2 X 6	2 X 6	01-03-08 / 01-03-08	01-10-08 / 01-10-08	399.16 / 249.00		
	1 / 2 Ply	T1Z / HIP GIRDER	12.00 / 0.00	32-08-00	05-01-04	2 X 6	2 X 6	01-03-08 / 01-03-08	01-10-08 / 01-10-08	399.16 / 249.00		
	2	T2 / HIP	12.00 / 0.00	32-08-00	06-01-04	2 X 4	2 X 4	01-03-08 / 01-03-08	01-10-08 / 01-10-08	304.18 / 195.34		
	6	T3 / PIGGYBACK	12.00 / 0.00	32-08-00	07-01-04	2 X 4	2 X 4	01-03-08 / 01-03-08	01-10-08 / 01-10-08	954.66 / 601.02		
	3	T3C / PIGGYBACK	12.00 / 0.00	32-03-00	07-01-04	2 X 4	2 X 4	01-03-08 / 01-08-08	01-10-08 / 02-03-08	477.69 / 303.51		
	2	T4 / HIP	12.00 / 0.00	32-08-00	08-01-04	2 X 4	2 X 4	01-03-08 / 01-03-08	01-10-08 / 01-10-08	335.44 / 209.34		
	5	T5 / PIGGYBACK	12.00 / 0.00	19-08-00	09-00-00	2 X 4	2 X 4	01-03-08 / 01-03-08	01-10-08 / 01-10-08	502.90 / 316.65		
	3	T6 / ROOF	12.00 / 6.00	12-00-00	07-10-08	2 X 4	2 X 4	01-03-08 / 01-03-08	01-10-08 / 01-10-08	195.48 / 126.00		
	6	T7TCX / MONOPITCH	10.00 / 0.00	03-02-04	03-07-00	2 X 4	2 X 4	01-03-08 / 00-00-00	00-11-02 / 03-07-00	103.92 / 72.00		
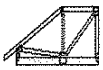	1 / 2 Ply	T16 / HALF HIP	6.00 / 0.00	08-10-08	03-07-08	2 X 4	2 X 6	01-03-08 / 00-00-00	01-02-00 / 03-07-08	84.34 / 52.34		
	2	P1 / PIGGYBACK	12.00 / 0.00	21-00-14	01-10-06	2 X 4	2 X 4	00-00-00 / 00-00-00	00-05-03 / 00-05-03	139.80 / 88.66		
	2	P2 / PIGGYBACK	12.00 / 0.00	21-00-14	02-10-06	2 X 4	2 X 4	00-00-00 / 00-00-00	00-05-03 / 00-05-03	146.66 / 95.34		
	3	P3 / PIGGYBACK	12.00 / 0.00	21-00-14	03-10-06	2 X 4	2 X 4	00-00-00 / 00-00-00	00-05-03 / 00-05-03	232.05 / 149.01		
	5	P4 / PIGGYBACK	12.00 / 0.00	04-03-06	02-06-14	2 X 4	2 X 4	00-00-00 / 00-00-00	00-05-03 / 00-05-03	68.05 / 43.35		
	21	J1 / JACK-PARTIAL	6.00 / 0.00	07-10-08	05-01-04	2 X 4	2 X 4	01-03-08 / 00-00-00	01-02-00 / 05-01-04	635.67 / 405.93		
	7	J2 / JACK-OPEN	5.00 / 0.00	06-05-00	03-00-02	2 X 4	2 X 4	01-03-08 / 00-00-00	00-04-01 / 03-00-02	134.68 / 85.19		

TOTAL # TRUSS= **73.00** TOTAL BFT OF ALL TRUSSES= **3241.68** BFT. TOTAL WEIGHT OF ALL TRUSSES= **5113.84** LBS.

HARDWARE

QTY	ITEM TYPE	MODEL	LENGTH FT-IN-16

DATE	09/06/17
SALES REP	Mario

TAMARACK LUMBER INC.
ALPA LUMBER GROUP

Delivery Shiplist

JOB TRACK: 42067 **LAYOUT ID:** 272820 **LOCATION:** INNISFIL
BUILDER: BAYVIEW WELLINGTON/ALCONA SHORES **SUB-BUILDER:**
MODEL: S39-1 **ELEVATION:** A

HARDWARE

QTY	ITEM TYPE	MODEL	LENGTH FT-IN-16
10	Hangers	LJS26DS	
2	Hangers	HGUS26-2	

TOTAL # ITEMS= **12.00**

TAMARACK LUMBER INC.
ALPA LUMBER GROUP

Delivery Shiplist

DATE	09/06/17
SALES REP	Mario

JOB TRACK: 42067 LAYOUT ID: 272821 LOCATION: INNISFIL
BUILDER: BAYVIEW WELLINGTON/ALCONA SHORES SUB-BUILDER:
MODEL: S39-1 ELEVATION: B

ROOF TRUSSES

ROOF TRUSS SPACING: 24.0 IN. O.C. (TYP.)

PROFILE	QTY / PLY	MARK / TYPE	PITCH TC / BC	SPAN	TRUSS HEIGHT	LUMBER TOP	LUMBER BOT	OVERHANG LEFT / RIGHT	HEEL HEIGHT LEFT / RIGHT	LBS. / BFT.	BUNDLE # / STACK #	LOAD BY: / REMARKS
	2	T2 HIP	12.00 / 0.00	32-08-00	06-01-04	2 X 4	2 X 4	01-03-08 / 01-03-08	01-10-08 / 01-10-08	304.18 / 195.34		
	6	T3 PIGGYBACK	12.00 / 0.00	32-08-00	07-01-04	2 X 4	2 X 4	01-03-08 / 01-03-08	01-10-08 / 01-10-08	954.66 / 601.02		
	3	T3C PIGGYBACK	12.00 / 0.00	32-03-00	07-01-04	2 X 4	2 X 4	01-03-08 / 01-08-08	01-10-08 / 02-03-08	477.69 / 303.51		
	2	T4 HIP	12.00 / 0.00	32-08-00	08-01-04	2 X 4	2 X 4	01-03-08 / 01-03-08	01-10-08 / 01-10-08	335.44 / 209.34		
	6	T7TCX MONOPITCH	10.00 / 0.00	03-02-04	03-07-00	2 X 4	2 X 4	01-03-08 / 00-00-00	00-11-02 / 03-07-00	103.92 / 72.00		
	1 / 2 Ply	T8 HIP GIRDER	12.00 / 0.00	32-08-00	05-01-04	2 X 6	2 X 6	01-03-08 / 01-03-08	01-10-08 / 01-10-08	398.98 / 249.00		
	1 / 2 Ply	T8Z HIP GIRDER	12.00 / 0.00	32-08-00	05-01-04	2 X 6	2 X 6	01-03-08 / 01-03-08	01-10-08 / 01-10-08	398.98 / 249.00		
	1	T9 HIP GIRDER	12.00 / 0.00	19-02-00	04-09-00	2 X 4	2 X 6	00-00-00 / 00-00-00	01-10-08 / 01-10-08	97.08 / 61.67		
	1	T10 HIP	12.00 / 0.00	19-02-00	06-09-00	2 X 4	2 X 4	00-00-00 / 00-00-00	01-10-08 / 01-10-08	87.57 / 56.83		
	1	T11 HIP	12.00 / 0.00	19-02-00	08-09-00	2 X 4	2 X 4	00-00-00 / 00-00-00	01-10-08 / 01-10-08	93.91 / 60.67		
	1	T12 HIP	12.00 / 0.00	19-02-00	10-09-00	2 X 4	2 X 4	00-00-00 / 00-00-00	01-10-08 / 01-10-08	119.30 / 75.67		
	1	T13 HIP GIRDER	12.00 / 0.00	12-00-00	04-09-00	2 X 4	2 X 4	01-03-08 / 01-03-08	01-10-08 / 01-10-08	61.45 / 41.17		
	1	T14 HIP	12.00 / 0.00	12-00-00	06-09-00	2 X 4	2 X 4	01-03-08 / 01-03-08	01-10-08 / 01-10-08	63.26 / 41.50		
	1	T15 COMMON	12.00 / 0.00	12-00-00	07-10-08	2 X 4	2 X 4	00-00-00 / 00-00-00	01-10-08 / 01-10-08	59.40 / 38.67		
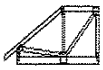	1 / 2 Ply	T16Z HALF HIP	6.00 / 0.00	08-10-08	03-07-08	2 X 4	2 X 6	01-03-08 / 00-00-00	01-02-00 / 03-07-08	84.34 / 52.34		
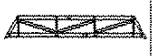	2	P1 PIGGYBACK	12.00 / 0.00	21-00-14	01-10-06	2 X 4	2 X 4	00-00-00 / 00-00-00	00-05-03 / 00-05-03	139.80 / 88.66		
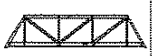	2	P2 PIGGYBACK	12.00 / 0.00	21-00-14	02-10-06	2 X 4	2 X 4	00-00-00 / 00-00-00	00-05-03 / 00-05-03	146.66 / 95.34		
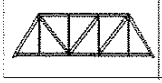	3	P3 PIGGYBACK	12.00 / 0.00	21-00-14	03-10-06	2 X 4	2 X 4	00-00-00 / 00-00-00	00-05-03 / 00-05-03	232.05 / 149.01		

TAMARACK LUMBER INC.
ALPA LUMBER GROUP

Delivery Shiplist

DATE	09/06/17
SALES REP	Mario

JOB TRACK: 42067 **LAYOUT ID:** 272821 **LOCATION:** INNISFIL
BUILDER: BAYVIEW WELLINGTON/ALCONA SHORES **SUB-BUILDER:**
MODEL: S39-1 **ELEVATION:** B

ROOF TRUSSES

ROOF TRUSS SPACING: 24.0 IN. O.C. (TYP.)

PROFILE	QTY / PLY	MARK / TYPE	PITCH TC / BC	SPAN	TRUSS HEIGHT	LUMBER TOP	LUMBER BOT	OVERHANG LEFT / RIGHT	HEEL HEIGHT LEFT / RIGHT	LBS. / BFT.	BUNDLE # / STACK #	LOAD BY: / REMARKS
	21	J1 JACK-PARTIAL	6.00 / 0.00	07-10-08	05-01-04	2 X 4	2 X 4	01-03-08 / 00-00-00	01-02-00 / 05-01-04	635.67 / 405.93		
	7	J3 JACK-OPEN	12.00 / 0.00	02-10-08	04-09-00	2 X 4	2 X 4	01-03-08 / 00-00-00	01-10-08 / 04-09-00	95.34 / 63.00		
	3	J4 JACK-OPEN	12.00 / 0.00	01-10-08	03-07-15	2 X 4	2 X 4	01-03-08 / -00-01-01	01-10-08 / 00-03-08	27.30 / 18.00		
	3	J5 JACK-OPEN	12.00 / 0.00	02-10-08	03-07-15	2 X 4	2 X 4	01-03-08 / -01-01-01	01-10-08 / 00-03-08	30.72 / 20.01		

TOTAL # TRUSS= **73.00** TOTAL BFT OF ALL TRUSSES= **3147.68** BFT. TOTAL WEIGHT OF ALL TRUSSES= **4947.70** LBS.

HARDWARE

QTY	ITEM TYPE	MODEL	LENGTH FT-IN-16
11	Hangers	LJS26DS	
2	Hangers	LUS24	
1	Hangers	LUS26-2	
2	Hangers	HGUS26-2	

TOTAL # ITEMS= **16.00**

JOB NAME	TRUSS NAME	QUANTITY	PLY	JOB DESC. 42067	DRWG NO.
272820	T1	1	2	TRUSS DESC.	

Tamarack Roof Truss, Burlington

Version 8.030 S Oct 5 2016 MiTek Industries, Inc. Mon Sep 11 07:41:51 2017 Page 1

ID:ICtWqkzHJcrjayyEloEouzy77mm-h?0Kft_0RSrm6mCq6nxEUQyCU2XbnLaagFXIJMyenW_

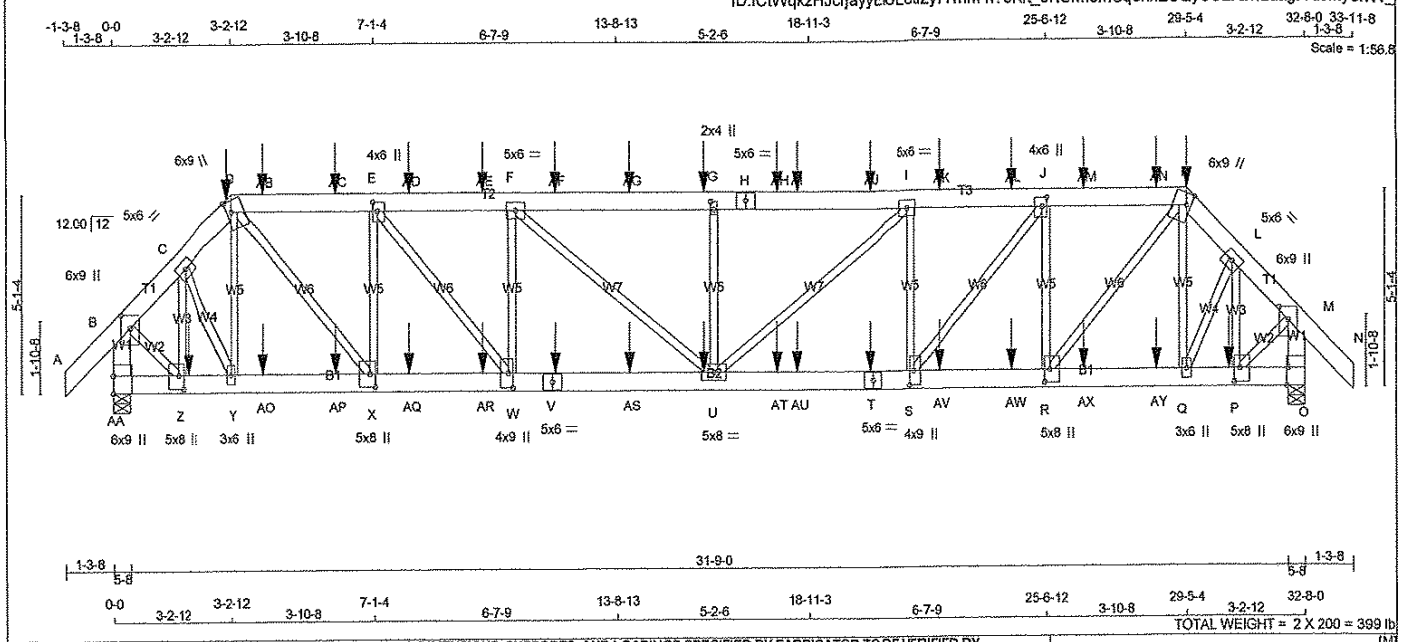

TOTAL WEIGHT = 2 X 200 = 399 lb

(M)

LUMBER

N. L. G. A. RULES

CHORDS	SIZE		LUMBER	DESCR.
A - D	2x6	DRY	No.2	SPF
D - H	2x6	DRY	No.2	SPF
H - K	2x6	DRY	No.2	SPF
K - N	2x6	DRY	No.2	SPF
AA- B	2x6	DRY	No.2	SPF
O - M	2x6	DRY	No.2	SPF
AA- V	2x6	DRY	No.2	SPF
V - T	2x6	DRY	No.2	SPF
T - O	2x6	DRY	No.2	SPF
ALL WEBS EXCEPT	2x3	DRY	No.2	SPF

DRY: SEASONED LUMBER.

DESIGN CONSISTS OF 2 TRUSSES BUILT SEPARATELY THEN FASTENED TOGETHER AS FOLLOWS:

CHORDS	#ROWS	SURFACE SPACING (IN)	LOAD(PLF)
TOP CHORDS : (0.122"X3") SPIRAL NAILS			
A- D	2	12	SIDE(122.0)
D- H	2	12	SIDE(183.1)
H- K	2	12	SIDE(61.0)
K- N	2	12	SIDE(122.0)
AA- B	2	12	TOP
O- M	2	12	TOP
BOTTOM CHORDS : (0.122"X3") SPIRAL NAILS			
AA- V	2	12	SIDE(183.1)
V- T	2	12	SIDE(183.1)
T- O	2	12	SIDE(183.1)
WEBS : (0.122"X3") SPIRAL NAILS			
2x3	1	6	

NAILS TO BE DRIVEN FROM ONE SIDE ONLY.

GIRDER NAILING ASSUMES NAILED HANGERS ARE FASTENED WITH MIN. 3-0 INCH NAILS.

TOP - COMPONENTS ARE LOADED FROM THE TOP AND MUST BE PLACED ON TOP EDGE OF ALL PLIES FOR THE LOAD TO BE TRANSFERRED TO EACH PLY.

SIDE - PLF SHOWN IS THE EQUIVALENT UDL APPLIED TO ONE SIDE THAT THE CORRESPONDING NAILING PATTERN SHALL BE CAPABLE OF TRANSFERING. REMAINING PLF MUST BE APPLIED ON THE OPPOSITE SIDE OR ON THE TOP.

PLATES (table is in inches)

JT	TYPE	PLATES	W	LEN	Y	X
B	TMVW+p	MT20	6.0	9.0	4.00	3.00
C, F, I, L						
C	TMWW-t	MT20	5.0	6.0		
D	TTWW+m	MT20	6.0	9.0	3.50	1.50
E	TMWW+t	MT20	4.0	6.0	2.75	1.50
G	TMW+w	MT20	2.0	4.0	2.50	1.00
H	TS-t	MT20	5.0	6.0		
J	TMWW+t	MT20	4.0	6.0	2.75	1.50
K	TTWW+m	MT20	6.0	9.0	3.50	1.50
M	TMVW+p	MT20	6.0	9.0	4.00	3.00
O	BMV1+t	MT20	6.0	9.0	Edge	0.50
P	BMWW+t	MT20	5.0	8.0	4.25	1.75
Q	BMWW+t	MT20	3.0	6.0		
R	BMWW+t	MT20	5.0	8.0	4.00	1.75
S	BMWW+t	MT20	4.0	9.0	4.50	1.50
T	BS-t	MT20	5.0	6.0		
U	BMWWW-t	MT20	5.0	8.0		

DIMENSIONS, SUPPORTS AND LOADINGS SPECIFIED BY FABRICATOR TO BE VERIFIED BY BUILDING DESIGNER

BEARINGS

JT	FACTORED GROSS REACTION VERT	HORZ	MAXIMUM FACTORED GROSS REACTION DOWN	HORZ	UPLIFT	INPUT BRG IN-SX	REQRD BRG IN-SX
AA	6516	0	6516	0	0	5-8	5-8
O	6562	0	6562	0	0	5-8	5-8

UNFACTORED REACTIONS

JT	1ST LCASE COMBINED	MAX./MIN. COMPONENT REACTIONS SNOW	LIVE	PERM.LIVE	WIND	DEAD	SOIL
AA	5036	3383 / 0	833 / 0	0 / 0	0 / 0	820 / 0	0 / 0
O	5072	3406 / 0	839 / 0	0 / 0	0 / 0	827 / 0	0 / 0

BEARING MATERIAL TO BE SPF NO.2 OR BETTER AT JOINT(S) AA, O

BRACING

TOP CHORD TO BE SHEATHED OR MAX. PURLIN SPACING = 3.39 FT.
MAX. UNBRACED BOTTOM CHORD LENGTH = 10.00 FT: OR RIGID CEILING DIRECTLY APPLIED.

ALL PITCH BREAKS AND PERIMETER CORNER JOINTS MUST BE LATERALLY RESTRAINED.

LOADING

TOTAL LOAD CASES: (4)

CHORDS

MEMB. FR-TO	MAX. FACTORED FORCE (LBS)	FROM	TO	VERT. LOAD LC1 (PLF)	MAX CSI (LC)	MAX. UNBRAC LENGTH
A- B	0 / 63	-122.2	-122.2	0.05 (1)	10.00	
B- C	-5136 / 0	-122.2	-122.2	0.08 (1)	5.10	
C- D	-6057 / 0	-122.2	-122.2	0.07 (1)	4.79	
D-AB	-7731 / 0	-122.2	-122.2	0.20 (1)	4.22	
AB-AC	-7731 / 0	-122.2	-122.2	0.20 (1)	4.22	
AC- E	-7731 / 0	-122.2	-122.2	0.20 (1)	4.22	
E-AD	-10081 / 0	-122.2	-122.2	0.23 (1)	3.74	
AD-AE	-10081 / 0	-122.2	-122.2	0.23 (1)	3.74	
AE- F	-10081 / 0	-122.2	-122.2	0.23 (1)	3.74	
F-AF	-11535 / 0	-122.2	-122.2	0.37 (1)	3.40	
AF-AG	-11535 / 0	-122.2	-122.2	0.37 (1)	3.40	
AG- G	-11535 / 0	-122.2	-122.2	0.37 (1)	3.40	
G- H	-11535 / 0	-122.2	-122.2	0.39 (1)	3.38	
H-AH	-11535 / 0	-122.2	-122.2	0.39 (1)	3.38	
AH-AI	-11535 / 0	-122.2	-122.2	0.39 (1)	3.38	
AI-AJ	-11535 / 0	-122.2	-122.2	0.39 (1)	3.38	
AJ- I	-11535 / 0	-122.2	-122.2	0.39 (1)	3.38	
I-AK	-10232 / 0	-122.2	-122.2	0.25 (1)	3.70	
AK-AL	-10232 / 0	-122.2	-122.2	0.25 (1)	3.70	
AL- J	-10232 / 0	-122.2	-122.2	0.25 (1)	3.70	
J-AM	-7793 / 0	-122.2	-122.2	0.20 (1)	4.21	
AM-AN	-7793 / 0	-122.2	-122.2	0.20 (1)	4.21	
AN- K	-7793 / 0	-122.2	-122.2	0.20 (1)	4.21	
K- L	-6108 / 0	-122.2	-122.2	0.07 (1)	4.77	
L- M	-5174 / 0	-122.2	-122.2	0.08 (1)	5.08	
M- N	0 / 63	-122.2	-122.2	0.05 (1)	10.00	
AA- B	-6498 / 0	0.0	0.0	0.24 (1)	5.83	
O- M	-6545 / 0	0.0	0.0	0.24 (1)	5.81	
AA- Z	0 / 0	-28.0	-28.0	0.01 (3)	10.00	
Z- Y	0 / 3582	-28.0	-28.0	0.34 (1)	10.00	
Y-AO	0 / 4213	-28.0	-28.0	0.38 (1)	10.00	
AO-AP	0 / 4213	-28.0	-28.0	0.38 (1)	10.00	
AP- X	0 / 4213	-28.0	-28.0	0.38 (1)	10.00	
X-AQ	0 / 7731	-28.0	-28.0	0.59 (1)	10.00	
AQ-AR	0 / 7731	-28.0	-28.0	0.59 (1)	10.00	
AR- W	0 / 7731	-28.0	-28.0	0.59 (1)	10.00	
W- V	0 / 10081	-28.0	-28.0	0.83 (1)	10.00	
V-AS	0 / 10081	-28.0	-28.0	0.83 (1)	10.00	
AS- U	0 / 10081	-28.0	-28.0	0.83 (1)	10.00	

WEBS

MEMB. FR-TO	MAX. FACTORED FORCE (LBS)	MAX CSI (LC)
Y- D	-735 / 0	0.13 (1)
W- F	-1943 / 0	0.34 (1)
F- U	0 / 1908	0.24 (1)
U- G	-905 / 0	0.16 (1)
U- I	0 / 1711	0.21 (1)
S- I	-1845 / 0	0.32 (1)
Q- K	-730 / 0	0.13 (1)
C- Y	0 / 1561	0.19 (1)
Q- L	0 / 1583	0.20 (1)
P- L	-2301 / 0	0.24 (1)
P- M	0 / 4415	0.55 (1)
Z- C	-2272 / 0	0.24 (1)
B- Z	0 / 4362	0.54 (1)
E- W	0 / 3730	0.46 (1)
D- X	0 / 5459	0.68 (1)
X- E	-3389 / 0	0.59 (1)
R- K	0 / 5498	0.68 (1)
S- J	0 / 3872	0.48 (1)
R- J	-3480 / 0	0.61 (1)

LICENSED PROFESSIONAL ENGINEER
9117
S. KATSOULAKOS
PROVINCE OF ONTARIO

DWG NO. TAM-15734-17
STRUCTURAL COMPONENT ONLY

DESIGN CRITERIA

*** SPECIAL LOADS ANALYSIS ***
GEOMETRY AND/OR BASIC LOADS CHANGED BY USER.
LOADS WERE DERIVED FROM USER INPUT
NO FURTHER MODIFICATIONS WERE MADE

SPECIFIED LOADS:

TOP CH.	LL	=	38.3	PSF
	DL	=	3.0	PSF
BOT CH.	LL	=	10.5	PSF
	DL	=	7.0	PSF
TOTAL LOAD		=	58.7	PSF

SPACING = 24.0 IN. C/C

LOADING IN FLAT SECTION BASED ON A SLOPE OF 6.00/12

*** NON STANDARD GIRDER ***
ADDT'L USER-DEFINED LOADS APPLIED TO ALL LOAD CASES.

THIS TRUSS IS DESIGNED FOR RESIDENTIAL OR SMALL BUILDING REQUIREMENTS OF PART 9, NBCC 2010

THIS DESIGN COMPLIES WITH:
- PART 9 OF OBC 2012 , BCBC 2012 , ABC 2014
- CSA 086-09
- TPIC 2011

DESIGN ASSUMPTIONS
-OVERHANG NOT TO BE ALTERED OR CUT OFF.

(55 % OF 54.4 P.S.F. G.S.L. PLUS 8.4 P.S.F. RAIN LOAD) EQUALS 38.3 P.S.F. SPECIFIED ROOF LIVE LOAD

ALLOWABLE DEFL.(LL)= L/360 (1.09")
CALCULATED VERT. DEFL.(LL) = L/999 (0.28")
ALLOWABLE DEFL.(TL)= L/360 (1.09")
CALCULATED VERT. DEFL.(TL) = L/936 (0.42")

CSI: TC=0.39 (G-I:1) , BC=0.92 (S-U:1) , WB=0.68 (K-R:1) , SSI=0.21 (S-U:1)

DOL LUMBER=1.00 NAIL=1.00 LS BEND=1.00 COMP=1.00 SHEAR=1.00 TENS= 1.00

COMPANION LIVE LOAD FACTOR = 0.50

AUTOSOLVE HEELS OFF

TRUSS PLATE MANUFACTURER IS NOT RESPONSIBLE FOR QUALITY CONTROL IN THE TRUSS MANUFACTURING PLANT .

NAIL VALUES

PLATE	GRIP(DRY) (PSI) MAX	MIN	SHEAR (PLI) MAX	MIN	SECTION (PLI) MAX	MIN
MT20	618	354	1667	822	2284	1656

PLATE PLACEMENT TOL. = 0.250 inches

PLATE ROTATION TOL. = 5.0 Deg.

CONTINUED ON PAGE 2

JOB NAME	TRUSS NAME	QUANTITY	PLY	JOB DESC. 42067	DRWG NO.
272820	T1	1	2	TRUSS DESC.	

PLATES (table is in inches)

JT	TYPE	PLATES	W	LEN	Y	X
V	BS-t	MT20	5.0	6.0		
W	BMWW+t	MT20	4.0	9.0	4.50	1.50
X	BMWW+t	MT20	5.0	8.0	4.00	1.75
Y	BMWW+t	MT20	3.0	6.0		
Z	BMWW+t	MT20	5.0	8.0	4.25	1.75
AA	BMV1+t	MT20	6.0	9.0	5.50	

Edge - INDICATES REFERENCE CORNER OF PLATE TOUCHES EDGE OF CHORD.

HANGERS NOTES

1) SPECIAL HANGER(S) OR CONNECTION(S) REQUIRED TO SUPPORT CONCENTRATED LOAD(S) 429.8 lbs FACTORED DOWN AT 29-5-4, 429.8 lbs FACTORED DOWN AT 3-2-12, 72.2 lbs FACTORED DOWN AT 4-0-12, 62.0 lbs FACTORED DOWN AT 6-0-12, 62.0 lbs FACTORED DOWN AT 8-0-12, 62.0 lbs FACTORED DOWN AT 10-0-12, 62.0 lbs FACTORED DOWN AT 12-0-12, 62.0 lbs FACTORED DOWN AT 14-0-12, 62.0 lbs FACTORED DOWN AT 16-0-12, 62.0 lbs FACTORED DOWN AT 18-0-12, 62.0 lbs FACTORED DOWN AT 18-7-4, 62.0 lbs FACTORED DOWN AT 20-7-4, 62.0 lbs FACTORED DOWN AT 22-7-4, 62.0 lbs FACTORED DOWN AT 24-7-4, AND 62.0 lbs FACTORED DOWN AT 26-7-4, AND 72.2 lbs FACTORED DOWN AT 28-7-4 ON TOP CHORD, AND 379.2 lbs FACTORED DOWN AT 2-0-12, 379.2 lbs FACTORED DOWN AT 4-0-12, 379.2 lbs FACTORED DOWN AT 6-0-12, 379.2 lbs FACTORED DOWN AT 8-0-12, 379.2 lbs FACTORED DOWN AT 10-0-12, 379.2 lbs FACTORED DOWN AT 12-0-12, 379.2 lbs FACTORED DOWN AT 14-0-12, 379.2 lbs FACTORED DOWN AT 16-0-12, 379.2 lbs FACTORED DOWN AT 18-0-12, 379.2 lbs FACTORED DOWN AT 18-7-4, 379.2 lbs FACTORED DOWN AT 20-7-4, 379.2 lbs FACTORED DOWN AT 22-7-4, 379.2 lbs FACTORED DOWN AT 24-7-4, 379.2 lbs FACTORED DOWN AT 26-7-4, AND 379.2 lbs FACTORED DOWN AT 28-7-4, AND 379.2 lbs FACTORED DOWN AT 30-7-4 ON BOTTOM CHORD. DESIGN FOR UNSPECIFIED CONNECTION(S) IS DELEGATED TO THE BUILDING DESIGNER.

LOADING

TOTAL LOAD CASES: (4)

CHORDS

MEMB. FR-TO	MAX. FACTORED FORCE (LBS)	FACTORED VERT. LOAD LC1 (PLF) FROM	TO	MAX CSI (LC)	MAX. UNBRAC LENGTH
U-AT	0 / 10232	-28.0	-28.0	0.92 (1)	10.00
AT-AU	0 / 10232	-28.0	-28.0	0.92 (1)	10.00
AU- T	0 / 10232	-28.0	-28.0	0.92 (1)	10.00
T- S	0 / 10232	-28.0	-28.0	0.92 (1)	10.00
S-AV	0 / 7792	-28.0	-28.0	0.66 (1)	10.00
AV-AW	0 / 7792	-28.0	-28.0	0.66 (1)	10.00
AW- R	0 / 7792	-28.0	-28.0	0.66 (1)	10.00
R-AX	0 / 4249	-28.0	-28.0	0.38 (1)	10.00
AX-AY	0 / 4249	-28.0	-28.0	0.38 (1)	10.00
AY- Q	0 / 4249	-28.0	-28.0	0.38 (1)	10.00
Q- P	0 / 3609	-28.0	-28.0	0.34 (1)	10.00
P- O	0 / 0	-28.0	-28.0	0.01 (3)	10.00

WEBS

MEMB. FR-TO	MAX. FACTORED FORCE (LBS)	MAX CSI (LC)

FACTORED CONCENTRATED LOADS (LBS)

JT	LOC.	LC1	MAX-	MAX+	FACE	DIR.	TYPE
D	3-2-12	-26	-29	---	FRONT	VERT	DEAD
D	3-2-12	-404	-404	---	FRONT	VERT	SNOW
G	16-0-12	-62	-62	---	FRONT	VERT	TOTAL
K	29-5-4	-26	-29	---	FRONT	VERT	DEAD
K	29-5-4	-404	-404	---	FRONT	VERT	SNOW
P	30-7-4	-379	-379	---	FRONT	VERT	TOTAL
T	20-7-4	-379	-379	---	FRONT	VERT	TOTAL
U	16-0-12	-379	-379	---	FRONT	VERT	TOTAL
V	12-0-12	-379	-379	---	FRONT	VERT	TOTAL
Z	2-0-12	-379	-379	---	FRONT	VERT	TOTAL
AB	4-0-12	-72	-72	---	FRONT	VERT	TOTAL
AC	6-0-12	-62	-62	---	FRONT	VERT	TOTAL
AD	8-0-12	-62	-62	---	FRONT	VERT	TOTAL
AE	10-0-12	-62	-62	---	FRONT	VERT	TOTAL
AF	12-0-12	-62	-62	---	FRONT	VERT	TOTAL
AG	14-0-12	-62	-62	---	FRONT	VERT	TOTAL
AH	18-0-12	-62	-62	---	FRONT	VERT	TOTAL
AI	18-7-4	-62	-62	---	FRONT	VERT	TOTAL
AJ	20-7-4	-62	-62	---	FRONT	VERT	TOTAL
AK	22-7-4	-62	-62	---	FRONT	VERT	TOTAL
AL	24-7-4	-62	-62	---	FRONT	VERT	TOTAL
AM	26-7-4	-62	-62	---	FRONT	VERT	TOTAL
AN	28-7-4	-72	-72	---	FRONT	VERT	TOTAL
AO	4-0-12	-379	-379	---	FRONT	VERT	TOTAL
AP	6-0-12	-379	-379	---	FRONT	VERT	TOTAL
AQ	8-0-12	-379	-379	---	FRONT	VERT	TOTAL
AR	10-0-12	-379	-379	---	FRONT	VERT	TOTAL
AS	14-0-12	-379	-379	---	FRONT	VERT	TOTAL
AT	18-0-12	-379	-379	---	FRONT	VERT	TOTAL
AU	18-7-4	-379	-379	---	FRONT	VERT	TOTAL
AV	22-7-4	-379	-379	---	FRONT	VERT	TOTAL
AW	24-7-4	-379	-379	---	FRONT	VERT	TOTAL
AX	26-7-4	-379	-379	---	FRONT	VERT	TOTAL
AY	28-7-4	-379	-379	---	FRONT	VERT	TOTAL

JSI GRIP= 0.89 (L) (INPUT = 0.90)
JSI METAL= 0.87 (T) (INPUT = 1.00)

LICENSED PROFESSIONAL ENGINEER
9/11/17
S. KATSOULAKOS
PROVINCE OF ONTARIO

DWG NO. TAM 45734-17
STRUCTURAL
COMPONENT ONLY

JOB NAME	TRUSS NAME	QUANTITY	PLY	JOB DESC. 42067	DRWG NO.
272820	T1Z	1	2	TRUSS DESC.	

Tamarack Roof Truss, Burlington

Version 8.030 S Oct 5 2016 MiTek Industries, Inc. Mon Sep 11 07:41:52 2017 Page 1

ID:ICtWqkzHJcrjayyEloEouzy77mm-ABZisD_eCmzdkwn0gVST0dVPoSvSWnKjvvHrqoyenVz

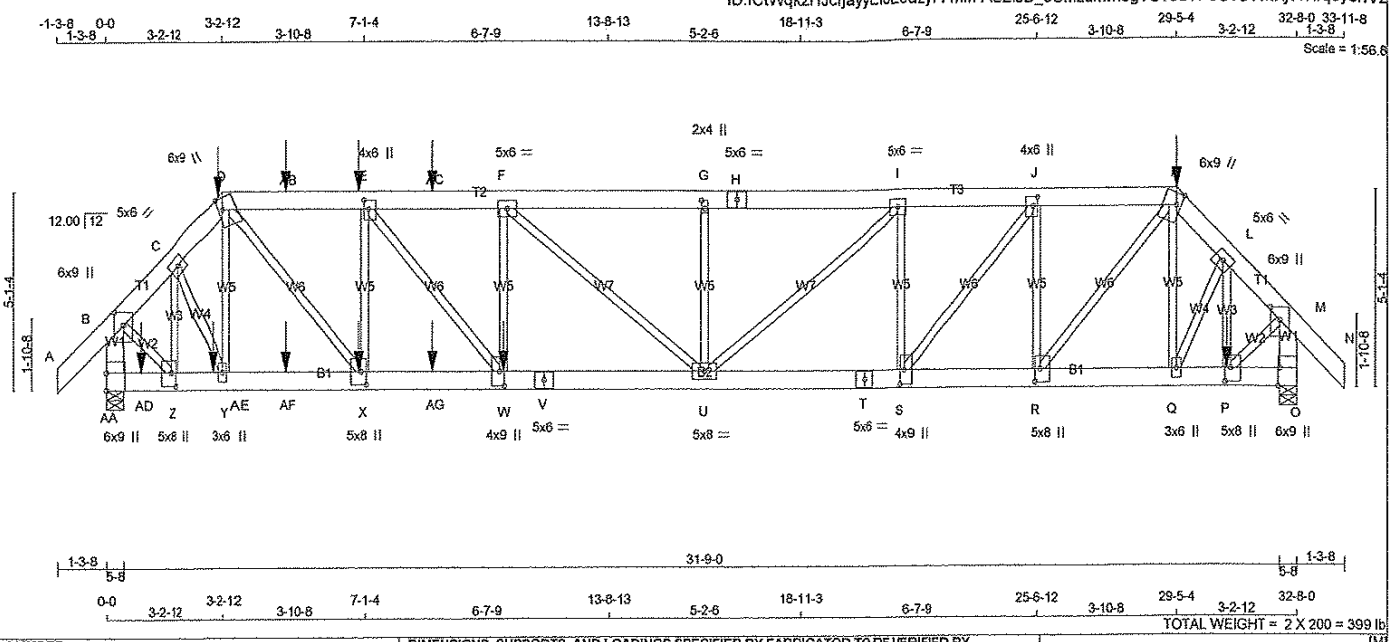

TOTAL WEIGHT = 2 X 200 = 399 lb

LUMBER

N. L. G. A. RULES

CHORDS	SIZE		LUMBER	DESCR.
A - D	2x6	DRY	No.2	SPF
D - H	2x6	DRY	No.2	SPF
H - K	2x6	DRY	No.2	SPF
K - N	2x6	DRY	No.2	SPF
AA- B	2x6	DRY	No.2	SPF
O - M	2x6	DRY	No.2	SPF
AA- V	2x6	DRY	No.2	SPF
V - T	2x6	DRY	No.2	SPF
T - O	2x6	DRY	No.2	SPF
ALL WEBS EXCEPT	2x3	DRY	No.2	SPF

DRY: SEASONED LUMBER.

DESIGN CONSISTS OF 2 TRUSSES BUILT SEPARATELY THEN FASTENED TOGETHER AS FOLLOWS:

CHORDS	#ROWS	SURFACE SPACING (IN)	LOAD(PLF)
TOP CHORDS : (0.122"X3") SPIRAL NAILS			
A- D	2	12	SIDE(122.0)
D- H	2	12	SIDE(183.1)
H- K	2	12	SIDE(61.0)
K- N	2	12	SIDE(122.0)
AA- B	2	12	TOP
O- M	2	12	TOP
BOTTOM CHORDS : (0.122"X3") SPIRAL NAILS			
AA- V	2	12	SIDE(183.1)
V- T	2	12	TOP
T- O	2	12	SIDE(183.1)
WEBS : (0.122"X3") SPIRAL NAILS			
2x3	1	6	
F- W	1	4	SIDE(558.9)
L- P	1	2	SIDE(698.6)
I- S	1	4	
C- Z	1	2	

NAILS TO BE DRIVEN FROM ONE SIDE ONLY.

GIRDER NAILING ASSUMES NAILED HANGERS ARE FASTENED WITH MIN. 3-9 INCH NAILS.

TOP - COMPONENTS ARE LOADED FROM THE TOP AND MUST BE PLACED ON TOP EDGE OF ALL PLIES FOR THE LOAD TO BE TRANSFERRED TO EACH PLY.

SIDE - PLF SHOWN IS THE EQUIVALENT UDL APPLIED TO ONE SIDE THAT THE CORRESPONDING NAILING PATTERN SHALL BE CAPABLE OF TRANSFERING. REMAINING PLF MUST BE APPLIED ON THE OPPOSITE SIDE OR ON THE TOP.

PLATES (table is in inches)

JT	TYPE	PLATES	W	LEN	Y	X
B	TMWW+p	MT20	6.0	9.0	4.00	3.00
C, F, I, L						
C	TMWW-t	MT20	5.0	6.0		
D	TTWW+m	MT20	6.0	9.0	3.50	1.50
E	TMWW+t	MT20	4.0	6.0	2.75	1.50
G	TMW+w	MT20	2.0	4.0	2.50	1.00
H	TS-t	MT20	5.0	6.0		
J	TMWW+t	MT20	4.0	6.0	2.75	1.50
K	TTWW+m	MT20	6.0	9.0	3.50	1.50
M	TMWW+p	MT20	6.0	9.0	4.00	3.00
O	BMV1+t	MT20	6.0	9.0	Edge	0.50
P	BMWW+t	MT20	5.0	8.0	4.25	1.75
Q	BMWW+t	MT20	3.0	6.0		

DIMENSIONS, SUPPORTS AND LOADINGS SPECIFIED BY FABRICATOR TO BE VERIFIED BY BUILDING DESIGNER

BEARINGS

JT	FACTORED GROSS REACTION VERT	HORZ	MAXIMUM FACTORED GROSS REACTION DOWN	HORZ	UPLIFT	INPUT BRG IN-SX	REQRD BRG IN-SX
AA	6965	0	6965	0	0	5-8	5-8
O	7529	0	7529	0	0	5-8	5-8

UNFACTORED REACTIONS

JT	1ST LCASE COMBINED	MAX /MIN. COMPONENT REACTIONS SNOW	LIVE	PERM.LIVE	WIND	DEAD	SOIL
AA	5364	3636 / 0	865 / 0	0 / 0	0 / 0	864 / 0	0 / 0
O	5776	3955 / 0	907 / 0	0 / 0	0 / 0	915 / 0	0 / 0

BEARING MATERIAL TO BE SPF NO.2 OR BETTER AT JOINT(S) AA, O

BRACING

TOP CHORD TO BE SHEATHED OR MAX. PURLIN SPACING = 3.63 FT.
MAX. UNBRACED BOTTOM CHORD LENGTH = 10.00 FT. OR RIGID CEILING DIRECTLY APPLIED.

ALL PITCH BREAKS AND PERIMETER CORNER JOINTS MUST BE LATERALLY RESTRAINED.

LOADING

TOTAL LOAD CASES: (4)

CHORDS

MEMB. FR-TO	MAX. FACTORED FORCE (LBS)	FACTORED VERT. LOAD (PLF) FROM	TO	LC1	MAX CSI (LC)	MAX. UNBRAC LENGTH
A- B	0 / 63	-122.2	-122.2	0.05 (1)	10.00	
B- C	-5399 / 0	-122.2	-122.2	0.08 (1)	4.99	
C- D	-6343 / 0	-122.2	-122.2	0.07 (1)	4.69	
D-AB	-8122 / 0	-122.2	-122.2	0.21 (1)	4.12	
AB- E	-8122 / 0	-122.2	-122.2	0.21 (1)	4.12	
E-AC	-10551 / 0	-122.2	-122.2	0.27 (1)	3.63	
AC- F	-10551 / 0	-122.2	-122.2	0.27 (1)	3.63	
F- G	-9824 / 0	-122.2	-122.2	0.29 (1)	3.73	
G- H	-9824 / 0	-122.2	-122.2	0.28 (1)	3.75	
H- I	-9824 / 0	-122.2	-122.2	0.28 (1)	3.75	
I- J	-8035 / 0	-122.2	-122.2	0.16 (1)	4.19	
J- K	-6251 / 0	-122.2	-122.2	0.14 (1)	4.67	
K- L	-5625 / 0	-122.2	-122.2	0.13 (1)	4.86	
L- M	-5783 / 0	-122.2	-122.2	0.13 (1)	4.80	
M- N	0 / 63	-122.2	-122.2	0.05 (1)	10.00	
AA- B	-6816 / 0	0.0	0.0	0.25 (1)	5.71	
O- M	-7293 / 0	0.0	0.0	0.27 (1)	5.55	
AA-AD	0 / 0	-28.0	-28.0	0.05 (1)	10.00	
AD- Z	0 / 0	-28.0	-28.0	0.05 (1)	10.00	
Z-AE	0 / 3767	-28.0	-28.0	0.33 (1)	10.00	
AE- Y	0 / 3767	-28.0	-28.0	0.33 (1)	10.00	
Y-AF	0 / 4412	-28.0	-28.0	0.37 (1)	10.00	
AF- X	0 / 4412	-28.0	-28.0	0.37 (1)	10.00	
X-AG	0 / 8122	-28.0	-28.0	0.67 (1)	10.00	
AG- W	0 / 8122	-28.0	-28.0	0.67 (1)	10.00	
W- V	0 / 10551	-28.0	-28.0	0.76 (1)	10.00	
V- U	0 / 10551	-28.0	-28.0	0.76 (1)	10.00	
U- T	0 / 8035	-28.0	-28.0	0.57 (1)	10.00	
T- S	0 / 8035	-28.0	-28.0	0.57 (1)	10.00	
S- R	0 / 6250	-28.0	-28.0	0.43 (1)	10.00	
R- Q	0 / 4007	-28.0	-28.0	0.32 (1)	10.00	
Q- P	0 / 3991	-28.0	-28.0	0.40 (1)	10.00	
P- O	0 / 0	-28.0	-28.0	0.14 (1)	10.00	

WEBS

MEMB. FR-TO	MAX. FACTORED FORCE (LBS)	MAX CSI (LC)
Y- D	-800 / 0	0.14 (1)
W- F	0 / 178	0.02 (3)
F- U	-955 / 0	0.46 (1)
U- G	-724 / 0	0.13 (1)
U- I	0 / 2349	0.29 (1)
S- I	-2077 / 0	0.36 (1)
Q- K	0 / 497	0.06 (1)
C- Y	0 / 1597	0.20 (1)
Q- L	0 / 11	0.00 (1)
P- L	0 / 58	0.01 (3)
P- M	0 / 4863	0.60 (1)
Z- C	-2322 / 0	0.24 (1)
B- Z	0 / 4609	0.57 (1)
E- W	0 / 3855	0.48 (1)
D- X	0 / 5757	0.71 (1)
X- E	-3488 / 0	0.61 (1)
R- K	0 / 3481	0.43 (1)
S- J	0 / 2811	0.35 (1)
R- J	0 / 3620	0.45 (1)

FACTORED CONCENTRATED LOADS (LBS)

JT	LOC.	LC1	MAX-	MAX+	FACE	DIR.	TYPE
D	3-2-12	-26	-29	---	FRONT	VERT	DOL
D	3-2-12	-65	-65	---	BACK	VERT	TOTAL
D	3-2-12	-404	-404	---	FRONT	VERT	DOL

LICENSED PROFESSIONAL ENGINEER
9/11/17
S. KATSOULAKOS
PROVINCE OF ONTARIO

DWG NO. TAM 45735-17

STRUCTURAL COMPONENT ONLY

[M]

DESIGN CRITERIA

*** SPECIAL LOADS ANALYSIS ***
GEOMETRY AND/OR BASIC LOADS CHANGED BY USER.
LOADS WERE DERIVED FROM USER INPUT
NO FURTHER MODIFICATIONS WERE MADE

SPECIFIED LOADS:

TOP CH.	LL	=	38.3	PSF
	DL	=	3.0	PSF
BOT CH.	LL	=	10.5	PSF
	DL	=	7.0	PSF
TOTAL LOAD		=	58.7	PSF

SPACING = 24.0 IN. C/C

LOADING IN FLAT SECTION BASED ON A SLOPE OF 6.00/12

*** NON STANDARD GIRDER ***
ADDT'L USER-DEFINED LOADS APPLIED TO ALL LOAD CASES.

THIS TRUSS IS DESIGNED FOR RESIDENTIAL OR SMALL BUILDING REQUIREMENTS OF PART 9, NBCC 2010

THIS DESIGN COMPLIES WITH:
- PART 9 OF OBC 2012 , BCBC 2012 , ABC 2014
- CSA 086-09
- TPIC 2011

DESIGN ASSUMPTIONS
-OVERHANG NOT TO BE ALTERED OR CUT OFF.

(55 % OF 54.4 P.S.F. G.S.L. PLUS 8.4 P.S.F. RAIN LOAD) EQUALS 38.3 P.S.F. SPECIFIED ROOF LIVE LOAD

ALLOWABLE DEFL.(LL)= L/360 (1.09")
CALCULATED VERT. DEFL.(LL) = L/ 999 (0.23")
ALLOWABLE DEFL.(TL)= L/360 (1.09")
CALCULATED VERT. DEFL.(TL) = L/ 999 (0.35")

CSI: TC=0.29 (F-G:1) , BC=0.76 (U-W:1) , WB=0.71 (D-X:1) , SSI=0.13 (P-Q:1)

DOL LUMBER=1.00 NAIL=1.00 LS BEND=1.00 COMP=1.00 SHEAR=1.00 TENS= 1.00

COMPANION LIVE LOAD FACTOR = 0.50

AUTOSOLVE HEELS OFF

TRUSS PLATE MANUFACTURER IS NOT RESPONSIBLE FOR QUALITY CONTROL IN THE TRUSS MANUFACTURING PLANT .

NAIL VALUES

PLATE	GRIP(DRY) (PSI) MAX	MIN	SHEAR (PLI) MAX	MIN	SECTION (PLI) MAX	MIN
MT20	618	354	1667	822	2284	1656

PLATE PLACEMENT TOL. = 0.250 Inches

PLATE ROTATION TOL. = 5.0 Deg.

p6/6

CONTINUED ON PAGE 2

JOB NAME	TRUSS NAME	QUANTITY	PLY	JOB DESC. 42067	DRWG NO.
272820	T1Z	1	2	TRUSS DESC.	

PLATES (table is in inches)

JT	TYPE	PLATES	W	LEN	Y	X
R	BMWW+t	MT20	5.0	8.0	4.00	1.75
S	BMWW+t	MT20	4.0	9.0	4.50	1.50
T	BS-t	MT20	5.0	6.0		
U	BMWWW-t	MT20	5.0	8.0		
V	BS-t	MT20	5.0	6.0		
W	BMWW+t	MT20	4.0	9.0	4.50	1.50
X	BMWW+t	MT20	5.0	8.0	4.00	1.75
Y	BMWW+t	MT20	3.0	6.0		
Z	BMWW+t	MT20	5.0	8.0	4.25	1.75
AA	BMV1+t	MT20	6.0	9.0	5.50	

Edge - INDICATES REFERENCE CORNER OF PLATE TOUCHES EDGE OF CHORD.

HANGERS NOTES

1) SPECIAL HANGER(S) OR CONNECTION(S) REQUIRED TO SUPPORT CONCENTRATED LOAD(S) 429.8 lbs FACTORED DOWN AT 29-5-4, 429.8 lbs FACTORED DOWN AT 3-2-12, 64.7 lbs FACTORED DOWN AT 3-2-12, 62.0 lbs FACTORED DOWN AT 4-11-4, AND 62.0 lbs FACTORED DOWN AT 6-11-4, AND 62.0 lbs FACTORED DOWN AT 8-11-4 ON TOP CHORD, AND 380.1 lbs FACTORED DOWN AT 11-4, 379.2 lbs FACTORED DOWN AT 2-11-4, 379.2 lbs FACTORED DOWN AT 4-11-4, 379.2 lbs FACTORED DOWN AT 6-11-4, 379.2 lbs FACTORED DOWN AT 8-11-4, AND 2844.4 lbs FACTORED DOWN AT 10-10-8, AND 3379.9 lbs FACTORED DOWN AT 30-9-8 ON BOTTOM CHORD. DESIGN FOR UNSPECIFIED CONNECTION(S) IS DELEGATED TO THE BUILDING DESIGNER.

FACTORED CONCENTRATED LOADS (LBS)

JT	LOC.	LC1	MAX-	MAX+	FACE	DIR.	TYPE
E	6-11-4	-62	-62	---	BACK	VERT	TOTAL
K	29-5-4	-26	-29	---	FRONT	VERT	DEAD
K	29-5-4	-404	-404	---	FRONT	VERT	SNOW
P	30-9-8	-3380	-3380	---	BACK	VERT	TOTAL
W	10-10-8	-2844	-2844	---	BACK	VERT	TOTAL
X	6-11-4	-379	-379	---	BACK	VERT	TOTAL
AB	4-11-4	-62	-62	---	BACK	VERT	TOTAL
AC	8-11-4	-62	-62	---	BACK	VERT	TOTAL
AD	11-4	-380	-380	---	BACK	VERT	TOTAL
AE	2-11-4	-379	-379	---	BACK	VERT	TOTAL
AF	4-11-4	-379	-379	---	BACK	VERT	TOTAL
AG	8-11-4	-379	-379	---	BACK	VERT	TOTAL

JSI GRIP= 0.89 (L) (INPUT = 0.90)
JSI METAL= 0.86 (T) (INPUT = 1.00)

LICENSED PROFESSIONAL ENGINEER
9147
S. KATSOULAKOS
PROVINCE OF ONTARIO

DWG NO. TAM 45735-17
STRUCTURAL
COMPONENT ONLY

JOB NAME	TRUSS NAME	QUANTITY	PLY	JOB DESC. 42067	DRWG NO.
272820	T2	2	1	TRUSS DESC.	

Tamarack Roof Truss, Burlington

Version 8.030 S Oct 5 2016 MiTek Industries, Inc. Mon Sep 11 07:41:52 2017 Page 1

ID:ICtWqkzHJcrjayyEloEouzy77mm-ABZisD_eCmzdkwn0gVST0dVKNSxmWm3jvvHrqoyenVz

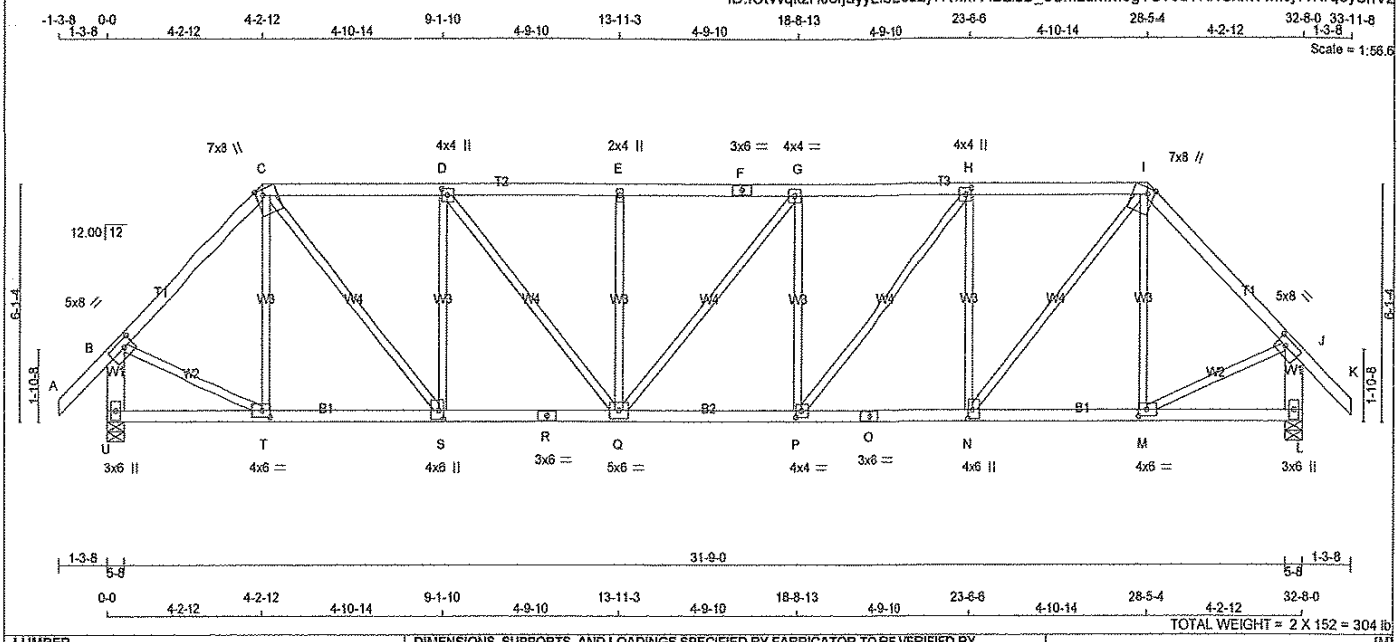

TOTAL WEIGHT = 2 X 152 = 304 lb

[M]

LUMBER

N. L. G. A. RULES

CHORDS	SIZE		LUMBER	DESCR.
A - C	2x4	DRY	No.2	SPF
C - F	2x4	DRY	No.2	SPF
F - I	2x4	DRY	No.2	SPF
I - K	2x4	DRY	No.2	SPF
U - B	2x6	DRY	No.2	SPF
L - J	2x6	DRY	No.2	SPF
U - R	2x4	DRY	No.2	SPF
R - O	2x4	DRY	No.2	SPF
O - L	2x4	DRY	No.2	SPF
ALL WEBS EXCEPT	2x3	DRY	No.2	SPF

DRY: SEASONED LUMBER.

PLATES (table is in inches)

JT	TYPE	PLATES	W	LEN	Y	X
B	TMW-t	MT20	5.0	8.0	2.25	3.00
C	TTWW+m	MT20	7.0	8.0	Edge	2.25
D	TMWW+t	MT20	4.0	4.0	2.00	1.75
E	TMW+w	MT20	2.0	4.0		
F	TS-t	MT20	3.0	6.0		
G	TMWW-t	MT20	4.0	4.0		
H	TMWW+t	MT20	4.0	4.0	2.00	1.75
I	TTWW+m	MT20	7.0	8.0	Edge	2.25
J	TMW-t	MT20	5.0	8.0	2.25	3.00
L	BMV1+p	MT20	3.0	6.0		
M	BMWW-t	MT20	4.0	6.0	2.00	2.75
N	BMWW+t	MT20	4.0	6.0	2.75	1.50
O	BS-t	MT20	3.0	6.0		
P	BMWW-t	MT20	4.0	4.0	2.00	1.75
Q	BMWWW-t	MT20	5.0	6.0		
R	BS-t	MT20	3.0	6.0		
S	BMWW+t	MT20	4.0	6.0	2.75	1.50
T	BMWW-t	MT20	4.0	6.0	2.00	2.75
U	BMV1+p	MT20	3.0	6.0		

Edge - INDICATES REFERENCE CORNER OF PLATE TOUCHES EDGE OF CHORD.

DIMENSIONS, SUPPORTS AND LOADINGS SPECIFIED BY FABRICATOR TO BE VERIFIED BY BUILDING DESIGNER

BEARINGS

JT	FACTORED GROSS REACTION VERT	HORZ	MAXIMUM FACTORED GROSS REACTION DOWN	HORZ	UPLIFT	INPUT BRG IN-SX	REQRD BRG IN-SX
U	2624	0	2624	0	0	5-8	5-8
L	2624	0	2624	0	0	5-8	5-8

UNFACTORED REACTIONS

JT	1ST LCASE COMBINED	MAX./MIN. COMPONENT REACTIONS SNOW	LIVE	PERM.LIVE	WIND	DEAD	SOIL
U	2034	1356 / 0	343 / 0	0 / 0	0 / 0	335 / 0	0 / 0
L	2034	1356 / 0	343 / 0	0 / 0	0 / 0	335 / 0	0 / 0

BEARING MATERIAL TO BE SPF NO.2 OR BETTER AT JOINT(S) U, L

BRACING

TOP CHORD TO BE SHEATHED OR MAX. PURLIN SPACING = 3.20 FT.
MAX. UNBRACED BOTTOM CHORD LENGTH = 10.00 FT. OR RIGID CEILING DIRECTLY APPLIED.

ALL PITCH BREAKS AND PERIMETER CORNER JOINTS MUST BE LATERALLY RESTRAINED.

LOADING

TOTAL LOAD CASES: (4)

CHORDS

MEMB. FR-TO	MAX. FORCE (LBS)	FACTORED VERT. LOAD (PLF) FROM	TO	LC1 MAX CSI (LC)	MAX. UNBRAC LENGTH
A- B	0 / 60	-122.2	-122.2	0.17 (1)	10.00
B- C	-2245 / 0	-122.2	-122.2	0.52 (1)	4.03
C- D	-2834 / 0	-122.2	-122.2	0.58 (1)	3.55
D- E	-3414 / 0	-122.2	-122.2	0.64 (1)	3.20
E- F	-3414 / 0	-122.2	-122.2	0.51 (1)	3.38
F- G	-3414 / 0	-122.2	-122.2	0.51 (1)	3.38
G- H	-3416 / 0	-122.2	-122.2	0.64 (1)	3.20
H- I	-2834 / 0	-122.2	-122.2	0.57 (1)	3.56
I- J	-2245 / 0	-122.2	-122.2	0.52 (1)	4.03
J- K	0 / 60	-122.2	-122.2	0.17 (1)	10.00
U- B	-2578 / 0	0.0	0.0	0.19 (1)	6.47
L- J	-2578 / 0	0.0	0.0	0.19 (1)	6.47
U- T	0 / 0	-28.0	-28.0	0.14 (2)	10.00
T- S	0 / 1574	-28.0	-28.0	0.34 (1)	10.00
S- R	0 / 2835	-28.0	-28.0	0.51 (1)	10.00
R- Q	0 / 2835	-28.0	-28.0	0.51 (1)	10.00
Q- P	0 / 3416	-28.0	-28.0	0.61 (1)	10.00
P- O	0 / 2834	-28.0	-28.0	0.51 (1)	10.00
O- N	0 / 2834	-28.0	-28.0	0.51 (1)	10.00
N- M	0 / 1574	-28.0	-28.0	0.34 (1)	10.00
M- L	0 / 0	-28.0	-28.0	0.14 (2)	10.00

WEBS

MEMB. FR-TO	MAX. FACTORED FORCE (LBS)	MAX CSI (LC)
T- C	-410 / 38	0.24 (1)
M- I	-409 / 38	0.24 (1)
B- T	0 / 1676	0.38 (1)
M- J	0 / 1676	0.38 (1)
N- I	0 / 1948	0.44 (1)
C- S	0 / 1949	0.44 (1)
N- H	-1355 / 0	0.79 (1)
S- D	-1354 / 0	0.79 (1)
P- H	0 / 914	0.21 (1)
D- Q	0 / 910	0.20 (1)
P- G	-569 / 0	0.33 (1)
Q- E	-568 / 0	0.33 (1)
Q- G	-3 / 0	0.00 (1)

LICENSED PROFESSIONAL ENGINEER
9/11/17
S. KATSOULAKOS
PROVINCE OF ONTARIO

DWG NO. TAM45736-17
STRUCTURAL
COMPONENT ONLY

DESIGN CRITERIA

SPECIFIED LOADS:

TOP CH.	LL	=	38.3	PSF
	DL	=	3.0	PSF
BOT CH.	LL	=	10.5	PSF
	DL	=	7.0	PSF
TOTAL LOAD		=	58.7	PSF

SPACING = 24.0 IN. C/C

LOADING IN FLAT SECTION BASED ON A SLOPE OF 6.00/12

THIS TRUSS IS DESIGNED FOR RESIDENTIAL OR SMALL BUILDING REQUIREMENTS OF PART 9, NBCC 2010

THIS DESIGN COMPLIES WITH:
- PART 9 OF OBC 2012 , BCBC 2012 , ABC 2014
- CSA 086-09
- TPIC 2011

(55 % OF 54.4 P.S.F. G.S.L. PLUS 8.4 P.S.F. RAIN LOAD) EQUALS 38.3 P.S.F. SPECIFIED ROOF LIVE LOAD

ALLOWABLE DEFL.(LL)= L/360 (1.09")
CALCULATED VERT. DEFL.(LL) = L/ 999 (0.21")
ALLOWABLE DEFL.(TL)= L/360 (1.09")
CALCULATED VERT. DEFL.(TL) = L/ 999 (0.32")

CSI: TC=0.64 (D-E:1) , BC=0.61 (P-Q:1) , WB=0.79 (H-N:1) , SSI=0.28 (C-D:1)

DOL LUMBER=1.00 NAIL=1.00 LS BEND=1.10 COMP=1.10 SHEAR=1.10 TENS= 1.10

COMPANION LIVE LOAD FACTOR = 0.50

AUTOSOLVE HEELS OFF

TRUSS PLATE MANUFACTURER IS NOT RESPONSIBLE FOR QUALITY CONTROL IN THE TRUSS MANUFACTURING PLANT .

NAIL VALUES

PLATE	GRIP(DRY) (PSI) MAX	MIN	SHEAR (PLI) MAX	MIN	SECTION (PLI) MAX	MIN
MT20	618	354	1667	822	2284	1656

PLATE PLACEMENT TOL. = 0.250 inches

PLATE ROTATION TOL. = 5.0 Deg.

USI GRIP= 0.89 (J) (INPUT = 0.90)
USI METAL= 0.79 (R) (INPUT = 1.00)

JOB NAME	TRUSS NAME	QUANTITY	PLY	JOB DESC. 42067	DRWG NO.
272820	T3	6	1	TRUSS DESC.	

Tamarack Roof Truss, Burlington

Version 8.030 S Oct 5 2016 MiTek Industries, Inc. Mon Sep 11 07:41:53 2017 Page 1

ID:ICtWqkzHJcrjayyEloEouzy77mm-eN754Z?Gz45TM3LCDCziZr2ShrlUFA3t8Z0PNEyenVy

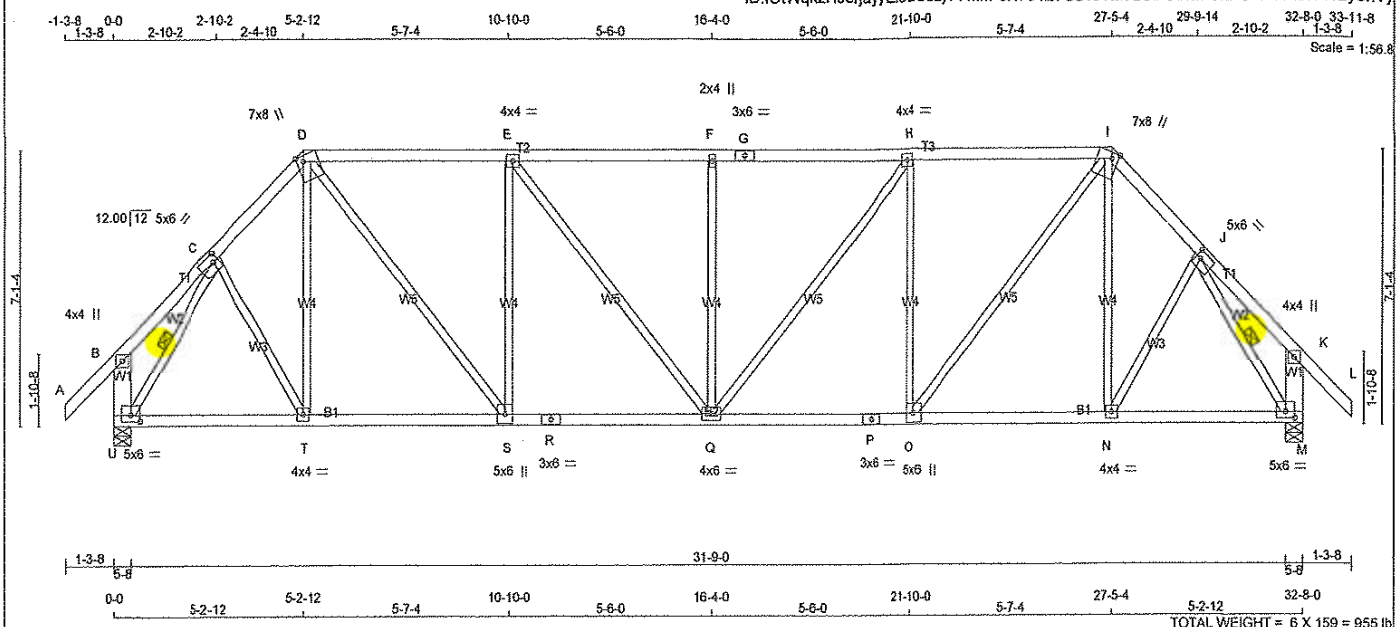

LUMBER

N. L. G. A. RULES

CHORDS	SIZE		LUMBER	DESCR.
A - D	2x4	DRY	No.2	SPF
D - G	2x4	DRY	No.2	SPF
G - I	2x4	DRY	No.2	SPF
I - L	2x4	DRY	No.2	SPF
U - B	2x6	DRY	No.2	SPF
M - K	2x6	DRY	No.2	SPF
U - R	2x4	DRY	No.2	SPF
R - P	2x4	DRY	No.2	SPF
P - M	2x4	DRY	No.2	SPF
ALL WEBS EXCEPT	2x3	DRY	No.2	SPF

DRY: SEASONED LUMBER.

PLATES (table is in inches)

JT	TYPE	PLATES	W	LEN	Y	X
B	TMV+p	MT20	4.0	4.0		
C	TMWW-t	MT20	5.0	6.0	2.25	1.50
D	TTWW+m	MT20	7.0	8.0	Edge	2.25
E	TMWW-t	MT20	4.0	4.0		
F	TMW+w	MT20	2.0	4.0		
G	TS-t	MT20	3.0	6.0		
H	TMWW-t	MT20	4.0	4.0		
I	TTWW+m	MT20	7.0	8.0	Edge	2.25
J	TMWW-t	MT20	5.0	6.0	2.25	1.50
K	TMV+p	MT20	4.0	4.0		
M	BMVW1-t	MT20	5.0	6.0	2.00	3.00
N	BMWW-t	MT20	4.0	4.0		
O	BMWW+t	MT20	5.0	6.0		
P	BS-t	MT20	3.0	6.0		
Q	BMWWW-t	MT20	4.0	6.0		
R	BS-t	MT20	3.0	6.0		
S	BMWW+t	MT20	5.0	6.0		
T	BMWW-t	MT20	4.0	4.0		
U	BMVW1-t	MT20	5.0	6.0	2.00	3.00

Edge - INDICATES REFERENCE CORNER OF PLATE TOUCHES EDGE OF CHORD.

DIMENSIONS, SUPPORTS AND LOADINGS SPECIFIED BY FABRICATOR TO BE VERIFIED BY BUILDING DESIGNER

BEARINGS

JT	FACTORED GROSS REACTION VERT	HORZ	MAXIMUM FACTORED GROSS REACTION DOWN	HORZ	UPLIFT	INPUT BRG IN-SX	REQRD BRG IN-SX
M	2624	0	2624	0	0	5-8	5-8
U	2624	0	2624	0	0	5-8	5-8

UNFACTORED REACTIONS

JT	1ST LCASE COMBINED	MAX./MIN. COMPONENT REACTIONS SNOW	LIVE	PERM.LIVE	WIND	DEAD	SOIL
M	2034	1356 / 0	343 / 0	0 / 0	0 / 0	335 / 0	0 / 0
U	2034	1356 / 0	343 / 0	0 / 0	0 / 0	335 / 0	0 / 0

BEARING MATERIAL TO BE SPF NO.2 OR BETTER AT JOINT(S) M, U

BRACING

TOP CHORD TO BE SHEATHED OR MAX. PURLIN SPACING = 3.17 FT.
MAX. UNBRACED BOTTOM CHORD LENGTH = 10.00 FT. OR RIGID CEILING DIRECTLY APPLIED.

ALL PITCH BREAKS AND PERIMETER CORNER JOINTS MUST BE LATERALLY RESTRAINED.

1 LATERAL BRACE(S) AT 1/ 2 LENGTH OF C-U, J-M.

END VERTICAL(S) MUST BE SHEATHED OR HAVE BRACES AS INDICATED IN THE MAX. UNBRACED LENGTH COLUMN OF THE TABLE BELOW

LOADING

TOTAL LOAD CASES: (4)

CHORDS

MEMB. FR-TO	MAX. FORCE (LBS)	FACTORED VERT. LOAD (PLF) FROM	TO	LC1 CSI (LC)	MAX UNBRAC LENGTH
A- B	0 / 60	-122.2	-122.2	0.17 (1)	10.00
B- C	-2 / 19	-122.2	-122.2	0.11 (1)	10.00
C- D	-2302 / 0	-122.2	-122.2	0.17 (1)	4.38
D- E	-2674 / 0	-122.2	-122.2	0.76 (1)	3.38
E- F	-2985 / 0	-122.2	-122.2	0.80 (1)	3.17
F- G	-2985 / 0	-122.2	-122.2	0.80 (1)	3.17
G- H	-2985 / 0	-122.2	-122.2	0.80 (1)	3.17
H- I	-2674 / 0	-122.2	-122.2	0.76 (1)	3.38
I- J	-2302 / 0	-122.2	-122.2	0.17 (1)	4.38
J- K	-2 / 19	-122.2	-122.2	0.11 (1)	10.00
K- L	0 / 60	-122.2	-122.2	0.17 (1)	10.00
U- B	-308 / 0	0.0	0.0	0.02 (1)	7.81
M- K	-308 / 0	0.0	0.0	0.02 (1)	7.81
U- T	0 / 1441	-28.0	-28.0	0.34 (1)	10.00
T- S	0 / 1602	-28.0	-28.0	0.37 (1)	10.00
S- R	0 / 2674	-28.0	-28.0	0.51 (1)	10.00
R- Q	0 / 2674	-28.0	-28.0	0.51 (1)	10.00
Q- P	0 / 2674	-28.0	-28.0	0.51 (1)	10.00
P- O	0 / 2674	-28.0	-28.0	0.51 (1)	10.00
O- N	0 / 1602	-28.0	-28.0	0.37 (1)	10.00
N- M	0 / 1441	-28.0	-28.0	0.34 (1)	10.00

WEBS

MEMB. FR-TO	MAX. FORCE (LBS)	MAX CSI (LC)
T- D	-88 / 134	0.08 (1)
D- S	0 / 1683	0.38 (1)
S- E	-1146 / 0	1.00 (1)
E- Q	0 / 495	0.11 (1)
Q- F	-619 / 0	0.54 (1)
Q- H	0 / 495	0.11 (1)
O- H	-1146 / 0	1.00 (1)
O- I	0 / 1683	0.38 (1)
N- I	-88 / 134	0.08 (1)
C- T	0 / 305	0.07 (1)
N- J	0 / 305	0.07 (1)
U- C	-2678 / 0	0.54 (1)
J- M	-2678 / 0	0.54 (1)

LICENSED PROFESSIONAL ENGINEER
9112
S. KATSOULAKOS
PROVINCE OF ONTARIO

DWG NO. TM-75737-17
STRUCTURAL
COMPONENT ONLY

[M]

DESIGN CRITERIA

SPECIFIED LOADS:

TOP CH.	LL	=	38.3	PSF
	DL	=	3.0	PSF
BOT CH.	LL	=	10.5	PSF
	DL	=	7.0	PSF
TOTAL LOAD		=	58.7	PSF

SPACING = 24.0 IN. C/C

LOADING IN FLAT SECTION BASED ON A SLOPE OF 6.00/12

THIS TRUSS IS DESIGNED FOR RESIDENTIAL OR SMALL BUILDING REQUIREMENTS OF PART 9, NBCC 2010

THIS DESIGN COMPLIES WITH:
- PART 9 OF OBC 2012 , BCBC 2012 , ABC 2014
- CSA 086-09
- TPIC 2011

(55 % OF 54.4 P.S.F. G.S.L. PLUS 8.4 P.S.F. RAIN LOAD) EQUALS 38.3 P.S.F. SPECIFIED ROOF LIVE LOAD

ALLOWABLE DEFL.(LL)= L/360 (1.09")
CALCULATED VERT. DEFL.(LL) = L/ 999 (0.17")
ALLOWABLE DEFL.(TL)= L/360 (1.09")
CALCULATED VERT. DEFL.(TL) = L/ 999 (0.26")

CSI: TC=0.80 (E-F:1) , BC=0.51 (Q-S:1) , WB=1.00 (H-O:1) , SSI=0.32 (H-I:1)

DOL LUMBER=1.00 NAIL=1.00 LS BEND=1.10 COMP=1.10 SHEAR=1.10 TENS= 1.10

COMPANION LIVE LOAD FACTOR = 0.50

AUTOSOLVE HEELS OFF

TRUSS PLATE MANUFACTURER IS NOT RESPONSIBLE FOR QUALITY CONTROL IN THE TRUSS MANUFACTURING PLANT .

NAIL VALUES

PLATE	GRIP(DRY) (PSI) MAX	MIN	SHEAR (PLI) MAX	MIN	SECTION (PLI) MAX	MIN
MT20	618	354	1667	822	2284	1656

PLATE PLACEMENT TOL. = 0.250 inches

PLATE ROTATION TOL. = 5.0 Deg.

JSI GRIP= 0.88 (J) (INPUT = 0.90)
JSI METAL= 0.68 (R) (INPUT = 1.00)

JOB NAME	TRUSS NAME	QUANTITY	PLY	JOB DESC. 42067	DRWG NO.
272820	T3C	3	1	TRUSS DESC.	

Tamarack Roof Truss, Burlington

Version 8.030 S Oct 5 2016 MiTek Industries, Inc. Mon Sep 11 07:41:53 2017 Page 1

ID:ICtWqkzHJcrjayyEloEouzy77mm-eN754Z?Gz45TM3LCDCziZr2StrJdFAZt8Z0PNEyenVy

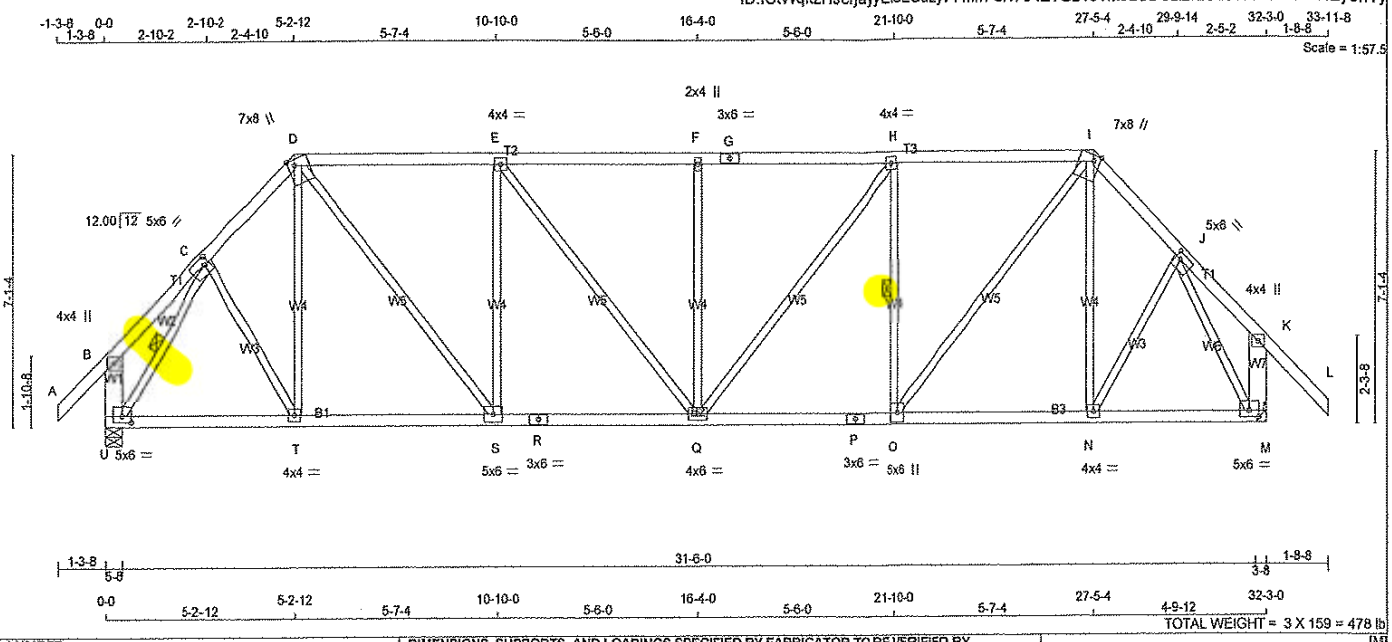

TOTAL WEIGHT = 3 X 159 = 478 lb

LUMBER

N. L. G. A. RULES

CHORDS	SIZE		LUMBER	DESCR.
A - D	2x4	DRY	No.2	SPF
D - G	2x4	DRY	No.2	SPF
G - I	2x4	DRY	No.2	SPF
I - L	2x4	DRY	No.2	SPF
U - B	2x6	DRY	No.2	SPF
M - K	2x6	DRY	No.2	SPF
U - R	2x4	DRY	No.2	SPF
R - P	2x4	DRY	No.2	SPF
P - M	2x4	DRY	No.2	SPF
ALL WEBS EXCEPT	2x3	DRY	No.2	SPF

DRY: SEASONED LUMBER.

PLATES (table is in inches)

JT	TYPE	PLATES	W	LEN	Y	X
B	TMV+p	MT20	4.0	4.0		
C	TMWW-t	MT20	5.0	6.0	2.25	1.50
D	TTWW+m	MT20	7.0	8.0	Edge	2.25
E	TMWW-t	MT20	4.0	4.0		
F	TMW+w	MT20	2.0	4.0		
G	TS-t	MT20	3.0	6.0		
H	TMWW-t	MT20	4.0	4.0		
I	TTWW+m	MT20	7.0	8.0	Edge	2.25
J	TMWW-t	MT20	5.0	6.0	2.00	1.75
K	TMV+p	MT20	4.0	4.0		
M	BMVW1-t	MT20	5.0	6.0	2.00	3.00
N	BMWW-t	MT20	4.0	4.0		
O	BMWW+t	MT20	5.0	6.0		
P	BS-t	MT20	3.0	6.0		
Q	BMWWW-t	MT20	4.0	6.0		
R	BS-t	MT20	3.0	6.0		
S	BMWW-t	MT20	5.0	6.0		
T	BMWW-t	MT20	4.0	4.0		
U	BMVW1-t	MT20	5.0	6.0	2.00	3.00

Edge - INDICATES REFERENCE CORNER OF PLATE TOUCHES EDGE OF CHORD.

DIMENSIONS, SUPPORTS AND LOADINGS SPECIFIED BY FABRICATOR TO BE VERIFIED BY BUILDING DESIGNER

BEARINGS

JT	FACTORED GROSS REACTION VERT	HORZ	MAXIMUM FACTORED GROSS REACTION DOWN	HORZ	UPLIFT	INPUT BRG IN-SX	REQRD BRG IN-SX
M	2650	0	2650	0	0	HANGER BY OTHERS MIN. SEAT SIZE: 3-8	
U	2586	0	2586	0	0	5-8	5-8

UNFACTORED REACTIONS

JT	1ST LCASE COMBINED	MAX./MIN. COMPONENT REACTIONS SNOW	LIVE	PERM.LIVE	WIND	DEAD	SOIL
M	2048	1376 / 0	339 / 0	0 / 0	0 / 0	334 / 0	0 / 0
U	2005	1336 / 0	339 / 0	0 / 0	0 / 0	331 / 0	0 / 0

BEARING MATERIAL TO BE SPF NO.2 OR BETTER AT JOINT(S) U

BRACING

TOP CHORD TO BE SHEATHED OR MAX. PURLIN SPACING = 3.22 FT.
MAX. UNBRACED BOTTOM CHORD LENGTH = 10.00 FT. OR RIGID CEILING DIRECTLY APPLIED.

ALL PITCH BREAKS AND PERIMETER CORNER JOINTS MUST BE LATERALLY RESTRAINED.

1 LATERAL BRACE(S) AT 1/ 2 LENGTH OF H-O, C-U.

END VERTICAL(S) MUST BE SHEATHED OR HAVE BRACES AS INDICATED IN THE MAX. UNBRACED LENGTH COLUMN OF THE TABLE BELOW

LOADING

TOTAL LOAD CASES: (4)

CHORDS

MEMB. FR-TO	MAX. FACTORED FORCE (LBS)	FACTORED VERT. LOAD (PLF) FROM	TO	LC1 MAX CSI (LC)	MAX UNBRAC LENGTH
A- B	0 / 60	-122.2	-122.2	0.17 (1)	10.00
B- C	-2 / 19	-122.2	-122.2	0.11 (1)	10.00
C- D	-2260 / 0	-122.2	-122.2	0.16 (1)	4.41
D- E	-2614 / 0	-122.2	-122.2	0.75 (1)	3.42
E- F	-2895 / 0	-122.2	-122.2	0.78 (1)	3.22
F- G	-2895 / 0	-122.2	-122.2	0.78 (1)	3.22
G- H	-2895 / 0	-122.2	-122.2	0.78 (1)	3.22
H- I	-2554 / 0	-122.2	-122.2	0.74 (1)	3.47
I- J	-2073 / 0	-122.2	-122.2	0.18 (1)	4.55
J- K	-57 / 0	-122.2	-122.2	0.27 (1)	6.25
K- L	0 / 78	-122.2	-122.2	0.29 (1)	10.00
U- B	-307 / 0	0.0	0.0	0.02 (1)	7.81
M- K	-441 / 0	0.0	0.0	0.04 (1)	7.81
U- T	0 / 1417	-28.0	-28.0	0.34 (2)	10.00
T- S	0 / 1573	-28.0	-28.0	0.36 (1)	10.00
S- R	0 / 2615	-28.0	-28.0	0.50 (1)	10.00
R- Q	0 / 2615	-28.0	-28.0	0.50 (1)	10.00
Q- P	0 / 2554	-28.0	-28.0	0.49 (1)	10.00
P- O	0 / 2554	-28.0	-28.0	0.49 (1)	10.00
O- N	0 / 1450	-28.0	-28.0	0.34 (1)	10.00
N- M	0 / 1162	-28.0	-28.0	0.30 (2)	10.00

WEBS

MEMB. FR-TO	MAX. FACTORED FORCE (LBS)	MAX CSI (LC)
T- D	-80 / 136	0.07 (1)
D- S	0 / 1635	0.37 (1)
S- E	-1109 / 0	0.97 (1)
E- Q	0 / 446	0.10 (1)
Q- F	-619 / 0	0.54 (1)
Q- H	0 / 543	0.12 (1)
O- H	-1184 / 0	0.38 (1)
O- I	0 / 1734	0.39 (1)
N- I	-300 / 66	0.26 (1)
C- T	0 / 296	0.07 (1)
N- J	0 / 549	0.12 (1)
U- C	-2633 / 0	0.53 (1)
J- M	-2449 / 0	0.88 (1)

LICENSED PROFESSIONAL ENGINEER
9/11/17
S. KATSOULAKOS
PROVINCE OF ONTARIO

DWG NO. TAM-95733-17

STRUCTURAL COMPONENT ONLY

[M]

DESIGN CRITERIA

SPECIFIED LOADS:

TOP CH.	LL	=	38.3	PSF
	DL	=	3.0	PSF
BOT CH.	LL	=	10.5	PSF
	DL	=	7.0	PSF
TOTAL LOAD		=	58.7	PSF

SPACING = 24.0 IN. C/C

LOADING IN FLAT SECTION BASED ON A SLOPE OF 6.00/12

THIS TRUSS IS DESIGNED FOR RESIDENTIAL OR SMALL BUILDING REQUIREMENTS OF PART 9, NBCC 2010

THIS DESIGN COMPLIES WITH:
- PART 9 OF OBC 2012 , BCBC 2012 , ABC 2014
- CSA 086-09
- TPIC 2011

DESIGN ASSUMPTIONS
-OVERHANG NOT TO BE ALTERED OR CUT OFF.

(55 % OF 54.4 P.S.F. G.S.L. PLUS 8.4 P.S.F. RAIN LOAD) EQUALS 38.3 P.S.F. SPECIFIED ROOF LIVE LOAD

ALLOWABLE DEFL.(LL)= L/360 (1.08")
CALCULATED VERT. DEFL.(LL) = L/ 999 (0.16")
ALLOWABLE DEFL.(TL)= L/360 (1.08")
CALCULATED VERT. DEFL.(TL) = L/ 999 (0.25")

CSI: TC=0.78 (E-F:1) , BC=0.50 (Q-S:1) , WB=0.97 (E-S:1) , SSI=0.32 (O-E:1)

DOL LUMBER=1.00 NAIL=1.00 LS BEND=1.10 COMP=1.10 SHEAR=1.10 TENS= 1.10

COMPANION LIVE LOAD FACTOR = 0.50

AUTOSOLVE HEELS OFF

TRUSS PLATE MANUFACTURER IS NOT RESPONSIBLE FOR QUALITY CONTROL IN THE TRUSS MANUFACTURING PLANT .

NAIL VALUES

PLATE	GRIP(DRY) (PSI) MAX	MIN	SHEAR (PLI) MAX	MIN	SECTION (PLI) MAX	MIN
MT20	618	354	1667	822	2284	1656

PLATE PLACEMENT TOL. = 0.250 inches

PLATE ROTATION TOL. = 5.0 Deg.

JSI GRIP= 0.90 (S) (INPUT = 0.90)
JSI METAL= 0.67 (R) (INPUT = 1.00)

JOB NAME	TRUSS NAME	QUANTITY	PLY	JOB DESC. 42067	DRWG NO.
272820	T4	2	1	TRUSS DESC.	

Tamarack Roof Truss, Burlington

Version 8.030 S Oct 5 2016 MiTek Industries, Inc. Mon Sep 11 07:41:53 2017 Page 1

ID:ICtWqkzHJcrjayyEloEouzy77mm-eN754Z?Gz45TM3LCDCziZr2VfrKbFEbt8Z0PNEyenVy

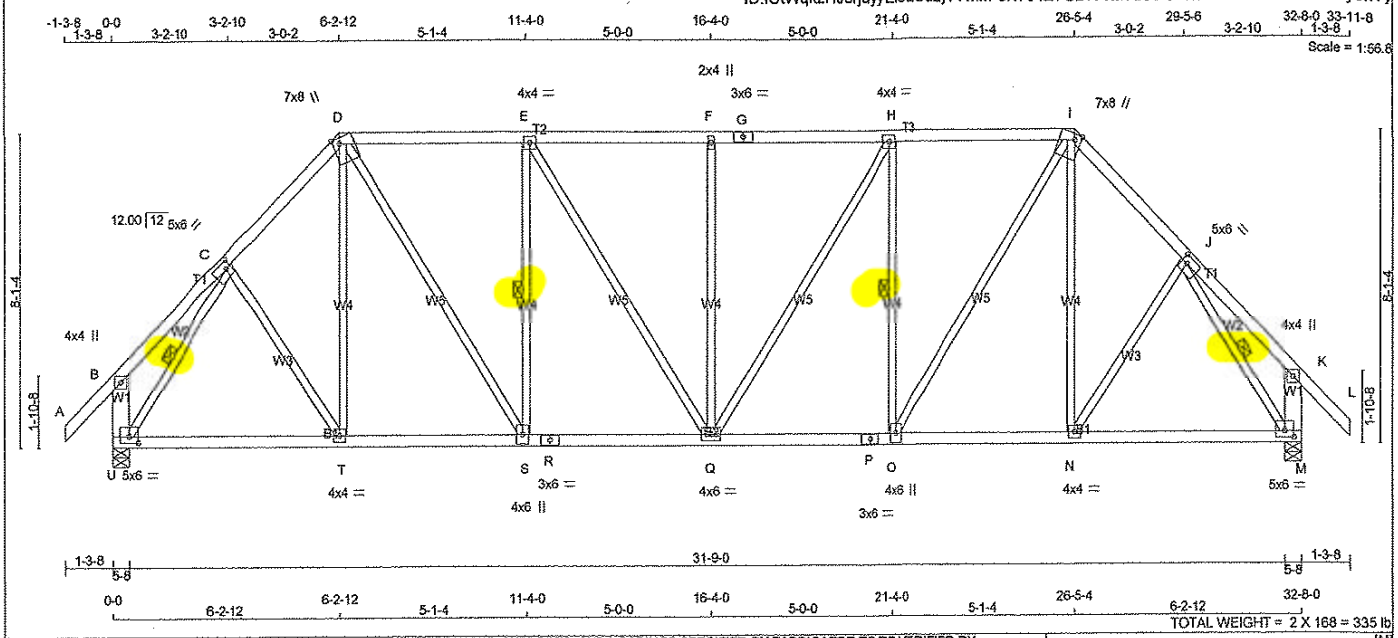

TOTAL WEIGHT = 2 X 168 = 335 lb

LUMBER

N. L. G. A. RULES

CHORDS	SIZE		LUMBER	DESCR.
A - D	2x4	DRY	No.2	SPF
D - G	2x4	DRY	No.2	SPF
G - I	2x4	DRY	No.2	SPF
I - L	2x4	DRY	No.2	SPF
U - B	2x6	DRY	No.2	SPF
M - K	2x6	DRY	No.2	SPF
U - R	2x4	DRY	No.2	SPF
R - P	2x4	DRY	No.2	SPF
P - M	2x4	DRY	No.2	SPF
ALL WEBS EXCEPT	2x3	DRY	No.2	SPF

DRY: SEASONED LUMBER.

PLATES (table is in inches)

JT	TYPE	PLATES	W	LEN	Y	X
B	TMV+p	MT20	4.0	4.0		
C	TMWW-t	MT20	5.0	6.0	2.25	1.75
D	TTWW+m	MT20	7.0	8.0	Edge	2.25
E	TMWW-t	MT20	4.0	4.0		
F	TMW+w	MT20	2.0	4.0		
G	TS-t	MT20	3.0	6.0		
H	TMWW-t	MT20	4.0	4.0		
I	TTWW+m	MT20	7.0	8.0	Edge	2.25
J	TMWW-t	MT20	5.0	6.0	2.25	1.75
K	TMV+p	MT20	4.0	4.0		
M	BMVW1-t	MT20	5.0	6.0	2.00	3.00
N	BMWW-t	MT20	4.0	4.0		
O	BMWW+t	MT20	4.0	6.0		
P	BS-t	MT20	3.0	6.0		
Q	BMWWW-t	MT20	4.0	6.0		
R	BS-t	MT20	3.0	6.0		
S	BMWW+t	MT20	4.0	6.0		
T	BMWW-t	MT20	4.0	4.0		
U	BMVW1-t	MT20	5.0	6.0	2.00	3.00

Edge - INDICATES REFERENCE CORNER OF PLATE TOUCHES EDGE OF CHORD.

DIMENSIONS, SUPPORTS AND LOADINGS SPECIFIED BY FABRICATOR TO BE VERIFIED BY BUILDING DESIGNER

BEARINGS

JT	FACTORED GROSS REACTION VERT	HORZ	MAXIMUM FACTORED GROSS REACTION DOWN	HORZ	UPLIFT	INPUT BRG IN-SX	REQRD BRG IN-SX
U	2624	0	2624	0	0	5-8	5-8
M	2624	0	2624	0	0	5-8	5-8

UNFACTORED REACTIONS

JT	1ST LCASE COMBINED	MAX./MIN. COMPONENT REACTIONS SNOW	LIVE	PERM.LIVE	WIND	DEAD	SOIL
U	2034	1356 / 0	343 / 0	0 / 0	0 / 0	335 / 0	0 / 0
M	2034	1356 / 0	343 / 0	0 / 0	0 / 0	335 / 0	0 / 0

BEARING MATERIAL TO BE SPF NO.2 OR BETTER AT JOINT(S) U, M

BRACING

TOP CHORD TO BE SHEATHED OR MAX. PURLIN SPACING = 3.63 FT.
MAX. UNBRACED BOTTOM CHORD LENGTH = 10.00 FT. OR RIGID CEILING DIRECTLY APPLIED.

ALL PITCH BREAKS AND PERIMETER CORNER JOINTS MUST BE LATERALLY RESTRAINED.

1 LATERAL BRACE(S) AT 1/ 2 LENGTH OF E-S, H-O, C-U, J-M.

END VERTICAL(S) MUST BE SHEATHED OR HAVE BRACES AS INDICATED IN THE MAX. UNBRACED LENGTH COLUMN OF THE TABLE BELOW

LOADING

TOTAL LOAD CASES: (4)

CHORDS

MEMB. FR-TO	MAX. FORCE (LBS)	FACTORED VERT. LOAD LC1 (PLF) FROM	TO	MAX CSI (LC)	MAX. UNBRAC LENGTH
A- B	0 / 60	-122.2	-122.2	0.17 (1)	10.00
B- C	0 / 28	-122.2	-122.2	0.17 (1)	10.00
C- D	-2305 / 0	-122.2	-122.2	0.25 (1)	4.30
D- E	-2371 / 0	-122.2	-122.2	0.59 (1)	3.80
E- F	-2596 / 0	-122.2	-122.2	0.61 (1)	3.63
F- G	-2596 / 0	-122.2	-122.2	0.61 (1)	3.63
G- H	-2596 / 0	-122.2	-122.2	0.61 (1)	3.63
H- I	-2371 / 0	-122.2	-122.2	0.59 (1)	3.80
I- J	-2305 / 0	-122.2	-122.2	0.25 (1)	4.30
J- K	0 / 28	-122.2	-122.2	0.17 (1)	10.00
K- L	0 / 60	-122.2	-122.2	0.17 (1)	10.00
U- B	-319 / 0	0.0	0.0	0.02 (1)	7.81
M- K	-319 / 0	0.0	0.0	0.02 (1)	7.81
U- T	0 / 1492	-28.0	-28.0	0.39 (2)	10.00
T- S	0 / 1603	-28.0	-28.0	0.41 (2)	10.00
S- R	0 / 2372	-28.0	-28.0	0.44 (1)	10.00
R- Q	0 / 2372	-28.0	-28.0	0.44 (1)	10.00
Q- P	0 / 2372	-28.0	-28.0	0.44 (1)	10.00
P- O	0 / 2372	-28.0	-28.0	0.44 (1)	10.00
O- N	0 / 1603	-28.0	-28.0	0.41 (2)	10.00
N- M	0 / 1492	-28.0	-28.0	0.39 (2)	10.00

WEBS

MEMB. FR-TO	MAX. FORCE (LBS)	MAX CSI (LC)
C- T	0 / 198	0.04 (2)
T- D	0 / 192	0.04 (3)
D- S	0 / 1401	0.32 (1)
S- E	-1043 / 0	0.43 (1)
E- Q	0 / 416	0.09 (1)
Q- F	-561 / 0	0.71 (1)
Q- H	0 / 416	0.09 (1)
O- H	-1043 / 0	0.43 (1)
O- I	0 / 1401	0.32 (1)
N- I	0 / 192	0.04 (3)
N- J	0 / 198	0.04 (2)
U- C	-2685 / 0	0.60 (1)
J- M	-2685 / 0	0.60 (1)

LICENSED PROFESSIONAL ENGINEER
9112
S. KATSOULAKOS
PROVINCE OF ONTARIO

DWG NO. TAM-15739-17
STRUCTURAL
COMPONENT ONLY

DESIGN CRITERIA

SPECIFIED LOADS:

TOP CH.	LL	=	38.3	PSF
	DL	=	3.0	PSF
BOT CH.	LL	=	10.5	PSF
	DL	=	7.0	PSF
TOTAL LOAD		=	58.7	PSF

SPACING = 24.0 IN. C/C

LOADING IN FLAT SECTION BASED ON A SLOPE OF 6.00/12

THIS TRUSS IS DESIGNED FOR RESIDENTIAL OR SMALL BUILDING REQUIREMENTS OF PART 9, NBCC 2010

THIS DESIGN COMPLIES WITH:
- PART 9 OF OBC 2012 , BCBC 2012 , ABC 2014
- CSA 086-09
- TPIC 2011

(55 % OF 54.4 P.S.F. G.S.L. PLUS 8.4 P.S.F. RAIN LOAD) EQUALS 38.3 P.S.F. SPECIFIED ROOF LIVE LOAD

ALLOWABLE DEFL.(LL)= L/360 (1.09")
CALCULATED VERT. DEFL.(LL) = L/ 999 (0.15")
ALLOWABLE DEFL.(TL)= L/360 (1.09")
CALCULATED VERT. DEFL.(TL) = L/ 999 (0.22")

CSI: TC=0.61 (E-F:1) , BC=0.44 (Q-S:1) , WB=0.71 (F-Q:1) , SSI=0.29 (H-I:1)

DOL LUMBER=1.00 NAIL=1.00 LS BEND=1.10 COMP=1.10 SHEAR=1.10 TENS= 1.10

COMPANION LIVE LOAD FACTOR = 0.50

AUTOSOLVE HEELS OFF

TRUSS PLATE MANUFACTURER IS NOT RESPONSIBLE FOR QUALITY CONTROL IN THE TRUSS MANUFACTURING PLANT .

NAIL VALUES

PLATE	GRIP(DRY) (PSI) MAX	MIN	SHEAR (PLI) MAX	MIN	SECTION (PLI) MAX	MIN
MT20	618	354	1667	822	2284	1656

PLATE PLACEMENT TOL. = 0.250 inches

PLATE ROTATION TOL. = 5.0 Deg.

TPI GRIP= 0.87 (C) (INPUT = 0.90)
TPI METAL= 0.65 (J) (INPUT = 1.00)

JOB NAME	TRUSS NAME	QUANTITY	PLY	JOB DESC. 42087	DRWG NO.
272820	T5	5	1	TRUSS DESC.	

Tamarack Roof Truss, Burlington

Version 8.030 S Oct 5 2016 MiTek Industries, Inc. Mon Sep 11 07:41:54 2017 Page 1

ID:ICtWqkzHJcrjayyEloEouzy77mm-6ahTHv0ukNDKzDwPnvVx52aiaFgg_df0MDmyvgyenVx

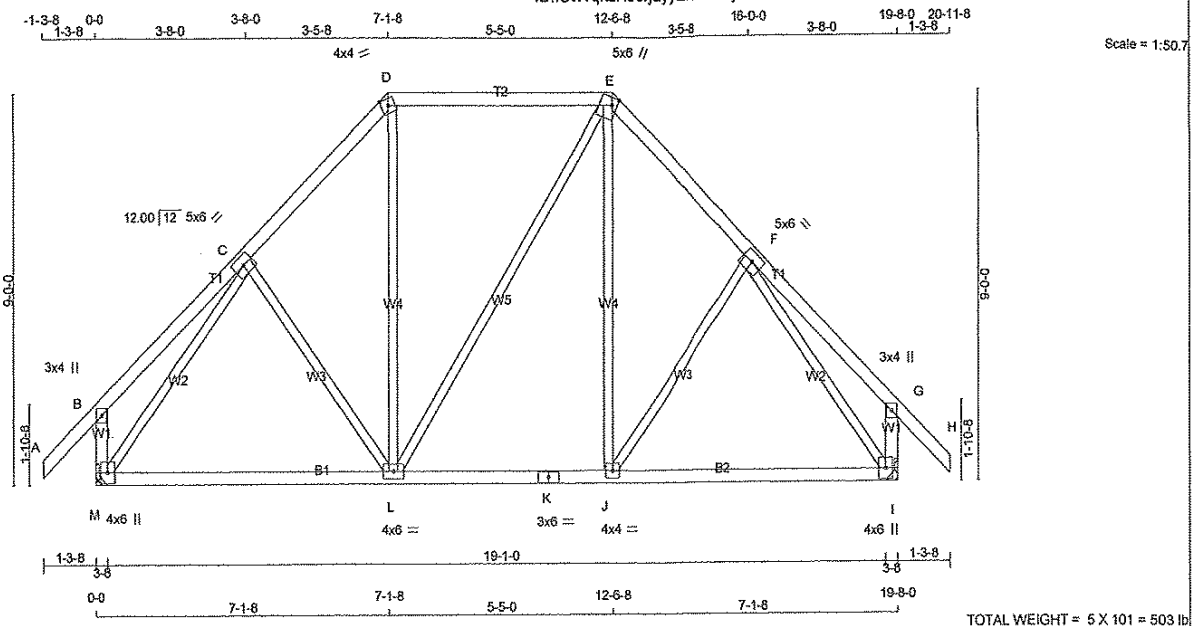

TOTAL WEIGHT = 5 X 101 = 503 lb

LUMBER

N. L. G. A. RULES

CHORDS	SIZE		LUMBER	DESCR.
A - D	2x4	DRY	No.2	SPF
D - E	2x4	DRY	No.2	SPF
E - H	2x4	DRY	No.2	SPF
M - B	2x4	DRY	No.2	SPF
I - G	2x4	DRY	No.2	SPF
M - K	2x4	DRY	No.2	SPF
K - I	2x4	DRY	No.2	SPF
ALL WEBS EXCEPT	2x3	DRY	No.2	SPF

DRY: SEASONED LUMBER.

PLATES (table is in inches)

JT	TYPE	PLATES	W	LEN	Y	X
B	TMV+p	MT20	3.0	4.0		
C	TMWW-t	MT20	5.0	6.0		
D	TTW-m	MT20	4.0	4.0	Edge	
E	TTWW+m	MT20	5.0	6.0	2.00	1.50
F	TMWW-t	MT20	5.0	6.0		
G	TMV+p	MT20	3.0	4.0		
I	BMVW1+p	MT20	4.0	6.0		
J	BMWW-t	MT20	4.0	4.0		
K	BS-t	MT20	3.0	6.0		
L	BMWWW-t	MT20	4.0	6.0		
M	BMVW1+p	MT20	4.0	6.0		

Edge - INDICATES REFERENCE CORNER OF PLATE TOUCHES EDGE OF CHORD.

DIMENSIONS, SUPPORTS AND LOADINGS SPECIFIED BY FABRICATOR TO BE VERIFIED BY BUILDING DESIGNER

BEARINGS

JT	FACTORED GROSS REACTION VERT	HORZ	MAXIMUM FACTORED GROSS REACTION DOWN	HORZ	UPLIFT	INPUT BRG	REQRD BRG
M	1648	0	1648	0	0	IN-SX	IN-SX
						HANGER BY OTHERS	
						MIN. SEAT SIZE: 3-8	
I	1648	0	1648	0	0	HANGER BY OTHERS	
						MIN. SEAT SIZE: 3-8	

UNFACTORED REACTIONS

JT	1ST LCASE COMBINED	MAX /MIN. COMPONENT REACTIONS SNOW	LIVE	PERM.LIVE	WIND	DEAD	SOIL
M	1270	859 / 0	207 / 0	0 / 0	0 / 0	205 / 0	0 / 0
I	1270	859 / 0	207 / 0	0 / 0	0 / 0	205 / 0	0 / 0

BRACING

TOP CHORD TO BE SHEATHED OR MAX. PURLIN SPACING = 5.71 FT.
MAX. UNBRACED BOTTOM CHORD LENGTH = 10.00 FT. OR RIGID CEILING DIRECTLY APPLIED.

ALL PITCH BREAKS AND PERIMETER CORNER JOINTS MUST BE LATERALLY RESTRAINED.

LOADING

TOTAL LOAD CASES: (4)

CHORDS

MEMB. FR-TO	MAX. FACTORED FORCE (LBS)	FACTORED VERT. LOAD LC1 (PLF) FROM	TO	MAX CSI (LC)	MAX. UNBRAC LENGTH
A- B	0 / 60	-122.2	-122.2	0.17 (1)	10.00
B- C	0 / 36	-122.2	-122.2	0.25 (1)	10.00
C- D	-1146 / 0	-122.2	-122.2	0.20 (1)	5.71
D- E	-788 / 0	-122.2	-122.2	0.47 (1)	6.10
E- F	-1148 / 0	-122.2	-122.2	0.20 (1)	5.71
F- G	0 / 36	-122.2	-122.2	0.25 (1)	10.00
G- H	0 / 60	-122.2	-122.2	0.17 (1)	10.00
M- B	-335 / 0	0.0	0.0	0.04 (1)	7.81
I- G	-335 / 0	0.0	0.0	0.04 (1)	7.81
M- L	0 / 856	-28.0	-28.0	0.39 (2)	10.00
L- K	0 / 787	-28.0	-28.0	0.37 (2)	10.00
K- J	0 / 787	-28.0	-28.0	0.37 (2)	10.00
J- I	0 / 856	-28.0	-28.0	0.39 (2)	10.00

WEBS

MEMB. FR-TO	MAX. FACTORED FORCE (LBS)	MAX CSI (LC)
C- L	-122 / 62	0.09 (1)
L- D	0 / 325	0.07 (2)
L- E	0 / 0	0.00 (1)
J- E	0 / 324	0.07 (2)
J- F	-122 / 62	0.09 (1)
M- C	-1497 / 0	0.98 (1)
F- I	-1496 / 0	0.98 (1)

DWG NO. TAM 45740-17
STRUCTURAL
COMPONENT ONLY

[M][F]

DESIGN CRITERIA

SPECIFIED LOADS:

TOP CH.	LL	=	38.3	PSF
	DL	=	3.0	PSF
BOT CH.	LL	=	10.5	PSF
	DL	=	7.0	PSF
TOTAL LOAD		=	58.7	PSF

SPACING = 24.0 IN. C/C

LOADING IN FLAT SECTION BASED ON A SLOPE OF 6.00/12

THIS TRUSS IS DESIGNED FOR RESIDENTIAL OR SMALL BUILDING REQUIREMENTS OF PART 9, NBCC 2010

THIS DESIGN COMPLIES WITH:
- PART 9 OF OBC 2012 , BCBC 2012 , ABC 2014
- CSA 086-09
- TPIC 2011

(55 % OF 54.4 P.S.F. G.S.L. PLUS 8.4 P.S.F. RAIN LOAD) EQUALS 38.3 P.S.F. SPECIFIED ROOF LIVE LOAD

ALLOWABLE DEFL.(LL)= L/360 (0.66")
CALCULATED VERT. DEFL.(LL) = L/ 999 (0.12")
ALLOWABLE DEFL.(TL)= L/360 (0.66")
CALCULATED VERT. DEFL.(TL) = L/ 999 (0.20")

CSI: TC=0.47 (D-E:1) , BC=0.39 (I-J:2) , WB=0.98 (C-M:1) , SSI=0.26 (D-E:1)

DOL LUMBER=1.00 NAIL=1.00 LS BEND=1.10 COMP=1.10 SHEAR=1.10 TENS= 1.10

COMPANION LIVE LOAD FACTOR = 0.50

TRUSS PLATE MANUFACTURER IS NOT RESPONSIBLE FOR QUALITY CONTROL IN THE TRUSS MANUFACTURING PLANT .

NAIL VALUES

PLATE	GRIP(DRY) (PSI) MAX	MIN	SHEAR (PLI) MAX	MIN	SECTION (PLI) MAX	MIN
MT20	618	354	1667	822	2284	1656

PLATE PLACEMENT TOL. = 0.250 inches

PLATE ROTATION TOL. = 5.0 Deg.

JSI GRIP= 0.78 (C) (INPUT = 0.90)
JSI METAL= 0.37 (C) (INPUT = 1.00)

JOB NAME	TRUSS NAME	QUANTITY	PLY	JOB DESC. 42067	DRWG NO.
272820	T6	3	1	TRUSS DESC.	

Tamarack Roof Truss, Burlington

Version 8.030 S Oct 5 2016 MiTek Industries, Inc. Mon Sep 11 07:41:54 2017 Page 1

ID:ICtWqkzHJcrjayyEloEouzy77mm-6ahTHv0ukNDKzDwPnvVx52an5Fij_qb0MDmyvgyenVx

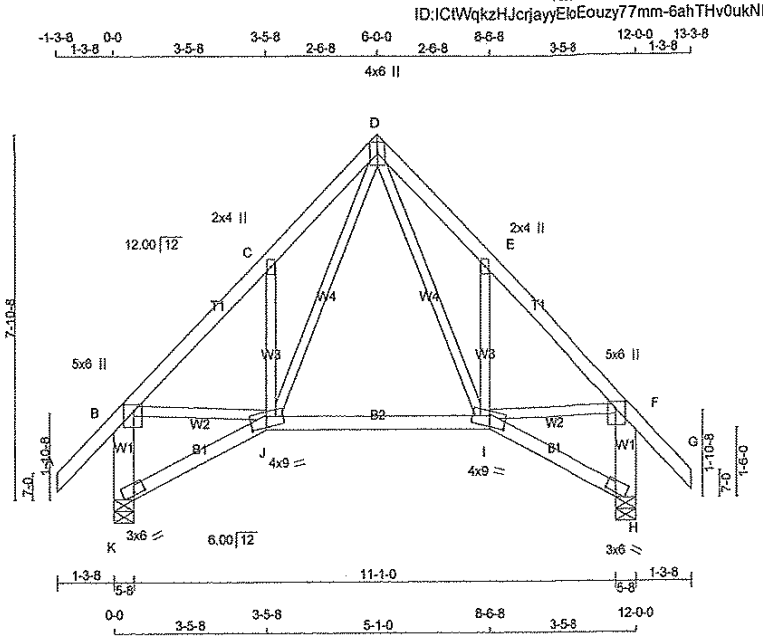

TOTAL WEIGHT = 3 X 65 = 195 lb

LUMBER

N. L. G. A. RULES

CHORDS	SIZE		LUMBER	DESCR.
A - D	2x4	DRY	No.2	SPF
D - G	2x4	DRY	No.2	SPF
K - B	2x6	DRY	No.2	SPF
H - F	2x6	DRY	No.2	SPF
K - J	2x4	DRY	No.2	SPF
J - I	2x4	DRY	No.2	SPF
I - H	2x4	DRY	No.2	SPF
ALL WEBS EXCEPT	2x3	DRY	No.2	SPF

DRY: SEASONED LUMBER.

PLATES (table is in inches)

JT	TYPE	PLATES	W	LEN	Y	X
B	TMVW+p	MT20	5.0	6.0	1.75	2.75
C	TMW+w	MT20	2.0	4.0		
D	TTWW+p	MT20	4.0	6.0		
E	TMW+w	MT20	2.0	4.0		
F	TMVW+p	MT20	5.0	6.0	1.75	2.75
H	BVM1-I	MT20	3.0	6.0	0.75	3.00
I	BBWWW-m	MT20	4.0	9.0	2.75	4.50
J	BBWWW-m	MT20	4.0	9.0	2.75	4.50
K	BVM1-I	MT20	3.0	6.0	0.75	3.00

DIMENSIONS, SUPPORTS AND LOADINGS SPECIFIED BY FABRICATOR TO BE VERIFIED BY BUILDING DESIGNER

BEARINGS

JT	FACTORED GROSS REACTION VERT	HORZ	MAXIMUM FACTORED GROSS REACTION DOWN	HORZ	UPLIFT	INPUT BRG IN-SX	REQRD BRG IN-SX
K	1072	0	1072	0	0	5-8	5-8
H	1072	0	1072	0	0	5-8	5-8

UNFACTORED REACTIONS

JT	1ST LCASE COMBINED	MAX /MIN COMPONENT REACTIONS SNOW	LIVE	PERM.LIVE	WIND	DEAD	SOIL
K	820	566 / 0	126 / 0	0 / 0	0 / 0	128 / 0	0 / 0
H	820	566 / 0	126 / 0	0 / 0	0 / 0	128 / 0	0 / 0

BEARING MATERIAL TO BE SPF NO.2 OR BETTER AT JOINT(S) K, H

BRACING

TOP CHORD TO BE SHEATHED OR MAX. PURLIN SPACING = 6.13 FT.
MAX. UNBRACED BOTTOM CHORD LENGTH = 10.00 FT. OR RIGID CEILING DIRECTLY APPLIED.

ALL PITCH BREAKS AND PERIMETER CORNER JOINTS MUST BE LATERALLY RESTRAINED.

LOADING

TOTAL LOAD CASES: (4)

CHORDS

MEMB. FR-TO	MAX. FACTORED FORCE (LBS)	FACTORED VERT. LOAD (PLF) FROM	TO	LC1 CSI (LC)	MAX UNBRAC LENGTH
A- B	0 / 60	-122.2	-122.2	0.17 (1)	10.00
B- C	-928 / 0	-122.2	-122.2	0.18 (1)	6.22
C- D	-987 / 0	-122.2	-122.2	0.14 (1)	6.13
D- E	-987 / 0	-122.2	-122.2	0.14 (1)	6.13
E- F	-928 / 0	-122.2	-122.2	0.18 (1)	6.22
F- G	0 / 60	-122.2	-122.2	0.17 (1)	10.00
K- B	-1023 / 0	0.0	0.0	0.08 (1)	7.81
H- F	-1023 / 0	0.0	0.0	0.08 (1)	7.81
K- J	0 / 0	-28.0	-28.0	0.10 (2)	10.00
J- I	0 / 435	-28.0	-28.0	0.26 (2)	10.00
I- H	0 / 0	-28.0	-28.0	0.10 (2)	10.00

WEBS

MEMB. FR-TO	MAX. FACTORED FORCE (LBS)	MAX CSI (LC)
D- I	0 / 616	0.14 (1)
I- E	-450 / 0	0.11 (1)
J- D	0 / 616	0.14 (1)
J- C	-450 / 0	0.11 (1)
B- J	0 / 674	0.15 (1)
I- F	0 / 674	0.15 (1)

LICENSED PROFESSIONAL ENGINEER
9/11/17
S. KATSOULAKOS
PROVINCE OF ONTARIO

DWG NO. TAM 45741-17
STRUCTURAL
COMPONENT ONLY

(M)(F)

DESIGN CRITERIA

SPECIFIED LOADS:

TOP CH.	LL	=	38.3	PSF
	DL	=	3.0	PSF
BOT CH.	LL	=	10.5	PSF
	DL	=	7.0	PSF
TOTAL LOAD		=	58.7	PSF

SPACING = 24.0 IN. C/C

THIS TRUSS IS DESIGNED FOR RESIDENTIAL OR SMALL BUILDING REQUIREMENTS OF PART 9, NBCC 2010

THIS DESIGN COMPLIES WITH:
- PART 9 OF OBC 2012 , BCBC 2012 , ABC 2014
- CSA 086-09
- TPIC 2011

(55 % OF 54.4 P.S.F. G.S.L. PLUS 8.4 P.S.F. RAIN LOAD) EQUALS 38.3 P.S.F. SPECIFIED ROOF LIVE LOAD

ALLOWABLE DEFL.(LL)= L/360 (0.40")
CALCULATED VERT. DEFL.(LL) = L/ 999 (0.06")
ALLOWABLE DEFL.(TL)= L/360 (0.40")
CALCULATED VERT. DEFL.(TL) = L/ 999 (0.09")

CSI: TC=0.18 (B-C:1) , BC=0.26 (I-J:2) , WB=0.15 (B-J:1) , SSI=0.14 (B-C:1)

DOL LUMBER=1.00 NAIL=1.00 LS BEND=1.10 COMP=1.10 SHEAR=1.10 TENS= 1.10

COMPANION LIVE LOAD FACTOR = 0.50

AUTOSOLVE HEELS OFF

TRUSS PLATE MANUFACTURER IS NOT RESPONSIBLE FOR QUALITY CONTROL IN THE TRUSS MANUFACTURING PLANT .

NAIL VALUES

PLATE	GRIP(DRY) (PSI) MAX	MIN	SHEAR (PLI) MAX	MIN	SECTION (PLI) MAX	MIN
MT20	618	354	1667	822	2284	1656

PLATE PLACEMENT TOL. = 0.250 inches

PLATE ROTATION TOL. = 5.0 Deg.

JSI GRIP= 0.77 (I) (INPUT = 0.90)
JSI METAL= 0.21 (F) (INPUT = 1.00)

JOB NAME	TRUSS NAME	QUANTITY	PLY	JOB DESC. 42067	DRWG NO.
272820	T7TCX	6	1	TRUSS DESC.	

Tamarack Roof Truss, Burlington

Version 8.030 S Oct 5 2016 MiTek Industries, Inc. Mon Sep 11 07:41:54 2017 Page 1
ID:ICtWqkzHJcrjayyEloEouzy77mm-6ahTHv0ukNDKzDwPnvVx52anEFmy_sr0MDmyvgyenVx

Scale = 1:21.5

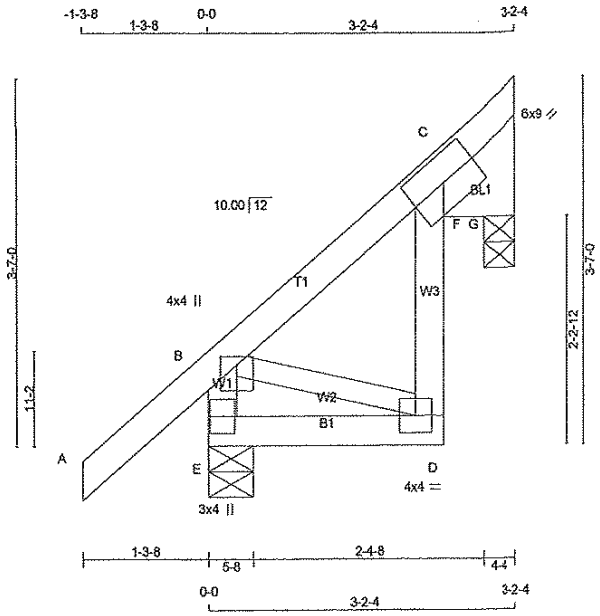

TOTAL WEIGHT = 6 X 17 = 104 lb

LUMBER
N. L. G. A. RULES

CHORDS	SIZE		LUMBER	DESCR.
A - C	2x4	DRY	No.2	SPF
D - C	2x4	DRY	No.2	SPF
E - B	2x4	DRY	No.2	SPF
E - D	2x4	DRY	No.2	SPF
BEARING BLOCKS				
BL1	2x10	DRY	No.2	SPF
ALL WEBS	2x3	DRY	No.2	SPF

DRY: SEASONED LUMBER.

BEARING NOTE: GAP BETWEEN INSIDE OF TOP CHORD BEARING AND FIRST DIAGONAL OR VERTICAL WEB SHALL NOT EXCEED 0.5 INCHES.

PLATES (table is in inches)

JT	TYPE	PLATES	W	LEN	Y	X
B	TMVW+p	MT20	4.0	4.0	1.00	2.00
C	TMVK1-t	MT20	6.0	9.0		
D	BMVW-t	MT20	4.0	4.0		
E	BMV1+p	MT20	3.0	4.0		

DIMENSIONS, SUPPORTS AND LOADINGS SPECIFIED BY FABRICATOR TO BE VERIFIED BY BUILDING DESIGNER

BEARINGS

JT	FACTORED GROSS REACTION VERT	HORZ	MAXIMUM FACTORED GROSS REACTION DOWN	HORZ	UPLIFT	INPUT BRG IN-SX	REQRD BRG IN-SX
G(C)	146	0	146	0	0	4-4	4-4
							(** SEE "BEARING NOTE" **)
E	387	0	387	0	0	5-8	5-8

UNFACTORED REACTIONS

JT	1ST LCASE COMBINED	MAX./MIN. COMPONENT REACTIONS SNOW	LIVE	PERM.LIVE	WIND	DEAD	SOIL
G(C)	114	74 / 0	20 / 0	0 / 0	0 / 0	19 / 0	0 / 0
E	284	217 / 0	30 / 0	0 / 0	0 / 0	37 / 0	0 / 0

BEARING MATERIAL TO BE SPF NO.2 OR BETTER AT JOINT(S) G(C), E

BRACING
TOP CHORD TO BE SHEATHED OR MAX. PURLIN SPACING = 6.25 FT.
MAX. UNBRACED BOTTOM CHORD LENGTH = 10.00 FT. OR RIGID CEILING DIRECTLY APPLIED.

ALL PITCH BREAKS AND PERIMETER CORNER JOINTS MUST BE LATERALLY RESTRAINED.

LOADING
TOTAL LOAD CASES: (5)

CHORDS

MEMB. FR-TO	MAX. FACTORED FORCE (LBS)	FACTORED VERT. LOAD (PLF) FROM	TO	LC1	MAX CSI (LC)	MAX. UNBRAC LENGTH
A- B	0 / 54	-122.2	-122.2	0.17 (1)	10.00	
B- C	-43 / 0	-122.2	-122.2	0.12 (1)	6.25	
D- F	0 / 56	0.0	0.0	0.10 (1)	10.00	
F- C	0 / 56	0.0	0.0	0.10 (1)	10.00	
E- B	-353 / 0	0.0	0.0	0.04 (1)	7.81	
E- D	0 / 0	-28.0	-28.0	0.05 (3)	10.00	

WEBS

MEMB. FR-TO	MAX. FACTORED FORCE (LBS)	MAX CSI (LC)
B- D	0 / 34	0.01 (1)
C- G	-221 / 0	0.01 (1)
F- G	0 / 166	0.00 (1)

CANTILEVER ANALYSIS HAS BEEN CONSIDERED IN THIS DESIGN

DESIGN CRITERIA

SPECIFIED LOADS:

TOP CH.	LL	=	38.3	PSF
	DL	=	3.0	PSF
BOT CH.	LL	=	10.5	PSF
	DL	=	7.0	PSF
TOTAL LOAD		=	58.7	PSF

SPACING = 24.0 IN. C/C

THIS TRUSS IS DESIGNED FOR RESIDENTIAL OR SMALL BUILDING REQUIREMENTS OF PART 9, NBCC 2010

THIS DESIGN COMPLIES WITH:
- PART 9 OF OBC 2012 , BCBC 2012 , ABC 2014
- CSA 086-09
- TPIC 2011

(55 % OF 54.4 P.S.F. G.S.L. PLUS 8.4 P.S.F. RAIN LOAD) EQUALS 38.3 P.S.F. SPECIFIED ROOF LIVE LOAD

ALLOWABLE DEFL.(LL)= L/360 (0.19")
CALCULATED VERT. DEFL.(LL) = L/ 999 (0.00")
ALLOWABLE DEFL.(TL)= L/360 (0.19")
CALCULATED VERT. DEFL.(TL) = L/ 999 (0.01")

CSI: TC=0.17 (A-B:1) , BC=0.05 (D-E:3) , WB=0.01 (C-G:1) , SSI=0.10 (A-B:1)

DOL LUMBER=1.00 NAIL=1.00 LS BEND=1.10 COMP=1.10 SHEAR=1.10 TENS= 1.10

COMPANION LIVE LOAD FACTOR = 0.50

TRUSS PLATE MANUFACTURER IS NOT RESPONSIBLE FOR QUALITY CONTROL IN THE TRUSS MANUFACTURING PLANT .

NAIL VALUES

PLATE	GRIP(DRY) (PSI) MAX	MIN	SHEAR (PLI) MAX	MIN	SECTION (PLI) MAX	MIN
MT20	618	354	1667	822	2284	1656

PLATE PLACEMENT TOL. = 0.250 inches

PLATE ROTATION TOL. = 5.0 Deg.

JSI GRIP= 0.27 (B) (INPUT = 0.90)
JSI METAL= 0.07 (B) (INPUT = 1.00)

LICENSED PROFESSIONAL ENGINEER
9147
S. KATSOULAKOS
PROVINCE OF ONTARIO

DWG NO. TAM 45742-17
STRUCTURAL
COMPONENT ONLY

JOB NAME	TRUSS NAME	QUANTITY	PLY	JOB DESC. 42067	DRWG NO.
272821	T8	1	2	TRUSS DESC.	

Tamarack Roof Truss, Burlington

Version 8.030 S Oct 5 2016 MiTek Industries, Inc. Mon Sep 11 07:44:05 2017 Page 1

ID:VZPLc5c1tt2s2iP8vPCsK7y77Bn-mm6_nib3udjlBMRaywLfvgW6E3GJByWlU5?O?byenTu

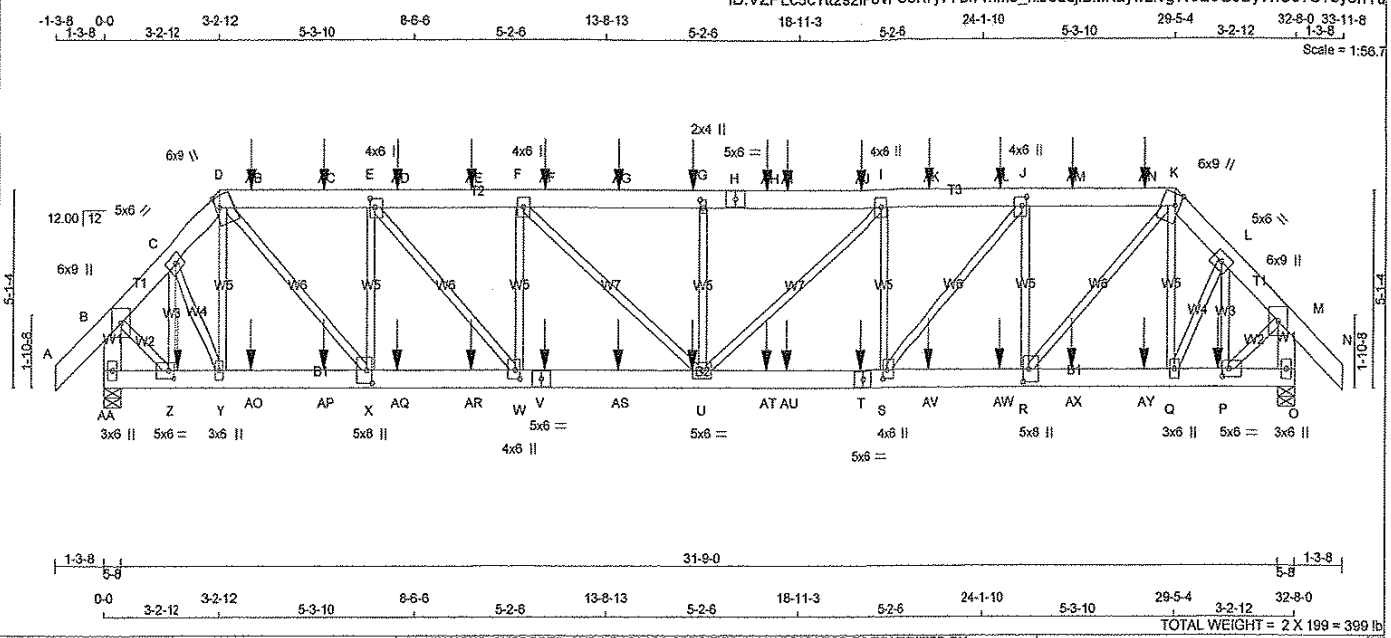

TOTAL WEIGHT = 2 X 199 = 399 lb

LUMBER

N. L. G. A. RULES

CHORDS	SIZE		LUMBER	DESCR.
A - D	2x6	DRY	No.2	SPF
D - H	2x6	DRY	No.2	SPF
H - K	2x6	DRY	No.2	SPF
K - N	2x6	DRY	No.2	SPF
AA- B	2x6	DRY	No.2	SPF
O - M	2x6	DRY	No.2	SPF
AA- V	2x6	DRY	No.2	SPF
V - T	2x6	DRY	No.2	SPF
T - O	2x6	DRY	No.2	SPF
ALL WEBS EXCEPT	2x3	DRY	No.2	SPF

DRY: SEASONED LUMBER

DESIGN CONSISTS OF 2 TRUSSES BUILT SEPARATELY THEN FASTENED TOGETHER AS FOLLOWS:

CHORDS	#ROWS	SURFACE SPACING (IN)	LOAD(PLF)
TOP CHORDS : (0.122"X3") SPIRAL NAILS			
A- D	2	12	TOP
D- H	2	12	SIDE(183.1)
H- K	2	12	SIDE(0.1)
K- N	2	12	TOP
AA- B	2	12	TOP
O- M	2	12	TOP
BOTTOM CHORDS : (0.122"X3") SPIRAL NAILS			
AA- V	2	12	SIDE(183.1)
V- T	2	12	SIDE(183.1)
T- O	2	12	SIDE(183.1)
WEBS : (0.122"X3") SPIRAL NAILS			
2x3	1	6	

NAILS TO BE DRIVEN FROM ONE SIDE ONLY.

GIRDER NAILING ASSUMES NAILED HANGERS ARE FASTENED WITH MIN. 3-0 INCH NAILS.

TOP - COMPONENTS ARE LOADED FROM THE TOP AND MUST BE PLACED ON TOP EDGE OF ALL PLIES FOR THE LOAD TO BE TRANSFERRED TO EACH PLY.

SIDE - PLF SHOWN IS THE EQUIVALENT UDL APPLIED TO ONE SIDE THAT THE CORRESPONDING NAILING PATTERN SHALL BE CAPABLE OF TRANSFERING. REMAINING PLF MUST BE APPLIED ON THE OPPOSITE SIDE OR ON THE TOP.

PLATES (table is in inches)

JT	TYPE	PLATES	W	LEN	Y	X
B	TMWW+p	MT20	6.0	9.0		
C	TMWW-t	MT20	5.0	6.0		
D	TTWW+m	MT20	6.0	9.0	3.50	1.50
E	TMWW+t	MT20	4.0	6.0	2.75	1.50
F	TMWW+t	MT20	4.0	6.0		
G	TMW+w	MT20	2.0	4.0	2.50	1.00
H	TS-t	MT20	5.0	6.0		
I	TMWW+t	MT20	4.0	6.0		
J	TMWW+t	MT20	4.0	6.0	2.75	1.50
K	TTWW+m	MT20	6.0	9.0	3.50	1.50
L	TMWW-t	MT20	5.0	6.0		
M	TMVW+p	MT20	6.0	9.0		
O	BMV1+p	MT20	3.0	6.0		
P	BMWW-t	MT20	5.0	6.0	2.50	2.00
Q	BMWW+t	MT20	3.0	6.0		
R	BMWW+t	MT20	5.0	8.0	4.00	1.75
S	BMWW+t	MT20	4.0	6.0	2.75	1.50

DIMENSIONS, SUPPORTS AND LOADINGS SPECIFIED BY FABRICATOR TO BE VERIFIED BY BUILDING DESIGNER

BEARINGS

JT	FACTORED GROSS REACTION VERT	HORZ	MAXIMUM GROSS REACTION DOWN	HORZ	UPLIFT	INPUT BRG IN-SX	REQRD BRG IN-SX
AA	6086	0	6086	0	0	5-8	5-8
O	6133	0	6133	0	0	5-8	5-8

UNFACTORED REACTIONS

JT	1ST LCASE COMBINED	MAX./MIN. COMPONENT REACTIONS SNOW	LIVE	PERM.LIVE	WIND	DEAD	SOIL
AA	4746	3114 / 0	833 / 0	0 / 0	0 / 0	799 / 0	0 / 0
O	4782	3137 / 0	839 / 0	0 / 0	0 / 0	806 / 0	0 / 0

BEARING MATERIAL TO BE SPF NO.2 OR BETTER AT JOINT(S) AA, O

BRACING

TOP CHORD TO BE SHEATHED OR MAX. PURLIN SPACING = 3.45 FT.
MAX. UNBRACED BOTTOM CHORD LENGTH = 10.00 FT. OR RIGID CEILING DIRECTLY APPLIED.

ALL PITCH BREAKS AND PERIMETER CORNER JOINTS MUST BE LATERALLY RESTRAINED.

LOADING

TOTAL LOAD CASES: (4)

CHORDS

MEMB. FR-TO	MAX. FACTORED FORCE (LBS)	FACTORED VERT. LOAD (PLF) FROM	TO	LC1	MAX CSI (LC)	MAX. UNBRAC LENGTH
A- B	0 / 63	-122.2	-122.2	0.05	(1)	10.00
B- C	-4775 / 0	-122.2	-122.2	0.08	(1)	5.25
C- D	-5627 / 0	-122.2	-122.2	0.06	(1)	4.93
D-AB	-7641 / 0	-122.2	-122.2	0.20	(1)	4.24
AB-AC	-7641 / 0	-122.2	-122.2	0.20	(1)	4.24
AC- E	-7641 / 0	-122.2	-122.2	0.20	(1)	4.24
E-AD	-9989 / 0	-122.2	-122.2	0.24	(1)	3.75
AD-AE	-9989 / 0	-122.2	-122.2	0.24	(1)	3.75
AE- F	-9989 / 0	-122.2	-122.2	0.24	(1)	3.75
F-AF	-11193 / 0	-122.2	-122.2	0.34	(1)	3.47
AF-AG	-11193 / 0	-122.2	-122.2	0.34	(1)	3.47
AG- G	-11193 / 0	-122.2	-122.2	0.34	(1)	3.47
G- H	-11193 / 0	-122.2	-122.2	0.36	(1)	3.45
H-AH	-11193 / 0	-122.2	-122.2	0.36	(1)	3.45
AH-AI	-11193 / 0	-122.2	-122.2	0.36	(1)	3.45
AI-AJ	-11193 / 0	-122.2	-122.2	0.36	(1)	3.45
AJ- I	-11193 / 0	-122.2	-122.2	0.36	(1)	3.45
I-AK	-10141 / 0	-122.2	-122.2	0.24	(1)	3.72
AK-AL	-10141 / 0	-122.2	-122.2	0.24	(1)	3.72
AL- J	-10141 / 0	-122.2	-122.2	0.24	(1)	3.72
J-AM	-7706 / 0	-122.2	-122.2	0.20	(1)	4.22
AM-AN	-7706 / 0	-122.2	-122.2	0.20	(1)	4.22
AN- K	-7706 / 0	-122.2	-122.2	0.20	(1)	4.22
K- L	-5679 / 0	-122.2	-122.2	0.05	(1)	4.91
L- M	-4813 / 0	-122.2	-122.2	0.08	(1)	5.23
M- N	0 / 63	-122.2	-122.2	0.05	(1)	10.00
AA- B	-6063 / 0	0.0	0.0	0.23	(1)	6.01
O- M	-6110 / 0	0.0	0.0	0.23	(1)	5.99
AA- Z	0 / 0	-28.0	-28.0	0.01	(3)	10.00
Z- Y	0 / 3326	-28.0	-28.0	0.33	(1)	10.00
Y-AO	0 / 3919	-28.0	-28.0	0.37	(1)	10.00
AO-AP	0 / 3919	-28.0	-28.0	0.37	(1)	10.00
AP- X	0 / 3919	-28.0	-28.0	0.37	(1)	10.00
X-AQ	0 / 7641	-28.0	-28.0	0.59	(1)	10.00
AQ-AR	0 / 7641	-28.0	-28.0	0.59	(1)	10.00
AR- W	0 / 7641	-28.0	-28.0	0.59	(1)	10.00
W- V	0 / 9989	-28.0	-28.0	0.78	(1)	10.00
V-AS	0 / 9989	-28.0	-28.0	0.78	(1)	10.00
AS- U	0 / 9989	-28.0	-28.0	0.78	(1)	10.00

WEBS

MEMB. FR-TO	MAX. FACTORED FORCE (LBS)	MAX CSI (LC)
Y- D	-592 / 0	0.10 (1)
D- X	0 / 5574	0.69 (1)
X- E	-3282 / 0	0.57 (1)
E- W	0 / 3589	0.44 (1)
W- F	-1799 / 0	0.31 (1)
S- I	-1688 / 0	0.29 (1)
S- J	0 / 3722	0.46 (1)
R- J	-3375 / 0	0.59 (1)
R- K	0 / 5617	0.70 (1)
Q- K	-589 / 0	0.10 (1)
C- Y	0 / 1462	0.18 (1)
Q- L	0 / 1483	0.18 (1)
U- G	-814 / 0	0.14 (1)
F- U	0 / 1649	0.20 (1)
U- I	0 / 1441	0.18 (1)
P- L	-2154 / 0	0.22 (1)
Z- C	-2126 / 0	0.22 (1)
B- Z	0 / 4069	0.50 (1)
P- M	0 / 4102	0.51 (1)

LICENSED PROFESSIONAL ENGINEER
9/11/17
S. KATSOULAKOS
PROVINCE OF ONTARIO

[M]

DESIGN CRITERIA

SPECIFIED LOADS:

TOP CH.	LL	=	38.3	PSF
	DL	=	3.0	PSF
BOT CH.	LL	=	10.5	PSF
	DL	=	7.0	PSF
TOTAL LOAD		=	58.7	PSF

SPACING = 24.0 IN. C/C

LOADING IN FLAT SECTION BASED ON A SLOPE OF 6.00/12

THIS TRUSS IS DESIGNED FOR RESIDENTIAL OR SMALL BUILDING REQUIREMENTS OF PART 9, NBCC 2010

THIS DESIGN COMPLIES WITH:
- PART 9 OF OBC 2012 , BCBC 2012 , ABC 2014
- CSA 086-09
- TPIC 2011

DESIGN ASSUMPTIONS
-OVERHANG NOT TO BE ALTERED OR CUT OFF.

(55 % OF 54.4 P.S.F. G.S.L. PLUS 8.4 P.S.F. RAIN LOAD) EQUALS 38.3 P.S.F. SPECIFIED ROOF LIVE LOAD

ALLOWABLE DEFL.(LL)= L/360 (1.09")
CALCULATED VERT. DEFL.(LL) = L/ 999 (0.26")
ALLOWABLE DEFL.(TL)= L/360 (1.09")
CALCULATED VERT. DEFL.(TL) = L/ 977 (0.40")

CSI: TC=0.36 (G-I:1) , BC=0.80 (S-U:1) , WB=0.70 (K-R:1) , SSI=0.24 (S-U:1)

DOL LUMBER=1.00 NAIL=1.00 LS BEND=1.00 COMP=1.00 SHEAR=1.00 TENS= 1.00

COMPANION LIVE LOAD FACTOR = 0.50

AUTOSOLVE HEELS OFF

TRUSS PLATE MANUFACTURER IS NOT RESPONSIBLE FOR QUALITY CONTROL IN THE TRUSS MANUFACTURING PLANT .

NAIL VALUES

PLATE	GRIP(DRY) (PSI) MAX	MIN	SHEAR (PLI) MAX	MIN	SECTION (PLI) MAX	MIN
MT20	618	354	1667	822	2284	1656

PLATE PLACEMENT TOL. = 0.250 Inches

PLATE ROTATION TOL. = 5.0 Deg.

JSI GRIP= 0.89 (Z) (INPUT = 0.90)
JSI METAL= 0.79 (T) (INPUT = 1.00)

DWG NO. TAM 4574817
STRUCTURAL COMPONENT ONLY

CONTINUED ON PAGE 2

JOB NAME	TRUSS NAME	QUANTITY	PLY	JOB DESC. 42067	DRWG NO.
272821	T8	1	2	TRUSS DESC.	

PLATES (table is in inches)

JT	TYPE	PLATES	W	LEN	Y	X
T	BS-t	MT20	5.0	6.0		
U	BMWWW-t	MT20	5.0	6.0		
V	BS-t	MT20	5.0	6.0		
W	BMWW+t	MT20	4.0	6.0	2.75	1.50
X	BMWW+t	MT20	5.0	8.0	4.00	1.75
Y	BMWW+t	MT20	3.0	6.0		
Z	BMWW-t	MT20	5.0	6.0	2.50	2.00
AA	BMV1+p	MT20	3.0	6.0		

HANGERS NOTES

1) SPECIAL HANGER(S) OR CONNECTION(S) REQUIRED TO SUPPORT CONCENTRATED LOAD(S) 72.2 lbs FACTORED DOWN AT 4-0-12, 62.0 lbs FACTORED DOWN AT 6-0-12, 62.0 lbs FACTORED DOWN AT 8-0-12, 62.0 lbs FACTORED DOWN AT 10-0-12, 62.0 lbs FACTORED DOWN AT 12-0-12, 62.0 lbs FACTORED DOWN AT 14-0-12, 62.0 lbs FACTORED DOWN AT 16-0-12, 62.0 lbs FACTORED DOWN AT 18-0-12, 62.0 lbs FACTORED DOWN AT 18-7-4, 62.0 lbs FACTORED DOWN AT 20-7-4, 62.0 lbs FACTORED DOWN AT 22-7-4, 62.0 lbs FACTORED DOWN AT 24-7-4, AND 62.0 lbs FACTORED DOWN AT 26-7-4, AND 72.2 lbs FACTORED DOWN AT 28-7-4 ON TOP CHORD, AND 379.2 lbs FACTORED DOWN AT 2-0-12, 379.2 lbs FACTORED DOWN AT 4-0-12, 379.2 lbs FACTORED DOWN AT 6-0-12, 379.2 lbs FACTORED DOWN AT 8-0-12, 379.2 lbs FACTORED DOWN AT 10-0-12, 379.2 lbs FACTORED DOWN AT 12-0-12, 379.2 lbs FACTORED DOWN AT 14-0-12, 379.2 lbs FACTORED DOWN AT 16-0-12, 379.2 lbs FACTORED DOWN AT 18-0-12, 379.2 lbs FACTORED DOWN AT 18-7-4, 379.2 lbs FACTORED DOWN AT 20-7-4, 379.2 lbs FACTORED DOWN AT 22-7-4, 379.2 lbs FACTORED DOWN AT 24-7-4, 379.2 lbs FACTORED DOWN AT 26-7-4, AND 379.2 lbs FACTORED DOWN AT 28-7-4, AND 379.2 lbs FACTORED DOWN AT 30-7-4 ON BOTTOM CHORD. DESIGN FOR UNSPECIFIED CONNECTION(S) IS DELEGATED TO THE BUILDING DESIGNER.

LOADING

TOTAL LOAD CASES: (4)

CHORDS

MEMB. FR-TO	MAX. FACTORED FORCE (LBS)	FACTORED VERT. LOAD LC1 (PLF) FROM	TO	MAX CSI (LC)	MAX. UNBRAC LENGTH
U-AT	0 / 10141	-28.0	-28.0	0.90 (1)	10.00
AT-AU	0 / 10141	-28.0	-28.0	0.90 (1)	10.00
AU- T	0 / 10141	-28.0	-28.0	0.90 (1)	10.00
T- S	0 / 10141	-28.0	-28.0	0.90 (1)	10.00
S-AV	0 / 7706	-28.0	-28.0	0.63 (1)	10.00
AV-AW	0 / 7706	-28.0	-28.0	0.63 (1)	10.00
AW- R	0 / 7706	-28.0	-28.0	0.63 (1)	10.00
R-AX	0 / 3955	-28.0	-28.0	0.38 (1)	10.00
AX-AY	0 / 3955	-28.0	-28.0	0.38 (1)	10.00
AY- Q	0 / 3955	-28.0	-28.0	0.38 (1)	10.00
Q- P	0 / 3353	-28.0	-28.0	0.34 (1)	10.00
P- O	0 / 0	-28.0	-28.0	0.01 (3)	10.00

WEBS

MEMB. FR-TO	MAX. FACTORED FORCE (LBS)	MAX CSI (LC)

FACTORED CONCENTRATED LOADS (LBS)

JT	LOC.	LC1	MAX-	MAX+	FACE	DIR.	TYPE
G	16-0-12	-62	-62	---	FRONT	VERT	TOTAL
P	30-7-4	-379	-379	---	FRONT	VERT	TOTAL
T	20-7-4	-379	-379	---	FRONT	VERT	TOTAL
U	16-0-12	-379	-379	---	FRONT	VERT	TOTAL
V	12-0-12	-379	-379	---	FRONT	VERT	TOTAL
Z	2-0-12	-379	-379	---	FRONT	VERT	TOTAL
AB	4-0-12	-72	-72	---	FRONT	VERT	TOTAL
AC	6-0-12	-62	-62	---	FRONT	VERT	TOTAL
AD	8-0-12	-62	-62	---	FRONT	VERT	TOTAL
AE	10-0-12	-62	-62	---	FRONT	VERT	TOTAL
AF	12-0-12	-62	-62	---	FRONT	VERT	TOTAL
AG	14-0-12	-62	-62	---	FRONT	VERT	TOTAL
AH	18-0-12	-62	-62	---	FRONT	VERT	TOTAL
AI	18-7-4	-62	-62	---	FRONT	VERT	TOTAL
AJ	20-7-4	-62	-62	---	FRONT	VERT	TOTAL
AK	22-7-4	-62	-62	---	FRONT	VERT	TOTAL
AL	24-7-4	-62	-62	---	FRONT	VERT	TOTAL
AM	26-7-4	-62	-62	---	FRONT	VERT	TOTAL
AN	28-7-4	-72	-72	---	FRONT	VERT	TOTAL
AO	4-0-12	-379	-379	---	FRONT	VERT	TOTAL
AP	6-0-12	-379	-379	---	FRONT	VERT	TOTAL
AQ	8-0-12	-379	-379	---	FRONT	VERT	TOTAL
AR	10-0-12	-379	-379	---	FRONT	VERT	TOTAL
AS	14-0-12	-379	-379	---	FRONT	VERT	TOTAL
AT	18-0-12	-379	-379	---	FRONT	VERT	TOTAL
AU	18-7-4	-379	-379	---	FRONT	VERT	TOTAL
AV	22-7-4	-379	-379	---	FRONT	VERT	TOTAL
AW	24-7-4	-379	-379	---	FRONT	VERT	TOTAL
AX	26-7-4	-379	-379	---	FRONT	VERT	TOTAL
AY	28-7-4	-379	-379	---	FRONT	VERT	TOTAL

LICENSED PROFESSIONAL ENGINEER
9/11/17
S. KATSOULAKOS
PROVINCE OF ONTARIO

DWG NO. TAM 45748-17
STRUCTURAL
COMPONENT ONLY

JOB NAME	TRUSS NAME	QUANTITY	PLY	JOB DESC. 42067	DRWG NO.
272821	T8Z	1	2	TRUSS DESC.	

Tamarack Roof Truss, Burlington

Version 8.030 S Oct 5 2016 MiTek Industries, Inc. Mon Sep 11 07:44:05 2017 Page 1

ID:VZPLc5c1tt2s2iP8vPCsK7y77Bn-mm6_nib3udjlBMRaywLfvgW6l3HtBwhIU5?O?byenTu

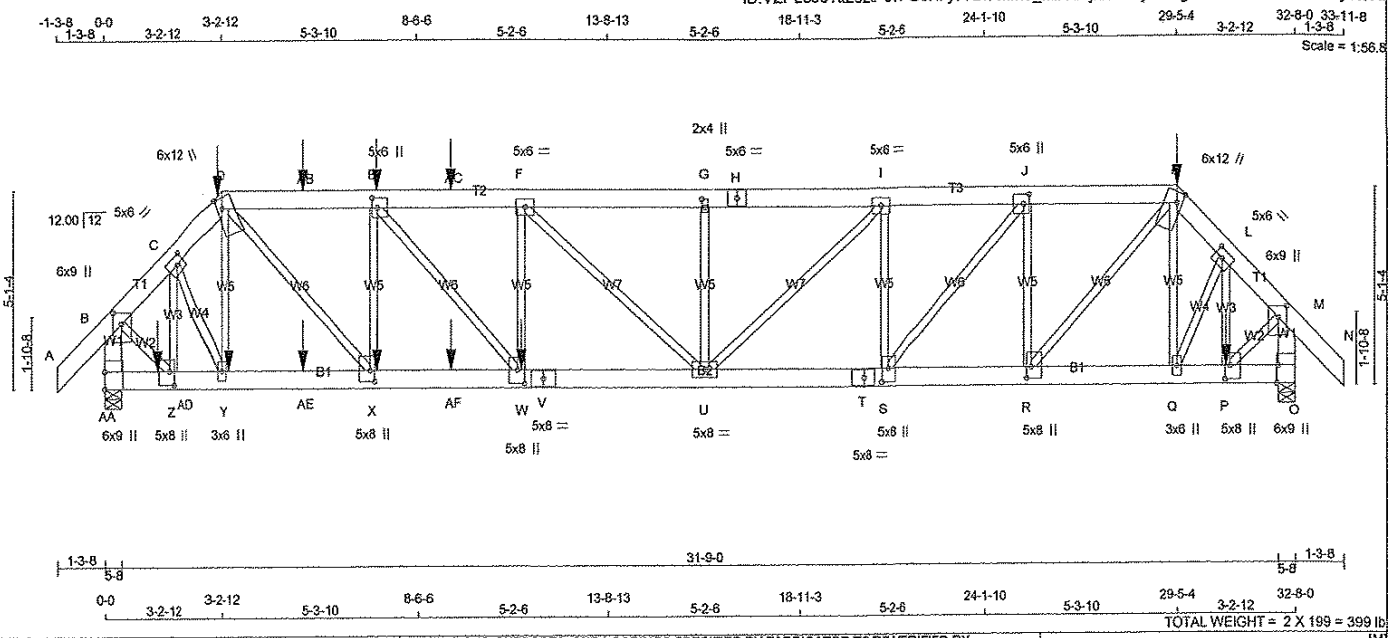

TOTAL WEIGHT = 2 X 199 = 399 lb

[M]

LUMBER

N. L. G. A. RULES

CHORDS	SIZE		LUMBER	DESCR.
A - D	2x6	DRY	No.2	SPF
D - H	2x6	DRY	No.2	SPF
H - K	2x6	DRY	No.2	SPF
K - N	2x6	DRY	No.2	SPF
AA- B	2x6	DRY	No.2	SPF
O - M	2x6	DRY	No.2	SPF
AA- V	2x6	DRY	No.2	SPF
V - T	2x6	DRY	No.2	SPF
T - O	2x6	DRY	No.2	SPF
ALL WEBS EXCEPT	2x3	DRY	No.2	SPF

DRY: SEASONED LUMBER

DESIGN CONSISTS OF 2 TRUSSES BUILT SEPARATELY THEN FASTENED TOGETHER AS FOLLOWS:

CHORDS	#ROWS	SURFACE SPACING (IN)	LOAD(PLF)
TOP CHORDS : (0.122"X3") SPIRAL NAILS			
A- D	2	12	SIDE(122.0)
D- H	2	12	SIDE(183.1)
H- K	2	12	SIDE(61.0)
K- N	2	12	SIDE(122.0)
AA- B	2	12	TOP
O- M	2	12	TOP
BOTTOM CHORDS : (0.122"X3") SPIRAL NAILS			
AA- V	2	7	SIDE(366.2)
V- T	2	7	SIDE(61.0)
T- O	2	7	SIDE(366.2)
WEBS : (0.122"X3") SPIRAL NAILS			
2x3	1	6	
F- W	1	3	SIDE(569.7)
L- P	1	2	SIDE(676.2)
I- S	1	3	
C- Z	1	2	

NAILS TO BE DRIVEN FROM ONE SIDE ONLY.

GIRDER NAILING ASSUMES NAILED HANGERS ARE FASTENED WITH MIN. 3-0 INCH NAILS.

TOP - COMPONENTS ARE LOADED FROM THE TOP AND MUST BE PLACED ON TOP EDGE OF ALL PLIES FOR THE LOAD TO BE TRANSFERRED TO EACH PLY.

SIDE - PLF SHOWN IS THE EQUIVALENT UDL APPLIED TO ONE SIDE THAT THE CORRESPONDING NAILING PATTERN SHALL BE CAPABLE OF TRANSFERING. REMAINING PLF MUST BE APPLIED ON THE OPPOSITE SIDE OR ON THE TOP.

PLATES (table is in inches)

JT	TYPE	PLATES	W	LEN	Y	X
B	TMWW+p	MT20	6.0	9.0	3.50	2.75
C	TMWW-t	MT20	5.0	6.0	2.50	2.75
D	TTWW+m	MT20	6.0	12.0	3.25	1.75
E	TMWW+t	MT20	5.0	6.0	3.00	1.75
F	TMWW-t	MT20	5.0	6.0		
G	TMW+w	MT20	2.0	4.0	2.50	1.00
H	TS-t	MT20	5.0	6.0		
I	TMWW-t	MT20	5.0	6.0		
J	TMWW+t	MT20	5.0	6.0	3.00	1.75
K	TTWW+m	MT20	6.0	12.0	3.25	1.75
L	TMWW-t	MT20	5.0	6.0	2.50	2.75
M	TMWW+p	MT20	6.0	9.0	3.50	2.75
O	BMV1+t	MT20	6.0	9.0	Edge	0.50

DIMENSIONS, SUPPORTS AND LOADINGS SPECIFIED BY FABRICATOR TO BE VERIFIED BY BUILDING DESIGNER

BEARINGS

JT	FACTORED GROSS REACTION VERT	HORZ	MAXIMUM GROSS REACTION DOWN	HORZ	FACTORED UPLIFT	INPUT BRG IN-SX	REQRD BRG IN-SX
AA	7414	0	7414	0	0	5-8	5-8
O	8439	0	8439	0	0	5-8	5-8

UNFACTORED REACTIONS

JT	1ST LCASE COMBINED	MAX./MIN. COMPONENT REACTIONS SNOW	LIVE	PERM.LIVE	WIND	DEAD	SOIL
AA	5710	3869 / 0	921 / 0	0 / 0	0 / 0	920 / 0	0 / 0
O	6479	4427 / 0	1023 / 0	0 / 0	0 / 0	1029 / 0	0 / 0

BEARING MATERIAL TO BE SPF NO.2 OR BETTER AT JOINT(S) AA, O

BRACING

TOP CHORD TO BE SHEATHED OR MAX. PURLIN SPACING = 3.33 FT.
MAX. UNBRACED BOTTOM CHORD LENGTH = 10.00 FT. OR RIGID CEILING DIRECTLY APPLIED.

ALL PITCH BREAKS AND PERIMETER CORNER JOINTS MUST BE LATERALLY RESTRAINED.

LOADING

TOTAL LOAD CASES: (4)

CHORDS

MEMB.	MAX. FACTORED FORCE (LBS)	FACTORED VERT. LOAD (PLF) FROM	TO	LC1	MAX CSI (LC)	MAX. UNBRAC LENGTH
FR-TO						
A- B	0 / 63	-122.2	-122.2	0.05 (1)	10.00	
B- C	-5844 / 0	-122.2	-122.2	0.09 (1)	4.83	
C- D	-6899 / 0	-122.2	-122.2	0.08 (1)	4.52	
D-AB	-9182 / 0	-122.2	-122.2	0.25 (1)	3.87	
AB- E	-9182 / 0	-122.2	-122.2	0.25 (1)	3.87	
E-AC	-12091 / 0	-122.2	-122.2	0.35 (1)	3.33	
AC- F	-12091 / 0	-122.2	-122.2	0.35 (1)	3.33	
F- G	-11088 / 0	-122.2	-122.2	0.33 (1)	3.50	
G- H	-11088 / 0	-122.2	-122.2	0.31 (1)	3.52	
H- I	-11088 / 0	-122.2	-122.2	0.31 (1)	3.52	
I- J	-9192 / 0	-122.2	-122.2	0.20 (1)	3.92	
J- K	-7102 / 0	-122.2	-122.2	0.16 (1)	4.41	
K- L	-6264 / 0	-122.2	-122.2	0.15 (1)	4.63	
L- M	-6501 / 0	-122.2	-122.2	0.16 (1)	4.55	
M- N	0 / 63	-122.2	-122.2	0.05 (1)	10.00	
AA- B	-7353 / 0	0.0	0.0	0.27 (1)	5.52	
O- M	-8162 / 0	0.0	0.0	0.30 (1)	5.26	
AA-AD	0 / 0	-28.0	-28.0	0.04 (1)	10.00	
AD- Z	0 / 0	-28.0	-28.0	0.04 (1)	10.00	
Z- Y	0 / 4082	-28.0	-28.0	0.34 (1)	10.00	
Y-AE	0 / 4796	-28.0	-28.0	0.39 (1)	10.00	
AE- X	0 / 4796	-28.0	-28.0	0.39 (1)	10.00	
X-AF	0 / 9182	-28.0	-28.0	0.75 (1)	10.00	
AF- W	0 / 9182	-28.0	-28.0	0.75 (1)	10.00	
W- V	0 / 12091	-28.0	-28.0	0.86 (1)	10.00	
V- U	0 / 12091	-28.0	-28.0	0.86 (1)	10.00	
U- T	0 / 9192	-28.0	-28.0	0.64 (1)	10.00	
T- S	0 / 9192	-28.0	-28.0	0.64 (1)	10.00	
S- R	0 / 7102	-28.0	-28.0	0.50 (1)	10.00	
R- Q	0 / 4471	-28.0	-28.0	0.36 (1)	10.00	
Q- P	0 / 4488	-28.0	-28.0	0.46 (1)	10.00	
P- O	0 / 0	-28.0	-28.0	0.17 (1)	10.00	

WEBS

MEMB.	MAX. FACTORED FORCE (LBS)	MAX CSI (LC)
FR-TO		
Y- D	-896 / 0	0.16 (1)
D- X	0 / 6568	0.81 (1)
X- E	-3914 / 0	0.68 (1)
E- W	0 / 4445	0.55 (1)
W- F	0 / 414	0.05 (1)
S- I	-2300 / 0	0.40 (1)
S- J	0 / 3194	0.40 (1)
R- J	-2669 / 0	0.50 (1)
R- K	0 / 3940	0.49 (1)
Q- K	0 / 656	0.08 (1)
C- Y	0 / 1771	0.22 (1)
Q- L	-78 / 0	0.01 (1)
U- G	-662 / 0	0.12 (1)
F- U	-1374 / 0	0.57 (1)
U- I	0 / 2598	0.32 (1)
P- L	0 / 175	0.02 (1)
Z- C	-2564 / 0	0.27 (1)
B- Z	0 / 4994	0.62 (1)
P- M	0 / 5491	0.68 (1)

FACTORED CONCENTRATED LOADS (LBS)

JT	LOC.	LC1	MAX-	MAX+	FACE	DIR.	TYPE
D	3-2-12	-26	-29	---	FRONT	VERT	DEAD
D	3-2-12	-65	-65	---	BACK	VERT	TOTAL
D	3-2-12	-404	-404	---	FRONT	VERT	SNOW
E	7-5-4	-62	-62	---	BACK	VERT	TOTAL

DESIGN CRITERIA

*** SPECIAL LOADS ANALYSIS ***
GEOMETRY AND/OR BASIC LOADS CHANGED BY USER.
LOADS WERE DERIVED FROM USER INPUT
NO FURTHER MODIFICATIONS WERE MADE

SPECIFIED LOADS:

TOP CH.	LL	=	38.3	PSF
	DL	=	3.0	PSF
BOT CH.	LL	=	10.5	PSF
	DL	=	7.0	PSF
TOTAL LOAD		=	58.7	PSF

SPACING = 24.0 IN. C/C

LOADING IN FLAT SECTION BASED ON A SLOPE OF 6.00/12

*** NON STANDARD GIRDER ***
ADDT'L USER-DEFINED LOADS APPLIED TO ALL LOAD CASES.

THIS TRUSS IS DESIGNED FOR RESIDENTIAL OR SMALL BUILDING REQUIREMENTS OF PART 9, NBCC 2010

THIS DESIGN COMPLIES WITH:
- PART 9 OF OBC 2012 , BCBC 2012 , ABC 2014
- CSA 086-09
- TPIC 2011

DESIGN ASSUMPTIONS
-OVERHANG NOT TO BE ALTERED OR CUT OFF.

(55 % OF 54.4 P.S.F. G.S.L. PLUS 8.4 P.S.F. RAIN LOAD) EQUALS 38.3 P.S.F. SPECIFIED ROOF LIVE LOAD

ALLOWABLE DEFL.(LL)= L/360 (1.09")
CALCULATED VERT. DEFL.(LL) = L/ 999 (0.26")
ALLOWABLE DEFL.(TL)= L/360 (1.09")
CALCULATED VERT. DEFL.(TL) = L/ 985 (0.40")

CSI: TC=0.35 (E-F:1) , BC=0.86 (U-W:1) , WB=0.81 (D-X:1) , SSI=0.16 (P-Q:1)

DOL LUMBER=1.00 NAIL=1.00 LS BEND=1.00 COMP=1.00 SHEAR=1.00 TENS= 1.00

COMPANION LIVE LOAD FACTOR = 0.50

AUTOSOLVE HEELS OFF

TRUSS PLATE MANUFACTURER IS NOT RESPONSIBLE FOR QUALITY CONTROL IN THE TRUSS MANUFACTURING PLANT .

NAIL VALUES

PLATE	GRIP(DRY) (PSI) MAX	MIN	SHEAR (PLI) MAX	MIN	SECTION (PLI) MAX	MIN
MT20	618	354	1667	822	2284	1656

PLATE PLACEMENT TOL. = 0.250 inches
PLATE ROTATION TOL. = 5.0 Deg.

LICENSED PROFESSIONAL ENGINEER
9/17
S. KATSOULAKOS
PROVINCE OF ONTARIO

DWG NO. TAM 45749 - 17
STRUCTURAL COMPONENT ONLY

CONTINUED ON PAGE 2

JOB NAME	TRUSS NAME	QUANTITY	PLY	JOB DESC. 42067	DRWG NO.
272821	T8Z	1	2	TRUSS DESC.	

PLATES (table is in inches)

JT	TYPE	PLATES	W	LEN	Y	X
P	BMWW+t	MT20	5.0	8.0	4.25	1.50
Q	BMWW+t	MT20	3.0	6.0		
R	BMWW+t	MT20	5.0	8.0	3.50	1.50
S	BMWW+t	MT20	5.0	8.0	4.25	2.25
T	BS-t	MT20	5.0	8.0		
U	BMWWW-t	MT20	5.0	8.0		
V	BS-t	MT20	5.0	8.0		
W	BMWW+t	MT20	5.0	8.0	4.25	2.25
X	BMWW+t	MT20	5.0	8.0	3.50	1.50
Y	BMWW+t	MT20	3.0	6.0		
Z	BMWW+t	MT20	5.0	8.0	4.25	1.50
AA	BMV1+t	MT20	6.0	9.0	5.50	

Edge - INDICATES REFERENCE CORNER OF PLATE TOUCHES EDGE OF CHORD.

HANGERS NOTES

1) SPECIAL HANGER(S) OR CONNECTION(S) REQUIRED TO SUPPORT CONCENTRATED LOAD(S) 429.8 lbs FACTORED DOWN AT 29-5-4, 429.8 lbs FACTORED DOWN AT 3-2-12, 65.0 lbs FACTORED DOWN AT 3-2-12, 62.0 lbs FACTORED DOWN AT 5-5-4, AND 62.0 lbs FACTORED DOWN AT 7-5-4, AND 62.0 lbs FACTORED DOWN AT 9-5-4 ON TOP CHORD, AND 379.2 lbs FACTORED DOWN AT 1-5-4, 379.2 lbs FACTORED DOWN AT 3-5-4, 379.2 lbs FACTORED DOWN AT 5-5-4, 379.2 lbs FACTORED DOWN AT 7-5-4, 379.2 lbs FACTORED DOWN AT 9-5-4, AND 3587.5 lbs FACTORED DOWN AT 11-4-8, AND 3995.8 lbs FACTORED DOWN AT 30-9-8 ON BOTTOM CHORD. DESIGN FOR UNSPECIFIED CONNECTION(S) IS DELEGATED TO THE BUILDING DESIGNER.

FACTORED CONCENTRATED LOADS (LBS)

JT	LOC.	LC1	MAX-	MAX+	FACE	DIR.	TYPE
K	29-5-4	-26	-29	---	FRONT	VERT	DEAD
K	29-5-4	-404	-404	---	FRONT	VERT	SNOW
P	30-9-8	-3996	-3996	---	BACK	VERT	TOTAL
W	11-4-8	-3587	-3587	---	BACK	VERT	TOTAL
X	7-5-4	-379	-379	---	BACK	VERT	TOTAL
Y	3-5-4	-379	-379	---	BACK	VERT	TOTAL
AB	5-5-4	-62	-62	---	BACK	VERT	TOTAL
AC	9-5-4	-62	-62	---	BACK	VERT	TOTAL
AD	1-5-4	-379	-379	---	BACK	VERT	TOTAL
AE	5-5-4	-379	-379	---	BACK	VERT	TOTAL
AF	9-5-4	-379	-379	---	BACK	VERT	TOTAL

JSI GRIP= 0.88 (R) (INPUT = 0.90)
JSI METAL= 0.98 (V) (INPUT = 1.00)

LICENSED PROFESSIONAL ENGINEER
9/11/17
S. KATSOULAKOS
PROVINCE OF ONTARIO

DWG NO. TAM45749-17
STRUCTURAL
COMPONENT ONLY

JOB NAME	TRUSS NAME	QUANTITY	PLY	JOB DESC. 42067	DRWG NO.
272821	T9	1	1	TRUSS DESC.	

Tamarack Roof Truss, Burlington

Version 8.030 S Oct 5 2016 MiTek Industries, Inc. Mon Sep 11 07:44:06 2017 Page 1

ID:VZPLc5c1tt2s2iP8vPCsK7y77Bn-EzgM_1chexrcpV0mWesuSu2EITkYwUrSjlkxX1yenTt

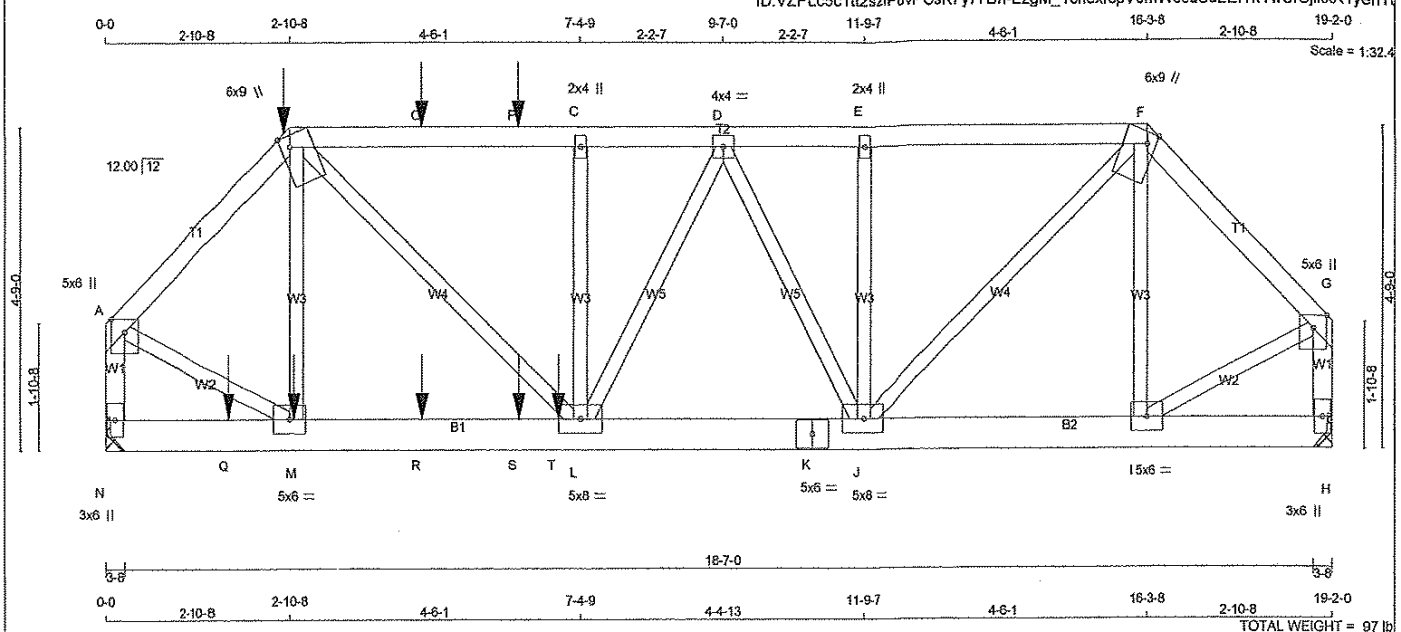

LUMBER

N. L. G. A. RULES

CHORDS	SIZE		LUMBER	DESCR.
A - B	2x4	DRY	No.2	SPF
B - F	2x4	DRY	No.2	SPF
F - G	2x4	DRY	No.2	SPF
N - A	2x4	DRY	No.2	SPF
H - G	2x4	DRY	No.2	SPF
N - K	2x6	DRY	No.2	SPF
K - H	2x6	DRY	No.2	SPF
ALL WEBS EXCEPT	2x3	DRY	No.2	SPF

DRY: SEASONED LUMBER.

PLATES (table is in inches)

JT	TYPE	PLATES	W	LEN	Y	X
A	TMVW+p	MT20	5.0	6.0	2.25	2.50
B	TTWW+m	MT20	6.0	9.0	Edge	1.75
C	TMW+w	MT20	2.0	4.0		
D	TMWW-t	MT20	4.0	4.0		
E	TMW+w	MT20	2.0	4.0		
F	TTWW+m	MT20	6.0	9.0	Edge	1.75
G	TMVW+p	MT20	5.0	6.0	2.25	2.50
H	BMV1+p	MT20	3.0	6.0		
I	BMWW-t	MT20	5.0	6.0		
J	BMWWW-t	MT20	5.0	8.0		
K	BS-t	MT20	5.0	6.0		
L	BMWWW-t	MT20	5.0	8.0		
M	BMWW-t	MT20	5.0	6.0		
N	BMV1+p	MT20	3.0	6.0		

Edge - INDICATES REFERENCE CORNER OF PLATE TOUCHES EDGE OF CHORD.

HANGERS NOTES

1) SPECIAL HANGER(S) OR CONNECTION(S) REQUIRED TO SUPPORT CONCENTRATED LOAD(S) 112.3 lbs FACTORED DOWN AND 199.8 lbs FACTORED UP AT 2-10-8, AND 53.5 lbs FACTORED DOWN AT 4-11-4, AND 53.5 lbs FACTORED DOWN AT 6-5-4 ON TOP CHORD, AND 16.0 lbs FACTORED DOWN AND 1.0 lbs FACTORED UP AT 1-11-4, 21.4 lbs FACTORED DOWN AT 2-11-4, 21.4 lbs FACTORED DOWN AT 4-11-4, AND 21.4 lbs FACTORED DOWN AT 6-5-4, AND 573.9 lbs FACTORED DOWN AT 7-0-8 ON BOTTOM CHORD. DESIGN FOR UNSPECIFIED CONNECTION(S) IS DELEGATED TO THE BUILDING DESIGNER.

DIMENSIONS, SUPPORTS AND LOADINGS SPECIFIED BY FABRICATOR TO BE VERIFIED BY BUILDING DESIGNER

BEARINGS

JT	FACTORED GROSS REACTION VERT	HORZ	MAXIMUM FACTORED GROSS REACTION DOWN	HORZ	UPLIFT	INPUT BRG IN-SX	REQRD BRG IN-SX
N	2000	0	2000	0	0	HANGER BY OTHERS MIN. SEAT SIZE: 3-8	
H	1708	0	1708	0	0	HANGER BY OTHERS MIN. SEAT SIZE: 3-8	

UNFACTORED REACTIONS

JT	1ST LCASE COMBINED	SNOW	MAX./MIN. COMPONENT REACTIONS LIVE	PERM.LIVE	WIND	DEAD	SOIL
N	1554	1029 / 0	266 / 0	0 / 0	0 / 0	259 / 0	0 / 0
H	1329	877 / 0	230 / 0	0 / 0	0 / 0	222 / 0	0 / 0

BRACING

TOP CHORD TO BE SHEATHED OR MAX. PURLIN SPACING = 3.88 FT.
MAX. UNBRACED BOTTOM CHORD LENGTH = 10.00 FT. OR RIGID CEILING DIRECTLY APPLIED.

ALL PITCH BREAKS AND PERIMETER CORNER JOINTS MUST BE LATERALLY RESTRAINED.

LOADING

TOTAL LOAD CASES: (7)

CHORDS

MEMB.	MAX. FACTORED FORCE (LBS)	FACTORED VERT. LOAD (PLF) FROM	TO	LC1	MAX CSI (LC)
A- B	-1730 / 0	-122.2	-122.2	0.24 (1)	
B- O	-2286 / 0	-122.2	-122.2	0.53 (1)	
O- P	-2286 / 0	-122.2	-122.2	0.53 (1)	
P- C	-2286 / 0	-122.2	-122.2	0.53 (1)	
C- D	-2286 / 0	-122.2	-122.2	0.46 (1)	
D- E	-1989 / 0	-122.2	-122.2	0.37 (1)	
E- F	-1989 / 0	-122.2	-122.2	0.41 (1)	
F- G	-1439 / 0	-122.2	-122.2	0.23 (1)	
N- A	-1993 / 0	0.0	0.0	0.23 (1)	
H- G	-1687 / 0	0.0	0.0	0.20 (1)	
N- Q	0 / 0	-28.0	-28.0	0.08 (2)	
Q- M	0 / 0	-28.0	-28.0	0.08 (2)	
M- R	0 / 1208	-28.0	-28.0	0.27 (1)	
R- S	0 / 1208	-28.0	-28.0	0.27 (1)	
S- T	0 / 1208	-28.0	-28.0	0.27 (1)	
T- L	0 / 1208	-28.0	-28.0	0.27 (1)	
L- K	0 / 2144	-28.0	-28.0	0.32 (1)	
K- J	0 / 2144	-28.0	-28.0	0.32 (1)	
J- I	0 / 1004	-28.0	-28.0	0.18 (1)	
I- H	0 / 0	-28.0	-28.0	0.08 (2)	

WEBS

MEMB.	MAX. FACTORED FORCE (LBS)	MAX CSI (LC)
M- B	-373 / 58	0.12 (1)
B- L	0 / 1498	0.37 (1)
L- C	-649 / 0	0.21 (1)
J- E	-556 / 0	0.18 (1)
J- F	0 / 1369	0.34 (1)
I- F	-345 / 37	0.11 (1)
A- M	0 / 1351	0.33 (1)
I- G	0 / 1124	0.28 (1)
L- D	-18 / 316	0.08 (1)
D- J	-344 / 0	0.14 (1)

MAX. UNBRAC LENGTH FR-TO
4.79
3.88
3.88
3.88
3.92
4.31
4.31
5.16
5.92
6.35
10.00
10.00
10.00
10.00
10.00
10.00
10.00
10.00
10.00
10.00

FACTORED CONCENTRATED LOADS (LBS)

JT	LOC.	LC1	MAX-	MAX+	FACE	DIR.	TYPE
B	2-10-8	-112	-112	207	BACK	VERT	TOTAL
M	2-11-4	-12	-21	---	BACK	VERT	TOTAL
O	4-11-4	-53	-53	---	BACK	VERT	TOTAL
P	6-5-4	-53	-53	---	BACK	VERT	TOTAL
Q	1-11-4	1	-16	1	BACK	VERT	TOTAL
R	4-11-4	-12	-21	---	BACK	VERT	TOTAL
S	6-5-4	-12	-21	---	BACK	VERT	TOTAL
T	7-0-8	-574	-574	---	BACK	VERT	TOTAL

DESIGN CRITERIA [M]

SPECIFIED LOADS:

TOP CH.	LL	=	38.3	PSF
	DL	=	3.0	PSF
BOT CH.	LL	=	10.5	PSF
	DL	=	7.0	PSF
TOTAL LOAD		=	58.7	PSF

SPACING = 24.0 IN. C/C

LOADING IN FLAT SECTION BASED ON A SLOPE OF 6.00/12

THIS TRUSS IS DESIGNED FOR RESIDENTIAL OR SMALL BUILDING REQUIREMENTS OF PART 9, NBCC 2010

THIS DESIGN COMPLIES WITH:
- PART 9 OF OBC 2012 , BCBC 2012 , ABC 2014
- CSA 086-09
- TPIC 2011

(55 % OF 54.4 P.S.F. G.S.L. PLUS 8.4 P.S.F. RAIN LOAD) EQUALS 38.3 P.S.F. SPECIFIED ROOF LIVE LOAD

ALLOWABLE DEFL.(LL)= L/360 (0.64")
CALCULATED VERT. DEFL.(LL) = L/ 999 (0.06")
ALLOWABLE DEFL.(TL)= L/360 (0.64")
CALCULATED VERT. DEFL.(TL) = L/ 999 (0.10")

CSI: TC=0.53 (B-C:1) , BC=0.32 (J-L:1) , WB=0.37 (B-L:1) , SSI=0.39 (L-M:1)

DOL LUMBER=1.00 NAIL=1.00 LS BEND=1.00 COMP=1.00 SHEAR=1.00 TENS= 1.00

COMPANION LIVE LOAD FACTOR = 0.50

TRUSS PLATE MANUFACTURER IS NOT RESPONSIBLE FOR QUALITY CONTROL IN THE TRUSS MANUFACTURING PLANT .

NAIL VALUES

PLATE	GRIP(DRY) (PSI) MAX	MIN	SHEAR (PLI) MAX	MIN	SECTION (PLI) MAX	MIN
MT20	618	354	1667	822	2284	1656

PLATE PLACEMENT TOL. = 0.250 inches

PLATE ROTATION TOL. = 5.0 Deg.

JSI GRIP= 0.90 (A) (INPUT = 0.90)
JSI METAL= 0.35 (K) (INPUT = 1.00)

LICENSED PROFESSIONAL ENGINEER
9/11/17
S. KATSOULAKOS
PROVINCE OF ONTARIO

DWG NO. TAM 45750-17
STRUCTURAL
COMPONENT ONLY

JOB NAME	TRUSS NAME	QUANTITY	PLY	JOB DESC. 42067	DRWG NO.
272821	T10	1	1	TRUSS DESC.	

Tamarack Roof Truss, Burlington

Version 8.030 S Oct 5 2016 MiTek Industries, Inc. Mon Sep 11 07:44:06 2017 Page 1

ID:VZPLc5c1tt2s2iP8vPCsK7y77Bn-EzgM_1chexrcpV0mWesuSu2GHTmgwRLSjlkxX1yenTt

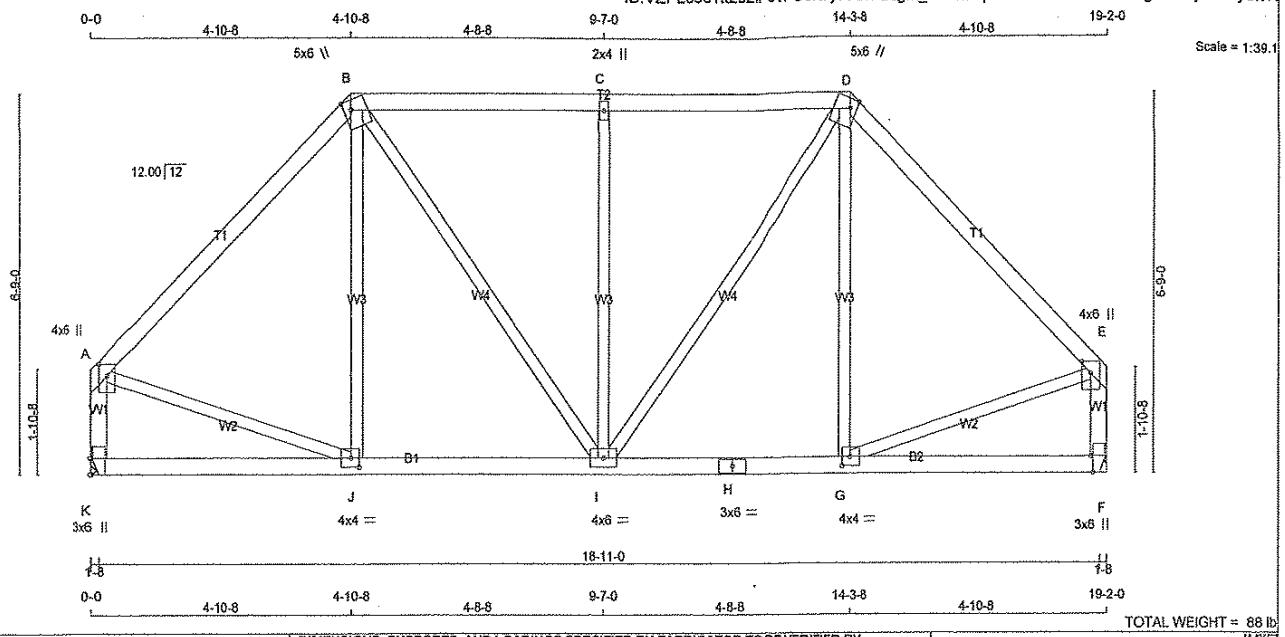

TOTAL WEIGHT = 88 lb

[M][F]

LUMBER

N. L. G. A. RULES

CHORDS	SIZE		LUMBER	DESCR.
A - B	2x4	DRY	No.2	SPF
B - D	2x4	DRY	No.2	SPF
D - E	2x4	DRY	No.2	SPF
K - A	2x4	DRY	No.2	SPF
F - E	2x4	DRY	No.2	SPF
K - H	2x4	DRY	No.2	SPF
H - F	2x4	DRY	No.2	SPF
ALL WEBS EXCEPT	2x3	DRY	No.2	SPF

DRY: SEASONED LUMBER.

PLATES (table is in inches)

JT	TYPE	PLATES	W	LEN	Y	X
A	TMWW+p	MT20	4.0	6.0	2.50	2.00
B	TTWW+m	MT20	5.0	6.0	2.00	1.50
C	TMW+w	MT20	2.0	4.0		
D	TTWW+m	MT20	5.0	6.0	2.00	1.50
E	TMWW+p	MT20	4.0	6.0	2.50	2.00
F	BMV1+t	MT20	3.0	6.0	Edge	0.50
G	BMWW-t	MT20	4.0	4.0	2.00	1.75
H	BS-t	MT20	3.0	6.0		
I	BMWWW-t	MT20	4.0	6.0		
J	BMWW-t	MT20	4.0	4.0	2.00	1.75
K	BMV1+t	MT20	3.0	6.0	3.50	

Edge - INDICATES REFERENCE CORNER OF PLATE TOUCHES EDGE OF CHORD.

DIMENSIONS, SUPPORTS AND LOADINGS SPECIFIED BY FABRICATOR TO BE VERIFIED BY BUILDING DESIGNER

BEARINGS

JT	FACTORED GROSS REACTION VERT	HORZ	MAXIMUM FACTORED GROSS REACTION DOWN	HORZ	UPLIFT	INPUT BRG IN-SX	REQRD BRG IN-SX
K	1440	0	1440	0	0	HANGER BY OTHERS MIN. SEAT SIZE: 1-8	
F	1440	0	1440	0	0	HANGER BY OTHERS MIN. SEAT SIZE: 1-8	

UNFACTORED REACTIONS

JT	1ST LCASE COMBINED	MAX./MIN. COMPONENT REACTIONS SNOW	LIVE	PERM.LIVE	WIND	DEAD	SOIL
K	1126	733 / 0	201 / 0	0 / 0	0 / 0	192 / 0	0 / 0
F	1126	733 / 0	201 / 0	0 / 0	0 / 0	192 / 0	0 / 0

BRACING

TOP CHORD TO BE SHEATHED OR MAX. PURLIN SPACING = 5.40 FT.
MAX. UNBRACED BOTTOM CHORD LENGTH = 10.00 FT. OR RIGID CEILING DIRECTLY APPLIED.

ALL PITCH BREAKS AND PERIMETER CORNER JOINTS MUST BE LATERALLY RESTRAINED.

LOADING

TOTAL LOAD CASES: (4)

CHORDS

MEMB. FR-TO	MAX. FACTORED FORCE (LBS)	FACTORED VERT. LOAD LC1 (PLF) FROM	TO	MAX CSI (LC)	MAX. UNBRAC LENGTH
A- B	-1174 / 0	-122.2	-122.2	0.40 (1)	5.40
B- C	-1122 / 0	-122.2	-122.2	0.35 (1)	5.54
C- D	-1122 / 0	-122.2	-122.2	0.35 (1)	5.54
D- E	-1174 / 0	-122.2	-122.2	0.40 (1)	5.40
K- A	-1384 / 0	0.0	0.0	0.15 (1)	6.91
F- E	-1384 / 0	0.0	0.0	0.15 (1)	6.91
K- J	0 / 0	-28.0	-28.0	0.17 (2)	10.00
J- I	0 / 826	-28.0	-28.0	0.25 (2)	10.00
I- H	0 / 826	-28.0	-28.0	0.25 (2)	10.00
H- G	0 / 826	-28.0	-28.0	0.25 (2)	10.00
G- F	0 / 0	-28.0	-28.0	0.17 (2)	10.00

WEBS

MEMB. FR-TO	MAX. FACTORED FORCE (LBS)	MAX CSI (LC)
J- B	-96 / 172	0.07 (1)
B- I	0 / 501	0.11 (1)
I- C	-698 / 0	0.53 (1)
I- D	0 / 501	0.11 (1)
G- D	-96 / 172	0.07 (1)
A- J	0 / 865	0.19 (1)
G- E	0 / 865	0.19 (1)

DESIGN CRITERIA

SPECIFIED LOADS:

TOP CH.	LL	=	38.3	PSF
	DL	=	3.0	PSF
BOT CH.	LL	=	10.5	PSF
	DL	=	7.0	PSF
TOTAL LOAD		=	58.7	PSF

SPACING = 24.0 IN. C/C

LOADING IN FLAT SECTION BASED ON A SLOPE OF 6.00/12

THIS TRUSS IS DESIGNED FOR RESIDENTIAL OR SMALL BUILDING REQUIREMENTS OF PART 9, NBCC 2010

THIS DESIGN COMPLIES WITH:
- PART 9 OF OBC 2012 , BCBC 2012 , ABC 2014
- CSA 086-09
- TPIC 2011

(55 % OF 54.4 P.S.F. G.S.L. PLUS 8.4 P.S.F. RAIN LOAD) EQUALS 38.3 P.S.F. SPECIFIED ROOF LIVE LOAD

ALLOWABLE DEFL.(LL)= L/360 (0.64")
CALCULATED VERT. DEFL.(LL) = L/ 999 (0.03")
ALLOWABLE DEFL.(TL)= L/360 (0.64")
CALCULATED VERT. DEFL.(TL) = L/ 999 (0.05")

CSI: TC=0.40 (D-E:1) , BC=0.25 (G-I:2) , WB=0.53 (C-I:1) , SSI=0.28 (B-C:1)

DOL LUMBER=1.00 NAIL=1.00 LS BEND=1.10 COMP=1.10 SHEAR=1.10 TENS= 1.10

COMPANION LIVE LOAD FACTOR = 0.50

TRUSS PLATE MANUFACTURER IS NOT RESPONSIBLE FOR QUALITY CONTROL IN THE TRUSS MANUFACTURING PLANT .

NAIL VALUES

PLATE	GRIP(DRY) (PSI) MAX	MIN	SHEAR (PLI) MAX	MIN	SECTION (PLI) MAX	MIN
MT20	618	354	1657	622	2284	1656

PLATE PLACEMENT TOL. = 0.250 inches

PLATE ROTATION TOL. = 5.0 Deg.

JSI GRIP= 0.89 (J) (INPUT = 0.90)
JSI METAL= 0.31 (J) (INPUT = 1.00)

LICENSED PROFESSIONAL ENGINEER
9167
S. KATSOULAKOS
PROVINCE OF ONTARIO

DWG NO. TAM-4575 / -17
STRUCTURAL
COMPONENT ONLY

JOB NAME	TRUSS NAME	QUANTITY	PLY	JOB DESC. 42067	DRWG NO.
272821	T11	1	1	TRUSS DESC.	

Tamarack Roof Truss, Burlington

Version 8.030 S Oct 5 2016 MiTek Industries, Inc. Mon Sep 11 07:44:06 2017 Page 1

ID:VZPLc5c1tt2s2iP8vPCsK7y77Bn-EzgM_1chexrcpV0mWesuSu2FGTkwwMmSjlkxX1yenTt

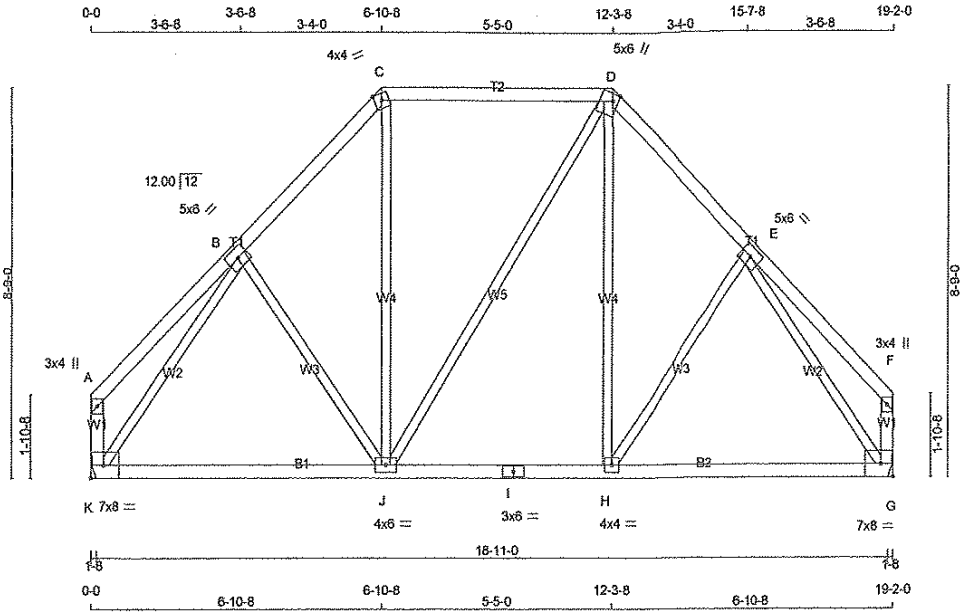

TOTAL WEIGHT = 94 lb.

(M)(F)

LUMBER

N. L. G. A. RULES

CHORDS	SIZE		LUMBER	DESCR.
A - C	2x4	DRY	No.2	SPF
C - D	2x4	DRY	No.2	SPF
D - F	2x4	DRY	No.2	SPF
K - A	2x4	DRY	No.2	SPF
G - F	2x4	DRY	No.2	SPF
K - I	2x4	DRY	No.2	SPF
I - G	2x4	DRY	No.2	SPF
ALL WEBS EXCEPT	2x3	DRY	No.2	SPF

DRY: SEASONED LUMBER.

PLATES (table is in inches)

JT	TYPE	PLATES	W	LEN	Y	X
A	TMV+p	MT20	3.0	4.0		
B	TMWW-t	MT20	5.0	6.0		
C	TTW-m	MT20	4.0	4.0	Edge	
D	TTWW+m	MT20	5.0	6.0	2.00	1.50
E	TMWW-t	MT20	5.0	6.0		
F	TMV+p	MT20	3.0	4.0		
G	BMVW1-t	MT20	7.0	8.0		Edge
H	BMWW-t	MT20	4.0	4.0		
I	BS-t	MT20	3.0	6.0		
J	BMWWW-t	MT20	4.0	6.0		
K	BMVW1-t	MT20	7.0	8.0		Edge

Edge - INDICATES REFERENCE CORNER OF PLATE TOUCHES EDGE OF CHORD.

DIMENSIONS, SUPPORTS AND LOADINGS SPECIFIED BY FABRICATOR TO BE VERIFIED BY BUILDING DESIGNER

BEARINGS

JT	FACTORED GROSS REACTION VERT	HORZ	MAXIMUM FACTORED GROSS REACTION DOWN	HORZ	UPLIFT	INPUT BRG IN-SX	REQRD BRG IN-SX
K	1440	0	1440	0	0	HANGER BY OTHERS MIN. SEAT SIZE: 1-8	
G	1440	0	1440	0	0	HANGER BY OTHERS MIN. SEAT SIZE: 1-8	

UNFACTORED REACTIONS

JT	1ST LCASE COMBINED	MAX./MIN. COMPONENT REACTIONS SNOW	LIVE	PERM.LIVE	WIND	DEAD	SOIL
K	1126	733 / 0	201 / 0	0 / 0	0 / 0	192 / 0	0 / 0
G	1126	733 / 0	201 / 0	0 / 0	0 / 0	192 / 0	0 / 0

BRACING

TOP CHORD TO BE SHEATHED OR MAX. PURLIN SPACING = 5.79 FT.
MAX. UNBRACED BOTTOM CHORD LENGTH = 10.00 FT. OR RIGID CEILING DIRECTLY APPLIED.

ALL PITCH BREAKS AND PERIMETER CORNER JOINTS MUST BE LATERALLY RESTRAINED.

LOADING

TOTAL LOAD CASES: (4)

CHORDS

MEMB. FR-TO	MAX. FACTORED FORCE (LBS)	FACTORED VERT. LOAD LC1 (PLF) FROM	TO	MAX CSI (LC)	MAX. UNBRAC LENGTH
A- B	0 / 34	-122.2	-122.2	0.23 (1)	10.00
B- C	-1118 / 0	-122.2	-122.2	0.19 (1)	5.79
C- D	-767 / 0	-122.2	-122.2	0.47 (1)	6.16
D- E	-1117 / 0	-122.2	-122.2	0.19 (1)	5.79
E- F	0 / 34	-122.2	-122.2	0.23 (1)	10.00
K- A	-159 / 0	0.0	0.0	0.02 (1)	7.81
G- F	-159 / 0	0.0	0.0	0.02 (1)	7.81
K- J	0 / 827	-28.0	-28.0	0.36 (2)	10.00
J- I	0 / 767	-28.0	-28.0	0.35 (2)	10.00
I- H	0 / 767	-28.0	-28.0	0.35 (2)	10.00
H- G	0 / 827	-28.0	-28.0	0.36 (2)	10.00

WEBS

MEMB. FR-TO	MAX. FACTORED FORCE (LBS)	MAX CSI (LC)
B- J	-108 / 64	0.07 (1)
J- C	0 / 313	0.07 (2)
J- D	0 / 0	0.00 (1)
H- D	0 / 312	0.07 (2)
H- E	-108 / 64	0.07 (1)
K- B	-1456 / 0	0.89 (1)
E- G	-1455 / 0	0.89 (1)

DESIGN CRITERIA

SPECIFIED LOADS:

TOP CH.	LL	=	38.3	PSF
	DL	=	3.0	PSF
BOT CH.	LL	=	10.5	PSF
	DL	=	7.0	PSF
TOTAL LOAD		=	58.7	PSF

SPACING = 24.0 IN. C/C

LOADING IN FLAT SECTION BASED ON A SLOPE OF 6.00/12

THIS TRUSS IS DESIGNED FOR RESIDENTIAL OR SMALL BUILDING REQUIREMENTS OF PART 9, NBCC 2010

THIS DESIGN COMPLIES WITH:
- PART 9 OF OBC 2012 , BCBC 2012 , ABC 2014
- CSA 086-09
- TPIC 2011

(55 % OF 54.4 P.S.F. G.S.L. PLUS 8.4 P.S.F. RAIN LOAD) EQUALS 38.3 P.S.F. SPECIFIED ROOF LIVE LOAD

ALLOWABLE DEFL.(LL)= L/360 (0.64")
CALCULATED VERT. DEFL.(LL) = L/ 999 (0.10")
ALLOWABLE DEFL.(TL)= L/360 (0.64")
CALCULATED VERT. DEFL.(TL) = L/ 999 (0.17")

CSI: TC=0.47 (C-D:1) , BC=0.36 (G-H:2) , WB=0.89 (B-K:1) , SSI=0.26 (C-D:1)

DOL LUMBER=1.00 NAIL=1.00 LS BEND=1.10 COMP=1.10 SHEAR=1.10 TENS= 1.10

COMPANION LIVE LOAD FACTOR = 0.50

TRUSS PLATE MANUFACTURER IS NOT RESPONSIBLE FOR QUALITY CONTROL IN THE TRUSS MANUFACTURING PLANT .

NAIL VALUES

PLATE	GRIP(DRY) (PSI) MAX	MIN	SHEAR (PLI) MAX	MIN	SECTION (PLI) MAX	MIN
MT20	618	354	1667	822	2284	1656

PLATE PLACEMENT TOL. = 0.250 inches

PLATE ROTATION TOL. = 5.0 Deg.

JSI GRIP= 0.77 (B) (INPUT = 0.90)
JSI METAL= 0.36 (B) (INPUT = 1.00)

LICENSED PROFESSIONAL ENGINEER
9/11/17
S. KATSOULAKOS
PROVINCE OF ONTARIO

DWG NO. TAM 45752-17
STRUCTURAL
COMPONENT ONLY

JOB NAME	TRUSS NAME	QUANTITY	PLY	JOB DESC. 42067	DRWG NO.
272821	T12	1	1	TRUSS DESC.	

Tamarack Roof Truss, Burlington

Version 8.030 S Oct 5 2016 MiTek Industries, Inc. Mon Sep 11 07:44:07 2017 Page 1

ID:VZPLc5c1tt2s2iP8vPCsK7y77Bn-j9ElCNdJPFzTRfbz4LN7_5bS4t6Bfw9byPUV4TyenTs

Scale = 1:62.8

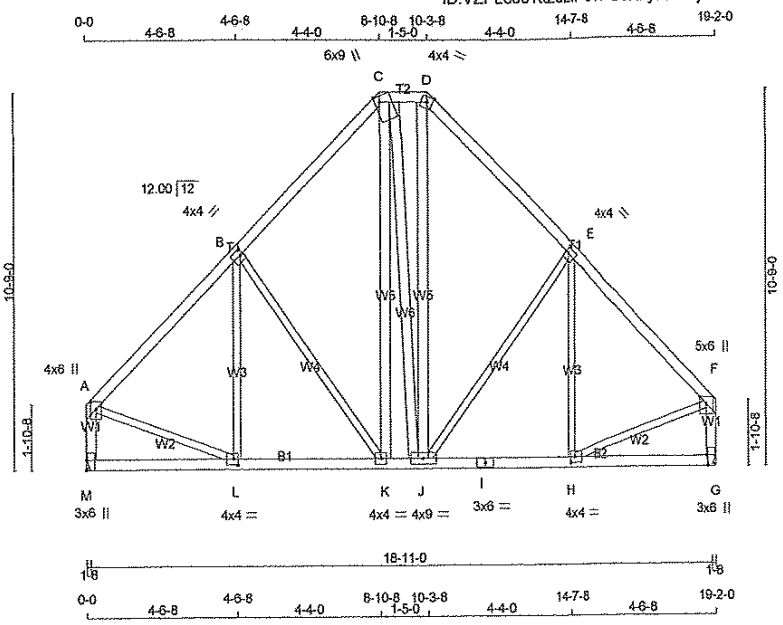

TOTAL WEIGHT = 119 lb

[M][F]

LUMBER

N. L. G. A. RULES

CHORDS	SIZE		LUMBER	DESCR.
A - C	2x4	DRY	No.2	SPF
C - D	2x4	DRY	No.2	SPF
D - F	2x4	DRY	No.2	SPF
M - A	2x4	DRY	No.2	SPF
G - F	2x4	DRY	No.2	SPF
M - I	2x4	DRY	No.2	SPF
I - G	2x4	DRY	No.2	SPF
ALL WEBS	2x3	DRY	No.2	SPF
EXCEPT				
K - C	2x4	DRY	No.2	SPF
C - J	2x4	DRY	No.2	SPF
J - D	2x4	DRY	No.2	SPF

DRY: SEASONED LUMBER.

PLATES (table is in inches)

JT	TYPE	PLATES	W	LEN	Y	X
A	TMWW+p	MT20	4.0	6.0	2.50	2.00
B	TMWW-t	MT20	4.0	4.0	2.00	1.00
C	TTWW+m	MT20	6.0	9.0	Edge	1.75
D	TTW-m	MT20	4.0	4.0	Edge	
E	TMWW-t	MT20	4.0	4.0	2.00	1.00
F	TMWW+p	MT20	5.0	6.0	Edge	
G	BMV1+t	MT20	3.0	6.0	Edge	0.50
H	BMWW-t	MT20	4.0	4.0	2.00	1.50
I	BS-t	MT20	3.0	6.0		
J	BMWWW-t	MT20	4.0	9.0		
K	BMWW-t	MT20	4.0	4.0		
L	BMWW-t	MT20	4.0	4.0	2.00	1.50
M	BMV1+t	MT20	3.0	6.0	3.50	

Edge - INDICATES REFERENCE CORNER OF PLATE TOUCHES EDGE OF CHORD.

DIMENSIONS, SUPPORTS AND LOADINGS SPECIFIED BY FABRICATOR TO BE VERIFIED BY BUILDING DESIGNER

BEARINGS

JT	FACTORED GROSS REACTION VERT	HORZ	MAXIMUM FACTORED GROSS REACTION DOWN	HORZ	UPLIFT	INPUT BRG IN-SX	REQRD BRG IN-SX
M	1440	0	1440	0	0	HANGER BY OTHERS MIN. SEAT SIZE: 1-8	
G	1440	0	1440	0	0	HANGER BY OTHERS MIN. SEAT SIZE: 1-8	

UNFACTORED REACTIONS

JT	1ST LCASE COMBINED	MAX /MIN. COMPONENT REACTIONS SNOW	LIVE	PERM.LIVE	WIND	DEAD	SOIL
M	1126	733 / 0	201 / 0	0 / 0	0 / 0	192 / 0	0 / 0
G	1126	733 / 0	201 / 0	0 / 0	0 / 0	192 / 0	0 / 0

BRACING

TOP CHORD TO BE SHEATHED OR MAX. PURLIN SPACING = 5.45 FT.
MAX. UNBRACED BOTTOM CHORD LENGTH = 10.00 FT. OR RIGID CEILING DIRECTLY APPLIED.

ALL PITCH BREAKS AND PERIMETER CORNER JOINTS MUST BE LATERALLY RESTRAINED.

LOADING

TOTAL LOAD CASES: (4)

CHORDS

MEMB. FR-TO	MAX. FACTORED FORCE (LBS)	FACTORED VERT. LOAD (PLF) FROM	TO	LC1	MAX CSI (LC)	MAX. UNBRAC LENGTH
A- B	-1199 / 0	-122.2	-122.2	0.33 (1)	5.45	5.90
B- C	-976 / 0	-122.2	-122.2	0.32 (1)	5.90	5.90
C- D	-662 / 0	-122.2	-122.2	0.04 (1)	6.25	6.25
D- E	-980 / 0	-122.2	-122.2	0.32 (1)	5.89	5.89
E- F	-1198 / 0	-122.2	-122.2	0.33 (1)	5.45	5.45
M- A	-1388 / 0	0.0	0.0	0.15 (1)	6.90	6.90
G- F	-1387 / 0	0.0	0.0	0.15 (1)	6.91	6.91
M- L	0 / 0	-28.0	-28.0	0.15 (3)	10.00	
L- K	0 / 880	-28.0	-28.0	0.23 (2)	10.00	
K- J	0 / 659	-28.0	-28.0	0.17 (1)	10.00	
J- I	0 / 879	-28.0	-28.0	0.23 (2)	10.00	
I- H	0 / 879	-28.0	-28.0	0.23 (2)	10.00	
H- G	0 / 0	-28.0	-28.0	0.14 (3)	10.00	

WEBS

MEMB. FR-TO	MAX. FACTORED FORCE (LBS)	MAX CSI (LC)
L- B	-147 / 149	0.10 (1)
B- K	-380 / 0	0.43 (1)
K- C	0 / 350	0.06 (1)
C- J	0 / 25	0.00 (1)
J- D	0 / 378	0.06 (1)
J- E	-374 / 0	0.42 (1)
H- E	-156 / 143	0.10 (1)
A- L	0 / 928	0.21 (1)
H- F	0 / 927	0.21 (1)

DESIGN CRITERIA

SPECIFIED LOADS:

TOP CH.	LL	=	38.3	PSF
	DL	=	3.0	PSF
BOT CH.	LL	=	10.5	PSF
	DL	=	7.0	PSF
TOTAL LOAD		=	58.7	PSF

SPACING = 24.0 IN. C/C

LOADING IN FLAT SECTION BASED ON A SLOPE OF 6.00/12

THIS TRUSS IS DESIGNED FOR RESIDENTIAL OR SMALL BUILDING REQUIREMENTS OF PART 9, NBCC 2010

THIS DESIGN COMPLIES WITH:
- PART 9 OF OBC 2012 , BCBC 2012 , ABC 2014
- CSA 086-09
- TPIC 2011

(55 % OF 54.4 P.S.F. G.S.L. PLUS 8.4 P.S.F. RAIN LOAD) EQUALS 38.3 P.S.F. SPECIFIED ROOF LIVE LOAD

ALLOWABLE DEFL.(LL)= L/360 (0.64")
CALCULATED VERT. DEFL.(LL) = L/ 999 (0.03")
ALLOWABLE DEFL.(TL)= L/360 (0.64")
CALCULATED VERT. DEFL.(TL) = L/ 999 (0.05")

CSI: TC=0.33 (A-B:1) , BC=0.23 (K-L:2) , WB=0.43 (B-K:1) , SSI=0.19 (A-B:1)

DOL LUMBER=1.00 NAIL=1.00 LS BEND=1.10 COMP=1.10 SHEAR=1.10 TENS= 1.10

COMPANION LIVE LOAD FACTOR = 0.50

TRUSS PLATE MANUFACTURER IS NOT RESPONSIBLE FOR QUALITY CONTROL IN THE TRUSS MANUFACTURING PLANT .

NAIL VALUES

PLATE	GRIP(DRY) (PSI) MAX	MIN	SHEAR (PLI) MAX	MIN	SECTION (PLI) MAX	MIN
MT20	618	354	1667	822	2284	1656

PLATE PLACEMENT TOL. = 0.250 inches

PLATE ROTATION TOL. = 5.0 Deg.

JSI GRIP= 0.86 (A) (INPUT = 0.90)
JSI METAL= 0.33 (L) (INPUT = 1.00)

LICENSED PROFESSIONAL ENGINEER
9/11/17
S. KATSOULAKOS
PROVINCE OF ONTARIO

DWG NO. TAM 45753-17
STRUCTURAL
COMPONENT ONLY

JOB NAME	TRUSS NAME	QUANTITY	PLY	JOB DESC. 42067	DRWG NO.
272821	T13	1	1	TRUSS DESC.	

Tamarack Roof Truss, Burlington

Version 8.030 S Oct 5 2016 MiTek Industries, Inc. Mon Sep 11 07:44:07 2017 Page 1
ID:VZPLc5c1tt2s2iP8vPCsK7y77Bn-j9EICNdJPFzTRfbz4LN7_5bULt7bf_zbyPUV4TyenTs

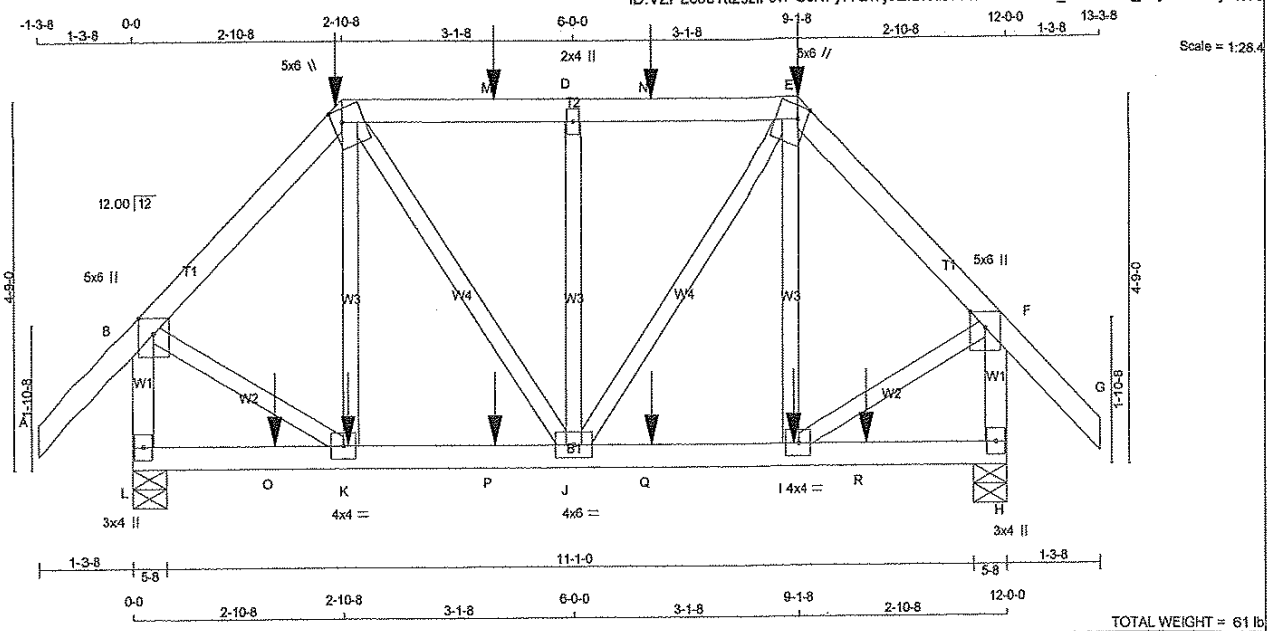

TOTAL WEIGHT = 61 lb

[M]

LUMBER

N. L. G. A. RULES

CHORDS	SIZE		LUMBER	DESCR.
A - C	2x4	DRY	No.2	SPF
C - E	2x4	DRY	No.2	SPF
E - G	2x4	DRY	No.2	SPF
L - B	2x4	DRY	No.2	SPF
H - F	2x4	DRY	No.2	SPF
L - H	2x4	DRY	No.2	SPF
ALL WEBS EXCEPT	2x3	DRY	No.2	SPF

DRY: SEASONED LUMBER.

PLATES (table is in inches)

JT	TYPE	PLATES	W	LEN	Y	X
B	TMVW+p	MT20	5.0	6.0	Edge	
C	TTWW+m	MT20	5.0	6.0	2.00	1.50
D	TMW+w	MT20	2.0	4.0		
E	TTWW+m	MT20	5.0	6.0	2.00	1.50
F	TMVW+p	MT20	5.0	6.0	Edge	
H	BMV1+p	MT20	3.0	4.0		
I	BMWW-t	MT20	4.0	4.0		
J	BMWWW-t	MT20	4.0	6.0		
K	BMWW-t	MT20	4.0	4.0		
L	BMV1+p	MT20	3.0	4.0		

Edge - INDICATES REFERENCE CORNER OF PLATE TOUCHES EDGE OF CHORD.

HANGERS NOTES

1) SPECIAL HANGER(S) OR CONNECTION(S) REQUIRED TO SUPPORT CONCENTRATED LOAD(S) 112.3 lbs FACTORED DOWN AND 199.8 lbs FACTORED UP AT 2-10-8, 53.5 lbs FACTORED DOWN AT 4-11-4, AND 53.5 lbs FACTORED DOWN AT 7-0-12, AND 112.3 lbs FACTORED DOWN AND 199.8 lbs FACTORED UP AT 9-1-8 ON TOP CHORD, AND 16.0 lbs FACTORED DOWN AND 1.0 lbs FACTORED UP AT 1-11-4, 21.4 lbs FACTORED DOWN AT 2-11-4, 21.4 lbs FACTORED DOWN AT 4-11-4, 21.4 lbs FACTORED DOWN AT 7-0-12, AND 21.4 lbs FACTORED DOWN AT 9-0-12, AND 16.0 lbs FACTORED DOWN AND 1.0 lbs FACTORED UP AT 10-0-12 ON BOTTOM CHORD. DESIGN FOR UNSPECIFIED CONNECTION(S) IS DELEGATED TO THE BUILDING DESIGNER.

DIMENSIONS, SUPPORTS AND LOADINGS SPECIFIED BY FABRICATOR TO BE VERIFIED BY BUILDING DESIGNER

BEARINGS

JT	FACTORED GROSS REACTION VERT	HORZ	MAXIMUM FACTORED GROSS REACTION DOWN	HORZ	UPLIFT	INPUT BRG IN-SX	REQRD BRG IN-SX
L	1261	0	1261	0	0	5-8	5-8
H	1261	0	1261	0	0	5-8	5-8

UNFACTORED REACTIONS

JT	1ST LCASE COMBINED	MAX./MIN. COMPONENT REACTIONS SNOW	LIVE	PERM.LIVE	WIND	DEAD	SOIL
L	969	659 / 0	154 / 0	0 / 0	0 / 0	156 / 0	0 / 0
H	970	659 / 0	154 / 0	0 / 0	0 / 0	156 / 0	0 / 0

BEARING MATERIAL TO BE SPF NO.2 OR BETTER AT JOINT(S) L, H

BRACING

TOP CHORD TO BE SHEATHED OR MAX. PURLIN SPACING = 6.25 FT.
MAX. UNBRACED BOTTOM CHORD LENGTH = 10.00 FT. OR RIGID CEILING DIRECTLY APPLIED.

ALL PITCH BREAKS AND PERIMETER CORNER JOINTS MUST BE LATERALLY RESTRAINED.

LOADING

TOTAL LOAD CASES: (7)

CHORDS

MEMB. FR-TO	MAX. FACTORED FORCE (LBS)	FACTORED VERT. LOAD (PLF) FROM	TO	LC1	MAX CSI (LC)	MAX. UNBRAC LENGTH
A- B	0 / 60	-122.2	-122.2	0.19 (1)	10.00	
B- C	-825 / 0	-122.2	-122.2	0.20 (1)	6.25	
C- M	-797 / 0	-122.2	-122.2	0.25 (1)	6.25	
M- D	-797 / 0	-122.2	-122.2	0.25 (1)	6.25	
D- N	-797 / 0	-122.2	-122.2	0.25 (1)	6.25	
N- E	-797 / 0	-122.2	-122.2	0.25 (1)	6.25	
E- F	-825 / 0	-122.2	-122.2	0.20 (1)	6.25	
F- G	0 / 60	-122.2	-122.2	0.19 (1)	10.00	
L- B	-1229 / 0	0.0	0.0	0.15 (1)	7.20	
H- F	-1229 / 0	0.0	0.0	0.15 (1)	7.20	
L- O	0 / 0	-28.0	-28.0	0.08 (7)	10.00	
O- K	0 / 0	-28.0	-28.0	0.08 (7)	10.00	
K- P	0 / 576	-28.0	-28.0	0.14 (1)	10.00	
P- J	0 / 576	-28.0	-28.0	0.14 (1)	10.00	
J- Q	0 / 576	-28.0	-28.0	0.14 (1)	10.00	
Q- I	0 / 576	-28.0	-28.0	0.14 (1)	10.00	
I- R	0 / 0	-28.0	-28.0	0.08 (7)	10.00	
R- H	0 / 0	-28.0	-28.0	0.08 (7)	10.00	

WEBS

MEMB. FR-TO	MAX. FACTORED FORCE (LBS)	MAX CSI (LC)
K- C	-182 / 92	0.06 (1)
C- J	0 / 385	0.10 (1)
J- D	-540 / 0	0.19 (1)
J- E	0 / 385	0.10 (1)
I- E	-182 / 92	0.06 (1)
B- K	0 / 652	0.16 (1)
I- F	0 / 652	0.16 (1)

FACTORED CONCENTRATED LOADS (LBS)

JT	LOC.	LC1	MAX-	MAX+	FACE	DIR.	TYPE
C	2-10-8	-112	-112	207	BACK	VERT	TOTAL
E	9-1-8	-112	-112	207	BACK	VERT	TOTAL
I	9-0-12	-12	-21	—	BACK	VERT	TOTAL
K	2-11-4	-12	-21	—	BACK	VERT	TOTAL
M	4-11-4	-53	-53	—	BACK	VERT	TOTAL
N	7-0-12	-53	-53	—	BACK	VERT	TOTAL
O	1-11-4	1	-16	1	BACK	VERT	TOTAL
P	4-11-4	-12	-21	—	BACK	VERT	TOTAL
Q	7-0-12	-12	-21	—	BACK	VERT	TOTAL
R	10-0-12	1	-16	1	BACK	VERT	TOTAL

DESIGN CRITERIA

SPECIFIED LOADS:

TOP CH.	LL	=	38.3	PSF
	DL	=	3.0	PSF
BOT CH.	LL	=	10.5	PSF
	DL	=	7.0	PSF
TOTAL LOAD		=	58.7	PSF

SPACING = 24.0 IN. C/C

LOADING IN FLAT SECTION BASED ON A SLOPE OF 6.00/12

THIS TRUSS IS DESIGNED FOR RESIDENTIAL OR SMALL BUILDING REQUIREMENTS OF PART 9, NBCC 2010

THIS DESIGN COMPLIES WITH:
- PART 9 OF OBC 2012 , BCBC 2012 , ABC 2014
- CSA 086-09
- TPIC 2011

(55 % OF 54.4 P.S.F. G.S.L. PLUS 8.4 P.S.F. RAIN LOAD) EQUALS 38.3 P.S.F. SPECIFIED ROOF LIVE LOAD

ALLOWABLE DEFL.(LL)= L/360 (0.40")
CALCULATED VERT. DEFL.(LL) = L/ 999 (0.02")
ALLOWABLE DEFL.(TL)= L/360 (0.40")
CALCULATED VERT. DEFL.(TL) = L/ 999 (0.02")

CSI: TC=0.25 (C-D:1) , BC=0.14 (I-J:1) , WB=0.19 (D-J:1) , SSI=0.24 (C-D:1)

DOL LUMBER=1.00 NAIL=1.00 LS BEND=1.00 COMP=1.00 SHEAR=1.00 TENS= 1.00

COMPANION LIVE LOAD FACTOR = 0.50

TRUSS PLATE MANUFACTURER IS NOT RESPONSIBLE FOR QUALITY CONTROL IN THE TRUSS MANUFACTURING PLANT .

NAIL VALUES

PLATE	GRIP(DRY) (PSI) MAX	MIN	SHEAR (PLI) MAX	MIN	SECTION (PLI) MAX	MIN
MT20	618	354	1667	822	2284	1656

PLATE PLACEMENT TOL. = 0.250 inches

PLATE ROTATION TOL. = 5.0 Deg.

JSI GRIP= 0.67 (K) (INPUT = 0.90)
JSI METAL= 0.22 (I) (INPUT = 1.00)

LICENSED PROFESSIONAL ENGINEER
9142
S. KATSOULAKOS
PROVINCE OF ONTARIO

DWG NO. TAM 45754-17
STRUCTURAL
COMPONENT ONLY

JOB NAME	TRUSS NAME	QUANTITY	PLY	JOB DESC. 42067	DRWG NO.
272821	T14	1	1	TRUSS DESC.	

Tamarack Roof Truss, Burlington

Version 8.030 S Oct 5 2016 MiTek Industries, Inc. Mon Sep 11 07:44:07 2017 Page 1

ID:VZPLc5c1tt2s2iP8vPCsK7y77Bn-j9EICNdJPFzTRfbz4LN7_5bSOt73f?MbyPUV4TyenTs

Scale = 1:38.8

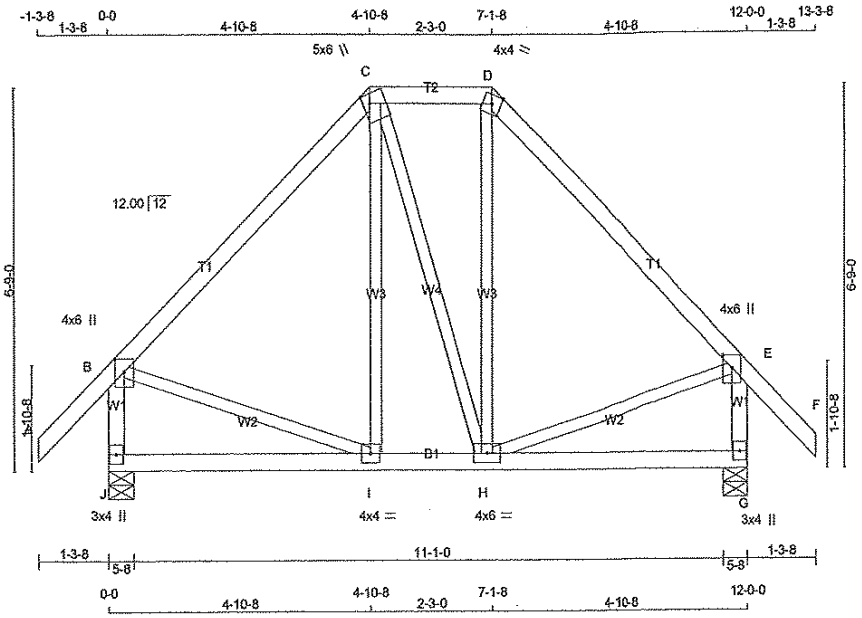

TOTAL WEIGHT = 63 lb

[M][F]

LUMBER

N. L. G. A. RULES

CHORDS	SIZE		LUMBER	DESCR.
A - C	2x4	DRY	No.2	SPF
C - D	2x4	DRY	No.2	SPF
D - F	2x4	DRY	No.2	SPF
J - B	2x4	DRY	No.2	SPF
G - E	2x4	DRY	No.2	SPF
J - G	2x4	DRY	No.2	SPF
ALL WEBS EXCEPT	2x3	DRY	No.2	SPF

DRY: SEASONED LUMBER.

PLATES (table is in inches)

JT	TYPE	PLATES	W	LEN	Y	X
B	TMVW+p	MT20	4.0	6.0	2.75	2.00
C	TTWW+m	MT20	5.0	6.0	2.00	1.50
D	TTW-m	MT20	4.0	4.0	Edge	
E	TMVW+p	MT20	4.0	6.0	2.75	2.00
G	BMV1+p	MT20	3.0	4.0		
H	BMWWW-t	MT20	4.0	6.0		
I	BMWW-t	MT20	4.0	4.0		
J	BMV1+p	MT20	3.0	4.0		

Edge - INDICATES REFERENCE CORNER OF PLATE TOUCHES EDGE OF CHORD.

DIMENSIONS, SUPPORTS AND LOADINGS SPECIFIED BY FABRICATOR TO BE VERIFIED BY BUILDING DESIGNER

BEARINGS

JT	FACTORED GROSS REACTION VERT	HORZ	MAXIMUM FACTORED GROSS REACTION DOWN	HORZ	UPLIFT	INPUT BRG IN-SX	REQRD BRG IN-SX
J	1072	0	1072	0	0	5-8	5-8
G	1072	0	1072	0	0	5-8	5-8

UNFACTORED REACTIONS

JT	1ST LCASE COMBINED	MAX./MIN. COMPONENT REACTIONS SNOW	LIVE	PERM.LIVE	WIND	DEAD	SOIL
J	820	566 / 0	126 / 0	0 / 0	0 / 0	128 / 0	0 / 0
G	820	566 / 0	126 / 0	0 / 0	0 / 0	128 / 0	0 / 0

BEARING MATERIAL TO BE SPF NO.2 OR BETTER AT JOINT(S) J, G

BRACING

TOP CHORD TO BE SHEATHED OR MAX. PURLIN SPACING = 6.25 FT.
MAX. UNBRACED BOTTOM CHORD LENGTH = 10.00 FT. OR RIGID CEILING DIRECTLY APPLIED.

ALL PITCH BREAKS AND PERIMETER CORNER JOINTS MUST BE LATERALLY RESTRAINED.

LOADING

TOTAL LOAD CASES: (4)

CHORDS

MEMB. FR-TO	MAX. FACTORED FORCE (LBS)	FACTORED VERT. LOAD LC1 (PLF) FROM	TO	MAX CSI (LC)	MAX. UNBRAC LENGTH
A- B	0 / 60	-122.2	-122.2	0.17 (1)	10.00
B- C	-588 / 0	-122.2	-122.2	0.38 (1)	6.25
C- D	-414 / 0	-122.2	-122.2	0.08 (1)	6.25
D- E	-588 / 0	-122.2	-122.2	0.38 (1)	6.25
E- F	0 / 60	-122.2	-122.2	0.17 (1)	10.00
J- B	-1013 / 0	0.0	0.0	0.11 (1)	7.78
G- E	-1013 / 0	0.0	0.0	0.11 (1)	7.78
J- I	0 / 0	-28.0	-28.0	0.15 (2)	10.00
I- H	0 / 415	-28.0	-28.0	0.18 (2)	10.00
H- G	0 / 0	-28.0	-28.0	0.14 (2)	10.00

WEBS

MEMB. FR-TO	MAX. FACTORED FORCE (LBS)	MAX CSI (LC)
I- C	-18 / 138	0.03 (3)
C- H	0 / 2	0.00 (3)
H- D	-18 / 141	0.03 (3)
B- I	0 / 434	0.10 (1)
H- E	0 / 434	0.10 (1)

DWG NO. TAM 45755-17
STRUCTURAL
COMPONENT ONLY

DESIGN CRITERIA

SPECIFIED LOADS:

TOP CH.	LL	=	38.3	PSF
	DL	=	3.0	PSF
BOT CH.	LL	=	10.5	PSF
	DL	=	7.0	PSF
TOTAL LOAD		=	58.7	PSF

SPACING = 24.0 IN. C/C

LOADING IN FLAT SECTION BASED ON A SLOPE OF 6.00/12

THIS TRUSS IS DESIGNED FOR RESIDENTIAL OR SMALL BUILDING REQUIREMENTS OF PART 9, NBCC 2010

THIS DESIGN COMPLIES WITH:
- PART 9 OF OBC 2012 , BCBC 2012 , ABC 2014
- CSA 086-09
- TPIC 2011

(55 % OF 54.4 P.S.F. G.S.L. PLUS 8.4 P.S.F. RAIN LOAD) EQUALS 38.3 P.S.F. SPECIFIED ROOF LIVE LOAD

ALLOWABLE DEFL.(LL)= L/360 (0.40")
CALCULATED VERT. DEFL.(LL) = L/ 999 (0.03")
ALLOWABLE DEFL.(TL)= L/360 (0.40")
CALCULATED VERT. DEFL.(TL) = L/ 999 (0.05")

CSI: TC=0.38 (B-C:1) , BC=0.18 (H-I:2) , WB=0.10 (B-I:1) , SSI=0.16 (B-C:1)

DOL LUMBER=1.00 NAIL=1.00 LS BEND=1.10 COMP=1.10 SHEAR=1.10 TENS= 1.10

COMPANION LIVE LOAD FACTOR = 0.50

TRUSS PLATE MANUFACTURER IS NOT RESPONSIBLE FOR QUALITY CONTROL IN THE TRUSS MANUFACTURING PLANT .

NAIL VALUES

PLATE	GRIP(DRY) (PSI) MAX	MIN	SHEAR (PLI) MAX	MIN	SECTION (PLI) MAX	MIN
MT20	618	354	1667	822	2284	1656

PLATE PLACEMENT TOL. = 0.250 inches

PLATE ROTATION TOL. = 5.0 Deg.

JSI GRIP= 0.71 (H) (INPUT = 0.90)
JSI METAL= 0.19 (B) (INPUT = 1.00)

JOB NAME	TRUSS NAME	QUANTITY	PLY	JOB DESC. 42067	DRWG NO.
272821	T15	1	1	TRUSS DESC.	

Tamarack Roof Truss, Burlington

Version 8.030 S Oct 5 2016 MiTek Industries, Inc. Mon Sep 11 07:44:08 2017 Page 1
ID:VZPLc5c1tt2s2iP8vPCsK7y77Bn-BLn7PjexAY5K2pA9e3uMXJ8gLGQrOMylA3D2cvyenTr

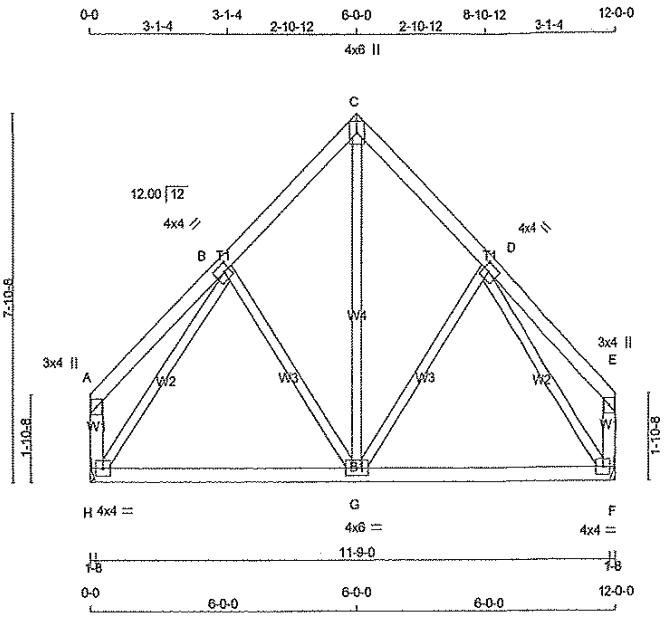

TOTAL WEIGHT = 59 lb

[M][F]

LUMBER
N. L. G. A. RULES

CHORDS	SIZE		LUMBER	DESCR.
A - C	2x4	DRY	No.2	SPF
C - E	2x4	DRY	No.2	SPF
H - A	2x4	DRY	No.2	SPF
F - E	2x4	DRY	No.2	SPF
H - F	2x4	DRY	No.2	SPF
ALL WEBS EXCEPT	2x3	DRY	No.2	SPF

DRY: SEASONED LUMBER.

PLATES (table is in inches)

JT	TYPE	PLATES	W	LEN	Y	X
A	TMV+p	MT20	3.0	4.0		
B	TMWW-t	MT20	4.0	4.0	2.00	1.50
C	TTW+p	MT20	4.0	6.0		
D	TMWW-t	MT20	4.0	4.0	2.00	1.50
E	TMV+p	MT20	3.0	4.0		
F	BMVW1-t	MT20	4.0	4.0		
G	BMWWW-t	MT20	4.0	6.0		
H	BMVW1-t	MT20	4.0	4.0		

DIMENSIONS, SUPPORTS AND LOADINGS SPECIFIED BY FABRICATOR TO BE VERIFIED BY BUILDING DESIGNER

BEARINGS

JT	FACTORED GROSS REACTION VERT	HORZ	MAXIMUM FACTORED GROSS REACTION DOWN	HORZ	UPLIFT	INPUT BRG IN-SX	REQRD BRG IN-SX
H	901	0	901	0	0	HANGER BY OTHERS MIN. SEAT SIZE: 1-8	
F	901	0	901	0	0	HANGER BY OTHERS MIN. SEAT SIZE: 1-8	

UNFACTORED REACTIONS

JT	1ST LCASE COMBINED	MAX./MIN. COMPONENT REACTIONS SNOW	LIVE	PERM.LIVE	WIND	DEAD	SOIL
H	705	459 / 0	126 / 0	0 / 0	0 / 0	120 / 0	0 / 0
F	705	459 / 0	126 / 0	0 / 0	0 / 0	120 / 0	0 / 0

BRACING
TOP CHORD TO BE SHEATHED OR MAX. PURLIN SPACING = 6.25 FT.
MAX. UNBRACED BOTTOM CHORD LENGTH = 10.00 FT. OR RIGID CEILING DIRECTLY APPLIED.

ALL PITCH BREAKS AND PERIMETER CORNER JOINTS MUST BE LATERALLY RESTRAINED.

LOADING
TOTAL LOAD CASES: (4)

CHORDS

MEMB. FR-TO	MAX. FACTORED FORCE (LBS)	FACTORED VERT. LOAD (PLF) FROM	TO	LC1 CSI	MAX (LC)	MAX. UNBRAC LENGTH
A- B	0 / 30	-122.2	-122.2	0.17	(1)	10.00
B- C	-559 / 0	-122.2	-122.2	0.13	(1)	6.25
C- D	-559 / 0	-122.2	-122.2	0.13	(1)	6.25
D- E	0 / 30	-122.2	-122.2	0.17	(1)	10.00
H- A	-139 / 0	0.0	0.0	0.02	(1)	7.81
F- E	-139 / 0	0.0	0.0	0.02	(1)	7.81
H- G	0 / 461	-28.0	-28.0	0.33	(2)	10.00
G- F	0 / 461	-28.0	-28.0	0.33	(2)	10.00

WEBS

MEMB. FR-TO	MAX. FACTORED FORCE (LBS)	MAX CSI (LC)
G- C	0 / 458	0.10 (1)
G- D	-152 / 36	0.08 (1)
B- G	-152 / 36	0.08 (1)
H- B	-836 / 0	0.40 (1)
D- F	-836 / 0	0.40 (1)

DESIGN CRITERIA

SPECIFIED LOADS:

TOP CH.	LL	=	38.3	PSF
	DL	=	3.0	PSF
BOT CH.	LL	=	10.5	PSF
	DL	=	7.0	PSF
TOTAL LOAD		=	58.7	PSF

SPACING = 24.0 IN. C/C

THIS TRUSS IS DESIGNED FOR RESIDENTIAL OR SMALL BUILDING REQUIREMENTS OF PART 9, NBCC 2010

THIS DESIGN COMPLIES WITH:
- PART 9 OF OBC 2012 , BCBC 2012 , ABC 2014
- CSA 086-09
- TPIC 2011

(55 % OF 54.4 P.S.F. G.S.L. PLUS 8.4 P.S.F. RAIN LOAD) EQUALS 38.3 P.S.F. SPECIFIED ROOF LIVE LOAD

ALLOWABLE DEFL.(LL)= L/360 (0.40")
CALCULATED VERT. DEFL.(LL) = L/ 999 (0.04")
ALLOWABLE DEFL.(TL)= L/360 (0.40")
CALCULATED VERT. DEFL.(TL) = L/ 999 (0.07")

CSI: TC=0.17 (A-B:1) , BC=0.33 (G-H:2) , WB=0.40 (B-H:1) , SSI=0.14 (G-H:3)

DOL LUMBER=1.00 NAIL=1.00 LS BEND=1.10 COMP=1.10 SHEAR=1.10 TENS= 1.10

COMPANION LIVE LOAD FACTOR = 0.50

TRUSS PLATE MANUFACTURER IS NOT RESPONSIBLE FOR QUALITY CONTROL IN THE TRUSS MANUFACTURING PLANT .

NAIL VALUES

PLATE	GRIP(DRY) (PSI) MAX	MIN	SHEAR (PLI) MAX	MIN	SECTION (PLI) MAX	MIN
MT20	618	354	1667	822	2284	1656

PLATE PLACEMENT TOL. = 0.250 inches

PLATE ROTATION TOL. = 5.0 Deg.

JSI GRIP= 0.81 (D) (INPUT = 0.90)
JSI METAL= 0.32 (B) (INPUT = 1.00)

LICENSED PROFESSIONAL ENGINEER
9/11/17
S. KATSOULAKOS
PROVINCE OF ONTARIO

DWG NO. TAM 45756 17
STRUCTURAL
COMPONENT ONLY

JOB NAME	TRUSS NAME	QUANTITY	PLY	JOB DESC. 42067	DRWG NO.
272821	T16Z	1	2	TRUSS DESC.	

Tamarack Roof Truss, Burlington

Version 8.030 S Oct 5 2016 MiTek Industries, Inc. Mon Sep 11 07:44:08 2017 Page 1
ID:ICtWqkzHJcrjayyEloEouzy77mm-BLn7PjexAY5K2pA9e3uMXJ8dOGJWOK?iA3D2cvyenTr

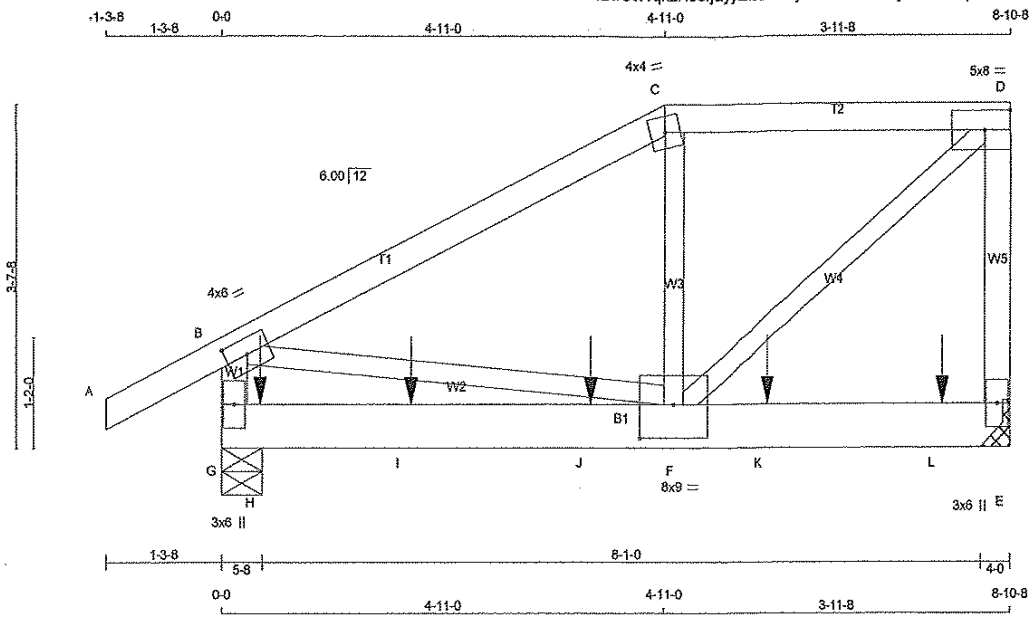

TOTAL WEIGHT = 2 X 42 = 84 lb

LUMBER
N. L. G. A. RULES

CHORDS	SIZE		LUMBER	DESCR.
A - C	2x4	DRY	No.2	SPF
C - D	2x4	DRY	No.2	SPF
E - D	2x4	DRY	No.2	SPF
G - B	2x4	DRY	No.2	SPF
G - E	2x6	DRY	No.2	SPF
ALL WEBS EXCEPT	2x3	DRY	No.2	SPF

DRY: SEASONED LUMBER.

DESIGN CONSISTS OF 2 TRUSSES BUILT SEPARATELY THEN FASTENED TOGETHER AS FOLLOWS:

CHORDS #ROWS	SURFACE SPACING (IN)	LOAD(PLF)
TOP CHORDS : (0.122"X3") SPIRAL NAILS		
A- C 1	12	TOP
C- D 1	12	TOP
D- E 1	12	TOP
G- B 1	12	TOP
BOTTOM CHORDS : (0.122"X3") SPIRAL NAILS		
G- E 2	8	SIDE(244.1)
WEBS : (0.122"X3") SPIRAL NAILS		
2x3 1	6	

NAILS TO BE DRIVEN FROM ONE SIDE ONLY.

GIRDER NAILING ASSUMES NAILED HANGERS ARE FASTENED WITH MIN. 3-0 INCH NAILS.

TOP - COMPONENTS ARE LOADED FROM THE TOP AND MUST BE PLACED ON TOP EDGE OF ALL PLIES FOR THE LOAD TO BE TRANSFERRED TO EACH PLY.

SIDE - PLF SHOWN IS THE EQUIVALENT UDL APPLIED TO ONE SIDE THAT THE CORRESPONDING NAILING PATTERN SHALL BE CAPABLE OF TRANSFERING. REMAINING PLF MUST BE APPLIED ON THE OPPOSITE SIDE OR ON THE TOP.

PLATES (table is in inches)

JT	TYPE	PLATES	W	LEN	Y	X
B	TMVW-t	MT20	4.0	6.0	2.00	3.00
C	TTW-m	MT20	4.0	4.0		
D	TMVW-t	MT20	5.0	8.0		Edge
E	BMV1+p	MT20	3.0	6.0		
F	BMWWW-t	MT20	8.0	9.0	4.25	4.50
G	BMV1+p	MT20	3.0	6.0		

Edge - INDICATES REFERENCE CORNER OF PLATE TOUCHES EDGE OF CHORD.

HANGERS NOTES

1) SPECIAL HANGER(S) OR CONNECTION(S) REQUIRED TO SUPPORT CONCENTRATED LOAD(S) 881.1 lbs FACTORED DOWN AT 5-4, 1680.0 lbs FACTORED DOWN AT 2-1-4, 1411.5 lbs FACTORED DOWN AT 4-1-4, AND 1411.5 lbs FACTORED DOWN AT 6-1-4, AND 1414.7 lbs FACTORED DOWN AT 8-1-4 ON BOTTOM CHORD. DESIGN FOR UNSPECIFIED CONNECTION(S) IS DELEGATED TO THE BUILDING DESIGNER.

DIMENSIONS, SUPPORTS AND LOADINGS SPECIFIED BY FABRICATOR TO BE VERIFIED BY BUILDING DESIGNER

BEARINGS

JT	FACTORED GROSS REACTION VERT	HORZ	MAXIMUM FACTORED GROSS REACTION DOWN	HORZ	UPLIFT	INPUT BRG IN-SX	REQRD BRG IN-SX
E	4024	0	4024	0	0	HANGER BY OTHERS MIN. SEAT SIZE: 4-0	
G	4274	0	4274	0	0	5-8	5-8

UNFACTORED REACTIONS

JT	1ST LCASE COMBINED	SNOW	MAX./MIN. COMPONENT REACTIONS LIVE	PERM.LIVE	WIND	DEAD	SOIL
E	3116	2082 / 0	522 / 0	0 / 0	0 / 0	512 / 0	0 / 0
G	3289	2235 / 0	527 / 0	0 / 0	0 / 0	527 / 0	0 / 0

BEARING MATERIAL TO BE SPF NO.2 OR BETTER AT JOINT(S) G

BRACING

TOP CHORD TO BE SHEATHED OR MAX. PURLIN SPACING = 4.63 FT.
MAX. UNBRACED BOTTOM CHORD LENGTH = 10.00 FT. OR RIGID CEILING DIRECTLY APPLIED.

ALL PITCH BREAKS AND PERIMETER CORNER JOINTS MUST BE LATERALLY RESTRAINED.

LOADING

TOTAL LOAD CASES: (4)

CHORDS

MEMB. FR-TO	MAX. FACTORED FORCE (LBS)	FACTORED VERT. LOAD (PLF) FROM	TO	LC1	MAX CSI (LC)
A- B	0 / 37	-122.2	-122.2	0.09 (1)	
B- C	-3497 / 0	-122.2	-122.2	0.36 (1)	
C- D	-3184 / 0	-122.2	-122.2	0.22 (1)	
E- D	-2978 / 0	0.0	0.0	0.29 (1)	
G- B	-2509 / 0	0.0	0.0	0.14 (1)	
G- H	0 / 0	-28.0	-28.0	0.80 (1)	
H- I	0 / 0	-28.0	-28.0	0.80 (1)	
I- J	0 / 0	-28.0	-28.0	0.80 (1)	
J- F	0 / 0	-28.0	-28.0	0.80 (1)	
F- K	0 / 0	-28.0	-28.0	0.70 (1)	
K- L	0 / 0	-28.0	-28.0	0.70 (1)	
L- E	0 / 0	-28.0	-28.0	0.70 (1)	

WEBS

MAX. UNBRAC LENGTH	MEMB. FR-TO	MAX. FACTORED FORCE (LBS)	MAX CSI (LC)
10.00	F- C	0 / 1021	0.13 (1)
4.63	F- D	0 / 4202	0.52 (1)
4.97	B- F	0 / 3161	0.39 (1)
6.68			
7.14			
10.00			
10.00			
10.00			
10.00			
10.00			
10.00			
10.00			

FACTORED CONCENTRATED LOADS (LBS)

JT	LOC.	LC1	MAX-	MAX+	FACE	DIR.	TYPE
H	5-4	-881	-881	---	FRONT	VERT	TOTAL
I	2-1-4	-1680	-1680	---	FRONT	VERT	TOTAL
J	4-1-4	-1412	-1412	---	FRONT	VERT	TOTAL
K	6-1-4	-1412	-1412	---	FRONT	VERT	TOTAL
L	8-1-4	-1415	-1415	---	FRONT	VERT	TOTAL

DWG NO. TAM45752-17
STRUCTURAL
COMPONENT ONLY

DESIGN CRITERIA [M]

SPECIFIED LOADS:

TOP CH.	LL	=	38.3	PSF
	DL	=	3.0	PSF
BOT CH.	LL	=	10.5	PSF
	DL	=	7.0	PSF
TOTAL LOAD		=	58.7	PSF

SPACING = 24.0 IN. C/C

LOADING IN FLAT SECTION BASED ON A SLOPE OF 6.00/12

THIS TRUSS IS DESIGNED FOR RESIDENTIAL OR SMALL BUILDING REQUIREMENTS OF PART 9, NBCC 2010

THIS DESIGN COMPLIES WITH:
- PART 9 OF OBC 2012 , BCBC 2012 , ABC 2014
- CSA 086-09
- TPIC 2011

(55 % OF 54.4 P.S.F. G.S.L. PLUS 8.4 P.S.F. RAIN LOAD) EQUALS 38.3 P.S.F. SPECIFIED ROOF LIVE LOAD

ALLOWABLE DEFL.(LL)= L/360 (0.30")
CALCULATED VERT. DEFL.(LL) = L/ 999 (0.09")
ALLOWABLE DEFL.(TL)= L/360 (0.30")
CALCULATED VERT. DEFL.(TL) = L/ 748 (0.14")

CSI: TC=0.36 (B-C:1) , BC=0.80 (F-G:1) , WB=0.52 (D-F:1) , SSI=0.78 (F-G:1)

DOL LUMBER=1.00 NAIL=1.00 LS BEND=1.00 COMP=1.00 SHEAR=1.00 TENS= 1.00

COMPANION LIVE LOAD FACTOR = 0.50

TRUSS PLATE MANUFACTURER IS NOT RESPONSIBLE FOR QUALITY CONTROL IN THE TRUSS MANUFACTURING PLANT .

NAIL VALUES

PLATE	GRIP(DRY) (PSI) MAX	MIN	SHEAR (PLI) MAX	MIN	SECTION (PLI) MAX	MIN
MT20	618	354	1667	822	2284	1656

PLATE PLACEMENT TOL. = 0.250 inches

PLATE ROTATION TOL. = 5.0 Deg.

JSI GRIP= 0.83 (B) (INPUT = 0.90)
JSI METAL= 0.46 (B) (INPUT = 1.00)

LICENSED PROFESSIONAL ENGINEER
9142
S. KATSOULAKOS
PROVINCE OF ONTARIO

JOB NAME	TRUSS NAME	QUANTITY	PLY	JOB DESC. 42067	DRWG NO.
272820	P1	2	1	TRUSS DESC.	

Tamarack Roof Truss, Burlington

Version 8.030 S Oct 5 2016 MiTek Industries, Inc. Mon Sep 11 07:41:49 2017 Page 1

ID:ICtWqkzHJcrjayyEloEouzy77mm-kcuaEBylvra2tS2R_MvmO?tpaE0lJasHDx2BFTyenW0

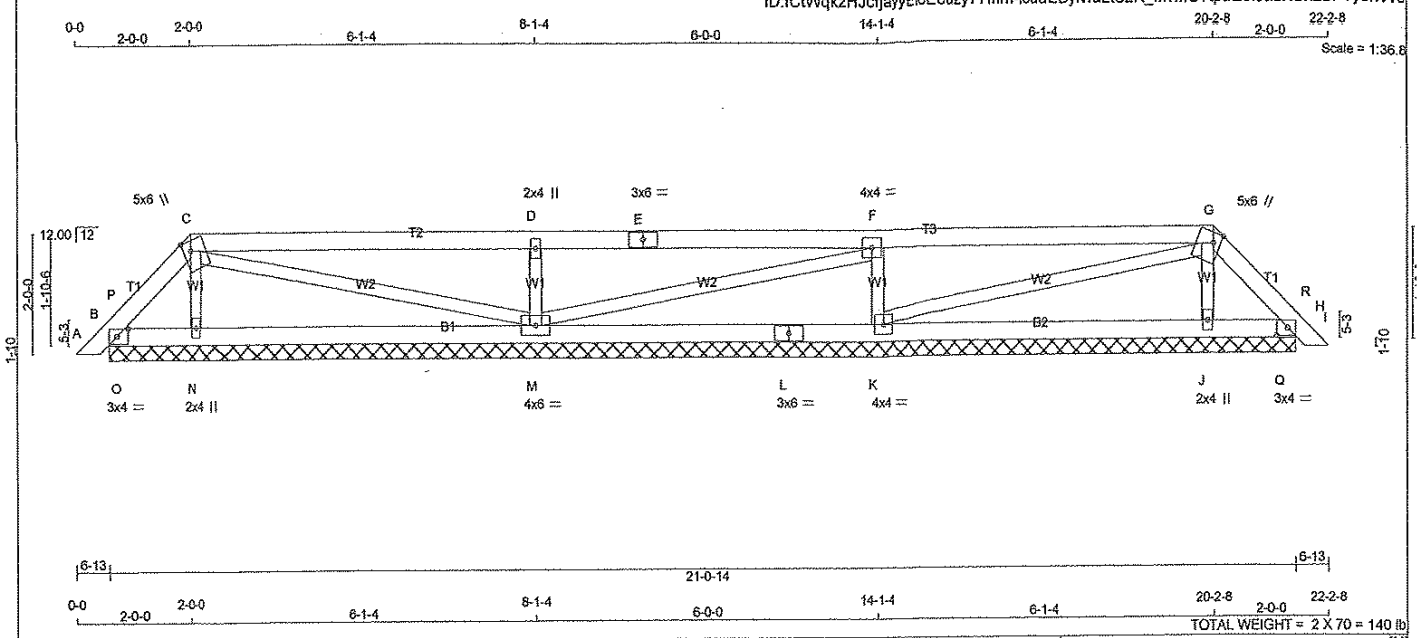

TOTAL WEIGHT = 2 X 70 = 140 lb

LUMBER

N. L. G. A. RULES

CHORDS	SIZE		LUMBER	DESCR.
A - C	2x4	DRY	No.2	SPF
C - E	2x4	DRY	No.2	SPF
E - G	2x4	DRY	No.2	SPF
G - I	2x4	DRY	No.2	SPF
B - L	2x4	DRY	No.2	SPF
L - H	2x4	DRY	No.2	SPF
ALL WEBS	2x3	DRY	No.2	SPF

DRY: SEASONED LUMBER.

PLATES (table is in inches)

JT	TYPE	PLATES	W	LEN	Y	X
B	TMB1-I	MT20	3.0	4.0	1.50	2.50
C	TTWW+m	MT20	5.0	6.0	2.00	1.50
D	TMW+w	MT20	2.0	4.0		
E	TS-t	MT20	3.0	6.0		
F	TMWW-t	MT20	4.0	4.0		
G	TTWW+m	MT20	5.0	6.0	2.00	1.50
H	TMB1-I	MT20	3.0	4.0	1.50	2.50
J	BMW1+w	MT20	2.0	4.0		
K	BMWW1-t	MT20	4.0	4.0		
L	BS-t	MT20	3.0	6.0		
M	BMWWW1-t	MT20	4.0	6.0		
N	BMW1+w	MT20	2.0	4.0		

DIMENSIONS, SUPPORTS AND LOADINGS SPECIFIED BY FABRICATOR TO BE VERIFIED BY BUILDING DESIGNER

BEARINGS

JT	FACTORED GROSS REACTION VERT	HORZ	MAXIMUM FACTORED GROSS REACTION DOWN	HORZ	UPLIFT	INPUT BRG IN-SX	REQRD BRG IN-SX
B	177	0	177	0	-35	21-0-14 (9-1-2)	1-0-14
N	470	0	470	0	0	21-0-14 (9-1-2)	1-0-14
M	999	0	999	0	0	21-0-14 (9-1-2)	1-0-14
K	982	0	982	0	0	21-0-14 (9-1-2)	1-0-14
J	463	0	463	0	0	21-0-14 (9-1-2)	1-0-14
H	188	0	188	0	-35	21-0-14 (9-1-2)	1-0-14

VALUE IN PARENTHESIS INDICATES EFFECTIVE BEARING LENGTH

PROVIDE ANCHORAGE AT BEARING JOINT B FOR 150 LBS FACTORED UPLIFT
PROVIDE ANCHORAGE AT BEARING JOINT H FOR 150 LBS FACTORED UPLIFT

UNFACTORED REACTIONS

JT	1ST LCASE COMBINED	MAX /MIN. COMPONENT REACTIONS SNOW	LIVE	PERM.LIVE	WIND	DEAD	SOIL
B	103	128 / 0	0 / -21	0 / 0	0 / 0	0 / -4	0 / 0
N	405	199 / 0	114 / 0	0 / 0	0 / 0	92 / 0	0 / 0
M	772	519 / 0	128 / 0	0 / 0	0 / 0	126 / 0	0 / 0
K	761	508 / 0	128 / 0	0 / 0	0 / 0	125 / 0	0 / 0
J	400	195 / 0	114 / 0	0 / 0	0 / 0	91 / 0	0 / 0
H	111	135 / 0	0 / -21	0 / 0	0 / 0	0 / -3	0 / 0

BEARING MATERIAL TO BE SPF NO.2 OR BETTER AT JOINT(S) B, N, M, K, J, H

BRACING

TOP CHORD TO BE SHEATHED OR MAX. PURLIN SPACING = 6.25 FT.
MAX. UNBRACED BOTTOM CHORD LENGTH = 10.00 FT. OR RIGID CEILING DIRECTLY APPLIED.

ALL PITCH BREAKS AND PERIMETER CORNER JOINTS MUST BE LATERALLY RESTRAINED.

LOADING

TOTAL LOAD CASES: (4)

CHORDS

MEMB. FR-TO	MAX. FACTORED FORCE (LBS)	FACTORED VERT. LOAD LC1 (PLF) FROM	TO	MAX CSI (LC)	MAX. UNBRAC LENGTH
A- B	0 / 18	-122.2	-122.2	0.02 (1)	10.00
B- P	-9 / 89	-122.2	-122.2	0.04 (2)	10.00
P- C	-85 / 0	-122.2	-122.2	0.03 (2)	6.25
C- D	0 / 4	-122.2	-122.2	0.61 (1)	10.00
D- E	0 / 4	-122.2	-122.2	0.61 (1)	10.00
E- F	0 / 4	-122.2	-122.2	0.61 (1)	10.00
F- G	-22 / 2	-122.2	-122.2	0.61 (1)	6.25
G- R	-100 / 0	-122.2	-122.2	0.03 (2)	6.25
R- H	-25 / 88	-122.2	-122.2	0.04 (3)	6.25
H- I	0 / 18	-122.2	-122.2	0.02 (1)	10.00
B- O	-4 / 51	-28.0	-28.0	0.04 (1)	10.00
O- N	-4 / 51	-28.0	-28.0	0.17 (2)	10.00
N- M	-5 / 31	-28.0	-28.0	0.21 (2)	10.00
M- L	-2 / 22	-28.0	-28.0	0.21 (2)	10.00
L- K	-2 / 22	-28.0	-28.0	0.21 (2)	10.00
K- J	-4 / 42	-28.0	-28.0	0.21 (2)	10.00
J- Q	-4 / 62	-28.0	-28.0	0.17 (2)	10.00
Q- H	-4 / 62	-28.0	-28.0	0.05 (1)	10.00

WEBS

MEMB. FR-TO	MAX. FACTORED FORCE (LBS)	MAX CSI (LC)
N- C	-297 / 0	0.04 (1)
C- M	-36 / 2	0.03 (1)
M- D	-813 / 0	0.12 (1)
M- F	-27 / 0	0.02 (1)
K- F	-806 / 0	0.12 (1)
K- G	-21 / 3	0.01 (1)
J- G	-291 / 0	0.04 (1)
O- P	-182 / 0	0.00 (1)
Q- R	-180 / 0	0.00 (1)

DESIGN CRITERIA

SPECIFIED LOADS:

TOP CH.	LL =	38.3	PSF
	DL =	3.0	PSF
BOT CH.	LL =	10.5	PSF
	DL =	7.0	PSF
TOTAL LOAD	=	58.7	PSF

SPACING = 24.0 IN. C/C

LOADING IN FLAT SECTION BASED ON A SLOPE OF 6.00/12

THIS TRUSS IS DESIGNED FOR RESIDENTIAL OR SMALL BUILDING REQUIREMENTS OF PART 9, NBCC 2010

THIS DESIGN COMPLIES WITH:
- PART 9 OF OBC 2012 , BCBC 2012 , ABC 2014
- CSA 086-09
- TPIC 2011

(55 % OF 54.4 P.S.F. G.S.L. PLUS 8.4 P.S.F. RAIN LOAD) EQUALS 38.3 P.S.F. SPECIFIED ROOF LIVE LOAD

CSI: TC=0.61 (F-G:1) , BC=0.21 (J-K:2) , WB=0.12 (D-M:1) , SSI=0.35 (F-G:1)

DOL LUMBER=1.00 NAIL=1.00 LS BEND=1.10 COMP=1.10 SHEAR=1.10 TENS= 1.10

COMPANION LIVE LOAD FACTOR = 0.50

TRUSS PLATE MANUFACTURER IS NOT RESPONSIBLE FOR QUALITY CONTROL IN THE TRUSS MANUFACTURING PLANT .

NAIL VALUES

PLATE	GRIP(DRY) (PSI) MAX	MIN	SHEAR (PLI) MAX	MIN	SECTION (PLI) MAX	MIN
MT20	618	354	1667	822	2284	1656

PLATE PLACEMENT TOL. = 0.250 inches

PLATE ROTATION TOL. = 5.0 Deg.

JSI GRIP= 0.73 (M) (INPUT = 0.90)
JSI METAL= 0.15 (D) (INPUT = 1.00)

LICENSED PROFESSIONAL ENGINEER
9/1/17
S. KATSOULAKOS
PROVINCE OF ONTARIO

DWG NO. TAM45724-17
STRUCTURAL
COMPONENT ONLY

JOB NAME	TRUSS NAME	QUANTITY	PLY	JOB DESC. 42067	DRWG NO.
272820	P2	2	1	TRUSS DESC.	

Tamarack Roof Truss, Burlington

Version 8.030 S Oct 5 2016 MiTek Industries, Inc. Mon Sep 11 07:41:49 2017 Page 1

ID:ICtWqkzHJcrjayyEloEouzy77mm-lcuaEByIvra2tS2R_MvmO?trXE1vJanHDx2BFTyenWO

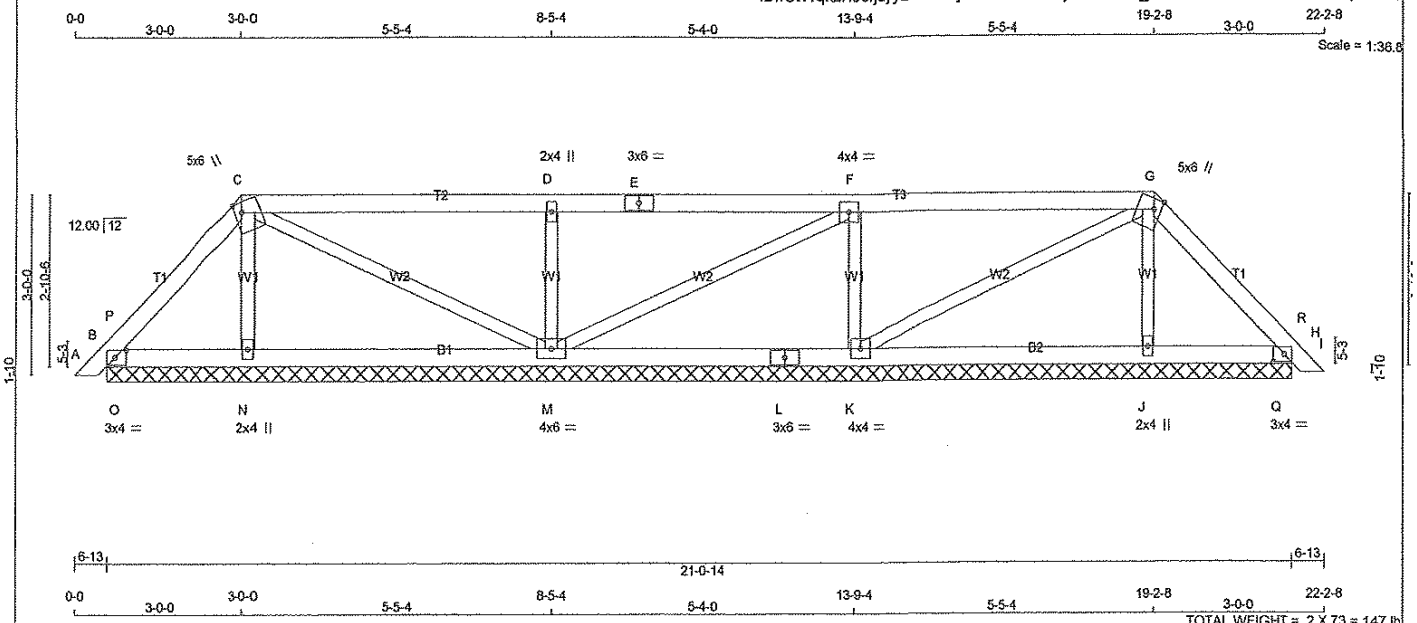

LUMBER

N. L. G. A. RULES

CHORDS	SIZE		LUMBER	DESCR.
A - C	2x4	DRY	No.2	SPF
C - E	2x4	DRY	No.2	SPF
E - G	2x4	DRY	No.2	SPF
G - I	2x4	DRY	No.2	SPF
B - L	2x4	DRY	No.2	SPF
L - H	2x4	DRY	No.2	SPF
ALL WEBS	2x3	DRY	No.2	SPF

DRY: SEASONED LUMBER.

PLATES (table is in inches)

JT	TYPE	PLATES	W	LEN	Y	X
B	TMB1-I	MT20	3.0	4.0	1.50	2.50
C	TTWW+m	MT20	5.0	6.0	2.00	1.50
D	TMW+w	MT20	2.0	4.0		
E	TS-t	MT20	3.0	6.0		
F	TMWW-t	MT20	4.0	4.0		
G	TTWW+m	MT20	5.0	6.0	2.00	1.50
H	TMB1-I	MT20	3.0	4.0	1.50	2.50
J	BMW1+w	MT20	2.0	4.0		
K	BMWW1-t	MT20	4.0	4.0		
L	BS-t	MT20	3.0	6.0		
M	BMWWW1-t	MT20	4.0	6.0		
N	BMW1+w	MT20	2.0	4.0		

DIMENSIONS, SUPPORTS AND LOADINGS SPECIFIED BY FABRICATOR TO BE VERIFIED BY BUILDING DESIGNER

BEARINGS

JT	FACTORED GROSS REACTION VERT	HORZ	MAXIMUM FACTORED GROSS REACTION DOWN	HORZ	UPLIFT	INPUT BRG IN-SX	REQRD BRG IN-SX
B	295	0	295	0	0	21-0-14 (9-1-2)	0-1-4
N	433	0	433	0	0	21-0-14 (9-1-2)	0-1-4
M	942	0	942	0	0	21-0-14 (9-1-2)	0-1-4
K	861	0	861	0	0	21-0-14 (9-1-2)	0-1-4
J	426	0	426	0	0	21-0-14 (9-1-2)	0-1-4
H	321	0	321	0	0	21-0-14 (9-1-2)	0-1-4

VALUE IN PARENTHESIS INDICATES EFFECTIVE BEARING LENGTH

UNFACTORED REACTIONS

JT	1ST LCASE COMBINED	MAX /MIN. COMPONENT REACTIONS SNOW	LIVE	PERM.LIVE	WIND	DEAD	SOIL
B	208	176 / 0	11 / 0	0 / 0	0 / 0	21 / 0	0 / 0
N	366	191 / 0	96 / 0	0 / 0	0 / 0	79 / 0	0 / 0
M	723	494 / 0	114 / 0	0 / 0	0 / 0	115 / 0	0 / 0
K	669	443 / 0	114 / 0	0 / 0	0 / 0	111 / 0	0 / 0
J	361	187 / 0	96 / 0	0 / 0	0 / 0	79 / 0	0 / 0
H	225	192 / 0	11 / 0	0 / 0	0 / 0	22 / 0	0 / 0

BEARING MATERIAL TO BE SPF NO.2 OR BETTER AT JOINT(S) B, N, M, K, J, H

BRACING

TOP CHORD TO BE SHEATHED OR MAX. PURLIN SPACING = 6.25 FT.
MAX. UNBRACED BOTTOM CHORD LENGTH = 10.00 FT. OR RIGID CEILING DIRECTLY APPLIED.

ALL PITCH BREAKS AND PERIMETER CORNER JOINTS MUST BE LATERALLY RESTRAINED.

LOADING

TOTAL LOAD CASES: (4)

CHORDS

MEMB. FR-TO	MAX. FACTORED FORCE (LBS)	FACTORED VERT. LOAD LC1 (PLF) FROM	TO	MAX CSI (LC)	MAX. UNBRAC LENGTH
A- B	0 / 18	-122.2	-122.2	0.02 (1)	10.00
B- P	0 / 12	-122.2	-122.2	0.05 (1)	10.00
P- C	-116 / 0	-122.2	-122.2	0.08 (1)	6.25
C- D	0 / 16	-122.2	-122.2	0.49 (1)	10.00
D- E	0 / 16	-122.2	-122.2	0.49 (1)	10.00
E- F	0 / 16	-122.2	-122.2	0.49 (1)	10.00
F- G	-48 / 0	-122.2	-122.2	0.48 (1)	6.25
G- R	-152 / 0	-122.2	-122.2	0.08 (1)	6.25
R- H	-32 / 10	-122.2	-122.2	0.05 (1)	6.25
H- I	0 / 18	-122.2	-122.2	0.02 (1)	10.00
B- O	0 / 74	-28.0	-28.0	0.09 (1)	10.00
O- N	0 / 74	-28.0	-28.0	0.13 (2)	10.00
N- M	0 / 63	-28.0	-28.0	0.17 (2)	10.00
M- L	0 / 48	-28.0	-28.0	0.17 (2)	10.00
L- K	0 / 48	-28.0	-28.0	0.17 (2)	10.00
K- J	0 / 88	-28.0	-28.0	0.17 (2)	10.00
J- Q	0 / 99	-28.0	-28.0	0.13 (2)	10.00
Q- H	0 / 99	-28.0	-28.0	0.09 (1)	10.00

WEBS

MEMB. FR-TO	MAX. FACTORED FORCE (LBS)	MAX CSI (LC)
N- C	-276 / 0	0.05 (1)
C- M	-87 / 0	0.05 (1)
M- D	-723 / 0	0.12 (1)
M- F	-71 / 0	0.04 (1)
K- F	-692 / 0	0.12 (1)
K- G	-44 / 0	0.03 (1)
J- G	-270 / 0	0.05 (1)
O- P	-300 / 0	0.00 (1)
Q- R	-295 / 0	0.00 (1)

DWG NO. TAM 45745-17
STRUCTURAL
COMPONENT ONLY

[M]

DESIGN CRITERIA

SPECIFIED LOADS:

TOP CH.	LL	=	38.3	PSF
	DL	=	3.0	PSF
BOT CH.	LL	=	10.5	PSF
	DL	=	7.0	PSF
TOTAL LOAD		=	58.7	PSF

SPACING = 24.0 IN. C/C

LOADING IN FLAT SECTION BASED ON A SLOPE OF 6.00/12

THIS TRUSS IS DESIGNED FOR RESIDENTIAL OR SMALL BUILDING REQUIREMENTS OF PART 9, NBCC 2010

THIS DESIGN COMPLIES WITH:
- PART 9 OF OBC 2012 , BCBC 2012 , ABC 2014
- CSA 086-09
- TPIC 2011

(55 % OF 54.4 P.S.F. G.S.L. PLUS 8.4 P.S.F. RAIN LOAD) EQUALS 38.3 P.S.F. SPECIFIED ROOF LIVE LOAD

CSI: TC=0.49 (D-F:1) , BC=0.17 (J-K:2) , WB=0.12 (D-M:1) , SSI=0.31 (F-G:1)

DOL LUMBER=1.00 NAIL=1.00 LS BEND=1.10 COMP=1.10 SHEAR=1.10 TENS= 1.10

COMPANION LIVE LOAD FACTOR = 0.50

TRUSS PLATE MANUFACTURER IS NOT RESPONSIBLE FOR QUALITY CONTROL IN THE TRUSS MANUFACTURING PLANT .

NAIL VALUES

PLATE	GRIP(DRY) (PSI) MAX	MIN	SHEAR (PLI) MAX	MIN	SECTION (PLI) MAX	MIN
MT20	618	354	1667	822	2284	1656

PLATE PLACEMENT TOL. = 0.250 inches

PLATE ROTATION TOL. = 5.0 Deg.

JSI GRIP= 0.84 (C) (INPUT = 0.90)
JSI METAL= 0.13 (D) (INPUT = 1.00)

LICENSED PROFESSIONAL ENGINEER
9/11/17
S. KATSOULAKOS
PROVINCE OF ONTARIO

JOB NAME	TRUSS NAME	QUANTITY	PLY	JOB DESC. 42067	DRWG NO.
272820	P3	3	1	TRUSS DESC.	

Tamarack Roof Truss, Burlington

Version 8.030 S Oct 5 2016 MiTek Industries, Inc. Mon Sep 11 07:41:49 2017 Page 1

ID:ICtWqkzHJcrjayyEloEouzy77mm-IcuaEBylvra2tS2R_MvmO?ttHE1?JZPHDx2BFTyenW0

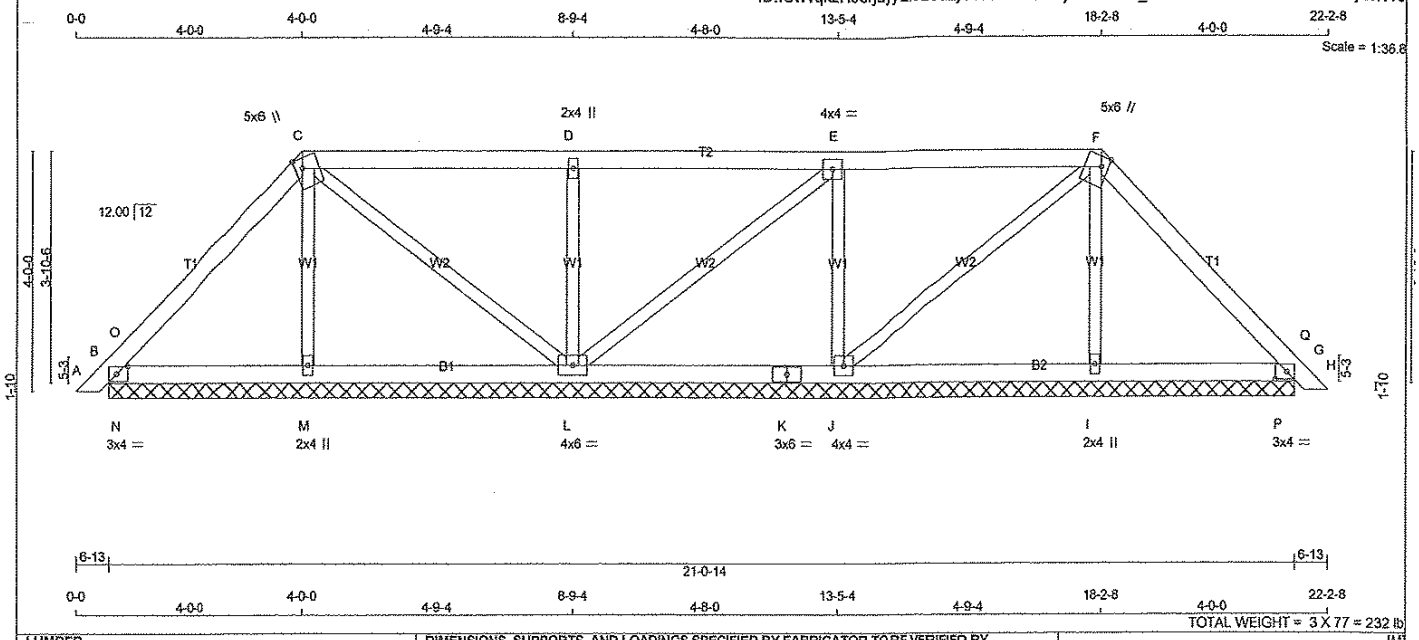

TOTAL WEIGHT = 3 X 77 = 232 lb

[M]

LUMBER

N. L. G. A. RULES

CHORDS	SIZE		LUMBER	DESCR.
A - C	2x4	DRY	No.2	SPF
C - F	2x4	DRY	No.2	SPF
F - H	2x4	DRY	No.2	SPF
B - K	2x4	DRY	No.2	SPF
K - G	2x4	DRY	No.2	SPF
ALL WEBS	2x3	DRY	No.2	SPF

DRY: SEASONED LUMBER.

PLATES (table is in inches)

JT	TYPE	PLATES	W	LEN	Y	X
B	TMB1-I	MT20	3.0	4.0	1.50	2.50
C	TTWW+m	MT20	5.0	6.0	2.00	1.50
D	TMW+w	MT20	2.0	4.0		
E	TMWW-t	MT20	4.0	4.0		
F	TTWW+m	MT20	5.0	6.0	2.00	1.50
G	TMB1-I	MT20	3.0	4.0	1.50	2.50
I	BMW1+w	MT20	2.0	4.0		
J	BMWW1-t	MT20	4.0	4.0		
K	BS-t	MT20	3.0	6.0		
L	BMWWW1-t	MT20	4.0	6.0		
M	BMW1+w	MT20	2.0	4.0		

DIMENSIONS, SUPPORTS AND LOADINGS SPECIFIED BY FABRICATOR TO BE VERIFIED BY BUILDING DESIGNER

BEARINGS

JT	FACTORED GROSS REACTION VERT	HORZ	MAXIMUM FACTORED GROSS REACTION DOWN	HORZ	UPLIFT	INPUT BRG IN-SX	REQRD BRG IN-SX
B	403	0	403	0	0	21-0-14 (9-1-2)	1-0-14
M	393	0	393	0	0	21-0-14 (9-1-2)	1-0-14
L	919	0	919	0	0	21-0-14 (9-1-2)	1-0-14
J	725	0	725	0	0	21-0-14 (9-1-2)	1-0-14
I	393	0	393	0	0	21-0-14 (9-1-2)	1-0-14
G	446	0	446	0	0	21-0-14 (9-1-2)	1-0-14

VALUE IN PARENTHESIS INDICATES EFFECTIVE BEARING LENGTH

UNFACTORED REACTIONS

JT	1ST LCASE COMBINED	MAX./MIN. COMPONENT REACTIONS SNOW	LIVE	PERM.LIVE	WIND	DEAD	SOIL
B	296	228 / 0	31 / 0	0 / 0	0 / 0	39 / 0	0 / 0
M	334	171 / 0	90 / 0	0 / 0	0 / 0	73 / 0	0 / 0
L	697	492 / 0	100 / 0	0 / 0	0 / 0	105 / 0	0 / 0
J	566	370 / 0	100 / 0	0 / 0	0 / 0	96 / 0	0 / 0
I	334	171 / 0	90 / 0	0 / 0	0 / 0	73 / 0	0 / 0
G	325	253 / 0	31 / 0	0 / 0	0 / 0	41 / 0	0 / 0

BEARING MATERIAL TO BE SPF NO.2 OR BETTER AT JOINT(S) B, M, L, J, I, G

BRACING

TOP CHORD TO BE SHEATHED OR MAX. PURLIN SPACING = 6.25 FT.
MAX. UNBRACED BOTTOM CHORD LENGTH = 10.00 FT. OR RIGID CEILING DIRECTLY APPLIED.

ALL PITCH BREAKS AND PERIMETER CORNER JOINTS MUST BE LATERALLY RESTRAINED.

LOADING

TOTAL LOAD CASES: (4)

CHORDS

MEMB. FR-TO	MAX. FACTORED FORCE (LBS)	FACTORED VERT. LOAD LC1 (PLF) FROM	TO	MAX CSI (LC)	MAX. UNBRAC LENGTH
A- B	0 / 18	-122.2	-122.2	0.02 (1)	10.00
B- O	-68 / 92	-122.2	-122.2	0.11 (1)	6.25
O- C	-161 / 0	-122.2	-122.2	0.17 (1)	6.25
C- D	-5 / 17	-122.2	-122.2	0.37 (1)	10.00
D- E	-5 / 17	-122.2	-122.2	0.37 (1)	10.00
E- F	-81 / 0	-122.2	-122.2	0.37 (1)	6.25
F- Q	-220 / 0	-122.2	-122.2	0.17 (1)	6.25
Q- G	-72 / 26	-122.2	-122.2	0.10 (1)	6.25
G- H	0 / 18	-122.2	-122.2	0.02 (1)	10.00
B- N	0 / 103	-28.0	-28.0	0.16 (1)	10.00
N- M	0 / 103	-28.0	-28.0	0.16 (1)	10.00
M- L	0 / 97	-28.0	-28.0	0.13 (2)	10.00
L- K	0 / 82	-28.0	-28.0	0.13 (2)	10.00
K- J	0 / 82	-28.0	-28.0	0.13 (2)	10.00
J- I	0 / 138	-28.0	-28.0	0.13 (2)	10.00
I- P	0 / 144	-28.0	-28.0	0.16 (1)	10.00
P- G	0 / 144	-28.0	-28.0	0.16 (1)	10.00

WEBS

MEMB. FR-TO	MAX. FACTORED FORCE (LBS)	MAX CSI (LC)
M- C	-222 / 0	0.05 (1)
C- L	-142 / 0	0.08 (1)
L- D	-634 / 0	0.15 (1)
L- E	-124 / 0	0.07 (1)
J- E	-558 / 0	0.13 (1)
J- F	-70 / 0	0.04 (1)
I- F	-224 / 0	0.05 (1)
N- O	-521 / 49	0.00 (1)
P- Q	-512 / 49	0.00 (1)

DESIGN CRITERIA

SPECIFIED LOADS:

TOP CH.	LL	=	38.3	PSF
	DL	=	3.0	PSF
BOT CH.	LL	=	10.5	PSF
	DL	=	7.0	PSF
TOTAL LOAD		=	58.7	PSF

SPACING = 24.0 IN. C/C

LOADING IN FLAT SECTION BASED ON A SLOPE OF 6.00/12

THIS TRUSS IS DESIGNED FOR RESIDENTIAL OR SMALL BUILDING REQUIREMENTS OF PART 9, NBCC 2010

THIS DESIGN COMPLIES WITH:
- PART 9 OF OBC 2012 , BCBC 2012 , ABC 2014
- CSA 086-09
- TPIC 2011

(55 % OF 54.4 P.S.F. G.S.L. PLUS 8.4 P.S.F. RAIN LOAD) EQUALS 38.3 P.S.F. SPECIFIED ROOF LIVE LOAD

CSI: TC=0.37 (D-E:1) , BC=0.16 (I-P:1) , WB=0.15 (D-L:1) , SSI=0.41 (B-N:1)

DOL LUMBER=1.00 NAIL=1.00 LS BEND=1.10 COMP=1.10 SHEAR=1.10 TENS= 1.10

COMPANION LIVE LOAD FACTOR = 0.50

TRUSS PLATE MANUFACTURER IS NOT RESPONSIBLE FOR QUALITY CONTROL IN THE TRUSS MANUFACTURING PLANT .

NAIL VALUES

PLATE	GRIP(DRY) (PSI) MAX	MIN	SHEAR (PLI) MAX	MIN	SECTION (PLI) MAX	MIN
MT20	618	354	1667	822	2284	1656

PLATE PLACEMENT TOL. = 0.250 inches

PLATE ROTATION TOL. = 5.0 Deg.

JSI GRIP= 0.59 (L) (INPUT = 0.90)
JSI METAL= 0.12 (D) (INPUT = 1.00)

LICENSED PROFESSIONAL ENGINEER
9162
S. KATSOULAKOS
PROVINCE OF ONTARIO

DWG NO. TAM 45746-17
STRUCTURAL
COMPONENT ONLY

JOB NAME	TRUSS NAME	QUANTITY	PLY	JOB DESC. 42067	DRWG NO.
272820	P4	5	1	TRUSS DESC.	

Tamarack Roof Truss, Burlington

Version 8.030 S Oct 5 2016 MiTek Industries, Inc. Mon Sep 11 07:41:50 2017 Page 1

ID:ICtWqkzHJcrjayyEloEouzy77mm-DoSyRXzNg9ivVcdeY4Q?xCQ6OeOE22yRSbolnvyenW?

Scale = 1:18.1

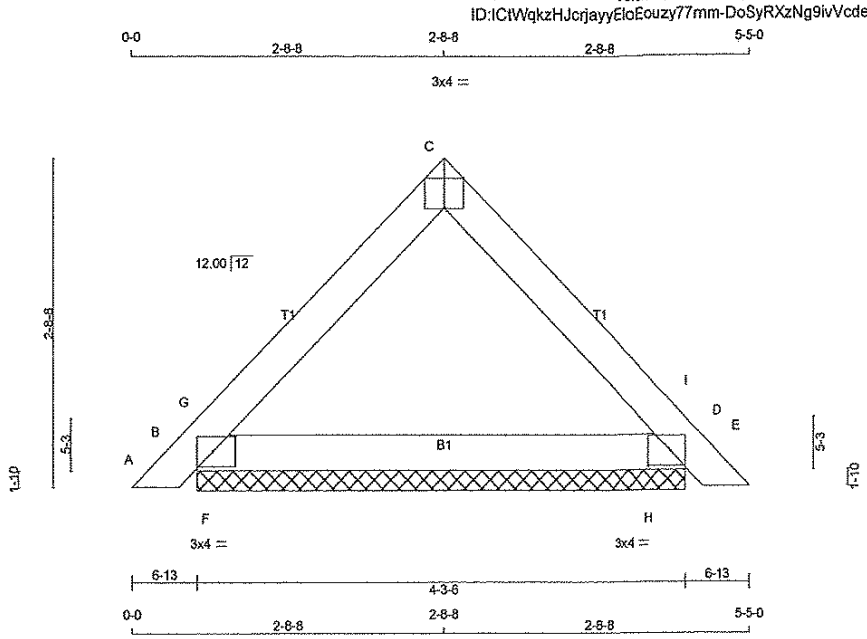

TOTAL WEIGHT = 5 X 14 = 68 lb

LUMBER

N. L. G. A. RULES

CHORDS	SIZE		LUMBER	DESCR.
A - C	2x4	DRY	No.2	SPF
C - E	2x4	DRY	No.2	SPF
B - D	2x4	DRY	No.2	SPF

DRY: SEASONED LUMBER.

PLATES (table is in inches)

JT	TYPE	PLATES	W	LEN	Y	X
B	TMB1-I	MT20	3.0	4.0	1.50	2.50
C	TT-p	MT20	3.0	4.0	Edge	2.00
D	TMB1-I	MT20	3.0	4.0	1.50	2.50

Edge - INDICATES REFERENCE CORNER OF PLATE TOUCHES EDGE OF CHORD.

DIMENSIONS, SUPPORTS AND LOADINGS SPECIFIED BY FABRICATOR TO BE VERIFIED BY BUILDING DESIGNER

BEARINGS

JT	FACTORED GROSS REACTION VERT	HORZ	MAXIMUM FACTORED GROSS REACTION DOWN	HORZ	UPLIFT	INPUT BRG IN-SX	REQRD BRG IN-SX
B	378	0	378	0	0	4-3-6	4-3-6
D	378	0	378	0	0	4-3-6	4-3-6

UNFACTORED REACTIONS

JT	1ST LCASE COMBINED	MAX./MIN. COMPONENT REACTIONS SNOW	LIVE	PERM.LIVE	WIND	DEAD	SOIL
B	290	199 / 0	45 / 0	0 / 0	0 / 0	46 / 0	0 / 0
D	290	199 / 0	45 / 0	0 / 0	0 / 0	46 / 0	0 / 0

BEARING MATERIAL TO BE SPF NO.2 OR BETTER AT JOINT(S) B, D

BRACING

TOP CHORD TO BE SHEATHED OR MAX. PURLIN SPACING = 6.25 FT.
MAX. UNBRACED BOTTOM CHORD LENGTH = 10.00 FT. OR RIGID CEILING DIRECTLY APPLIED.

ALL PITCH BREAKS AND PERIMETER CORNER JOINTS MUST BE LATERALLY RESTRAINED.

LOADING

TOTAL LOAD CASES: (4)

CHORDS

MEMB. FR-TO	MAX. FACTORED FORCE (LBS)	FACTORED VERT. LOAD (PLF) FROM	TO	LC1	MAX CSI (LC)	MAX. UNBRAC LENGTH
A- B	0 / 18	-122.2	-122.2	0.02 (1)	10.00	
B- G	-316 / 0	-122.2	-122.2	0.07 (3)	6.25	
G- C	-176 / 0	-122.2	-122.2	0.09 (1)	6.25	
C- I	-176 / 0	-122.2	-122.2	0.09 (1)	6.25	
I- D	-316 / 0	-122.2	-122.2	0.07 (3)	6.25	
D- E	0 / 18	-122.2	-122.2	0.02 (1)	10.00	
B- F	0 / 130	-28.0	-28.0	0.05 (3)	10.00	
F- H	0 / 130	-28.0	-28.0	0.10 (2)	10.00	
H- D	0 / 130	-28.0	-28.0	0.05 (3)	10.00	

WEBS

MEMB. FR-TO	MAX. FACTORED FORCE (LBS)	MAX CSI (LC)
F- G	0 / 265	0.00 (1)
H- I	0 / 265	0.00 (1)

DESIGN CRITERIA

SPECIFIED LOADS:

TOP CH.	LL	=	38.3	PSF
	DL	=	3.0	PSF
BOT CH.	LL	=	10.5	PSF
	DL	=	7.0	PSF
TOTAL LOAD		=	58.7	PSF

SPACING = 24.0 IN. C/C

THIS TRUSS IS DESIGNED FOR RESIDENTIAL OR SMALL BUILDING REQUIREMENTS OF PART 9, NBCC 2010

THIS DESIGN COMPLIES WITH:
- PART 9 OF OBC 2012 , BCBC 2012 , ABC 2014
- CSA 086-09
- TPIC 2011

(55 % OF 54.4 P.S.F. G.S.L. PLUS 8.4 P.S.F. RAIN LOAD) EQUALS 38.3 P.S.F. SPECIFIED ROOF LIVE LOAD

CSI: TC=0.09 (C-G:1) , BC=0.10 (F-H:2) , WB=0.00 (F-G:1) , SSI=0.13 (D-H:3)

DOL LUMBER=1.00 NAIL=1.00 LS BEND=1.10 COMP=1.10 SHEAR=1.10 TENS= 1.10

COMPANION LIVE LOAD FACTOR = 0.50

TRUSS PLATE MANUFACTURER IS NOT RESPONSIBLE FOR QUALITY CONTROL IN THE TRUSS MANUFACTURING PLANT .

NAIL VALUES

PLATE	GRIP(DRY) (PSI) MAX	MIN	SHEAR (PLI) MAX	MIN	SECTION (PLI) MAX	MIN
MT20	618	354	1667	822	2284	1656

PLATE PLACEMENT TOL. = 0.250 inches

PLATE ROTATION TOL. = 5.0 Deg.

JSI GRIP= 0.31 (B) (INPUT = 0.90)
JSI METAL= 0.08 (D) (INPUT = 1.00)

LICENSED PROFESSIONAL ENGINEER
9/11/17
S. KATSOULAKOS
PROVINCE OF ONTARIO

DWG NO. TAM 45747-17
STRUCTURAL
COMPONENT ONLY

MICRO CITY
ENGINEERING SERVICES INC.

TEL: (519) 287 - 2242

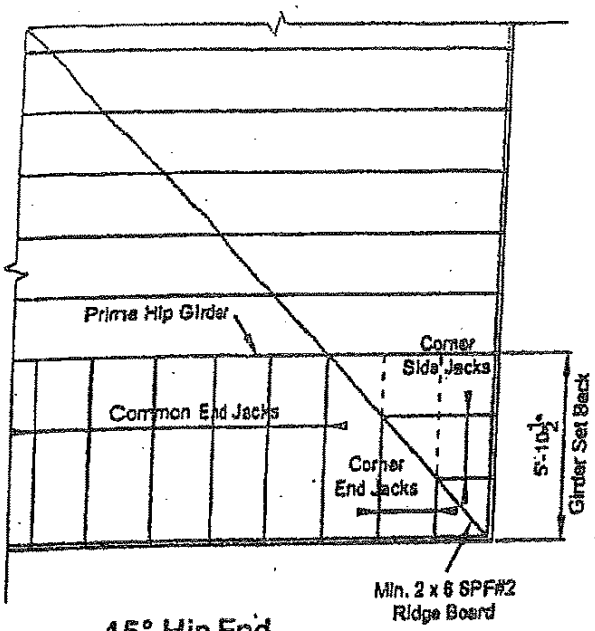

45° Hip End

LUMBER SPECIFICATION

TOP CHORD : 2 x 4 SPF#2

BOTTOM CHORD : 2 x 4 SPF#2

WEBS : 2 x 3 SPF#2

UNLESS OTHERWISE SHOWN

DESIGN LOAD:

TOP CHORD LIVE LOAD	:	34.8 P.S.F.
TOP CHORD DEAD LOAD	:	3.0 P.S.F.
BOTTOM CHORD LIVE LOAD	:	0.0 P.S.F.
BOTTOM CHORD DEAD LOAD	:	7.0 P.S.F.
TOTAL LOAD	:	44.8 P.S.F.

DWG NO TAN 3495.14 R1
STRUCTURAL COMPONENT ONLY

LICENSED PROFESSIONAL ENGINEER
1-2-14
S. KATSOULAKOS
PROVINCE OF ONTARIO

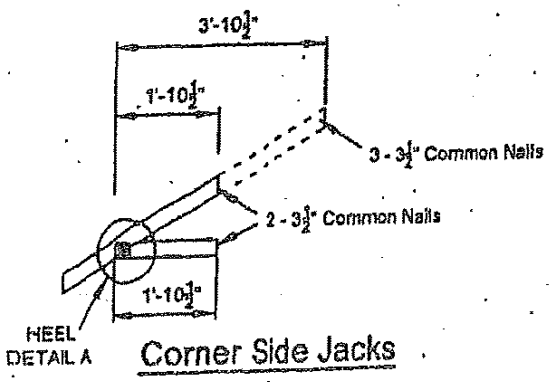

Corner Side Jacks

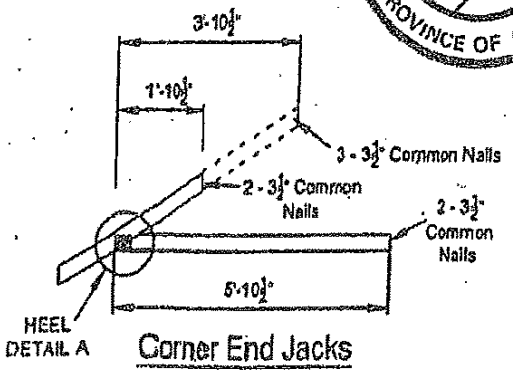

Corner End Jacks

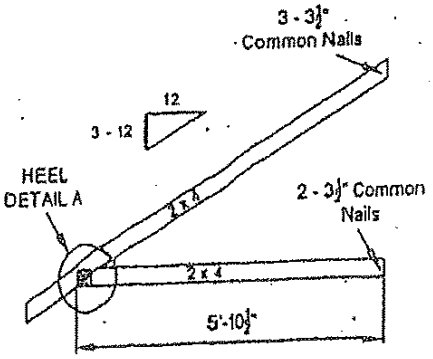

Common End Jacks

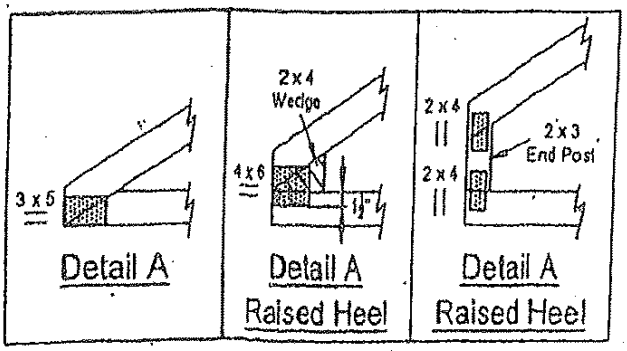

NOTE: DESIGN CONFORMS TO PART 9, O.B.C. 2012 (LIMIT STATES DESIGN)
(TO BE INCLUDED AND USED AS PART OF A FULL TRUSS ENGINEERING PACKAGE)

MICRO CITY ENGINEERING SERVICES INC.

TEL: (519) 287 - 2242

R.R. #1, P.O. BOX 61, GLENCOE, ONTARIO, N0L 1M0

LUMBER SPECIFICATION

TOP CHORD : 2 x 4 SPF#2
BOTTOM CHORD : 2 x 4 SPF#2
WEBS : 2 x 3 SPF#2
UNLESS OTHERWISE SHOWN

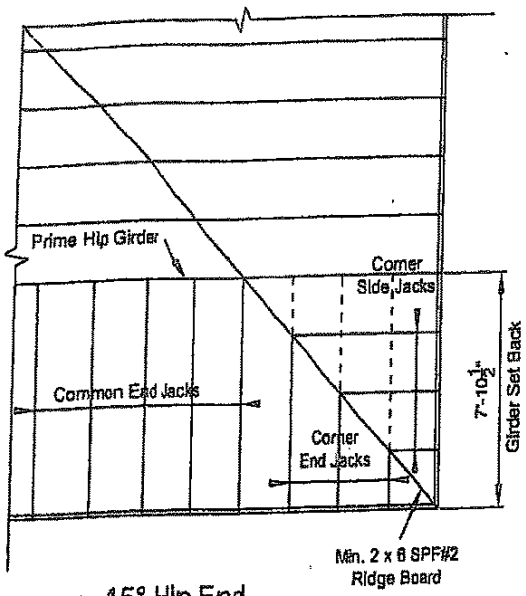

45° Hip End

DESIGN LOAD:

TOP CHORD LIVE LOAD	: 34.8 P.S.F.
TOP CHORD DEAD LOAD	: 3.0 P.S.F.
BOTTOM CHORD LIVE LOAD	: 0.0 P.S.F.
BOTTOM CHORD DEAD LOAD	: 7.0 P.S.F.
TOTAL LOAD	: 44.8 P.S.F.

DWG NO TAM 3503.14
STRUCTURAL COMPONENT ONLY

LICENSED PROFESSIONAL ENGINEER
1-2014
S. KATSOULAKOS
PROVINCE OF ONTARIO

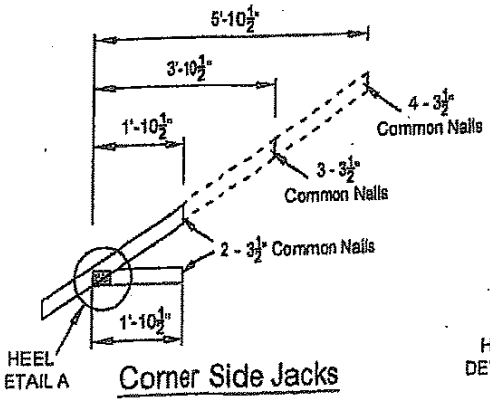

Corner Side Jacks

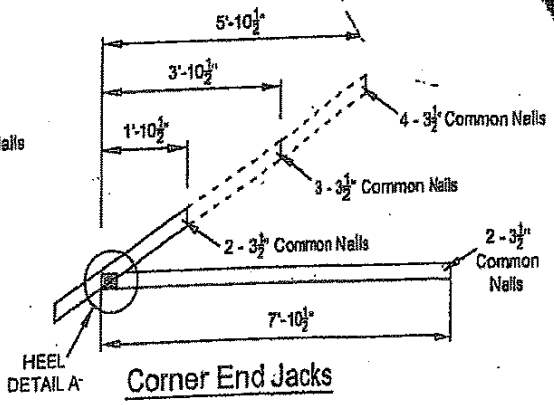

Corner End Jacks

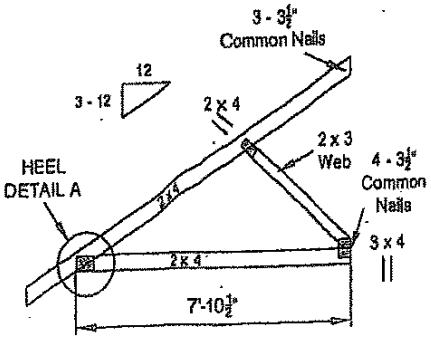

Common End Jacks

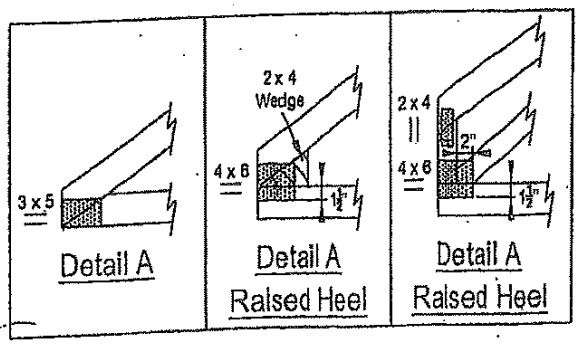

NOTE: DESIGN CONFORMS TO PART 9, O.B.C. 2012 (LIMIT STATES DESIGN)
(TO BE INCLUDED AND USED AS PART OF A FULL TRUSS ENGINEERING PACKAGE)

ONTARIO WOOD TRUSS
FABRICATORS ASSOCIATION

TECH-NOTES

TN 15-001
Piggyback Bracing

Overview:

Where piggybacks are connected overtop of base trusses, 2x4 purlins must be first added to the flat portion of the base truss at a spacing no more than 24" o/c. These purlins not only provide support for the piggyback trusses above, but are required to laterally support the top chord of the base truss which will not have the sheathing directly connected to the flat portion of the base truss. This ensures the top chord, most often in compression, will not buckle laterally.

Further, the purlins in the plane of the flat portion require diagonal bracing to prevent lateral displacement of the purlins themselves where under certain conditions, the trusses may in fact all buckle in the same direction if this additional bracing is not added in the plane of the purlins.

Detail:

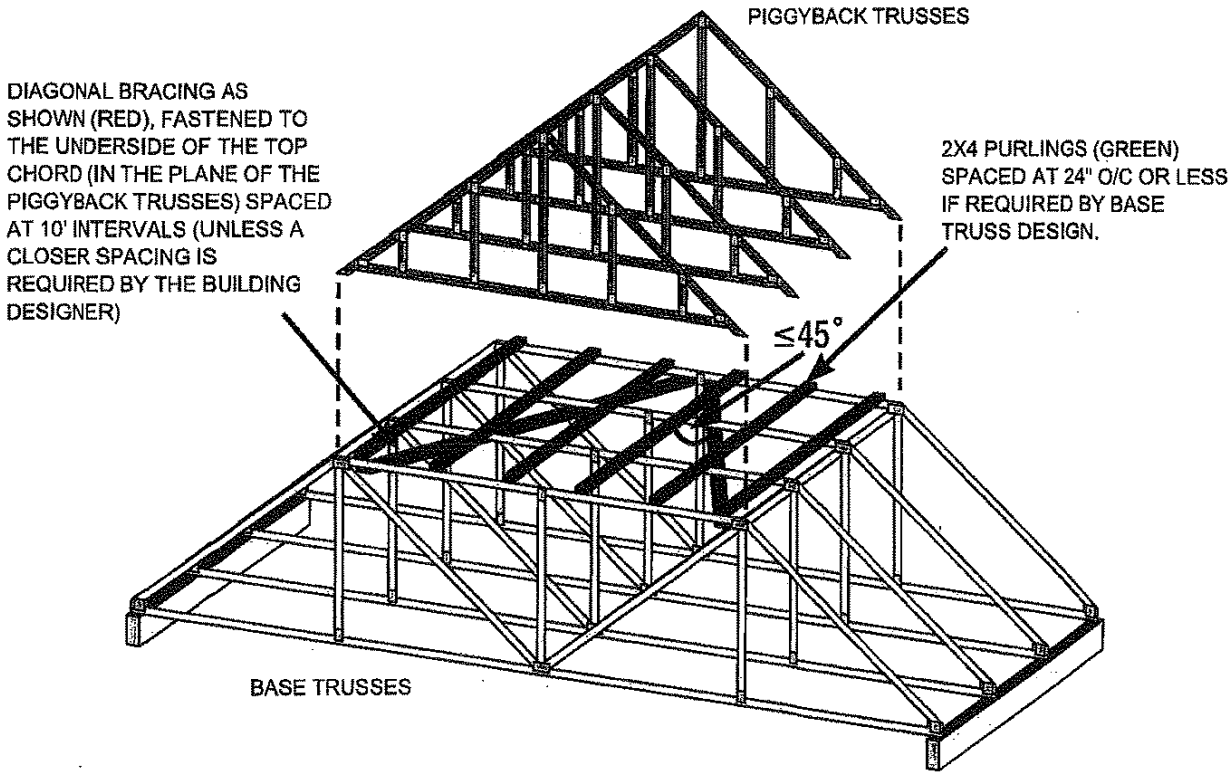

NOTE: THE SLOPED PORTION OF THE TOP CHORD OF THE BASE TRUSS AND PIGGYBACK TRUSS IN THIS SKETCH IS ASSUMED TO BE SHEATHED IN ACCORDANCE WITH THE OBC.

SKETCH FROM BCSI-CANADA 2013

Disclaimer:

OWTFA Tech Notes are intended to provide guidance to the design community both within the membership as well as to third party designers who might benefit from the information. The details have been developed by the OWTFA technical committee and although there may be professional engineers involved in development, the information contained in the tech-note are not intended to be used without having a professional engineer review the information for a specific application. The OWTFA takes no responsibility with respect to the information provided but has developed this tech-note to offer guidance where it is not currently readily available.

FACE MOUNT HANGERS

SIMPSON Strong-Tie®

These products are available with additional corrosion protection. Additional products on this page may also be available with this option, check with Simpson Strong-Tie for details.

These products are approved for installation with the Strong-Drive® SD Connector screw. See page 24 for more information.

Model No.	Ga	Dimensions (in) W	H	B	d_g[3]	Fasteners Header	Joist	Factored Resistance D.Fir-L Uplift (K_D = 1.15) lbs / kN	D.Fir-L Normal (K_D = 1.00) lbs / kN	S-P-F Uplift (K_D = 1.15) lbs / kN	S-P-F Normal (K_D = 1.00) lbs / kN
DOUBLE 2x SIZES											
LUS24-2	18	3⅛	3⅛	2	1½	4-16d	2-16d	835 / 3.71	2020 / 8.99	590 / 2.62	1435 / 6.38
LUS26-2	18	3⅛	4⅞	2	4	4-16d	4-16d	1720 / 7.65	2595 / 11.54	1545 / 6.87	1920 / 8.54
HHUS26-2	14	3¹⁄₁₆	5⅝	3	3¹³⁄₁₆	14-16d	6-16d	2850 / 12.68	7335 / 32.63	2065 / 9.20	5205 / 23.15
HGUS26-2	12	3⁹⁄₁₆	5⁷⁄₁₆	4	4⅛	20-16d	8-16d	4385 / 19.51	8950 / 39.81	3110 / 13.83	6355 / 28.27
LUS28-2	18	3⅛	7	2	4	6-16d	4-16d	1720 / 7.65	3325 / 14.79	1545 / 6.87	2575 / 11.45
HHUS28-2	14	3¹⁄₁₆	7⁹⁄₁₆	3	6⅛	22-16d	8-16d	3765 / 16.75	8940 / 39.77	2675 / 11.90	6345 / 28.22
HGUS28-2	12	3⁹⁄₁₆	7⁹⁄₁₆	4	6⅛	36-16d	12-16d	6070 / 27.00	12980 / 57.74	4310 / 19.17	9215 / 40.99
LUS210-2	18	3⅛	9	2	6	8-16d	6-16d	2580 / 11.48	4500 / 20.02	2320 / 10.32	3195 / 14.21
HHUS210-2	14	3¹⁄₁₆	9⁹⁄₁₆	3	8	30-16d	10-16d	4745 / 21.11	9660 / 42.97	4310 / 19.17	7000 / 31.14
HGUS210-2	12	3¹⁄₁₆	9⁹⁄₁₆	4	8⅛	46-16d	16-16d	6840 / 30.43	14645 / 65.14	4855 / 21.60	10400 / 46.26
TRIPLE 2x SIZES											
HGUS26-3	12	4¹⁵⁄₁₆	5½	4	4⅛	20-16d	8-16d	4385 / 19.51	8950 / 39.81	3110 / 13.83	6355 / 28.27
HGUS28-3	12	4¹⁵⁄₁₆	7¼	4	6⅛	36-16d	12-16d	6070 / 27.00	12980 / 57.74	4310 / 19.17	9215 / 40.99
HHUS210-3	14	4¹¹⁄₁₆	9	3	7¹³⁄₁₆	30-16d	10-16d	4745 / 21.11	10545 / 46.91	4310 / 19.17	7485 / 33.29
HGUS210-3	12	4¹⁵⁄₁₆	9¼	4	8⅜	46-16d	16-16d	6840 / 30.43	14645 / 65.14	4855 / 21.60	10400 / 46.26
QUADRUPLE 2x SIZES											
HGUS26-4	12	6⁹⁄₁₆	5⁷⁄₁₆	4	4⅛	20-16d	8-16d	4385 / 19.51	8950 / 39.81	3110 / 13.83	6355 / 28.27
HGUS28-4	12	6⁹⁄₁₆	7³⁄₁₆	4	6⅛	36-16d	12-16d	6070 / 27.00	12980 / 57.74	4310 / 19.17	9215 / 40.99
HHUS210-4	14	6⅛	8⅞	3	7¹³⁄₁₆	30-16d	10-16d	4745 / 21.11	10545 / 46.91	4310 / 19.17	7485 / 33.29
HGUS210-4	12	6⁹⁄₁₆	9⁹⁄₁₆	4	8⅛	46-16d	16-16d	6840 / 30.43	14645 / 65.14	4855 / 21.60	10400 / 46.26
HGUS212-4	12	6⁹⁄₁₆	10⅝	4	10⅛	56-16d	20-16d	7640 / 33.98	14995 / 66.70	5425 / 24.13	10645 / 47.35
HGUS214-4	12	6⁹⁄₁₆	12⅝	4	11⅞	66-16d	22-16d	10130 / 45.06	16400 / 72.95	7195 / 32.00	11645 / 51.80
4x SIZES											
LUS46	18	3⁹⁄₁₆	4¾	2	3⁷⁄₁₆	4-16d	4-16d	1720 / 7.65	2595 / 11.54	1545 / 6.87	1920 / 8.54
HHUS46	14	3⅝	5¼	3	3¹³⁄₁₆	14-16d	6-16d	2540 / 11.30	7335 / 32.63	2065 / 9.20	5205 / 23.15
HGUS46	12	3¾	5¼	4	4⅛	20-16d	8-16d	4385 / 19.51	8950 / 39.81	3110 / 13.83	6355 / 28.27
LUS48	18	3⅛	6¾	2	3⅛	6-16d	4-16d	1720 / 7.65	3325 / 14.79	1545 / 6.87	2575 / 11.45
HHUS48	14	3⅝	7⅛	3	6⅛	22-16d	8-16d	3765 / 16.75	8940 / 39.77	2675 / 11.90	6345 / 28.22
HGUS48	12	3¾	7⅛	4	6⅛	36-16d	12-16d	6070 / 27.00	12980 / 57.74	4310 / 19.17	9215 / 40.99
LUS410	18	3⁹⁄₁₆	8¾	2	5⁹⁄₁₆	8-16d	6-16d	2580 / 11.48	4500 / 20.02	2320 / 10.32	3195 / 14.21
HGUS410	12	3⅝	9	4	8⅛	46-16d	16-16d	6840 / 30.43	14645 / 65.14	4855 / 21.60	10400 / 46.26
HGUS412	12	3⅝	10⅞	4	10⅛	56-16d	20-16d	7640 / 33.98	14995 / 66.70	5425 / 24.13	10645 / 47.35
HGUS414	12	3⅝	12⅞	4	11⅞	66-16d	22-16d	10130 / 45.06	16400 / 72.95	7195 / 32.00	11645 / 51.80

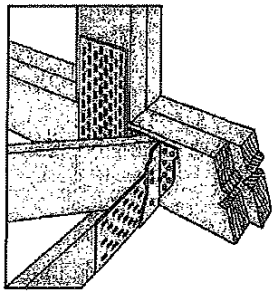

Typical HUS26 Installation
(Truss Designer to provide fastener quantity for connecting multiple members together)

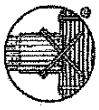

Double Shear Nailing Top View

Double Shear Nailing Side View Do not bend tab back

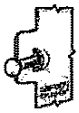

Dome Double Shear Nailing prevents tabs breaking off *(available on some models)*

U.S. Patent 6,085,488

LICENSED PROFESSIONAL ENGINEER
1/21/15
G. V. LUBARSKY
100044463
PROVINCE OF ONTARIO

1. Factored uplift resistances have been increased 15% for wind or earthquake loading; no further increase is allowed.
2. Designer must ensure that hanger is compatible with truss when reduced heel height is used.
3. d_g is the distance from the bearing seat to the top joist nail.
4. Resistances shown require a minimum 2-ply girder truss. For fastening to single-ply truss request technical bulletin T-N10FORTRUSS and/or see installation notes.
5. NAILS: 16d = 0.162" dia. x 3½" long. See pages 22-23 for other nail sizes and information.

Catalogue C-C-CAN2015 © 2015 SIMPSON STRONG-TIE COMPANY INC.

LUL/LUS/LJS/HUS/HHUS/HGUS *Standard & Double Shear Joist Hangers*

SIMPSON Strong-Tie

VALUE ENGINEERED

This product is preferable to similar connectors because of a) easier installation, b) higher capacities, c) lower installed cost, or a combination of these features.

Most hangers in this series have double shear nailing – an innovation that distributes the load through two points on each joist nail for greater strength. This allows for fewer nails, faster installation, and the use of all common nails for the same connection. *(Do not bend or remove tabs)*

Double shear hangers range from the light capacity LUS hangers to the highest capacity HGUS hangers. For medium load truss applications, the HUS offers a lower cost alternative and easier installation than the HGUS hangers, while providing greater load capacity and bearing than the LUS.

MATERIAL: See tables below and on page 155

FINISH: Galvanized. Some products available in stainless steel or ZMAX® coating; see Corrosion Information, pages 14-17.

INSTALLATION: • Use all specified fasteners. See General Notes.

- Nails must be driven at an angle through the joist or truss into the header to achieve the tabulated resistances *(except LUL)*.
- Where 16d commons are specified, 10d commons may be used at 0.83 of the tabulated factored resistance.
- Not designed for welded or nailer applications.
- With 3x carrying members, use 16dx2½" nails into the header and 16d commons into the joist with no reduction in resistance. With 2x carrying members, use 10dx1½" nails into the header and 10d commons into the joist, and reduce the resistance to 0.64 of the table value.

OPTIONS: • LUS and LUL hangers cannot be modified.

- HUS hangers available with the header flanges turned in for 2-2x (3⅛") and 4x only, with no load reduction. See HUSC Concealed Flange illustration.
- Concealed flanges are not available for HGUS.
- Other sizes available; consult your Simpson Strong-Tie representative.
- See hanger options on page 230.

These products are available with additional corrosion protection. Additional products on this page may also be available with this option, check with Simpson Strong-Tie for details.

These products are approved for installation with the Strong-Drive® SD Connector screw. See page 24 for more information.

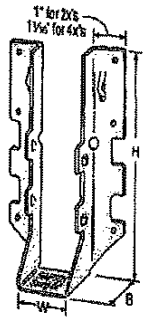

LUS28

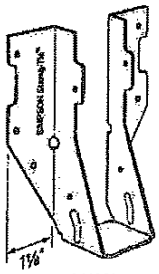

LU26L

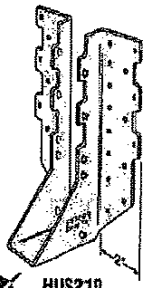

HUS210 *(HUS26, HUS28, and HHUS similar)*

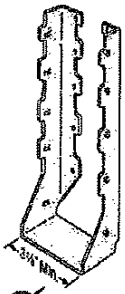

HUSC Concealed Flanges *(not available for HHUS, HGUS and HUS2x)*

HUS412

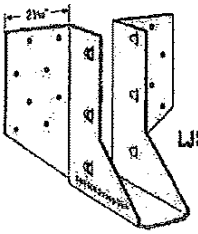

LJS26DS

Model No.	Ga.	Dimensions (in) W	H	B	d_s[3]	Fasteners Header	Joist	Factored Resistance D.Fir-L Uplift (K_D = 1.15) lbs / kN	D.Fir-L Normal (K_D = 1.60) lbs / kN	S-P-F Uplift (K_D = 1.15) lbs / kN	S-P-F Normal (K_D = 1.60) lbs / kN
SINGLE 2x SIZES											
LUS24	18	1⅝	3⅛	1¾	2¼	4-10d	2-10d	710 / 3.16	1625 / 7.23	645 / 2.87	1155 / 5.14
LU24L	22	1⅝	3	1⅜	2 11/16	4-10d	2-10dx1½	360 / 1.60	1020 / 4.54	320 / 1.42	725 / 3.22
LU26L	22	1⅝	5	1⅝	4⅝	6-10d	4-10dx1½	720 / 3.20	1605 / 7.14	645 / 2.87	1140 / 5.07
LUS26	18	1⅝	4⅝	1¾	3¾	4-10d	4-10d	1420 / 6.32	2170 / 9.65	1290 / 5.74	1630 / 7.25
HUS26	16	1⅝	5⅝	3	3 15/16	14-16d	6-16d	2705 / 11.30	4940 / 21.97	2065 / 9.20	3875 / 17.24
LJS26DS	18	1⅝	5	3½	4⅝	16-16d	6-16d	2055 / 9.14	4265 / 18.97	1460 / 6.49	4115 / 18.31
HGUS26	12	1¾	5⅝	5	4⅛	20-16d	8-16d	2685 / 11.96	6625 / 29.51	2685 / 11.96	5700 / 25.35
LU28L	20	1⅝	6⅛	1⅝	5⅞	6-10d	6-10dx1½	1140 / 5.07	2185 / 9.72	1020 / 4.54	1550 / 6.89
LUS28	18	1⅝	6⅝	1¾	3¾	6-10d	4-10d	1420 / 6.32	2520 / 11.21	1290 / 5.74	1790 / 7.96
HUS28	16	1¾	7 1/16	3	6 1/16	22-16d	8-16d	3605 / 16.04	5365 / 23.86	2675 / 11.90	4345 / 19.33
HGUS28	12	1⅝	7⅛	5	6⅛	36-16d	12-16d	3310 / 14.74	7675 / 34.19	3310 / 14.74	6900 / 30.73
LU210L	20	1⅝	8	1⅜	7⅝	10-10d	6-10dx1½	1140 / 5.07	2485 / 11.10	1020 / 4.54	1770 / 7.87
LUS210	18	1⅝	7 15/16	1¾	3⅝	8-10d	4-10d	1420 / 6.32	2785 / 12.39	1290 / 5.74	2210 / 9.83

See footnotes on page 155.

LICENSED PROFESSIONAL ENGINEER
G. V. LUBARSKY
100044463
PROVINCE OF ONTARIO

Catalogue C-C-CANZ2015 © 2015 SIMPSON STRONG-TIE COMPANY INC.

MICRO CITY ENGINEERING SERVICES INC.

TEL: (519) 287 - 2242

R.R. #1, P.O. BOX 61, GLENCOE, ONTARIO, N0L 1M0

CONVENTIONAL VALLEY FRAMING DETAIL

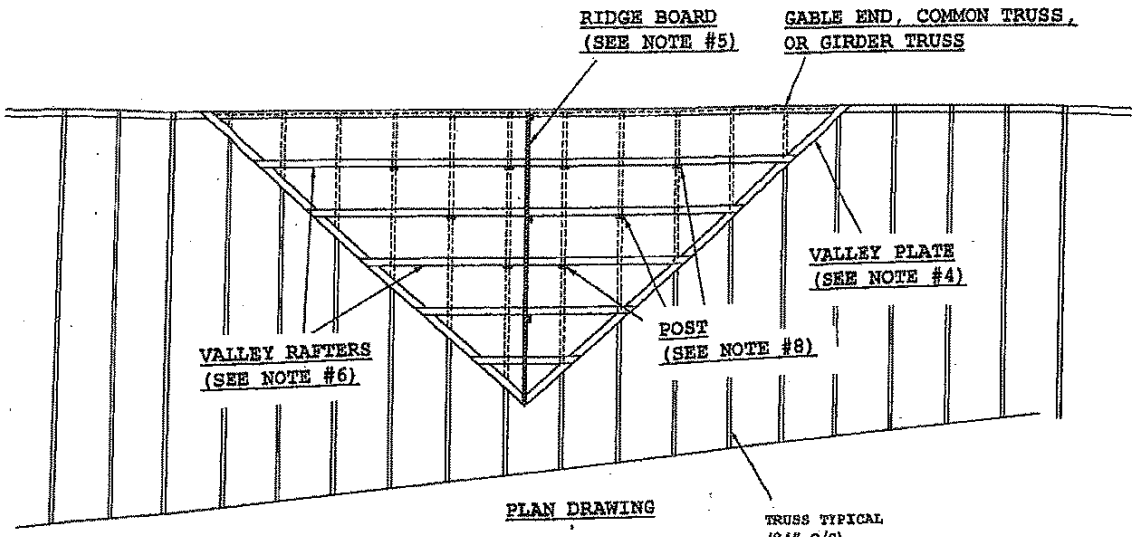

PLAN DRAWING

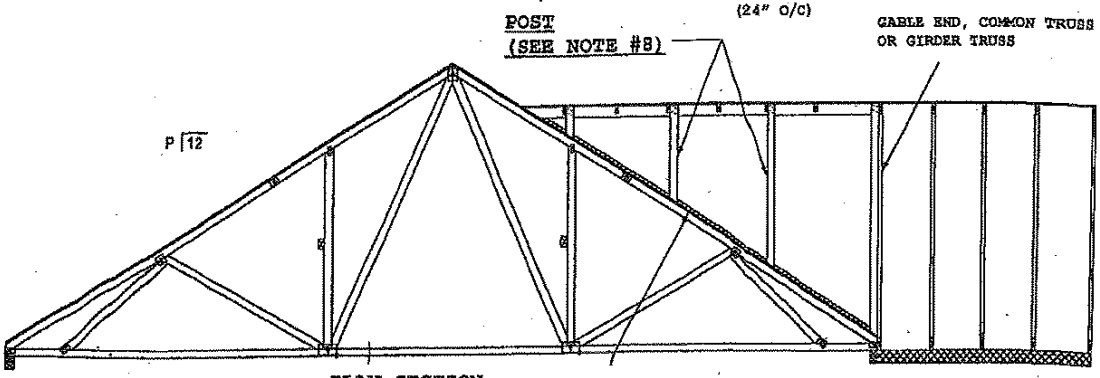

PLAN SECTION

GENERAL SPECIFICATIONS:

(1) WITH THE BASE TRUSSES ERECTED (INSTALLED), APPLY SHEATHING TOP CHORD OF SUPPORTING (BASE) TRUSSES.
(2) BRACE BOTTOM CHORD AND WEB MEMBERS AS PER PRE-ENGINEERED TRUSS DESIGNS.
(3) DEFINE VALLEY RIDGE BY RUNNING A LEVEL STRING FROM THE INTERSECTING RIDGE OF THE (a) GABLE END, (b) GIRDER TRUSS OR (c) COMMON TRUSS TO THE ROOF SHEATHING.
(4) INSTALL 2 X 6 VALLEY PLATES ON FLAT. FASTEN TO EACH SUPPORTING TRUSS WITH (2) 16d (3.5" X 0.131") NAILS.
(5) SET A 2 X 6 #2 RIDGE BOARD (MAX. 10'-0" RIDGE) OR 2 X 8 #2 SPF RIDGE BOARD (MAX. 20'-0" RIDGE). SUPPORT RIDGE BOARD WITH 2 X 4 POSTS SPACED 48" O/C. BEVEL BOTTOM OF POST TO SET EVENLY ON THE SHEATHING. FASTEN POST TO RIDGE WITH (4) 10d (3" X 0.131") NAILS. FASTEN POST TO ROOF SHEATHING WITH (3) 10d (3" X 0.131") TOE-NAILS.
(6) FRAME VALLEY RAFTERS FROM VALLEY PLATE TO RIDGE BOARD. MAXIMUM RAFTER SPACING IS 24" O/C. FASTEN VALLEY RAFTER TO RIDGE BEAM WITH (3) 16d (3.5" X 0.131") TOE-NAILS. FASTEN VALLEY RAFTER TO VALLEY PLATE WITH (3) 16d (3.5" X 0.131") TOE-NAILS.
(7) SUPPORT THE VALLEY RAFTERS WITH 2 X 4 POSTS AT 48" O/C (OR LESS) ALONG EACH RAFTER. INSTALL POSTS IN A STAGGERED PATTERN AS SHOWN ON PLAN DRAWING. ALIGN POSTS WITH TRUSSES BELOW. FASTEN VALLEY RAFTER TO POST WITH (4) 10d (3" X 0.131") NAILS. FASTEN POST THROUGH SHEATHING TO SUPPORTING TRUSSES WITH (2) 16d (3.5" X 0.131") NAILS.
(8) POSTS SHALL BE 2 X 4 #2 SPF OR BETTER. POSTS EXCEEDING 75" IN HEIGHT SHALL BE INCREASED TO 4 X 4 #2 SPF, OR BETTER, OR BE PRE-ASSEMBLED TWO (2) PLY 2 X 4 #2 SPF OR BETTER FASTENED TOGETHER WITH 2 ROWS OF 10d (3" X 0.131") NAILS AT 6" O/C.
(9) MAINTAIN A MINIMUM 3/4" LUMBER EDGE DISTANCE WHEN NAILING. NAIL SPACING SHOULD APPROXIMATE A MINIMUM 1-3/4" O/C OR MORE UNLESS NOTED OTHERWISE. ALL CONSTRUCTION TO CONFORM TO ONTARIO BUILDING CODE (CURRENT ADDITION) AT ALL TIMES.

NOTES:

(10) 48" O/C (MAXIMUM POST SPACING.
(11) ROOF LIVE LOAD = 34.8 PSF (MAX.)
(12) ROOF DEAD LOAD = 10.0 PSF (MAX.)
(13) PART 9 APPLICATION ONLY (ONTARIO BUILDING CODE)
(14) PART 4 APPLICATION ONLY (ONTARIO BUILDING CODE) WITH APPROVED REVIEW BY LICENSED PROFESSIONAL ENGINEER.
(15) BASE TRUSS SPACING (24" O/C MAX.)
(16) ALL PRE-ENGINEERED BASE TRUSS COMPONENTS TO BE SEALED BY LICENSED PROFESSIONAL ENGINEER AND THIS DETAIL TO BE VERIFIED AND APPROVED BY SAME WHEN RIDGE BOARD LENGTH EXCEEDS 12'-0".
(17) ALL BASE TRUSSES: P = 4 (4/12) - MINIMUM.
(18) ALL VALLEY RAFTERS: P = 4 (4/12) - MINIMUM.

LICENSED PROFESSIONAL ENGINEER
3-5-74
S. KATSOULAKOS
PROVINCE OF ONTARIO

DWG NO TÄM 6305.14
STRUCTURAL
COMPONENT ONLY

Symbols

PLATE LOCATION AND ORIENTATION

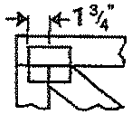

Center plate on joint unless x, y offsets are indicated. Dimensions are in ft-in-sixteenths or mm. Apply plates to both sides of truss and fully embed teeth.

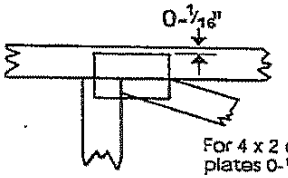

For 4 x 2 orientation, locate plates 0-1/16" from outside edge of truss.

This symbol indicates the required direction of slots in connector plates.

* Plate location details available in MiTek software or upon request.

PLATE SIZE

4 X 4

The first dimension is the plate width measured perpendicular to slots. Second dimension is the length parallel to slots.

LATERAL BRACING LOCATION

Indicated by symbol shown and/or by text in the bracing section of the output. Use T, I or Eliminator bracing if indicated.

BEARING

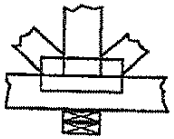

Indicates location where bearings (supports) occur. Icons vary but reaction section indicates joint number where bearings occur.

Industry Standards:

TPIC: Truss Design Procedures and Specifications for Light Metal Plate Connected Wood Trusses

DSB-89: Design Standard for Bracing.

BCSI: Building Component Safety Information, Guide to Good Practice for Handling, Installing & Bracing of Metal Plate Connected Wood Trusses.

Numbering System

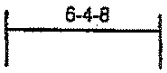

dimensions shown in ft-in-sixteenths or mm (Drawings not to scale)

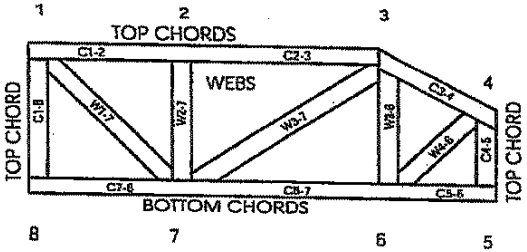

JOINTS ARE GENERALLY NUMBERED/LETTERED CLOCKWISE AROUND THE TRUSS STARTING AT THE JOINT FARTHEST TO THE LEFT.

CHORDS AND WEBS ARE IDENTIFIED BY END JOINT NUMBERS/LETTERS.

PRODUCT CODE APPROVALS

CCMC Reports:

11996-L, 10319-L, 13270-L, 12691-R

© 2007 MiTek® All Rights Reserved

MiTek®

POWER TO PERFORM.™

General Safety Notes

Failure to Follow Could Cause Property Damage or Personal Injury

1. Additional stability bracing for truss system, e.g. diagonal or X-bracing, is always required. See BCSI.
2. Truss bracing must be designed by an engineer. For wide truss spacing, individual lateral braces themselves may require bracing, or alternative T, I, or Eliminator bracing should be considered.
3. Never exceed the design loading shown and never stack materials on inadequately braced trusses.
4. Provide copies of this truss design to the building designer, erection supervisor, property owner and all other interested parties.
5. Cut members to bear tightly against each other.
6. Place plates on each face of truss at each joint and embed fully. Knots and wane at joint locations are regulated by TPIC.
7. Design assumes trusses will be suitably protected from the environment in accord with TPIC.
8. Unless otherwise noted, moisture content of lumber shall not exceed 19% at time of fabrication.
9. Unless expressly noted, this design is not applicable for use with fire retardant, preservative treated, or green lumber.
10. Camber is a non-structural consideration and is the responsibility of truss fabricator. General practice is to camber for dead load deflection.
11. Plate type, size, orientation and location dimensions indicated are minimum plating requirements.
12. Lumber used shall be of the species and size, and in all respects, equal to or better than that specified.
13. Top chords must be sheathed or purlins provided at spacing indicated on design.
14. Bottom chords require lateral bracing at 10 ft. spacing, or less, if no ceiling is installed, unless otherwise noted.
15. Connections not shown are the responsibility of others.
16. Do not cut or alter truss member or plate without prior approval of an engineer.
17. Install and load vertically unless indicated otherwise.
18. Use of green or treated lumber may pose unacceptable environmental, health or performance risks. Consult with project engineer before use.
19. Review all portions of this design (front, back, words and pictures) before use. Reviewing pictures alone is not sufficient.
20. Design assumes manufacture in accordance with TPIC Quality Criteria.

Micro City Engineering Services Inc.
(BCIN: 26064; FIRM BCIN: 29991)
RR #1, Po Box 61
Glencoe, Ontario
N0L 1M0
(519) 287 - 2242; Fax: (519) 287 - 5750 (Call)

LICENSED PROFESSIONAL ENGINEER
1-20-14
S. KATSOULAKOS
PROVINCE OF ONTARIO
DWG NO [illegible] 1-20-14
STRUCTURAL
COMPONENT ONLY

Responsibilities:

Micro City Engineering Services is responsible for the design of trusses as individual components.

It is the responsibilities of others to ascertain that the design loads utilized on this (these) drawing(s) meet or exceed the actual dead load imposed by the structure and the live load imposed by the local building code or the authorities having jurisdiction over such decisions.

All dimensions are to be verified by the owner, contractor, architect, or other authority having input over such decisions prior to truss component manufacture. At no time shall Micro City Engineering Services Inc. or its employees be responsible for dimension errors.

Micro City Engineering Services Inc. bears no responsibility for the erection of any truss components. Persons erecting truss components are cautioned to seek professional advice regarding temporary and permanent bracing systems and to be totally familiar with all aspects of truss erection prior to proceeding on any truss component erection job. Any bracing shown on Micro City Engineering Services Inc. or Tamarack Roof Trusses Inc. sealed or unsealed truss component drawings is specified for the single truss component in question and is identified as an integral part of the design for that particular truss component but is not meant to represent the only required bracing for that particular truss component when installed as a component in a series of truss components in a roof truss system.

It is the truss manufacturer's responsibility to ensure that trusses are manufactured in accordance with Micro City Engineering Services Inc. specifications outlined below:

SPECIFICATIONS:

Truss components sealed by Micro City Engineering Services Inc. must conform to the relevant sections of the current Building Code of Ontario and Canada (Part 4 or Part 9) or the current Farm Building Code of Canada in accordance with the application specified on the sealed truss component drawing. All truss component design procedures must conform to the current design standard issued by the Truss Plate Institute of Canada (TPIC). All unit lumber and nailing stresses identified on truss component design drawings and/or used in the design of individual truss components shall conform to the current CSA Wood Design standard identified in the current Building Code and TPIC Design Standards.

The lumber used to manufacture any truss component is to conform to the specified size and grade identified on the truss drawing.

The lumber used in the manufacture of any truss component is not to exceed 19% during its service use unless specifically noted on the truss drawing.

The lumber used in the manufacture of any truss component is not to be treated with any chemicals during its service life unless specifically noted on the truss drawing.

Connector plates shall be applied to both faces of the truss component at each joint and shall be positioned exactly as specified.

The top chord of any truss component is assumed to be continuously laterally braced by the roof sheathing or purlins at intervals specified on the sealed truss component drawing but not exceeding 24" o/c (Part 9 design) and not exceeding 48" o/c (Part 4 or Agricultural design).

When a truss component is to be installed with no rigid ceiling attached directly to the bottom chord, then the bottom chord is to be laterally braced at intervals not exceeding 3m (or 10'-0").

All sealed or unsealed truss component drawings provided by Micro City Engineering Services Inc. Or Tamarack Roof Trusses Inc. should be read in conjunction with the following:

Warning-Verify design parameters and READ NOTES ON THIS AND INCLUDED MITEK REFERENCE PAGE MII-7473C rev 10-'08 BEFORE USE. Design valid for use only with Mitek connectors. This design is based only upon parameters shown, and is for individual building component. Applicability of design parameters and proper incorporation of component is the responsibility of the building designer - not the truss designer. Bracing shown is for lateral support of individual web members only. Additional temporary bracing to insure stability during construction is the responsibility of the erector. Additional permanent bracing of the overall structure is the responsibility of the building designer. For general guidance regarding fabrication, quality control, storage, delivery, erection, and bracing, consult TPIC Appendix G - Minimum Quality Manufacturing Criteria available from www.tpic.ca and BCSI Building Component Safety Information available from the Truss Plate Institute, 781 N. Lee Street, Suite 312, Alexandria, VA, 22314.