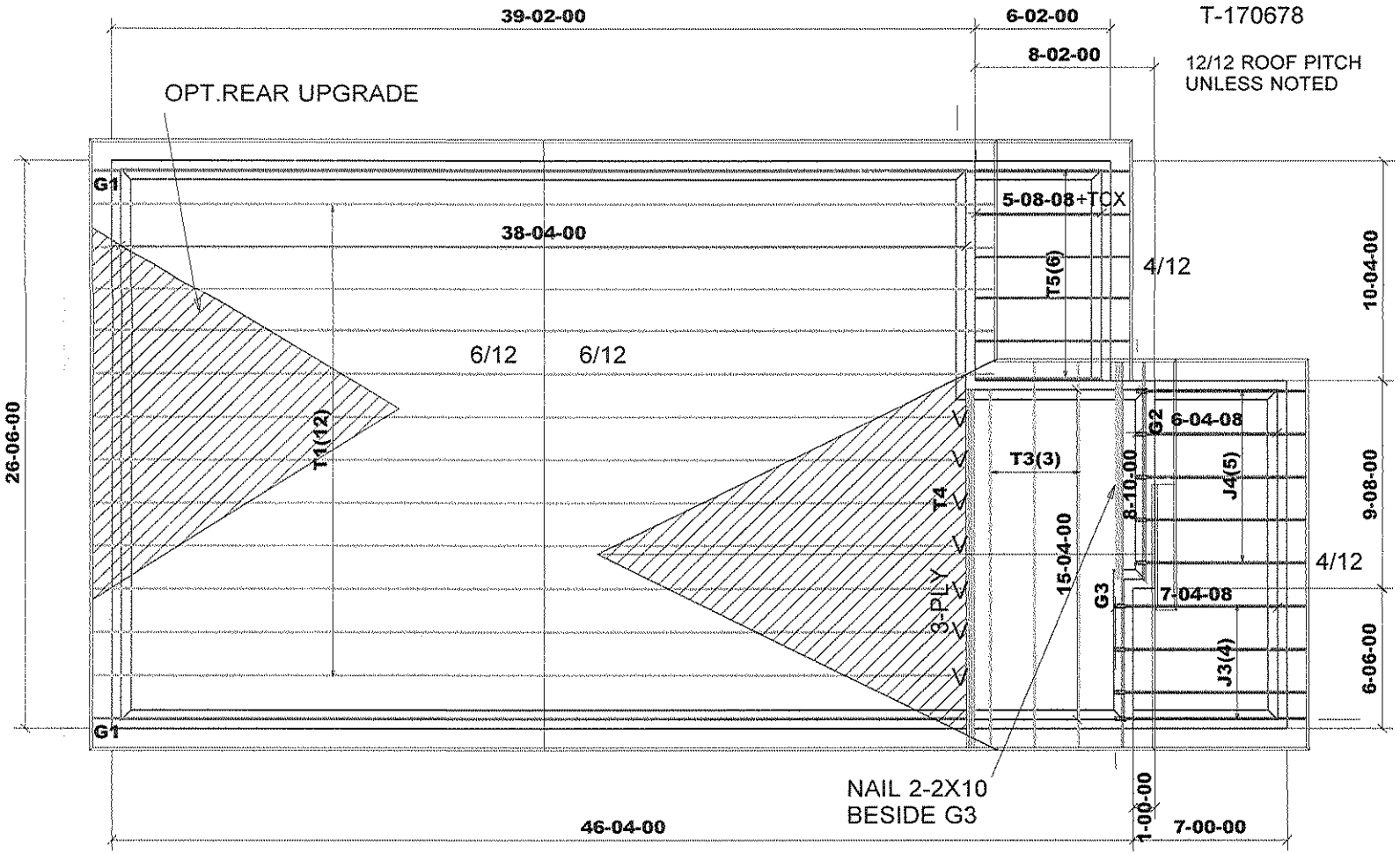

12" FINISH O.H
R.T.M.C
2X6 EXTERIOR WALLS
ASPHALT SHINGLES
2X6 FASCIA BOARD

ALL CONVENTIONAL ROOF FRAMING TO CONFORM TO PART9 OF THE OBC.LATEST EDITION ROOF RAFTERS THAT MEET OR CROSS OVER TRUSSES ARE TO BE 2"X4"SPF @24"o.c. WITH A 2"X4"SPF VERTICAL POST TO THE TRUSS UNDER AT EACH CROSS POINT. POSTS LONGER THAN 6' TO BE LATERALLY BRACED SO THAT THE DISTANCE BETWEEN END POINTS AND BETWEEN ROWS OF BRACING DOES NOT EXCEED 6'.

DESIGN CONFORMS WITH THE RELEVANT SECTION OF THE LATEST EDITION OF O.B.C. PART.9

DESIGN LOADS:
GROUND SNOW LOAD
Ss= 2.6 kPa

TC DEAD	3 PSF
BC LIVE	10.5 PSF
BC DEAD	7 PSF

DENOTES CONVENTIONAL FRAMING

HARDWARE
LJS26DS(V)

Town of Innisfil Certified Model
04/01/2018 2:06:16 PM kgervais

m9782

TAMARACK LUMBER INC.	Job Track: **42067**	Builder / Location: **BAYVIEW WELLINGTON / INNISFIL**	Model / Elevation: **S32-2-10G / A**
	Layout ID: **266139**	Project: **ALCONA SHORES**	
	Plan Log: **85812**	Date: 9/7/2017 Designer: JG	

THESE DRAWINGS CONSTITUTE THE PROPERTY OF TAMARACK ROOF TRUSSES INC., SHALL NOT BE REPRODUCED, PUBLISHED, OR REDISTRIBUTED IN ANY MANNER OR UTILIZED FOR ANY PURPOSE OTHER THAN THE MANUFACTURE OF TRUSSES BY TAMARACK ROOF TRUSSES INC AND WILL BE RETRACTED BY TAMARACK ROOF TRUSSES INC IF UTLILZED FOR ANY OTHER PURPOSE.

Mitek ver 7.5.0

T-170678

10/12 ROOF PITCH
UNLESS NOTED

HARDWARE
LUS24(O)
LJS26DS(V)
LUS24-2(OO)
HGUS26-2(XX)

BM1,2 : 2-2X10

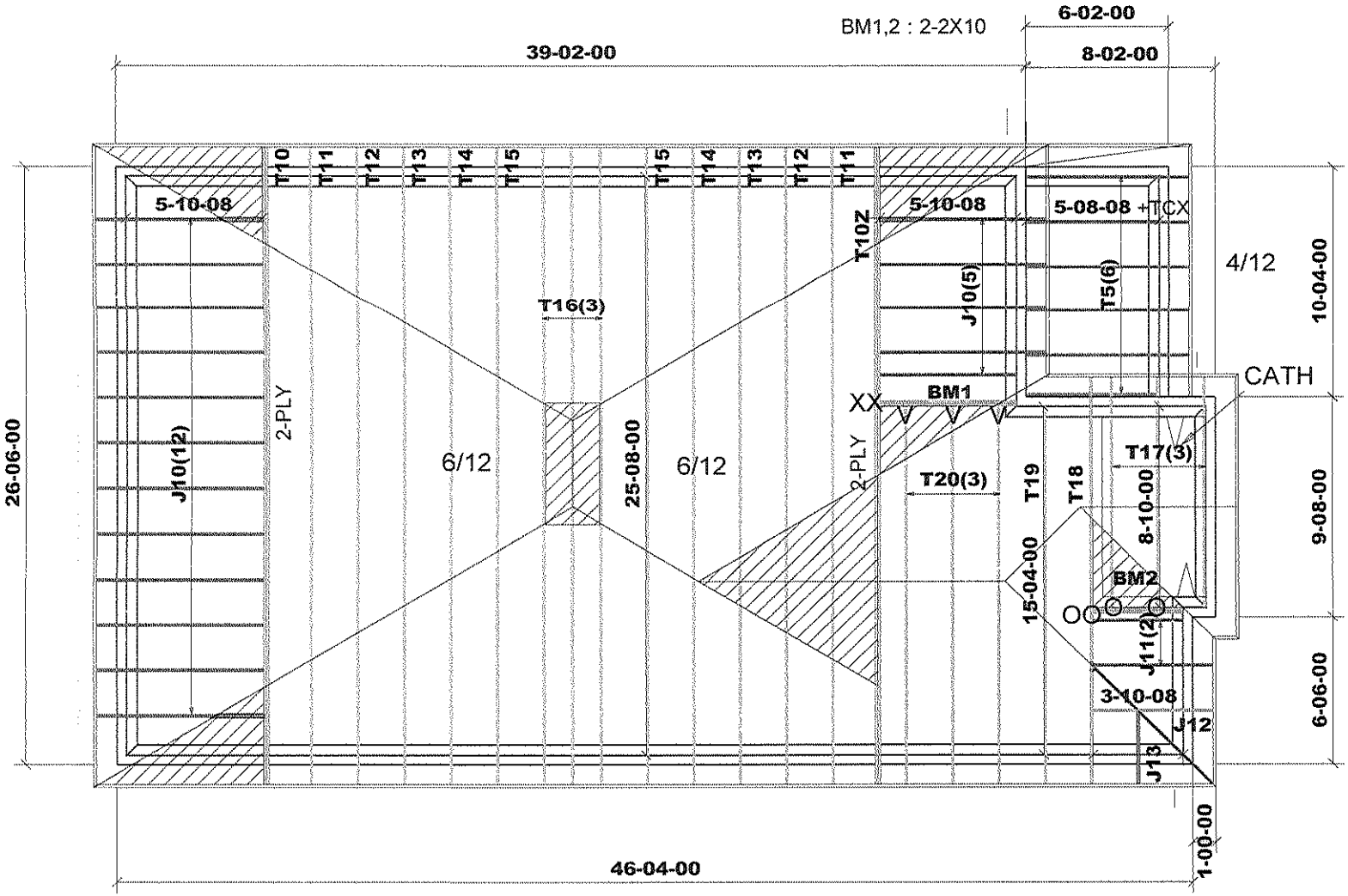

12" FINISH O.H
R.T.M.C
2X6 EXTERIOR WALLS
ASPHALT SHINGLES
2X6 FASCIA BOARD

ALL CONVENTIONAL ROOF FRAMING TO CONFORM TO PART9 OF THE OBC.LATEST EDITION ROOF RAFTERS THAT MEET OR CROSS OVER TRUSSES ARE TO BE 2"X4"SPF @24"o.c. WITH A 2"X4"SPF VERTICAL POST TO THE TRUSS UNDER AT EACH CROSS POINT. POSTS LONGER THAN 6' TO BE LATERALLY BRACED SO THAT THE DISTANCE BETWEEN END POINTS AND BETWEEN ROWS OF BRACING DOES NOT EXCEED 6'.

DESIGN CONFORMS WITH THE RELEVANT SECTION OF THE LATEST EDITION OF O.B.C. PART.9

DESIGN LOADS:
GROUND SNOW LOAD
Ss= 2.6 kPa

TC DEAD	3 PSF
BC LIVE	10.5 PSF
BC DEAD	7 PSF

DENOTES CONVENTIONAL FRAMING

Town of Innisfil Certified Model
04/01/2018 2:06:20 PM kgervais

m9782

TAMARACK LUMBER INC.

Job Track: **42067**	Builder / Location: **BAYVIEW WELLINGTON / INNISFIL**	Model / Elevation: **S32-2-10G / B**	
Layout ID: **266140**	Project: **ALCONA SHORES**	THESE DRAWINGS CONSTITUTE THE PROPERTY OF TAMARACK ROOF TRUSSES INC., SHALL NOT BE REPRODUCED, PUBLISHED, OR REDISTRIBUTED IN ANY MANNER OR UTILIZED FOR ANY PURPOSE OTHER THAN THE MANUFACTURE OF TRUSSES BY TAMARACK ROOF TRUSSES INC AND WILL BE RETRACTED BY TAMARACK ROOF TRUSSES INC IF UTLILZED FOR ANY OTHER PURPOSE.	
Plan Log: **85812**	Date: 9/7/2017 Designer: JG		

Mitek ver 7.5.0

T-170678

10/12 ROOF PITCH
UNLESS NOTED

HARDWARE
LUS24(O)
LJS26DS(V)
LUS24-2(OO)
HGUS26-2(XX)

BM1,2,10 : 2-2X10

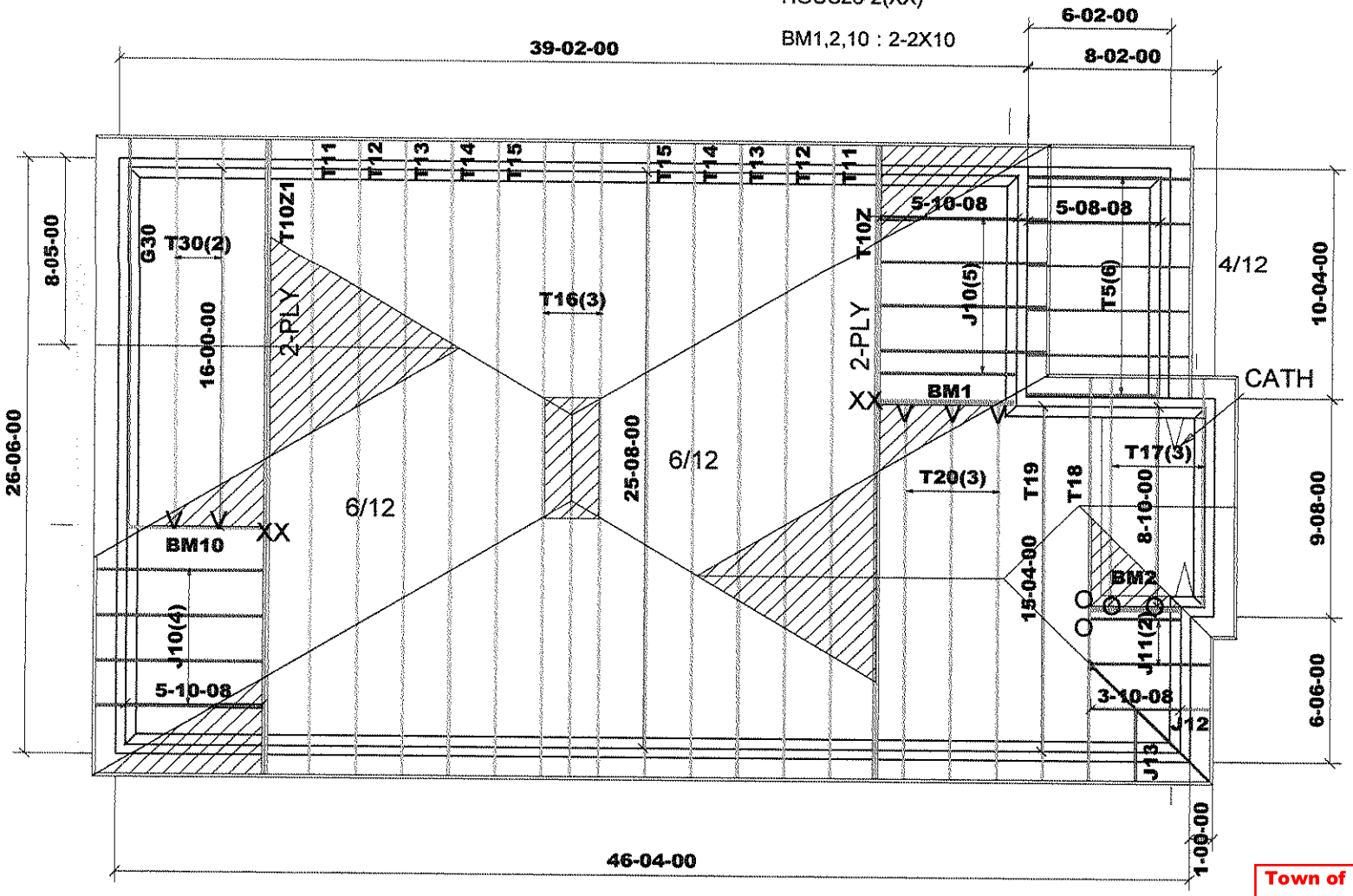

12" FINISH O.H
R.T.M.C
2X6 EXTERIOR WALLS
ASPHALT SHINGLES
2X6 FASCIA BOARD

ALL CONVENTIONAL ROOF FRAMING TO CONFORM TO PART9 OF THE OBC.LATEST EDITION ROOF RAFTERS THAT MEET OR CROSS OVER TRUSSES ARE TO BE 2"X4"SPF @24"o.c. WITH A 2"X4"SPF VERTICAL POST TO THE TRUSS UNDER AT EACH CROSS POINT.POSTS LONGER THAN 6' TO BE LATERALLY BRACED SO THAT THE DISTANCE BETWEEN END POINTS AND BETWEEN ROWS OF BRACING DOES NOT EXCEED 6'.

DESIGN CONFORMS WITH THE RELEVANT SECTION OF THE LATEST EDITION OF O.B.C. PART.9

DESIGN LOADS:
GROUND SNOW LOAD
Ss= 2.6 kPa

TC DEAD	3 PSF
BC LIVE	10.5 PSF
BC DEAD	7 PSF

DENOTES CONVENTIONAL FRAMING

Town of Innisfil Certified Model
04/01/2018 2:06:25 PM kgervais

m9782

TAMARACK LUMBER INC.

Job Track: **42067**	Builder / Location: **BAYVIEW WELLINGTON / INNISFIL**		Model / Elevation: **S32-2-10G / B - REAR UPGRADE**
Layout ID: **272252**	Project: **ALCONA SHORES**		
Plan Log: **87565**	Date: 9/7/2017	Designer: JG	

THESE DRAWINGS CONSTITUTE THE PROPERTY OF TAMARACK ROOF TRUSSES INC., SHALL NOT BE REPRODUCED, PUBLISHED, OR REDISTRIBUTED IN ANY MANNER OR UTILIZED FOR ANY PURPOSE OTHER THAN THE MANUFACTURE OF TRUSSES BY TAMARACK ROOF TRUSSES INC AND WILL BE RETRACTED BY TAMARACK ROOF TRUSSES INC IF UTLILZED FOR ANY OTHER PURPOSE.

Mitek ver 7.5.0

T-170678

12/12 ROOF PITCH UNLESS NOTED

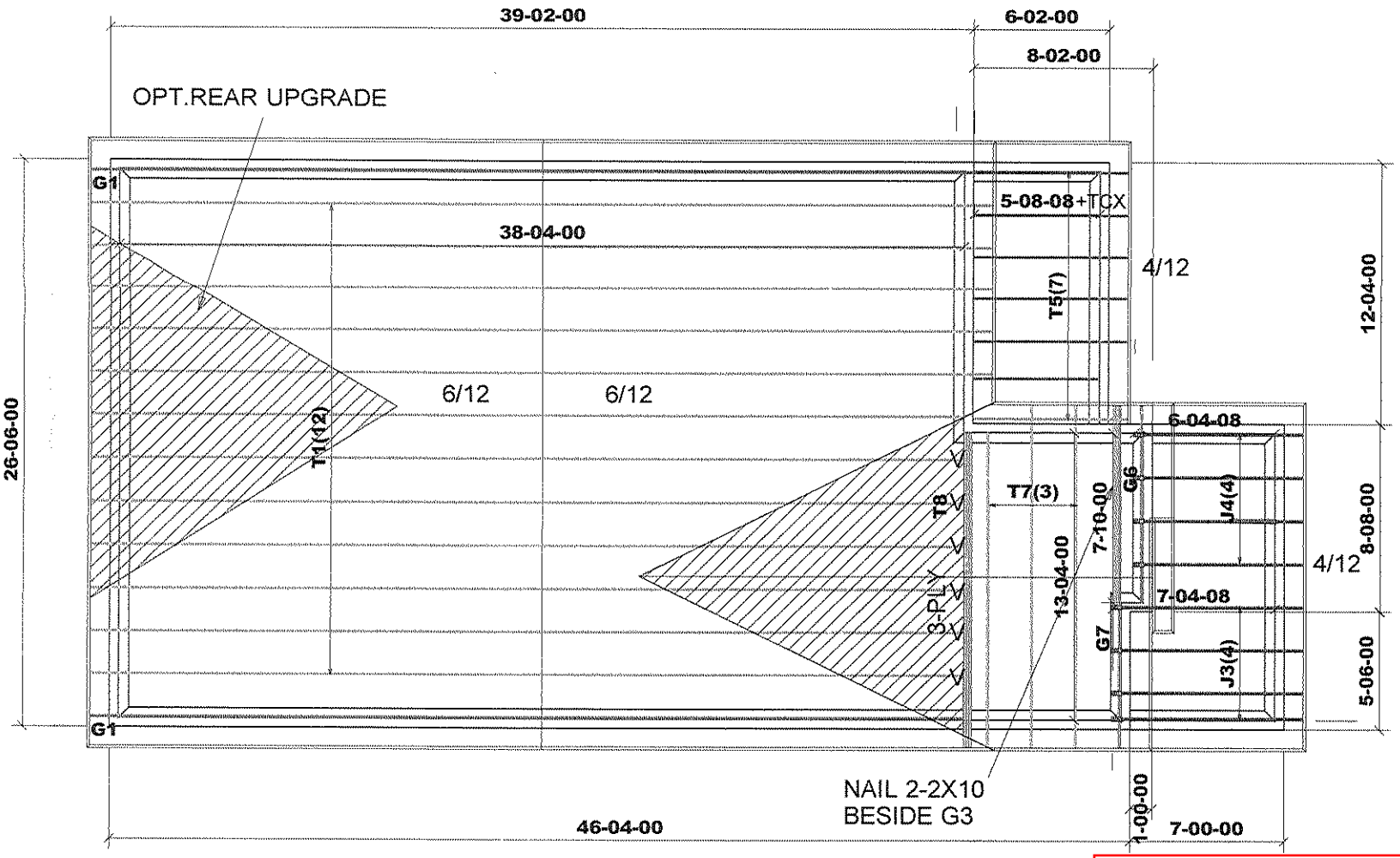

12" FINISH O.H
R.T.M.C
2X6 EXTERIOR WALLS
ASPHALT SHINGLES
2X6 FASCIA BOARD

ALL CONVENTIONAL ROOF FRAMING TO CONFORM TO PART9 OF THE OBC.LATEST EDITION ROOF RAFTERS THAT MEET OR CROSS OVER TRUSSES ARE TO BE 2"X4"SPF @24"o.c. WITH A 2"X4"SPF VERTICAL POST TO THE TRUSS UNDER AT EACH CROSS POINT.POSTS LONGER THAN 6' TO BE LATERALLY BRACED SO THAT THE DISTANCE BETWEEN END POINTS AND BETWEEN ROWS OF BRACING DOES NOT EXCEED 6'.

DESIGN CONFORMS WITH THE RELEVANT SECTION OF THE LATEST EDITION OF O.B.C. PART.9

DESIGN LOADS:
GROUND SNOW LOAD
Ss= 2.6 kPa

TC DEAD	3 PSF
BC LIVE	10.5 PSF
BC DEAD	7 PSF

DENOTES CONVENTIONAL FRAMING

HARDWARE
LJS26DS(V)

Town of Innisfil Certified Model
04/01/2018 2:06:29 PM kgervais

m9782

TAMARACK LUMBER INC.	Job Track: **42067**	Builder / Location: **BAYVIEW WELLINGTON / INNISFIL**	Model / Elevation: **S32-2-12G / A**
	Layout ID: **272253**	Project: **ALCONA SHORES**	
	Plan Log: **87565**	Date: 9/7/2017 Designer: JG	

THESE DRAWINGS CONSTITUTE THE PROPERTY OF TAMARACK ROOF TRUSSES INC., SHALL NOT BE REPRODUCED, PUBLISHED, OR REDISTRIBUTED IN ANY MANNER OR UTILIZED FOR ANY PURPOSE OTHER THAN THE MANUFACTURE OF TRUSSES BY TAMARACK ROOF TRUSSES INC AND WILL BE RETRACTED BY TAMARACK ROOF TRUSSES INC IF UTLILZED FOR ANY OTHER PURPOSE

Mitek ver 7.5.0

10/12 ROOF PITCH
UNLESS NOTED

T-170678

HARDWARE
LUS24(O)
LJS26DS(V)
LUS26-2(VV)
HGUS26-2(XX)

BM21,22 : 2-2X10

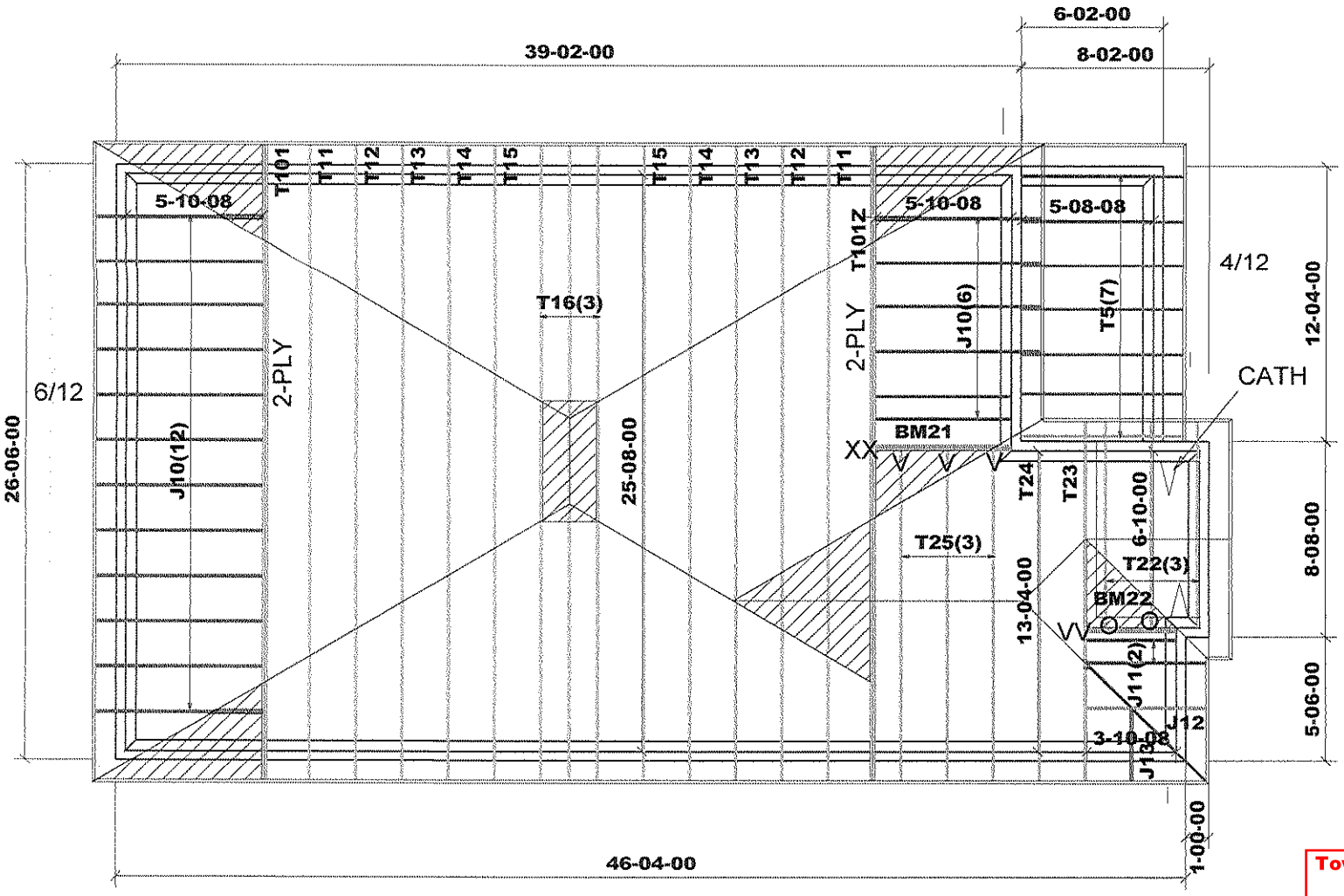

12" FINISH O.H
R.T.M.C
2X6 EXTERIOR WALLS
ASPHALT SHINGLES
2X6 FASCIA BOARD

ALL CONVENTIONAL ROOF FRAMING TO CONFORM TO PART9 OF THE OBC.LATEST EDITION ROOF RAFTERS THAT MEET OR CROSS OVER TRUSSES ARE TO BE 2"X4"SPF @24"o.c. WITH A 2"X4"SPF VERTICAL POST TO THE TRUSS UNDER AT EACH CROSS POINT.POSTS LONGER THAN 6' TO BE LATERALLY BRACED SO THAT THE DISTANCE BETWEEN END POINTS AND BETWEEN ROWS OF BRACING DOES NOT EXCEED 6'.

DESIGN CONFORMS WITH THE RELEVANT SECTION OF THE LATEST EDITION OF O.B.C. PART.9

DESIGN LOADS:
GROUND SNOW LOAD
Ss= 2.6 kPa

TC DEAD	3 PSF
BC LIVE	10.5 PSF
BC DEAD	7 PSF

DENOTES CONVENTIONAL FRAMING

Town of Innisfil Certified Model
04/01/2018 2:06:33 PM kgervais

m9782

TAMARACK LUMBER INC.

Job Track: 42067	Builder / Location: BAYVIEW WELLINGTON / INNISFIL		Model / Elevation: S32-2-12G / B
Layout ID: 272254	Project: ALCONA SHORES		
Plan Log: 87565	Date: 9/7/2017	Designer: JG	

THESE DRAWINGS CONSTITUTE THE PROPERTY OF TAMARACK ROOF TRUSSES INC., SHALL NOT BE REPRODUCED, PUBLISHED, OR REDISTRIBUTED IN ANY MANNER OR UTILIZED FOR ANY PURPOSE OTHER THAN THE MANUFACTURE OF TRUSSES BY TAMARACK ROOF TRUSSES INC AND WILL BE RETRACTED BY TAMARACK ROOF TRUSSES INC IF UTLILZED FOR ANY OTHER PURPOSE.

Mitek ver 7.5.0

T-170678

10/12 ROOF PITCH
UNLESS NOTED

HARDWARE
LUS24(O)
LJS26DS(V)
LUS26-2(VV)
HGUS26-2(XX)

BM21,22 : 2-2X10

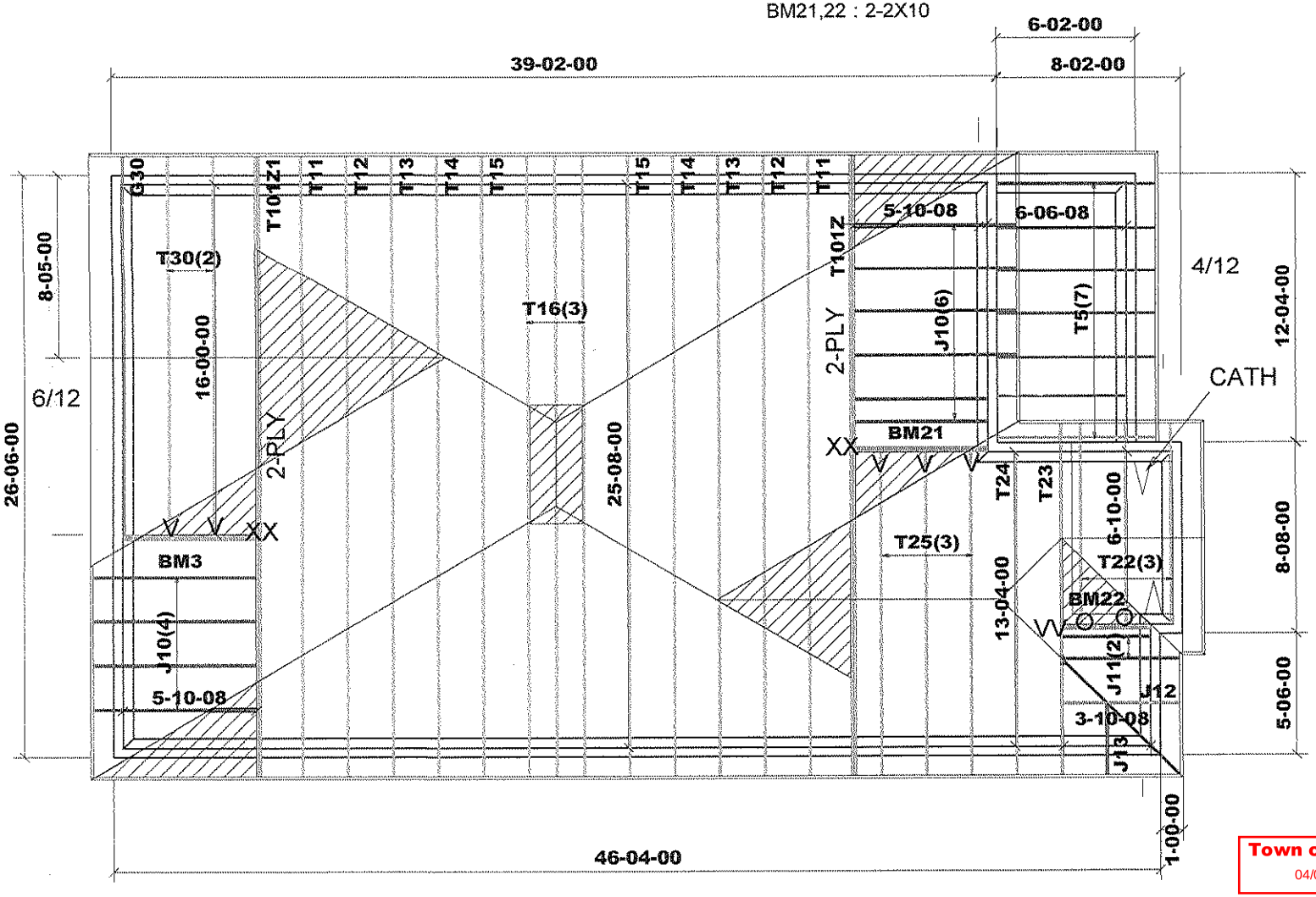

12" FINISH O.H
R.T.M.C
2X6 EXTERIOR WALLS
ASPHALT SHINGLES
2X6 FASCIA BOARD

ALL CONVENTIONAL ROOF FRAMING TO CONFORM TO PART9 OF THE OBC.LATEST EDITION ROOF RAFTERS THAT MEET OR CROSS OVER TRUSSES ARE TO BE 2"X4"SPF @24"o.c. WITH A 2"X4"SPF VERTICAL POST TO THE TRUSS UNDER AT EACH CROSS POINT. POSTS LONGER THAN 6' TO BE LATERALLY BRACED SO THAT THE DISTANCE BETWEEN END POINTS AND BETWEEN ROWS OF BRACING DOES NOT EXCEED 6'.

DESIGN CONFORMS WITH THE RELEVANT SECTION OF THE LATEST EDITION OF O.B.C. PART.9

DESIGN LOADS:
GROUND SNOW LOAD
Ss= 2.6 kPa

TC DEAD	3 PSF
BC LIVE	10.5 PSF
BC DEAD	7 PSF

DENOTES CONVENTIONAL FRAMING

Town of Innisfil Certified Model
04/01/2018 2:06:36 PM kgervais

m97182

TAMARACK LUMBER INC.	Job Track: **42067**	Builder / Location: **BAYVIEW WELLINGTON / INNISFIL**	Model / Elevation: **S32-2-12G / B - REAR UPGRADE**
	Layout ID: **272255**	Project: **ALCONA SHORES**	
	Plan Log: **87565**	Date: 9/7/2017 Designer: JG	

THESE DRAWINGS CONSTITUTE THE PROPERTY OF TAMARACK ROOF TRUSSES INC., SHALL NOT BE REPRODUCED, PUBLISHED, OR REDISTRIBUTED IN ANY MANNER OR UTILIZED FOR ANY PURPOSE OTHER THAN THE MANUFACTURE OF TRUSSES BY TAMARACK ROOF TRUSSES INC AND WILL BE RETRACTED BY TAMARACK ROOF TRUSSES INC IF UTLILZED FOR ANY OTHER PURPOSE.

Mitek ver 7.5.0

TAMARACK LUMBER INC.
ALPA LUMBER GROUP

Delivery Shiplist

DATE	09/07/17
SALES REP	Mario

JOB TRACK: 42067 **LAYOUT ID:** 266139 **LOCATION:** INNISFIL
BUILDER: BAYVIEW WELLINGTON/ALCONA SHO **SUB-BUILDER:**
MODEL: S32-2 **ELEVATION:** A

ROOF TRUSSES

ROOF TRUSS SPACING: 24.0 IN. O.C. (TYP.)

PROFILE	QTY / PLY	MARK / TYPE	PITCH TC / BC	SPAN	TRUSS HEIGHT	LUMBER TOP	LUMBER BOT	OVERHANG LEFT / RIGHT	HEEL HEIGHT LEFT / RIGHT	LBS. / BFT.	BUNDLE # / STACK #	LOAD BY: / REMARKS
	12	T1 COMMON	6.00 / 0.00	38-04-00	10-09-00	2 X 4	2 X 6	01-03-08 / 01-03-08	01-02-00 / 01-02-00	2346.72 / 1428.00		
	2	G1 COMMON	6.00 / 0.00	38-04-00	10-09-00	2 X 4	2 X 6	01-03-08 / 01-03-08	01-02-00 / 01-02-00	408.08 / 262.66		
	1	G2 COMMON	12.00 / 0.00	08-10-00	06-03-08	2 X 4	2 X 4	01-03-08 / 01-03-08	01-10-08 / 01-10-08	47.12 / 30.67		
	3	T3 COMMON	12.00 / 0.00	15-04-00	09-06-08	2 X 4	2 X 4	01-03-08 / 01-03-08	01-10-08 / 01-10-08	233.58 / 147.51		
	1	G3 GABLE	12.00 / 0.00	15-04-00	09-06-08	2 X 4	2 X 4	01-03-08 / 01-03-08	01-10-08 / 01-10-08	84.89 / 52.17		
	1 / 3 Ply	T4 COMMON	12.00 / 0.00	15-04-00	09-06-08	2 X 4	2 X 6	01-03-08 / 01-03-08	01-10-08 / 01-10-08	280.80 / 176.49		
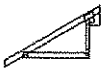	6	T5 JACK-CLOSED	4.00 / 0.00	05-08-08	02-06-04	2 X 4	2 X 4	01-03-08 / 00-00-00	00-03-15 / 02-02-12	120.06 / 76.02		
	4	J3 JACK-OPEN	4.00 / 0.00	07-04-08	02-09-07	2 X 4	2 X 4	01-03-08 / 00-00-00	00-03-15 / 00-05-03	88.64 / 58.00		
	5	J4 JACK-OPEN	4.00 / 0.00	06-04-08	02-05-07	2 X 4	2 X 4	01-03-08 / 00-00-00	00-03-15 / 02-05-07	95.00 / 60.85		

TOTAL # TRUSS= **37.00** TOTAL BFT OF ALL TRUSSES= **2292.37** BFT. TOTAL WEIGHT OF ALL TRUSSES= **3704.89** LBS.

HARDWARE

QTY	ITEM TYPE	MODEL	LENGTH FT-IN-16
7	Hangers	LJS26DS	

TOTAL # ITEMS= **7.00**

TAMARACK LUMBER INC.
ALPA LUMBER GROUP

Delivery Shiplist

DATE	09/07/17
SALES REP	Mario

JOB TRACK: 42067 **LAYOUT ID:** 266140 **LOCATION:** INNISFIL
BUILDER: BAYVIEW WELLINGTON/ALCONA SHO **SUB-BUILDER:**
MODEL: S32-2 **ELEVATION:** B

ROOF TRUSSES

ROOF TRUSS SPACING: 24.0 IN. O.C. (TYP.)

PROFILE	QTY / PLY	MARK / TYPE	PITCH TC / BC	SPAN	TRUSS HEIGHT	LUMBER TOP	LUMBER BOT	OVERHANG LEFT / RIGHT	HEEL HEIGHT LEFT / RIGHT	LBS. / BFT.	BUNDLE # / STACK #	LOAD BY: / REMARKS
	6	T5 JACK-CLOSED	4.00 / 0.00	05-08-08	02-06-04	2 X 4	2 X 4	01-03-08 / 00-00-00	00-03-15 / 02-02-12	120.06 / 76.02		
	1 / 2 Ply	T10 HIP GIRDER	10.00 / 0.00	25-08-00	04-01-04	2 X 4	2 X 6	01-03-08 / 01-03-08	01-07-11 / 01-07-11	241.50 / 150.66		
	1 / 2 Ply	T10Z HIP GIRDER	10.00 / 0.00	25-08-00	04-01-04	2 X 4	2 X 6	01-03-08 / 01-03-08	01-07-11 / 01-07-11	241.50 / 150.66		
	2	T11 HIP	10.00 / 0.00	25-08-00	05-01-04	2 X 4	2 X 4	01-03-08 / 01-03-08	01-07-11 / 01-07-11	214.58 / 139.34		
	2	T12 HIP	10.00 / 0.00	25-08-00	06-01-04	2 X 4	2 X 4	01-03-08 / 01-03-08	01-07-11 / 01-07-11	227.14 / 144.00		
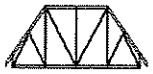	2	T13 HIP	10.00 / 0.00	25-08-00	07-01-04	2 X 4	2 X 4	01-03-08 / 01-03-08	01-07-11 / 01-07-11	232.76 / 145.66		
	2	T14 HIP	10.00 / 0.00	25-08-00	08-01-04	2 X 4	2 X 4	01-03-08 / 01-03-08	01-07-11 / 01-07-11	244.52 / 155.34		
	2	T15 HIP	10.00 / 0.00	25-08-00	09-01-04	2 X 4	2 X 4	01-03-08 / 01-03-08	01-07-11 / 01-07-11	252.90 / 160.00		
	3	T16 HIP	10.00 / 0.00	25-08-00	10-01-04	2 X 4	2 X 4	01-03-08 / 01-03-08	01-07-11 / 01-07-11	387.12 / 245.01		
	3	T17 SCISSORS	10.00 / 6.00	08-10-00	05-03-14	2 X 4	2 X 4	01-03-08 / 01-03-08	01-07-11 / 01-07-11	121.80 / 79.50		
	1	T18 HIP GIRDER	10.00 / 0.00	15-04-00	04-10-07	2 X 4	2 X 6	01-03-08 / 01-03-08	01-07-11 / 01-07-11	80.99 / 52.17		
	1	T19 HIP	10.00 / 0.00	15-04-00	06-06-07	2 X 4	2 X 4	01-03-08 / 01-03-08	01-07-11 / 01-07-11	75.78 / 48.83		
	3	T20 COMMON	10.00 / 0.00	15-04-00	08-00-06	2 X 4	2 X 4	01-03-08 / 01-03-08	01-07-11 / 01-07-11	214.35 / 135.99		
	17	J10 JACK-OPEN	6.00 / 0.00	05-10-08	04-01-04	2 X 4	2 X 4	01-03-08 / 00-00-00	01-02-00 / 04-01-04	285.43 / 181.39		
	2	J11 JACK-OPEN	10.00 / 0.00	03-10-08	04-10-07	2 X 4	2 X 4	01-03-08 / 00-00-00	01-07-11 / 04-10-07	33.66 / 21.34		
	1	J12 JACK-OPEN	10.00 / 0.00	03-10-08	03-01-09	2 X 4	2 X 4	01-03-08 / -02-01-01	01-07-11 / 00-03-08	13.73 / 9.33		
	1	J13 JACK-OPEN	10.00 / 0.00	01-10-08	03-01-09	2 X 4	2 X 4	01-03-08 / -00-01-01	01-07-11 / 00-03-08	9.99 / 7.00		

TOTAL # TRUSS= **52.00** TOTAL BFT OF ALL TRUSSES= **1902.24** BFT. TOTAL WEIGHT OF ALL TRUSSES= **2997.81** LBS.

HARDWARE

QTY	ITEM TYPE	MODEL	LENGTH FT-IN-16

TAMARACK LUMBER INC.
ALPA LUMBER GROUP

Delivery Shiplist

DATE	09/07/17
SALES REP	Mario

JOB TRACK: 42067 **LAYOUT ID:** 266140 **LOCATION:** INNISFIL
BUILDER: BAYVIEW WELLINGTON/ALCONA SHO **SUB-BUILDER:**
MODEL: S32-2 **ELEVATION:** B

HARDWARE

QTY	ITEM TYPE	MODEL	LENGTH FT-IN-16
1	Hangers	HGUS26-2	
3	Hangers	LJS26DS	
2	Hangers	LUS24	
1	Hangers	LUS24-2	

TOTAL # ITEMS= **7.00**

TAMARACK LUMBER INC.
ALPA LUMBER GROUP

Delivery Shiplist

DATE	09/07/17
SALES REP	Mario

JOB TRACK: 42067 LAYOUT ID: 272252 LOCATION: INNISFIL
BUILDER: BAYVIEW WELLINGTON/ALCONA SHO SUB-BUILDER:
MODEL: S32-2-10G ELEVATION: B-REAR UPGRADE

ROOF TRUSSES

ROOF TRUSS SPACING: 24.0 IN. O.C. (TYP.)

PROFILE	QTY / PLY	MARK / TYPE	PITCH TC / BC	SPAN	TRUSS HEIGHT	LUMBER TOP	LUMBER BOT	OVERHANG LEFT / RIGHT	HEEL HEIGHT LEFT / RIGHT	LBS. / BFT.	BUNDLE # / STACK #	LOAD BY: / REMARKS
	6	T5 JACK-CLOSED	4.00 / 0.00	05-08-08	02-06-04	2 X 4	2 X 4	01-03-08 / 00-00-00	00-03-15 / 02-02-12	120.06 / 76.02		
	1 / 2 Ply	T10Z HIP GIRDER	10.00 / 0.00	25-08-00	04-01-04	2 X 4	2 X 6	01-03-08 / 01-03-08	01-07-11 / 01-07-11	241.50 / 150.66		
	1 / 2 Ply	T10Z1 HIP GIRDER	10.00 / 0.00	25-08-00	04-01-04	2 X 4	2 X 6	01-03-08 / 01-03-08	01-07-11 / 01-07-11	241.50 / 150.66		
	2	T11 HIP	10.00 / 0.00	25-08-00	05-01-04	2 X 4	2 X 4	01-03-08 / 01-03-08	01-07-11 / 01-07-11	214.58 / 139.34		
	2	T12 HIP	10.00 / 0.00	25-08-00	06-01-04	2 X 4	2 X 4	01-03-08 / 01-03-08	01-07-11 / 01-07-11	227.14 / 144.00		
	2	T13 HIP	10.00 / 0.00	25-08-00	07-01-04	2 X 4	2 X 4	01-03-08 / 01-03-08	01-07-11 / 01-07-11	232.76 / 145.66		
	2	T14 HIP	10.00 / 0.00	25-08-00	08-01-04	2 X 4	2 X 4	01-03-08 / 01-03-08	01-07-11 / 01-07-11	244.52 / 155.34		
	2	T15 HIP	10.00 / 0.00	25-08-00	09-01-04	2 X 4	2 X 4	01-03-08 / 01-03-08	01-07-11 / 01-07-11	252.90 / 160.00		
	3	T16 HIP	10.00 / 0.00	25-08-00	10-01-04	2 X 4	2 X 4	01-03-08 / 01-03-08	01-07-11 / 01-07-11	387.12 / 245.01		
	3	T17 SCISSORS	10.00 / 6.00	08-10-00	05-03-14	2 X 4	2 X 4	01-03-08 / 01-03-08	01-07-11 / 01-07-11	121.80 / 79.50		
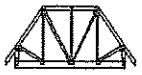	1	T18 HIP GIRDER	10.00 / 0.00	15-04-00	04-10-07	2 X 4	2 X 6	01-03-08 / 01-03-08	01-07-11 / 01-07-11	80.99 / 52.17		
	1	T19 HIP	10.00 / 0.00	15-04-00	06-06-07	2 X 4	2 X 4	01-03-08 / 01-03-08	01-07-11 / 01-07-11	75.78 / 48.83		
	3	T20 COMMON	10.00 / 0.00	15-04-00	08-00-06	2 X 4	2 X 4	01-03-08 / 01-03-08	01-07-11 / 01-07-11	214.35 / 135.99		
	2	T30 COMMON	10.00 / 0.00	16-00-00	08-03-11	2 X 4	2 X 4	01-03-08 / 01-03-08	01-07-11 / 01-07-11	148.24 / 93.34		
	1	G30 COMMON	10.00 / 0.00	16-00-00	08-03-11	2 X 4	2 X 4	01-03-08 / 01-03-08	01-07-11 / 01-07-11	80.10 / 53.33		
	9	J10 JACK-OPEN	6.00 / 0.00	05-10-08	04-01-04	2 X 4	2 X 4	01-03-08 / 00-00-00	01-02-00 / 04-01-04	151.11 / 96.03		
	2	J11 JACK-OPEN	10.00 / 0.00	03-10-08	04-10-07	2 X 4	2 X 4	01-03-08 / 00-00-00	01-07-11 / 04-10-07	33.66 / 21.34		
	1	J12 JACK-OPEN	10.00 / 0.00	03-10-08	03-01-09	2 X 4	2 X 4	01-03-08 / -02-01-01	01-07-11 / 00-03-08	13.73 / 9.33		

TAMARACK LUMBER INC.
ALPA LUMBER GROUP

Delivery Shiplist

DATE	09/07/17
SALES REP	Mario

JOB TRACK: 42067 **LAYOUT ID:** 272252 **LOCATION:** INNISFIL
BUILDER: BAYVIEW WELLINGTON/ALCONA SHO **SUB-BUILDER:**
MODEL: S32-2-10G **ELEVATION:** B-REAR UPGRADE

ROOF TRUSSES

ROOF TRUSS SPACING: 24.0 IN. O.C. (TYP.)

PROFILE	QTY / PLY	MARK / TYPE	PITCH TC / BC	SPAN	TRUSS HEIGHT	LUMBER TOP	LUMBER BOT	OVERHANG LEFT / RIGHT	HEEL HEIGHT LEFT / RIGHT	LBS. / BFT.	BUNDLE # / STACK #	LOAD BY: / REMARKS
	1	J13 / JACK-OPEN	10.00 / 0.00	01-10-08	03-01-09	2 X 4	2 X 4	01-03-08 / -00-01-01	01-07-11 / 00-03-08	9.99 / 7.00		

TOTAL # TRUSS= **47.00** TOTAL BFT OF ALL TRUSSES= **1963.55** BFT. TOTAL WEIGHT OF ALL TRUSSES= **3091.83** LBS.

HARDWARE

QTY	ITEM TYPE	MODEL	LENGTH FT-IN-16
2	Hangers	HGUS26-2	
5	Hangers	LJS26DS	
2	Hangers	LUS24	
1	Hangers	LUS24-2	

TOTAL # ITEMS= **10.00**

TAMARACK LUMBER INC.
ALPA LUMBER GROUP

Delivery Shiplist

DATE	09/07/17
SALES REP	Mario

JOB TRACK: 42067 LAYOUT ID: 272253 LOCATION: INNISFIL
BUILDER: BAYVIEW WELLINGTON/ALCONA SHO SUB-BUILDER:
MODEL: S32-2-12G ELEVATION: A OR REAR UPGRADE

ROOF TRUSSES

ROOF TRUSS SPACING: 24.0 IN. O.C. (TYP.)

PROFILE	QTY / PLY	MARK / TYPE	PITCH TC / BC	SPAN	TRUSS HEIGHT	LUMBER TOP	LUMBER BOT	OVERHANG LEFT / RIGHT	HEEL HEIGHT LEFT / RIGHT	LBS. / BFT.	BUNDLE # / STACK #	LOAD BY: / REMARKS
	12	T1 COMMON	6.00 / 0.00	38-04-00	10-09-00	2 X 4	2 X 6	01-03-08 / 01-03-08	01-02-00 / 01-02-00	2346.72 / 1428.00		
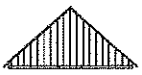	2	G1 COMMON	6.00 / 0.00	38-04-00	10-09-00	2 X 4	2 X 6	01-03-08 / 01-03-08	01-02-00 / 01-02-00	408.08 / 262.66		
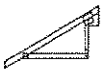	7	T5 JACK-CLOSED	4.00 / 0.00	05-08-08	02-06-04	2 X 4	2 X 4	01-03-08 / 00-00-00	00-03-15 / 02-02-12	140.07 / 88.69		
	1	G6 COMMON	12.00 / 0.00	07-10-00	05-09-08	2 X 4	2 X 4	01-03-08 / 01-03-08	01-10-08 / 01-10-08	42.51 / 28.67		
	3	T7 COMMON	12.00 / 0.00	13-04-00	08-06-08	2 X 4	2 X 4	01-03-08 / 01-03-08	01-10-08 / 01-10-08	207.84 / 132.00		
	1	G7 GABLE	12.00 / 0.00	13-04-00	08-06-08	2 X 4	2 X 4	01-03-08 / 01-03-08	01-10-08 / 01-10-08	71.77 / 45.00		
	1 / 3 Ply	T8 COMMON	12.00 / 0.00	13-04-00	08-06-08	2 X 4	2 X 6	01-03-08 / 01-03-08	01-10-08 / 01-10-08	249.90 / 159.00		
	4	J3 JACK-OPEN	4.00 / 0.00	07-04-08	02-09-07	2 X 4	2 X 4	01-03-08 / 00-00-00	00-03-15 / 02-09-07	88.80 / 58.00		
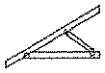	4	J4 JACK-OPEN	4.00 / 0.00	06-04-08	02-05-07	2 X 4	2 X 4	01-03-08 / 00-00-00	00-03-15 / 02-05-07	74.76 / 48.68		

TOTAL # TRUSS= **37.00** TOTAL BFT OF ALL TRUSSES= **2250.70** BFT. TOTAL WEIGHT OF ALL TRUSSES= **3630.45** LBS.

HARDWARE

QTY	ITEM TYPE	MODEL	LENGTH FT-IN-16
6	Hangers	LJS26DS	

TOTAL # ITEMS= **6.00**

DATE	09/07/17
SALES REP	Mario

TAMARACK LUMBER INC.
ALPA LUMBER GROUP

Delivery Shiplist

JOB TRACK: 42067 LAYOUT ID: 272254 LOCATION: INNISFIL
BUILDER: BAYVIEW WELLINGTON/ALCONA SHO SUB-BUILDER:
MODEL: S32-2-12G ELEVATION: B

ROOF TRUSSES

ROOF TRUSS SPACING: 24.0 IN. O.C. (TYP.)

PROFILE	QTY / PLY	MARK TYPE	PITCH TC / BC	SPAN	TRUSS HEIGHT	LUMBER TOP	LUMBER BOT	OVERHANG LEFT / RIGHT	HEEL HEIGHT LEFT / RIGHT	LBS. / BFT.	BUNDLE # / STACK #	LOAD BY: / REMARKS
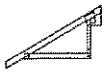	7	T5 JACK-CLOSED	4.00 / 0.00	05-08-08	02-06-04	2 X 4	2 X 4	01-03-08 / 00-00-00	00-03-15 / 02-02-12	140.07 / 88.69		
	1 / 2 Ply	T101 HIP GIRDER	10.00 / 0.00	25-08-00	04-01-04	2 X 4	2 X 6	01-03-08 / 01-03-08	01-07-11 / 01-07-11	245.66 / 152.66		
	1 / 2 Ply	T101Z HIP GIRDER	10.00 / 0.00	25-08-00	04-01-04	2 X 4	2 X 6	01-03-08 / 01-03-08	01-07-11 / 01-07-11	245.66 / 152.66		
	2	T11 HIP	10.00 / 0.00	25-08-00	05-01-04	2 X 4	2 X 4	01-03-08 / 01-03-08	01-07-11 / 01-07-11	214.58 / 139.34		
	2	T12 HIP	10.00 / 0.00	25-08-00	06-01-04	2 X 4	2 X 4	01-03-08 / 01-03-08	01-07-11 / 01-07-11	227.14 / 144.00		
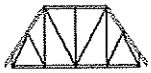	2	T13 HIP	10.00 / 0.00	25-08-00	07-01-04	2 X 4	2 X 4	01-03-08 / 01-03-08	01-07-11 / 01-07-11	232.76 / 145.66		
	2	T14 HIP	10.00 / 0.00	25-08-00	08-01-04	2 X 4	2 X 4	01-03-08 / 01-03-08	01-07-11 / 01-07-11	244.52 / 155.34		
	2	T15 HIP	10.00 / 0.00	25-08-00	09-01-04	2 X 4	2 X 4	01-03-08 / 01-03-08	01-07-11 / 01-07-11	252.90 / 160.00		
	3	T16 HIP	10.00 / 0.00	25-08-00	10-01-04	2 X 4	2 X 4	01-03-08 / 01-03-08	01-07-11 / 01-07-11	387.12 / 245.01		
	3	T22 SCISSORS	10.00 / 6.00	07-10-00	04-10-14	2 X 4	2 X 4	01-03-08 / 01-03-08	01-07-11 / 01-07-11	110.34 / 76.50		
	1	T23 HIP GIRDER	10.00 / 0.00	13-04-00	04-10-07	2 X 4	2 X 6	01-03-08 / 01-03-08	01-07-11 / 01-07-11	69.26 / 44.00		
	1	T24 HIP	10.00 / 0.00	13-04-00	06-06-07	2 X 4	2 X 4	01-03-08 / 01-03-08	01-07-11 / 01-07-11	66.45 / 42.67		
	3	T25 COMMON	10.00 / 0.00	13-04-00	07-02-06	2 X 4	2 X 4	01-03-08 / 01-03-08	01-07-11 / 01-07-11	190.32 / 120.51		
	18	J10 JACK-OPEN	6.00 / 0.00	05-10-08	04-01-04	2 X 4	2 X 4	01-03-08 / 00-00-00	01-02-00 / 04-01-04	302.22 / 192.06		
	2	J11 JACK-OPEN	10.00 / 0.00	03-10-08	04-10-07	2 X 4	2 X 4	01-03-08 / 00-00-00	01-07-11 / 04-10-07	33.66 / 21.34		
	1	J12 JACK-OPEN	10.00 / 0.00	03-10-08	03-01-09	2 X 4	2 X 4	01-03-08 / -02-01-01	01-07-11 / 00-03-08	13.73 / 9.33		
	1	J13 JACK-OPEN	10.00 / 0.00	01-10-08	03-01-09	2 X 4	2 X 4	01-03-08 / -00-01-01	01-07-11 / 00-03-08	9.99 / 7.00		

TOTAL # TRUSS= **54.00** TOTAL BFT OF ALL TRUSSES= **1896.77** BFT. TOTAL WEIGHT OF ALL TRUSSES= **2986.38** LBS.

HARDWARE

QTY	ITEM TYPE	MODEL	LENGTH FT-IN-16

TAMARACK LUMBER INC.
ALPA LUMBER GROUP

Delivery Shiplist

DATE	09/07/17
SALES REP	Mario

JOB TRACK: 42067 LAYOUT ID: 272254 LOCATION: INNISFIL
BUILDER: BAYVIEW WELLINGTON/ALCONA SHO SUB-BUILDER:
MODEL: S32-2-12G ELEVATION: B

HARDWARE

QTY	ITEM TYPE	MODEL	LENGTH FT-IN-16
1	Hangers	HGUS26-2	
3	Hangers	LJS26DS	
2	Hangers	LUS24	
1	Hangers	LUS26-2	

TOTAL # ITEMS= **7.00**

DATE	09/07/17
SALES REP	Mario

TAMARACK LUMBER INC.
ALPA LUMBER GROUP

Delivery Shiplist

JOB TRACK: 42067 LAYOUT ID: 272255 LOCATION: INNISFIL
BUILDER: BAYVIEW WELLINGTON/ALCONA SHO SUB-BUILDER:
MODEL: S32-2-12G ELEVATION: B-REAR UPGRADE

ROOF TRUSSES

ROOF TRUSS SPACING: 24.0 IN. O.C. (TYP.)

PROFILE	QTY / PLY	MARK / TYPE	PITCH TC / BC	SPAN	TRUSS HEIGHT	LUMBER TOP	LUMBER BOT	OVERHANG LEFT / RIGHT	HEEL HEIGHT LEFT / RIGHT	LBS. / BFT.	BUNDLE # / STACK #	LOAD BY: / REMARKS
	7	T5 JACK-CLOSED	4.00 / 0.00	05-08-08	02-06-04	2 X 4	2 X 4	01-03-08 / 00-00-00	00-03-15 / 02-02-12	140.07 / 88.69		
	1 / 2 Ply	T101Z HIP GIRDER	10.00 / 0.00	25-08-00	04-01-04	2 X 4	2 X 6	01-03-08 / 01-03-08	01-07-11 / 01-07-11	245.66 / 152.66		
	1 / 2 Ply	T101Z1 HIP GIRDER	10.00 / 0.00	25-08-00	04-01-04	2 X 4	2 X 6	01-03-08 / 01-03-08	01-07-11 / 01-07-11	245.66 / 152.66		
	2	T11 HIP	10.00 / 0.00	25-08-00	05-01-04	2 X 4	2 X 4	01-03-08 / 01-03-08	01-07-11 / 01-07-11	214.58 / 139.34		
	2	T12 HIP	10.00 / 0.00	25-08-00	06-01-04	2 X 4	2 X 4	01-03-08 / 01-03-08	01-07-11 / 01-07-11	227.14 / 144.00		
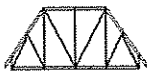	2	T13 HIP	10.00 / 0.00	25-08-00	07-01-04	2 X 4	2 X 4	01-03-08 / 01-03-08	01-07-11 / 01-07-11	232.76 / 145.66		
	2	T14 HIP	10.00 / 0.00	25-08-00	08-01-04	2 X 4	2 X 4	01-03-08 / 01-03-08	01-07-11 / 01-07-11	244.52 / 155.34		
	2	T15 HIP	10.00 / 0.00	25-08-00	09-01-04	2 X 4	2 X 4	01-03-08 / 01-03-08	01-07-11 / 01-07-11	252.90 / 160.00		
	3	T16 HIP	10.00 / 0.00	25-08-00	10-01-04	2 X 4	2 X 4	01-03-08 / 01-03-08	01-07-11 / 01-07-11	387.12 / 245.01		
	3	T22 SCISSORS	10.00 / 6.00	07-10-00	04-10-14	2 X 4	2 X 4	01-03-08 / 01-03-08	01-07-11 / 01-07-11	110.34 / 76.50		
	1	T23 HIP GIRDER	10.00 / 0.00	13-04-00	04-10-07	2 X 4	2 X 6	01-03-08 / 01-03-08	01-07-11 / 01-07-11	69.26 / 44.00		
	1	T24 HIP	10.00 / 0.00	13-04-00	06-06-07	2 X 4	2 X 4	01-03-08 / 01-03-08	01-07-11 / 01-07-11	66.45 / 42.67		
	3	T25 COMMON	10.00 / 0.00	13-04-00	07-02-06	2 X 4	2 X 4	01-03-08 / 01-03-08	01-07-11 / 01-07-11	190.32 / 120.51		
	2	T30 COMMON	10.00 / 0.00	16-00-00	08-03-11	2 X 4	2 X 4	01-03-08 / 01-03-08	01-07-11 / 01-07-11	148.24 / 93.34		
	1	G30 COMMON	10.00 / 0.00	16-00-00	08-03-11	2 X 4	2 X 4	01-03-08 / 01-03-08	01-07-11 / 01-07-11	80.10 / 53.33		
	10	J10 JACK-OPEN	6.00 / 0.00	05-10-08	04-01-04	2 X 4	2 X 4	01-03-08 / 00-00-00	01-02-00 / 04-01-04	167.90 / 106.70		
	2	J11 JACK-OPEN	10.00 / 0.00	03-10-08	04-10-07	2 X 4	2 X 4	01-03-08 / 00-00-00	01-07-11 / 04-10-07	33.66 / 21.34		
	1	J12 JACK-OPEN	10.00 / 0.00	03-10-08	03-01-09	2 X 4	2 X 4	01-03-08 / -02-01-01	01-07-11 / 00-03-08	13.73 / 9.33		

TAMARACK LUMBER INC.
ALPA LUMBER GROUP

Delivery Shiplist

DATE	09/07/17
SALES REP	Mario

JOB TRACK: 42067 **LAYOUT ID:** 272255 **LOCATION:** INNISFIL
BUILDER: BAYVIEW WELLINGTON/ALCONA SHO **SUB-BUILDER:**
MODEL: S32-2-12G **ELEVATION:** B-REAR UPGRADE

ROOF TRUSSES

ROOF TRUSS SPACING: 24.0 IN. O.C. (TYP.)

PROFILE	QTY / PLY	MARK / TYPE	PITCH TC / BC	SPAN	TRUSS HEIGHT	LUMBER TOP	LUMBER BOT	OVERHANG LEFT / RIGHT	HEEL HEIGHT LEFT / RIGHT	LBS. / BFT.	BUNDLE # / STACK #	LOAD BY: / REMARKS
	1	J13 JACK-OPEN	10.00 0.00	01-10-08	03-01-09	2 X 4	2 X 4	01-03-08 -00-01-01	01-07-11 00-03-08	9.99 7.00		

TOTAL # TRUSS= **49.00** TOTAL BFT OF ALL TRUSSES= **1958.08** BFT. TOTAL WEIGHT OF ALL TRUSSES= **3080.40** LBS.

HARDWARE

QTY	ITEM TYPE	MODEL	LENGTH FT-IN-16
2	Hangers	HGUS26-2	
5	Hangers	LJS26DS	
2	Hangers	LUS24	
1	Hangers	LUS26-2	

TOTAL # ITEMS= **10.00**

JOB NAME	TRUSS NAME	QUANTITY	PLY	JOB DESC. 42067	DRWG NO.
266139	T1	12	1	TRUSS DESC.	

Tamarack Roof Truss, Burlington

Version 8.000 S Jan 15 2016 MiTek Industries, Inc. Thu Jun 02 08:35:27 2016 Page 1

ID:IMdHgX4xKuBO_q7_cW6qNlzAehB-Fyt6RvmQq9qJ_HLDJJSHd_fo0DDTPG9uyshoHCzAOHk

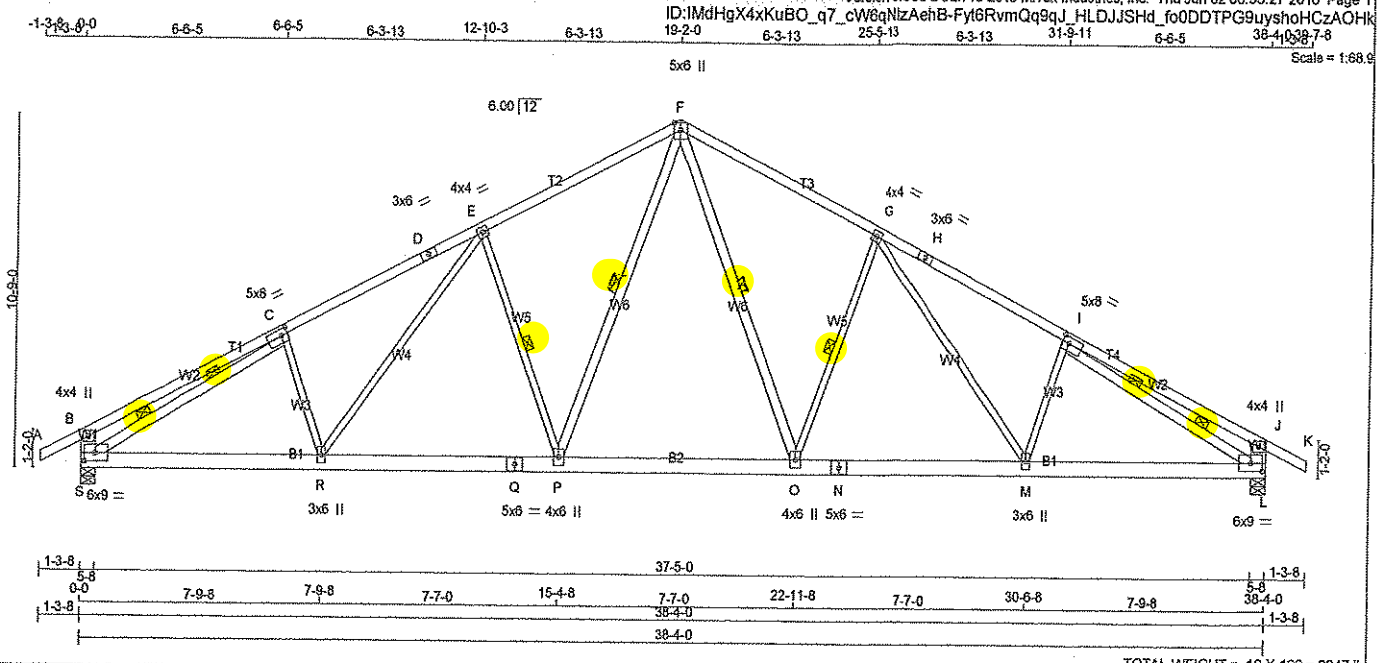

TOTAL WEIGHT = 12 X 196 = 2347 lb

[MI(F)

LUMBER

N. L. G. A. RULES

CHORDS	SIZE		LUMBER	DESCR.
A - D	2x4	DRY	No.2	SPF
D - F	2x4	DRY	No.2	SPF
F - H	2x4	DRY	No.2	SPF
H - K	2x4	DRY	No.2	SPF
S - B	2x6	DRY	No.2	SPF
L - J	2x6	DRY	No.2	SPF
S - Q	2x6	DRY	No.2	SPF
Q - N	2x6	DRY	No.2	SPF
N - L	2x6	DRY	No.2	SPF
ALL WEBS EXCEPT	2x3	DRY	No.2	SPF
F - O	2x4	DRY	No.2	SPF
P - F	2x4	DRY	No.2	SPF
S - C	2x4	DRY	No.2	SPF
I - L	2x4	DRY	No.2	SPF

DRY: SEASONED LUMBER.

PLATES (table is in inches)

JT	TYPE	PLATES	W	LEN	Y	X
B	TMV+p	MT20	4.0	4.0		
C	TMWW-t	MT20	5.0	8.0	2.25	2.50
D	TS-t	MT20	3.0	6.0		
E	TMWW-t	MT20	4.0	4.0		
F	TTWW+p	MT20	5.0	6.0	Edge	
G	TMWW-t	MT20	4.0	4.0		
H	TS-t	MT20	3.0	6.0		
I	TMWW-t	MT20	5.0	8.0	2.25	2.50
J	TMV+p	MT20	4.0	4.0		
L	BMVW1-t	MT20	6.0	9.0	3.00	4.25
M	BMWW+t	MT20	3.0	6.0		
N	BS-t	MT20	5.0	6.0		
O	BMWW+t	MT20	4.0	6.0		
P	BMWW+t	MT20	4.0	6.0		
Q	BS-t	MT20	5.0	6.0		
R	BMWW+t	MT20	3.0	6.0		
S	BMVW1-t	MT20	6.0	9.0	3.00	4.25

Edge - INDICATES REFERENCE CORNER OF PLATE TOUCHES EDGE OF CHORD.

DIMENSIONS, SUPPORTS AND LOADINGS SPECIFIED BY FABRICATOR TO BE VERIFIED BY BUILDING DESIGNER

BEARINGS

JT	FACTORED GROSS REACTION VERT	HORZ	MAXIMUM FACTORED GROSS REACTION DOWN	HORZ	UPLIFT	INPUT BRG IN-SX	REQRD BRG IN-SX
S	3045	0	3045	0	0	5-8	3-5
L	3045	0	3045	0	0	5-8	3-5

UNFACTORED REACTIONS

JT	1ST LCASE COMBINED	MAX./MIN. COMPONENT REACTIONS SNOW	LIVE	PERM.LIVE	WIND	DEAD	SOIL
S	2363	1570 / 0	403 / 0	0 / 0	0 / 0	391 / 0	0 / 0
L	2363	1570 / 0	403 / 0	0 / 0	0 / 0	391 / 0	0 / 0

BEARING MATERIAL TO BE SPF NO.2 OR BETTER AT JOINT(S) S, L

BRACING

TOP CHORD TO BE SHEATHED OR MAX. PURLIN SPACING = 2.59 FT.
MAX. UNBRACED BOTTOM CHORD LENGTH = 10.00 FT. OR RIGID CEILING DIRECTLY APPLIED.

ALL PITCH BREAKS AND PERIMETER CORNER JOINTS MUST BE LATERALLY RESTRAINED.

1 LATERAL BRACE(S) AT 1/ 2 LENGTH OF G-O, E-P. F-P, F-O
2 LATERAL BRACE(S) AT 1/ 3 LENGTH OF C-S, I-L.

END VERTICAL(S) MUST BE SHEATHED OR HAVE BRACES AS INDICATED IN THE MAX. UNBRACED LENGTH COLUMN OF THE TABLE BELOW

LOADING

TOTAL LOAD CASES: (4)

CHORDS

MEMB. FR-TO	MAX. FACTORED FORCE (LBS)	FACTORED VERT. LOAD (PLF) FROM	TO	LC1 MAX CSI (LC)	MAX. UNBRAC LENGTH
A- B	0 / 37	-122.2	-122.2	0.16 (1)	10.00
B- C	0 / 33	-122.2	-122.2	0.64 (1)	10.00
C- D	-4298 / 0	-122.2	-122.2	0.99 (1)	2.59
D- E	-4298 / 0	-122.2	-122.2	0.99 (1)	2.59
E- F	-3517 / 0	-122.2	-122.2	0.87 (1)	2.89
F- G	-3517 / 0	-122.2	-122.2	0.87 (1)	2.89
G- H	-4298 / 0	-122.2	-122.2	0.99 (1)	2.59
H- I	-4298 / 0	-122.2	-122.2	0.99 (1)	2.59
I- J	0 / 33	-122.2	-122.2	0.64 (1)	10.00
J- K	0 / 37	-122.2	-122.2	0.16 (1)	10.00
S- B	-484 / 0	0.0	0.0	0.03 (1)	7.81
L- J	-484 / 0	0.0	0.0	0.03 (1)	7.81
S- R	0 / 3957	-28.0	-28.0	0.60 (1)	10.00
R- Q	0 / 3474	-28.0	-28.0	0.50 (1)	10.00
Q- P	0 / 3474	-28.0	-28.0	0.50 (1)	10.00
P- O	0 / 2657	-28.0	-28.0	0.40 (1)	10.00
O- N	0 / 3474	-28.0	-28.0	0.50 (1)	10.00
N- M	0 / 3474	-28.0	-28.0	0.50 (1)	10.00
M- L	0 / 3957	-28.0	-28.0	0.60 (1)	10.00

WEBS

MEMB. FR-TO	MAX. FACTORED FORCE (LBS)	MAX CSI (LC)
F- O	0 / 1330	0.21 (1)
O- G	-1085 / 0	0.42 (1)
G- M	0 / 646	0.15 (1)
M- I	-340 / 115	0.10 (1)
P- F	0 / 1330	0.21 (1)
E- P	-1085 / 0	0.42 (1)
R- E	0 / 646	0.15 (1)
C- R	-340 / 115	0.10 (1)
S- C	-4658 / 0	0.70 (1)
I- L	-4658 / 0	0.70 (1)

DESIGN CRITERIA

SPECIFIED LOADS:

TOP CH.	LL	=	38.3	PSF
	DL	=	3.0	PSF
BOT CH.	LL	=	10.5	PSF
	DL	=	7.0	PSF
TOTAL LOAD		=	58.7	PSF

SPACING = 24.0 IN. C/C

THIS TRUSS IS DESIGNED FOR RESIDENTIAL OR SMALL BUILDING REQUIREMENTS OF PART 9, NBCC 2010

THIS DESIGN COMPLIES WITH:
- PART 9 OF OBC 2012 , BCBC 2012 , ABC 2014
- CSA 086-09
- TPIC 2011

(55 % OF 54.4 P.S.F. G.S.L. PLUS 8.4 P.S.F. RAIN LOAD) EQUALS 38.3 P.S.F. SPECIFIED ROOF LIVE LOAD

ALLOWABLE DEFL.(LL)= L/360 (1.28")
CALCULATED VERT. DEFL.(LL) = L/ 999 (0.25")
ALLOWABLE DEFL.(TL)= L/360 (1.28")
CALCULATED VERT. DEFL.(TL) = L/ 999 (0.39")

CSI: TC=0.99 (G-I:1) , BC=0.60 (L-M:1) , WB=0.70 (I-L:1) , SSI=0.32 (I-J:1)

DOL LUMBER=1.00 NAIL=1.00 LS BEND=1.10 COMP=1.10 SHEAR=1.10 TENS= 1.10

COMPANION LIVE LOAD FACTOR = 0.50

AUTOSOLVE HEELS OFF

TRUSS PLATE MANUFACTURER IS NOT RESPONSIBLE FOR QUALITY CONTROL IN THE TRUSS MANUFACTURING PLANT .

NAIL VALUES

PLATE	GRIP(DRY) (PSI) MAX	MIN	SHEAR (PLI) MAX	MIN	SECTION (PLI) MAX	MIN
MT20	618	354	1667	822	2284	1656

PLATE PLACEMENT TOL. = 0.250 inches

PLATE ROTATION TOL. = 5.0 Deg.

JSI GRIP= 0.90 (G) (INPUT = 0.90)
JSI METAL= 0.88 (C) (INPUT = 1.00)

LICENSED PROFESSIONAL ENGINEER
S. KATSOULAKOS
PROVINCE OF ONTARIO

DWG NO. TAM25696-10
STRUCTURAL COMPONENT ONLY

JOB NAME	TRUSS NAME	QUANTITY	PLY	JOB DESC. 42067	DRWG NO.
266139	G1	2	1	TRUSS DESC.	

Tamarack Roof Truss, Burlington

Version 8.000 S Jan 15 2016 MiTek Industries, Inc. Thu Jun 02 08:35:25 2016 Page 1

ID:IMdHgX4xKuBO_q7_cW6qNlzAehB-IalM0DkAlYabizBrBuPpYZZfYPhsxSbbUYChDKzAOHm

Scale = 1:67.4

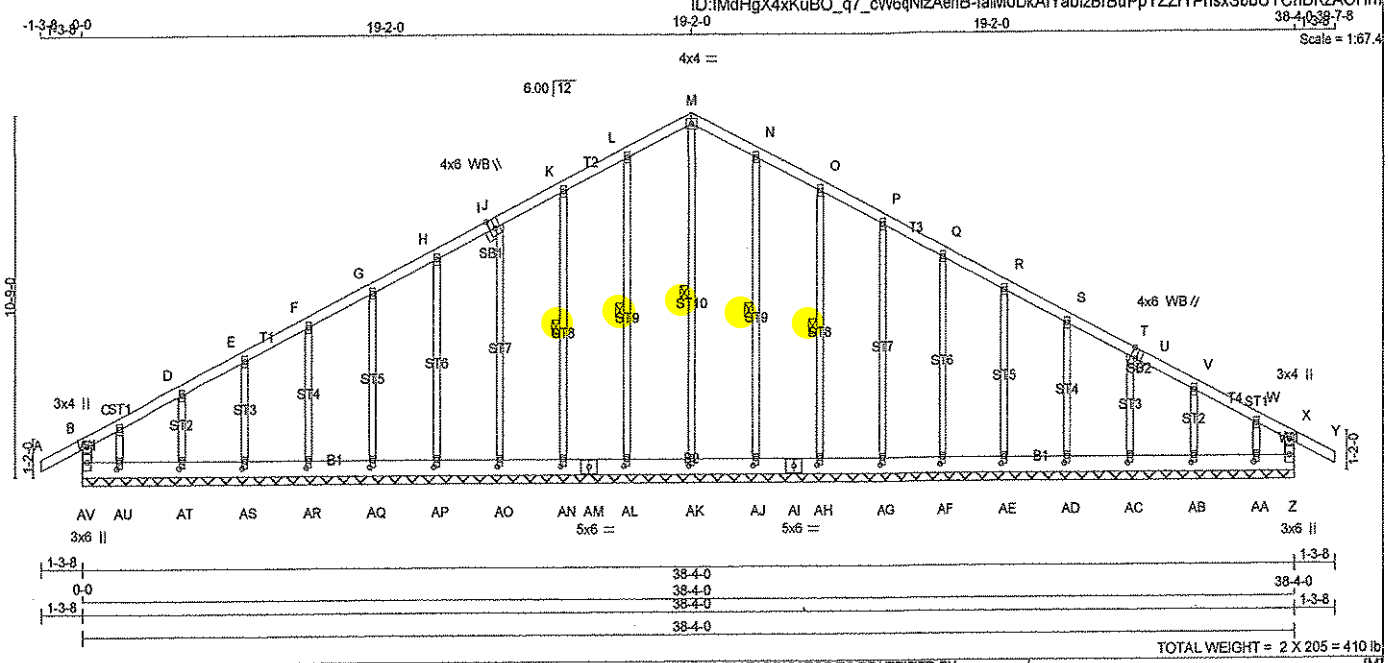

1-3-8 38-4-0 1-3-8

0-0 38-4-0 38-4-0

1-3-8 38-4-0 1-3-8

38-4-0

TOTAL WEIGHT = 2 X 205 = 410 lb

[M]

LUMBER

N. L. G. A. RULES

CHORDS	SIZE		LUMBER	DESCR.
AV- B	2x4	DRY	No.2	SPF
A - I	2x4	DRY	No.2	SPF
I - M	2x4	DRY	No.2	SPF
M - U	2x4	DRY	No.2	SPF
U - Y	2x4	DRY	No.2	SPF
Z - X	2x4	DRY	No.2	SPF
AV- AM	2x6	DRY	No.2	SPF
AM- AI	2x6	DRY	No.2	SPF
AI - Z	2x6	DRY	No.2	SPF
ALL WEBS	2x3	DRY	No.2	SPF
ALL GABLE WEBS	2x3	DRY	No.2	SPF

DRY: SEASONED LUMBER.

GABLE STUDS SPACED AT 2-0-0 OC.

PLATES (table is in inches)

JT	TYPE	PLATES	W	LEN	Y	X
B	TMV+p	MT20	3.0	4.0		
C, D, E, F, G, H, K, L, N, O, P, Q, R, S, V, W						
C	TMW+w	MT20	2.0	4.0		
I	TSW+I	MT20	4.0	6.0	Edge 2.00	
M	TTW-p	MT20	4.0	4.0		
U	TSW+I	MT20	4.0	6.0	Edge 2.00	
X	TMV+p	MT20	3.0	4.0		
Z	BMV1+p	MT20	3.0	6.0		
AA, AB, AC, AD, AE, AF, AG, AH, AJ, AK, AL, AN, AO, AP, AQ, AR, AS, AT, AU						
AA	BMW1+w	MT20	2.0	4.0	2.50	1.00
AI	BS-t	MT20	5.0	6.0		
AM	BS-t	MT20	5.0	6.0		
AV	BMV1+p	MT20	3.0	6.0		

Edge - INDICATES REFERENCE CORNER OF PLATE TOUCHES EDGE OF CHORD.

WB - INDICATES BLOCKING REQUIRED

DIMENSIONS, SUPPORTS AND LOADINGS SPECIFIED BY FABRICATOR TO BE VERIFIED BY BUILDING DESIGNER

BEARINGS

THIS TRUSS DESIGNED FOR CONTINUOUS BEARINGS.

THIS TRUSS REQUIRES RIGID SHEATHING ON EXPOSED FACE.

BEARING MATERIAL TO BE SPF NO.2 OR BETTER AT JOINT(S)

BRACING

TOP CHORD TO BE SHEATHED OR MAX. PURLIN SPACING = 6.25 FT.
MAX. UNBRACED BOTTOM CHORD LENGTH = 6.25 FT. OR RIGID CEILING DIRECTLY APPLIED.

ALL PITCH BREAKS AND PERIMETER CORNER JOINTS MUST BE LATERALLY RESTRAINED.

1 LATERAL BRACE(S) AT 1/ 2 LENGTH OF M-AK, L-AL, K-AN, N-AJ, O-AH.

END VERTICAL(S) MUST BE SHEATHED OR HAVE BRACES AS INDICATED IN THE MAX. UNBRACED LENGTH COLUMN OF THE TABLE BELOW

LOADING

TOTAL LOAD CASES: (4)

CHORDS

MEMB. FR-TO	MAX. FACTORED FORCE (LBS)	FACTORED VERT. LOAD (PLF) FROM	TO	LC1	MAX CSI (LC)	MAX. UNBRAC LENGTH
AV- B	-302 / 0	0.0	0.0	0.06 (1)		7.81
A- B	0 / 37	-122.2	-122.2	0.16 (1)		10.00
B- C	-46 / 0	-122.2	-122.2	0.11 (1)		6.25
C- D	-6 / 0	-122.2	-122.2	0.06 (1)		10.00
D- E	-6 / 0	-122.2	-122.2	0.06 (1)		10.00
E- F	0 / 1	-122.2	-122.2	0.06 (1)		10.00
F- G	0 / 5	-122.2	-122.2	0.06 (1)		10.00
G- H	0 / 8	-122.2	-122.2	0.06 (1)		10.00
H- I	0 / 11	-122.2	-122.2	0.06 (1)		10.00
I- J	0 / 11	-122.2	-122.2	0.06 (1)		10.00
J- K	0 / 13	-122.2	-122.2	0.06 (1)		10.00
K- L	0 / 16	-122.2	-122.2	0.06 (1)		10.00
L- M	0 / 17	-122.2	-122.2	0.06 (1)		10.00
M- N	0 / 17	-122.2	-122.2	0.06 (1)		10.00
N- O	0 / 16	-122.2	-122.2	0.06 (1)		10.00
O- P	0 / 13	-122.2	-122.2	0.06 (1)		10.00
P- Q	0 / 11	-122.2	-122.2	0.06 (1)		10.00
Q- R	0 / 8	-122.2	-122.2	0.06 (1)		10.00
R- S	0 / 5	-122.2	-122.2	0.06 (1)		10.00
S- T	0 / 1	-122.2	-122.2	0.06 (1)		10.00
T- U	-6 / 0	-122.2	-122.2	0.06 (1)		10.00
U- V	-6 / 0	-122.2	-122.2	0.06 (1)		10.00
V- W	-6 / 0	-122.2	-122.2	0.06 (1)		10.00
W- X	-46 / 0	-122.2	-122.2	0.11 (1)		6.25
X- Y	0 / 37	-122.2	-122.2	0.16 (1)		10.00
Z- X	-302 / 0	0.0	0.0	0.06 (1)		7.81
AV-AU	0 / 17	-28.0	-28.0	0.03 (1)		10.00
AU-AT	0 / 11	-28.0	-28.0	0.01 (2)		10.00
AT-AS	0 / 4	-28.0	-28.0	0.01 (2)		10.00
AS-AR	0 / 0	-28.0	-28.0	0.01 (2)		10.00
AR-AQ	-4 / 0	-28.0	-28.0	0.01 (2)		10.00
AQ-AP	-7 / 0	-28.0	-28.0	0.01 (2)		10.00
AP-AO	-10 / 0	-28.0	-28.0	0.01 (2)		10.00
AO-AN	-12 / 0	-28.0	-28.0	0.01 (2)		6.25
AN-AM	-14 / 0	-28.0	-28.0	0.01 (2)		6.25
AM-AL	-14 / 0	-28.0	-28.0	0.01 (2)		6.25
AL-AK	-16 / 0	-28.0	-28.0	0.01 (2)		6.25
AK-AJ	-16 / 0	-28.0	-28.0	0.01 (2)		6.25
AJ-AI	-14 / 0	-28.0	-28.0	0.01 (2)		6.25
AI-AH	-14 / 0	-28.0	-28.0	0.01 (2)		6.25
AH-AG	-12 / 0	-28.0	-28.0	0.01 (2)		6.25
AG-AF	-10 / 0	-28.0	-28.0	0.01 (2)		10.00

WEBS

MEMB. FR-TO	MAX. FACTORED FORCE (LBS)	MAX CSI (LC)
AK- M	-266 / 0	0.21 (1)
AL- L	-250 / 0	0.15 (1)
AN- K	-242 / 0	0.11 (1)
AO- J	-244 / 0	0.26 (1)
AP- H	-243 / 0	0.17 (1)
AQ- G	-243 / 0	0.12 (1)
AR- F	-243 / 0	0.08 (1)
AS- E	-238 / 0	0.05 (1)
AT- D	-258 / 0	0.04 (1)
AU- C	-112 / 0	0.02 (1)
AJ- N	-250 / 0	0.15 (1)
AH- O	-242 / 0	0.11 (1)
AG- P	-244 / 0	0.26 (1)
AF- Q	-243 / 0	0.17 (1)
AE- R	-243 / 0	0.12 (1)
AD- S	-243 / 0	0.08 (1)
AC- T	-238 / 0	0.05 (1)
AB- V	-258 / 0	0.04 (1)
AA- W	-112 / 0	0.02 (1)

DESIGN CRITERIA

SPECIFIED LOADS:

TOP CH.	LL	=	38.3	PSF
	DL	=	3.0	PSF
BOT CH.	LL	=	10.5	PSF
	DL	=	7.0	PSF
TOTAL LOAD		=	58.7	PSF

SPACING = 24.0 IN. C/C

THIS TRUSS IS DESIGNED FOR RESIDENTIAL OR SMALL BUILDING REQUIREMENTS OF PART 9, NBCC 2010

THIS DESIGN COMPLIES WITH:
- PART 9 OF OBC 2012 , BCBC 2012 , ABC 2014
- CSA 086-09
- TPIC 2011

DESIGN ASSUMPTIONS
-OVERHANG NOT TO BE ALTERED OR CUT OFF.

(55 % OF 54.4 P.S.F. G.S.L. PLUS 8.4 P.S.F. RAIN LOAD) EQUALS 38.3 P.S.F. SPECIFIED ROOF LIVE LOAD

CSI: TC=0.16 (A-B:1) , BC=0.03 (Z-AA:1) , WB=0.26 (P-AG:1) , SSI=0.12 (A-B:1)

DOL LUMBER=1.00 NAIL=1.00 LS BEND=1.10 COMP=1.10 SHEAR=1.10 TENS= 1.10

COMPANION LIVE LOAD FACTOR = 0.50

TRUSS PLATE MANUFACTURER IS NOT RESPONSIBLE FOR QUALITY CONTROL IN THE TRUSS MANUFACTURING PLANT .

NAIL VALUES

PLATE	GRIP(DRY) (PSI) MAX	MIN	SHEAR (PLI) MAX	MIN	SECTION (PLI) MAX	MIN
MT20	618	354	1667	822	2284	1656

PLATE PLACEMENT TOL. = 0.250 inches

PLATE ROTATION TOL. = 5.0 Deg.

JSI GRIP= 0.51 (AS) (INPUT = 0.90)
JSI METAL= 0.07 (M) (INPUT = 1.00)

LICENSED PROFESSIONAL ENGINEER
6216
S. KATSOULAKOS
PROVINCE OF ONTARIO

DWG NO. TAM25697-16
STRUCTURAL COMPONENT ONLY

CONTINUED ON PAGE 2

JOB NAME	TRUSS NAME	QUANTITY	PLY	JOB DESC. 42067	DRWG NO.
266139	G1	2	1	TRUSS DESC.	

LOADING
TOTAL LOAD CASES: (4)

CHORDS

MEMB. FR-TO	MAX. FACTORED FORCE (LBS)	FACTORED VERT. LOAD LC1 (PLF) FROM	TO	MAX CSI (LC)	MAX. UNBRAC LENGTH
AF-AE	-7 / 0	-28.0	-28.0	0.01 (2)	10.00
AE-AD	-4 / 0	-28.0	-28.0	0.01 (2)	10.00
AD-AC	0 / 0	-28.0	-28.0	0.01 (2)	10.00
AC-AB	0 / 4	-28.0	-28.0	0.01 (2)	10.00
AB-AA	0 / 11	-28.0	-28.0	0.01 (2)	10.00
AA- Z	0 / 17	-28.0	-28.0	0.03 (1)	10.00

WEBS

MEMB. FR-TO	MAX. FACTORED FORCE (LBS)	MAX CSI (LC)

LICENSED PROFESSIONAL ENGINEER
6216
S. KATSOULAKOS
PROVINCE OF ONTARIO

P6 2/2

DWG NO. TAM25697-16
STRUCTURAL
COMPONENT ONLY

JOB NAME	TRUSS NAME	QUANTITY	PLY	JOB DESC. 42087	DRWG NO.
266139	G2	1	1	TRUSS DESC.	

Tamarack Roof Truss, Burlington

Version 8.000 S Jan 15 2016 MiTek Industries, Inc. Thu Jun 02 08:35:26 2016 Page 1

ID:IMdHgX4xKuBO_q7_cW6qNzAehB-mmJkDZlo3riSM7m1Icw25n6q6p1xgyQIjCyElmzAOHI

Scale = 1:39.3

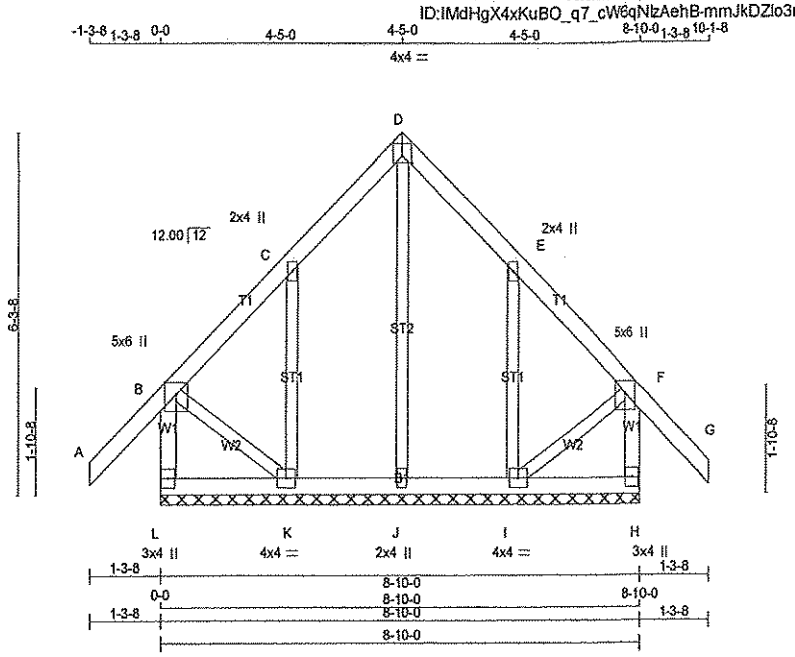

TOTAL WEIGHT = 47 lb

[M]

LUMBER

N. L. G. A. RULES

CHORDS	SIZE		LUMBER	DESCR.
L - B	2x4	DRY	No.2	SPF
A - D	2x4	DRY	No.2	SPF
D - G	2x4	DRY	No.2	SPF
H - F	2x4	DRY	No.2	SPF
L - H	2x4	DRY	No.2	SPF
ALL WEBS	2x3	DRY	No.2	SPF
ALL GABLE WEBS	2x3	DRY	No.2	SPF

DRY: SEASONED LUMBER.

GABLE STUDS SPACED AT 2-0-0 OC.

PLATES (table is in inches)

JT	TYPE	PLATES	W	LEN	Y	X
B	TMVW+p	MT20	5.0	6.0	Edge	
C	TMW+w	MT20	2.0	4.0		
D	TTW-p	MT20	4.0	4.0	1.50	2.00
E	TMW+w	MT20	2.0	4.0		
F	TMVW+p	MT20	5.0	6.0	Edge	
H	BMV1+p	MT20	3.0	4.0		
I	BMWW1-t	MT20	4.0	4.0		
J	BMW1+w	MT20	2.0	4.0		
K	BMWW1-t	MT20	4.0	4.0		
L	BMV1+p	MT20	3.0	4.0		

Edge - INDICATES REFERENCE CORNER OF PLATE TOUCHES EDGE OF CHORD.

DIMENSIONS, SUPPORTS AND LOADINGS SPECIFIED BY FABRICATOR TO BE VERIFIED BY BUILDING DESIGNER

BEARINGS

THIS TRUSS DESIGNED FOR CONTINUOUS BEARINGS.

THIS TRUSS REQUIRES RIGID SHEATHING ON EXPOSED FACE.

BEARING MATERIAL TO BE SPF NO.2 OR BETTER AT JOINT(S)

BRACING

TOP CHORD TO BE SHEATHED OR MAX. PURLIN SPACING = 6.25 FT.
MAX. UNBRACED BOTTOM CHORD LENGTH = 10.00 FT. OR RIGID CEILING DIRECTLY APPLIED.

ALL PITCH BREAKS AND PERIMETER CORNER JOINTS MUST BE LATERALLY RESTRAINED.

LOADING

TOTAL LOAD CASES: (4)

CHORDS

MEMB. FR-TO	MAX. FACTORED FORCE (LBS)	FACTORED VERT. LOAD (PLF) FROM	TO	LC1	MAX CSI (LC)	MAX. UNBRAC LENGTH
L- B	-324 / 0	0.0	0.0	0.04 (1)	7.81	
A- B	0 / 60	-122.2	-122.2	0.17 (1)	10.00	
B- C	-16 / 0	-122.2	-122.2	0.10 (1)	6.25	
C- D	-50 / 0	-122.2	-122.2	0.10 (1)	6.25	
D- E	-50 / 0	-122.2	-122.2	0.10 (1)	6.25	
E- F	-16 / 0	-122.2	-122.2	0.10 (1)	6.25	
F- G	0 / 60	-122.2	-122.2	0.17 (1)	10.00	
H- F	-324 / 0	0.0	0.0	0.04 (1)	7.81	
L- K	0 / 0	-28.0	-28.0	0.04 (3)	10.00	
K- J	0 / 18	-28.0	-28.0	0.04 (2)	10.00	
J- I	0 / 18	-28.0	-28.0	0.04 (2)	10.00	
I- H	0 / 0	-28.0	-28.0	0.04 (3)	10.00	

WEBS

MEMB. FR-TO	MAX. FACTORED FORCE (LBS)	MAX CSI (LC)
J- D	-153 / 0	0.09 (1)
K- C	-327 / 0	0.09 (1)
I- E	-327 / 0	0.09 (1)
B- K	0 / 31	0.01 (1)
I- F	0 / 31	0.01 (1)

DESIGN CRITERIA

SPECIFIED LOADS:

TOP CH.	LL	=	38.3	PSF
	DL	=	3.0	PSF
BOT CH.	LL	=	10.5	PSF
	DL	=	7.0	PSF
TOTAL LOAD		=	58.7	PSF

SPACING = 24.0 IN. C/C

THIS TRUSS IS DESIGNED FOR RESIDENTIAL OR SMALL BUILDING REQUIREMENTS OF PART 9, NBCC 2010

THIS DESIGN COMPLIES WITH:
- PART 9 OF OBC 2012 , BCBC 2012 , ABC 2014
- CSA 086-09
- TPIC 2011

(55 % OF 54.4 P.S.F. G.S.L. PLUS 8.4 P.S.F. RAIN LOAD) EQUALS 38.3 P.S.F. SPECIFIED ROOF LIVE LOAD

CSI: TC=0.17 (F-G:1) , BC=0.04 (J-K:2) , WB=0.09 (D-J:1) , SSI=0.10 (B-C:1)

DOL LUMBER=1.00 NAIL=1.00 LS BEND=1.10 COMP=1.10 SHEAR=1.10 TENS= 1.10

COMPANION LIVE LOAD FACTOR = 0.50

TRUSS PLATE MANUFACTURER IS NOT RESPONSIBLE FOR QUALITY CONTROL IN THE TRUSS MANUFACTURING PLANT .

NAIL VALUES

PLATE	GRIP(DRY) (PSI) MAX	MIN	SHEAR (PLI) MAX	MIN	SECTION (PLI) MAX	MIN
MT20	618	354	1667	822	2284	1656

PLATE PLACEMENT TOL. = 0.250 inches

PLATE ROTATION TOL. = 5.0 Deg.

JSI GRIP= 0.30 (D) (INPUT = 0.90)
JSI METAL= 0.09 (E) (INPUT = 1.00)

LICENSED PROFESSIONAL ENGINEER
6216
S. KATSOULAKOS
PROVINCE OF ONTARIO

DWG NO. TAM 25698-16
STRUCTURAL
COMPONENT ONLY

JOB NAME	TRUSS NAME	QUANTITY	PLY	JOB DESC. 42067	DRWG NO.
266139	T3	3	1	TRUSS DESC.	

Tamarack Roof Truss, Burlington

Version 8.000 S Jan 15 2016 MiTek Industries, Inc. Thu Jun 02 08:35:27 2016 Page 1

ID:IMdHgX4xKuBO_q7_cW6qNlzAehB-Fyt6RvmQq9qJ_HLDJJSHd_fz_DEKPD1uyshoHCzAOHk

Scale = 1:56.6

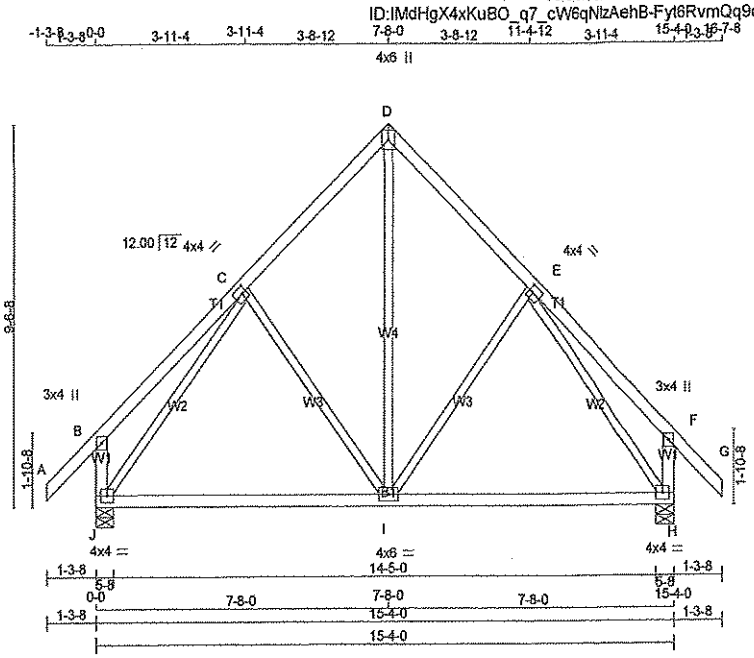

TOTAL WEIGHT = 3 X 78 = 234 lb

[M][F]

LUMBER

N. L. G. A. RULES

CHORDS	SIZE		LUMBER	DESCR.
A - D	2x4	DRY	No.2	SPF
D - G	2x4	DRY	No.2	SPF
J - B	2x4	DRY	No.2	SPF
H - F	2x4	DRY	No.2	SPF
J - H	2x4	DRY	No.2	SPF
ALL WEBS EXCEPT	2x3	DRY	No.2	SPF

DRY: SEASONED LUMBER.

PLATES (table is in inches)

JT	TYPE	PLATES	W	LEN	Y	X
B	TMV+p	MT20	3.0	4.0		
C	TMWW-t	MT20	4.0	4.0	2.00	1.25
D	TTW+p	MT20	4.0	6.0		
E	TMWW-t	MT20	4.0	4.0	2.00	1.25
F	TMV+p	MT20	3.0	4.0		
H	BMVW1-t	MT20	4.0	4.0		
I	BMWWW-t	MT20	4.0	6.0		
J	BMVW1-t	MT20	4.0	4.0		

DIMENSIONS, SUPPORTS AND LOADINGS SPECIFIED BY FABRICATOR TO BE VERIFIED BY BUILDING DESIGNER

BEARINGS

JT	FACTORED GROSS REACTION VERT	HORZ	MAXIMUM FACTORED GROSS REACTION DOWN	HORZ	UPLIFT	INPUT BRG IN-SX	REQRD BRG IN-SX
J	1322	0	1322	0	0	5-8	1-8
H	1322	0	1322	0	0	5-8	1-8

UNFACTORED REACTIONS

JT	1ST LCASE COMBINED	MAX./MIN. COMPONENT REACTIONS SNOW	LIVE	PERM.LIVE	WIND	DEAD	SOIL
J	1016	693 / 0	161 / 0	0 / 0	0 / 0	162 / 0	0 / 0
H	1016	693 / 0	161 / 0	0 / 0	0 / 0	162 / 0	0 / 0

BEARING MATERIAL TO BE SPF NO.2 OR BETTER AT JOINT(S) J, H

BRACING

TOP CHORD TO BE SHEATHED OR MAX. PURLIN SPACING = 6.25 FT.
MAX. UNBRACED BOTTOM CHORD LENGTH = 10.00 FT. OR RIGID CEILING DIRECTLY APPLIED.

ALL PITCH BREAKS AND PERIMETER CORNER JOINTS MUST BE LATERALLY RESTRAINED.

LOADING

TOTAL LOAD CASES: (4)

CHORDS

MEMB. FR-TO	MAX. FACTORED FORCE (LBS)	FACTORED VERT. LOAD (PLF) FROM	TO	LC1 CSI (LC)	MAX. UNBRAC LENGTH
A- B	0 / 60	-122.2	-122.2	0.17 (1)	10.00
B- C	0 / 39	-122.2	-122.2	0.29 (1)	10.00
C- D	-748 / 0	-122.2	-122.2	0.23 (1)	6.25
D- E	-748 / 0	-122.2	-122.2	0.23 (1)	6.25
E- F	0 / 39	-122.2	-122.2	0.29 (1)	10.00
F- G	0 / 60	-122.2	-122.2	0.17 (1)	10.00
J- B	-347 / 0	0.0	0.0	0.04 (1)	7.81
H- F	-347 / 0	0.0	0.0	0.04 (1)	7.81
J- I	0 / 637	-28.0	-28.0	0.54 (2)	10.00
I- H	0 / 637	-28.0	-28.0	0.54 (2)	10.00

WEBS

MEMB. FR-TO	MAX. FACTORED FORCE (LBS)	MAX CSI (LC)
I- D	0 / 638	0.14 (1)
I- E	-230 / 34	0.18 (1)
C- I	-230 / 34	0.18 (1)
J- C	-1098 / 0	0.84 (1)
E- H	-1098 / 0	0.84 (1)

DESIGN CRITERIA

SPECIFIED LOADS:

TOP CH.	LL	=	38.3	PSF
	DL	=	3.0	PSF
BOT CH.	LL	=	10.5	PSF
	DL	=	7.0	PSF
TOTAL LOAD		=	58.7	PSF

SPACING = 24.0 IN. C/C

THIS TRUSS IS DESIGNED FOR RESIDENTIAL OR SMALL BUILDING REQUIREMENTS OF PART 9, NBCC 2010

THIS DESIGN COMPLIES WITH:
- PART 9 OF OBC 2012 , BCBC 2012 , ABC 2014
- CSA 086-09
- TPIC 2011

(55 % OF 54.4 P.S.F. G.S.L. PLUS 8.4 P.S.F. RAIN LOAD) EQUALS 38.3 P.S.F. SPECIFIED ROOF LIVE LOAD

ALLOWABLE DEFL.(LL)= L/360 (0.51")
CALCULATED VERT. DEFL.(LL) = L/ 999 (0.10")
ALLOWABLE DEFL.(TL)= L/360 (0.51")
CALCULATED VERT. DEFL.(TL) = L/ 999 (0.17")

CSI: TC=0.29 (B-C:1) , BC=0.54 (I-J:2) , WB=0.84 (C-J:1) , SSI=0.18 (I-J:3)

DOL LUMBER=1.00 NAIL=1.00 LS BEND=1.10 COMP=1.10 SHEAR=1.10 TENS= 1.10

COMPANION LIVE LOAD FACTOR = 0.50

TRUSS PLATE MANUFACTURER IS NOT RESPONSIBLE FOR QUALITY CONTROL IN THE TRUSS MANUFACTURING PLANT .

NAIL VALUES

PLATE	GRIP(DRY) (PSI) MAX	MIN	SHEAR (PLI) MAX	MIN	SECTION (PLI) MAX	MIN
MT20	618	354	1667	822	2284	1656

PLATE PLACEMENT TOL. = 0.250 inches

PLATE ROTATION TOL. = 5.0 Deg.

JSI GRIP= 0.87 (E) (INPUT = 0.90)
JSI METAL= 0.42 (E) (INPUT = 1.00)

LICENSED PROFESSIONAL ENGINEER
6216
S. KATSOULAKOS
PROVINCE OF ONTARIO

DWG NO. TAM25699-16
STRUCTURAL
COMPONENT ONLY

JOB NAME	TRUSS NAME	QUANTITY	PLY	JOB DESC. 42067	DRWG NO.
266139	G3	1	1	TRUSS DESC.	

Tamarack Roof Truss, Burlington

Version 8.000 S Jan 15 2016 MiTek Industries, Inc. Thu Jun 02 08:35:26 2016 Page 1

ID:IMdHgX4xKuBO_q7_cW6qNlzAehB-mmJkDZlo3riSM7m1Icw25n6q6p1AgvSljCyElmzAOHI

Scale = 1:57.2

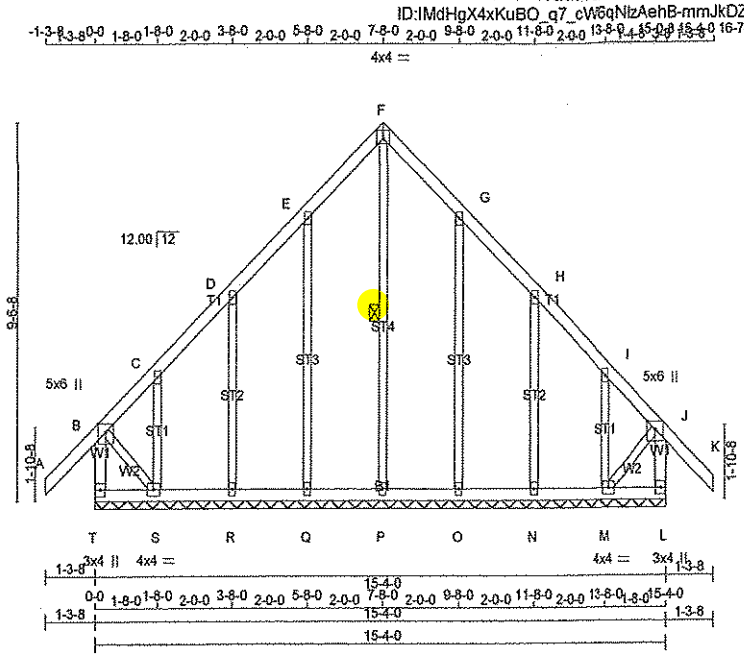

TOTAL WEIGHT = 85 lb

(M)

LUMBER

N. L. G. A. RULES

CHORDS	SIZE		LUMBER	DESCR.
A - F	2x4	DRY	No.2	SPF
F - K	2x4	DRY	No.2	SPF
T - B	2x4	DRY	No.2	SPF
L - J	2x4	DRY	No.2	SPF
T - L	2x4	DRY	No.2	SPF
ALL WEBS	2x3	DRY	No.2	SPF
ALL GABLE WEBS	2x3	DRY	No.2	SPF

DRY: SEASONED LUMBER.

GABLE STUDS SPACED AT 2-0-0 OC.

PLATES (table is in inches)

JT	TYPE	PLATES	W	LEN	Y	X
B	TMVW+p	MT20	5.0	6.0	Edge	
C, D, E, G, H, I						
C	TMW+w	MT20	2.0	4.0		
F	TTW-p	MT20	4.0	4.0	1.50	2.00
J	TMVW+p	MT20	5.0	6.0	Edge	
L	BMV1+p	MT20	3.0	4.0		
M	BMWW1-t	MT20	4.0	4.0		
N, O, P, Q, R						
N	BMW1+w	MT20	2.0	4.0		
S	BMWW1-t	MT20	4.0	4.0		
T	BMV1+p	MT20	3.0	4.0		

Edge - INDICATES REFERENCE CORNER OF PLATE TOUCHES EDGE OF CHORD.

DIMENSIONS, SUPPORTS AND LOADINGS SPECIFIED BY FABRICATOR TO BE VERIFIED BY BUILDING DESIGNER

BEARINGS

THIS TRUSS DESIGNED FOR CONTINUOUS BEARINGS.

THIS TRUSS REQUIRES RIGID SHEATHING ON EXPOSED FACE.

BEARING MATERIAL TO BE SPF NO.2 OR BETTER AT JOINT(S)

BRACING

TOP CHORD TO BE SHEATHED OR MAX. PURLIN SPACING = 6.25 FT.
MAX. UNBRACED BOTTOM CHORD LENGTH = 10.00 FT. OR RIGID CEILING DIRECTLY APPLIED.

ALL PITCH BREAKS AND PERIMETER CORNER JOINTS MUST BE LATERALLY RESTRAINED.

1 LATERAL BRACE(S) AT 1/ 2 LENGTH OF F-P.

END VERTICAL(S) MUST BE SHEATHED OR HAVE BRACES AS INDICATED IN THE MAX. UNBRACED LENGTH COLUMN OF THE TABLE BELOW

LOADING

TOTAL LOAD CASES: (4)

CHORDS

MAX. MEMB. FR-TO	FACTORED FORCE (LBS)	FACTORED VERT. LOAD (PLF) FROM	TO	LC1 MAX CSI (LC)	MAX. UNBRAC LENGTH
A- B	0 / 60	-122.2	-122.2	0.17 (1)	10.00
B- C	-93 / 0	-122.2	-122.2	0.16 (1)	6.25
C- D	-29 / 0	-122.2	-122.2	0.06 (1)	6.25
D- E	-30 / 0	-122.2	-122.2	0.07 (1)	6.25
E- F	-44 / 0	-122.2	-122.2	0.07 (1)	6.25
F- G	-44 / 0	-122.2	-122.2	0.07 (1)	6.25
G- H	-30 / 0	-122.2	-122.2	0.07 (1)	6.25
H- I	-29 / 0	-122.2	-122.2	0.06 (1)	6.25
I- J	-93 / 0	-122.2	-122.2	0.16 (1)	6.25
J- K	0 / 60	-122.2	-122.2	0.17 (1)	10.00
T- B	-395 / 0	0.0	0.0	0.04 (1)	7.81
L- J	-395 / 0	0.0	0.0	0.04 (1)	7.81
T- S	0 / 0	-28.0	-28.0	0.02 (2)	10.00
S- R	0 / 28	-28.0	-28.0	0.02 (2)	10.00
R- Q	0 / 23	-28.0	-28.0	0.02 (2)	10.00
Q- P	0 / 19	-28.0	-28.0	0.02 (2)	10.00
P- O	0 / 19	-28.0	-28.0	0.02 (2)	10.00
O- N	0 / 23	-28.0	-28.0	0.02 (2)	10.00
N- M	0 / 28	-28.0	-28.0	0.02 (2)	10.00
M- L	0 / 0	-28.0	-28.0	0.02 (2)	10.00

WEBS

MEMB. FR-TO	FACTORED FORCE (LBS)	MAX CSI (LC)
P- F	-170 / 0	0.10 (1)
Q- E	-274 / 0	0.28 (1)
R- D	-251 / 0	0.12 (1)
S- C	-132 / 0	0.03 (1)
O- G	-274 / 0	0.28 (1)
N- H	-251 / 0	0.12 (1)
M- I	-132 / 0	0.03 (1)
M- J	0 / 44	0.01 (1)
B- S	0 / 44	0.01 (1)

DESIGN CRITERIA

SPECIFIED LOADS:

TOP CH.	LL	=	38.3	PSF
	DL	=	3.0	PSF
BOT CH.	LL	=	10.5	PSF
	DL	=	7.0	PSF
TOTAL LOAD		=	58.7	PSF

SPACING = 24.0 IN. C/C

THIS TRUSS IS DESIGNED FOR RESIDENTIAL OR SMALL BUILDING REQUIREMENTS OF PART 9, NBCC 2010

THIS DESIGN COMPLIES WITH:
- PART 9 OF OBC 2012 , BCBC 2012 , ABC 2014
- CSA 086-09
- TPIC 2011

DESIGN ASSUMPTIONS
-OVERHANG NOT TO BE ALTERED OR CUT OFF.

(55 % OF 54.4 P.S.F. G.S.L. PLUS 8.4 P.S.F. RAIN LOAD) EQUALS 38.3 P.S.F. SPECIFIED ROOF LIVE LOAD

CSI: TC=0.17 (A-B:1) , BC=0.02 (R-S:2) , WB=0.28 (G-O:1) , SSI=0.09 (A-B:1)

DOL LUMBER=1.00 NAIL=1.00 LS BEND=1.10 COMP=1.10 SHEAR=1.10 TENS= 1.10

COMPANION LIVE LOAD FACTOR = 0.50

TRUSS PLATE MANUFACTURER IS NOT RESPONSIBLE FOR QUALITY CONTROL IN THE TRUSS MANUFACTURING PLANT .

NAIL VALUES

PLATE	GRIP(DRY) (PSI) MAX	MIN	SHEAR (PLI) MAX	MIN	SECTION (PLI) MAX	MIN
MT20	618	354	1667	822	2284	1656

PLATE PLACEMENT TOL. = 0.250 inches

PLATE ROTATION TOL. = 5.0 Deg.

JSI GRIP= 0.34 (F) (INPUT = 0.90)
JSI METAL= 0.08 (G) (INPUT = 1.00)

LICENSED PROFESSIONAL ENGINEER
S. KATSOULAKOS
PROVINCE OF ONTARIO

DWG NO. TAM25700-16
STRUCTURAL
COMPONENT ONLY

JOB NAME	TRUSS NAME	QUANTITY	PLY	JOB DESC. 42067	DRWG NO.
266139	T4	1	3	TRUSS DESC.	

Tamarack Roof Truss, Burlington

Version 8.000 S Jan 15 2016 MiTek Industries, Inc. Thu Jun 02 08:35:27 2016 Page 1
ID:IMdHgX4xKuBO_q7_cW6qNlzAehB-Fyt6RvmQq9qJ_HLDJJSHd_fzxDBxPEYuyshoHCzAOHk

Scale = 1:56.6

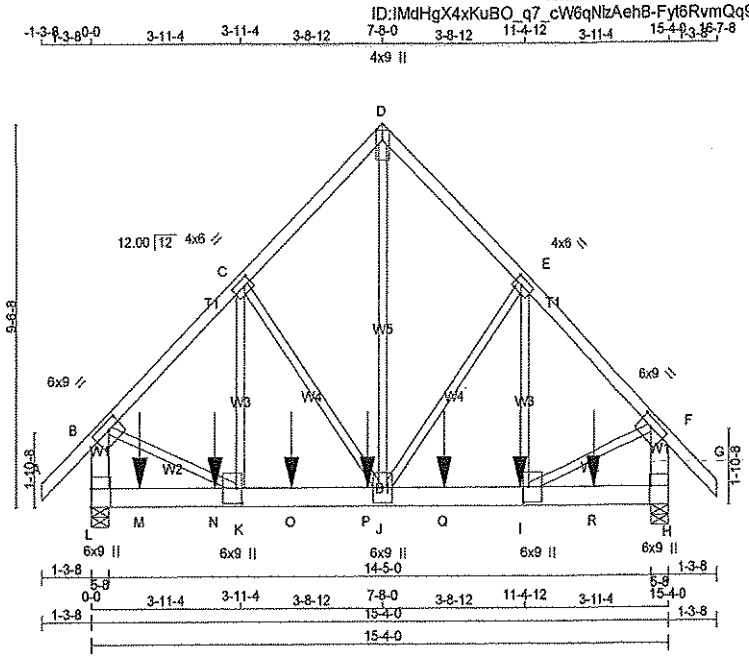

TOTAL WEIGHT = 3 X 94 = 281 lb

[M]

LUMBER
N. L. G. A. RULES

CHORDS	SIZE		LUMBER	DESCR.
A - D	2x4	DRY	No.2	SPF
D - G	2x4	DRY	No.2	SPF
L - B	2x6	DRY	No.2	SPF
H - F	2x6	DRY	No.2	SPF
L - H	2x6	DRY	No.2	SPF
ALL WEBS EXCEPT	2x3	DRY	No.2	SPF

DRY: SEASONED LUMBER.

DESIGN CONSISTS OF 3 TRUSSES BUILT SEPARATELY THEN FASTENED TOGETHER AS FOLLOWS:

CHORDS	#ROWS	SURFACE SPACING (IN)	LOAD(PLF)
TOP CHORDS : (0.122"X3") SPIRAL NAILS			
A- D	1	12	TOP
D- G	1	12	TOP
L- B	2	12	TOP
H- F	2	12	TOP
BOTTOM CHORDS : (0.122"X3") SPIRAL NAILS			
L- H	2	5	SIDE(1100.7)
WEBS : (0.122"X3") SPIRAL NAILS			
2x3	1	6	

STAGGER NAILS BY HALF THE SURFACE SPACING IN ADJACENT PLIES.

GIRDER NAILING ASSUMES NAILED HANGERS ARE FASTENED WITH MIN. 3-0 INCH NAILS.

TOP - COMPONENTS ARE LOADED FROM THE TOP AND MUST BE PLACED ON TOP EDGE OF ALL PLIES FOR THE LOAD TO BE TRANSFERRED TO EACH PLY.

SIDE - PLF SHOWN IS THE EQUIVALENT UDL APPLIED TO ONE SIDE THAT THE CORRESPONDING NAILING PATTERN SHALL BE CAPABLE OF TRANSFERING. REMAINING PLF MUST BE APPLIED ON THE OPPOSITE SIDE OR ON THE TOP.

PLATES (table is in inches)

JT	TYPE	PLATES	W	LEN	Y	X
B	TMVW-t	MT20	6.0	9.0	2.25	4.00
C	TMWW-t	MT20	4.0	6.0	2.00	2.25
D	TTW+p	MT20	4.0	9.0	Edge	
E	TMWW-t	MT20	4.0	6.0	2.00	2.25
F	TMVW-t	MT20	6.0	9.0	2.25	4.00
H	BMV1+t	MT20	6.0	9.0	Edge	0.50
I	BMWW+t	MT20	6.0	9.0	4.50	1.75
J	BMWWW+t	MT20	6.0	9.0		
K	BMWW+t	MT20	6.0	9.0	4.50	1.75
L	BMV1+t	MT20	6.0	9.0	5.50	

Edge - INDICATES REFERENCE CORNER OF PLATE TOUCHES EDGE OF CHORD.

HANGERS NOTES
1)

DIMENSIONS, SUPPORTS AND LOADINGS SPECIFIED BY FABRICATOR TO BE VERIFIED BY BUILDING DESIGNER

BEARINGS

JT	FACTORED GROSS REACTION VERT	HORZ	MAXIMUM FACTORED GROSS REACTION DOWN	HORZ	UPLIFT	INPUT BRG IN-SX	REQRD BRG IN-SX
L	12402	0	12402	0	0	5-8	5-8
H	11361	0	11361	0	0	5-8	5-8

UNFACTORED REACTIONS

JT	1ST LCASE COMBINED	MAX./MIN. COMPONENT REACTIONS SNOW	LIVE	PERM.LIVE	WIND	DEAD	SOIL
L	9567	6457 / 0	1562 / 0	0 / 0	0 / 0	1548 / 0	0 / 0
H	8764	5916 / 0	1430 / 0	0 / 0	0 / 0	1418 / 0	0 / 0

BEARING MATERIAL TO BE SPF NO.2 OR BETTER AT JOINT(S) L, H

BRACING
TOP CHORD TO BE SHEATHED OR MAX. PURLIN SPACING = 3.64 FT.
MAX. UNBRACED BOTTOM CHORD LENGTH = 10.00 FT. OR RIGID CEILING DIRECTLY APPLIED.

ALL PITCH BREAKS AND PERIMETER CORNER JOINTS MUST BE LATERALLY RESTRAINED.

LOADING
TOTAL LOAD CASES: (4)

CHORDS

MEMB. FR-TO	MAX. FACTORED FORCE (LBS)	FACTORED VERT. LOAD (PLF) FROM	TO	LC1	MAX CSI (LC)	MAX. UNBRAC LENGTH
A- B	0 / 60	-122.2	-122.2	0.06 (1)	10.00	
B- C	-10278 / 0	-122.2	-122.2	0.29 (1)	3.64	
C- D	-7762 / 0	-122.2	-122.2	0.19 (1)	4.18	
D- E	-7762 / 0	-122.2	-122.2	0.19 (1)	4.18	
E- F	-10134 / 0	-122.2	-122.2	0.29 (1)	3.66	
F- G	0 / 60	-122.2	-122.2	0.06 (1)	10.00	
L- B	-10329 / 0	0.0	0.0	0.24 (1)	5.74	
H- F	-10190 / 0	0.0	0.0	0.24 (1)	5.78	
L- M	0 / 0	-28.0	-28.0	0.58 (1)	10.00	
M- N	0 / 0	-28.0	-28.0	0.58 (1)	10.00	
N- K	0 / 0	-28.0	-28.0	0.58 (1)	10.00	
K- O	0 / 7280	-28.0	-28.0	0.76 (1)	10.00	
O- P	0 / 7280	-28.0	-28.0	0.76 (1)	10.00	
P- J	0 / 7280	-28.0	-28.0	0.76 (1)	10.00	
J- Q	0 / 7178	-28.0	-28.0	0.61 (1)	10.00	
Q- I	0 / 7178	-28.0	-28.0	0.61 (1)	10.00	
I- R	0 / 0	-28.0	-28.0	0.53 (1)	10.00	
R- H	0 / 0	-28.0	-28.0	0.53 (1)	10.00	

WEBS

MEMB. FR-TO	MAX. FACTORED FORCE (LBS)	MAX CSI (LC)
J- D	0 / 10546	0.79 (1)
J- E	-2985 / 0	0.76 (1)
I- E	0 / 3638	0.27 (1)
C- J	-3164 / 0	0.80 (1)
K- C	0 / 3887	0.29 (1)
B- K	0 / 7751	0.58 (1)
I- F	0 / 7642	0.57 (1)

FACTORED CONCENTRATED LOADS (LBS)

JT	LOC.	LC1	MAX-	MAX+	FACE	DIR.	TYPE
I	11-3-4	-3017	-3017	---	FRONT	VERT	TOTAL
M	1-3-4	-3017	-3017	---	FRONT	VERT	TOTAL
N	3-3-4	-3017	-3017	---	FRONT	VERT	TOTAL
O	5-3-4	-3017	-3017	---	FRONT	VERT	TOTAL
P	7-3-4	-3017	-3017	---	FRONT	VERT	TOTAL
Q	9-3-4	-3017	-3017	---	FRONT	VERT	TOTAL
R	13-3-4	-3017	-3017	---	FRONT	VERT	TOTAL

DESIGN CRITERIA

SPECIFIED LOADS:

TOP CH.	LL	=	38.3	PSF
	DL	=	3.0	PSF
BOT CH.	LL	=	10.5	PSF
	DL	=	7.0	PSF
TOTAL LOAD		=	58.7	PSF

SPACING = 24.0 IN. C/C

THIS TRUSS IS DESIGNED FOR RESIDENTIAL OR SMALL BUILDING REQUIREMENTS OF PART 9, NBCC 2010

THIS DESIGN COMPLIES WITH:
- PART 9 OF OBC 2012 , BCBC 2012 , ABC 2014
- CSA 086-09
- TPIC 2011

(55 % OF 54.4 P.S.F. G.S.L. PLUS 8.4 P.S.F. RAIN LOAD) EQUALS 38.3 P.S.F. SPECIFIED ROOF LIVE LOAD

ALLOWABLE DEFL.(LL)= L/360 (0.51")
CALCULATED VERT. DEFL.(LL) = L/ 999 (0.09")
ALLOWABLE DEFL.(TL)= L/360 (0.51")
CALCULATED VERT. DEFL.(TL) = L/ 999 (0.14")

CSI: TC=0.29 (B-C:1) , BC=0.76 (J-K:1) , WB=0.80 (C-J:1) , SSI=0.82 (K-L:1)

DOL LUMBER=1.00 NAIL=1.00 LS BEND=1.10 COMP=1.10 SHEAR=1.10 TENS= 1.10

COMPANION LIVE LOAD FACTOR = 0.50

AUTOSOLVE HEELS OFF

TRUSS PLATE MANUFACTURER IS NOT RESPONSIBLE FOR QUALITY CONTROL IN THE TRUSS MANUFACTURING PLANT .

NAIL VALUES

PLATE	GRIP(DRY) (PSI) MAX	MIN	SHEAR (PLI) MAX	MIN	SECTION (PLI) MAX	MIN
MT20	618	354	1667	822	2284	1656

PLATE PLACEMENT TOL. = 0.250 inches

PLATE ROTATION TOL. = 5.0 Deg.

JSI GRIP= 0.89 (F) (INPUT = 0.90)
JSI METAL= 0.62 (F) (INPUT = 1.00)

LICENSED PROFESSIONAL ENGINEER
6216
S. KATSOULAKOS
PROVINCE OF ONTARIO

DWG NO. TAM 25701 - 16
STRUCTURAL
COMPONENT ONLY

P6 of 6

CONTINUED ON PAGE 2

JOB NAME	TRUSS NAME	QUANTITY	PLY	JOB DESC. 42067	DRWG NO.
266139	T4	1	3	TRUSS DESC.	

HANGERS NOTES

1) SPECIAL HANGER(S) OR CONNECTION(S) REQUIRED TO SUPPORT CONCENTRATED LOAD(S) 3016.9 lbs FACTORED DOWN AT 1-3-4, 3016.9 lbs FACTORED DOWN AT 3-3-4, 3016.9 lbs FACTORED DOWN AT 5-3-4, 3016.9 lbs FACTORED DOWN AT 7-3-4, 3016.9 lbs FACTORED DOWN AT 9-3-4, AND 3016.9 lbs FACTORED DOWN AT 11-3-4, AND 3016.9 lbs FACTORED DOWN AT 13-3-4 ON BOTTOM CHORD. DESIGN FOR UNSPECIFIED CONNECTION(S) IS DELEGATED TO THE BUILDING DESIGNER.

LICENSED PROFESSIONAL ENGINEER
6216
S. KATSOULAKOS
PROVINCE OF ONTARIO

DWG NO. TAM25701-16
STRUCTURAL
COMPONENT ONLY

JOB NAME	TRUSS NAME	QUANTITY	PLY	JOB DESC. 42067	DRWG NO.
266139	T5	6	1	TRUSS DESC.	

Tamarack Roof Truss, Burlington

Version 8.030 S Oct 5 2016 MiTek Industries, Inc. Thu Sep 07 11:40:45 2017 Page 1

ID:IMdHgX4xKuBO_q7_cW6qNlzAehB-2sd6BX?T2zpYoHe98?p8U6wBEi3UcFs7AoK9S1yg2O0

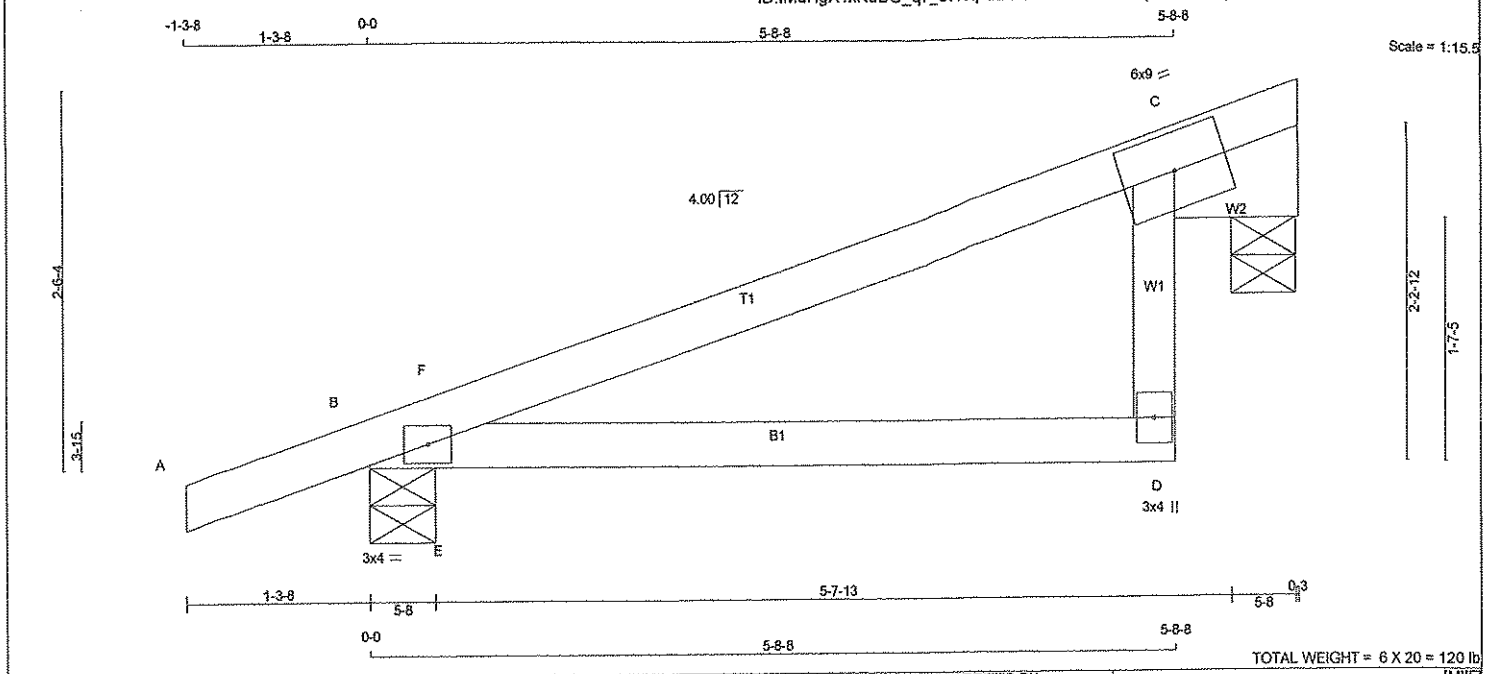

[M][F]

LUMBER

N. L. G. A RULES

CHORDS	SIZE		LUMBER	DESCR.
A - C	2x4	DRY	No.2	SPF
D - C	2x4	DRY	No.2	SPF
B - D	2x4	DRY	No.2	SPF

DRY: SEASONED LUMBER.

PLATES (table is in inches)

JT	TYPE	PLATES	W	LEN	Y	X
B	TMB1-I	MT20	3.0	4.0		
C	TMVW1-t	MT20	6.0	9.0		
D	BMV+p	MT20	3.0	4.0		

DIMENSIONS, SUPPORTS AND LOADINGS SPECIFIED BY FABRICATOR TO BE VERIFIED BY BUILDING DESIGNER

BEARINGS

JT	FACTORED GROSS REACTION VERT	HORZ	MAXIMUM FACTORED GROSS REACTION DOWN	HORZ	UPLIFT	INPUT BRG IN-SX	REQRD BRG IN-SX
C	429	0	429	0	0	5-8	5-8
B	592	0	592	0	0	5-8	5-8

BEVELED PLATE OR SHIM REQUIRED TO PROVIDE FULL BEARING SURFACE WITH TRUSS CHORD AT JT(S): C

UNFACTORED REACTIONS

JT	1ST LCASE COMBINED	MAX./MIN. COMPONENT REACTIONS SNOW	LIVE	PERM.LIVE	WIND	DEAD	SOIL
C	335	218 / 0	60 / 0	0 / 0	0 / 0	57 / 0	0 / 0
B	446	321 / 0	60 / 0	0 / 0	0 / 0	65 / 0	0 / 0

BEARING MATERIAL TO BE SPF NO.2 OR BETTER AT JOINT(S) C, B

BRACING

TOP CHORD TO BE SHEATHED OR MAX. PURLIN SPACING = 6.25 FT.
MAX. UNBRACED BOTTOM CHORD LENGTH = 10.00 FT. OR RIGID CEILING DIRECTLY APPLIED.

ALL PITCH BREAKS AND PERIMETER CORNER JOINTS MUST BE LATERALLY RESTRAINED.

LOADING

TOTAL LOAD CASES: (4)

CHORDS

MEMB. FR-TO	MAX. FACTORED FORCE (LBS)	FACTORED VERT. LOAD (PLF) FROM	TO	LC1	MAX CSI (LC)	MAX. UNBRAC LENGTH
A- B	0 / 24	-122.2	-122.2	0.15 (1)		10.00
B- F	-59 / 17	-122.2	-122.2	0.11 (3)		6.25
F- C	-2 / 6	-122.2	-122.2	0.51 (1)		10.00
D- C	0 / 140	0.0	0.0	0.02 (2)		10.00
B- E	0 / 0	-28.0	-28.0	0.36 (1)		10.00
E- D	0 / 0	-28.0	-28.0	0.37 (1)		10.00

WEBS

MEMB. FR-TO	MAX. FACTORED FORCE (LBS)	MAX CSI (LC)
E- F	-402 / 164	0.00 (1)

DESIGN CRITERIA

SPECIFIED LOADS:

TOP CH.	LL	=	38.3	PSF
	DL	=	3.0	PSF
BOT CH.	LL	=	10.5	PSF
	DL	=	7.0	PSF
TOTAL LOAD		=	58.7	PSF

SPACING = 24.0 IN. C/C

THIS TRUSS IS DESIGNED FOR RESIDENTIAL OR SMALL BUILDING REQUIREMENTS OF PART 9, NBCC 2010

THIS DESIGN COMPLIES WITH:
- PART 9 OF OBC 2012 , BCBC 2012 , ABC 2014
- CSA 086-09
- TPIC 2011

(55 % OF 54.4 P.S.F. G.S.L. PLUS 8.4 P.S.F. RAIN LOAD) EQUALS 38.3 P.S.F. SPECIFIED ROOF LIVE LOAD

ALLOWABLE DEFL.(LL)= L/360 (0.19")
CALCULATED VERT. DEFL.(LL) = L/ 594 (0.12")
ALLOWABLE DEFL.(TL)= L/360 (0.19")
CALCULATED VERT. DEFL.(TL) = L/ 375 (0.18")

CSI: TC=0.51 (C-F:1) , BC=0.37 (D-E:1) , WB=0.00 (E-F:1) , SSI=0.34 (B-E:1)

DOL LUMBER=1.00 NAIL=1.00 LS BEND=1.10 COMP=1.10 SHEAR=1.10 TENS= 1.10

COMPANION LIVE LOAD FACTOR = 0.50

TRUSS PLATE MANUFACTURER IS NOT RESPONSIBLE FOR QUALITY CONTROL IN THE TRUSS MANUFACTURING PLANT .

NAIL VALUES

PLATE	GRIP(DRY) (PSI) MAX	MIN	SHEAR (PLI) MAX	MIN	SECTION (PLI) MAX	MIN
MT20	618	354	1667	822	2284	1656

PLATE PLACEMENT TOL. = 0.250 inches

PLATE ROTATION TOL. = 5.0 Deg.

JSI GRIP= 0.35 (B) (INPUT = 0.90)
JSI METAL= 0.11 (B) (INPUT = 1.00)

LICENSED PROFESSIONAL ENGINEER
9-7-17
S. KATSOULAKOS
PROVINCE OF ONTARIO

DWG NO. TAM45199-17
STRUCTURAL
COMPONENT ONLY

JOB NAME	TRUSS NAME	QUANTITY	PLY	JOB DESC. 42067	DRWG NO.
272253	G6	1	1	TRUSS DESC.	

Tamarack Roof Truss, Burlington

Version 8.030 S Oct 5 2016 MiTek Industries, Inc. Thu Sep 07 11:43:42 2017 Page 1
ID:MHHDd_N1uoGt45wZwpBYkOym0Oi-Mvq1K38VMM6RXUgA0gUe9RiVp3YBaIAAtri09Hyg2LF

Scale = 1:36.5

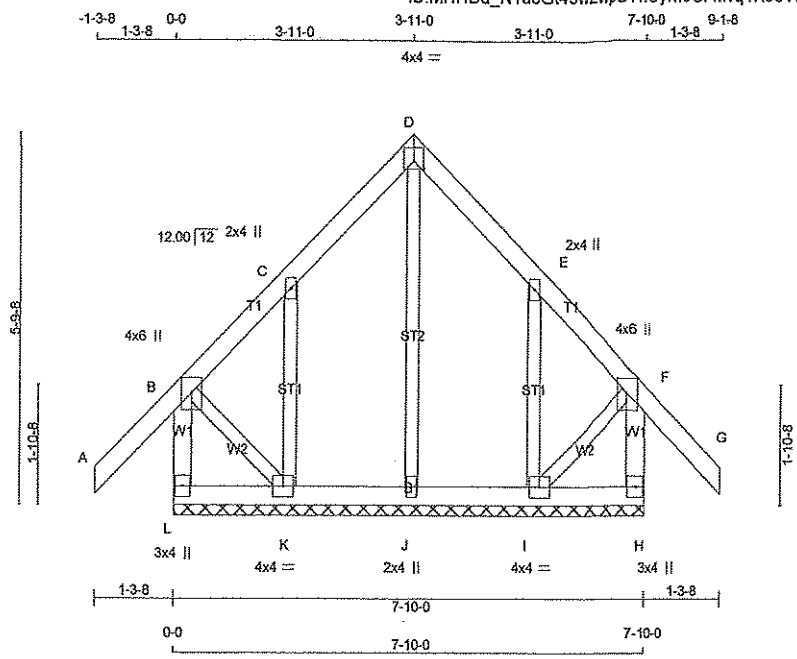

TOTAL WEIGHT = 43 lb

[M]

LUMBER

N. L. G. A. RULES

CHORDS	SIZE		LUMBER	DESCR.
L - B	2x4	DRY	No.2	SPF
A - D	2x4	DRY	No.2	SPF
D - G	2x4	DRY	No.2	SPF
H - F	2x4	DRY	No.2	SPF
L - H	2x4	DRY	No.2	SPF
ALL WEBS	2x3	DRY	No.2	SPF
ALL GABLE WEBS	2x3	DRY	No.2	SPF

DRY: SEASONED LUMBER.

GABLE STUDS SPACED AT 2-0-0 OC.

PLATES (table is in inches)

JT	TYPE	PLATES	W	LEN	Y	X
B	TMVW+p	MT20	4.0	6.0	2.75	2.00
C	TMW+w	MT20	2.0	4.0		
D	TTW-p	MT20	4.0	4.0	1.50	2.00
E	TMW+w	MT20	2.0	4.0		
F	TMVW+p	MT20	4.0	6.0	2.75	2.00
H	BMV1+p	MT20	3.0	4.0		
I	BMWW1-t	MT20	4.0	4.0		
J	BMW1+w	MT20	2.0	4.0		
K	BMWW1-t	MT20	4.0	4.0		
L	BMV1+p	MT20	3.0	4.0		

DIMENSIONS, SUPPORTS AND LOADINGS SPECIFIED BY FABRICATOR TO BE VERIFIED BY BUILDING DESIGNER

BEARINGS

THIS TRUSS DESIGNED FOR CONTINUOUS BEARINGS.

THIS TRUSS REQUIRES RIGID SHEATHING ON EXPOSED FACE.

BEARING MATERIAL TO BE SPF NO.2 OR BETTER AT JOINT(S)

BRACING

TOP CHORD TO BE SHEATHED OR MAX. PURLIN SPACING = 6.25 FT.
MAX. UNBRACED BOTTOM CHORD LENGTH = 10.00 FT. OR RIGID CEILING DIRECTLY APPLIED.

ALL PITCH BREAKS AND PERIMETER CORNER JOINTS MUST BE LATERALLY RESTRAINED.

LOADING

TOTAL LOAD CASES: (4)

CHORDS

MEMB. FR-TO	MAX. FACTORED FORCE (LBS)	FACTORED VERT. LOAD (PLF) FROM	TO	LC1 MAX CSI (LC)	MAX. UNBRAC LENGTH
L- B	-366 / 0	0.0	0.0	0.04 (1)	7.81
A- B	0 / 60	-122.2	-122.2	0.17 (1)	10.00
B- C	-63 / 0	-122.2	-122.2	0.16 (1)	6.25
C- D	-31 / 0	-122.2	-122.2	0.07 (1)	6.25
D- E	-31 / 0	-122.2	-122.2	0.07 (1)	6.25
E- F	-63 / 0	-122.2	-122.2	0.16 (1)	6.25
F- G	0 / 60	-122.2	-122.2	0.17 (1)	10.00
H- F	-356 / 0	0.0	0.0	0.04 (1)	7.81
L- K	0 / 0	-28.0	-28.0	0.03 (3)	10.00
K- J	0 / 14	-28.0	-28.0	0.03 (2)	10.00
J- I	0 / 14	-28.0	-28.0	0.03 (2)	10.00
I- H	0 / 0	-28.0	-28.0	0.03 (3)	10.00

WEBS

MEMB. FR-TO	MAX. FACTORED FORCE (LBS)	MAX CSI (LC)
J- D	-197 / 0	0.10 (1)
K- C	-201 / 0	0.05 (1)
I- E	-201 / 0	0.05 (1)
B- K	0 / 26	0.01 (1)
I- F	0 / 26	0.01 (1)

DESIGN CRITERIA

SPECIFIED LOADS:

TOP CH.	LL	=	38.3	PSF
	DL	=	3.0	PSF
BOT CH.	LL	=	10.5	PSF
	DL	=	7.0	PSF
TOTAL LOAD		=	58.7	PSF

SPACING = 24.0 IN. C/C

THIS TRUSS IS DESIGNED FOR RESIDENTIAL OR SMALL BUILDING REQUIREMENTS OF PART 9, NBCC 2010

THIS DESIGN COMPLIES WITH:
- PART 9 OF OBC 2012 , BCBC 2012 , ABC 2014
- CSA 086-09
- TPIC 2011

DESIGN ASSUMPTIONS
-OVERHANG NOT TO BE ALTERED OR CUT OFF.

(55 % OF 54.4 P.S.F. G.S.L. PLUS 8.4 P.S.F. RAIN LOAD) EQUALS 38.3 P.S.F. SPECIFIED ROOF LIVE LOAD

CSI: TC=0.17 (F-G:1) , BC=0.03 (J-K:2) , WB=0.10 (D-J:1) , SSI=0.09 (F-G:1)

DOL LUMBER=1.00 NAIL=1.00 LS BEND=1.10 COMP=1.10 SHEAR=1.10 TENS= 1.10

COMPANION LIVE LOAD FACTOR = 0.50

TRUSS PLATE MANUFACTURER IS NOT RESPONSIBLE FOR QUALITY CONTROL IN THE TRUSS MANUFACTURING PLANT .

NAIL VALUES

PLATE	GRIP(DRY) (PSI) MAX	MIN	SHEAR (PLI) MAX	MIN	SECTION (PLI) MAX	MIN
MT20	618	354	1667	822	2284	1656

PLATE PLACEMENT TOL. = 0.250 inches

PLATE ROTATION TOL. = 5.0 Deg.

JSI GRIP= 0.39 (D) (INPUT = 0.90)
JSI METAL= 0.06 (E) (INPUT = 1.00)

LICENSED PROFESSIONAL ENGINEER
9217
S. KATSOULAKOS
PROVINCE OF ONTARIO

DWG NO. TAM45203 17
STRUCTURAL
COMPONENT ONLY

JOB NAME	TRUSS NAME	QUANTITY	PLY	JOB DESC. 42067	DRWG NO.
272253	T7	3	1	TRUSS DESC.	

Tamarack Roof Truss, Burlington

Version 8.030 S Oct 5 2016 MiTek Industries, Inc. Thu Sep 07 11:43:43 2017 Page 1

ID:MHHDd_N1uoGt45wZwpBYkOym0Oi-r5NPYP877fEi9dFMaO?lifIfsToQJeVK6USahjyg2LE

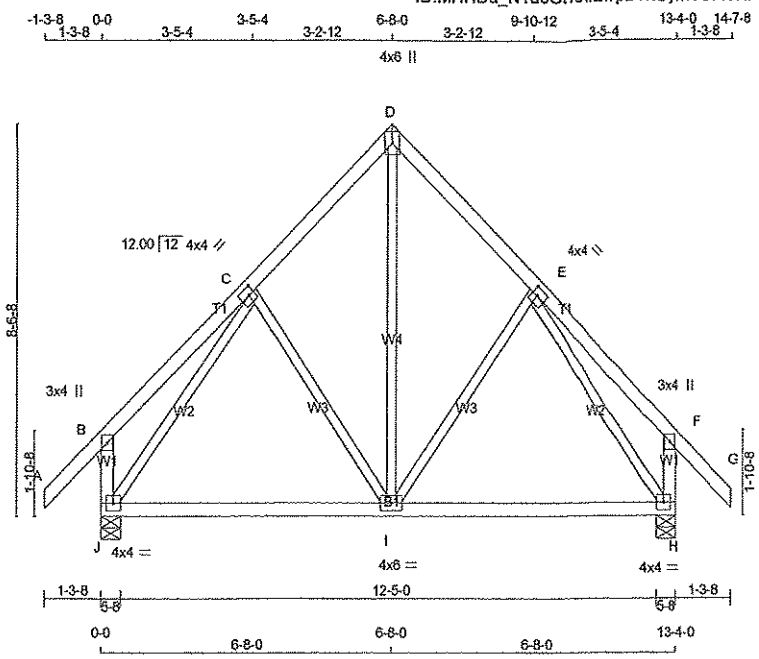

TOTAL WEIGHT = 3 X 69 = 208 lb

[M][F]

LUMBER

N. L. G. A. RULES

CHORDS	SIZE		LUMBER	DESCR.
A - D	2x4	DRY	No.2	SPF
D - G	2x4	DRY	No.2	SPF
J - B	2x4	DRY	No.2	SPF
H - F	2x4	DRY	No.2	SPF
J - H	2x4	DRY	No.2	SPF
ALL WEBS EXCEPT	2x3	DRY	No.2	SPF

DRY: SEASONED LUMBER.

PLATES (table is in inches)

JT	TYPE	PLATES	W	LEN	Y	X
B	TMV+p	MT20	3.0	4.0		
C	TMWW-t	MT20	4.0	4.0	2.00	1.50
D	TTW+p	MT20	4.0	6.0		
E	TMWW-t	MT20	4.0	4.0	2.00	1.50
F	TMV+p	MT20	3.0	4.0		
H	BMVW1-t	MT20	4.0	4.0		
I	BMWWW-t	MT20	4.0	6.0		
J	BMVW1-t	MT20	4.0	4.0		

DIMENSIONS, SUPPORTS AND LOADINGS SPECIFIED BY FABRICATOR TO BE VERIFIED BY BUILDING DESIGNER

BEARINGS

JT	FACTORED GROSS REACTION VERT	HORZ	MAXIMUM FACTORED GROSS REACTION DOWN	HORZ	UPLIFT	INPUT BRG IN-SX	REQRD BRG IN-SX
J	1172	0	1172	0	0	5-8	5-8
H	1172	0	1172	0	0	5-8	5-8

UNFACTORED REACTIONS

JT	1ST LCASE COMBINED	MAX./MIN. COMPONENT REACTIONS SNOW	LIVE	PERM.LIVE	WIND	DEAD	SOIL
J	898	616 / 0	140 / 0	0 / 0	0 / 0	142 / 0	0 / 0
H	898	616 / 0	140 / 0	0 / 0	0 / 0	142 / 0	0 / 0

BEARING MATERIAL TO BE SPF NO.2 OR BETTER AT JOINT(S) J, H

BRACING

TOP CHORD TO BE SHEATHED OR MAX. PURLIN SPACING = 6.25 FT.
MAX. UNBRACED BOTTOM CHORD LENGTH = 10.00 FT. OR RIGID CEILING DIRECTLY APPLIED.

ALL PITCH BREAKS AND PERIMETER CORNER JOINTS MUST BE LATERALLY RESTRAINED.

LOADING

TOTAL LOAD CASES: (4)

CHORDS

MEMB. FR-TO	MAX. FACTORED FORCE (LBS)	FACTORED VERT. LOAD LC1 (PLF) FROM	TO	MAX CSI (LC)	MAX. UNBRAC LENGTH
A- B	0 / 60	-122.2	-122.2	0.17 (1)	10.00
B- C	0 / 33	-122.2	-122.2	0.22 (1)	10.00
C- D	-634 / 0	-122.2	-122.2	0.17 (1)	6.25
D- E	-634 / 0	-122.2	-122.2	0.17 (1)	6.25
E- F	0 / 33	-122.2	-122.2	0.22 (1)	10.00
F- G	0 / 60	-122.2	-122.2	0.17 (1)	10.00
J- B	-324 / 0	0.0	0.0	0.04 (1)	7.81
H- F	-324 / 0	0.0	0.0	0.04 (1)	7.81
J- I	0 / 531	-28.0	-28.0	0.41 (2)	10.00
I- H	0 / 531	-28.0	-28.0	0.41 (2)	10.00

WEBS

MEMB. FR-TO	MAX. FACTORED FORCE (LBS)	MAX CSI (LC)
I- D	0 / 530	0.12 (1)
I- E	-183 / 35	0.11 (1)
C- I	-183 / 35	0.11 (1)
J- C	-940 / 0	0.54 (1)
E- H	-940 / 0	0.54 (1)

DESIGN CRITERIA

SPECIFIED LOADS:

TOP CH.	LL	=	38.3	PSF
	DL	=	3.0	PSF
BOT CH.	LL	=	10.5	PSF
	DL	=	7.0	PSF
TOTAL LOAD		=	58.7	PSF

SPACING = 24.0 IN. C/C

THIS TRUSS IS DESIGNED FOR RESIDENTIAL OR SMALL BUILDING REQUIREMENTS OF PART 9, NBCC 2010

THIS DESIGN COMPLIES WITH:
- PART 9 OF OBC 2012 , BCBC 2012 , ABC 2014
- CSA 086-09
- TPIC 2011

(55 % OF 54.4 P.S.F. G.S.L. PLUS 8.4 P.S.F. RAIN LOAD) EQUALS 38.3 P.S.F. SPECIFIED ROOF LIVE LOAD

ALLOWABLE DEFL.(LL)= L/360 (0.44")
CALCULATED VERT. DEFL.(LL) = L/ 999 (0.06")
ALLOWABLE DEFL.(TL)= L/360 (0.44")
CALCULATED VERT. DEFL.(TL) = L/ 999 (0.10")

CSI: TC=0.22 (B-C:1) , BC=0.41 (I-J:2) , WB=0.54 (C-J:1) , SSI=0.16 (I-J:3)

DOL LUMBER=1.00 NAIL=1.00 LS BEND=1.10 COMP=1.10 SHEAR=1.10 TENS= 1.10

COMPANION LIVE LOAD FACTOR = 0.50

TRUSS PLATE MANUFACTURER IS NOT RESPONSIBLE FOR QUALITY CONTROL IN THE TRUSS MANUFACTURING PLANT .

NAIL VALUES

PLATE	GRIP(DRY) (PSI) MAX	MIN	SHEAR (PLI) MAX	MIN	SECTION (PLI) MAX	MIN
MT20	618	354	1667	822	2284	1656

PLATE PLACEMENT TOL. = 0.250 inches

PLATE ROTATION TOL. = 5.0 Deg.

JSI GRIP= 0.88 (C) (INPUT = 0.90)
JSI METAL= 0.36 (E) (INPUT = 1.00)

LICENSED PROFESSIONAL ENGINEER
9777
S. KATSOULAKOS
PROVINCE OF ONTARIO

DWG NO. TAM 45204-17
STRUCTURAL
COMPONENT ONLY

JOB NAME	TRUSS NAME	QUANTITY	PLY	JOB DESC. 42067	DRWG NO.
272253	G7	1	1	TRUSS DESC.	

Tamarack Roof Truss, Burlington

Version 8.030 S Oct 5 2016 MiTek Industries, Inc. Thu Sep 07 11:43:43 2017 Page 1
ID:MHHDd_N1uoGt5wZwpBYkOym0Oi-r5NPYP877fEI9dFMaO?tflgZTu7Jk9K6USahjyg2LE

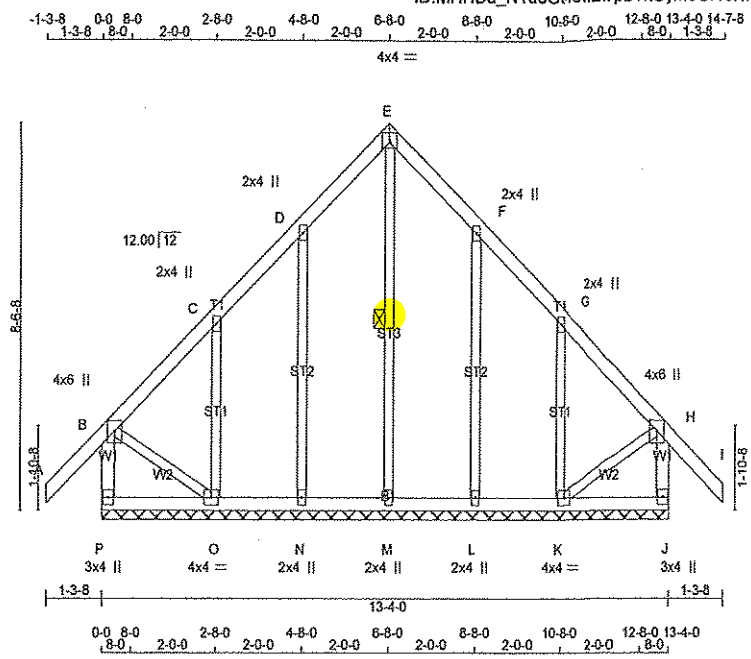

TOTAL WEIGHT = 72 lb
[M]

LUMBER
N. L. G. A. RULES

CHORDS	SIZE		LUMBER	DESCR.
A - E	2x4	DRY	No.2	SPF
E - I	2x4	DRY	No.2	SPF
P - B	2x4	DRY	No.2	SPF
J - H	2x4	DRY	No.2	SPF
P - J	2x4	DRY	No.2	SPF
ALL WEBS	2x3	DRY	No.2	SPF
ALL GABLE WEBS	2x3	DRY	No.2	SPF

DRY: SEASONED LUMBER.

GABLE STUDS SPACED AT 2-0-0 OC.

PLATES (table is in inches)

JT	TYPE	PLATES	W	LEN	Y	X
B	TMVW+p	MT20	4.0	6.0	2.75	2.00
C, D, F, G						
C	TMW+w	MT20	2.0	4.0		
E	TTW-p	MT20	4.0	4.0	1.50	2.00
H	TMVW+p	MT20	4.0	6.0	2.75	2.00
J	BMV1+p	MT20	3.0	4.0		
K	BMWW1-t	MT20	4.0	4.0		
L, M, N						
L	BMW1+w	MT20	2.0	4.0		
O	BMWW1-t	MT20	4.0	4.0		
P	BMV1+p	MT20	3.0	4.0		

DIMENSIONS, SUPPORTS AND LOADINGS SPECIFIED BY FABRICATOR TO BE VERIFIED BY BUILDING DESIGNER

BEARINGS

THIS TRUSS DESIGNED FOR CONTINUOUS BEARINGS.

THIS TRUSS REQUIRES RIGID SHEATHING ON EXPOSED FACE.

BEARING MATERIAL TO BE SPF NO.2 OR BETTER AT JOINT(S)

BRACING
TOP CHORD TO BE SHEATHED OR MAX. PURLIN SPACING = 6.25 FT.
MAX. UNBRACED BOTTOM CHORD LENGTH = 10.00 FT. OR RIGID CEILING DIRECTLY APPLIED.

ALL PITCH BREAKS AND PERIMETER CORNER JOINTS MUST BE LATERALLY RESTRAINED.

1 LATERAL BRACE(S) AT 1/2 LENGTH OF E-M.

END VERTICAL(S) MUST BE SHEATHED OR HAVE BRACES AS INDICATED IN THE MAX. UNBRACED LENGTH COLUMN OF THE TABLE BELOW

LOADING
TOTAL LOAD CASES: (4)

CHORDS

MEMB. FR-TO	MAX. FACTORED FORCE (LBS)	FACTORED VERT. LOAD LC1 (PLF) FROM	TO	MAX CSI (LC)	MAX. UNBRAC LENGTH
A- B	0 / 60	-122.2	-122.2	0.17 (1)	10.00
B- C	-36 / 0	-122.2	-122.2	0.10 (1)	6.25
C- D	-54 / 0	-122.2	-122.2	0.10 (1)	6.25
D- E	-54 / 0	-122.2	-122.2	0.06 (1)	6.25
E- F	-54 / 0	-122.2	-122.2	0.06 (1)	6.25
F- G	-54 / 0	-122.2	-122.2	0.10 (1)	6.25
G- H	-36 / 0	-122.2	-122.2	0.10 (1)	6.25
H- I	0 / 60	-122.2	-122.2	0.17 (1)	10.00
P- B	-361 / 0	0.0	0.0	0.04 (1)	7.81
J- H	-361 / 0	0.0	0.0	0.04 (1)	7.81
P- O	0 / 0	-28.0	-28.0	0.04 (2)	10.00
O- N	0 / 31	-28.0	-28.0	0.05 (2)	10.00
N- M	0 / 27	-28.0	-28.0	0.03 (2)	10.00
M- L	0 / 27	-28.0	-28.0	0.03 (2)	10.00
L- K	0 / 31	-28.0	-28.0	0.05 (2)	10.00
K- J	0 / 0	-28.0	-28.0	0.04 (2)	10.00

WEBS

MEMB. FR-TO	MAX. FACTORED FORCE (LBS)	MAX CSI (LC)
M- E	-159 / 0	0.07 (1)
N- D	-255 / 0	0.18 (1)
O- C	-313 / 0	0.09 (1)
L- F	-255 / 0	0.18 (1)
K- G	-313 / 0	0.09 (1)
B- O	0 / 45	0.01 (1)
K- H	0 / 45	0.01 (1)

DESIGN CRITERIA

SPECIFIED LOADS:

TOP CH.	LL	=	38.3	PSF
	DL	=	3.0	PSF
BOT CH.	LL	=	10.5	PSF
	DL	=	7.0	PSF
TOTAL LOAD		=	58.7	PSF

SPACING = 24.0 IN. C/C

THIS TRUSS IS DESIGNED FOR RESIDENTIAL OR SMALL BUILDING REQUIREMENTS OF PART 9, NBCC 2010

THIS DESIGN COMPLIES WITH:
- PART 9 OF OBC 2012 , BCBC 2012 , ABC 2014
- CSA 086-09
- TPIC 2011

(55 % OF 54.4 P.S.F. G.S.L. PLUS 8.4 P.S.F. RAIN LOAD) EQUALS 38.3 P.S.F. SPECIFIED ROOF LIVE LOAD

CSI: TC=0.17 (H-I:1) , BC=0.05 (N-O:2) , WB=0.18 (F-L:1) , SSI=0.10 (B-C:1)

DOL LUMBER=1.00 NAIL=1.00 LS BEND=1.10 COMP=1.10 SHEAR=1.10 TENS= 1.10

COMPANION LIVE LOAD FACTOR = 0.50

TRUSS PLATE MANUFACTURER IS NOT RESPONSIBLE FOR QUALITY CONTROL IN THE TRUSS MANUFACTURING PLANT .

NAIL VALUES

PLATE	GRIP(DRY) (PSI) MAX	MIN	SHEAR (PLI) MAX	MIN	SECTION (PLI) MAX	MIN
MT20	618	354	1667	822	2284	1656

PLATE PLACEMENT TOL. = 0.250 inches

PLATE ROTATION TOL. = 5.0 Deg.

JSI GRIP= 0.32 (E) (INPUT = 0.90)
JSI METAL= 0.09 (G) (INPUT = 1.00)

LICENSED PROFESSIONAL ENGINEER
9727
S. KATSOULAKOS
PROVINCE OF ONTARIO

DWG NO. TAM 45205-17
STRUCTURAL
COMPONENT ONLY

JOB NAME	TRUSS NAME	QUANTITY	PLY	JOB DESC. 42067	DRWG NO.
272253	T8	1	3	TRUSS DESC.	

Tamarack Roof Truss, Burlington

Version 8.030 S Oct 5 2016 MiTek Industries, Inc. Thu Sep 07 11:43:43 2017 Page 1
ID:MHHDd_N1uoGt45wZwpBYkOym0Oi-r5NPYP877fEI9dFMaO?tiflfvTmLJcKK6USahjyg2LE

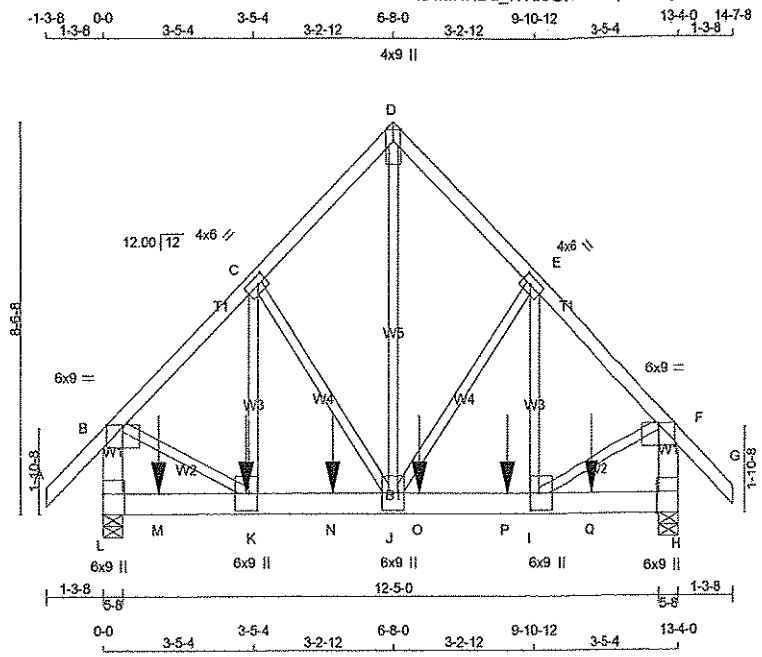

TOTAL WEIGHT = 3 X 83 = 250 lb

[M]

LUMBER
N. L. G. A. RULES

CHORDS	SIZE		LUMBER	DESCR.
A - D	2x4	DRY	No.2	SPF
D - G	2x4	DRY	No.2	SPF
L - B	2x6	DRY	No.2	SPF
H - F	2x6	DRY	No.2	SPF
L - H	2x6	DRY	No.2	SPF
ALL WEBS EXCEPT	2x3	DRY	No.2	SPF

DRY: SEASONED LUMBER.

DESIGN CONSISTS OF 3 TRUSSES BUILT SEPARATELY THEN FASTENED TOGETHER AS FOLLOWS:

CHORDS	#ROWS	SURFACE SPACING (IN)	LOAD(PLF)
TOP CHORDS : (0.122"X3") SPIRAL NAILS			
A- D	1	12	TOP
D- G	1	12	TOP
L- B	2	12	TOP
H- F	2	12	TOP
BOTTOM CHORDS : (0.122"X3") SPIRAL NAILS			
L- H	2	5	SIDE(1124.1)
WEBS : (0.122"X3") SPIRAL NAILS			
2x3	1	6	

STAGGER NAILS BY HALF THE SURFACE SPACING IN ADJACENT PLIES.

GIRDER NAILING ASSUMES NAILED HANGERS ARE FASTENED WITH MIN. 3-0 INCH NAILS.

TOP - COMPONENTS ARE LOADED FROM THE TOP AND MUST BE PLACED ON TOP EDGE OF ALL PLIES FOR THE LOAD TO BE TRANSFERRED TO EACH PLY.

SIDE - PLF SHOWN IS THE EQUIVALENT UDL APPLIED TO ONE SIDE THAT THE CORRESPONDING NAILING PATTERN SHALL BE CAPABLE OF TRANSFERING. REMAINING PLF MUST BE APPLIED ON THE OPPOSITE SIDE OR ON THE TOP.

PLATES (table is in inches)

JT	TYPE	PLATES	W	LEN	Y	X
B	TMWW-p	MT20	6.0	9.0	Edge	
C	TMWW-t	MT20	4.0	6.0	2.00	2.50
D	TTW+p	MT20	4.0	9.0	Edge	
E	TMWW-t	MT20	4.0	6.0	2.00	2.50
F	TMWW-p	MT20	6.0	9.0	Edge	
H	BMV1+t	MT20	6.0	9.0	Edge	0.50
I	BMWW+t	MT20	6.0	9.0	4.50	2.25
J	BMWWW+t	MT20	6.0	9.0		
K	BMWW+t	MT20	6.0	9.0	4.50	2.25
L	BMV1+t	MT20	6.0	9.0	5.50	

Edge - INDICATES REFERENCE CORNER OF PLATE TOUCHES EDGE OF CHORD.

HANGERS NOTES
1)

DIMENSIONS, SUPPORTS AND LOADINGS SPECIFIED BY FABRICATOR TO BE VERIFIED BY BUILDING DESIGNER

BEARINGS

JT	FACTORED GROSS REACTION VERT	HORZ	MAXIMUM FACTORED GROSS REACTION DOWN	HORZ	UPLIFT	INPUT BRG IN-SX	REQRD BRG IN-SX
L	10722	0	10722	0	0	5-8	5-8
H	9723	0	9723	0	0	5-8	5-8

UNFACTORED REACTIONS

JT	1ST LCASE COMBINED	MAX./MIN. COMPONENT REACTIONS SNOW	LIVE	PERM.LIVE	WIND	DEAD	SOIL
L	8269	5585 / 0	1348 / 0	0 / 0	0 / 0	1337 / 0	0 / 0
H	7498	5085 / 0	1221 / 0	0 / 0	0 / 0	1212 / 0	0 / 0

BEARING MATERIAL TO BE SPF NO.2 OR BETTER AT JOINT(S) L, H

BRACING
TOP CHORD TO BE SHEATHED OR MAX. PURLIN SPACING = 3.99 FT.
MAX. UNBRACED BOTTOM CHORD LENGTH = 10.00 FT. OR RIGID CEILING DIRECTLY APPLIED.

ALL PITCH BREAKS AND PERIMETER CORNER JOINTS MUST BE LATERALLY RESTRAINED.

LOADING
TOTAL LOAD CASES: (4)

CHORDS

MEMB. FR-TO	MAX. FACTORED FORCE (LBS)	FACTORED VERT. LOAD (PLF) FROM	TO	LC1	MAX CSI (LC)	MAX. UNBRAC LENGTH
A- B	0 / 60	-122.2	-122.2	0.06 (1)	10.00	
B- C	-8616 / 0	-122.2	-122.2	0.20 (1)	3.99	
C- D	-6663 / 0	-122.2	-122.2	0.13 (1)	4.49	
D- E	-6663 / 0	-122.2	-122.2	0.13 (1)	4.49	
E- F	-8447 / 0	-122.2	-122.2	0.19 (1)	4.03	
F- G	0 / 60	-122.2	-122.2	0.06 (1)	10.00	
L- B	-9021 / 0	0.0	0.0	0.21 (1)	6.07	
H- F	-8851 / 0	0.0	0.0	0.21 (1)	6.12	
L- M	0 / 0	-28.0	-28.0	0.48 (1)	10.00	
M- K	0 / 0	-28.0	-28.0	0.48 (1)	10.00	
K- N	0 / 6098	-28.0	-28.0	0.54 (1)	10.00	
N- J	0 / 6098	-28.0	-28.0	0.54 (1)	10.00	
J- O	0 / 5979	-28.0	-28.0	0.54 (1)	10.00	
O- P	0 / 5979	-28.0	-28.0	0.54 (1)	10.00	
P- I	0 / 5979	-28.0	-28.0	0.54 (1)	10.00	
I- Q	0 / 0	-28.0	-28.0	0.39 (1)	10.00	
Q- H	0 / 0	-28.0	-28.0	0.39 (1)	10.00	

WEBS

MEMB. FR-TO	MAX. FACTORED FORCE (LBS)	MAX CSI (LC)
J- D	0 / 9041	0.68 (1)
J- E	-2307 / 0	0.44 (1)
I- E	0 / 2765	0.21 (1)
C- J	-2523 / 0	0.48 (1)
K- C	0 / 3066	0.23 (1)
B- K	0 / 6611	0.50 (1)
I- F	0 / 6482	0.49 (1)

FACTORED CONCENTRATED LOADS (LBS)

JT	LOC.	LC1	MAX-	MAX+	FACE	DIR.	TYPE
K	3-3-4	-3017	-3017	---	FRONT	VERT	TOTAL
M	1-3-4	-3017	-3017	---	FRONT	VERT	TOTAL
N	5-3-4	-3017	-3017	---	FRONT	VERT	TOTAL
O	7-3-4	-3017	-3017	---	FRONT	VERT	TOTAL
P	9-3-4	-3017	-3017	---	FRONT	VERT	TOTAL
Q	11-3-4	-3017	-3017	---	FRONT	VERT	TOTAL

DESIGN CRITERIA

SPECIFIED LOADS:

TOP CH.	LL	=	38.3	PSF
	DL	=	3.0	PSF
BOT CH.	LL	=	10.5	PSF
	DL	=	7.0	PSF
TOTAL LOAD		=	58.7	PSF

SPACING = 24.0 IN. C/C

THIS TRUSS IS DESIGNED FOR RESIDENTIAL OR SMALL BUILDING REQUIREMENTS OF PART 9, NBCC 2010

THIS DESIGN COMPLIES WITH:
- PART 9 OF OBC 2012 , BCBC 2012 , ABC 2014
- CSA 086-09
- TPIC 2011

(55 % OF 54.4 P.S.F. G.S.L. PLUS 8.4 P.S.F. RAIN LOAD) EQUALS 38.3 P.S.F. SPECIFIED ROOF LIVE LOAD

ALLOWABLE DEFL.(LL)= L/360 (0.44")
CALCULATED VERT. DEFL.(LL) = L/ 999 (0.07")
ALLOWABLE DEFL.(TL)= L/360 (0.44")
CALCULATED VERT. DEFL.(TL) = L/ 999 (0.10")

CSI: TC=0.21 (B-L:1) , BC=0.54 (J-K:1) , WB=0.68 (D-J:1) , SSI=0.62 (I-J:1)

DOL LUMBER=1.00 NAIL=1.00 LS BEND=1.10 COMP=1.10 SHEAR=1.10 TENS= 1.10

COMPANION LIVE LOAD FACTOR = 0.50

AUTOSOLVE HEELS OFF

TRUSS PLATE MANUFACTURER IS NOT RESPONSIBLE FOR QUALITY CONTROL IN THE TRUSS MANUFACTURING PLANT .

NAIL VALUES

PLATE	GRIP(DRY) (PSI) MAX	MIN	SHEAR (PLI) MAX	MIN	SECTION (PLI) MAX	MIN
MT20	618	354	1667	822	2284	1656

PLATE PLACEMENT TOL. = 0.250 inches

PLATE ROTATION TOL. = 5.0 Deg.

JSI GRIP= 0.83 (I) (INPUT = 0.90)
JSI METAL= 0.49 (B) (INPUT = 1.00)

LICENSED PROFESSIONAL ENGINEER
9727
S. KATSOULAKOS
PROVINCE OF ONTARIO

DWG NO. TAM 45266-17
STRUCTURAL
COMPONENT ONLY

CONTINUED ON PAGE 2

JOB NAME	TRUSS NAME	QUANTITY	PLY	JOB DESC. 42067	DRWG NO.
272253	T8	1	3	TRUSS DESC.	

HANGERS NOTES

1) SPECIAL HANGER(S) OR CONNECTION(S) REQUIRED TO SUPPORT CONCENTRATED LOAD(S) 3016.9 lbs FACTORED DOWN AT 1-3-4, 3016.9 lbs FACTORED DOWN AT 3-3-4, 3016.9 lbs FACTORED DOWN AT 5-3-4, 3016.9 lbs FACTORED DOWN AT 7-3-4, AND 3016.9 lbs FACTORED DOWN AT 9-3-4, AND 3016.9 lbs FACTORED DOWN AT 11-3-4 ON BOTTOM CHORD. DESIGN FOR UNSPECIFIED CONNECTION(S) IS DELEGATED TO THE BUILDING DESIGNER.

LICENSED PROFESSIONAL ENGINEER
9777
S. KATSOULAKOS
PROVINCE OF ONTARIO

DWG NO. TAM4526-17 R6 2/2
STRUCTURAL
COMPONENT ONLY

JOB NAME	TRUSS NAME	QUANTITY	PLY	JOB DESC. 42067	DRWG NO.
266140	T10	1	2	TRUSS DESC.	

Tamarack Roof Truss, Burlington

Version 8.030 S Oct 5 2016 MiTek Industries, Inc. Thu Sep 07 11:41:50 2017 Page 1

ID:T410TgzMB153Sw?eGMLZIxzAeat-eM2hqmnFkx?K5G6eS9TNdq6FbvD2KZ8h7Pa5Emyg2N?

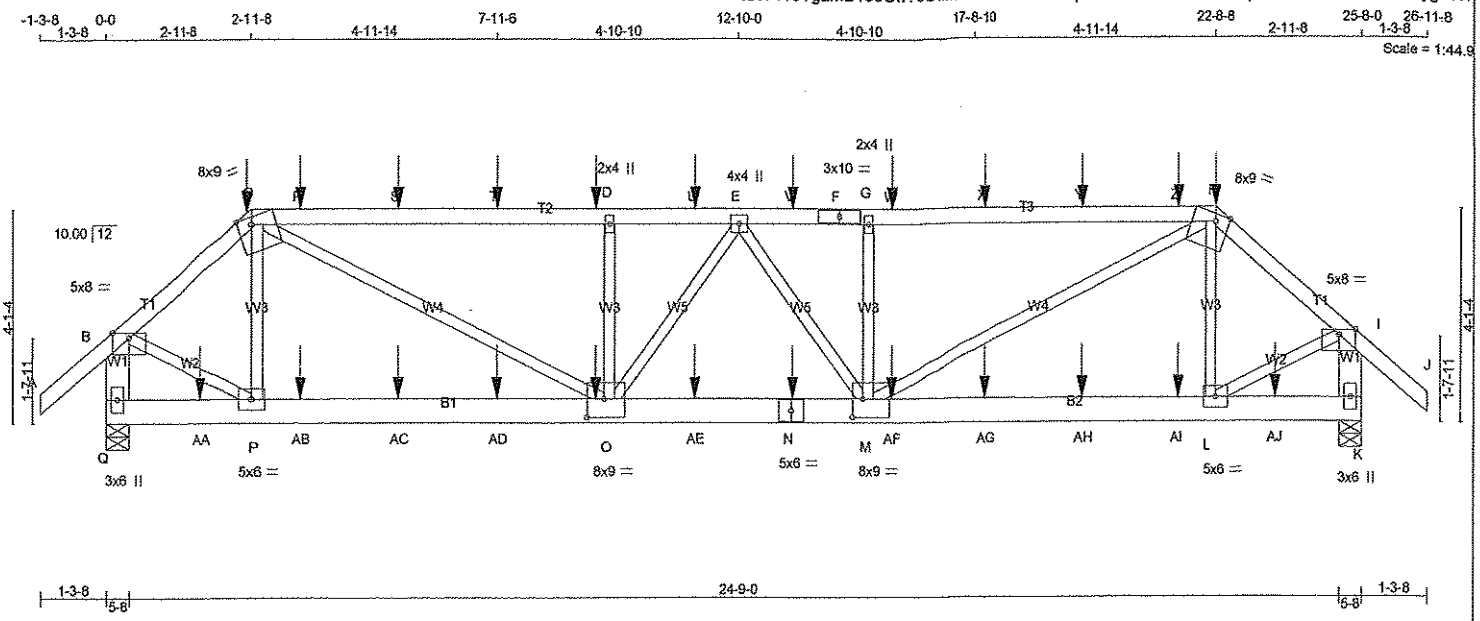

TOTAL WEIGHT = 2 X 121 = 242 lb

[M]

LUMBER

N. L. G. A. RULES

CHORDS	SIZE		LUMBER	DESCR.
A - C	2x4	DRY	2100F 1.8E	SPF
C - F	2x4	DRY	2100F 1.8E	SPF
F - H	2x4	DRY	2100F 1.8E	SPF
H - J	2x4	DRY	2100F 1.8E	SPF
Q - B	2x6	DRY	No.2	SPF
K - I	2x6	DRY	No.2	SPF
Q - N	2x6	DRY	No.2	SPF
N - K	2x6	DRY	No.2	SPF
ALL WEBS EXCEPT	2x3	DRY	No.2	SPF

DRY: SEASONED LUMBER.

DESIGN CONSISTS OF 2 TRUSSES BUILT SEPARATELY THEN FASTENED TOGETHER AS FOLLOWS:

CHORDS	#ROWS	SURFACE SPACING (IN)	LOAD(PLF)
TOP CHORDS : (0.122"X3") SPIRAL NAILS			
A- C	1	12	SIDE(65.9)
C- F	1	12	SIDE(65.9)
F- H	1	12	SIDE(65.9)
H- J	1	12	SIDE(65.9)
Q- B	2	12	TOP
K- I	2	12	TOP
BOTTOM CHORDS : (0.122"X3") SPIRAL NAILS			
Q- N	2	12	SIDE(183.1)
N- K	2	12	SIDE(0.0)
WEBS : (0.122"X3") SPIRAL NAILS			
2x3	1	6	

NAILS TO BE DRIVEN FROM ONE SIDE ONLY.

GIRDER NAILING ASSUMES NAILED HANGERS ARE FASTENED WITH MIN. 3-0 INCH NAILS.

TOP - COMPONENTS ARE LOADED FROM THE TOP AND MUST BE PLACED ON TOP EDGE OF ALL PLIES FOR THE LOAD TO BE TRANSFERRED TO EACH PLY.

SIDE - PLF SHOWN IS THE EQUIVALENT UDL APPLIED TO ONE SIDE THAT THE CORRESPONDING NAILING PATTERN SHALL BE CAPABLE OF TRANSFERING. REMAINING PLF MUST BE APPLIED ON THE OPPOSITE SIDE OR ON THE TOP.

PLATES (table is in inches)

JT	TYPE	PLATES	W	LEN	Y	X
B	TMWW-p	MT20	5.0	8.0	Edge	
C	TTWW-m	MT20	8.0	9.0	Edge	3.25
D	TMW+w	MT20	2.0	4.0		
E	TMWW+t	MT20	4.0	4.0		
F	TS-t	MT20	3.0	10.0		
G	TMW+w	MT20	2.0	4.0		
H	TTWW-m	MT20	8.0	9.0	Edge	3.25
I	TMVW-p	MT20	5.0	8.0	Edge	
K	BMV1+p	MT20	3.0	6.0		
L	BMWW-t	MT20	5.0	6.0		
M	BMWWW-t	MT20	8.0	9.0	4.25	2.50
N	BS-t	MT20	5.0	6.0		
O	BMWWW-t	MT20	8.0	9.0	4.25	4.00
P	BMWW-t	MT20	5.0	6.0		
Q	BMV1+p	MT20	3.0	6.0		

Edge - INDICATES REFERENCE CORNER OF PLATE TOUCHES EDGE OF CHORD.

DIMENSIONS, SUPPORTS AND LOADINGS SPECIFIED BY FABRICATOR TO BE VERIFIED BY BUILDING DESIGNER

BEARINGS

JT	FACTORED GROSS REACTION VERT	HORZ	MAXIMUM FACTORED GROSS REACTION DOWN	HORZ	UPLIFT	INPUT BRG IN-SX	REQRD BRG IN-SX
Q	3237	0	3237	0	0	5-8	5-8
K	3265	0	3265	0	0	5-8	5-8

UNFACTORED REACTIONS

JT	1ST LCASE COMBINED	MAX./MIN. COMPONENT REACTIONS SNOW	LIVE	PERM.LIVE	WIND	DEAD	SOIL
Q	2546	1632 / 0	471 / 0	0 / 0	0 / 0	442 / 0	0 / 0
K	2568	1647 / 0	475 / 0	0 / 0	0 / 0	446 / 0	0 / 0

BEARING MATERIAL TO BE SPF NO.2 OR BETTER AT JOINT(S) Q, K

BRACING

TOP CHORD TO BE SHEATHED OR MAX. PURLIN SPACING = 4.32 FT.
MAX. UNBRACED BOTTOM CHORD LENGTH = 10.00 FT. OR RIGID CEILING DIRECTLY APPLIED.

ALL PITCH BREAKS AND PERIMETER CORNER JOINTS MUST BE LATERALLY RESTRAINED.

LOADING

TOTAL LOAD CASES: (4)

CHORDS

MEMB. FR-TO	MAX. FACTORED FORCE (LBS)	FACTORED VERT. LOAD (PLF) FROM	TO	LC1	MAX CSI (LC)	MAX. UNBRAC LENGTH
A- B	0 / 54	-122.2	-122.2	0.06 (1)	10.00	
B- C	-3070 / 0	-122.2	-122.2	0.08 (1)	6.21	
C- R	-5475 / 0	-122.2	-122.2	0.63 (1)	4.36	
R- S	-5475 / 0	-122.2	-122.2	0.63 (1)	4.36	
S- T	-5475 / 0	-122.2	-122.2	0.63 (1)	4.36	
T- D	-5475 / 0	-122.2	-122.2	0.63 (1)	4.36	
D- U	-5476 / 0	-122.2	-122.2	0.50 (1)	4.36	
U- E	-5476 / 0	-122.2	-122.2	0.50 (1)	4.36	
E- V	-5488 / 0	-122.2	-122.2	0.52 (1)	4.32	
V- F	-5488 / 0	-122.2	-122.2	0.52 (1)	4.32	
F- G	-5488 / 0	-122.2	-122.2	0.52 (1)	4.32	
G- W	-5487 / 0	-122.2	-122.2	0.65 (1)	4.32	
W- X	-5487 / 0	-122.2	-122.2	0.65 (1)	4.32	
X- Y	-5487 / 0	-122.2	-122.2	0.65 (1)	4.32	
Y- Z	-5487 / 0	-122.2	-122.2	0.65 (1)	4.32	
Z- H	-5487 / 0	-122.2	-122.2	0.65 (1)	4.32	
H- I	-3098 / 0	-122.2	-122.2	0.08 (1)	6.19	
I- J	0 / 54	-122.2	-122.2	0.06 (1)	10.00	
Q- B	-3264 / 0	0.0	0.0	0.12 (1)	7.66	
K- I	-3290 / 0	0.0	0.0	0.12 (1)	7.66	
Q-AA	0 / 0	-28.0	-28.0	0.13 (2)	10.00	
AA- P	0 / 0	-28.0	-28.0	0.13 (2)	10.00	
P-AB	0 / 2334	-28.0	-28.0	0.25 (1)	10.00	
AB-AC	0 / 2334	-28.0	-28.0	0.25 (1)	10.00	
AC-AD	0 / 2334	-28.0	-28.0	0.25 (1)	10.00	
AD- O	0 / 2334	-28.0	-28.0	0.25 (1)	10.00	
O-AE	0 / 5333	-28.0	-28.0	0.41 (1)	10.00	
AE- N	0 / 5333	-28.0	-28.0	0.41 (1)	10.00	
N- M	0 / 5333	-28.0	-28.0	0.41 (1)	10.00	
M-AF	0 / 2355	-28.0	-28.0	0.25 (1)	10.00	
AF-AG	0 / 2355	-28.0	-28.0	0.25 (1)	10.00	
AG-AH	0 / 2355	-28.0	-28.0	0.25 (1)	10.00	
AH-AI	0 / 2355	-28.0	-28.0	0.25 (1)	10.00	
AI- L	0 / 2355	-28.0	-28.0	0.25 (1)	10.00	
L-AJ	0 / 0	-28.0	-28.0	0.13 (2)	10.00	
AJ- K	0 / 0	-28.0	-28.0	0.13 (2)	10.00	

WEBS

MEMB. FR-TO	MAX. FACTORED FORCE (LBS)	MAX CSI (LC)
P- C	-576 / 141	0.07 (1)
C- O	0 / 3529	0.44 (1)
O- D	-1548 / 0	0.20 (1)
M- G	-1559 / 0	0.20 (1)
M- H	0 / 3519	0.44 (1)
L- H	-583 / 144	0.07 (1)
B- P	0 / 2539	0.31 (1)
L- I	0 / 2553	0.32 (1)
O- E	0 / 248	0.03 (1)
E- M	0 / 269	0.03 (1)

LICENSED PROFESSIONAL ENGINEER
9-7-22
S. KATSOULAKOS
PROVINCE OF ONTARIO

DWG NO. TAM 45202 17

STRUCTURAL COMPONENT ONLY

DESIGN CRITERIA

*** SPECIAL LOADS ANALYSIS ***
GEOMETRY AND/OR BASIC LOADS CHANGED BY USER.
LOADS WERE DERIVED FROM USER INPUT
NO FURTHER MODIFICATIONS WERE MADE

SPECIFIED LOADS:

TOP CH.	LL	=	38.3	PSF
	DL	=	3.0	PSF
BOT CH.	LL	=	10.5	PSF
	DL	=	7.0	PSF
TOTAL LOAD		=	58.7	PSF

SPACING = 24.0 IN. C/C

LOADING IN FLAT SECTION BASED ON A SLOPE OF 6.00/12

*** NON STANDARD GIRDER ***
ADDT'L USER-DEFINED LOADS APPLIED TO ALL LOAD CASES.

THIS TRUSS IS DESIGNED FOR RESIDENTIAL OR SMALL BUILDING REQUIREMENTS OF PART 9, NBCC 2010

THIS DESIGN COMPLIES WITH:
- PART 9 OF OBC 2012 , BCBC 2012 , ABC 2014
- CSA 086-09
- TPIC 2011

(55 % OF 54.4 P.S.F. G.S.L. PLUS 8.4 P.S.F. RAIN LOAD) EQUALS 38.3 P.S.F. SPECIFIED ROOF LIVE LOAD

ALLOWABLE DEFL.(LL)= L/360 (0.86")
CALCULATED VERT. DEFL.(LL) = L/ 999 (0.13")
ALLOWABLE DEFL.(TL)= L/360 (0.86")
CALCULATED VERT. DEFL.(TL) = L/ 999 (0.20")

CSI: TC=0.65 (G-H:1) , BC=0.41 (M-O:1) , WB=0.44 (C-O:1) , SSI=0.38 (G-H:1)

DOL LUMBER=1.00 NAIL=1.00 LS BEND=1.00 COMP=1.00 SHEAR=1.00 TENS= 1.00

COMPANION LIVE LOAD FACTOR = 0.50

AUTOSOLVE HEELS OFF

TRUSS PLATE MANUFACTURER IS NOT RESPONSIBLE FOR QUALITY CONTROL IN THE TRUSS MANUFACTURING PLANT .

NAIL VALUES

PLATE	GRIP(DRY) (PSI) MAX	MIN	SHEAR (PLI) MAX	MIN	SECTION (PLI) MAX	MIN
MT20	618	354	1667	822	2284	1656

PLATE PLACEMENT TOL. = 0.250 inches

PLATE ROTATION TOL. = 5.0 Deg.

JSI GRIP= 0.70 (F) (INPUT = 0.90)
JSI METAL= 0.46 (N) (INPUT = 1.00)

pg 1 2

CONTINUED ON PAGE 2

HANGERS NOTES

1) SPECIAL HANGER(S) OR CONNECTION(S) REQUIRED TO SUPPORT CONCENTRATED LOAD(S) 171.3 lbs FACTORED DOWN AT 2-11-8, 171.3 lbs FACTORED DOWN AT 22-8-8, 148.2 lbs FACTORED DOWN AT 3-11-4, 147.1 lbs FACTORED DOWN AT 5-11-4, 147.1 lbs FACTORED DOWN AT 7-11-4, 147.1 lbs FACTORED DOWN AT 9-11-4, 147.1 lbs FACTORED DOWN AT 11-11-4, 147.1 lbs FACTORED DOWN AT 13-11-4, 147.1 lbs FACTORED DOWN AT 15-11-4, 147.1 lbs FACTORED DOWN AT 17-11-4, AND 147.1 lbs FACTORED DOWN AT 19-11-4, AND 161.0 lbs FACTORED DOWN AT 21-11-4 ON TOP CHORD, AND 69.9 lbs FACTORED DOWN AT 1-11-4, 69.9 lbs FACTORED DOWN AT 3-11-4, 69.9 lbs FACTORED DOWN AT 5-11-4, 69.9 lbs FACTORED DOWN AT 7-11-4, 69.9 lbs FACTORED DOWN AT 9-11-4, 69.9 lbs FACTORED DOWN AT 11-11-4, 69.9 lbs FACTORED DOWN AT 13-11-4, 69.9 lbs FACTORED DOWN AT 15-11-4, 69.9 lbs FACTORED DOWN AT 17-11-4, 69.9 lbs FACTORED DOWN AT 19-11-4, AND 69.9 lbs FACTORED DOWN AT 21-11-4, AND 69.9 lbs FACTORED DOWN AT 23-11-4 ON BOTTOM CHORD. DESIGN FOR UNSPECIFIED CONNECTION(S) IS DELEGATED TO THE BUILDING DESIGNER.

FACTORED CONCENTRATED LOADS (LBS)

JT	LOC.	LC1	MAX-	MAX+	FACE	DIR.	TYPE
C	2-11-8	-171	-171	---	FRONT	VERT	TOTAL
D	9-11-4	-147	-147	---	FRONT	VERT	TOTAL
H	22-8-8	-171	-171	---	FRONT	VERT	TOTAL
N	13-11-4	-40	-70	---	FRONT	VERT	TOTAL
O	9-11-4	-40	-70	---	FRONT	VERT	TOTAL
R	3-11-4	-148	-148	---	FRONT	VERT	TOTAL
S	5-11-4	-147	-147	---	FRONT	VERT	TOTAL
T	7-11-4	-147	-147	---	FRONT	VERT	TOTAL
U	11-11-4	-147	-147	---	FRONT	VERT	TOTAL
V	13-11-4	-147	-147	---	FRONT	VERT	TOTAL
W	15-11-4	-147	-147	---	FRONT	VERT	TOTAL
X	17-11-4	-147	-147	---	FRONT	VERT	TOTAL
Y	19-11-4	-147	-147	---	FRONT	VERT	TOTAL
Z	21-11-4	-161	-161	---	FRONT	VERT	TOTAL
AA	1-11-4	-40	-70	---	FRONT	VERT	TOTAL
AB	3-11-4	-40	-70	---	FRONT	VERT	TOTAL
AC	5-11-4	-40	-70	---	FRONT	VERT	TOTAL
AD	7-11-4	-40	-70	---	FRONT	VERT	TOTAL
AE	11-11-4	-40	-70	---	FRONT	VERT	TOTAL
AF	15-11-4	-40	-70	---	FRONT	VERT	TOTAL
AG	17-11-4	-40	-70	---	FRONT	VERT	TOTAL
AH	19-11-4	-40	-70	---	FRONT	VERT	TOTAL
AI	21-11-4	-40	-70	---	FRONT	VERT	TOTAL
AJ	23-11-4	-40	-70	---	FRONT	VERT	TOTAL

LICENSED PROFESSIONAL ENGINEER
9717
S. KATSOULAKOS
PROVINCE OF ONTARIO

DWG NO. TAM 45200-17
STRUCTURAL
COMPONENT ONLY

JOB NAME	TRUSS NAME	QUANTITY	PLY	JOB DESC. 42067	DRWG NO.
266140	T10Z	1	2	TRUSS DESC.	

Tamarack Roof Truss, Burlington

Version 8.030 S Oct 5 2016 MiTek Industries, Inc. Thu Sep 07 11:41:51 2017 Page 1

ID:T410TgzMB153Sw?eGMLZlxzAeat-6Yc316otVF7BjQhq0s_c91fNxJXH3yXqM3JfmCyg2N_

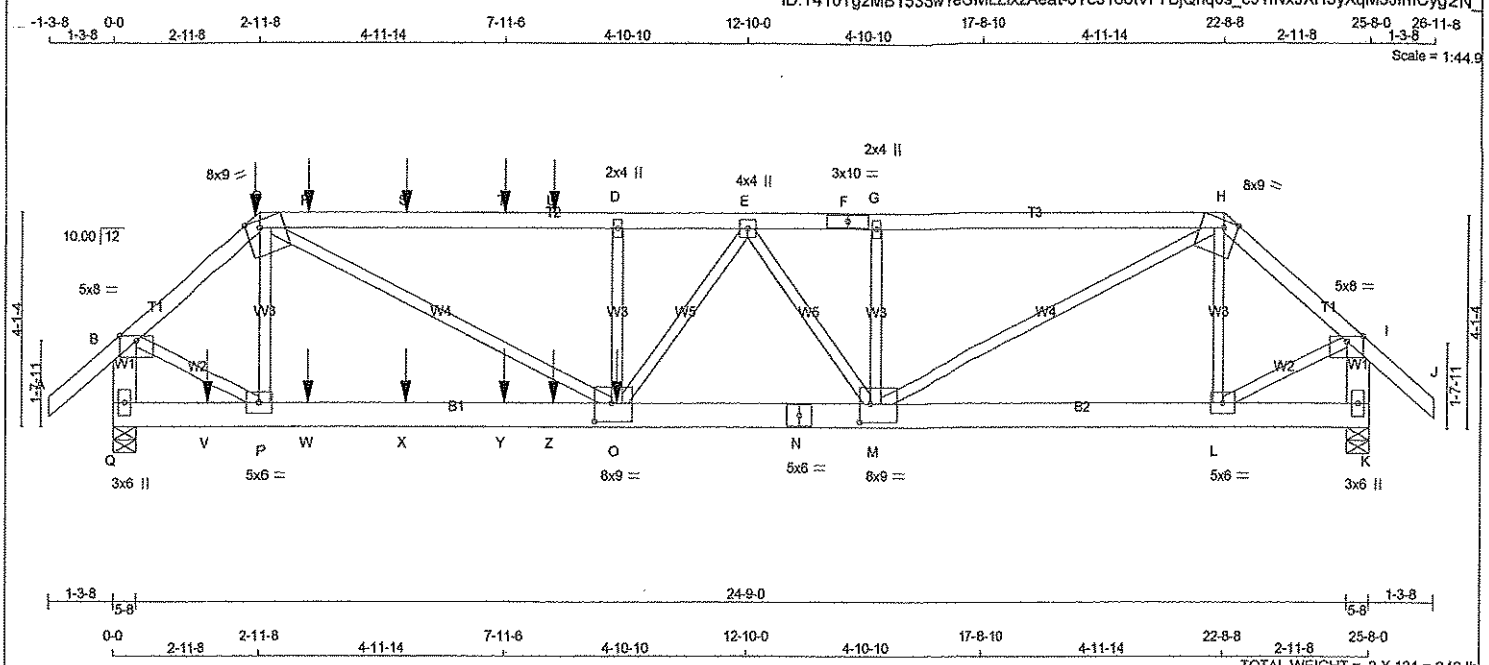

TOTAL WEIGHT = 2 X 121 = 242 lb.

[M]

LUMBER

N. L. G. A. RULES

CHORDS	SIZE		LUMBER	DESCR.
A - C	2x4	DRY	2100F 1.8E	SPF
C - F	2x4	DRY	2100F 1.8E	SPF
F - H	2x4	DRY	2100F 1.8E	SPF
H - J	2x4	DRY	2100F 1.8E	SPF
Q - B	2x6	DRY	No.2	SPF
K - I	2x6	DRY	No.2	SPF
Q - N	2x6	DRY	No.2	SPF
N - K	2x6	DRY	No.2	SPF
ALL WEBS EXCEPT	2x3	DRY	No.2	SPF

DRY: SEASONED LUMBER.

DESIGN CONSISTS OF 2 TRUSSES BUILT SEPARATELY THEN FASTENED TOGETHER AS FOLLOWS:

CHORDS	#ROWS	SURFACE SPACING (IN)	LOAD(PLF)
TOP CHORDS : (0.122"X3") SPIRAL NAILS			
A- C	1	12	SIDE(65.9)
C- F	1	12	SIDE(65.9)
F- H	1	12	TOP
H- J	1	12	TOP
Q- B	2	12	TOP
K- I	2	12	TOP
BOTTOM CHORDS : (0.122"X3") SPIRAL NAILS			
Q- N	2	12	SIDE(183.1)
N- K	2	12	TOP
WEBS : (0.122"X3") SPIRAL NAILS			
2x3	1	6	
D- O	1	4	SIDE(411.6)
G- M	1	4	

NAILS TO BE DRIVEN FROM ONE SIDE ONLY.

GIRDER NAILING ASSUMES NAILED HANGERS ARE FASTENED WITH MIN. 3-0 INCH NAILS.

TOP - COMPONENTS ARE LOADED FROM THE TOP AND MUST BE PLACED ON TOP EDGE OF ALL PLIES FOR THE LOAD TO BE TRANSFERRED TO EACH PLY.

SIDE - PLF SHOWN IS THE EQUIVALENT UDL APPLIED TO ONE SIDE THAT THE CORRESPONDING NAILING PATTERN SHALL BE CAPABLE OF TRANSFERING. REMAINING PLF MUST BE APPLIED ON THE OPPOSITE SIDE OR ON THE TOP.

PLATES (table is in inches)

JT	TYPE	PLATES	W	LEN	Y	X
B	TMVW-p	MT20	5.0	8.0	Edge	
C	TTWW-m	MT20	8.0	9.0	Edge	3.25
D	TMW+w	MT20	2.0	4.0		
E	TMWW+t	MT20	4.0	4.0		
F	TS-t	MT20	3.0	10.0		
G	TMW+w	MT20	2.0	4.0		
H	TTWW-m	MT20	8.0	9.0	Edge	3.25
I	TMVW-p	MT20	5.0	8.0	Edge	
K	BMV1+p	MT20	3.0	6.0		
L	BMWW-t	MT20	5.0	6.0		
M	BMWWW-t	MT20	8.0	9.0	4.25	2.50
N	BS-t	MT20	5.0	6.0		
O	BMWWW-t	MT20	8.0	9.0	4.25	4.00
P	BMWW-t	MT20	5.0	6.0		
Q	BMV1+p	MT20	3.0	6.0		

DIMENSIONS, SUPPORTS AND LOADINGS SPECIFIED BY FABRICATOR TO BE VERIFIED BY BUILDING DESIGNER

BEARINGS

JT	FACTORED GROSS REACTION VERT	HORZ	MAXIMUM FACTORED GROSS REACTION DOWN	HORZ	UPLIFT	INPUT BRG IN-SX	REQRD BRG IN-SX
Q	4213	0	4213	0	0	5-8	5-8
K	3222	0	3222	0	0	5-8	5-8

UNFACTORED REACTIONS

1ST LCASE MAX./MIN. COMPONENT REACTIONS

JT	COMBINED	SNOW	LIVE	PERM.LIVE	WIND	DEAD	SOIL
Q	3267	2174 / 0	553 / 0	0 / 0	0 / 0	540 / 0	0 / 0
K	2483	1680 / 0	402 / 0	0 / 0	0 / 0	400 / 0	0 / 0

BEARING MATERIAL TO BE SPF NO.2 OR BETTER AT JOINT(S) Q, K

BRACING

TOP CHORD TO BE SHEATHED OR MAX. PURLIN SPACING = 3.59 FT.
MAX. UNBRACED BOTTOM CHORD LENGTH = 10.00 FT. OR RIGID CEILING DIRECTLY APPLIED.

ALL PITCH BREAKS AND PERIMETER CORNER JOINTS MUST BE LATERALLY RESTRAINED.

LOADING

TOTAL LOAD CASES: (4)

CHORDS

MEMB. FR-TO	MAX. FACTORED FORCE (LBS)	FACTORED VERT. LOAD (PLF) FROM	TO	LC1	MAX CSI (LC)	MAX. UNBRAC LENGTH
A- B	0 / 54	-122.2	-122.2	0.06 (1)	10.00	
B- C	-4132 / 0	-122.2	-122.2	0.09 (1)	5.55	
C- R	-8059 / 0	-122.2	-122.2	0.80 (1)	3.59	
R- S	-8059 / 0	-122.2	-122.2	0.80 (1)	3.59	
S- T	-8059 / 0	-122.2	-122.2	0.80 (1)	3.59	
T- U	-8059 / 0	-122.2	-122.2	0.80 (1)	3.59	
U- D	-8059 / 0	-122.2	-122.2	0.80 (1)	3.59	
D- E	-8059 / 0	-122.2	-122.2	0.57 (1)	3.59	
E- F	-6391 / 0	-122.2	-122.2	0.34 (1)	4.36	
F- G	-6391 / 0	-122.2	-122.2	0.34 (1)	4.36	
G- H	-6390 / 0	-122.2	-122.2	0.46 (1)	4.36	
H- I	-3056 / 0	-122.2	-122.2	0.08 (1)	6.22	
I- J	0 / 54	-122.2	-122.2	0.06 (1)	10.00	
Q- B	-4271 / 0	0.0	0.0	0.16 (1)	6.93	
K- I	-3251 / 0	0.0	0.0	0.12 (1)	7.69	
Q- V	0 / 0	-28.0	-28.0	0.15 (2)	10.00	
V- P	0 / 0	-28.0	-28.0	0.15 (2)	10.00	
P- W	0 / 3139	-28.0	-28.0	0.33 (1)	10.00	
W- X	0 / 3139	-28.0	-28.0	0.33 (1)	10.00	
X- Y	0 / 3139	-28.0	-28.0	0.33 (1)	10.00	
Y- Z	0 / 3139	-28.0	-28.0	0.33 (1)	10.00	
Z- O	0 / 3139	-28.0	-28.0	0.33 (1)	10.00	
O- N	0 / 7057	-28.0	-28.0	0.54 (1)	10.00	
N- M	0 / 7057	-28.0	-28.0	0.54 (1)	10.00	
M- L	0 / 2320	-28.0	-28.0	0.23 (1)	10.00	
L- K	0 / 0	-28.0	-28.0	0.09 (2)	10.00	

WEBS

MEMB. FR-TO	MAX. FACTORED FORCE (LBS)	MAX CSI (LC)
P- C	-830 / 95	0.11 (1)
C- O	0 / 5526	0.68 (1)
O- D	-1486 / 0	0.19 (1)
M- G	-989 / 0	0.13 (1)
M- H	0 / 4571	0.57 (1)
L- H	-678 / 0	0.09 (1)
B- P	0 / 3405	0.42 (1)
L- I	0 / 2519	0.31 (1)
O- E	0 / 1741	0.22 (1)
E- M	-1158 / 0	0.20 (1)

FACTORED CONCENTRATED LOADS (LBS)

JT	LOC.	LC1	MAX-	MAX+	FACE	DIR.	TYPE
C	2-11-8	-171	-171	---	FRONT	VERT	TOTAL
O	10-2-8	-2280	-2280	---	BACK	VERT	TOTAL
R	3-11-4	-148	-148	---	BACK	VERT	TOTAL
S	5-11-4	-147	-147	---	BACK	VERT	TOTAL
T	7-11-4	-147	-147	---	BACK	VERT	TOTAL
U	8-11-4	-147	-147	---	BACK	VERT	TOTAL
V	1-11-4	-40	-70	---	BACK	VERT	TOTAL
W	3-11-4	-40	-70	---	BACK	VERT	TOTAL
X	5-11-4	-40	-70	---	BACK	VERT	TOTAL
Y	7-11-4	-40	-70	---	BACK	VERT	TOTAL

LICENSED PROFESSIONAL ENGINEER
9-7-17
S. KATSOULAKOS
PROVINCE OF ONTARIO

DWG NO. TAM 4520717
STRUCTURAL COMPONENT ONLY

DESIGN CRITERIA

*** SPECIAL LOADS ANALYSIS ***
GEOMETRY AND/OR BASIC LOADS CHANGED BY USER.
LOADS WERE DERIVED FROM USER INPUT
NO FURTHER MODIFICATIONS WERE MADE

SPECIFIED LOADS:

TOP CH.	LL	=	38.3	PSF
	DL	=	3.0	PSF
BOT CH.	LL	=	10.5	PSF
	DL	=	7.0	PSF
TOTAL LOAD		=	58.7	PSF

SPACING = 24.0 IN. C/C

LOADING IN FLAT SECTION BASED ON A SLOPE OF 6.00/12

*** NON STANDARD GIRDER ***
ADDT'L USER-DEFINED LOADS APPLIED TO ALL LOAD CASES.

THIS TRUSS IS DESIGNED FOR RESIDENTIAL OR SMALL BUILDING REQUIREMENTS OF PART 9, NBCC 2010

THIS DESIGN COMPLIES WITH:
- PART 9 OF OBC 2012 , BCBC 2012 , ABC 2014
- CSA 086-09
- TPIC 2011

(55 % OF 54.4 P.S.F. G.S.L. PLUS 8.4 P.S.F. RAIN LOAD) EQUALS 38.3 P.S.F. SPECIFIED ROOF LIVE LOAD

ALLOWABLE DEFL.(LL)= L/360 (0.86")
CALCULATED VERT. DEFL.(LL) = L/ 999 (0.18")
ALLOWABLE DEFL.(TL)= L/360 (0.86")
CALCULATED VERT. DEFL.(TL) = L/ 999 (0.27")

CSI: TC=0.80 (C-D:1) , BC=0.54 (M-O:1) , WB=0.68 (C-O:1) , SSI=0.38 (C-D:1)

DOL LUMBER=1.00 NAIL=1.00 LS BEND=1.00 COMP=1.00 SHEAR=1.00 TENS= 1.00

COMPANION LIVE LOAD FACTOR = 0.50

AUTOSOLVE HEELS OFF

TRUSS PLATE MANUFACTURER IS NOT RESPONSIBLE FOR QUALITY CONTROL IN THE TRUSS MANUFACTURING PLANT .

NAIL VALUES

PLATE	GRIP(DRY) (PSI) MAX	MIN	SHEAR (PLI) MAX	MIN	SECTION (PLI) MAX	MIN
MT20	618	354	1667	822	2284	1656

PLATE PLACEMENT TOL. = 0.250 inches

PLATE ROTATION TOL. = 5.0 Deg.

JSI GRIP= 0.88 (E) (INPUT = 0.90)
JSI METAL= 0.64 (N) (INPUT = 1.00)

CONTINUED ON PAGE 2

JOB NAME	TRUSS NAME	QUANTITY	PLY	JOB DESC. 42067	DRWG NO.
266140	T10Z	1	2	TRUSS DESC.	

Edge - INDICATES REFERENCE CORNER OF PLATE TOUCHES EDGE OF CHORD.

HANGERS NOTES

1) SPECIAL HANGER(S) OR CONNECTION(S) REQUIRED TO SUPPORT CONCENTRATED LOAD(S) 171.3 lbs FACTORED DOWN AT 2-11-8, 148.2 lbs FACTORED DOWN AT 3-11-4, 147.1 lbs FACTORED DOWN AT 5-11-4, AND 147.1 lbs FACTORED DOWN AT 7-11-4, AND 147.1 lbs FACTORED DOWN AT 8-11-4 ON TOP CHORD, AND 69.9 lbs FACTORED DOWN AT 1-11-4, 69.9 lbs FACTORED DOWN AT 3-11-4, 69.9 lbs FACTORED DOWN AT 5-11-4, 69.9 lbs FACTORED DOWN AT 7-11-4, AND 69.9 lbs FACTORED DOWN AT 8-11-4, AND 2279.7 lbs FACTORED DOWN AT 10-2-8 ON BOTTOM CHORD. DESIGN FOR UNSPECIFIED CONNECTION(S) IS DELEGATED TO THE BUILDING DESIGNER.

FACTORED CONCENTRATED LOADS (LBS)

JT	LOC.	LC1	MAX-	MAX+	FACE	DIR.	TYPE
Z	8-11-4	-40	-70	---	BACK	VERT	TOTAL

LICENSED PROFESSIONAL ENGINEER
9-777
S. KATSOULAKOS
PROVINCE OF ONTARIO

DWG NO. TAM 45201-17
STRUCTURAL
COMPONENT ONLY

pg 2/4

JOB NAME	TRUSS NAME	QUANTITY	PLY	JOB DESC. 42067	DRWG NO.
272252	T10Z1	1	2	TRUSS DESC.	

Tamarack Roof Truss, Burlington

Version 8.030 S Oct 5 2016 MiTek Industries, Inc. Thu Sep 07 15:14:33 2017 Page 1

ID:T410TgzMB153Sw?eGMLZlxzAeat-SlldVtE11N?PogJbd6yLOHDLzlBlEqhIzamyhVyg?Fa

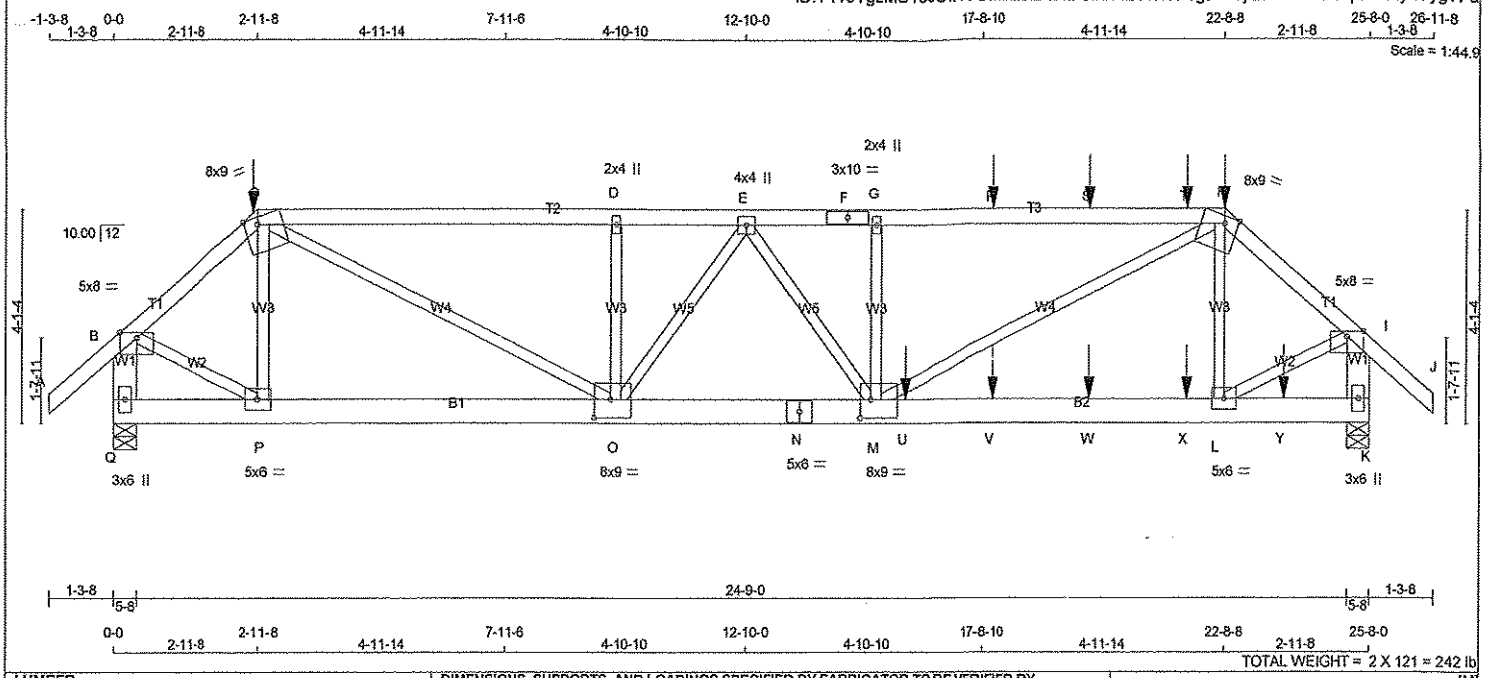

LUMBER

N. L. G. A. RULES

CHORDS	SIZE		LUMBER	DESCR.
A - C	2x4	DRY	2100F 1.8E	SPF
C - F	2x4	DRY	2100F 1.8E	SPF
F - H	2x4	DRY	2100F 1.8E	SPF
H - J	2x4	DRY	2100F 1.8E	SPF
Q - B	2x6	DRY	No.2	SPF
K - I	2x6	DRY	No.2	SPF
Q - N	2x6	DRY	No.2	SPF
N - K	2x6	DRY	No.2	SPF
ALL WEBS EXCEPT	2x3	DRY	No.2	SPF

DRY: SEASONED LUMBER.

DESIGN CONSISTS OF 2 TRUSSES BUILT SEPARATELY THEN FASTENED TOGETHER AS FOLLOWS:

CHORDS	#ROWS	SURFACE SPACING (IN)	LOAD(PLF)
TOP CHORDS : (0.122"X3") SPIRAL NAILS			
A- C	1	12	SIDE(65.9)
C- F	1	12	SIDE(65.9)
F- H	1	12	SIDE(65.9)
H- J	1	12	SIDE(65.9)
Q- B	2	12	TOP
K- I	2	12	TOP
BOTTOM CHORDS : (0.122"X3") SPIRAL NAILS			
Q- N	2	12	TOP
N- K	2	12	SIDE(0.0)
WEBS : (0.122"X3") SPIRAL NAILS			
2x3	1	6	

NAILS TO BE DRIVEN FROM ONE SIDE ONLY.

GIRDER NAILING ASSUMES NAILED HANGERS ARE FASTENED WITH MIN. 3-0 INCH NAILS.

TOP - COMPONENTS ARE LOADED FROM THE TOP AND MUST BE PLACED ON TOP EDGE OF ALL PLIES FOR THE LOAD TO BE TRANSFERRED TO EACH PLY.

SIDE - PLF SHOWN IS THE EQUIVALENT UDL APPLIED TO ONE SIDE THAT THE CORRESPONDING NAILING PATTERN SHALL BE CAPABLE OF TRANSFERING. REMAINING PLF MUST BE APPLIED ON THE OPPOSITE SIDE OR ON THE TOP.

PLATES (table is in inches)

JT	TYPE	PLATES	W	LEN	Y	X
B	TMVW-p	MT20	5.0	8.0	Edge	
C	TTWW-m	MT20	8.0	9.0	Edge	3.25
D	TMW+w	MT20	2.0	4.0		
E	TMWW+t	MT20	4.0	4.0		
F	TS-t	MT20	3.0	10.0		
G	TMW+w	MT20	2.0	4.0		
H	TTWW-m	MT20	8.0	9.0	Edge	3.25
I	TMVW-p	MT20	5.0	8.0	Edge	
K	BMV1+p	MT20	3.0	6.0		
L	BMWW-t	MT20	5.0	6.0		
M	BMWWW-t	MT20	8.0	9.0	4.25	2.50
N	BS-t	MT20	5.0	6.0		
O	BMWWW-t	MT20	8.0	9.0	4.25	4.00
P	BMWW-t	MT20	5.0	6.0		
Q	BMV1+p	MT20	3.0	6.0		

Edge - INDICATES REFERENCE CORNER OF PLATE TOUCHES EDGE OF CHORD.

DIMENSIONS, SUPPORTS AND LOADINGS SPECIFIED BY FABRICATOR TO BE VERIFIED BY BUILDING DESIGNER

BEARINGS

JT	FACTORED GROSS REACTION VERT	HORZ	MAXIMUM FACTORED GROSS REACTION DOWN	HORZ	UPLIFT	INPUT BRG IN-SX	REQRD BRG IN-SX
Q	3077	0	3077	0	0	5-8	5-8
K	3888	0	3888	0	0	5-8	5-8

UNFACTORED REACTIONS

1ST LCASE — MAX./MIN. COMPONENT REACTIONS

JT	COMBINED	SNOW	LIVE	PERM.LIVE	WIND	DEAD	SOIL
Q	2374	1601 / 0	388 / 0	0 / 0	0 / 0	384 / 0	0 / 0
K	3017	2005 / 0	513 / 0	0 / 0	0 / 0	499 / 0	0 / 0

BEARING MATERIAL TO BE SPF NO.2 OR BETTER AT JOINT(S) Q, K

BRACING

TOP CHORD TO BE SHEATHED OR MAX. PURLIN SPACING = 3.91 FT.
MAX. UNBRACED BOTTOM CHORD LENGTH = 10.00 FT. OR RIGID CEILING DIRECTLY APPLIED.

ALL PITCH BREAKS AND PERIMETER CORNER JOINTS MUST BE LATERALLY RESTRAINED.

LOADING

TOTAL LOAD CASES: (4)

CHORDS

MEMB. FR-TO	MAX. FACTORED FORCE (LBS)	FACTORED VERT. LOAD (PLF) FROM	TO	LC1	MAX CSI (LC)	MAX. UNBRAC LENGTH
A- B	0 / 54	-122.2	-122.2	0.06 (1)	10.00	
B- C	-2909 / 0	-122.2	-122.2	0.08 (1)	6.25	
C- D	-5636 / 0	-122.2	-122.2	0.43 (1)	4.60	
D- E	-5637 / 0	-122.2	-122.2	0.33 (1)	4.60	
E- F	-7007 / 0	-122.2	-122.2	0.50 (1)	3.94	
F- G	-7007 / 0	-122.2	-122.2	0.50 (1)	3.94	
G- R	-7007 / 0	-122.2	-122.2	0.70 (1)	3.91	
R- S	-7007 / 0	-122.2	-122.2	0.70 (1)	3.91	
S- T	-7007 / 0	-122.2	-122.2	0.70 (1)	3.91	
T- H	-7007 / 0	-122.2	-122.2	0.70 (1)	3.91	
H- I	-3837 / 0	-122.2	-122.2	0.09 (1)	5.71	
I- J	0 / 54	-122.2	-122.2	0.06 (1)	10.00	
Q- B	-3111 / 0	0.0	0.0	0.11 (1)	7.81	
K- I	-3992 / 0	0.0	0.0	0.15 (1)	7.11	
Q- P	0 / 0	-28.0	-28.0	0.09 (2)	10.00	
P- O	0 / 2210	-28.0	-28.0	0.23 (1)	10.00	
O- N	0 / 6173	-28.0	-28.0	0.55 (1)	10.00	
N- M	0 / 6173	-28.0	-28.0	0.55 (1)	10.00	
M- U	0 / 2920	-28.0	-28.0	0.44 (1)	10.00	
U- V	0 / 2920	-28.0	-28.0	0.44 (1)	10.00	
V- W	0 / 2920	-28.0	-28.0	0.44 (1)	10.00	
W- X	0 / 2920	-28.0	-28.0	0.44 (1)	10.00	
X- L	0 / 2920	-28.0	-28.0	0.44 (1)	10.00	
L- Y	0 / 0	-28.0	-28.0	0.18 (1)	10.00	
Y- K	0 / 0	-28.0	-28.0	0.18 (1)	10.00	

WEBS

MEMB. FR-TO	MAX. FACTORED FORCE (LBS)	MAX CSI (LC)
P- C	-612 / 10	0.08 (1)
C- O	0 / 3849	0.48 (1)
O- D	-985 / 0	0.12 (1)
M- G	-1298 / 0	0.16 (1)
M- H	0 / 4590	0.57 (1)
L- H	-602 / 158	0.08 (1)
B- P	0 / 2398	0.30 (1)
L- I	0 / 3162	0.39 (1)
O- E	-931 / 0	0.16 (1)
E- M	0 / 1449	0.18 (1)

FACTORED CONCENTRATED LOADS (LBS)

JT	LOC.	LC1	MAX-	MAX+	FACE	DIR.	TYPE
C	2-11-8	-171	-171	---	FRONT	VERT	TOTAL
H	22-8-8	-171	-171	---	FRONT	VERT	TOTAL
R	17-11-4	-147	-147	---	FRONT	VERT	TOTAL
S	19-11-4	-147	-147	---	FRONT	VERT	TOTAL
T	21-11-4	-161	-161	---	FRONT	VERT	TOTAL
U	16-0-12	-1813	-1813	---	FRONT	VERT	TOTAL
V	17-11-4	-40	-70	---	FRONT	VERT	TOTAL
W	19-11-4	-40	-70	---	FRONT	VERT	TOTAL
X	21-11-4	-40	-70	---	FRONT	VERT	TOTAL
Y	23-11-4	-40	-70	---	FRONT	VERT	TOTAL

LICENSED PROFESSIONAL ENGINEER
S. KATSOULAKOS
PROVINCE OF ONTARIO

DESIGN CRITERIA [M]

*** SPECIAL LOADS ANALYSIS ***
GEOMETRY AND/OR BASIC LOADS CHANGED BY USER.
LOADS WERE DERIVED FROM USER INPUT
NO FURTHER MODIFICATIONS WERE MADE

SPECIFIED LOADS:

TOP CH.	LL	=	38.3	PSF
	DL	=	3.0	PSF
BOT CH.	LL	=	10.5	PSF
	DL	=	7.0	PSF
TOTAL LOAD		=	58.7	PSF

SPACING = 24.0 IN. C/C

LOADING IN FLAT SECTION BASED ON A SLOPE OF 6.00/12

*** NON STANDARD GIRDER ***
ADDT'L USER-DEFINED LOADS APPLIED TO ALL LOAD CASES.

THIS TRUSS IS DESIGNED FOR RESIDENTIAL OR SMALL BUILDING REQUIREMENTS OF PART 9, NBCC 2010

THIS DESIGN COMPLIES WITH:
- PART 9 OF OBC 2012 , BCBC 2012 , ABC 2014
- CSA 086-09
- TPIC 2011

(55 % OF 54.4 P.S.F. G.S.L. PLUS 8.4 P.S.F. RAIN LOAD) EQUALS 38.3 P.S.F. SPECIFIED ROOF LIVE LOAD

ALLOWABLE DEFL.(LL)= L/360 (0.86")
CALCULATED VERT. DEFL.(LL) = L/ 999 (0.16")
ALLOWABLE DEFL.(TL)= L/360 (0.85")
CALCULATED VERT. DEFL.(TL) = L/ 999 (0.24")

CSI: TC=0.70 (G-H:1) , BC=0.55 (M-O:1) , WB=0.57 (H-M:1) , SSI=0.59 (L-M:1)

DOL LUMBER=1.00 NAIL=1.00 LS BEND=1.00 COMP=1.00 SHEAR=1.00 TENS= 1.00

COMPANION LIVE LOAD FACTOR = 0.50

AUTOSOLVE HEELS OFF

TRUSS PLATE MANUFACTURER IS NOT RESPONSIBLE FOR QUALITY CONTROL IN THE TRUSS MANUFACTURING PLANT .

NAIL VALUES

PLATE	GRIP(DRY) (PSI) MAX	MIN	SHEAR (PLI) MAX	MIN	SECTION (PLI) MAX	MIN
MT20	618	354	1667	822	2284	1656

PLATE PLACEMENT TOL. = 0.250 inches

PLATE ROTATION TOL. = 5.0 Deg.

JSI GRIP= 0.81 (L) (INPUT = 0.90)
JSI METAL= 0.52 (N) (INPUT = 1.00)

DWG NO. TAM 452-17
STRUCTURAL
COMPONENTS ONLY

CONTINUED ON PAGE 2

HANGERS NOTES

1) SPECIAL HANGER(S) OR CONNECTION(S) REQUIRED TO SUPPORT CONCENTRATED LOAD(S) 147.1 lbs FACTORED DOWN AT 17-11-4, 147.1 lbs FACTORED DOWN AT 19-11-4, 161.0 lbs FACTORED DOWN AT 21-11-4, AND 171.3 lbs FACTORED DOWN AT 2-11-8, AND 171.3 lbs FACTORED DOWN AT 22-8-8 ON TOP CHORD, AND 1813.3 lbs FACTORED DOWN AT 16-0-12, 69.9 lbs FACTORED DOWN AT 17-11-4, 69.9 lbs FACTORED DOWN AT 19-11-4, AND 69.9 lbs FACTORED DOWN AT 21-11-4, AND 69.9 lbs FACTORED DOWN AT 23-11-4 ON BOTTOM CHORD. DESIGN FOR UNSPECIFIED CONNECTION(S) IS DELEGATED TO THE BUILDING DESIGNER.

LICENSED PROFESSIONAL ENGINEER
9-7-17
S. KATSOULAKOS
PROVINCE OF ONTARIO

P62

DWG NO. TAM 4520217
STRUCTURAL
COMPONENT ONLY

JOB NAME	TRUSS NAME	QUANTITY	PLY	JOB DESC. 42067	DRWG NO.
266140	T11	2	1	TRUSS DESC.	

Tamarack Roof Truss, Burlington

Version 8.000 S Jan 15 2016 MiTek Industries, Inc. Thu Jun 02 08:36:17 2016 Page 1
ID:T410TgzMB153Sw?eGMLZlxzAeat-nau0w?Nn3W8D_zAqEpL0fXjPBNKk6yEFReoR1JzAOGy

-1-3-8 1-3-8 0-0 4-1-14 4-1-14 5-9-13 9-11-11 5-8-9 15-8-5 5-9-13 21-6-2 4-1-14 25-8-0 1-3-8 26-11-8

Scale = 1:45.5

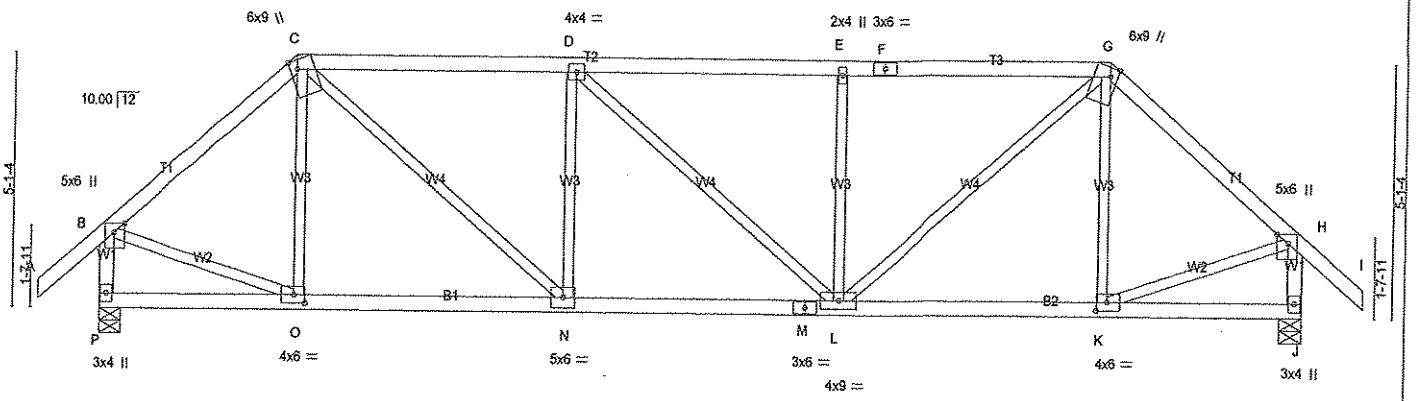

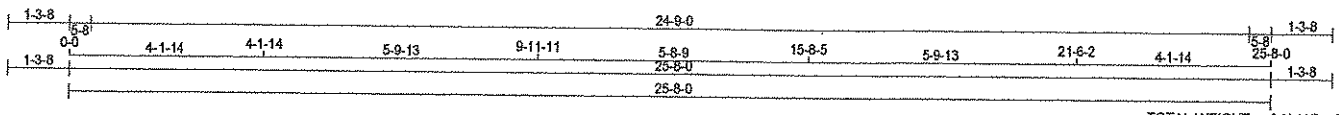

TOTAL WEIGHT = 2 X 107 = 215 lb [M]

LUMBER

N. L. G. A. RULES

CHORDS	SIZE		LUMBER	DESCR.
A - C	2x4	DRY	No.2	SPF
C - F	2x4	DRY	No.2	SPF
F - G	2x4	DRY	No.2	SPF
G - I	2x4	DRY	No.2	SPF
P - B	2x4	DRY	No.2	SPF
J - H	2x4	DRY	No.2	SPF
P - M	2x4	DRY	No.2	SPF
M - J	2x4	DRY	No.2	SPF
ALL WEBS EXCEPT	2x3	DRY	No.2	SPF

DRY: SEASONED LUMBER.

PLATES (table is in inches)

JT	TYPE	PLATES	W	LEN	Y	X
B	TMVW+p	MT20	5.0	6.0	Edge	2.75
C	TTWW+m	MT20	6.0	9.0	Edge	1.75
D	TMWW-t	MT20	4.0	4.0		
E	TMW+w	MT20	2.0	4.0		
F	TS-t	MT20	3.0	6.0		
G	TTWW+m	MT20	6.0	9.0	Edge	1.75
H	TMVW+p	MT20	5.0	6.0	Edge	2.75
J	BMV1+p	MT20	3.0	4.0		
K	BMWW-t	MT20	4.0	6.0	2.00	2.75
L	BMWWW-t	MT20	4.0	9.0		
M	BS-t	MT20	3.0	6.0		
N	BMWW-t	MT20	5.0	6.0		
O	BMWW-t	MT20	4.0	6.0	2.00	2.75
P	BMV1+p	MT20	3.0	4.0		

Edge - INDICATES REFERENCE CORNER OF PLATE TOUCHES EDGE OF CHORD.

DIMENSIONS, SUPPORTS AND LOADINGS SPECIFIED BY FABRICATOR TO BE VERIFIED BY BUILDING DESIGNER

BEARINGS

JT	FACTORED GROSS REACTION VERT	HORZ	MAXIMUM FACTORED GROSS REACTION DOWN	HORZ	UPLIFT	INPUT BRG IN-SX	REQRD BRG IN-SX
P	2097	0	2097	0	0	5-8	3-5
J	2097	0	2097	0	0	5-8	3-5

UNFACTORED REACTIONS

JT	1ST LCASE COMBINED	MAX./MIN. COMPONENT REACTIONS SNOW	LIVE	PERM.LIVE	WIND	DEAD	SOIL
P	1622	1087 / 0	270 / 0	0 / 0	0 / 0	265 / 0	0 / 0
J	1622	1087 / 0	270 / 0	0 / 0	0 / 0	265 / 0	0 / 0

BEARING MATERIAL TO BE SPF NO.2 OR BETTER AT JOINT(S) P, J

BRACING

TOP CHORD TO BE SHEATHED OR MAX. PURLIN SPACING = 3.48 FT.
MAX. UNBRACED BOTTOM CHORD LENGTH = 10.00 FT. OR RIGID CEILING DIRECTLY APPLIED.

ALL PITCH BREAKS AND PERIMETER CORNER JOINTS MUST BE LATERALLY RESTRAINED.

LOADING

TOTAL LOAD CASES: (4)

CHORDS

MEMB. FR-TO	MAX. FACTORED FORCE (LBS)	FACTORED VERT. LOAD LC1 (PLF) FROM	TO	MAX CSI (LC)	MAX. UNBRAC LENGTH
A- B	0 / 54	-122.2	-122.2	0.17 (1)	10.00
B- C	-1859 / 0	-122.2	-122.2	0.45 (1)	4.42
C- D	-2538 / 0	-122.2	-122.2	0.75 (1)	3.48
D- E	-2535 / 0	-122.2	-122.2	0.74 (1)	3.48
E- F	-2536 / 0	-122.2	-122.2	0.73 (1)	3.50
F- G	-2536 / 0	-122.2	-122.2	0.73 (1)	3.50
G- H	-1859 / 0	-122.2	-122.2	0.45 (1)	4.42
H- I	0 / 54	-122.2	-122.2	0.17 (1)	10.00
P- B	-2054 / 0	0.0	0.0	0.22 (1)	5.90
J- H	-2054 / 0	0.0	0.0	0.22 (1)	5.90
P- O	0 / 0	-28.0	-28.0	0.17 (2)	10.00
O- N	0 / 1418	-28.0	-28.0	0.32 (1)	10.00
N- M	0 / 2538	-28.0	-28.0	0.50 (1)	10.00
M- L	0 / 2538	-28.0	-28.0	0.50 (1)	10.00
L- K	0 / 1418	-28.0	-28.0	0.32 (1)	10.00
K- J	0 / 0	-28.0	-28.0	0.17 (2)	10.00

WEBS

MEMB. FR-TO	MAX. FACTORED FORCE (LBS)	MAX CSI (LC)
O- C	-279 / 102	0.11 (1)
C- N	0 / 1451	0.33 (1)
N- D	-762 / 0	0.29 (1)
D- L	-4 / 0	0.00 (1)
L- E	-760 / 0	0.29 (1)
L- G	0 / 1447	0.33 (1)
K- G	-278 / 102	0.11 (1)
B- O	0 / 1489	0.34 (1)
K- H	0 / 1490	0.34 (1)

LICENSED PROFESSIONAL ENGINEER
616
S. KATSOULAKOS
PROVINCE OF ONTARIO

DESIGN CRITERIA

SPECIFIED LOADS:

TOP CH.	LL	=	38.3	PSF
	DL	=	3.0	PSF
BOT CH.	LL	=	10.5	PSF
	DL	=	7.0	PSF
TOTAL LOAD		=	58.7	PSF

SPACING = 24.0 IN. C/C

LOADING IN FLAT SECTION BASED ON A SLOPE OF 6.00/12

THIS TRUSS IS DESIGNED FOR RESIDENTIAL OR SMALL BUILDING REQUIREMENTS OF PART 9, NBCC 2010

THIS DESIGN COMPLIES WITH:
- PART 9 OF OBC 2012 , BCBC 2012 , ABC 2014
- CSA 086-09
- TPIC 2011

(55 % OF 54.4 P.S.F. G.S.L. PLUS 8.4 P.S.F. RAIN LOAD) EQUALS 38.3 P.S.F. SPECIFIED ROOF LIVE LOAD

ALLOWABLE DEFL.(LL)= L/360 (0.86")
CALCULATED VERT. DEFL.(LL) = L/ 999 (0.13")
ALLOWABLE DEFL.(TL)= L/360 (0.86")
CALCULATED VERT. DEFL.(TL) = L/ 999 (0.20")

CSI: TC=0.75 (C-D:1) , BC=0.50 (L-N:1) , WB=0.34 (H-K:1) , SSI=0.33 (C-D:1)

DOL LUMBER=1.00 NAIL=1.00 LS BEND=1.10 COMP=1.10 SHEAR=1.10 TENS= 1.10

COMPANION LIVE LOAD FACTOR = 0.50

TRUSS PLATE MANUFACTURER IS NOT RESPONSIBLE FOR QUALITY CONTROL IN THE TRUSS MANUFACTURING PLANT .

NAIL VALUES

PLATE	GRIP(DRY) (PSI) MAX	MIN	SHEAR (PLI) MAX	MIN	SECTION (PLI) MAX	MIN
MT20	618	354	1667	822	2284	1656

PLATE PLACEMENT TOL. = 0.250 inches

PLATE ROTATION TOL. = 5.0 Deg.

JSI GRIP= 0.87 (L) (INPUT = 0.90)
JSI METAL= 0.65 (M) (INPUT = 1.00)

DWG NO. TAM 25704-16
STRUCTURAL
COMPONENT ONLY

JOB NAME	TRUSS NAME	QUANTITY	PLY	JOB DESC. 42067	DRWG NO.
266140	T12	2	1	TRUSS DESC.	

Tamarack Roof Truss, Burlington

Version 8.000 S Jan 15 2016 MiTek Industries, Inc. Thu Jun 02 08:36:18 2016 Page 1

ID:T410TgzMB153Sw?eGMLZlxzAeat-FmSO8LNQpqG4c7I1oXsFCIGZEmgTrPkPgHY_ZlzAOGx

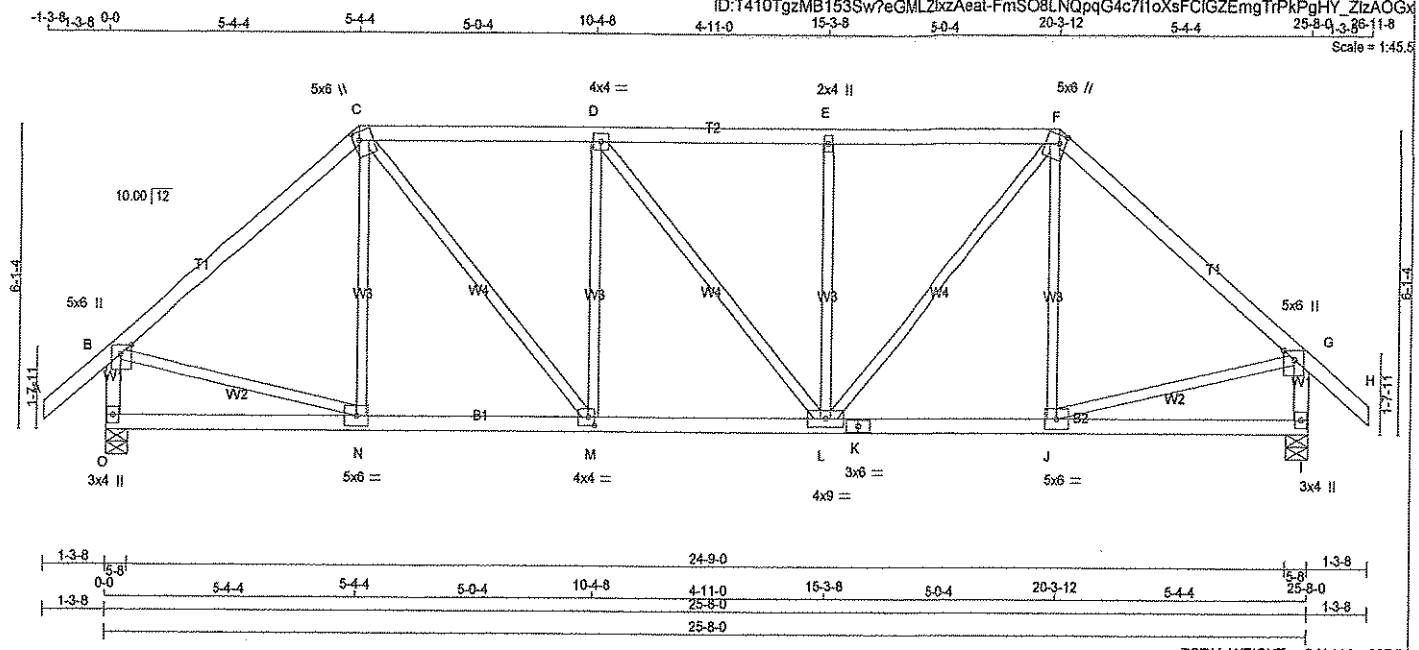

TOTAL WEIGHT = 2 X 114 = 227 lb [M]

LUMBER

N. L. G. A. RULES

CHORDS	SIZE		LUMBER	DESCR.
A - C	2x4	DRY	No.2	SPF
C - F	2x4	DRY	No.2	SPF
F - H	2x4	DRY	No.2	SPF
O - B	2x4	DRY	No.2	SPF
I - G	2x4	DRY	No.2	SPF
O - K	2x4	DRY	No.2	SPF
K - I	2x4	DRY	No.2	SPF
ALL WEBS EXCEPT	2x3	DRY	No.2	SPF

DRY: SEASONED LUMBER.

PLATES (table is in inches)

JT	TYPE	PLATES	W	LEN	Y	X
B	TMW+p	MT20	5.0	6.0	Edge	2.75
C	TTWW+m	MT20	5.0	6.0	2.00	1.50
D	TMWW-t	MT20	4.0	4.0		
E	TMW+w	MT20	2.0	4.0		
F	TTWW+m	MT20	5.0	6.0	2.00	1.50
G	TMW+p	MT20	5.0	6.0	Edge	2.75
I	BMV1+p	MT20	3.0	4.0		
J	BMWW-t	MT20	5.0	6.0		
K	BS-t	MT20	3.0	6.0		
L	BMWWW-t	MT20	4.0	9.0		
M	BMWW-t	MT20	4.0	4.0	2.00	1.50
N	BMWW-t	MT20	5.0	6.0		
O	BMV1+p	MT20	3.0	4.0		

Edge - INDICATES REFERENCE CORNER OF PLATE TOUCHES EDGE OF CHORD.

DIMENSIONS, SUPPORTS AND LOADINGS SPECIFIED BY FABRICATOR TO BE VERIFIED BY BUILDING DESIGNER

BEARINGS

JT	FACTORED GROSS REACTION VERT	HORZ	MAXIMUM FACTORED GROSS REACTION DOWN	HORZ	UPLIFT	INPUT BRG IN-SX	REQRD BRG IN-SX
O	2097	0	2097	0	0	5-8	3-5
I	2097	0	2097	0	0	5-8	3-5

UNFACTORED REACTIONS

JT	1ST LCASE COMBINED	MAX./MIN. COMPONENT REACTIONS SNOW	LIVE	PERM.LIVE	WIND	DEAD	SOIL
O	1622	1087 / 0	270 / 0	0 / 0	0 / 0	265 / 0	0 / 0
I	1622	1087 / 0	270 / 0	0 / 0	0 / 0	265 / 0	0 / 0

BEARING MATERIAL TO BE SPF NO.2 OR BETTER AT JOINT(S) O, I

BRACING

TOP CHORD TO BE SHEATHED OR MAX. PURLIN SPACING = 3.91 FT.
MAX. UNBRACED BOTTOM CHORD LENGTH = 10.00 FT. OR RIGID CEILING DIRECTLY APPLIED.

ALL PITCH BREAKS AND PERIMETER CORNER JOINTS MUST BE LATERALLY RESTRAINED.

LOADING

TOTAL LOAD CASES: (4)

CHORDS

MEMB. FR-TO	MAX. FACTORED FORCE (LBS)	FACTORED VERT. LOAD LC1 (PLF) FROM	TO	MAX CSI (LC)	MAX. UNBRAC LENGTH
A- B	0 / 54	-122.2	-122.2	0.17 (1)	10.00
B- C	-1864 / 0	-122.2	-122.2	0.80 (1)	3.91
C- D	-2108 / 0	-122.2	-122.2	0.50 (1)	4.11
D- E	-2106 / 0	-122.2	-122.2	0.50 (1)	4.11
E- F	-2105 / 0	-122.2	-122.2	0.50 (1)	4.13
F- G	-1864 / 0	-122.2	-122.2	0.80 (1)	3.91
G- H	0 / 54	-122.2	-122.2	0.17 (1)	10.00
O- B	-2035 / 0	0.0	0.0	0.22 (1)	5.92
I- G	-2035 / 0	0.0	0.0	0.22 (1)	5.92

WEBS

MEMB. FR-TO	MAX. FACTORED FORCE (LBS)	MAX CSI (LC)
N- C	-175 / 159	0.10 (1)
C- M	0 / 1041	0.23 (1)
M- D	-655 / 0	0.38 (1)
D- L	-3 / 0	0.00 (1)
L- E	-654 / 0	0.38 (1)
L- F	0 / 1037	0.23 (1)
J- F	-173 / 159	0.10 (1)
B- N	0 / 1469	0.33 (1)
J- G	0 / 1470	0.33 (1)
O- N	0 / 0	0.19 (3)
N- M	0 / 1426	0.34 (2)
M- L	0 / 2108	0.40 (1)
L- K	0 / 1426	0.34 (2)
K- J	0 / 1426	0.34 (2)
J- I	0 / 0	0.19 (3)

DESIGN CRITERIA

SPECIFIED LOADS:

TOP CH.	LL	=	38.3	PSF
	DL	=	3.0	PSF
BOT CH.	LL	=	10.5	PSF
	DL	=	7.0	PSF
TOTAL LOAD		=	58.7	PSF

SPACING = 24.0 IN. C/C

LOADING IN FLAT SECTION BASED ON A SLOPE OF 6.00/12

THIS TRUSS IS DESIGNED FOR RESIDENTIAL OR SMALL BUILDING REQUIREMENTS OF PART 9, NBCC 2010

THIS DESIGN COMPLIES WITH:
- PART 9 OF OBC 2012 , BCBC 2012 , ABC 2014
- CSA 086-09
- TPIC 2011

(55 % OF 54.4 P.S.F. G.S.L. PLUS 8.4 P.S.F. RAIN LOAD) EQUALS 38.3 P.S.F. SPECIFIED ROOF LIVE LOAD

ALLOWABLE DEFL.(LL)= L/360 (0.86")
CALCULATED VERT. DEFL.(LL) = L/ 999 (0.09")
ALLOWABLE DEFL.(TL)= L/360 (0.86")
CALCULATED VERT. DEFL.(TL) = L/ 999 (0.15")

CSI: TC=0.80 (F-G:1) , BC=0.40 (L-M:1) , WB=0.38 (D-M:1) , SSI=0.28 (C-D:1)

DOL LUMBER=1.00 NAIL=1.00 LS BEND=1.10 COMP=1.10 SHEAR=1.10 TENS= 1.10

COMPANION LIVE LOAD FACTOR = 0.50

TRUSS PLATE MANUFACTURER IS NOT RESPONSIBLE FOR QUALITY CONTROL IN THE TRUSS MANUFACTURING PLANT .

NAIL VALUES

PLATE	GRIP(DRY) (PSI) MAX	MIN	SHEAR (PLI) MAX	MIN	SECTION (PLI) MAX	MIN
MT20	618	354	1667	822	2284	1656

PLATE PLACEMENT TOL. = 0.250 inches

PLATE ROTATION TOL. = 5.0 Deg.

JSI GRIP= 0.88 (F) (INPUT = 0.90)
JSI METAL= 0.38 (G) (INPUT = 1.00)

LICENSED PROFESSIONAL ENGINEER
6216
S. KATSOULAKOS
PROVINCE OF ONTARIO

DWG NO. TAM25705.16
STRUCTURAL
COMPONENT ONLY

JOB NAME	TRUSS NAME	QUANTITY	PLY	JOB DESC. 42067	DRWG NO.
266140	T13	2	1	TRUSS DESC.	

Tamarack Roof Truss, Burlington

Version 8.000 S Jan 15 2016 MiTek Industries, Inc. Thu Jun 02 08:36:18 2016 Page 1

ID:T410TgzMB153Sw?eGMLZlxzAeat-FmSO8LNQpqG4c7I1oXsFCIGb2mgnrG3PgHY_ZlzAOGx

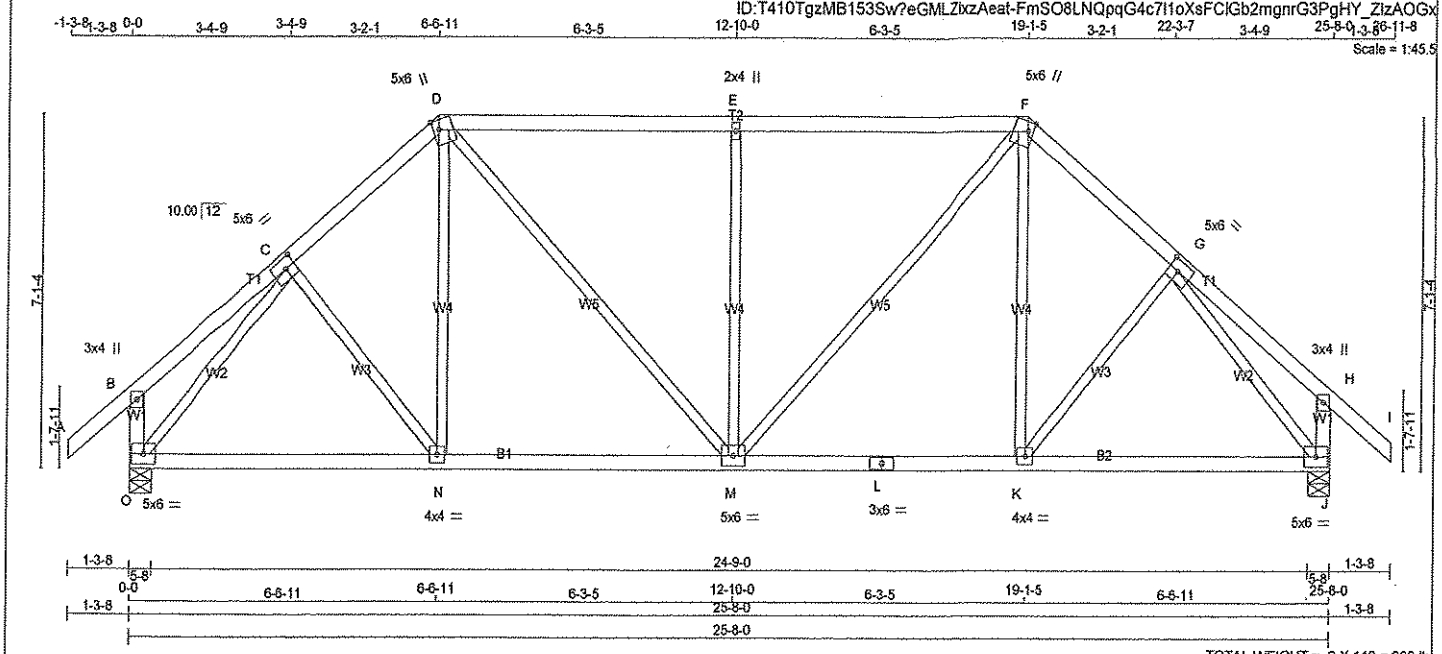

TOTAL WEIGHT = 2 X 116 = 233 lb

LUMBER

N. L. G. A. RULES

CHORDS	SIZE		LUMBER	DESCR.
A - D	2x4	DRY	No.2	SPF
D - F	2x4	DRY	No.2	SPF
F - I	2x4	DRY	No.2	SPF
O - B	2x4	DRY	No.2	SPF
J - H	2x4	DRY	No.2	SPF
O - L	2x4	DRY	No.2	SPF
L - J	2x4	DRY	No.2	SPF
ALL WEBS EXCEPT	2x3	DRY	No.2	SPF

DRY: SEASONED LUMBER.

PLATES (table is in inches)

JT	TYPE	PLATES	W	LEN	Y	X
B	TMV+p	MT20	3.0	4.0		
C	TMWW-t	MT20	5.0	6.0	2.50	2.50
D	TTWW+m	MT20	5.0	6.0	2.25	1.50
E	TMW+w	MT20	2.0	4.0		
F	TTWW+m	MT20	5.0	6.0	2.25	1.50
G	TMWW-t	MT20	5.0	6.0	2.50	2.50
H	TMV+p	MT20	3.0	4.0		
J	BMVW1-t	MT20	5.0	6.0		
K	BMWW-t	MT20	4.0	4.0		
L	BS-t	MT20	3.0	6.0		
M	BMWWW-t	MT20	5.0	6.0		
N	BMWW-t	MT20	4.0	4.0		
O	BMVW1-t	MT20	5.0	6.0		

DIMENSIONS, SUPPORTS AND LOADINGS SPECIFIED BY FABRICATOR TO BE VERIFIED BY BUILDING DESIGNER

BEARINGS

JT	FACTORED GROSS REACTION VERT	HORZ	MAXIMUM FACTORED GROSS REACTION DOWN	HORZ	UPLIFT	INPUT BRG IN-SX	REQRD BRG IN-SX
O	2097	0	2097	0	0	5-8	2-4
J	2097	0	2097	0	0	5-8	2-4

UNFACTORED REACTIONS

JT	1ST LCASE COMBINED	MAX./MIN. COMPONENT REACTIONS SNOW	LIVE	PERM.LIVE	WIND	DEAD	SOIL
O	1622	1087 / 0	270 / 0	0 / 0	0 / 0	265 / 0	0 / 0
J	1622	1087 / 0	270 / 0	0 / 0	0 / 0	265 / 0	0 / 0

BEARING MATERIAL TO BE SPF NO.2 OR BETTER AT JOINT(S) O, J

BRACING

TOP CHORD TO BE SHEATHED OR MAX. PURLIN SPACING = 3.96 FT.
MAX. UNBRACED BOTTOM CHORD LENGTH = 10.00 FT. OR RIGID CEILING DIRECTLY APPLIED.

ALL PITCH BREAKS AND PERIMETER CORNER JOINTS MUST BE LATERALLY RESTRAINED.

LOADING

TOTAL LOAD CASES: (4)

CHORDS

MEMB. FR-TO	MAX. FACTORED FORCE (LBS)	FACTORED VERT. LOAD (PLF) FROM	TO	LC1	MAX CSI (LC)	MAX. UNBRAC LENGTH
A- B	0 / 54	-122.2	-122.2	0.17 (1)	10.00	
B- C	0 / 27	-122.2	-122.2	0.19 (1)	10.00	
C- D	-1859 / 0	-122.2	-122.2	0.19 (1)	4.77	
D- E	-1910 / 0	-122.2	-122.2	0.68 (1)	3.96	
E- F	-1910 / 0	-122.2	-122.2	0.68 (1)	3.96	
F- G	-1859 / 0	-122.2	-122.2	0.19 (1)	4.77	
G- H	0 / 27	-122.2	-122.2	0.19 (1)	10.00	
H- I	0 / 54	-122.2	-122.2	0.17 (1)	10.00	
O- B	-325 / 0	0.0	0.0	0.03 (1)	7.81	
J- H	-325 / 0	0.0	0.0	0.03 (1)	7.81	
O- N	0 / 1374	-28.0	-28.0	0.43 (2)	10.00	
N- M	0 / 1405	-28.0	-28.0	0.44 (2)	10.00	
M- L	0 / 1405	-28.0	-28.0	0.44 (2)	10.00	
L- K	0 / 1405	-28.0	-28.0	0.44 (2)	10.00	
K- J	0 / 1374	-28.0	-28.0	0.43 (2)	10.00	

WEBS

MEMB. FR-TO	MAX. FACTORED FORCE (LBS)	MAX CSI (LC)
C- N	0 / 124	0.03 (3)
N- D	0 / 276	0.06 (2)
D- M	0 / 744	0.17 (1)
M- E	-940 / 0	0.82 (1)
M- F	0 / 744	0.17 (1)
K- F	0 / 276	0.06 (2)
K- G	0 / 124	0.03 (3)
O- C	-2183 / 0	0.94 (1)
G- J	-2183 / 0	0.94 (1)

LICENSED PROFESSIONAL ENGINEER
6216
S. KATSOULAKOS
PROVINCE OF ONTARIO

[MI[F]

DESIGN CRITERIA

SPECIFIED LOADS:

TOP	CH.	LL	=	38.3	PSF
		DL	=	3.0	PSF
BOT	CH.	LL	=	10.5	PSF
		DL	=	7.0	PSF
TOTAL	LOAD		=	58.7	PSF

SPACING = 24.0 IN. C/C

LOADING IN FLAT SECTION BASED ON A SLOPE OF 6.00/12

THIS TRUSS IS DESIGNED FOR RESIDENTIAL OR SMALL BUILDING REQUIREMENTS OF PART 9, NBCC 2010

THIS DESIGN COMPLIES WITH:
- PART 9 OF OBC 2012 , BCBC 2012 , ABC 2014
- CSA 086-09
- TPIC 2011

(55 % OF 54.4 P.S.F. G.S.L. PLUS 8.4 P.S.F. RAIN LOAD) EQUALS 38.3 P.S.F. SPECIFIED ROOF LIVE LOAD

ALLOWABLE DEFL.(LL)= L/360 (0.86")
CALCULATED VERT. DEFL.(LL) = L/ 999 (0.09")
ALLOWABLE DEFL.(TL)= L/360 (0.86")
CALCULATED VERT. DEFL.(TL) = L/ 999 (0.14")

CSI: TC=0.68 (D-E:1) , BC=0.44 (M-N:2) , WB=0.94 (C-O:1) , SSI=0.37 (D-E:1)

DOL LUMBER=1.00 NAIL=1.00 LS BEND=1.10 COMP=1.10 SHEAR=1.10 TENS= 1.10

COMPANION LIVE LOAD FACTOR = 0.50

TRUSS PLATE MANUFACTURER IS NOT RESPONSIBLE FOR QUALITY CONTROL IN THE TRUSS MANUFACTURING PLANT .

NAIL VALUES

PLATE	GRIP(DRY) (PSI) MAX	MIN	SHEAR (PLI) MAX	MIN	SECTION (PLI) MAX	MIN
MT20	618	354	1667	822	2284	1656

PLATE PLACEMENT TOL. = 0.250 inches

PLATE ROTATION TOL. = 5.0 Deg.

JSI GRIP= 0.89 (O) (INPUT = 0.90)
JSI METAL= 0.54 (G) (INPUT = 1.00)

DWG NO. TAM 25706 16

STRUCTURAL COMPONENT ONLY

JOB NAME	TRUSS NAME	QUANTITY	PLY	JOB DESC. 42067	DRWG NO.
266140	T14	2	1	TRUSS DESC.	

Tamarack Roof Truss, Burlington

Version 8.000 S Jan 15 2016 MiTek Industries, Inc. Thu Jun 02 08:36:18 2016 Page 1

ID:T410TgzMB153Sw?eGMLZkzAeat-FmSO8LNQpgG4c7I1oXsFClGfwmeWrGoPgHY_ZlzAOGx

Scale: 1/4"=1

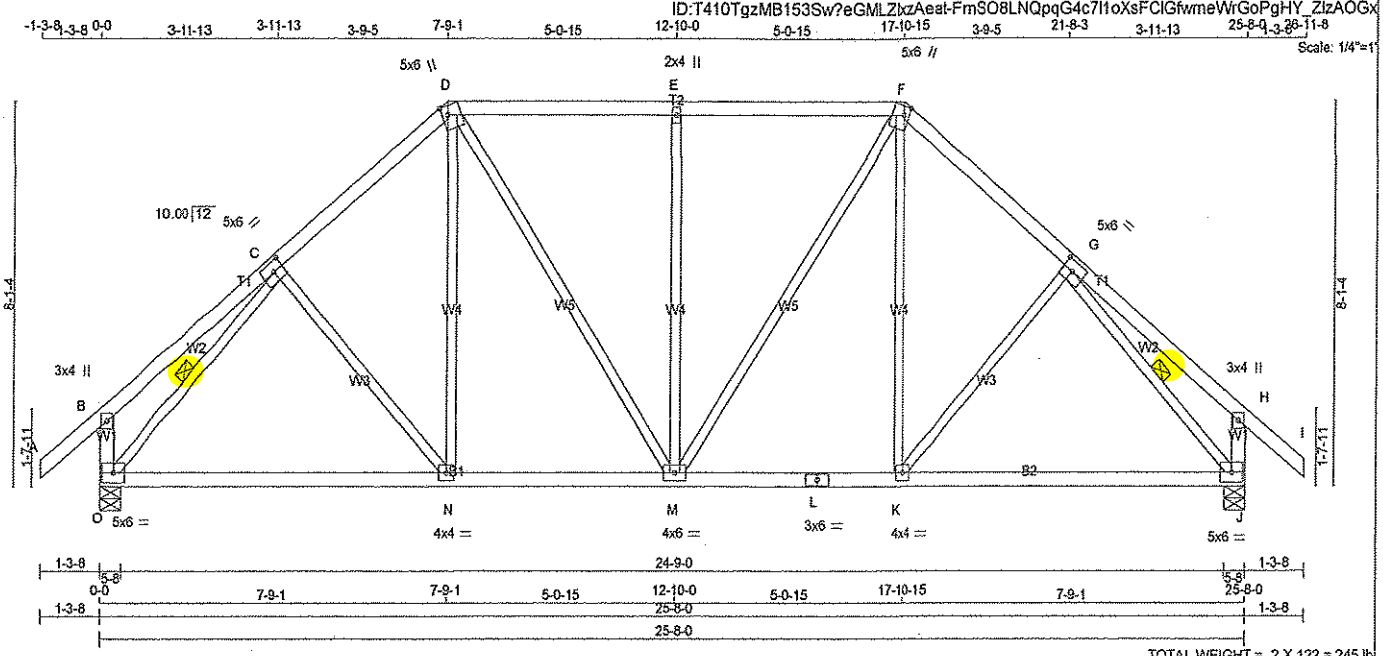

TOTAL WEIGHT = 2 X 122 = 245 lb

LUMBER

N. L. G. A. RULES

CHORDS	SIZE		LUMBER	DESCR.
A - D	2x4	DRY	No.2	SPF
D - F	2x4	DRY	No.2	SPF
F - I	2x4	DRY	No.2	SPF
O - B	2x4	DRY	No.2	SPF
J - H	2x4	DRY	No.2	SPF
O - L	2x4	DRY	No.2	SPF
L - J	2x4	DRY	No.2	SPF
ALL WEBS EXCEPT	2x3	DRY	No.2	SPF

DRY: SEASONED LUMBER.

PLATES (table is in inches)

JT	TYPE	PLATES	W	LEN	Y	X
B	TMV+p	MT20	3.0	4.0		
C	TMWW-t	MT20	5.0	6.0	2.50	2.75
D	TTWW+m	MT20	5.0	6.0	2.25	1.50
E	TMW+w	MT20	2.0	4.0		
F	TTWW+m	MT20	5.0	6.0	2.25	1.50
G	TMWW-t	MT20	5.0	6.0	2.50	2.75
H	TMV+p	MT20	3.0	4.0		
J	BMVW1-t	MT20	5.0	6.0		
K	BMWW-t	MT20	4.0	4.0		
L	BS-t	MT20	3.0	6.0		
M	BMWWW-t	MT20	4.0	6.0		
N	BMWW-t	MT20	4.0	4.0		
O	BMVW1-t	MT20	5.0	6.0		

DIMENSIONS, SUPPORTS AND LOADINGS SPECIFIED BY FABRICATOR TO BE VERIFIED BY BUILDING DESIGNER

BEARINGS

JT	FACTORED GROSS REACTION VERT	HORZ	MAXIMUM FACTORED GROSS REACTION DOWN	HORZ	UPLIFT	INPUT BRG IN-SX	REQRD BRG IN-SX
O	2097	0	2097	0	0	5-8	2-4
J	2097	0	2097	0	0	5-8	2-4

UNFACTORED REACTIONS

JT	1ST LCASE COMBINED	MAX./MIN. COMPONENT REACTIONS SNOW	LIVE	PERM.LIVE	WIND	DEAD	SOIL
O	1622	1087 / 0	270 / 0	0 / 0	0 / 0	265 / 0	0 / 0
J	1622	1087 / 0	270 / 0	0 / 0	0 / 0	265 / 0	0 / 0

BEARING MATERIAL TO BE SPF NO.2 OR BETTER AT JOINT(S) O, J

BRACING

TOP CHORD TO BE SHEATHED OR MAX. PURLIN SPACING = 4.69 FT.
MAX. UNBRACED BOTTOM CHORD LENGTH = 10.00 FT. OR RIGID CEILING DIRECTLY APPLIED.

ALL PITCH BREAKS AND PERIMETER CORNER JOINTS MUST BE LATERALLY RESTRAINED.

1 LATERAL BRACE(S) AT 1/ 2 LENGTH OF C-O, G-J.

END VERTICAL(S) MUST BE SHEATHED OR HAVE BRACES AS INDICATED IN THE MAX. UNBRACED LENGTH COLUMN OF THE TABLE BELOW

LOADING

TOTAL LOAD CASES: (4)

CHORDS

MEMB. FR-TO	MAX. FACTORED FORCE (LBS)	FACTORED VERT. LOAD (PLF) FROM	TO	LC1	MAX CSI (LC)	MAX. UNBRAC LENGTH
A- B	0 / 54	-122.2	-122.2	0.17 (1)	10.00	
B- C	0 / 34	-122.2	-122.2	0.29 (1)	10.00	
C- D	-1805 / 0	-122.2	-122.2	0.26 (1)	4.74	
D- E	-1631 / 0	-122.2	-122.2	0.43 (1)	4.69	
E- F	-1631 / 0	-122.2	-122.2	0.43 (1)	4.69	
F- G	-1805 / 0	-122.2	-122.2	0.26 (1)	4.74	
G- H	0 / 34	-122.2	-122.2	0.29 (1)	10.00	
H- I	0 / 54	-122.2	-122.2	0.17 (1)	10.00	
O- B	-351 / 0	0.0	0.0	0.04 (1)	7.81	
J- H	-351 / 0	0.0	0.0	0.04 (1)	7.81	
O- N	0 / 1413	-28.0	-28.0	0.52 (2)	10.00	
N- M	0 / 1361	-28.0	-28.0	0.52 (2)	10.00	
M- L	0 / 1361	-28.0	-28.0	0.52 (2)	10.00	
L- K	0 / 1361	-28.0	-28.0	0.52 (2)	10.00	
K- J	0 / 1413	-28.0	-28.0	0.52 (2)	10.00	

WEBS

MEMB. FR-TO	MAX. FACTORED FORCE (LBS)	MAX CSI (LC)
C- N	-84 / 97	0.05 (1)
N- D	0 / 367	0.08 (2)
D- M	0 / 496	0.11 (1)
M- E	-755 / 0	0.96 (1)
M- F	0 / 496	0.11 (1)
K- F	0 / 367	0.08 (2)
K- G	-84 / 97	0.05 (1)
O- C	-2176 / 0	0.55 (1)
G- J	-2176 / 0	0.55 (1)

DESIGN CRITERIA

SPECIFIED LOADS:

TOP CH.	LL	=	38.3	PSF
	DL	=	3.0	PSF
BOT CH.	LL	=	10.5	PSF
	DL	=	7.0	PSF
TOTAL LOAD		=	58.7	PSF

SPACING = 24.0 IN. C/C

LOADING IN FLAT SECTION BASED ON A SLOPE OF 6.00/12

THIS TRUSS IS DESIGNED FOR RESIDENTIAL OR SMALL BUILDING REQUIREMENTS OF PART 9, NBCC 2010

THIS DESIGN COMPLIES WITH:
- PART 9 OF OBC 2012 , BCBC 2012 , ABC 2014
- CSA 086-09
- TPIC 2011

(55 % OF 54.4 P.S.F. G.S.L. PLUS 8.4 P.S.F. RAIN LOAD) EQUALS 38.3 P.S.F. SPECIFIED ROOF LIVE LOAD

ALLOWABLE DEFL.(LL)= L/360 (0.86")
CALCULATED VERT. DEFL.(LL) = L/ 999 (0.16")
ALLOWABLE DEFL.(TL)= L/360 (0.86")
CALCULATED VERT. DEFL.(TL) = L/ 999 (0.26")

CSI: TC=0.43 (D-E:1) , BC=0.52 (M-N:2) , WB=0.96 (E-M:1) , SSI=0.30 (D-E:1)

DOL LUMBER=1.00 NAIL=1.00 LS BEND=1.10 COMP=1.10 SHEAR=1.10 TENS= 1.10

COMPANION LIVE LOAD FACTOR = 0.50

TRUSS PLATE MANUFACTURER IS NOT RESPONSIBLE FOR QUALITY CONTROL IN THE TRUSS MANUFACTURING PLANT .

NAIL VALUES

PLATE	GRIP(DRY) (PSI) MAX	MIN	SHEAR (PLI) MAX	MIN	SECTION (PLI) MAX	MIN
MT20	618	354	1667	822	2284	1656

PLATE PLACEMENT TOL. = 0.250 inches

PLATE ROTATION TOL. = 5.0 Deg.

JSI GRIP= 0.90 (G) (INPUT = 0.90)
JSI METAL= 0.54 (C) (INPUT = 1.00)

LICENSED PROFESSIONAL ENGINEER
6216
S. KATSOULAKOS
PROVINCE OF ONTARIO

DWG NO. TAM25707-16
STRUCTURAL
COMPONENT ONLY

JOB NAME	TRUSS NAME	QUANTITY	PLY	JOB DESC. 42067	DRWG NO.
266140	T15	2	1	TRUSS DESC.	

Tamarack Roof Truss, Burlington

Version 8.000 S Jan 15 2016 MiTek Industries, Inc. Thu Jun 02 08:38:19 2016 Page 1

ID:T410TgzMB153Sw?eGMLZlxzAeat-jz0mLhO2a8OxDGKDLENUkyoriA0casZYvxHY6BzAOGw

Scale = 1:51.6

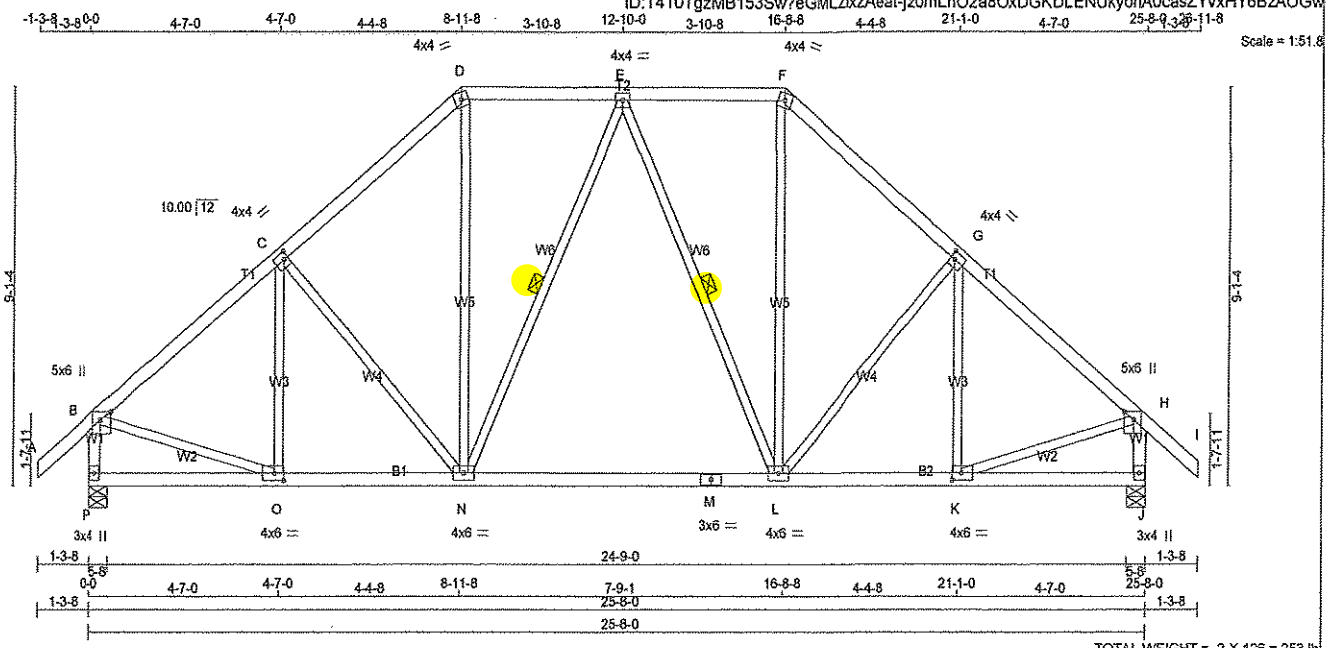

TOTAL WEIGHT = 2 X 126 = 253 lb

[M][F]

LUMBER

N. L. G. A. RULES

CHORDS	SIZE		LUMBER	DESCR.
A - D	2x4	DRY	No.2	SPF
D - F	2x4	DRY	No.2	SPF
F - I	2x4	DRY	No.2	SPF
P - B	2x4	DRY	No.2	SPF
J - H	2x4	DRY	No.2	SPF
P - M	2x4	DRY	No.2	SPF
M - J	2x4	DRY	No.2	SPF
ALL WEBS EXCEPT	2x3	DRY	No.2	SPF

DRY: SEASONED LUMBER.

PLATES (table is in inches)

JT	TYPE	PLATES	W	LEN	Y	X
B	TMWW+p	MT20	5.0	6.0	Edge	2.75
C	TMWW-t	MT20	4.0	4.0	2.00	1.25
D	TTW-m	MT20	4.0	4.0		
E	TMWW-t	MT20	4.0	4.0		
F	TTW-m	MT20	4.0	4.0		
G	TMWW-t	MT20	4.0	4.0	2.00	1.25
H	TMWW+p	MT20	5.0	6.0	Edge	2.75
J	BMV1+p	MT20	3.0	4.0		
K	BMWW-t	MT20	4.0	6.0	2.00	2.75
L	BMWWW-t	MT20	4.0	6.0		
M	BS-t	MT20	3.0	6.0		
N	BMWWW-t	MT20	4.0	6.0		
O	BMWW-t	MT20	4.0	6.0	2.00	2.75
P	BMV1+p	MT20	3.0	4.0		

Edge - INDICATES REFERENCE CORNER OF PLATE TOUCHES EDGE OF CHORD.

DIMENSIONS, SUPPORTS AND LOADINGS SPECIFIED BY FABRICATOR TO BE VERIFIED BY BUILDING DESIGNER

BEARINGS

JT	FACTORED GROSS REACTION VERT	HORZ	MAXIMUM FACTORED GROSS REACTION DOWN	HORZ	UPLIFT	INPUT BRG IN-SX	REQRD BRG IN-SX
P	2097	0	2097	0	0	5-8	3-5
J	2097	0	2097	0	0	5-8	3-5

UNFACTORED REACTIONS

JT	1ST LCASE COMBINED	MAX./MIN. COMPONENT REACTIONS SNOW	LIVE	PERM.LIVE	WIND	DEAD	SOIL
P	1622	1087 / 0	270 / 0	0 / 0	0 / 0	265 / 0	0 / 0
J	1622	1087 / 0	270 / 0	0 / 0	0 / 0	265 / 0	0 / 0

BEARING MATERIAL TO BE SPF NO.2 OR BETTER AT JOINT(S) P, J

BRACING

TOP CHORD TO BE SHEATHED OR MAX. PURLIN SPACING = 4.53 FT.
MAX. UNBRACED BOTTOM CHORD LENGTH = 10.00 FT. OR RIGID CEILING DIRECTLY APPLIED.

ALL PITCH BREAKS AND PERIMETER CORNER JOINTS MUST BE LATERALLY RESTRAINED.

1 LATERAL BRACE(S) AT 1/ 2 LENGTH OF E-N, E-L.

END VERTICAL(S) MUST BE SHEATHED OR HAVE BRACES AS INDICATED IN THE MAX. UNBRACED LENGTH COLUMN OF THE TABLE BELOW

LOADING

TOTAL LOAD CASES: (4)

CHORDS

MEMB. FR-TO	MAX. FACTORED FORCE (LBS)	FACTORED VERT. LOAD LC1 (PLF) FROM	TO	MAX CSI (LC)	MAX. UNBRAC LENGTH
A- B	0 / 54	-122.2	-122.2	0.17 (1)	10.00
B- C	-1884 / 0	-122.2	-122.2	0.37 (1)	4.53
C- D	-1722 / 0	-122.2	-122.2	0.35 (1)	4.71
D- E	-1295 / 0	-122.2	-122.2	0.24 (1)	5.41
E- F	-1295 / 0	-122.2	-122.2	0.24 (1)	5.41
F- G	-1722 / 0	-122.2	-122.2	0.35 (1)	4.71
G- H	-1884 / 0	-122.2	-122.2	0.37 (1)	4.53
H- I	0 / 54	-122.2	-122.2	0.17 (1)	10.00
P- B	-2039 / 0	0.0	0.0	0.22 (1)	5.92
J- H	-2039 / 0	0.0	0.0	0.22 (1)	5.92
P- O	0 / 0	-28.0	-28.0	0.13 (2)	10.00
O- N	0 / 1479	-28.0	-28.0	0.41 (2)	10.00
N- M	0 / 1417	-28.0	-28.0	0.40 (2)	10.00
M- L	0 / 1417	-28.0	-28.0	0.40 (2)	10.00
L- K	0 / 1479	-28.0	-28.0	0.41 (2)	10.00
K- J	0 / 0	-28.0	-28.0	0.13 (2)	10.00

WEBS

MEMB. FR-TO	MAX. FACTORED FORCE (LBS)	MAX CSI (LC)
O- C	-305 / 55	0.14 (1)
C- N	-291 / 0	0.25 (1)
N- D	0 / 688	0.15 (1)
N- E	-308 / 0	0.20 (1)
E- L	-308 / 0	0.20 (1)
L- F	0 / 688	0.15 (1)
L- G	-291 / 0	0.25 (1)
K- G	-305 / 55	0.14 (1)
B- O	0 / 1538	0.35 (1)
K- H	0 / 1538	0.35 (1)

DESIGN CRITERIA

SPECIFIED LOADS:

TOP CH.	LL	=	38.3	PSF
	DL	=	3.0	PSF
BOT CH.	LL	=	10.5	PSF
	DL	=	7.0	PSF
TOTAL LOAD		=	58.7	PSF

SPACING = 24.0 IN. C/C

LOADING IN FLAT SECTION BASED ON A SLOPE OF 6.00/12

THIS TRUSS IS DESIGNED FOR RESIDENTIAL OR SMALL BUILDING REQUIREMENTS OF PART 9, NBCC 2010

THIS DESIGN COMPLIES WITH:
- PART 9 OF OBC 2012 , BCBC 2012 , ABC 2014
- CSA 086-09
- TPIC 2011

(55 % OF 54.4 P.S.F. G.S.L. PLUS 8.4 P.S.F. RAIN LOAD) EQUALS 38.3 P.S.F. SPECIFIED ROOF LIVE LOAD

ALLOWABLE DEFL.(LL)= L/360 (0.86")
CALCULATED VERT. DEFL.(LL) = L/ 999 (0.11")
ALLOWABLE DEFL.(TL)= L/360 (0.86")
CALCULATED VERT. DEFL.(TL) = L/ 999 (0.19")

CSI: TC=0.37 (B-C:1) , BC=0.41 (N-O:2) , WB=0.35 (B-O:1) , SSI=0.23 (E-F:1)

DOL LUMBER=1.00 NAIL=1.00 LS BEND=1.10 COMP=1.10 SHEAR=1.10 TENS= 1.10

COMPANION LIVE LOAD FACTOR = 0.50

TRUSS PLATE MANUFACTURER IS NOT RESPONSIBLE FOR QUALITY CONTROL IN THE TRUSS MANUFACTURING PLANT .

NAIL VALUES

PLATE	GRIP(DRY) (PSI) MAX	MIN	SHEAR (PLI) MAX	MIN	SECTION (PLI) MAX	MIN
MT20	618	354	1667	822	2284	1656

PLATE PLACEMENT TOL. = 0.250 inches

PLATE ROTATION TOL. = 5.0 Deg.

JSI GRIP= 0.89 (H) (INPUT = 0.90)
JSI METAL= 0.42 (M) (INPUT = 1.00)

LICENSED PROFESSIONAL ENGINEER
6216
S. KATSOULAKOS
PROVINCE OF ONTARIO

DWG NO. TAM 25708.16
STRUCTURAL
COMPONENT ONLY

JOB NAME	TRUSS NAME	QUANTITY	PLY	JOB DESC. 42067	DRWG NO.
266140	T16	3	1	TRUSS DESC.	

Tamarack Roof Truss, Burlington

Version 8.000 S Jan 15 2016 MiTek Industries, Inc. Thu Jun 02 08:36:19 2016 Page 1

ID:T410TgzMB153Sw?eGMLZbzAeat-jz0mLhO2a8OxDGKDLENUkyopxA1raqGYvxHY6BzAOGw

Scale = 1:58.1

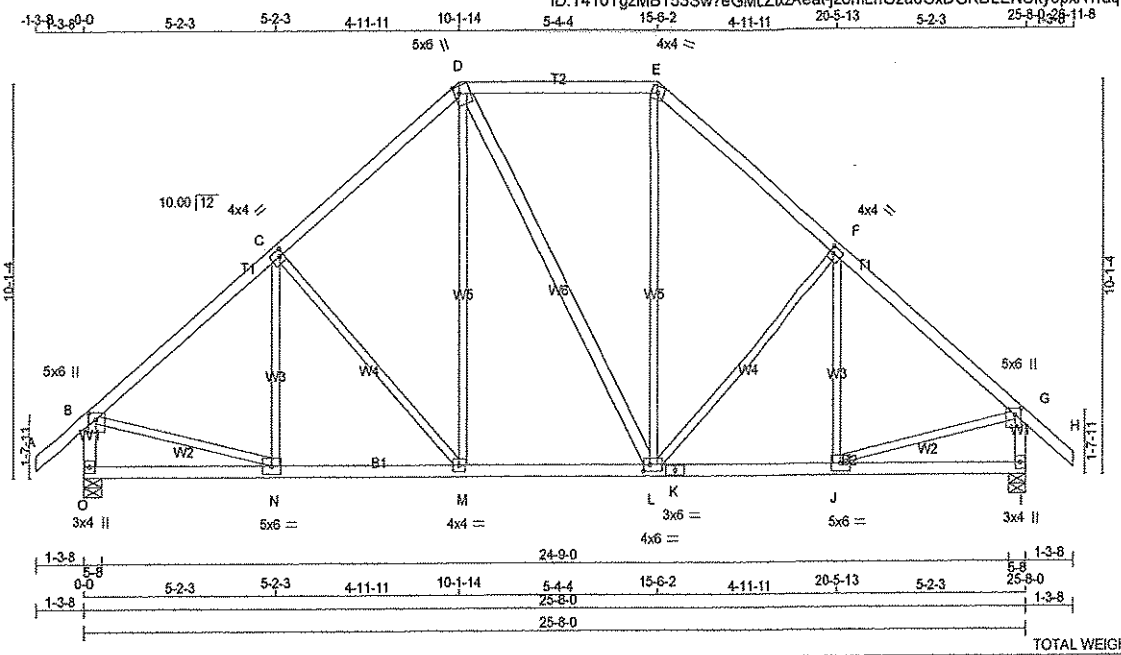

TOTAL WEIGHT = 3 X 129 = 387 lb

[M][F]

LUMBER

N. L. G. A. RULES

CHORDS	SIZE		LUMBER	DESCR.
A - D	2x4	DRY	No.2	SPF
D - E	2x4	DRY	No.2	SPF
E - H	2x4	DRY	No.2	SPF
O - B	2x4	DRY	No.2	SPF
I - G	2x4	DRY	No.2	SPF
O - K	2x4	DRY	No.2	SPF
K - I	2x4	DRY	No.2	SPF
ALL WEBS	2x3	DRY	No.2	SPF
EXCEPT				
D - L	2x4	DRY	No.2	SPF

DRY: SEASONED LUMBER.

PLATES (table is in inches)

JT	TYPE	PLATES	W	LEN	Y	X
B	TMVW+p	MT20	5.0	6.0	2.00	2.00
C	TMWW-t	MT20	4.0	4.0	2.00	1.25
D	TTWW+m	MT20	5.0	6.0	2.25	1.50
E	TTW-m	MT20	4.0	4.0		
F	TMWW-t	MT20	4.0	4.0	2.00	1.25
G	TMVW+p	MT20	5.0	6.0	2.00	2.00
I	BMV1+p	MT20	3.0	4.0		
J	BMWW-t	MT20	5.0	6.0		
K	BS-t	MT20	3.0	6.0		
L	BMWWW-t	MT20	4.0	6.0	2.00	2.00
M	BMWW-t	MT20	4.0	4.0		
N	BMWW-t	MT20	5.0	6.0		
O	BMV1+p	MT20	3.0	4.0		

DIMENSIONS, SUPPORTS AND LOADINGS SPECIFIED BY FABRICATOR TO BE VERIFIED BY BUILDING DESIGNER

BEARINGS

JT	FACTORED GROSS REACTION VERT	HORZ	MAXIMUM FACTORED GROSS REACTION DOWN	HORZ	UPLIFT	INPUT BRG IN-SX	REQRD BRG IN-SX
O	2097	0	2097	0	0	5-8	3-5
I	2097	0	2097	0	0	5-8	3-5

UNFACTORED REACTIONS

JT	1ST LCASE COMBINED	MAX./MIN. COMPONENT REACTIONS SNOW	LIVE	PERM.LIVE	WIND	DEAD	SOIL
O	1622	1087 / 0	270 / 0	0 / 0	0 / 0	265 / 0	0 / 0
I	1622	1087 / 0	270 / 0	0 / 0	0 / 0	265 / 0	0 / 0

BEARING MATERIAL TO BE SPF NO.2 OR BETTER AT JOINT(S) O, I

BRACING

TOP CHORD TO BE SHEATHED OR MAX. PURLIN SPACING = 4.38 FT.
MAX. UNBRACED BOTTOM CHORD LENGTH = 10.00 FT. OR RIGID CEILING DIRECTLY APPLIED.

ALL PITCH BREAKS AND PERIMETER CORNER JOINTS MUST BE LATERALLY RESTRAINED.

LOADING

TOTAL LOAD CASES: (4)

CHORDS

MEMB. FR-TO	MAX. FACTORED FORCE (LBS)	FACTORED VERT. LOAD (PLF) FROM	TO	LC1	MAX CSI (LC)	MAX. UNBRAC LENGTH
A- B	0 / 54	-122.2	-122.2	0.17 (1)		10.00
B- C	-1901 / 0	-122.2	-122.2	0.48 (1)		4.38
C- D	-1627 / 0	-122.2	-122.2	0.45 (1)		4.68
D- E	-1215 / 0	-122.2	-122.2	0.47 (1)		5.19
E- F	-1628 / 0	-122.2	-122.2	0.45 (1)		4.68
F- G	-1901 / 0	-122.2	-122.2	0.48 (1)		4.38
G- H	0 / 54	-122.2	-122.2	0.17 (1)		10.00
O- B	-2037 / 0	0.0	0.0	0.22 (1)		5.92
I- G	-2036 / 0	0.0	0.0	0.22 (1)		5.92
O- N	0 / 0	-28.0	-28.0	0.18 (3)		10.00
N- M	0 / 1497	-28.0	-28.0	0.33 (1)		10.00
M- L	0 / 1215	-28.0	-28.0	0.28 (1)		10.00
L- K	0 / 1496	-28.0	-28.0	0.32 (1)		10.00
K- J	0 / 1496	-28.0	-28.0	0.32 (1)		10.00
J- I	0 / 0	-28.0	-28.0	0.17 (3)		10.00

WEBS

MEMB. FR-TO	MAX. FACTORED FORCE (LBS)	MAX CSI (LC)
N- C	-219 / 142	0.12 (1)
C- M	-428 / 0	0.49 (1)
M- D	0 / 457	0.10 (1)
D- L	0 / 2	0.00 (1)
L- E	0 / 460	0.10 (1)
L- F	-426 / 0	0.49 (1)
J- F	-221 / 140	0.12 (1)
B- N	0 / 1543	0.35 (1)
J- G	0 / 1543	0.35 (1)

DESIGN CRITERIA

SPECIFIED LOADS:

TOP CH.	LL	=	38.3	PSF
	DL	=	3.0	PSF
BOT CH.	LL	=	10.5	PSF
	DL	=	7.0	PSF
TOTAL LOAD		=	58.7	PSF

SPACING = 24.0 IN. C/C

LOADING IN FLAT SECTION BASED ON A SLOPE OF 6.00/12

THIS TRUSS IS DESIGNED FOR RESIDENTIAL OR SMALL BUILDING REQUIREMENTS OF PART 9, NBCC 2010

THIS DESIGN COMPLIES WITH:
- PART 9 OF OBC 2012 , BCBC 2012 , ABC 2014
- CSA 086-09
- TPIC 2011

(55 % OF 54.4 P.S.F. G.S.L. PLUS 8.4 P.S.F. RAIN LOAD) EQUALS 38.3 P.S.F. SPECIFIED ROOF LIVE LOAD

ALLOWABLE DEFL.(LL)= L/360 (0.86")
CALCULATED VERT. DEFL.(LL) = L/ 999 (0.07")
ALLOWABLE DEFL.(TL)= L/360 (0.86")
CALCULATED VERT. DEFL.(TL) = L/ 999 (0.10")

CSI: TC=0.48 (B-C:1) , BC=0.33 (M-N:1) , WB=0.49 (C-M:1) , SSI=0.26 (D-E:1)

DOL LUMBER=1.00 NAIL=1.00 LS BEND=1.10 COMP=1.10 SHEAR=1.10 TENS= 1.10

COMPANION LIVE LOAD FACTOR = 0.50

TRUSS PLATE MANUFACTURER IS NOT RESPONSIBLE FOR QUALITY CONTROL IN THE TRUSS MANUFACTURING PLANT .

NAIL VALUES

PLATE	GRIP(DRY) (PSI) MAX	MIN	SHEAR (PLI) MAX	MIN	SECTION (PLI) MAX	MIN
MT20	618	354	1667	822	2284	1656

PLATE PLACEMENT TOL. = 0.250 inches

PLATE ROTATION TOL. = 5.0 Deg.

SI GRIP= 0.89 (B) (INPUT = 0.90)
SI METAL= 0.43 (B) (INPUT = 1.00)

LICENSED PROFESSIONAL ENGINEER
S. KATSOULAKOS
PROVINCE OF ONTARIO

DWG NO. TAM25709-16
STRUCTURAL
COMPONENT ONLY

JOB NAME	TRUSS NAME	QUANTITY	PLY	JOB DESC. 42067	DRWG NO.
272252	T17	3	1	TRUSS DESC.	

Tamarack Roof Truss, Burlington

Version 8.000 S Jan 15 2016 MiTek Industries, Inc. Tue Aug 23 04:45:29 2016 Page 1

ID:rMfbEJ_R5u6XmdIRC13avWymE9I-?Z?MC?iRbA3MfY?dcd_ZPNa4fRMqmHer0MCOoKyl4tK

Scale = 1:33.7

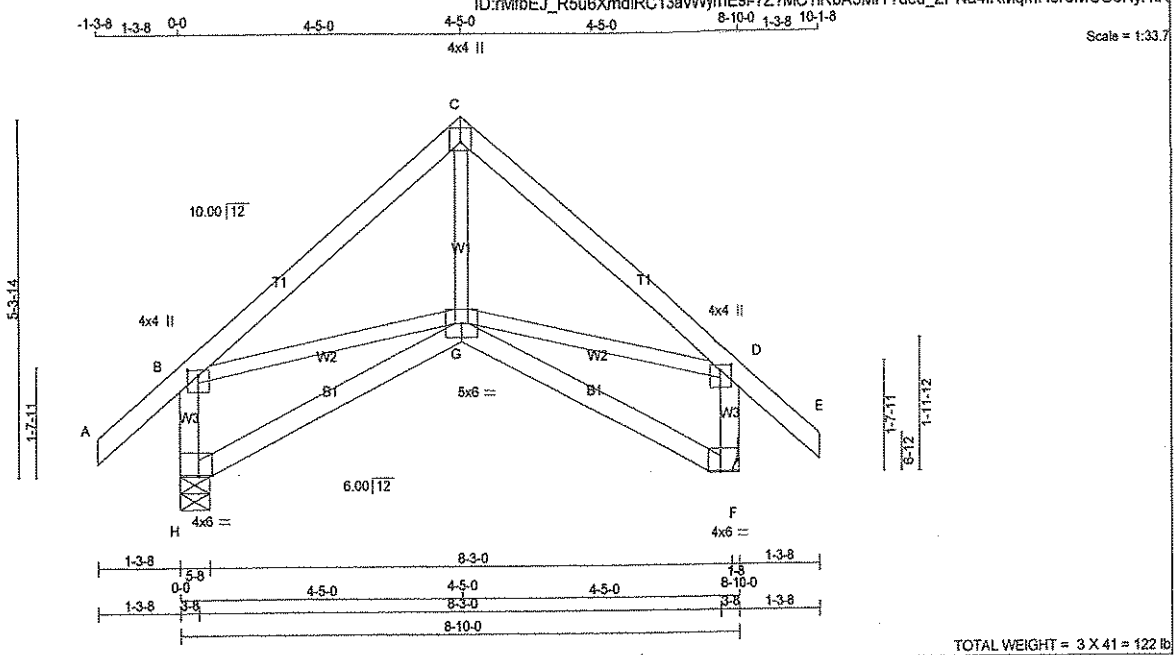

TOTAL WEIGHT = 3 X 41 = 122 lb

[M][F]

LUMBER

N. L. G. A. RULES

CHORDS	SIZE		LUMBER	DESCR.
A - C	2x4	DRY	No.2	SPF
C - E	2x4	DRY	No.2	SPF
H - B	2x4	DRY	No.2	SPF
F - D	2x4	DRY	No.2	SPF
H - G	2x4	DRY	No.2	SPF
G - F	2x4	DRY	No.2	SPF
ALL WEBS EXCEPT	2x3	DRY	No.2	SPF

DRY: SEASONED LUMBER.

PLATES (table is in inches)

JT	TYPE	PLATES	W	LEN	Y	X
B	TMVW+p	MT20	4.0	4.0	1.00	2.00
C	TTW+p	MT20	4.0	4.0	1.50	2.00
D	TMVW+p	MT20	4.0	4.0	1.00	2.00
F	BVM1-p	MT20	4.0	6.0	Edge	2.50
G	BBWWW-p	MT20	5.0	6.0		
H	BVM1-p	MT20	4.0	6.0	Edge	2.50

Edge - INDICATES REFERENCE CORNER OF PLATE TOUCHES EDGE OF CHORD.

DIMENSIONS, SUPPORTS AND LOADINGS SPECIFIED BY FABRICATOR TO BE VERIFIED BY BUILDING DESIGNER

BEARINGS

JT	FACTORED GROSS REACTION VERT	HORZ	MAXIMUM FACTORED GROSS REACTION DOWN	HORZ	UPLIFT	INPUT BRG IN-SX	REQRD BRG IN-SX
H	833	0	833	0	0	5-8	1-8
F	833	0	833	0	0	HANGER BY OTHERS	
						MIN. SEAT SIZE: 1-8	

UNFACTORED REACTIONS

JT	1ST LCASE COMBINED	MAX /MIN. COMPONENT REACTIONS SNOW	LIVE	PERM.LIVE	WIND	DEAD	SOIL
H	633	444 / 0	93 / 0	0 / 0	0 / 0	97 / 0	0 / 0
F	633	444 / 0	93 / 0	0 / 0	0 / 0	97 / 0	0 / 0

BEARING MATERIAL TO BE SPF NO.2 OR BETTER AT JOINT(S) H

BRACING

TOP CHORD TO BE SHEATHED OR MAX. PURLIN SPACING = 6.25 FT.
MAX. UNBRACED BOTTOM CHORD LENGTH = 10.00 FT. OR RIGID CEILING DIRECTLY APPLIED.

ALL PITCH BREAKS AND PERIMETER CORNER JOINTS MUST BE LATERALLY RESTRAINED.

LOADING

TOTAL LOAD CASES: (4)

CHORDS

MEMB. FR-TO	MAX. FORCE (LBS)	FACTORED VERT. LOAD (PLF) FROM	TO	LC1	MAX CSI (LC)	MAX. UNBRAC LENGTH
A- B	0 / 54	-122.2	-122.2	0.17 (1)	10.00	
B- C	-638 / 0	-122.2	-122.2	0.31 (1)	6.25	
C- D	-638 / 0	-122.2	-122.2	0.31 (1)	6.25	
D- E	0 / 54	-122.2	-122.2	0.17 (1)	10.00	
H- B	-771 / 0	0.0	0.0	0.09 (1)	7.81	
F- D	-771 / 0	0.0	0.0	0.09 (1)	7.81	
H- G	0 / 0	-28.0	-28.0	0.16 (3)	10.00	
G- F	0 / 0	-28.0	-28.0	0.16 (3)	10.00	

WEBS

MEMB. FR-TO	MAX. FORCE (LBS)	MAX CSI (LC)
G- C	0 / 313	0.07 (2)
B- G	0 / 496	0.11 (1)
G- D	0 / 496	0.11 (1)

DESIGN CRITERIA

SPECIFIED LOADS:

TOP CH.	LL	=	38.3	PSF
	DL	=	3.0	PSF
BOT CH.	LL	=	10.5	PSF
	DL	=	7.0	PSF
TOTAL LOAD		=	58.7	PSF

SPACING = 24.0 IN. C/C

THIS TRUSS IS DESIGNED FOR RESIDENTIAL OR SMALL BUILDING REQUIREMENTS OF PART 9, NBCC 2010

THIS DESIGN COMPLIES WITH:
- PART 9 OF OBC 2012 , BCBC 2012 , ABC 2014
- CSA 086-09
- TPIC 2011

(55 % OF 54.4 P.S.F. G.S.L. PLUS 8.4 P.S.F. RAIN LOAD) EQUALS 38.3 P.S.F. SPECIFIED ROOF LIVE LOAD

ALLOWABLE DEFL.(LL)= L/360 (0.29")
CALCULATED VERT. DEFL.(LL) = L/ 999 (0.03")
ALLOWABLE DEFL.(TL)= L/360 (0.29")
CALCULATED VERT. DEFL.(TL) = L/ 999 (0.05")

CSI: TC=0.31 (B-C:1) , BC=0.16 (G-H:3) , WB=0.11 (D-G:1) , SSI=0.16 (B-C:1)

DOL LUMBER=1.00 NAIL=1.00 LS BEND=1.10 COMP=1.10 SHEAR=1.10 TENS= 1.10

COMPANION LIVE LOAD FACTOR = 0.50

AUTOSOLVE HEELS OFF

TRUSS PLATE MANUFACTURER IS NOT RESPONSIBLE FOR QUALITY CONTROL IN THE TRUSS MANUFACTURING PLANT .

NAIL VALUES

PLATE	GRIP(DRY) (PSI) MAX	MIN	SHEAR (PLI) MAX	MIN	SECTION (PLI) MAX	MIN
MT20	618	354	1667	822	2284	1656

PLATE PLACEMENT TOL. = 0.250 inches

PLATE ROTATION TOL. = 5.0 Deg.

JSI GRIP= 0.88 (B) (INPUT = 0.90)
JSI METAL= 0.25 (H) (INPUT = 1.00)

LICENSED PROFESSIONAL ENGINEER
82316
S. KATSOULAKOS
PROVINCE OF ONTARIO

DWG NO. TAM38463-16
STRUCTURAL
COMPONENT ONLY

JOB NAME	TRUSS NAME	QUANTITY	PLY	JOB DESC. 42087	DRWG NO.
266140	T18	1	1	TRUSS DESC.	

Tamarack Roof Truss, Burlington

Version 8.000 S Jan 15 2016 MiTek Industries, Inc. Thu Jun 02 08:36:20 2016 Page 1

ID:T410TgzMB153Sw?eGMLZIxzAeat-B9a8Z1PgLRWorQuPvyujHAL_9aHcJIxi8b15eezAOGv

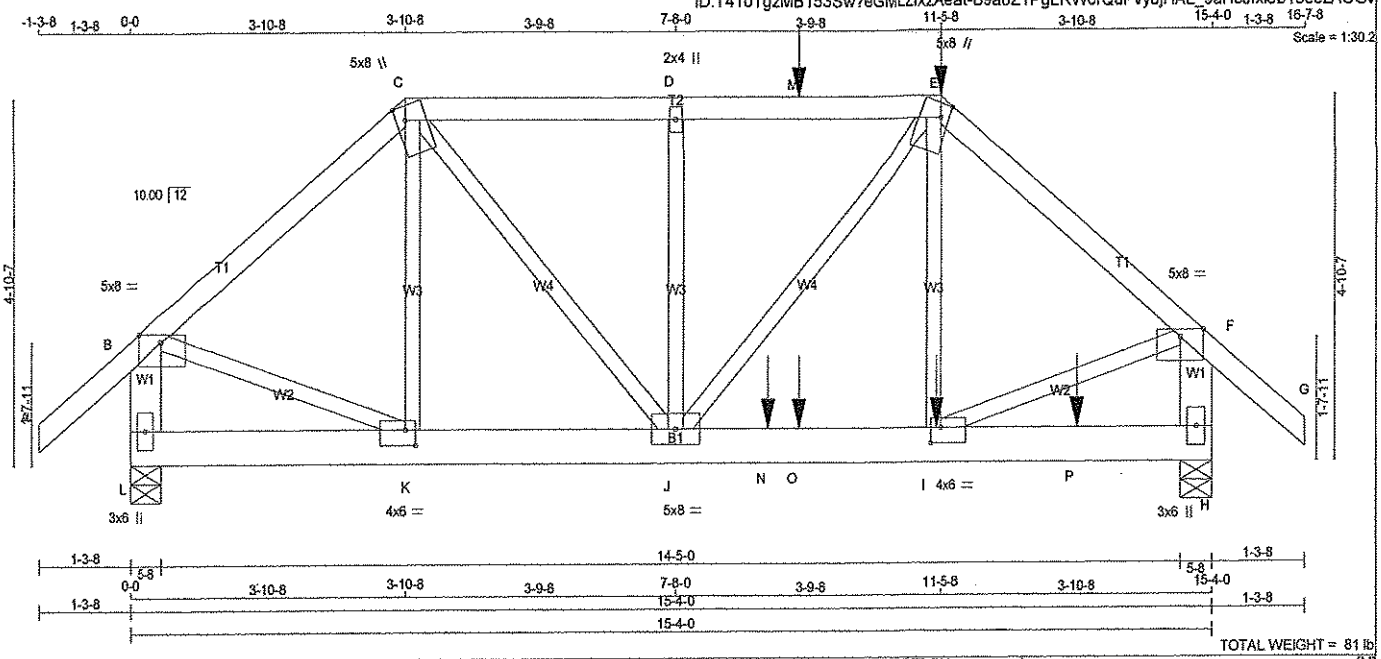

LUMBER

N. L. G. A. RULES

CHORDS	SIZE		LUMBER	DESCR.
A - C	2x4	DRY	No.2	SPF
C - E	2x4	DRY	No.2	SPF
E - G	2x4	DRY	No.2	SPF
L - B	2x6	DRY	No.2	SPF
H - F	2x6	DRY	No.2	SPF
L - H	2x6	DRY	No.2	SPF
ALL WEBS EXCEPT	2x3	DRY	No.2	SPF

DRY: SEASONED LUMBER.

PLATES (table is in inches)

JT	TYPE	PLATES	W	LEN	Y	X
B	TMVW-p	MT20	5.0	8.0	Edge	
C	TTWW+m	MT20	5.0	8.0	2.25	1.50
D	TMW+w	MT20	2.0	4.0		
E	TTWW+m	MT20	5.0	8.0	2.25	1.50
F	TMVW-p	MT20	5.0	8.0	Edge	
H	BMV1+p	MT20	3.0	6.0		
I	BMWW-t	MT20	4.0	6.0	2.50	1.75
J	BMWWW-t	MT20	5.0	8.0		
K	BMWW-t	MT20	4.0	6.0	2.50	1.75
L	BMV1+p	MT20	3.0	6.0		

Edge - INDICATES REFERENCE CORNER OF PLATE TOUCHES EDGE OF CHORD.

HANGERS NOTES

1) SPECIAL HANGER(S) OR CONNECTION(S) REQUIRED TO SUPPORT CONCENTRATED LOAD(S) 114.6 lbs FACTORED DOWN AT 9-4-12, AND 118.1 lbs FACTORED DOWN AT 11-5-8 ON TOP CHORD, AND 1121.7 lbs FACTORED DOWN AT 8-11-8, 42.0 lbs FACTORED DOWN AT 9-4-12, AND 42.0 lbs FACTORED DOWN AT 11-4-12, AND 42.0 lbs FACTORED DOWN AT 13-4-12 ON BOTTOM CHORD. DESIGN FOR UNSPECIFIED CONNECTION(S) IS DELEGATED TO THE BUILDING DESIGNER.

DIMENSIONS, SUPPORTS AND LOADINGS SPECIFIED BY FABRICATOR TO BE VERIFIED BY BUILDING DESIGNER

BEARINGS

JT	FACTORED GROSS REACTION VERT	HORZ	MAXIMUM FACTORED GROSS REACTION DOWN	HORZ	UPLIFT	INPUT BRG IN-SX	REQRD BRG IN-SX
L	1880	0	1880	0	0	5-8	2-1
H	2188	0	2188	0	0	5-8	2-6

UNFACTORED REACTIONS

JT	1ST LCASE COMBINED	MAX./MIN. COMPONENT REACTIONS SNOW	LIVE	PERM.LIVE	WIND	DEAD	SOIL
L	1434	996 / 0	215 / 0	0 / 0	0 / 0	223 / 0	0 / 0
H	1675	1152 / 0	258 / 0	0 / 0	0 / 0	265 / 0	0 / 0

BEARING MATERIAL TO BE SPF NO.2 OR BETTER AT JOINT(S) L, H

BRACING

TOP CHORD TO BE SHEATHED OR MAX. PURLIN SPACING = 4.21 FT.
MAX. UNBRACED BOTTOM CHORD LENGTH = 10.00 FT. OR RIGID CEILING DIRECTLY APPLIED.

ALL PITCH BREAKS AND PERIMETER CORNER JOINTS MUST BE LATERALLY RESTRAINED.

LOADING

TOTAL LOAD CASES: (4)

CHORDS

MEMB. FR-TO	MAX. FACTORED FORCE (LBS)	FACTORED VERT. LOAD (PLF) FROM	TO	LC1	MAX CSI (LC)	MAX. UNBRAC LENGTH
A- B	0 / 54	-122.2	-122.2	0.19 (1)	10.00	
B- C	-1610 / 0	-122.2	-122.2	0.41 (1)	4.69	
C- D	-2048 / 0	-122.2	-122.2	0.42 (1)	4.21	
D- M	-2048 / 0	-122.2	-122.2	0.42 (1)	4.21	
M- E	-2048 / 0	-122.2	-122.2	0.42 (1)	4.21	
E- F	-2027 / 0	-122.2	-122.2	0.45 (1)	4.23	
F- G	0 / 54	-122.2	-122.2	0.19 (1)	10.00	
L- B	-1820 / 0	0.0	0.0	0.13 (1)	7.37	
H- F	-2185 / 0	0.0	0.0	0.16 (1)	6.87	
L- K	0 / 0	-28.0	-28.0	0.06 (2)	10.00	
K- J	0 / 1225	-28.0	-28.0	0.36 (1)	10.00	
J- N	0 / 1556	-28.0	-28.0	0.74 (1)	10.00	
N- O	0 / 1556	-28.0	-28.0	0.74 (1)	10.00	
O- I	0 / 1556	-28.0	-28.0	0.74 (1)	10.00	
I- P	0 / 0	-28.0	-28.0	0.19 (1)	10.00	
P- H	0 / 0	-28.0	-28.0	0.19 (1)	10.00	

WEBS

MEMB. FR-TO	MAX. FACTORED FORCE (LBS)	MAX CSI (LC)
K- C	-356 / 50	0.12 (1)
C- J	0 / 1273	0.32 (1)
J- D	-623 / 0	0.21 (1)
J- E	0 / 762	0.19 (1)
I- E	0 / 249	0.06 (3)
B- K	0 / 1290	0.32 (1)
I- F	0 / 1624	0.40 (1)

FACTORED CONCENTRATED LOADS (LBS)

JT	LOC.	LC1	MAX-	MAX+	FACE	DIR.	TYPE
E	11-5-8	-118	-118	---	BACK	VERT	TOTAL
I	11-4-12	-24	-42	---	BACK	VERT	TOTAL
M	9-4-12	-115	-115	---	BACK	VERT	TOTAL
N	8-11-8	-1122	-1122	---	BACK	VERT	TOTAL
O	9-4-12	-24	-42	---	BACK	VERT	TOTAL
P	13-4-12	-24	-42	---	BACK	VERT	TOTAL

DESIGN CRITERIA

SPECIFIED LOADS:

TOP CH.	LL	=	38.3	PSF
	DL	=	3.0	PSF
BOT CH.	LL	=	10.5	PSF
	DL	=	7.0	PSF
TOTAL LOAD		=	58.7	PSF

SPACING = 24.0 IN. C/C

LOADING IN FLAT SECTION BASED ON A SLOPE OF 6.00/12

THIS TRUSS IS DESIGNED FOR RESIDENTIAL OR SMALL BUILDING REQUIREMENTS OF PART 9, NBCC 2010

THIS DESIGN COMPLIES WITH:
- PART 9 OF OBC 2012 , BCBC 2012 , ABC 2014
- CSA 086-09
- TPIC 2011

(55 % OF 54.4 P.S.F. G.S.L. PLUS 8.4 P.S.F. RAIN LOAD) EQUALS 38.3 P.S.F. SPECIFIED ROOF LIVE LOAD

ALLOWABLE DEFL.(LL)= L/360 (0.51")
CALCULATED VERT. DEFL.(LL) = L/ 999 (0.06")
ALLOWABLE DEFL.(TL)= L/360 (0.51")
CALCULATED VERT. DEFL.(TL) = L/ 999 (0.10")

CSI: TC=0.45 (E-F:1) , BC=0.74 (I-J:1) , WB=0.40 (F-I:1) , SSI=0.53 (I-J:1)

DOL LUMBER=1.00 NAIL=1.00 LS BEND=1.00 COMP=1.00 SHEAR=1.00 TENS= 1.00

COMPANION LIVE LOAD FACTOR = 0.50

AUTOSOLVE HEELS OFF

TRUSS PLATE MANUFACTURER IS NOT RESPONSIBLE FOR QUALITY CONTROL IN THE TRUSS MANUFACTURING PLANT .

NAIL VALUES

PLATE	GRIP(DRY) (PSI) MAX	MIN	SHEAR (PLI) MAX	MIN	SECTION (PLI) MAX	MIN
MT20	618	354	1667	822	2284	1656

PLATE PLACEMENT TOL. = 0.250 inches

PLATE ROTATION TOL. = 5.0 Deg.

JSI GRIP= 0.87 (C) (INPUT = 0.90)
JSI METAL= 0.39 (K) (INPUT = 1.00)

LICENSED PROFESSIONAL ENGINEER
S. KATSOULAKOS
PROVINCE OF ONTARIO

DWG NO. TAM25711-16
STRUCTURAL COMPONENT ONLY

JOB NAME	TRUSS NAME	QUANTITY	PLY	JOB DESC. 42067	DRWG NO.
266140	T19	1	1	TRUSS DESC.	

Tamarack Roof Truss, Burlington

Version 8.000 S Jan 15 2016 MiTek Industries, Inc. Thu Jun 02 08:36:20 2016 Page 1

ID:T410TgzMB153Sw?eGMLZbzAeat-B9a8Z1PgLRWorQuPvyujHAL2yaOmJIXi8b15eezAOGv

Scale = 1:37.7

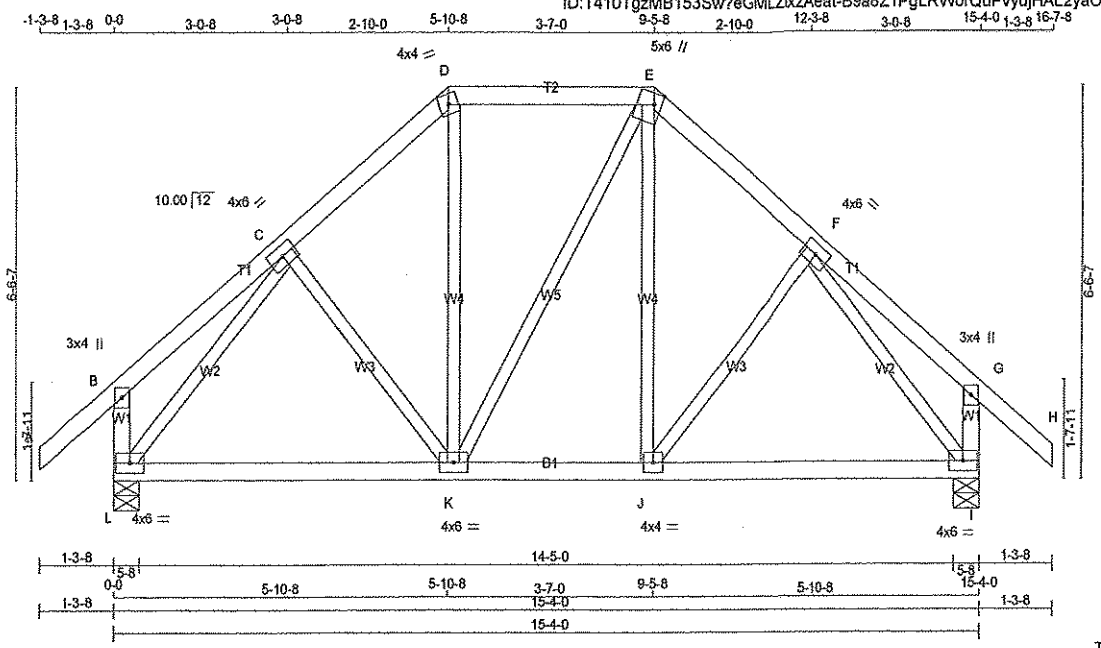

TOTAL WEIGHT = 76 lb

[M][F]

LUMBER

N. L. G. A. RULES

CHORDS	SIZE		LUMBER	DESCR.
A - D	2x4	DRY	No.2	SPF
D - E	2x4	DRY	No.2	SPF
E - H	2x4	DRY	No.2	SPF
L - B	2x4	DRY	No.2	SPF
I - G	2x4	DRY	No.2	SPF
L - I	2x4	DRY	No.2	SPF
ALL WEBS EXCEPT	2x3	DRY	No.2	SPF

DRY: SEASONED LUMBER.

PLATES (table is in inches)

JT	TYPE	PLATES	W	LEN	Y	X
B	TMV+p	MT20	3.0	4.0		
C	TMWW-t	MT20	4.0	6.0		
D	TTW-m	MT20	4.0	4.0		
E	TTWW+m	MT20	5.0	6.0	2.25	1.50
F	TMWW-t	MT20	4.0	6.0		
G	TMV+p	MT20	3.0	4.0		
I	BMVW1-t	MT20	4.0	6.0		
J	BMWW-t	MT20	4.0	4.0		
K	BMWWW-t	MT20	4.0	6.0		
L	BMVW1-t	MT20	4.0	6.0		

DIMENSIONS, SUPPORTS AND LOADINGS SPECIFIED BY FABRICATOR TO BE VERFIED BY BUILDING DESIGNER

BEARINGS

JT	FACTORED GROSS REACTION VERT	HORZ	MAXIMUM FACTORED GROSS REACTION DOWN	HORZ	UPLIFT	INPUT BRG IN-SX	REQRD BRG IN-SX
L	1321	0	1321	0	0	5-8	1-8
I	1321	0	1321	0	0	5-8	1-8

UNFACTORED REACTIONS

JT	1ST LCASE COMBINED	MAX./MIN. COMPONENT REACTIONS SNOW	LIVE	PERM.LIVE	WIND	DEAD	SOIL
L	1015	692 / 0	161 / 0	0 / 0	0 / 0	162 / 0	0 / 0
I	1015	692 / 0	161 / 0	0 / 0	0 / 0	162 / 0	0 / 0

BEARING MATERIAL TO BE SPF NO.2 OR BETTER AT JOINT(S) L, I

BRACING

TOP CHORD TO BE SHEATHED OR MAX. PURLIN SPACING = 6.25 FT.
MAX. UNBRACED BOTTOM CHORD LENGTH = 10.00 FT. OR RIGID CEILING DIRECTLY APPLIED.

ALL PITCH BREAKS AND PERIMETER CORNER JOINTS MUST BE LATERALLY RESTRAINED.

LOADING

TOTAL LOAD CASES: (4)

CHORDS

MEMB. FR-TO	MAX. FACTORED FORCE (LBS)	FACTORED VERT. LOAD (PLF) FROM	TO	LC1	MAX CSI (LC)	MAX. UNBRAC LENGTH
A- B	0 / 54	-122.2	-122.2	0.17 (1)	10.00	
B- C	0 / 25	-122.2	-122.2	0.16 (1)	10.00	
C- D	-913 / 0	-122.2	-122.2	0.13 (1)	6.25	
D- E	-683 / 0	-122.2	-122.2	0.21 (1)	6.25	
E- F	-913 / 0	-122.2	-122.2	0.13 (1)	6.25	
F- G	0 / 25	-122.2	-122.2	0.16 (1)	10.00	
G- H	0 / 54	-122.2	-122.2	0.17 (1)	10.00	
L- B	-307 / 0	0.0	0.0	0.03 (1)	7.81	
I- G	-307 / 0	0.0	0.0	0.03 (1)	7.81	
L- K	0 / 735	-28.0	-28.0	0.28 (2)	10.00	
K- J	0 / 683	-28.0	-28.0	0.26 (2)	10.00	
J- I	0 / 734	-28.0	-28.0	0.28 (2)	10.00	

WEBS

MEMB. FR-TO	MAX. FACTORED FORCE (LBS)	MAX CSI (LC)
C- K	-86 / 61	0.03 (1)
K- D	0 / 235	0.05 (2)
K- E	0 / 1	0.00 (2)
J- E	0 / 234	0.05 (2)
J- F	-87 / 61	0.03 (1)
L- C	-1195 / 0	0.43 (1)
F- I	-1194 / 0	0.43 (1)

DESIGN CRITERIA

SPECIFIED LOADS:

TOP CH.	LL	=	38.3	PSF
	DL	=	3.0	PSF
BOT CH.	LL	=	10.5	PSF
	DL	=	7.0	PSF
TOTAL LOAD		=	58.7	PSF

SPACING = 24.0 IN. C/C

LOADING IN FLAT SECTION BASED ON A SLOPE OF 6.00/12

THIS TRUSS IS DESIGNED FOR RESIDENTIAL OR SMALL BUILDING REQUIREMENTS OF PART 9, NBCC 2010

THIS DESIGN COMPLIES WITH:
- PART 9 OF OBC 2012 , BCBC 2012 , ABC 2014
- CSA 086-09
- TPIC 2011

(55 % OF 54.4 P.S.F. G.S.L. PLUS 8.4 P.S.F. RAIN LOAD) EQUALS 38.3 P.S.F. SPECIFIED ROOF LIVE LOAD

ALLOWABLE DEFL.(LL)= L/360 (0.51")
CALCULATED VERT. DEFL.(LL) = L/ 999 (0.06")
ALLOWABLE DEFL.(TL)= L/360 (0.51")
CALCULATED VERT. DEFL.(TL) = L/ 999 (0.10")

CSI: TC=0.21 (D-E:1) , BC=0.28 (I-J:2) , WB=0.43 (C-L:1) , SSI=0.17 (D-E:1)

DOL LUMBER=1.00 NAIL=1.00 LS BEND=1.10 COMP=1.10 SHEAR=1.10 TENS= 1.10

COMPANION LIVE LOAD FACTOR = 0.50

TRUSS PLATE MANUFACTURER IS NOT RESPONSIBLE FOR QUALITY CONTROL IN THE TRUSS MANUFACTURING PLANT .

NAIL VALUES

PLATE	GRIP(DRY) (PSI) MAX	MIN	SHEAR (PLI) MAX	MIN	SECTION (PLI) MAX	MIN
MT20	618	354	1667	822	2284	1656

PLATE PLACEMENT TOL. = 0.250 inches

PLATE ROTATION TOL. = 5.0 Deg.

JSI GRIP= 0.83 (C) (INPUT = 0.90)
JSI METAL= 0.29 (C) (INPUT = 1.00)

LICENSED PROFESSIONAL ENGINEER
6216
S. KATSOULAKOS
PROVINCE OF ONTARIO

DWG NO. TAM25712-16
STRUCTURAL
COMPONENT ONLY

JOB NAME	TRUSS NAME	QUANTITY	PLY	JOB DESC. 42067	DRWG NO.
266140	T20	3	1	TRUSS DESC.	

Tamarack Roof Truss, Burlington

Version 8.000 S Jan 15 2016 MiTek Industries, Inc. Thu Jun 02 08:36:20 2016 Page 1

ID:T410TgzMB153Sw?eGMLZlxzAeat-B9a8Z1PgLRWorQuPvyujHAL1faKZJEci8b15eezAOGv

Scale = 1:47.4

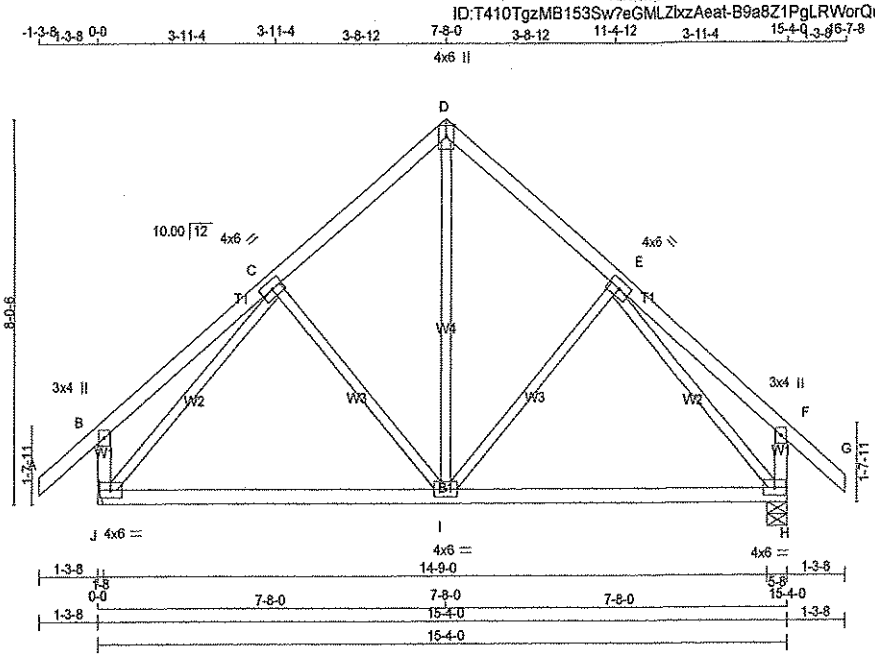

TOTAL WEIGHT = 3 X 71 = 214 lb

[M][F]

LUMBER

N. L. G. A. RULES

CHORDS	SIZE		LUMBER	DESCR.
A - D	2x4	DRY	No.2	SPF
D - G	2x4	DRY	No.2	SPF
J - B	2x4	DRY	No.2	SPF
H - F	2x4	DRY	No.2	SPF
J - H	2x4	DRY	No.2	SPF
ALL WEBS EXCEPT	2x3	DRY	No.2	SPF

DRY: SEASONED LUMBER.

PLATES (table is in inches)

JT	TYPE	PLATES	W	LEN	Y	X
B	TMV+p	MT20	3.0	4.0		
C	TMWW-t	MT20	4.0	6.0		
D	TTW+p	MT20	4.0	6.0	Edge	
E	TMWW-t	MT20	4.0	6.0		
F	TMV+p	MT20	3.0	4.0		
H	BMVW1-t	MT20	4.0	6.0		
I	BMWWW-t	MT20	4.0	6.0		
J	BMVW1-t	MT20	4.0	6.0		

Edge - INDICATES REFERENCE CORNER OF PLATE TOUCHES EDGE OF CHORD.

DIMENSIONS, SUPPORTS AND LOADINGS SPECIFIED BY FABRICATOR TO BE VERIFIED BY BUILDING DESIGNER

BEARINGS

JT	FACTORED GROSS REACTION VERT	HORZ	MAXIMUM FACTORED GROSS REACTION DOWN	HORZ	UPLIFT	INPUT BRG IN-SX	REQRD BRG IN-SX
J	1321	0	1321	0	0	HANGER BY OTHERS MIN. SEAT SIZE: 1-8	
H	1321	0	1321	0	0	5-8	1-8

UNFACTORED REACTIONS

JT	1ST LCASE COMBINED	MAX./MIN. COMPONENT REACTIONS SNOW	LIVE	PERM.LIVE	WIND	DEAD	SOIL
J	1015	692 / 0	161 / 0	0 / 0	0 / 0	162 / 0	0 / 0
H	1015	692 / 0	161 / 0	0 / 0	0 / 0	162 / 0	0 / 0

BEARING MATERIAL TO BE SPF NO.2 OR BETTER AT JOINT(S) H

BRACING

TOP CHORD TO BE SHEATHED OR MAX. PURLIN SPACING = 6.25 FT.
MAX. UNBRACED BOTTOM CHORD LENGTH = 10.00 FT. OR RIGID CEILING DIRECTLY APPLIED.

ALL PITCH BREAKS AND PERIMETER CORNER JOINTS MUST BE LATERALLY RESTRAINED.

LOADING

TOTAL LOAD CASES: (4)

CHORDS

MEMB. FR-TO	MAX. FACTORED FORCE (LBS)	FACTORED VERT. LOAD (PLF) FROM	TO	LC1 CSI (LC)	MAX. UNBRAC LENGTH
A- B	0 / 54	-122.2	-122.2	0.17 (1)	10.00
B- C	0 / 35	-122.2	-122.2	0.29 (1)	10.00
C- D	-814 / 0	-122.2	-122.2	0.23 (1)	6.25
D- E	-814 / 0	-122.2	-122.2	0.23 (1)	6.25
E- F	0 / 35	-122.2	-122.2	0.29 (1)	10.00
F- G	0 / 54	-122.2	-122.2	0.17 (1)	10.00
J- B	-347 / 0	0.0	0.0	0.04 (1)	7.81
H- F	-347 / 0	0.0	0.0	0.04 (1)	7.81
J- I	0 / 758	-28.0	-28.0	0.55 (2)	10.00
I- H	0 / 758	-28.0	-28.0	0.55 (2)	10.00

WEBS

MEMB. FR-TO	MAX. FACTORED FORCE (LBS)	MAX CSI (LC)
I- D	0 / 634	0.14 (1)
I- E	-244 / 37	0.15 (1)
C- I	-244 / 37	0.15 (1)
J- C	-1171 / 0	0.68 (1)
E- H	-1171 / 0	0.68 (1)

DESIGN CRITERIA

SPECIFIED LOADS:

TOP CH.	LL	=	38.3	PSF
	DL	=	3.0	PSF
BOT CH.	LL	=	10.5	PSF
	DL	=	7.0	PSF
TOTAL LOAD		=	58.7	PSF

SPACING = 24.0 IN. C/C

THIS TRUSS IS DESIGNED FOR RESIDENTIAL OR SMALL BUILDING REQUIREMENTS OF PART 9, NBCC 2010

THIS DESIGN COMPLIES WITH:
- PART 9 OF OBC 2012 , BCBC 2012 , ABC 2014
- CSA 086-09
- TPIC 2011

(55 % OF 54.4 P.S.F. G.S.L. PLUS 8.4 P.S.F. RAIN LOAD) EQUALS 38.3 P.S.F. SPECIFIED ROOF LIVE LOAD

ALLOWABLE DEFL.(LL)= L/360 (0.51")
CALCULATED VERT. DEFL.(LL) = L/ 999 (0.10")
ALLOWABLE DEFL.(TL)= L/360 (0.51")
CALCULATED VERT. DEFL.(TL) = L/ 999 (0.17")

CSI: TC=0.29 (E-F:1) , BC=0.55 (H-I:2) , WB=0.68 (C-J:1) , SSI=0.18 (H-I:3)

DOL LUMBER=1.00 NAIL=1.00 LS BEND=1.10 COMP=1.10 SHEAR=1.10 TENS= 1.10

COMPANION LIVE LOAD FACTOR = 0.50

TRUSS PLATE MANUFACTURER IS NOT RESPONSIBLE FOR QUALITY CONTROL IN THE TRUSS MANUFACTURING PLANT .

NAIL VALUES

PLATE	GRIP(DRY) (PSI) MAX	MIN	SHEAR (PLI) MAX	MIN	SECTION (PLI) MAX	MIN
MT20	618	354	1667	822	2284	1656

PLATE PLACEMENT TOL. = 0.250 inches

PLATE ROTATION TOL. = 5.0 Deg.

JSI GRIP= 0.75 (E) (INPUT = 0.90)
JSI METAL= 0.29 (E) (INPUT = 1.00)

LICENSED PROFESSIONAL ENGINEER
8216
S. KATSOULAKOS
PROVINCE OF ONTARIO

DWG NO. TAM25713-16
STRUCTURAL
COMPONENT ONLY

JOB NAME	TRUSS NAME	QUANTITY	PLY	JOB DESC. 42067	DRWG NO.
272254	T22	3	1	TRUSS DESC.	

Tamarack Roof Truss, Burlington

Version 8.030 S Oct 5 2016 MiTek Industries, Inc. Thu Sep 07 11:45:02 2017 Page 1

ID:UIXETLnDSJY2kU33EXjJkwym?kt-0IfG7Q6hXxB48mnYiUwPPJ39VJpJKT2yGH4Fzeyg2K?

Scale = 1:31.1

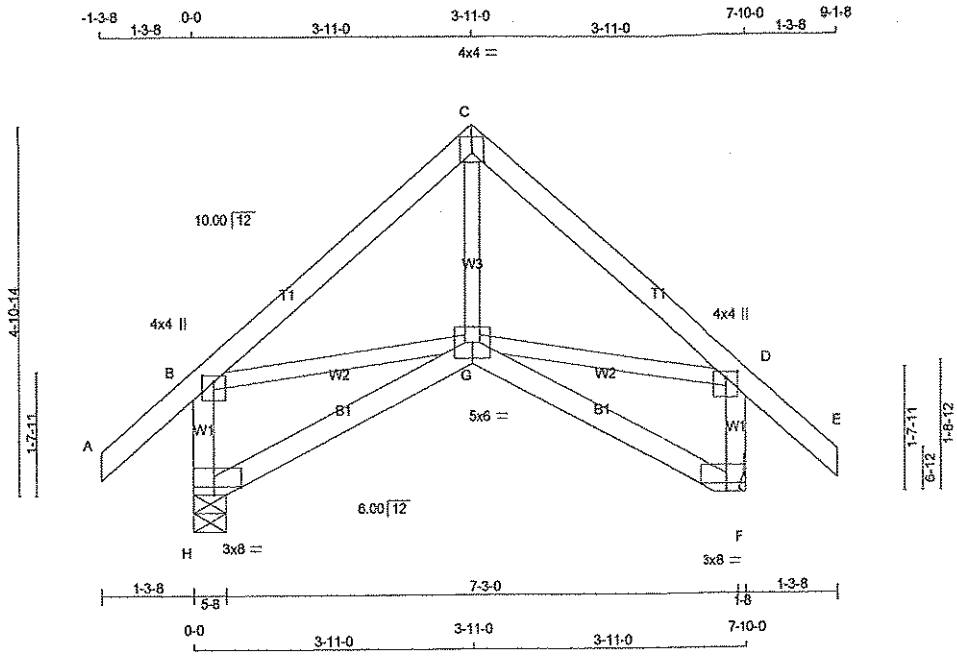

TOTAL WEIGHT = 3 X 37 = 110 lb

[M][F]

LUMBER

N. L. G. A. RULES

CHORDS	SIZE		LUMBER	DESCR.
A - C	2x4	DRY	No.2	SPF
C - E	2x4	DRY	No.2	SPF
H - B	2x4	DRY	No.2	SPF
F - D	2x4	DRY	No.2	SPF
H - G	2x4	DRY	No.2	SPF
G - F	2x4	DRY	No.2	SPF
ALL WEBS EXCEPT	2x3	DRY	No.2	SPF

DRY: SEASONED LUMBER.

PLATES (table is in inches)

JT	TYPE	PLATES	W	LEN	Y	X
B	TMVW+p	MT20	4.0	4.0	1.00	2.00
C	TTW-p	MT20	4.0	4.0	1.50	2.00
D	TMVW+p	MT20	4.0	4.0	1.00	2.00
F	BVM1-p	MT20	3.0	8.0	Edge	4.50
G	BBWWW-p	MT20	5.0	6.0		
H	BVM1-p	MT20	3.0	8.0	Edge	4.50

Edge - INDICATES REFERENCE CORNER OF PLATE TOUCHES EDGE OF CHORD.

DIMENSIONS, SUPPORTS AND LOADINGS SPECIFIED BY FABRICATOR TO BE VERIFIED BY BUILDING DESIGNER

BEARINGS

JT	FACTORED GROSS REACTION VERT	HORZ	MAXIMUM FACTORED GROSS REACTION DOWN	HORZ	UPLIFT	INPUT BRG IN-SX	REQRD BRG IN-SX
H	758	0	758	0	0	5-8	5-8
F	758	0	758	0	0	HANGER BY OTHERS	
						MIN. SEAT SIZE: 1-8	

UNFACTORED REACTIONS

JT	1ST LCASE COMBINED	MAX./MIN. COMPONENT REACTIONS SNOW	LIVE	PERM.LIVE	WIND	DEAD	SOIL
H	574	405 / 0	82 / 0	0 / 0	0 / 0	87 / 0	0 / 0
F	574	405 / 0	82 / 0	0 / 0	0 / 0	87 / 0	0 / 0

BEARING MATERIAL TO BE SPF NO.2 OR BETTER AT JOINT(S) H

BRACING

TOP CHORD TO BE SHEATHED OR MAX. PURLIN SPACING = 6.25 FT.
MAX. UNBRACED BOTTOM CHORD LENGTH = 10.00 FT. OR RIGID CEILING DIRECTLY APPLIED.

ALL PITCH BREAKS AND PERIMETER CORNER JOINTS MUST BE LATERALLY RESTRAINED.

LOADING

TOTAL LOAD CASES: (4)

CHORDS

MEMB. FR-TO	MAX. FACTORED FORCE (LBS)	FACTORED VERT. LOAD (PLF) FROM	TO	LC1	MAX CSI (LC)	MAX. UNBRAC LENGTH
A- B	0 / 54	-122.2	-122.2	0.17 (1)	10.00	
B- C	-531 / 0	-122.2	-122.2	0.24 (1)	6.25	
C- D	-531 / 0	-122.2	-122.2	0.24 (1)	6.25	
D- E	0 / 54	-122.2	-122.2	0.17 (1)	10.00	
H- B	-703 / 0	0.0	0.0	0.08 (1)	7.81	
F- D	-703 / 0	0.0	0.0	0.08 (1)	7.81	
H- G	0 / 0	-28.0	-28.0	0.13 (3)	10.00	
G- F	0 / 0	-28.0	-28.0	0.13 (3)	10.00	

WEBS

MEMB. FR-TO	MAX. FACTORED FORCE (LBS)	MAX CSI (LC)
G- C	0 / 250	0.06 (2)
B- G	0 / 411	0.09 (1)
G- D	0 / 411	0.09 (1)

DESIGN CRITERIA

SPECIFIED LOADS:

TOP CH.	LL =	38.3	PSF
	DL =	3.0	PSF
BOT CH.	LL =	10.5	PSF
	DL =	7.0	PSF
TOTAL LOAD	=	58.7	PSF

SPACING = 24.0 IN. C/C

THIS TRUSS IS DESIGNED FOR RESIDENTIAL OR SMALL BUILDING REQUIREMENTS OF PART 9, NBCC 2010

THIS DESIGN COMPLIES WITH:
- PART 9 OF OBC 2012 , BCBC 2012 , ABC 2014
- CSA 086-09
- TPIC 2011

(55 % OF 54.4 P.S.F. G.S.L. PLUS 8.4 P.S.F. RAIN LOAD) EQUALS 38.3 P.S.F. SPECIFIED ROOF LIVE LOAD

ALLOWABLE DEFL.(LL)= L/360 (0.26")
CALCULATED VERT. DEFL.(LL) = L/ 999 (0.02")
ALLOWABLE DEFL.(TL)= L/360 (0.26")
CALCULATED VERT. DEFL.(TL) = L/ 999 (0.03")

CSI: TC=0.24 (C-D:1) , BC=0.13 (G-H:3) , WB=0.09 (D-G:1) , SSI=0.14 (C-D:1)

DOL LUMBER=1.00 NAIL=1.00 LS BEND=1.10 COMP=1.10 SHEAR=1.10 TENS= 1.10

COMPANION LIVE LOAD FACTOR = 0.50

AUTOSOLVE HEELS OFF

TRUSS PLATE MANUFACTURER IS NOT RESPONSIBLE FOR QUALITY CONTROL IN THE TRUSS MANUFACTURING PLANT .

NAIL VALUES

PLATE	GRIP(DRY) (PSI) MAX	MIN	SHEAR (PLI) MAX	MIN	SECTION (PLI) MAX	MIN
MT20	618	354	1667	622	2284	1656

PLATE PLACEMENT TOL. = 0.250 inches

PLATE ROTATION TOL. = 5.0 Deg.

JSI GRIP= 0.83 (C) (INPUT = 0.90)
JSI METAL= 0.31 (H) (INPUT = 1.00)

LICENSED PROFESSIONAL ENGINEER
S. KATSOULAKOS
PROVINCE OF ONTARIO

DWG NO. TAM45209-17
STRUCTURAL
COMPONENT ONLY

JOB NAME	TRUSS NAME	QUANTITY	PLY	JOB DESC. 42067	DRWG NO.
272254	T23	1	1	TRUSS DESC.	

Tamarack Roof Truss, Burlington

Version 8.030 S Oct 5 2016 MiTek Industries, Inc. Thu Sep 07 11:45:02 2017 Page 1

ID:UIXETLnDSJY2kU33EXjJkwym?kt-0IfG7Q6hXxB48mnYiUwPPJ35DJgcKO0yGH4Fzeyg2K?

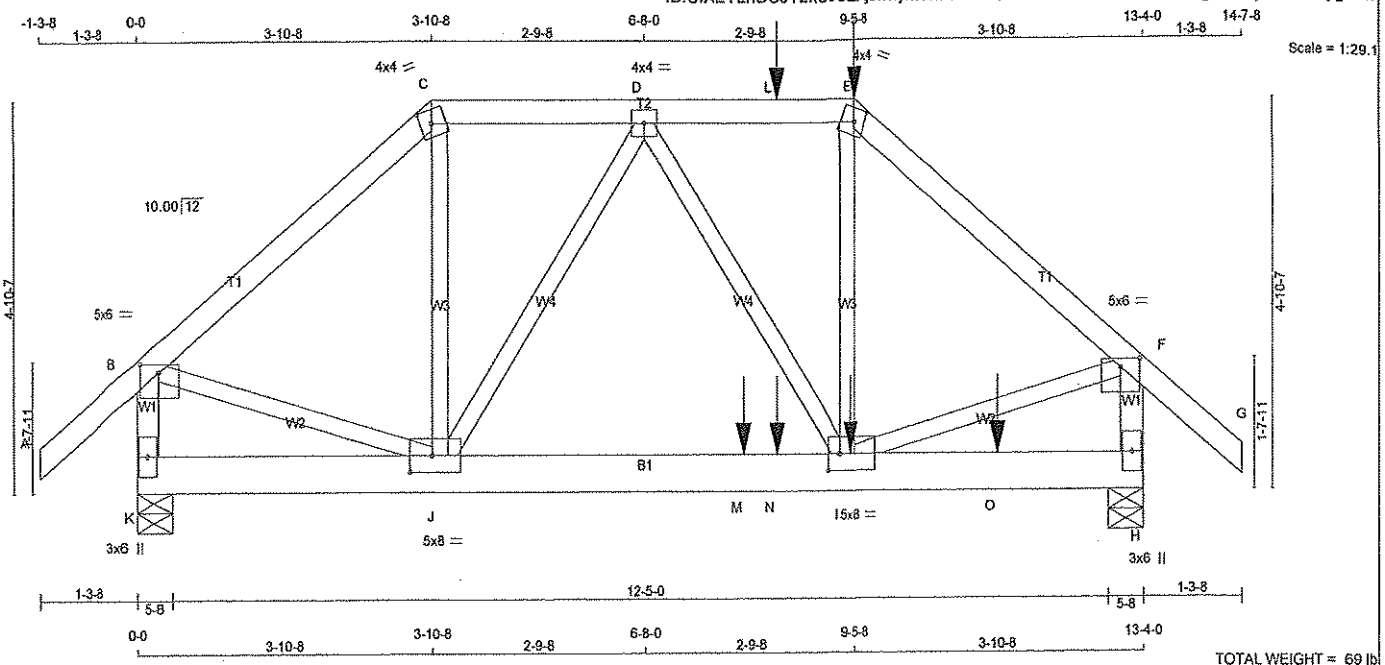

TOTAL WEIGHT = 69 lb

[M]

LUMBER

N. L. G. A. RULES

CHORDS	SIZE		LUMBER	DESCR.
A - C	2x4	DRY	No.2	SPF
C - E	2x4	DRY	No.2	SPF
E - G	2x4	DRY	No.2	SPF
K - B	2x4	DRY	No.2	SPF
H - F	2x4	DRY	No.2	SPF
K - H	2x6	DRY	No.2	SPF
ALL WEBS EXCEPT	2x3	DRY	No.2	SPF

DRY: SEASONED LUMBER.

PLATES (table is in inches)

JT	TYPE	PLATES	W	LEN	Y	X
B	TMWW-p	MT20	5.0	6.0	1.25	3.00
C	TTW-m	MT20	4.0	4.0	2.00	1.75
D	TMWW-t	MT20	4.0	4.0		
E	TTW-m	MT20	4.0	4.0	2.00	1.75
F	TMWW-p	MT20	5.0	6.0	1.25	3.00
H	BMV1+p	MT20	3.0	6.0		
I	BMWWW-t	MT20	5.0	8.0	2.50	2.00
J	BMWWW-t	MT20	5.0	8.0	2.50	3.50
K	BMV1+p	MT20	3.0	6.0		

HANGERS NOTES

1) SPECIAL HANGER(S) OR CONNECTION(S) REQUIRED TO SUPPORT CONCENTRATED LOAD(S) 114.6 lbs FACTORED DOWN AT 8-4-12, AND 384.1 lbs FACTORED DOWN AT 9-5-8 ON TOP CHORD, AND 1042.0 lbs FACTORED DOWN AT 7-11-8, 42.0 lbs FACTORED DOWN AT 8-4-12, AND 42.0 lbs FACTORED DOWN AT 9-4-12, AND 42.0 lbs FACTORED DOWN AT 11-4-12 ON BOTTOM CHORD. DESIGN FOR UNSPECIFIED CONNECTION(S) IS DELEGATED TO THE BUILDING DESIGNER.

DIMENSIONS, SUPPORTS AND LOADINGS SPECIFIED BY FABRICATOR TO BE VERIFIED BY BUILDING DESIGNER

BEARINGS

JT	FACTORED GROSS REACTION VERT	HORZ	MAXIMUM FACTORED GROSS REACTION DOWN	HORZ	UPLIFT	INPUT BRG IN-SX	REQRD BRG IN-SX
K	1764	0	1764	0	0	5-8	5-8
H	2190	0	2190	0	0	5-8	5-8

UNFACTORED REACTIONS

JT	1ST LCASE COMBINED	MAX /MIN COMPONENT REACTIONS SNOW	LIVE	PERM.LIVE	WIND	DEAD	SOIL
K	1336	945 / 0	189 / 0	0 / 0	0 / 0	201 / 0	0 / 0
H	1655	1176 / 0	231 / 0	0 / 0	0 / 0	248 / 0	0 / 0

BEARING MATERIAL TO BE SPF NO.2 OR BETTER AT JOINT(S) K, H

BRACING

TOP CHORD TO BE SHEATHED OR MAX. PURLIN SPACING = 4.17 FT.
MAX. UNBRACED BOTTOM CHORD LENGTH = 10.00 FT. OR RIGID CEILING DIRECTLY APPLIED.

ALL PITCH BREAKS AND PERIMETER CORNER JOINTS MUST BE LATERALLY RESTRAINED.

LOADING

TOTAL LOAD CASES: (4)

CHORDS

MEMB. FR-TO	MAX. FACTORED FORCE (LBS)	FACTORED VERT. LOAD (PLF) FROM	TO	LC1 CSI (LC)	MAX UNBRAC LENGTH
A- B	0 / 54	-122.2	-122.2	0.19 (1)	10.00
B- C	-1568 / 0	-122.2	-122.2	0.41 (1)	4.74
C- D	-1216 / 0	-122.2	-122.2	0.21 (1)	5.53
D- L	-1612 / 0	-122.2	-122.2	0.25 (1)	4.90
L- E	-1612 / 0	-122.2	-122.2	0.25 (1)	4.90
E- F	-2089 / 0	-122.2	-122.2	0.45 (1)	4.17
F- G	0 / 54	-122.2	-122.2	0.19 (1)	10.00
K- B	-1783 / 0	0.0	0.0	0.20 (1)	6.21
H- F	-2240 / 0	0.0	0.0	0.26 (1)	5.63
K- J	0 / 0	-28.0	-28.0	0.22 (1)	10.00
J- M	0 / 1549	-28.0	-28.0	0.75 (1)	10.00
M- N	0 / 1549	-28.0	-28.0	0.75 (1)	10.00
N- I	0 / 1549	-28.0	-28.0	0.75 (1)	10.00
I- O	0 / 0	-28.0	-28.0	0.35 (1)	10.00
O- H	0 / 0	-28.0	-28.0	0.35 (1)	10.00

WEBS

MEMB. FR-TO	MAX. FACTORED FORCE (LBS)	MAX CSI (LC)
J- C	0 / 636	0.16 (1)
I- E	0 / 512	0.13 (1)
B- J	0 / 1257	0.31 (1)
I- F	0 / 1674	0.41 (1)
J- D	-649 / 0	0.30 (1)
D- I	0 / 122	0.03 (1)

FACTORED CONCENTRATED LOADS (LBS)

JT	LOC.	LC1	MAX-	MAX+	FACE	DIR.	TYPE
E	9-5-8	-384	-384	---	BACK	VERT	TOTAL
I	9-4-12	-24	-42	---	BACK	VERT	TOTAL
L	8-4-12	-115	-115	---	BACK	VERT	TOTAL
M	7-11-8	-1042	-1042	---	BACK	VERT	TOTAL
N	8-4-12	-24	-42	---	BACK	VERT	TOTAL
O	11-4-12	-24	-42	---	BACK	VERT	TOTAL

LICENSED PROFESSIONAL ENGINEER
9777
S. KATSOULAKOS
PROVINCE OF ONTARIO

DESIGN CRITERIA

SPECIFIED LOADS:

TOP CH.	LL	=	38.3	PSF
	DL	=	3.0	PSF
BOT CH.	LL	=	10.5	PSF
	DL	=	7.0	PSF
TOTAL LOAD		=	58.7	PSF

SPACING = 24.0 IN. C/C

LOADING IN FLAT SECTION BASED ON A SLOPE OF 6.00/12

THIS TRUSS IS DESIGNED FOR RESIDENTIAL OR SMALL BUILDING REQUIREMENTS OF PART 9, NBCC 2010

THIS DESIGN COMPLIES WITH:
- PART 9 OF OBC 2012 , BCBC 2012 , ABC 2014
- CSA 086-09
- TPIC 2011

(55 % OF 54.4 P.S.F. G.S.L. PLUS 8.4 P.S.F. RAIN LOAD) EQUALS 38.3 P.S.F. SPECIFIED ROOF LIVE LOAD

ALLOWABLE DEFL.(LL)= L/360 (0.44")
CALCULATED VERT. DEFL.(LL) = L/ 999 (0.08")
ALLOWABLE DEFL.(TL)= L/360 (0.44")
CALCULATED VERT. DEFL.(TL) = L/ 999 (0.12")

CSI: TC=0.45 (E-F:1) , BC=0.75 (I-J:1) , WB=0.41 (F-I:1) , SSI=0.60 (I-J:1)

DOL LUMBER=1.00 NAIL=1.00 LS BEND=1.00 COMP=1.00 SHEAR=1.00 TENS= 1.00

COMPANION LIVE LOAD FACTOR = 0.50

TRUSS PLATE MANUFACTURER IS NOT RESPONSIBLE FOR QUALITY CONTROL IN THE TRUSS MANUFACTURING PLANT .

NAIL VALUES

PLATE	GRIP(DRY) (PSI) MAX	MIN	SHEAR (PLI) MAX	MIN	SECTION (PLI) MAX	MIN
MT20	618	354	1667	822	2284	1656

PLATE PLACEMENT TOL. = 0.250 inches

PLATE ROTATION TOL. = 5.0 Deg.

JSI GRIP= 0.89 (F) (INPUT = 0.90)
JSI METAL= 0.46 (F) (INPUT = 1.00)

DWG NO. TAM 452/017
STRUCTURAL
COMPONENT ONLY

JOB NAME	TRUSS NAME	QUANTITY	PLY	JOB DESC. 42067	DRWG NO.
272254	T24	1	1	TRUSS DESC.	

Tamarack Roof Truss, Burlington

Version 8.030 S Oct 5 2016 MiTek Industries, Inc. Thu Sep 07 11:45:02 2017 Page 1
ID:UIXETLnDSJY2kU33EXjJkwym?kt-0IfG7Q6hXxB48mnYiUwPPJ3AgJlmKPtyGH4Fzeyg2K?

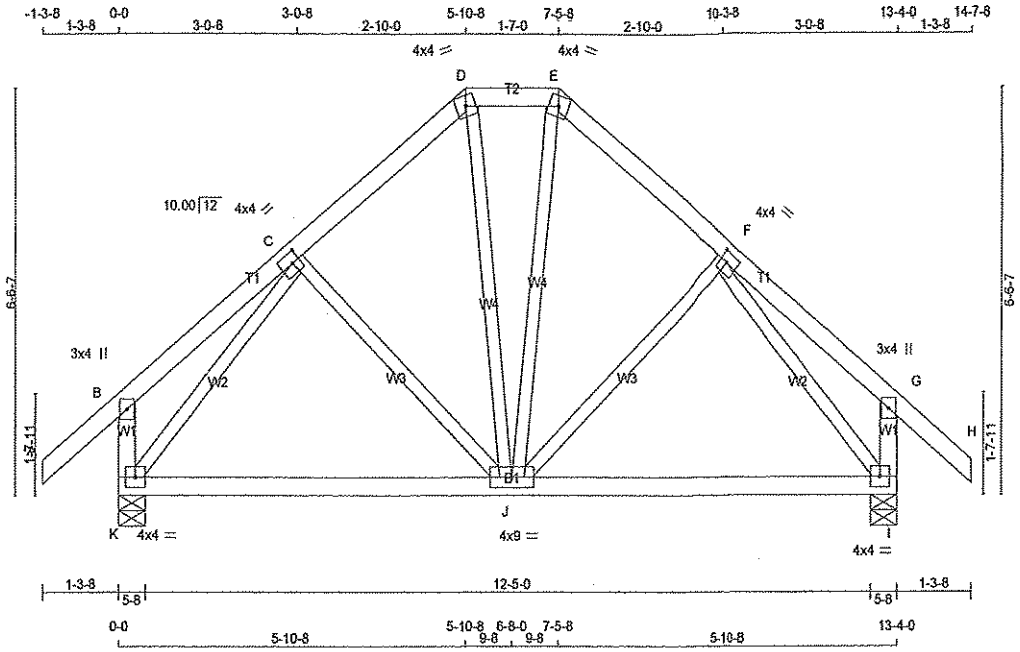

TOTAL WEIGHT = 66 lb

[M][F]

LUMBER

N. L. G. A. RULES

CHORDS	SIZE		LUMBER	DESCR.
A - D	2x4	DRY	No.2	SPF
D - E	2x4	DRY	No.2	SPF
E - H	2x4	DRY	No.2	SPF
K - B	2x4	DRY	No.2	SPF
I - G	2x4	DRY	No.2	SPF
K - I	2x4	DRY	No.2	SPF
ALL WEBS EXCEPT	2x3	DRY	No.2	SPF

DRY: SEASONED LUMBER.

PLATES (table is in inches)

JT	TYPE	PLATES	W	LEN	Y	X
B	TMV+p	MT20	3.0	4.0		
C	TMWW-t	MT20	4.0	4.0	2.00	1.50
D	TTW-m	MT20	4.0	4.0		
E	TTW-m	MT20	4.0	4.0		
F	TMWW-t	MT20	4.0	4.0	2.00	1.50
G	TMV+p	MT20	3.0	4.0		
I	BMVW1-t	MT20	4.0	4.0		
J	BMWWWW*-I	MT20	4.0	9.0		
K	BMVW1-t	MT20	4.0	4.0		

DIMENSIONS, SUPPORTS AND LOADINGS SPECIFIED BY FABRICATOR TO BE VERIFIED BY BUILDING DESIGNER

BEARINGS

JT	FACTORED GROSS REACTION VERT	HORZ	MAXIMUM FACTORED GROSS REACTION DOWN	HORZ	UPLIFT	INPUT BRG IN-SX	REQRD BRG IN-SX
K	1171	0	1171	0	0	5-8	5-8
I	1171	0	1171	0	0	5-8	5-8

UNFACTORED REACTIONS

JT	1ST LCASE COMBINED	MAX./MIN. COMPONENT REACTIONS SNOW	LIVE	PERM.LIVE	WIND	DEAD	SOIL
K	897	616 / 0	140 / 0	0 / 0	0 / 0	142 / 0	0 / 0
I	897	616 / 0	140 / 0	0 / 0	0 / 0	142 / 0	0 / 0

BEARING MATERIAL TO BE SPF NO.2 OR BETTER AT JOINT(S) K, I

BRACING

TOP CHORD TO BE SHEATHED OR MAX. PURLIN SPACING = 6.25 FT.
MAX. UNBRACED BOTTOM CHORD LENGTH = 10.00 FT. OR RIGID CEILING DIRECTLY APPLIED.

ALL PITCH BREAKS AND PERIMETER CORNER JOINTS MUST BE LATERALLY RESTRAINED.

LOADING

TOTAL LOAD CASES: (4)

CHORDS

MEMB. FR-TO	MAX. FACTORED FORCE (LBS)	FACTORED VERT. LOAD LC1 (PLF) FROM	TO	MAX CSI (LC)	MAX. UNBRAC LENGTH
A- B	0 / 54	-122.2	-122.2	0.17 (1)	10.00
B- C	0 / 26	-122.2	-122.2	0.16 (1)	10.00
C- D	-715 / 0	-122.2	-122.2	0.13 (1)	6.25
D- E	-554 / 0	-122.2	-122.2	0.04 (1)	6.25
E- F	-715 / 0	-122.2	-122.2	0.13 (1)	6.25
F- G	0 / 26	-122.2	-122.2	0.16 (1)	10.00
G- H	0 / 54	-122.2	-122.2	0.17 (1)	10.00
K- B	-307 / 0	0.0	0.0	0.03 (1)	7.81
I- G	-307 / 0	0.0	0.0	0.03 (1)	7.81
K- J	0 / 618	-28.0	-28.0	0.42 (2)	10.00
J- I	0 / 618	-28.0	-28.0	0.42 (2)	10.00

WEBS

MEMB. FR-TO	MAX. FACTORED FORCE (LBS)	MAX CSI (LC)
C- J	-128 / 46	0.06 (1)
J- F	-128 / 46	0.06 (1)
K- C	-1005 / 0	0.36 (1)
F- I	-1005 / 0	0.36 (1)
D- J	0 / 208	0.05 (2)
J- E	0 / 208	0.05 (2)

DESIGN CRITERIA

SPECIFIED LOADS:

TOP CH.	LL	=	38.3	PSF
	DL	=	3.0	PSF
BOT CH.	LL	=	10.5	PSF
	DL	=	7.0	PSF
TOTAL LOAD		=	58.7	PSF

SPACING = 24.0 IN. C/C

LOADING IN FLAT SECTION BASED ON A SLOPE OF 6.00/12

THIS TRUSS IS DESIGNED FOR RESIDENTIAL OR SMALL BUILDING REQUIREMENTS OF PART 9, NBCC 2010

THIS DESIGN COMPLIES WITH:
- PART 9 OF OBC 2012 , BCBC 2012 , ABC 2014
- CSA 086-09
- TPIC 2011

(55 % OF 54.4 P.S.F. G.S.L. PLUS 8.4 P.S.F. RAIN LOAD) EQUALS 38.3 P.S.F. SPECIFIED ROOF LIVE LOAD

ALLOWABLE DEFL.(LL)= L/360 (0.44")
CALCULATED VERT. DEFL.(LL) = L/ 999 (0.06")
ALLOWABLE DEFL.(TL)= L/360 (0.44")
CALCULATED VERT. DEFL.(TL) = L/ 999 (0.10")

CSI: TC=0.17 (A-B:1) , BC=0.42 (I-J:2) , WB=0.36 (C-K:1) , SSI=0.16 (J-K:3)

DOL LUMBER=1.00 NAIL=1.00 LS BEND=1.10 COMP=1.10 SHEAR=1.10 TENS= 1.10

COMPANION LIVE LOAD FACTOR = 0.50

TRUSS PLATE MANUFACTURER IS NOT RESPONSIBLE FOR QUALITY CONTROL IN THE TRUSS MANUFACTURING PLANT .

NAIL VALUES

PLATE	GRIP(DRY) (PSI) MAX	MIN	SHEAR (PLI) MAX	MIN	SECTION (PLI) MAX	MIN
MT20	618	354	1667	822	2284	1656

PLATE PLACEMENT TOL. = 0.250 inches

PLATE ROTATION TOL. = 5.0 Deg.

JSI GRIP= 0.80 (F) (INPUT = 0.90)
JSI METAL= 0.36 (F) (INPUT = 1.00)

LICENSED PROFESSIONAL ENGINEER
9217
S. KATSOULAKOS
PROVINCE OF ONTARIO

DWG NO. TAM 4521/-17
STRUCTURAL
COMPONENT ONLY

JOB NAME	TRUSS NAME	QUANTITY	PLY	JOB DESC. 42067	DRWG NO.
272254	T25	3	1	TRUSS DESC.	

Tamarack Roof Truss, Burlington

Version 8.030 S Oct 5 2016 MiTek Industries, Inc. Thu Sep 07 11:45:03 2017 Page 1

ID:UIXETLnDSJY2kU33EXjJkwym?kt-VUDfKi6JlEJxlwMkGBRexWcKii5?3rq5VxqpV4yg2K_

Scale = 1:43.2

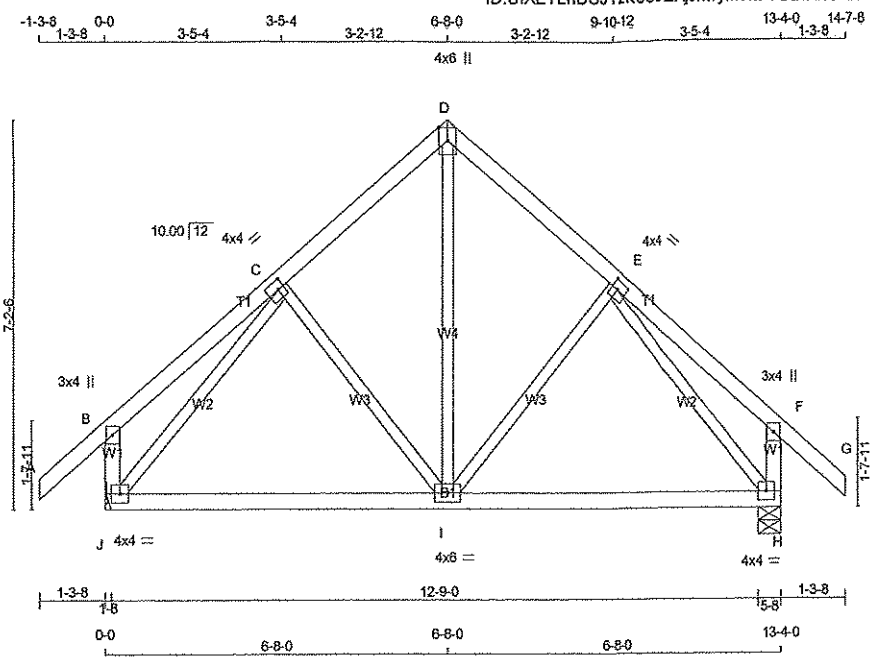

TOTAL WEIGHT = 3 X 63 = 190 lb

[M][F]

LUMBER

N. L. G. A. RULES

CHORDS	SIZE		LUMBER	DESCR.
A - D	2x4	DRY	No.2	SPF
D - G	2x4	DRY	No.2	SPF
J - B	2x4	DRY	No.2	SPF
H - F	2x4	DRY	No.2	SPF
J - H	2x4	DRY	No.2	SPF
ALL WEBS EXCEPT	2x3	DRY	No.2	SPF

DRY: SEASONED LUMBER.

PLATES (table is in inches)

JT	TYPE	PLATES	W	LEN	Y	X
B	TMV+p	MT20	3.0	4.0		
C	TMWW-t	MT20	4.0	4.0	2.00	1.50
D	TTW+p	MT20	4.0	6.0	Edge	
E	TMWW-t	MT20	4.0	4.0	2.00	1.50
F	TMV+p	MT20	3.0	4.0		
H	BMVW1-t	MT20	4.0	4.0		
I	BMWWW-t	MT20	4.0	6.0		
J	BMVW1-t	MT20	4.0	4.0		

Edge - INDICATES REFERENCE CORNER OF PLATE TOUCHES EDGE OF CHORD.

DIMENSIONS, SUPPORTS AND LOADINGS SPECIFIED BY FABRICATOR TO BE VERIFIED BY BUILDING DESIGNER

BEARINGS

JT	FACTORED GROSS REACTION VERT	HORZ	MAXIMUM FACTORED GROSS REACTION DOWN	HORZ	UPLIFT	INPUT BRG	REQRD BRG
J	1171	0	1171	0	0	IN-SX	IN-SX
						HANGER BY OTHERS	
						MIN. SEAT SIZE: 1-8	
H	1171	0	1171	0	0	5-8	5-8

UNFACTORED REACTIONS

JT	1ST LCASE COMBINED	MAX /MIN. COMPONENT REACTIONS SNOW	LIVE	PERM.LIVE	WIND	DEAD	SOIL
J	897	616 / 0	140 / 0	0 / 0	0 / 0	142 / 0	0 / 0
H	897	616 / 0	140 / 0	0 / 0	0 / 0	142 / 0	0 / 0

BEARING MATERIAL TO BE SPF NO.2 OR BETTER AT JOINT(S) H

BRACING

TOP CHORD TO BE SHEATHED OR MAX. PURLIN SPACING = 6.25 FT.
MAX. UNBRACED BOTTOM CHORD LENGTH = 10.00 FT. OR RIGID CEILING DIRECTLY APPLIED.

ALL PITCH BREAKS AND PERIMETER CORNER JOINTS MUST BE LATERALLY RESTRAINED.

LOADING

TOTAL LOAD CASES: (4)

CHORDS

MEMB. FR-TO	MAX. FACTORED FORCE (LBS)	FACTORED VERT. LOAD (PLF) FROM	TO	LC1	MAX CSI (LC)	MAX. UNBRAC LENGTH
A- B	0 / 54	-122.2	-122.2	0.17 (1)	10.00	
B- C	0 / 30	-122.2	-122.2	0.21 (1)	10.00	
C- D	-690 / 0	-122.2	-122.2	0.17 (1)	6.25	
D- E	-690 / 0	-122.2	-122.2	0.17 (1)	6.25	
E- F	0 / 30	-122.2	-122.2	0.21 (1)	10.00	
F- G	0 / 54	-122.2	-122.2	0.17 (1)	10.00	
J- B	-325 / 0	0.0	0.0	0.03 (1)	7.81	
H- F	-325 / 0	0.0	0.0	0.03 (1)	7.81	
J- I	0 / 631	-28.0	-28.0	0.42 (2)	10.00	
I- H	0 / 631	-28.0	-28.0	0.42 (2)	10.00	

WEBS

MEMB. FR-TO	MAX. FACTORED FORCE (LBS)	MAX CSI (LC)
I- D	0 / 527	0.12 (1)
I- E	-193 / 39	0.09 (1)
C- I	-193 / 39	0.09 (1)
J- C	-999 / 0	0.44 (1)
E- H	-999 / 0	0.44 (1)

DESIGN CRITERIA

SPECIFIED LOADS:

TOP CH.	LL	=	38.3	PSF
	DL	=	3.0	PSF
BOT CH.	LL	=	10.5	PSF
	DL	=	7.0	PSF
TOTAL LOAD		=	58.7	PSF

SPACING = 24.0 IN. C/C

THIS TRUSS IS DESIGNED FOR RESIDENTIAL OR SMALL BUILDING REQUIREMENTS OF PART 9, NBCC 2010

THIS DESIGN COMPLIES WITH:
- PART 9 OF OBC 2012 , BCBC 2012 , ABC 2014
- CSA 086-09
- TPIC 2011

(55 % OF 54.4 P.S.F. G.S.L. PLUS 8.4 P.S.F. RAIN LOAD) EQUALS 38.3 P.S.F. SPECIFIED ROOF LIVE LOAD

ALLOWABLE DEFL.(LL)= L/360 (0.44")
CALCULATED VERT. DEFL.(LL) = L/ 999 (0.06")
ALLOWABLE DEFL.(TL)= L/360 (0.44")
CALCULATED VERT. DEFL.(TL) = L/ 999 (0.10")

CSI: TC=0.21 (B-C:1) , BC=0.42 (I-J:2) , WB=0.44 (C-J:1) , SSI=0.16 (I-J:3)

DOL LUMBER=1.00 NAIL=1.00 LS BEND=1.10 COMP=1.10 SHEAR=1.10 TENS= 1.10

COMPANION LIVE LOAD FACTOR = 0.50

TRUSS PLATE MANUFACTURER IS NOT RESPONSIBLE FOR QUALITY CONTROL IN THE TRUSS MANUFACTURING PLANT .

NAIL VALUES

PLATE	GRIP(DRY) (PSI) MAX	MIN	SHEAR (PLI) MAX	MIN	SECTION (PLI) MAX	MIN
MT20	618	354	1667	822	2284	1656

PLATE PLACEMENT TOL. = 0.250 inches

PLATE ROTATION TOL. = 5.0 Deg.

JSI GRIP= 0.84 (E) (INPUT = 0.90)
JSI METAL= 0.37 (E) (INPUT = 1.00)

LICENSED PROFESSIONAL ENGINEER
9/7/17
S. KATSOULAKOS
PROVINCE OF ONTARIO

DWG NO. TAM45212-17
STRUCTURAL
COMPONENT ONLY

JOB NAME	TRUSS NAME	QUANTITY	PLY	JOB DESC. 42067	DRWG NO.
272252	T30	2	1	TRUSS DESC.	

Tamarack Roof Truss, Burlington

Version 8.000 S Jan 15 2016 MiTek Industries, Inc. Tue Aug 23 04:45:29 2016 Page 1

ID:rMfbEJ_R5u6XmdIRC13avWymE9I-?Z?MC?iRbA3MfY?dcd_ZPNa4ZRF2m6Er0MCOoKyi4tK

Scale = 1:48.9

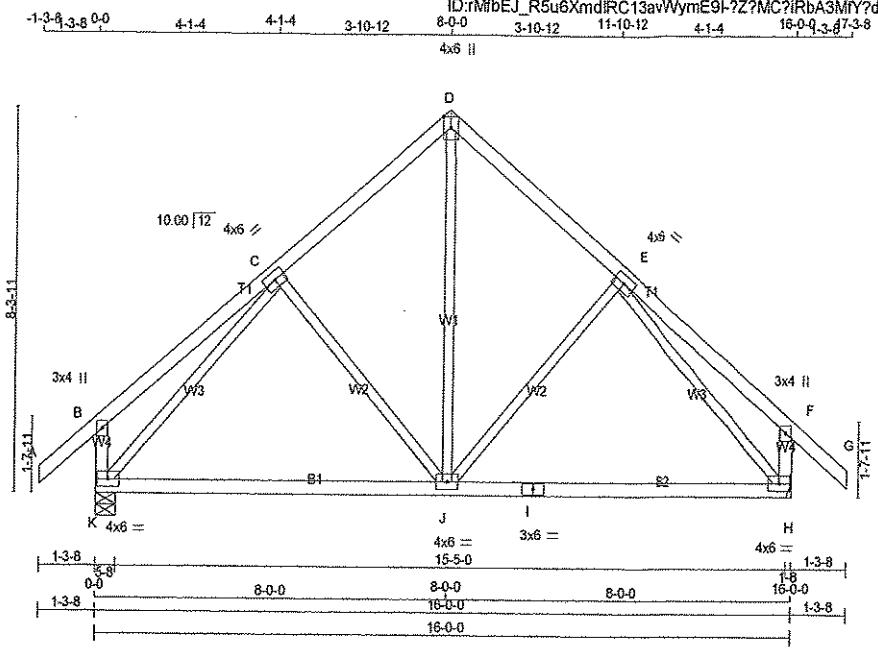

TOTAL WEIGHT = 2 X 74 = 148 lb

(M)(F)

LUMBER

N. L. G. A. RULES

CHORDS	SIZE		LUMBER	DESCR.
A - D	2x4	DRY	No.2	SPF
D - G	2x4	DRY	No.2	SPF
K - B	2x4	DRY	No.2	SPF
H - F	2x4	DRY	No.2	SPF
K - I	2x4	DRY	No.2	SPF
I - H	2x4	DRY	No.2	SPF
ALL WEBS EXCEPT	2x3	DRY	No.2	SPF

DRY: SEASONED LUMBER.

PLATES (table is in inches)

JT	TYPE	PLATES	W	LEN	Y	X
B	TMV+p	MT20	3.0	4.0		
C	TMWW-t	MT20	4.0	6.0		
D	TTW+p	MT20	4.0	6.0	Edge	
E	TMWW-t	MT20	4.0	6.0		
F	TMV+p	MT20	3.0	4.0		
H	BMVW1-t	MT20	4.0	6.0		
I	BS-t	MT20	3.0	6.0		
J	BMWWW-t	MT20	4.0	6.0		
K	BMVW1-t	MT20	4.0	6.0		

Edge - INDICATES REFERENCE CORNER OF PLATE TOUCHES EDGE OF CHORD.

DIMENSIONS, SUPPORTS AND LOADINGS SPECIFIED BY FABRICATOR TO BE VERIFIED BY BUILDING DESIGNER

BEARINGS

JT	FACTORED GROSS REACTION VERT	HORZ	MAXIMUM FACTORED GROSS REACTION DOWN	HORZ	UPLIFT	INPUT BRG IN-SX	REQRD BRG IN-SX
K	1371	0	1371	0	0	5-8	1-8
H	1371	0	1371	0	0	HANGER BY OTHERS MIN. SEAT SIZE: 1-8	

UNFACTORED REACTIONS

JT	1ST LCASE COMBINED	MAX./MIN. COMPONENT REACTIONS SNOW	LIVE	PERM.LIVE	WIND	DEAD	SOIL
K	1054	718 / 0	168 / 0	0 / 0	0 / 0	168 / 0	0 / 0
H	1054	718 / 0	168 / 0	0 / 0	0 / 0	168 / 0	0 / 0

BEARING MATERIAL TO BE SPF NO.2 OR BETTER AT JOINT(S) K

BRACING

TOP CHORD TO BE SHEATHED OR MAX. PURLIN SPACING = 6.25 FT.
MAX. UNBRACED BOTTOM CHORD LENGTH = 10.00 FT. OR RIGID CEILING DIRECTLY APPLIED.

ALL PITCH BREAKS AND PERIMETER CORNER JOINTS MUST BE LATERALLY RESTRAINED.

LOADING

TOTAL LOAD CASES: (4)

CHORDS

MEMB. FR-TO	MAX. FACTORED FORCE (LBS)	FACTORED VERT. LOAD (PLF) FROM	TO	LC1	MAX CSI (LC)	MAX. UNBRAC LENGTH
A- B	0 / 54	-122.2	-122.2	0.17 (1)	10.00	
B- C	0 / 37	-122.2	-122.2	0.32 (1)	10.00	
C- D	-856 / 0	-122.2	-122.2	0.25 (1)	6.25	
D- E	-856 / 0	-122.2	-122.2	0.25 (1)	6.25	
E- F	0 / 37	-122.2	-122.2	0.32 (1)	10.00	
F- G	0 / 54	-122.2	-122.2	0.17 (1)	10.00	
K- B	-355 / 0	0.0	0.0	0.04 (1)	7.81	
H- F	-355 / 0	0.0	0.0	0.04 (1)	7.81	
K- J	0 / 801	-28.0	-28.0	0.60 (2)	10.00	
J- I	0 / 801	-28.0	-28.0	0.60 (2)	10.00	
I- H	0 / 801	-28.0	-28.0	0.60 (2)	10.00	

WEBS

MEMB. FR-TO	MAX. FACTORED FORCE (LBS)	MAX CSI (LC)
J- D	0 / 671	0.15 (1)
J- E	-261 / 37	0.17 (1)
C- J	-261 / 37	0.17 (1)
K- C	-1228 / 0	0.78 (1)
E- H	-1228 / 0	0.78 (1)

DESIGN CRITERIA

SPECIFIED LOADS:

TOP CH.	LL	=	38.3	PSF
	DL	=	3.0	PSF
BOT CH.	LL	=	10.5	PSF
	DL	=	7.0	PSF
TOTAL LOAD		=	58.7	PSF

SPACING = 24.0 IN. C/C

THIS TRUSS IS DESIGNED FOR RESIDENTIAL OR SMALL BUILDING REQUIREMENTS OF PART 9, NBCC 2010

THIS DESIGN COMPLIES WITH:
- PART 9 OF OBC 2012 , BCBC 2012 , ABC 2014
- CSA 086-09
- TPIC 2011

(55 % OF 54.4 P.S.F. G.S.L. PLUS 8.4 P.S.F. RAIN LOAD) EQUALS 38.3 P.S.F. SPECIFIED ROOF LIVE LOAD

ALLOWABLE DEFL.(LL)= L/360 (0.53")
CALCULATED VERT. DEFL.(LL) = L/ 999 (0.12")
ALLOWABLE DEFL.(TL)= L/360 (0.53")
CALCULATED VERT. DEFL.(TL) = L/ 954 (0.20")

CSI: TC=0.32 (E-F:1) , BC=0.60 (J-K:2) , WB=0.78 (C-K:1) , SSI=0.19 (H-J:3)

DOL LUMBER=1.00 NAIL=1.00 LS BEND=1.10 COMP=1.10 SHEAR=1.10 TENS= 1.10

COMPANION LIVE LOAD FACTOR = 0.50

TRUSS PLATE MANUFACTURER IS NOT RESPONSIBLE FOR QUALITY CONTROL IN THE TRUSS MANUFACTURING PLANT .

NAIL VALUES

PLATE	GRIP(DRY) (PSI) MAX	MIN	SHEAR (PLI) MAX	MIN	SECTION (PLI) MAX	MIN
MT20	618	354	1667	822	2284	1656

PLATE PLACEMENT TOL. = 0.250 inches

PLATE ROTATION TOL. = 5.0 Deg.

JSI GRIP= 0.78 (E) (INPUT = 0.90)
JSI METAL= 0.30 (E) (INPUT = 1.00)

LICENSED PROFESSIONAL ENGINEER
82316
S. KATSOULAKOS
PROVINCE OF ONTARIO

DWG NO. TAM38464-16
STRUCTURAL
COMPONENT ONLY

JOB NAME	TRUSS NAME	QUANTITY	PLY	JOB DESC. 42067	DRWG NO.
272252	G30	1	1	TRUSS DESC.	

Tamarack Roof Truss, Burlington

Version 8.000 S Jan 15 2016 MiTek Industries, Inc. Tue Aug 23 04:45:29 2016 Page 1
ID:rMfbEJ_R5u6XmdIRC13avWymE9I-?Z?MC?iRbA3MfY?dcd_ZPNa6tROxmFmr0MCOoKyl4tK

Scale = 1:49.6

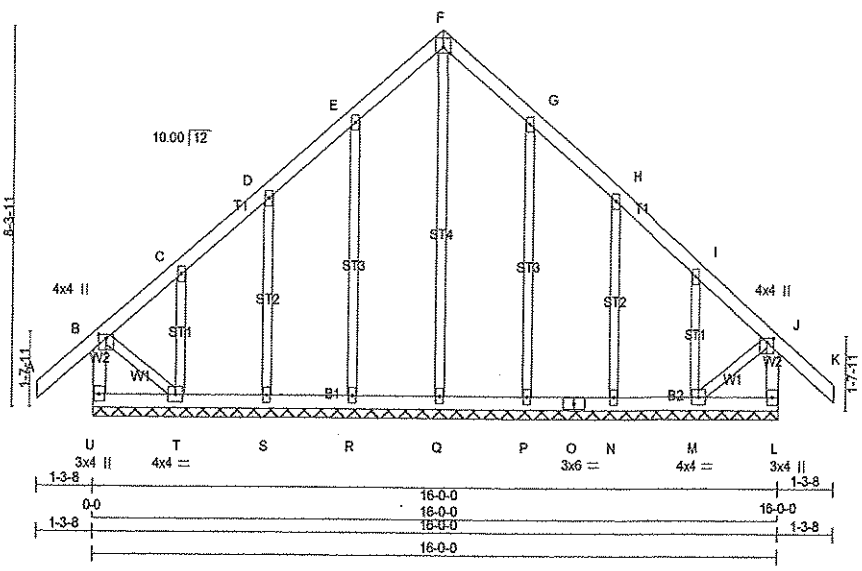

TOTAL WEIGHT = 80 lb
[M]

LUMBER
N. L. G. A. RULES

CHORDS	SIZE		LUMBER	DESCR.
U - B	2x4	DRY	No.2	SPF
A - F	2x4	DRY	No.2	SPF
F - K	2x4	DRY	No.2	SPF
L - J	2x4	DRY	No.2	SPF
U - O	2x4	DRY	No.2	SPF
O - L	2x4	DRY	No.2	SPF
ALL WEBS	2x3	DRY	No.2	SPF
ALL GABLE WEBS	2x3	DRY	No.2	SPF

DRY: SEASONED LUMBER.

GABLE STUDS SPACED AT 2-0-0 OC.

PLATES (table is in inches)

JT	TYPE	PLATES	W	LEN	Y	X
B	TMVW+p	MT20	4.0	4.0	1.00	2.00
C, D, E, G, H, I						
C	TMW+w	MT20	2.0	4.0		
F	TTW-p	MT20	4.0	4.0	1.50	2.00
J	TMVW+p	MT20	4.0	4.0	1.00	2.00
L	BMV1+p	MT20	3.0	4.0		
M	BMWW1-t	MT20	4.0	4.0		
N, P, Q, R, S						
N	BMW1+w	MT20	2.0	4.0		
O	BS-t	MT20	3.0	6.0		
T	BMWW1-t	MT20	4.0	4.0		
U	BMV1+p	MT20	3.0	4.0		

DIMENSIONS, SUPPORTS AND LOADINGS SPECIFIED BY FABRICATOR TO BE VERIFIED BY BUILDING DESIGNER

BEARINGS

THIS TRUSS DESIGNED FOR CONTINUOUS BEARINGS.

THIS TRUSS REQUIRES RIGID SHEATHING ON EXPOSED FACE.

BEARING MATERIAL TO BE SPF NO.2 OR BETTER AT JOINT(S)

BRACING
TOP CHORD TO BE SHEATHED OR MAX. PURLIN SPACING = 6.25 FT.
MAX. UNBRACED BOTTOM CHORD LENGTH = 10.00 FT. OR RIGID CEILING DIRECTLY APPLIED.

ALL PITCH BREAKS AND PERIMETER CORNER JOINTS MUST BE LATERALLY RESTRAINED.

LOADING
TOTAL LOAD CASES: (4)

CHORDS

MEMB. FR-TO	MAX. FACTORED FORCE (LBS)	FACTORED VERT. LOAD LC1 (PLF) FROM	TO	MAX CSI (LC)	MAX. UNBRAC LENGTH
U- B	-387 / 0	0.0	0.0	0.04 (1)	7.81
A- B	0 / 54	-122.2	-122.2	0.17 (1)	10.00
B- C	-76 / 0	-122.2	-122.2	0.16 (1)	6.25
C- D	-29 / 0	-122.2	-122.2	0.06 (1)	6.25
D- E	-27 / 0	-122.2	-122.2	0.07 (1)	6.25
E- F	-40 / 0	-122.2	-122.2	0.07 (1)	6.25
F- G	-40 / 0	-122.2	-122.2	0.07 (1)	6.25
G- H	-27 / 0	-122.2	-122.2	0.07 (1)	6.25
H- I	-29 / 0	-122.2	-122.2	0.06 (1)	6.25
I- J	-76 / 0	-122.2	-122.2	0.16 (1)	6.25
J- K	0 / 54	-122.2	-122.2	0.17 (1)	10.00
L- J	-387 / 0	0.0	0.0	0.04 (1)	7.81
U- T	0 / 0	-28.0	-28.0	0.03 (2)	10.00
T- S	0 / 28	-28.0	-28.0	0.03 (2)	10.00
S- R	0 / 23	-28.0	-28.0	0.02 (2)	10.00
R- Q	0 / 19	-28.0	-28.0	0.02 (2)	10.00
Q- P	0 / 19	-28.0	-28.0	0.02 (2)	10.00
P- O	0 / 23	-28.0	-28.0	0.02 (2)	10.00
O- N	0 / 23	-28.0	-28.0	0.02 (2)	10.00
N- M	0 / 28	-28.0	-28.0	0.03 (2)	10.00
M- L	0 / 0	-28.0	-28.0	0.03 (2)	10.00

WEBS

MEMB. FR-TO	MAX. FACTORED FORCE (LBS)	MAX CSI (LC)
Q- F	-175 / 0	0.23 (1)
R- E	-275 / 0	0.20 (1)
S- D	-248 / 0	0.09 (1)
T- C	-172 / 0	0.03 (1)
P- G	-275 / 0	0.20 (1)
N- H	-248 / 0	0.09 (1)
M- I	-172 / 0	0.03 (1)
B- T	0 / 40	0.01 (1)
M- J	0 / 40	0.01 (1)

DESIGN CRITERIA

SPECIFIED LOADS:

TOP CH.	LL	=	38.3	PSF
	DL	=	3.0	PSF
BOT CH.	LL	=	10.5	PSF
	DL	=	7.0	PSF
TOTAL LOAD		=	58.7	PSF

SPACING = 24.0 IN. C/C

THIS TRUSS IS DESIGNED FOR RESIDENTIAL OR SMALL BUILDING REQUIREMENTS OF PART 9, NBCC 2010

THIS DESIGN COMPLIES WITH:
- PART 9 OF OBC 2012 , BCBC 2012 , ABC 2014
- CSA 086-09
- TPIC 2011

DESIGN ASSUMPTIONS
-OVERHANG NOT TO BE ALTERED OR CUT OFF.

(55 % OF 54.4 P.S.F. G.S.L. PLUS 8.4 P.S.F. RAIN LOAD) EQUALS 38.3 P.S.F. SPECIFIED ROOF LIVE LOAD

~~CSI: TC=0.17 (J-K:1) , BC=0.03 (M-N:2) , WB=0.23 (F-Q:1) , SSI=0.10 (J-K:1)~~

DOL LUMBER=1.00 NAIL=1.00 LS BEND=1.10 COMP=1.10 SHEAR=1.10 TENS= 1.10

COMPANION LIVE LOAD FACTOR = 0.50

TRUSS PLATE MANUFACTURER IS NOT RESPONSIBLE FOR QUALITY CONTROL IN THE TRUSS MANUFACTURING PLANT .

NAIL VALUES

PLATE	GRIP(DRY) (PSI) MAX	MIN	SHEAR (PLI) MAX	MIN	SECTION (PLI) MAX	MIN
MT20	618	354	1667	822	2284	1656

PLATE PLACEMENT TOL. = 0.250 inches

PLATE ROTATION TOL. = 5.0 Deg.

JSI GRIP= 0.29 (F) (INPUT = 0.90)
JSI METAL= 0.07 (G) (INPUT = 1.00)

LICENSED PROFESSIONAL ENGINEER
82326
S. KATSOULAKOS
PROVINCE OF ONTARIO

DWG NO. TAM38465-16
STRUCTURAL
COMPONENT ONLY

JOB NAME	TRUSS NAME	QUANTITY	PLY	JOB DESC. 42067	DRWG NO.
272254	T101	1	2	TRUSS DESC.	

Tamarack Roof Truss, Burlington

Version 8.030 S Oct 5 2016 MiTek Industries, Inc. Thu Sep 07 11:45:03 2017 Page 1

ID:UIXETLnDSJY2kU33EXjJkwym?kt-VUDfKI6JIEJxdwMkGBRexWcFji6f3rj5VxqpV4yg2K

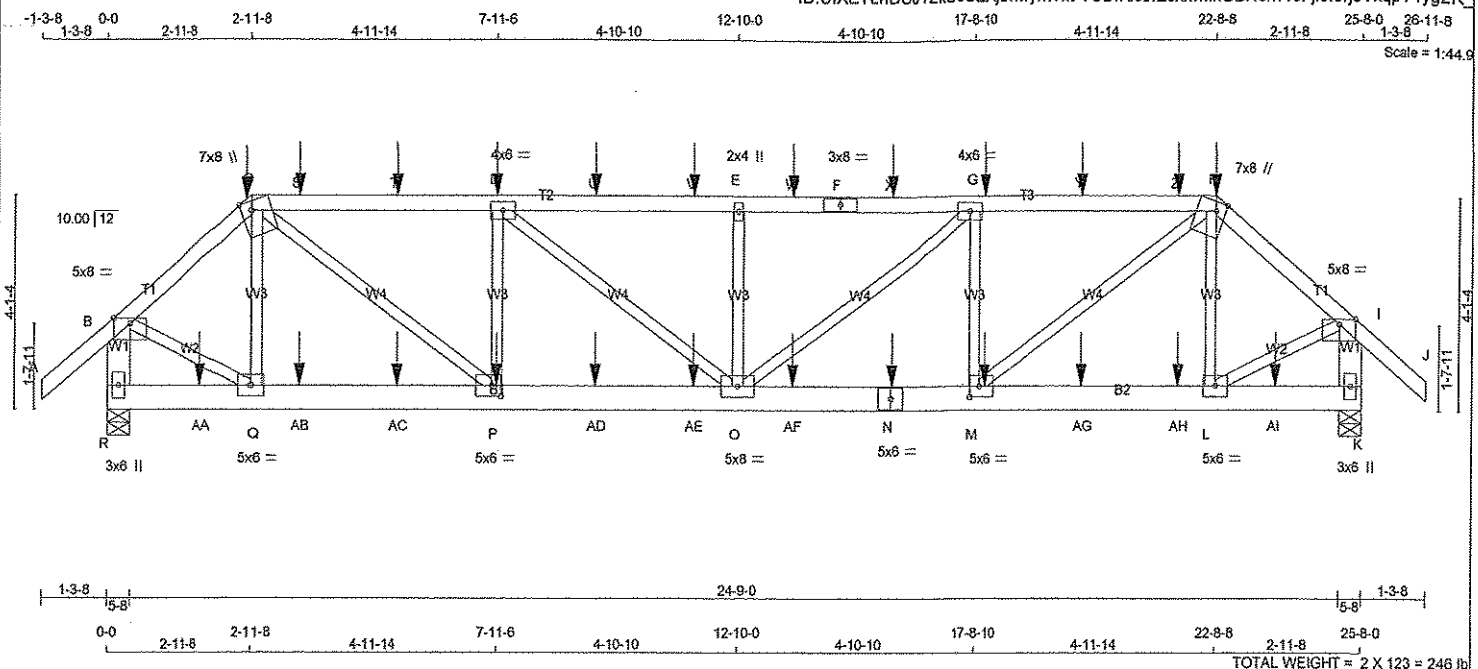

TOTAL WEIGHT = 2 X 123 = 246 lb

[M]

LUMBER

N. L. G. A. RULES

CHORDS	SIZE		LUMBER	DESCR.
A - C	2x4	DRY	No.2	SPF
C - F	2x4	DRY	No.2	SPF
F - H	2x4	DRY	No.2	SPF
H - J	2x4	DRY	No.2	SPF
R - B	2x6	DRY	No.2	SPF
K - I	2x6	DRY	No.2	SPF
R - N	2x6	DRY	No.2	SPF
N - K	2x6	DRY	No.2	SPF
ALL WEBS EXCEPT	2x3	DRY	No.2	SPF

DRY: SEASONED LUMBER.

DESIGN CONSISTS OF 2 TRUSSES BUILT SEPARATELY THEN FASTENED TOGETHER AS FOLLOWS:

CHORDS	#ROWS	SURFACE SPACING (IN)	LOAD(PLF)
TOP CHORDS : (0.122"X3") SPIRAL NAILS			
A- C	1	12	SIDE(61.0)
C- F	1	12	SIDE(61.0)
F- H	1	12	SIDE(61.0)
H- J	1	12	SIDE(61.0)
R- B	2	12	TOP
K- I	2	12	TOP
BOTTOM CHORDS : (0.122"X3") SPIRAL NAILS			
R- N	2	12	SIDE(183.1)
N- K	2	12	SIDE(183.1)
WEBS : (0.122"X3") SPIRAL NAILS			
2x3	1	6	

NAILS TO BE DRIVEN FROM ONE SIDE ONLY.

GIRDER NAILING ASSUMES NAILED HANGERS ARE FASTENED WITH MIN. 3-0 INCH NAILS.

TOP - COMPONENTS ARE LOADED FROM THE TOP AND MUST BE PLACED ON TOP EDGE OF ALL PLIES FOR THE LOAD TO BE TRANSFERRED TO EACH PLY.

SIDE - PLF SHOWN IS THE EQUIVALENT UDL APPLIED TO ONE SIDE THAT THE CORRESPONDING NAILING PATTERN SHALL BE CAPABLE OF TRANSFERING. REMAINING PLF MUST BE APPLIED ON THE OPPOSITE SIDE OR ON THE TOP.

PLATES (table is in inches)

JT	TYPE	PLATES	W	LEN	Y	X
B	TMW-p	MT20	5.0	8.0	Edge	
C	TTWW+m	MT20	7.0	8.0	Edge	2.25
D	TMWW-t	MT20	4.0	6.0		
E	TMW+w	MT20	2.0	4.0		
F	TS-t	MT20	3.0	8.0		
G	TMWW-t	MT20	4.0	6.0		
H	TTWW+m	MT20	7.0	8.0	Edge	2.25
I	TMW-p	MT20	5.0	8.0	Edge	
K	BMV1+p	MT20	3.0	6.0		
L	BMWW-t	MT20	5.0	6.0		
M	BMWW-t	MT20	5.0	6.0	2.50	2.25
N	BS-t	MT20	5.0	6.0		
O	BMWWW-t	MT20	5.0	8.0		
P	BMWW-t	MT20	5.0	6.0	2.50	2.25
Q	BMWW-t	MT20	5.0	6.0		
R	BMV1+p	MT20	3.0	6.0		

Edge - INDICATES REFERENCE CORNER OF PLATE TOUCHES EDGE OF CHORD.

DIMENSIONS, SUPPORTS AND LOADINGS SPECIFIED BY FABRICATOR TO BE VERIFIED BY BUILDING DESIGNER

BEARINGS

JT	FACTORED GROSS REACTION VERT	HORZ	MAXIMUM FACTORED GROSS REACTION DOWN	HORZ	UPLIFT	INPUT BRG IN-SX	REQRD BRG IN-SX
R	3296	0	3296	0	0	5-8	5-8
K	3318	0	3318	0	0	5-8	5-8

UNFACTORED REACTIONS

JT	1ST LCASE COMBINED	MAX/MIN. COMPONENT REACTIONS SNOW	LIVE	PERM.LIVE	WIND	DEAD	SOIL
R	2593	1662 / 0	480 / 0	0 / 0	0 / 0	450 / 0	0 / 0
K	2609	1674 / 0	482 / 0	0 / 0	0 / 0	453 / 0	0 / 0

BEARING MATERIAL TO BE SPF NO.2 OR BETTER AT JOINT(S) R, K

BRACING

TOP CHORD TO BE SHEATHED OR MAX. PURLIN SPACING = 3.60 FT.
MAX. UNBRACED BOTTOM CHORD LENGTH = 10.00 FT. OR RIGID CEILING DIRECTLY APPLIED.

ALL PITCH BREAKS AND PERIMETER CORNER JOINTS MUST BE LATERALLY RESTRAINED.

LOADING

TOTAL LOAD CASES: (4)

CHORDS

MEMB. FR-TO	MAX. FACTORED FORCE (LBS)	FACTORED VERT. LOAD LC1 (PLF) FROM	TO	MAX CSI (LC)	MAX. UNBRAC LENGTH
A- B	0 / 54	-122.2	-122.2	0.09 (1)	10.00
B- C	-3085 / 0	-122.2	-122.2	0.14 (1)	5.15
C- S	-4840 / 0	-122.2	-122.2	0.50 (1)	3.88
S- T	-4840 / 0	-122.2	-122.2	0.50 (1)	3.88
T- D	-4840 / 0	-122.2	-122.2	0.50 (1)	3.88
D- U	-5565 / 0	-122.2	-122.2	0.53 (1)	3.60
U- V	-5565 / 0	-122.2	-122.2	0.53 (1)	3.60
V- E	-5565 / 0	-122.2	-122.2	0.53 (1)	3.60
E- W	-5565 / 0	-122.2	-122.2	0.53 (1)	3.60
W- F	-5565 / 0	-122.2	-122.2	0.53 (1)	3.60
F- X	-5565 / 0	-122.2	-122.2	0.53 (1)	3.60
X- G	-5565 / 0	-122.2	-122.2	0.53 (1)	3.60
G- Y	-4849 / 0	-122.2	-122.2	0.50 (1)	3.87
Y- Z	-4849 / 0	-122.2	-122.2	0.50 (1)	3.87
Z- H	-4849 / 0	-122.2	-122.2	0.50 (1)	3.87
H- I	-3105 / 0	-122.2	-122.2	0.14 (1)	5.13
I- J	0 / 54	-122.2	-122.2	0.09 (1)	10.00
R- B	-3278 / 0	0.0	0.0	0.12 (1)	7.66
K- I	-3296 / 0	0.0	0.0	0.12 (1)	7.66
R-AA	0 / 0	-28.0	-28.0	0.06 (2)	10.00
AA- Q	0 / 0	-28.0	-28.0	0.06 (2)	10.00
Q-AB	0 / 2342	-28.0	-28.0	0.20 (1)	10.00
AB-AC	0 / 2342	-28.0	-28.0	0.20 (1)	10.00
AC- P	0 / 2342	-28.0	-28.0	0.20 (1)	10.00
P-AD	0 / 4840	-28.0	-28.0	0.38 (1)	10.00
AD-AE	0 / 4840	-28.0	-28.0	0.38 (1)	10.00
AE- O	0 / 4840	-28.0	-28.0	0.38 (1)	10.00
O-AF	0 / 4849	-28.0	-28.0	0.38 (1)	10.00
AF- N	0 / 4849	-28.0	-28.0	0.38 (1)	10.00
N- M	0 / 4849	-28.0	-28.0	0.38 (1)	10.00
M-AG	0 / 2357	-28.0	-28.0	0.20 (1)	10.00
AG-AH	0 / 2357	-28.0	-28.0	0.20 (1)	10.00
AH- L	0 / 2357	-28.0	-28.0	0.20 (1)	10.00
L-AI	0 / 0	-28.0	-28.0	0.06 (2)	10.00
AI- K	0 / 0	-28.0	-28.0	0.06 (2)	10.00

WEBS

MEMB. FR-TO	MAX. FACTORED FORCE (LBS)	MAX CSI (LC)
Q- C	-690 / 0	0.09 (1)
C- P	0 / 3112	0.39 (1)
P- D	-1639 / 0	0.21 (1)
D- O	0 / 912	0.11 (1)
O- E	-880 / 0	0.11 (1)
O- G	0 / 900	0.11 (1)
M- G	-1635 / 0	0.21 (1)
M- H	0 / 3105	0.38 (1)
L- H	-696 / 0	0.09 (1)
B- Q	0 / 2543	0.31 (1)
L- I	0 / 2559	0.32 (1)

LICENSED PROFESSIONAL ENGINEER
9-7-17
S. KATSOULAKOS
PROVINCE OF ONTARIO

DWG NO. TAM 45207-17
STRUCTURAL COMPONENT ONLY

DESIGN CRITERIA

*** SPECIAL LOADS ANALYSIS ***
GEOMETRY AND/OR BASIC LOADS CHANGED BY USER.
LOADS WERE DERIVED FROM USER INPUT
NO FURTHER MODIFICATIONS WERE MADE

SPECIFIED LOADS:

TOP CH.	LL	=	38.3	PSF
	DL	=	3.0	PSF
BOT CH.	LL	=	10.5	PSF
	DL	=	7.0	PSF
TOTAL LOAD		=	58.7	PSF

SPACING = 24.0 IN. C/C

LOADING IN FLAT SECTION BASED ON A SLOPE OF 6.00/12

*** NON STANDARD GIRDER ***
ADDT'L USER-DEFINED LOADS APPLIED TO ALL LOAD CASES.

THIS TRUSS IS DESIGNED FOR RESIDENTIAL OR SMALL BUILDING REQUIREMENTS OF PART 9, NBCC 2010

THIS DESIGN COMPLIES WITH:
- PART 9 OF OBC 2012 , BCBC 2012 , ABC 2014
- CSA 086-09
- TPIC 2011

(55 % OF 54.4 P.S.F. G.S.L. PLUS 8.4 P.S.F. RAIN LOAD) EQUALS 38.3 P.S.F. SPECIFIED ROOF LIVE LOAD

ALLOWABLE DEFL.(LL)= L/360 (0.86")
CALCULATED VERT. DEFL.(LL) = L/ 999 (0.13")
ALLOWABLE DEFL.(TL)= L/360 (0.86")
CALCULATED VERT. DEFL.(TL) = L/ 999 (0.20")

CSI: TC=0.53 (E-G:1) , BC=0.38 (M-O:1) , WB=0.39 (C-P:1) , SSI=0.22 (C-D:1)

DOL LUMBER=1.00 NAIL=1.00 LS BEND=1.00 COMP=1.00 SHEAR=1.00 TENS= 1.00

COMPANION LIVE LOAD FACTOR = 0.50

AUTOSOLVE HEELS OFF

TRUSS PLATE MANUFACTURER IS NOT RESPONSIBLE FOR QUALITY CONTROL IN THE TRUSS MANUFACTURING PLANT .

NAIL VALUES

PLATE	GRIP(DRY) (PSI) MAX	MIN	SHEAR (PLI) MAX	MIN	SECTION (PLI) MAX	MIN
MT20	618	354	1667	822	2284	1656

PLATE PLACEMENT TOL. = 0.250 inches

PLATE ROTATION TOL. = 5.0 Deg.

JSI GRIP= 0.66 (L) (INPUT = 0.90)
JSI METAL= 0.43 (N) (INPUT = 1.00)

CONTINUED ON PAGE 2

HANGERS NOTES

1) SPECIAL HANGER(S) OR CONNECTION(S) REQUIRED TO SUPPORT CONCENTRATED LOAD(S) 227.6 lbs FACTORED DOWN AT 2-11-8, 227.6 lbs FACTORED DOWN AT 22-8-8, 148.2 lbs FACTORED DOWN AT 3-11-4, 147.1 lbs FACTORED DOWN AT 5-11-4, 147.1 lbs FACTORED DOWN AT 7-11-4, 147.1 lbs FACTORED DOWN AT 9-11-4, 147.1 lbs FACTORED DOWN AT 11-11-4, 147.1 lbs FACTORED DOWN AT 13-11-4, 147.1 lbs FACTORED DOWN AT 15-11-4, 147.1 lbs FACTORED DOWN AT 17-11-4, AND 147.1 lbs FACTORED DOWN AT 19-11-4, AND 161.0 lbs FACTORED DOWN AT 21-11-4 ON TOP CHORD, AND 69.9 lbs FACTORED DOWN AT 1-11-4, 69.9 lbs FACTORED DOWN AT 3-11-4, 69.9 lbs FACTORED DOWN AT 5-11-4, 69.9 lbs FACTORED DOWN AT 7-11-4, 69.9 lbs FACTORED DOWN AT 9-11-4, 69.9 lbs FACTORED DOWN AT 11-11-4, 69.9 lbs FACTORED DOWN AT 13-11-4, 69.9 lbs FACTORED DOWN AT 15-11-4, 69.9 lbs FACTORED DOWN AT 17-11-4, 69.9 lbs FACTORED DOWN AT 19-11-4, AND 69.9 lbs FACTORED DOWN AT 21-11-4, AND 69.9 lbs FACTORED DOWN AT 23-11-4 ON BOTTOM CHORD. DESIGN FOR UNSPECIFIED CONNECTION(S) IS DELEGATED TO THE BUILDING DESIGNER.

FACTORED CONCENTRATED LOADS (LBS)

JT	LOC.	LC1	MAX-	MAX+	FACE	DIR.	TYPE
C	2-11-8	-228	-228	---	FRONT	VERT	TOTAL
D	7-11-4	-147	-147	---	FRONT	VERT	TOTAL
G	17-11-4	-147	-147	---	FRONT	VERT	TOTAL
H	22-8-8	-228	-228	---	FRONT	VERT	TOTAL
M	17-11-4	-40	-70	---	FRONT	VERT	TOTAL
N	15-11-4	-40	-70	---	FRONT	VERT	TOTAL
P	7-11-4	-40	-70	---	FRONT	VERT	TOTAL
S	3-11-4	-148	-148	---	FRONT	VERT	TOTAL
T	5-11-4	-147	-147	---	FRONT	VERT	TOTAL
U	9-11-4	-147	-147	---	FRONT	VERT	TOTAL
V	11-11-4	-147	-147	---	FRONT	VERT	TOTAL
W	13-11-4	-147	-147	---	FRONT	VERT	TOTAL
X	15-11-4	-147	-147	---	FRONT	VERT	TOTAL
Y	19-11-4	-147	-147	---	FRONT	VERT	TOTAL
Z	21-11-4	-161	-161	---	FRONT	VERT	TOTAL
AA	1-11-4	-40	-70	---	FRONT	VERT	TOTAL
AB	3-11-4	-40	-70	---	FRONT	VERT	TOTAL
AC	5-11-4	-40	-70	---	FRONT	VERT	TOTAL
AD	9-11-4	-40	-70	---	FRONT	VERT	TOTAL
AE	11-11-4	-40	-70	---	FRONT	VERT	TOTAL
AF	13-11-4	-40	-70	---	FRONT	VERT	TOTAL
AG	19-11-4	-40	-70	---	FRONT	VERT	TOTAL
AH	21-11-4	-40	-70	---	FRONT	VERT	TOTAL
AI	23-11-4	-40	-70	---	FRONT	VERT	TOTAL

LICENSED PROFESSIONAL ENGINEER
S. KATSOULAKOS
PROVINCE OF ONTARIO

DWG NO. TAM45207-17
STRUCTURAL
COMPONENT ONLY

JOB NAME	TRUSS NAME	QUANTITY	PLY	JOB DESC. 42067	DRWG NO.
272254	T101Z	1	2	TRUSS DESC.	

Tamarack Roof Truss, Burlington

Version 8.030 S Oct 5 2016 MiTek Industries, Inc. Thu Sep 07 11:45:04 2017 Page 1

ID:UIXETLnDSJY2kU33EXjJkwym?kt-zhn1Y57x2YRoN4xwpvytUk9NQ6M?oGIFkbZM1Wyg2Jz

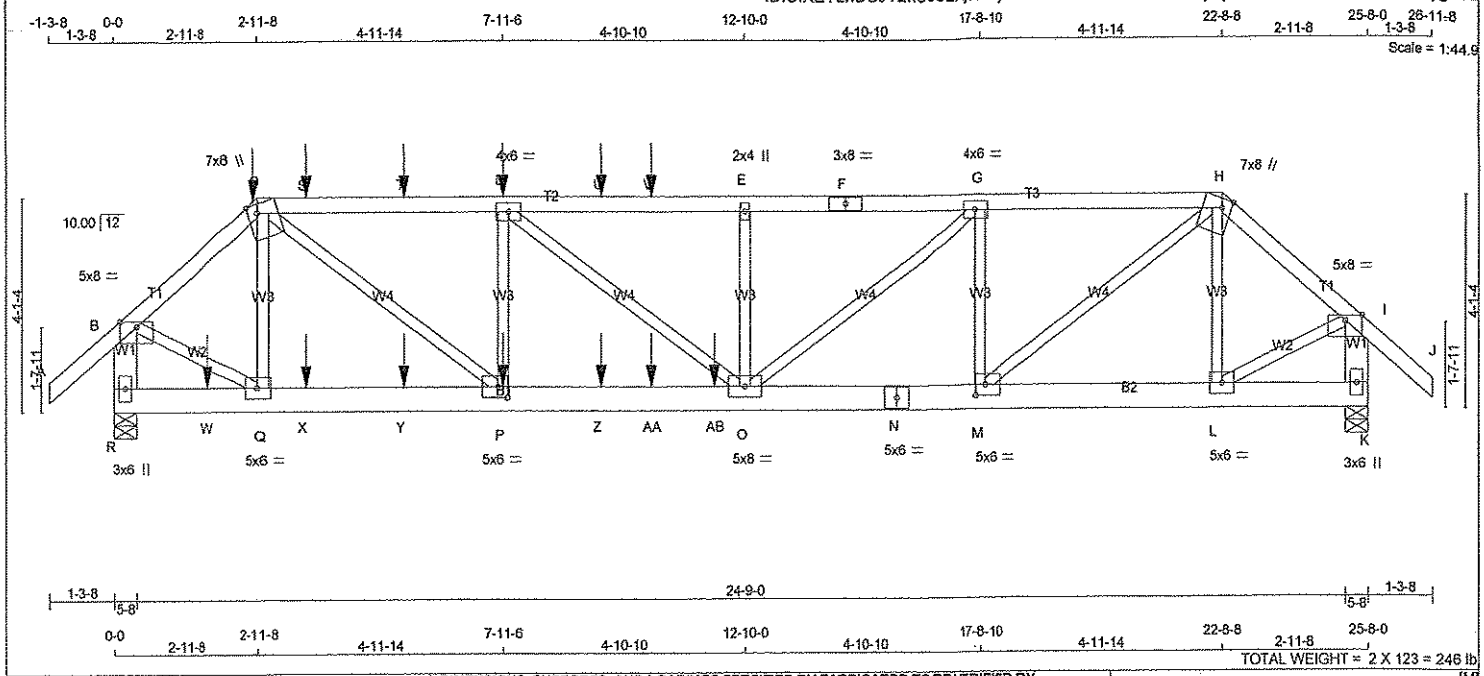

TOTAL WEIGHT = 2 X 123 = 246 lb

[M]

LUMBER

N. L. G. A. RULES

CHORDS	SIZE		LUMBER	DESCR.
A - C	2x4	DRY	No.2	SPF
C - F	2x4	DRY	No.2	SPF
F - H	2x4	DRY	No.2	SPF
H - J	2x4	DRY	No.2	SPF
R - B	2x6	DRY	No.2	SPF
K - I	2x6	DRY	No.2	SPF
R - N	2x6	DRY	No.2	SPF
N - K	2x6	DRY	No.2	SPF
ALL WEBS EXCEPT	2x3	DRY	No.2	SPF

DRY: SEASONED LUMBER.

DESIGN CONSISTS OF 2 TRUSSES BUILT SEPARATELY THEN FASTENED TOGETHER AS FOLLOWS:

CHORDS	#ROWS	SURFACE SPACING (IN)	LOAD(PLF)
TOP CHORDS : (0.122"X3") SPIRAL NAILS			
A- C	1	12	SIDE(61.0)
C- F	1	12	SIDE(61.0)
F- H	1	12	TOP
H- J	1	12	TOP
R- B	2	12	TOP
K- I	2	12	TOP
BOTTOM CHORDS : (0.122"X3") SPIRAL NAILS			
R- N	2	12	SIDE(183.1)
N- K	2	12	TOP
WEBS : (0.122"X3") SPIRAL NAILS			
2x3	1	6	

NAILS TO BE DRIVEN FROM ONE SIDE ONLY.

GIRDER NAILING ASSUMES NAILED HANGERS ARE FASTENED WITH MIN. 3-0 INCH NAILS.

TOP - COMPONENTS ARE LOADED FROM THE TOP AND MUST BE PLACED ON TOP EDGE OF ALL PLIES FOR THE LOAD TO BE TRANSFERRED TO EACH PLY.

SIDE - PLF SHOWN IS THE EQUIVALENT UDL APPLIED TO ONE SIDE THAT THE CORRESPONDING NAILING PATTERN SHALL BE CAPABLE OF TRANSFERING. REMAINING PLF MUST BE APPLIED ON THE OPPOSITE SIDE OR ON THE TOP.

PLATES (table is in inches)

JT	TYPE	PLATES	W	LEN	Y	X
B	TMWW-p	MT20	5.0	8.0	Edge	
C	TTWW+m	MT20	7.0	8.0	Edge	2.25
D	TMWW-t	MT20	4.0	6.0		
E	TMW+w	MT20	2.0	4.0		
F	TS-t	MT20	3.0	8.0		
G	TMWW-t	MT20	4.0	6.0		
H	TTWW+m	MT20	7.0	8.0	Edge	2.25
I	TMWW-p	MT20	5.0	8.0	Edge	
K	BMV1+p	MT20	3.0	6.0		
L	BMWW-t	MT20	5.0	6.0		
M	BMWW-t	MT20	5.0	6.0	2.50	2.25
N	BS-t	MT20	5.0	6.0		
O	BMWWW-t	MT20	5.0	8.0		
P	BMWW-t	MT20	5.0	6.0	2.50	2.25
Q	BMWW-t	MT20	5.0	6.0		
R	BMV1+p	MT20	3.0	6.0		

Edge - INDICATES REFERENCE CORNER OF PLATE TOUCHES EDGE OF CHORD.

DIMENSIONS, SUPPORTS AND LOADINGS SPECIFIED BY FABRICATOR TO BE VERIFIED BY BUILDING DESIGNER

BEARINGS

JT	FACTORED GROSS REACTION VERT	HORZ	MAXIMUM FACTORED GROSS REACTION DOWN	HORZ	UPLIFT	INPUT BRG IN-SX	REQRD BRG IN-SX
R	4071	0	4071	0	0	5-8	5-8
K	3390	0	3390	0	0	5-8	5-8

UNFACTORED REACTIONS

1ST LCASE — MAX /MIN. COMPONENT REACTIONS

JT	COMBINED	SNOW	LIVE	PERM.LIVE	WIND	DEAD	SOIL
R	3163	2096 / 0	542 / 0	0 / 0	0 / 0	525 / 0	0 / 0
K	2611	1769 / 0	422 / 0	0 / 0	0 / 0	420 / 0	0 / 0

BEARING MATERIAL TO BE SPF NO.2 OR BETTER AT JOINT(S) R, K

BRACING

TOP CHORD TO BE SHEATHED OR MAX. PURLIN SPACING = 2.84 FT.
MAX. UNBRACED BOTTOM CHORD LENGTH = 10.00 FT. OR RIGID CEILING DIRECTLY APPLIED.

ALL PITCH BREAKS AND PERIMETER CORNER JOINTS MUST BE LATERALLY RESTRAINED.

LOADING

TOTAL LOAD CASES: (4)

CHORDS

MEMB. FR-TO	MAX. FACTORED FORCE (LBS)	FACTORED VERT. LOAD (PLF) FROM	TO	LC1	MAX CSI (LC)	MAX. UNBRAC LENGTH
A- B	0 / 54	-122.2	-122.2	0.09 (1)	10.00	
B- C	-3888 / 0	-122.2	-122.2	0.16 (1)	4.67	
C- S	-6555 / 0	-122.2	-122.2	0.63 (1)	3.23	
S- T	-6555 / 0	-122.2	-122.2	0.63 (1)	3.23	
T- D	-6555 / 0	-122.2	-122.2	0.63 (1)	3.23	
D- U	-7907 / 0	-122.2	-122.2	0.73 (1)	2.84	
U- V	-7907 / 0	-122.2	-122.2	0.73 (1)	2.84	
V- E	-7907 / 0	-122.2	-122.2	0.73 (1)	2.84	
E- F	-7907 / 0	-122.2	-122.2	0.53 (1)	3.12	
F- G	-7907 / 0	-122.2	-122.2	0.53 (1)	3.12	
G- H	-5627 / 0	-122.2	-122.2	0.38 (1)	3.80	
H- I	-3206 / 0	-122.2	-122.2	0.14 (1)	5.07	
I- J	0 / 54	-122.2	-122.2	0.09 (1)	10.00	
R- B	-4040 / 0	0.0	0.0	0.15 (1)	7.08	
K- I	-3392 / 0	0.0	0.0	0.13 (1)	7.57	
R- W	0 / 0	-28.0	-28.0	0.05 (2)	10.00	
W- Q	0 / 0	-28.0	-28.0	0.05 (2)	10.00	
Q- X	0 / 2948	-28.0	-28.0	0.26 (1)	10.00	
X- Y	0 / 2948	-28.0	-28.0	0.26 (1)	10.00	
Y- P	0 / 2948	-28.0	-28.0	0.26 (1)	10.00	
P- Z	0 / 6555	-28.0	-28.0	0.76 (1)	10.00	
Z- AA	0 / 6555	-28.0	-28.0	0.76 (1)	10.00	
AA- AB	0 / 6555	-28.0	-28.0	0.76 (1)	10.00	
AB- O	0 / 6555	-28.0	-28.0	0.76 (1)	10.00	
O- N	0 / 5627	-28.0	-28.0	0.48 (1)	10.00	
N- M	0 / 5627	-28.0	-28.0	0.48 (1)	10.00	
M- L	0 / 2432	-28.0	-28.0	0.21 (1)	10.00	
L- K	0 / 0	-28.0	-28.0	0.05 (1)	10.00	

WEBS

MEMB. FR-TO	MAX. FACTORED FORCE (LBS)	MAX CSI (LC)
Q- C	-998 / 0	0.13 (1)
C- P	0 / 4493	0.56 (1)
P- D	-2172 / 0	0.28 (1)
D- O	0 / 1701	0.21 (1)
O- E	-678 / 0	0.09 (1)
O- G	0 / 2869	0.36 (1)
M- G	-2387 / 0	0.30 (1)
M- H	0 / 3960	0.49 (1)
L- H	-765 / 0	0.10 (1)
B- Q	0 / 3204	0.40 (1)
L- I	0 / 2642	0.33 (1)

FACTORED CONCENTRATED LOADS (LBS)

JT	LOC.	LC1	MAX-	MAX+	FACE	DIR.	TYPE
C	2-11-8	-228	-228	---	FRONT	VERT	TOTAL
D	7-11-4	-147	-147	---	BACK	VERT	TOTAL
P	7-11-4	-40	-70	---	BACK	VERT	TOTAL
S	3-11-4	-148	-148	---	BACK	VERT	TOTAL
T	5-11-4	-147	-147	---	BACK	VERT	TOTAL
U	9-11-4	-147	-147	---	BACK	VERT	TOTAL
V	10-11-4	-147	-147	---	BACK	VERT	TOTAL
W	1-11-4	-40	-70	---	BACK	VERT	TOTAL

DESIGN CRITERIA

*** SPECIAL LOADS ANALYSIS ***
GEOMETRY AND/OR BASIC LOADS CHANGED BY USER.
LOADS WERE DERIVED FROM USER INPUT
NO FURTHER MODIFICATIONS WERE MADE

SPECIFIED LOADS:

TOP CH.	LL	=	38.3	PSF
	DL	=	3.0	PSF
BOT CH.	LL	=	10.5	PSF
	DL	=	7.0	PSF
TOTAL LOAD		=	58.7	PSF

SPACING = 24.0 IN. C/C

LOADING IN FLAT SECTION BASED ON A SLOPE OF 6.00/12

*** NON STANDARD GIRDER ***
ADDT'L USER-DEFINED LOADS APPLIED TO ALL LOAD CASES.

THIS TRUSS IS DESIGNED FOR RESIDENTIAL OR SMALL BUILDING REQUIREMENTS OF PART 9, NBCC 2010

THIS DESIGN COMPLIES WITH:
- PART 9 OF OBC 2012 , BCBC 2012 , ABC 2014
- CSA 086-09
- TPIC 2011

(55 % OF 54.4 P.S.F. G.S.L. PLUS 8.4 P.S.F. RAIN LOAD) EQUALS 38.3 P.S.F. SPECIFIED ROOF LIVE LOAD

ALLOWABLE DEFL.(LL)= L/360 (0.86")
CALCULATED VERT. DEFL.(LL) = L/ 999 (0.20")
ALLOWABLE DEFL.(TL)= L/360 (0.86")
CALCULATED VERT. DEFL.(TL) = L/ 999 (0.30")

CSI: TC=0.73 (D-E:1) , BC=0.76 (O-P:1) , WB=0.56 (C-P:1) , SSI=0.64 (O-P:1)

DOL LUMBER=1.00 NAIL=1.00 LS BEND=1.00 COMP=1.00 SHEAR=1.00 TENS= 1.00

COMPANION LIVE LOAD FACTOR = 0.50

AUTOSOLVE HEELS OFF

TRUSS PLATE MANUFACTURER IS NOT RESPONSIBLE FOR QUALITY CONTROL IN THE TRUSS MANUFACTURING PLANT .

NAIL VALUES

PLATE	GRIP(DRY) (PSI) MAX	MIN	SHEAR (PLI) MAX	MIN	SECTION (PLI) MAX	MIN
MT20	618	354	1667	822	2284	1656

PLATE PLACEMENT TOL. = 0.250 inches

PLATE ROTATION TOL. = 5.0 Deg.

JSI GRIP= 0.87 (P) (INPUT = 0.90)
JSI METAL= 0.65 (N) (INPUT = 1.00)

LICENSED PROFESSIONAL ENGINEER
9217
S. KATSOULAKOS
PROVINCE OF ONTARIO

DWG NO. TAM 4520317
STRUCTURAL
COMPONENT ONLY

CONTINUED ON PAGE 2

HANGERS NOTES

1) SPECIAL HANGER(S) OR CONNECTION(S) REQUIRED TO SUPPORT CONCENTRATED LOAD(S) 227.6 lbs FACTORED DOWN AT 2-11-8, 148.2 lbs FACTORED DOWN AT 3-11-4, 147.1 lbs FACTORED DOWN AT 5-11-4, 147.1 lbs FACTORED DOWN AT 7-11-4, AND 147.1 lbs FACTORED DOWN AT 9-11-4, AND 147.1 lbs FACTORED DOWN AT 10-11-4 ON TOP CHORD, AND 69.9 lbs FACTORED DOWN AT 1-11-4, 69.9 lbs FACTORED DOWN AT 3-11-4, 69.9 lbs FACTORED DOWN AT 5-11-4, 69.9 lbs FACTORED DOWN AT 7-11-4, 69.9 lbs FACTORED DOWN AT 9-11-4, AND 69.9 lbs FACTORED DOWN AT 10-11-4, AND 2062.9 lbs FACTORED DOWN AT 12-2-8 ON BOTTOM CHORD. DESIGN FOR UNSPECIFIED CONNECTION(S) IS DELEGATED TO THE BUILDING DESIGNER.

FACTORED CONCENTRATED LOADS (LBS)

JT	LOC.	LC1	MAX-	MAX+	FACE	DIR.	TYPE
X	3-11-4	-40	-70	---	BACK	VERT	TOTAL
Y	5-11-4	-40	-70	---	BACK	VERT	TOTAL
Z	9-11-4	-40	-70	---	BACK	VERT	TOTAL
AA	10-11-4	-40	-70	---	BACK	VERT	TOTAL
AB	12-2-8	-2063	-2063	---	BACK	VERT	TOTAL

LICENSED PROFESSIONAL ENGINEER
9717
S. KATSOULAKOS
PROVINCE OF ONTARIO

DWG NO. TAM4520B-17
STRUCTURAL
COMPONENT ONLY

P62/2

JOB NAME	TRUSS NAME	QUANTITY	PLY	JOB DESC. 42067	DRWG NO.
272255	T101Z1	1	2	TRUSS DESC.	

Tamarack Roof Truss, Burlington

Version 8.030 S Oct 5 2016 MiTek Industries, Inc. Thu Sep 07 11:46:18 2017 Page 1

ID:UiXETLnDSJY2kU33EXjJkwym?kt-owF?4P0MdHmIFSb99RHDULD4gxYi7kw8I6VHdEyg2Ip

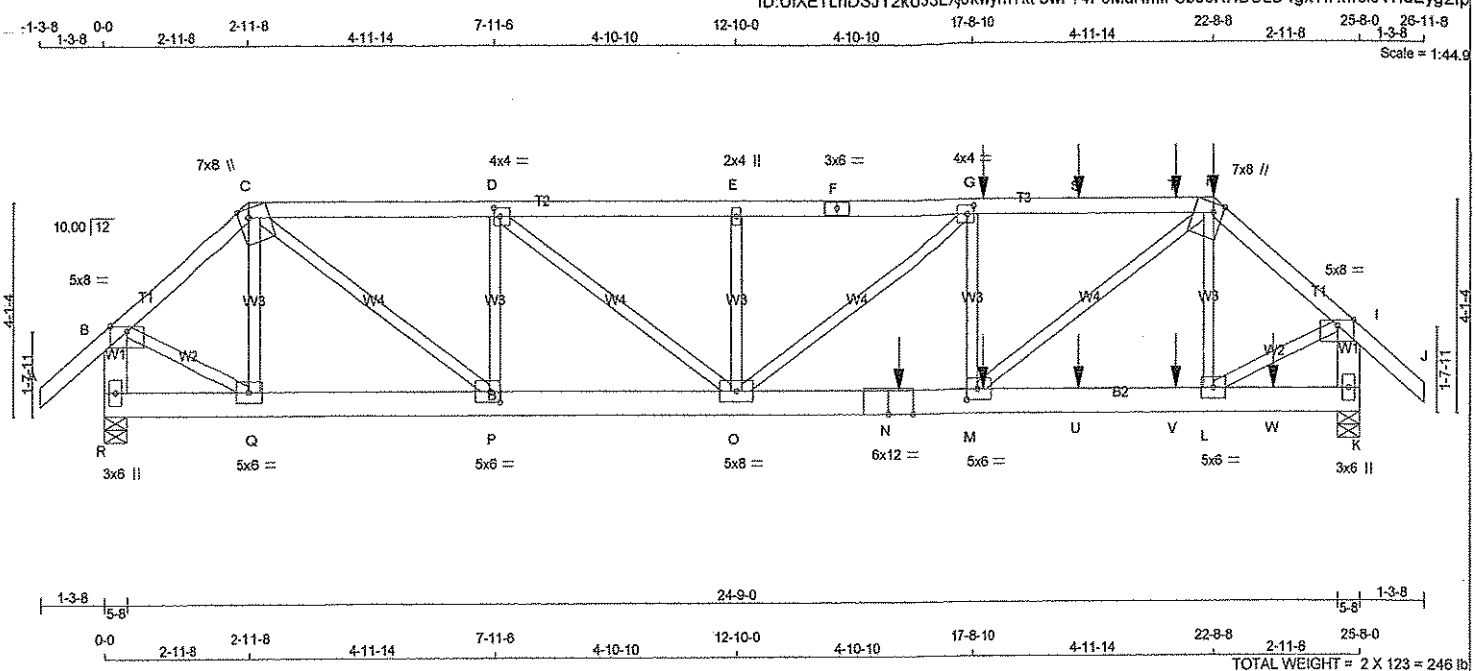

TOTAL WEIGHT = 2 X 123 = 246 lb

[M]

LUMBER

N. L. G. A. RULES

CHORDS	SIZE		LUMBER	DESCR.
A - C	2x4	DRY	No.2	SPF
C - F	2x4	DRY	No.2	SPF
F - H	2x4	DRY	No.2	SPF
H - J	2x4	DRY	No.2	SPF
R - B	2x6	DRY	No.2	SPF
K - I	2x6	DRY	No.2	SPF
R - N	2x6	DRY	No.2	SPF
N - K	2x6	DRY	No.2	SPF
ALL WEBS EXCEPT	2x3	DRY	No.2	SPF

DRY: SEASONED LUMBER.

DESIGN CONSISTS OF 2 TRUSSES BUILT SEPARATELY THEN FASTENED TOGETHER AS FOLLOWS:

CHORDS	#ROWS	SURFACE SPACING (IN)	LOAD(PLF)
TOP CHORDS : (0.122"X3") SPIRAL NAILS			
A- C	1	12	TOP
C- F	1	12	TOP
F- H	1	12	SIDE(61.0)
H- J	1	12	SIDE(61.0)
R- B	2	12	TOP
K- I	2	12	TOP
BOTTOM CHORDS : (0.122"X3") SPIRAL NAILS			
R- N	2	12	SIDE(0.0)
N- K	2	12	SIDE(183.1)
WEBS : (0.122"X3") SPIRAL NAILS			
2x3	1	6	

NAILS TO BE DRIVEN FROM ONE SIDE ONLY.

GIRDER NAILING ASSUMES NAILED HANGERS ARE FASTENED WITH MIN. 3-0 INCH NAILS.

TOP - COMPONENTS ARE LOADED FROM THE TOP AND MUST BE PLACED ON TOP EDGE OF ALL PLIES FOR THE LOAD TO BE TRANSFERRED TO EACH PLY.

SIDE - PLF SHOWN IS THE EQUIVALENT UDL APPLIED TO ONE SIDE THAT THE CORRESPONDING NAILING PATTERN SHALL BE CAPABLE OF TRANSFERING. REMAINING PLF MUST BE APPLIED ON THE OPPOSITE SIDE OR ON THE TOP.

PLATES (table is in inches)

JT	TYPE	PLATES	W	LEN	Y	X
B	TMW-p	MT20	5.0	8.0	Edge	
C	TTWW+m	MT20	7.0	8.0	Edge	2.25
D	TMWW-t	MT20	4.0	4.0	2.00	1.50
E	TMW+w	MT20	2.0	4.0		
F	TS-t	MT20	3.0	6.0		
G	TMWW-t	MT20	4.0	4.0	2.00	1.50
H	TTWW+m	MT20	7.0	8.0	Edge	2.25
I	TMW-p	MT20	5.0	8.0	Edge	
K	BMV1+p	MT20	3.0	6.0		
L	BMWW-t	MT20	5.0	6.0		
M	BMWW-t	MT20	5.0	6.0	2.50	2.50
N	BS-t	MT20	6.0	12.0		
O	BMWWW-t	MT20	5.0	8.0		
P	BMWW-t	MT20	5.0	6.0	2.50	2.50
Q	BMWW-t	MT20	5.0	6.0		
R	BMV1+p	MT20	3.0	6.0		

Edge - INDICATES REFERENCE CORNER OF PLATE TOUCHES EDGE OF CHORD.

DIMENSIONS, SUPPORTS AND LOADINGS SPECIFIED BY FABRICATOR TO BE VERIFIED BY BUILDING DESIGNER

BEARINGS

JT	FACTORED GROSS REACTION VERT	HORZ	MAXIMUM FACTORED GROSS REACTION DOWN	HORZ	UPLIFT	INPUT BRG IN-SX	REQRD BRG IN-SX
R	2944	0	2944	0	0	5-8	5-8
K	3906	0	3906	0	0	5-8	5-8

UNFACTORED REACTIONS

JT	1ST LCASE COMBINED	MAX./MIN. COMPONENT REACTIONS SNOW	LIVE	PERM.LIVE	WIND	DEAD	SOIL
R	2270	1534 / 0	369 / 0	0 / 0	0 / 0	366 / 0	0 / 0
K	3032	2014 / 0	515 / 0	0 / 0	0 / 0	502 / 0	0 / 0

BEARING MATERIAL TO BE SPF NO.2 OR BETTER AT JOINT(S) R, K

BRACING

TOP CHORD TO BE SHEATHED OR MAX. PURLIN SPACING = 3.43 FT.
MAX. UNBRACED BOTTOM CHORD LENGTH = 10.00 FT. OR RIGID CEILING DIRECTLY APPLIED.

ALL PITCH BREAKS AND PERIMETER CORNER JOINTS MUST BE LATERALLY RESTRAINED.

LOADING

TOTAL LOAD CASES: (4)

CHORDS

MEMB. FR-TO	MAX. FACTORED FORCE (LBS)	FACTORED VERT. LOAD (PLF) FROM	TO	LC1	MAX CSI (LC)	MAX. UNBRAC LENGTH
A- B	0 / 54	-122.2	-122.2	0.09 (1)	10.00	
B- C	-2734 / 0	-122.2	-122.2	0.13 (1)	5.40	
C- D	-4678 / 0	-122.2	-122.2	0.35 (1)	4.13	
D- E	-6388 / 0	-122.2	-122.2	0.45 (1)	3.52	
E- F	-6388 / 0	-122.2	-122.2	0.51 (1)	3.43	
F- G	-6388 / 0	-122.2	-122.2	0.51 (1)	3.43	
G- S	-6255 / 0	-122.2	-122.2	0.54 (1)	3.43	
S- T	-6255 / 0	-122.2	-122.2	0.54 (1)	3.43	
T- H	-6255 / 0	-122.2	-122.2	0.54 (1)	3.43	
H- I	-3666 / 0	-122.2	-122.2	0.15 (1)	4.79	
I- J	0 / 54	-122.2	-122.2	0.09 (1)	10.00	
R- B	-2945 / 0	0.0	0.0	0.11 (1)	7.81	
K- I	-3829 / 0	0.0	0.0	0.14 (1)	7.23	
R- Q	0 / 0	-28.0	-28.0	0.05 (1)	10.00	
Q- P	0 / 2075	-28.0	-28.0	0.20 (1)	10.00	
P- O	0 / 4679	-28.0	-28.0	0.47 (1)	10.00	
O- N	0 / 6255	-28.0	-28.0	0.99 (1)	10.00	
N- M	0 / 6255	-28.0	-28.0	0.99 (1)	10.00	
M- U	0 / 2775	-28.0	-28.0	0.41 (1)	10.00	
U- V	0 / 2775	-28.0	-28.0	0.41 (1)	10.00	
V- L	0 / 2775	-28.0	-28.0	0.41 (1)	10.00	
L- W	0 / 0	-28.0	-28.0	0.04 (3)	10.00	
W- K	0 / 0	-28.0	-28.0	0.04 (3)	10.00	

WEBS

MEMB. FR-TO	MAX. FACTORED FORCE (LBS)	MAX CSI (LC)
Q- C	-619 / 0	0.08 (1)
C- P	0 / 3243	0.40 (1)
P- D	-1983 / 0	0.25 (1)
D- O	0 / 2159	0.27 (1)
O- E	-513 / 0	0.07 (1)
O- G	0 / 167	0.02 (1)
M- G	-1058 / 0	0.13 (1)
M- H	0 / 4335	0.54 (1)
L- H	-1092 / 0	0.14 (1)
B- Q	0 / 2253	0.28 (1)
L- I	0 / 3021	0.37 (1)

FACTORED CONCENTRATED LOADS (LBS)

JT	LOC.	LC1	MAX-	MAX+	FACE	DIR	TYPE
G	17-11-4	-147	-147	---	FRONT	VERT	TOTAL
H	22-8-8	-228	-228	---	FRONT	VERT	TOTAL
M	17-11-4	-40	-70	---	FRONT	VERT	TOTAL
N	16-1-8	-1814	-1814	---	FRONT	VERT	TOTAL
S	19-11-4	-147	-147	---	FRONT	VERT	TOTAL
T	21-11-4	-161	-161	---	FRONT	VERT	TOTAL
U	19-11-4	-40	-70	---	FRONT	VERT	TOTAL
V	21-11-4	-40	-70	---	FRONT	VERT	TOTAL
W	23-11-4	-40	-70	---	FRONT	VERT	TOTAL

LICENSED PROFESSIONAL ENGINEER
9-7-17
S. KATSOULAKOS
PROVINCE OF ONTARIO

DWG NO. TAM45213-17
STRUCTURAL
COMPONENT ONLY

DESIGN CRITERIA

*** SPECIAL LOADS ANALYSIS ***
GEOMETRY AND/OR BASIC LOADS CHANGED BY USER.
LOADS WERE DERIVED FROM USER INPUT
NO FURTHER MODIFICATIONS WERE MADE

SPECIFIED LOADS:

TOP CH.	LL	=	38.3	PSF
	DL	=	3.0	PSF
BOT CH.	LL	=	10.5	PSF
	DL	=	7.0	PSF
TOTAL LOAD		=	58.7	PSF

SPACING = 24.0 IN. C/C

LOADING IN FLAT SECTION BASED ON A SLOPE OF 6.00/12

*** NON STANDARD GIRDER ***
ADDT'L USER-DEFINED LOADS APPLIED TO ALL LOAD CASES.

THIS TRUSS IS DESIGNED FOR RESIDENTIAL OR SMALL BUILDING REQUIREMENTS OF PART 9, NBCC 2010

THIS DESIGN COMPLIES WITH:
- PART 9 OF OBC 2012 , BCBC 2012 , ABC 2014
- CSA 086-09
- TPIC 2011

(55 % OF 54.4 P.S.F. G.S.L. PLUS 8.4 P.S.F. RAIN LOAD) EQUALS 38.3 P.S.F. SPECIFIED ROOF LIVE LOAD

ALLOWABLE DEFL.(LL)= L/360 (0.86")
CALCULATED VERT. DEFL.(LL) = L/ 999 (0.19")
ALLOWABLE DEFL.(TL)= L/360 (0.86")
CALCULATED VERT. DEFL.(TL) = L/ 999 (0.28")

CSI: TC=0.54 (G-H:1) , BC=0.99 (M-O:1) , WB=0.54 (H-M:1) , SSI=0.41 (M-O:1)

DOL LUMBER=1.00 NAIL=1.00 LS BEND=1.00 COMP=1.00 SHEAR=1.00 TENS= 1.00

COMPANION LIVE LOAD FACTOR = 0.50

AUTOSOLVE HEELS OFF

TRUSS PLATE MANUFACTURER IS NOT RESPONSIBLE FOR QUALITY CONTROL IN THE TRUSS MANUFACTURING PLANT .

NAIL VALUES

PLATE	GRIP(DRY) (PSI) MAX	MIN	SHEAR (PLI) MAX	MIN	SECTION (PLI) MAX	MIN
MT20	618	354	1667	822	2284	1656

PLATE PLACEMENT TOL. = 0.250 inches

PLATE ROTATION TOL. = 5.0 Deg.

JSI GRIP= 0.89 (P) (INPUT = 0.90)
JSI METAL= 0.88 (N) (INPUT = 1.00)

P6/6

CONTINUED ON PAGE 2

HANGERS NOTES

1) SPECIAL HANGER(S) OR CONNECTION(S) REQUIRED TO SUPPORT CONCENTRATED LOAD(S) 227.6 lbs FACTORED DOWN AT 22-8-8, 147.1 lbs FACTORED DOWN AT 17-11-4, AND 147.1 lbs FACTORED DOWN AT 19-11-4, AND 161.0 lbs FACTORED DOWN AT 21-11-4 ON TOP CHORD, AND 1813.6 lbs FACTORED DOWN AT 16-1-8, 69.9 lbs FACTORED DOWN AT 17-11-4, 69.9 lbs FACTORED DOWN AT 19-11-4, AND 69.9 lbs FACTORED DOWN AT 21-11-4, AND 69.9 lbs FACTORED DOWN AT 23-11-4 ON BOTTOM CHORD. DESIGN FOR UNSPECIFIED CONNECTION(S) IS DELEGATED TO THE BUILDING DESIGNER.

LICENSED PROFESSIONAL ENGINEER
9717
S. KATSOULAKOS
PROVINCE OF ONTARIO

DWG NO. TAM45213-17
STRUCTURAL
COMPONENT ONLY

TECHNICAL BULLETIN

HGUS – Double Shear Joist Hangers

SIMPSON Strong-Tie®

All HGUS hangers have double shear nailing. This patented innovation distributes the load through two points on each joist nail for greater strength. It also allows the use of fewer nails, faster installation and the use of common nails for all connections. Do not bend or remove tabs.

MATERIAL: 12 gauge

FINISH: G90 galvanized

DESIGN:

- Factored resistances are in accordance with CSA O86-14
- Uplift resistances have been increased 15%. No further increase is permitted.
- Wood shear is not considered in the factored resistances given. The specifier must ensure that the joist and header capacities are capable of withstanding these loads.

INSTALLATION:

- Use all specified fasteners
- Nails: 16d = 0.162" dia x 3½" long common wire
- Double shear nails must be driven at an angle through the joist or truss into the header to achieve the table loads
- Not designed for welded or nailer applications

OPTIONS:

- See current catalogue for options

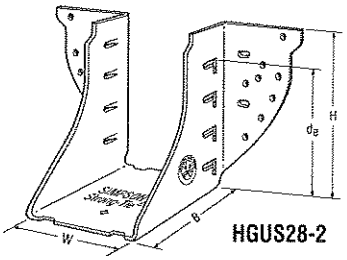

HGUS28-2

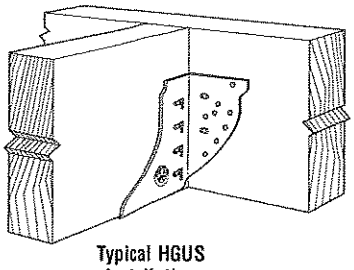

Typical HGUS Installation

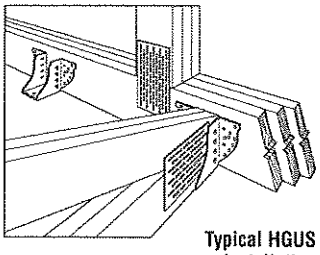

Typical HGUS Installation (Truss Designer to provide fastener quantity for connecting multiple members together)

Model No.	Ga	Dimensions (in)				Fasteners		Factored Resistance (lbs)			
								D.Fir-L		S-P-F	
		W	H	B	d_e[1]	Face	Joist	Uplift (K_D=1.15)	Normal (K_D=1.00)	Uplift (K_D=1.15)	Normal (K_D=1.00)
HGUS26	12	1⅝	5⅜	5	4 5/32	20-16d	8-16d	2685	6625	2685	5700
HGUS26-2	12	3 5/16	5 7/16	4	4⅛	20-16d	8-16d	4385	8950	3100	6355
HGUS26-3	12	4 15/16	5½	4	4⅛	20-16d	8-16d	4385	8950	3100	6355
HGUS26-4	12	6 9/16	5 7/16	4	4⅛	20-16d	8-16d	4385	8950	3100	6355
HGUS28	12	1⅝	7⅛	5	6⅛	36-16d	12-16d	3310	7675	3100	6900
HGUS28-2	12	3 5/16	7 3/16	4	6⅛	36-16d	12-16d	6070	12980	4310	9215
HGUS28-3	12	4 15/16	7¼	4	6⅜	36-16d	12-16d	6070	12980	4310	9215
HGUS28-4	12	6 9/16	7 3/16	4	6⅛	36-16d	12-16d	6070	12980	4310	9215
HGU210-2	12	3 5/16	9 3/16	4	8⅛	46-16d	16-16d	6840	14645	4855	10400
HGUS210-3	12	4 15/16	9¼	4	8⅜	46-16d	16-16d	6840	14645	4855	10400
HGUS210-4	12	6 9/16	9 3/16	4	8⅛	46-16d	16-16d	6840	14645	4855	10400
HGUS212-4	12	6 9/16	10⅝	4	10⅛	56-16d	20-16d	7640	14995	5425	10645
HGUS214-4	12	6 9/16	12⅝	4	11⅛	66-16d	22-16d	10130	16400	7195	11645

1. d_e is the distance from the seat of the hanger to the highest joist nail.

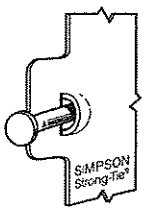

Dome Double Shear Nailing prevents tabs breaking off (available on some models).

U.S. Patent 5,603,580

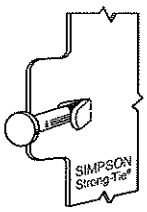

Double Shear Nailing Side View. Do not bend tab back.

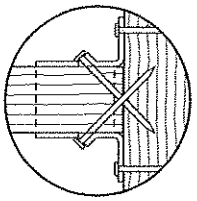

Double Shear Nailing Top View.

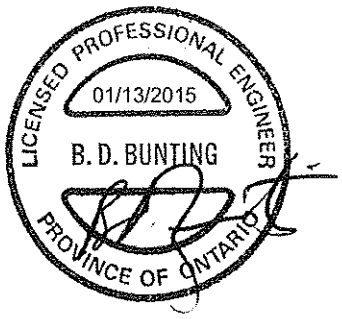

LIMIT STATES DESIGN

This technical bulletin is effective until December 31, 2016, and reflects information available as of January 1, 2015. This information is updated periodically and should not be relied upon after December 31, 2016; contact Simpson Strong-Tie for current information and limited warranty or see www.strongtie.com.

©2015 Simpson Strong-Tie Company Inc.

800-999-5099
www.strongtie.com

TECHNICAL BULLETIN

HUS/LJS – Double Shear Joist Hangers

SIMPSON Strong-Tie®

All hangers have double shear nailing. This patented innovation distributes the load through two points on each joist nail for greater strength. It also allows the use of fewer nails, faster installation and the use of common nails for all connections. Do not bend or remove tabs.

MATERIAL: See table

FINISH: G90 galvanized

DESIGN:

- Factored resistances are in accordance with CSA O86-14
- Uplift resistances have been increased 15% No further increase is permitted
- Wood shear is not considered in the factored resistances given. The specifier must ensure that the joist and header capacities are capable of withstanding these loads.

INSTALLATION:

- Use all specified fasteners
- Nails: 16d = 0.162" dia. x 3½" long common wire
- Double shear nails must be driven at an angle through the joist or truss into the header to achieve the table loads
- Not designed for welded or nailer applications

OPTIONS:

- See current catalogue for options

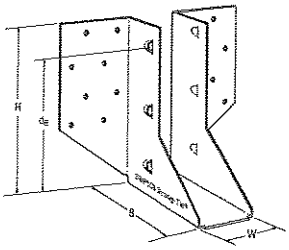

LJS26DS

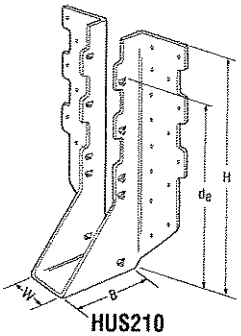

HUS210
(HUS26, HUS28, similar)

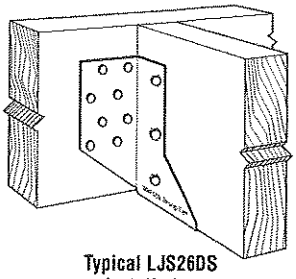

Typical LJS26DS Installation

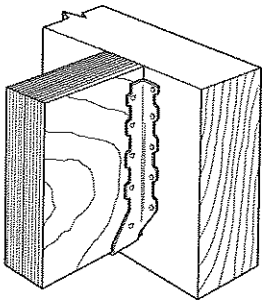

Typical HUS Installation

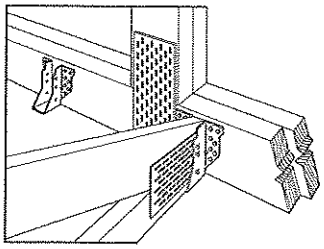

Typical HUS Installation (Truss Designer to provide fastener quantity for connecting multiple members together)

Model No.	Ga	Dimensions (in)				Fasteners		Factored Resistance (lbs)			
								D.Fir-L		S-P-F	
		W	H	B	d_e[1]	Face	Joist	Uplift (K_D=1.15)	Normal (K_D=1.00)	Uplift (K_D=1.15)	Normal (K_D=1.00)
LJS26DS	18	1 9/16	5	3½	4⅝	16-16d	6-16d	2055	4265	1460	4115
HUS26	16	1⅝	5⅜	3	3 15/16	14-16d	6-16d	2705	4940	2065	3875
HUS28	16	1⅝	7 3/32	3	6 3/32	22-16d	8-16d	3605	5365	2675	4345
HUS210	16	1⅝	9 3/32	3	7 31/32	30-16d	10-16d	4505	5795	4010	4740
HUS1.81/10	16	1 13/16	9	3	8	30-16d	10-16d	4505	6450	4010	5200

1. d_e is the distance from the seat of the hanger to the highest joist nail.

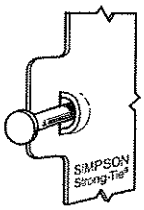

Dome Double Shear Nailing prevents tabs breaking off (available on some models).

U.S. Patent 5,603,580

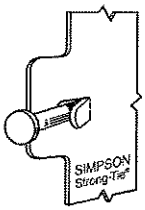

Double Shear Nailing Side View. Do not bend tab back.

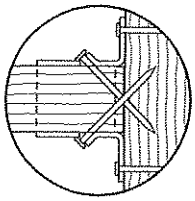

Double Shear Nailing Top View.

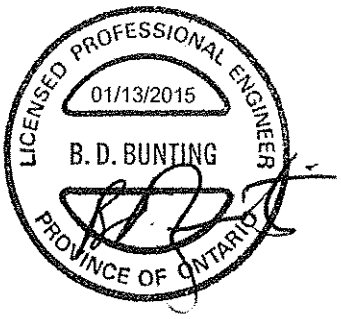

LIMIT STATES DESIGN

This technical bulletin is effective until December 31, 2016, and reflects information available as of January 1, 2015. This information is updated periodically and should not be relied upon after December 31, 2016; contact Simpson Strong-Tie for current information and limited warranty or see www.strongtie.com.

© 2015 Simpson Strong-Tie Company Inc.

T-SPECHUS15 1/15 exp. 12/16

800-999-5099
www.strongtie.com

LUS – Double Shear Joist Hangers

SIMPSON Strong-Tie®

All LUS hangers have double shear nailing. This patented innovation distributes the load through two points on each joist nail for greater strength. It also allows the use of fewer nails, faster installation and the use of common nails for all connections.

MATERIAL: 18 gauge

FINISH: G90 galvanized

DESIGN:

- Factored resistances are in accordance with CSA O86-14
- Uplift resistances have been increased 15%. No further increase is permitted.
- Wood shear is not considered in the factored resistances given. The specifier must ensure that the joist and header capacities are capable of withstanding these loads.

INSTALLATION:

- Use all specified fasteners
- Nails: 16d = 0.162" dia. x 3½" long common wire, 10d = 0.148" x 3" long common wire.
- Double shear nails must be driven at an angle through the joist or truss into the header to achieve the table loads
- Not designed for welded or nailer applications

OPTIONS:

- These hangers cannot be modified.

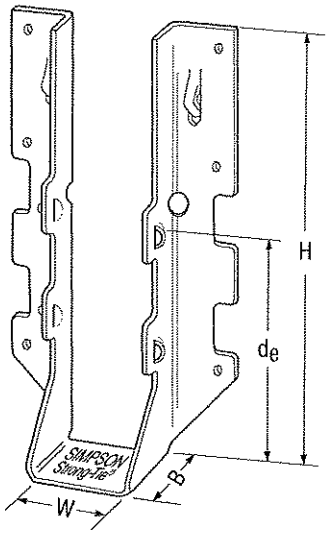

LUS28

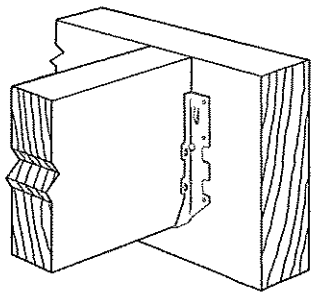

Typical LUS Installation

Model No.	Ga	Dimensions (in)				Fasteners		Factored Resistance (lbs)			
								D.Fir-L		S-P-F	
		W	H	B	d_e[1]	Face	Joist	Uplift (K_D=1.15)	Normal (K_D=1.00)	Uplift (K_D=1.15)	Normal (K_D=1.00)
LUS24	18	1 9/16	3 1/8	1 3/4	1 15/16	4-10d	2-10d	710	1630	645	1155
LUS24-2	18	3 1/8	3 1/8	2	1 13/16	4-16d	2-16d	835	2020	590	1435
LUS26	18	1 9/16	4 3/4	1 3/4	3 5/8	4-10d	4-10d	1420	2170	1290	1630
LUS26-2	18	3 1/8	4 7/8	2	4	4-16d	4-16d	1720	2595	1545	1920
LUS26-3	18	4 5/8	4 3/16	2	3 1/4	4-16d	4-16d	1720	2595	1545	2340
LUS28	18	1 9/16	6 5/8	1 3/4	3 3/4	6-10d	4-10d	1420	2520	1290	1790
LUS28-2	18	3 1/8	7	2	4	6-16d	4-16d	1720	3325	1545	2575
LUS28-3	18	4 5/8	6 1/4	2	3 1/4	6-16d	4-16d	1720	3325	1545	2375
LUS210	18	1 9/16	7 13/16	1 3/4	3 7/8	8-10d	4-10d	1420	2785	1290	2210
LUS210-2	18	3 1/8	9	2	6	8-16d	6-16d	2580	4500	2320	3195
LUS210-3	18	4 5/8	8 3/16	2	5 1/4	8-16d	6-16d	2580	3345	2320	2375

1. d_e is the distance from the seat of the hanger to the highest joist nail.

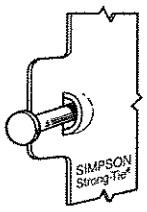

Dome Double Shear Nailing prevents tabs breaking off (available on some models).

U.S. Patent 5,603,580

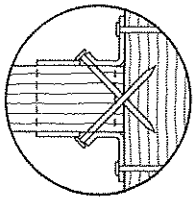

Double Shear Nailing Top View.

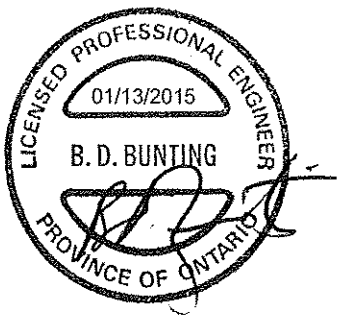

LIMIT STATES DESIGN

This technical bulletin is effective until December 31, 2016, and reflects information available as of January 1, 2015. This information is updated periodically and should not be relied upon after December 31, 2016; contact Simpson Strong-Tie for current information and limited warranty or see www.strongtie.com.

© 2015 Simpson Strong-Tie Company Inc.

800-999-5099
www.strongtie.com

MICRO CITY
ENGINEERING SERVICES INC.

TEL: (519) 287 - 2242

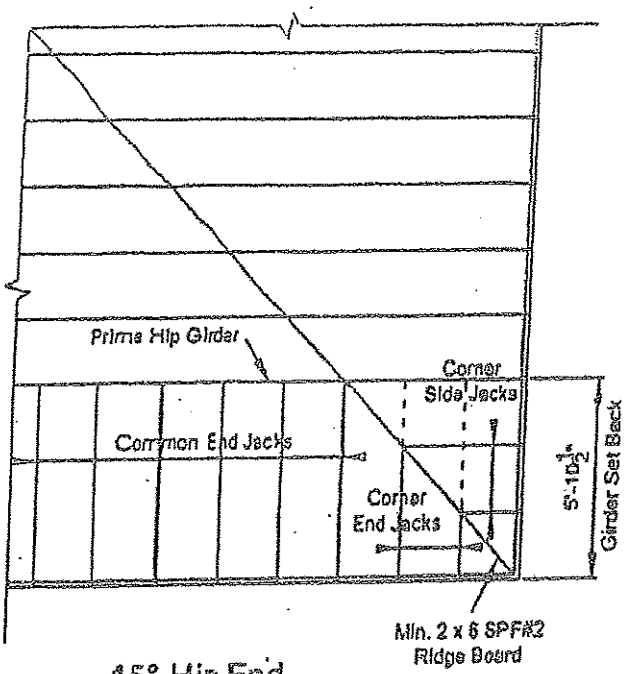

45° Hip End

LUMBER SPECIFICATION

TOP CHORD : 2 x 4 SPF#2

BOTTOM CHORD : 2 x 4 SPF#2

WEBS : 2 x 3 SPF#2

UNLESS OTHERWISE SHOWN

DESIGN LOAD:

TOP CHORD LIVE LOAD	: 34.8 P.S.F.
TOP CHORD DEAD LOAD	: 3.0 P.S.F.
BOTTOM CHORD LIVE LOAD	: 0.0 P.S.F.
BOTTOM CHORD DEAD LOAD	: 7.0 P.S.F.
TOTAL LOAD	: 44.8 P.S.F.

DWG NO TAM 3495.14 R1
STRUCTURAL COMPONENT ONLY

LICENSED PROFESSIONAL ENGINEER
1-2014
S. KATSOULAKOS
PROVINCE OF ONTARIO

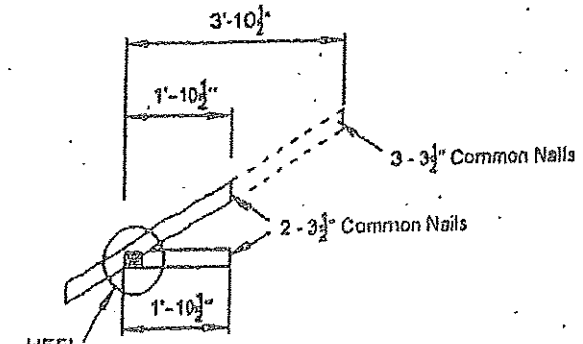

Corner Side Jacks

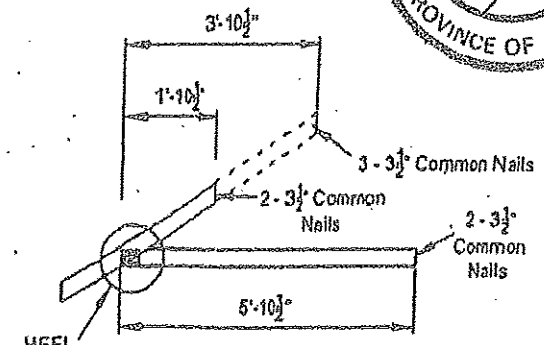

Corner End Jacks

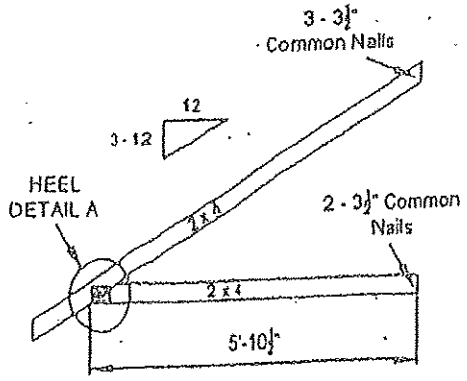

Common End Jacks

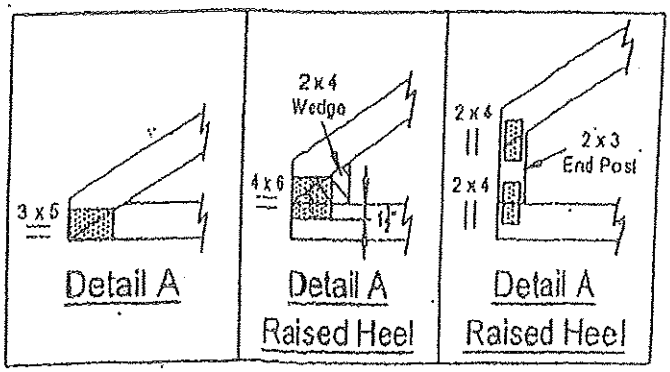

Detail A | Detail A Raised Heel | Detail A Raised Heel

NOTE: DESIGN CONFORMS TO PART 9, O.B.C. 2012 (LIMIT STATES DESIGN)
(TO BE INCLUDED AND USED AS PART OF A FULL TRUSS ENGINEERING PACKAGE)

MICRO CITY ENGINEERING SERVICES INC.

TEL: (519) 287 - 2242

R.R. #1, P.O. BOX 61, GLENCOE, ONTARIO, N0L 1M0

LUMBER SPECIFICATION

TOP CHORD : 2 x 4 SPF#2
BOTTOM CHORD : 2 x 4 SPF#2
WEBS : 2 x 3 SPF#2
UNLESS OTHERWISE SHOWN

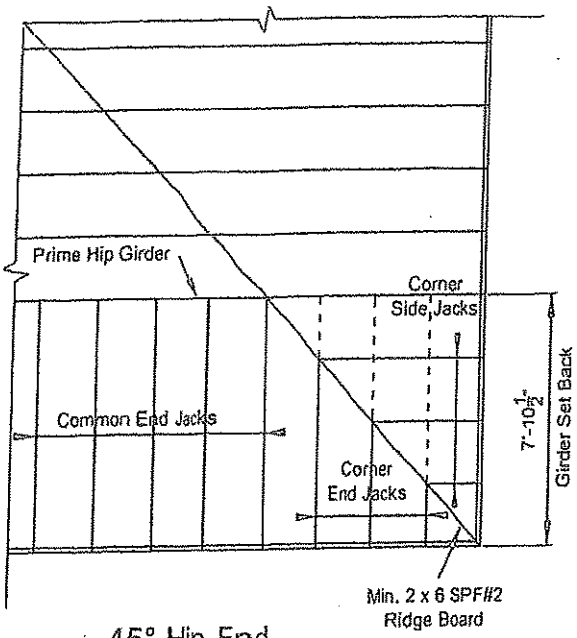

45° Hip End

DESIGN LOAD:

TOP CHORD LIVE LOAD	: 34.8 P.S.F.
TOP CHORD DEAD LOAD	: 3.0 P.S.F.
BOTTOM CHORD LIVE LOAD	: 0.0 P.S.F.
BOTTOM CHORD DEAD LOAD	: 7.0 P.S.F.
TOTAL LOAD	: 44.8 P.S.F.

DWG NO TAM 3503.14
STRUCTURAL
COMPONENT ONLY

LICENSED PROFESSIONAL ENGINEER
1-2014
S. KATSOULAKOS
PROVINCE OF ONTARIO

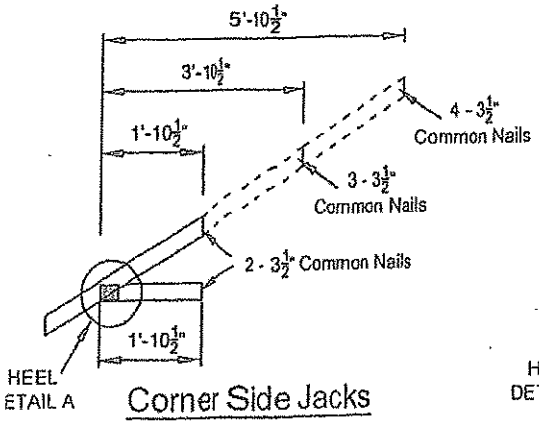

Corner Side Jacks

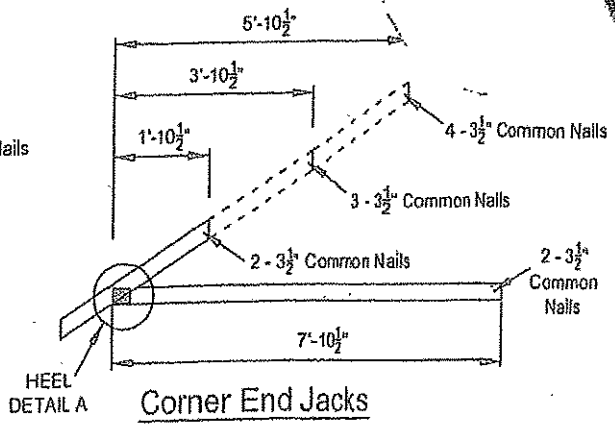

Corner End Jacks

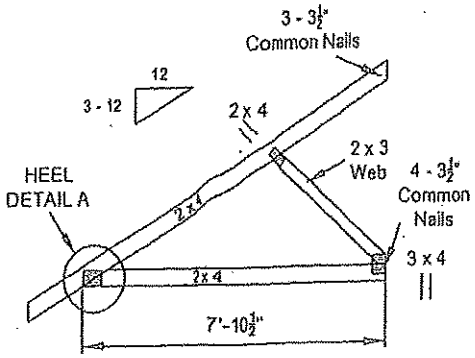

Common End Jacks

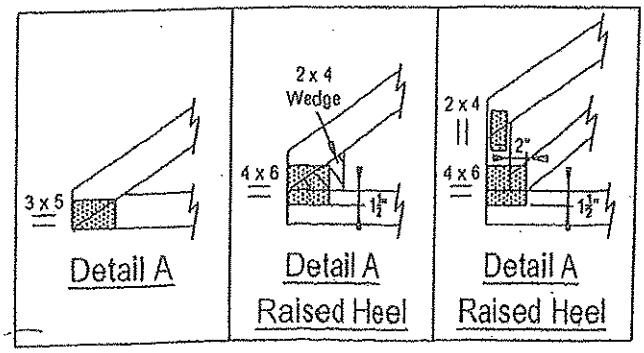

NOTE: DESIGN CONFORMS TO PART 9, O.B.C. 2012 (LIMIT STATES DESIGN)
(TO BE INCLUDED AND USED AS PART OF A FULL TRUSS ENGINEERING PACKAGE)

Symbols

PLATE LOCATION AND ORIENTATION

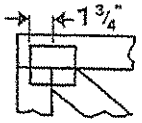

Center plate on joint unless x, y offsets are indicated. Dimensions are in ft-in-sixteenths or mm. Apply plates to both sides of truss and fully embed teeth.

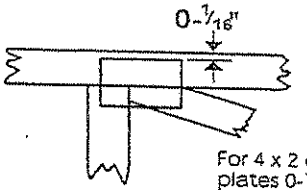

For 4 x 2 orientation, locate plates 0-1/16" from outside edge of truss.

This symbol indicates the required direction of slots in connector plates.

*Plate location details available in MiTek software or upon request.

PLATE SIZE

4 X 4

The first dimension is the plate width measured perpendicular to slots. Second dimension is the length parallel to slots.

LATERAL BRACING LOCATION

Indicated by symbol shown and/or by text in the bracing section of the output. Use T, I or Eliminator bracing if indicated.

BEARING

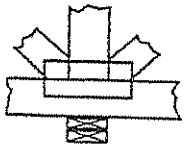

Indicates location where bearings (supports) occur. Icons vary but reaction section indicates joint number where bearings occur.

Industry Standards:

TPIC: Truss Design Procedures and Specifications for Light Metal Plate Connected Wood Trusses

DSB-89: Design Standard for Bracing.

BCSI: Building Component Safety Information, Guide to Good Practice for Handling, Installing & Bracing of Metal Plate Connected Wood Trusses.

Numbering System

6-4-8 dimensions shown in ft-in-sixteenths or mm (Drawings not to scale)

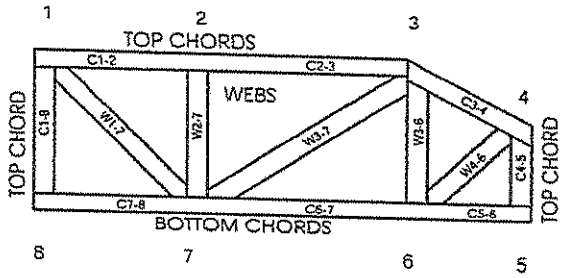

JOINTS ARE GENERALLY NUMBERED/LETTERED CLOCKWISE AROUND THE TRUSS STARTING AT THE JOINT FARTHEST TO THE LEFT.

CHORDS AND WEBS ARE IDENTIFIED BY END JOINT NUMBERS/LETTERS.

PRODUCT CODE APPROVALS

CCMC Reports:

11996-L, 10319-L, 13270-L, 12591-R

© 2007 MiTek® All Rights Reserved

MiTek®

POWER TO PERFORM.™

MiTek Engineering Reference Sheet: MII-7473C rev. 10-'08

General Safety Notes

Failure to Follow Could Cause Property Damage or Personal Injury

1. Additional stability bracing for truss system, e.g. diagonal or X-bracing, is always required. See BCSI.
2. Truss bracing must be designed by an engineer. For wide truss spacing, individual lateral braces themselves may require bracing, or alternative T, I, or Eliminator bracing should be considered.
3. Never exceed the design loading shown and never stack materials on inadequately braced trusses.
4. Provide copies of this truss design to the building designer, erection supervisor, property owner and all other interested parties.
5. Cut members to bear tightly against each other.
6. Place plates on each face of truss at each joint and embed fully. Knots and wane at joint locations are regulated by TPIC.
7. Design assumes trusses will be suitably protected from the environment in accord with TPIC.
8. Unless otherwise noted, moisture content of lumber shall not exceed 19% at time of fabrication.
9. Unless expressly noted, this design is not applicable for use with fire retardant, preservative treated, or green lumber.
10. Camber is a non-structural consideration and is the responsibility of truss fabricator. General practice is to camber for dead load deflection.
11. Plate type, size, orientation and location dimensions indicated are minimum plating requirements.
12. Lumber used shall be of the species and size, and in all respects, equal to or better than that specified.
13. Top chords must be sheathed or purlins provided at spacing indicated on design.
14. Bottom chords require lateral bracing at 10 ft. spacing, or less, if no ceiling is installed, unless otherwise noted.
15. Connections not shown are the responsibility of others.
16. Do not cut or alter truss member or plate without prior approval of an engineer.
17. Install and load vertically unless indicated otherwise.
18. Use of green or treated lumber may pose unacceptable environmental, health or performance risks. Consult with project engineer before use.
19. Review all portions of this design (front, back, words and pictures) before use. Reviewing pictures alone is not sufficient.
20. Design assumes manufacture in accordance with TPIC Quality Criteria.

MICRO CITY
ENGINEERING SERVICES INC.

TEL: (519) 287 - 2242

R.R. #1, P.O. BOX 61, GLENCOE, ONTARIO, NOL 1M0

CONVENTIONAL VALLEY FRAMING DETAIL

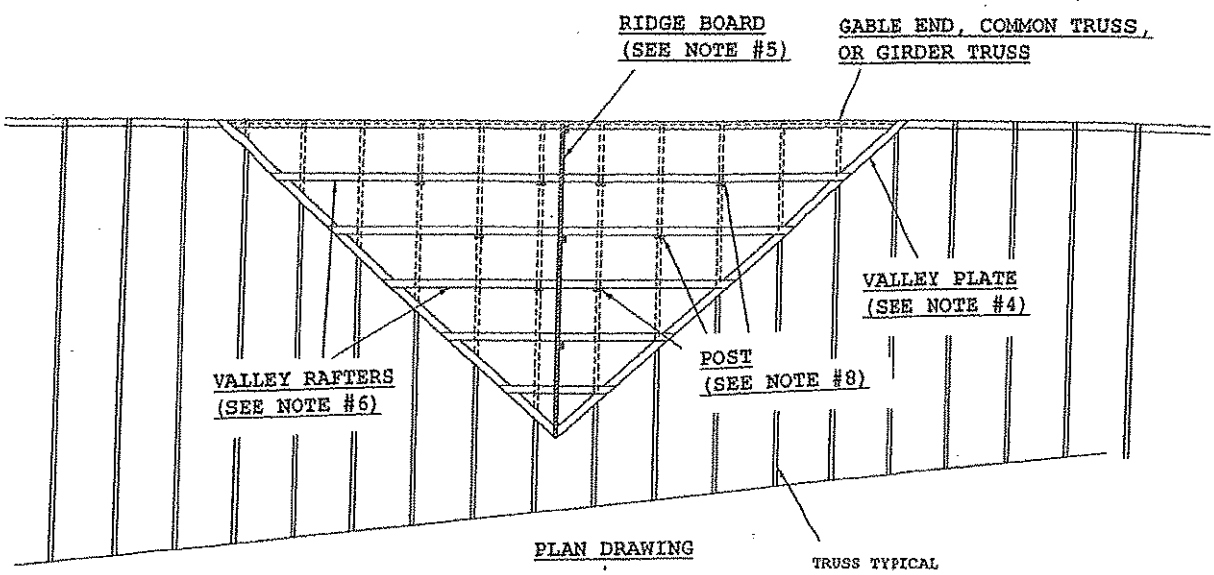

PLAN DRAWING

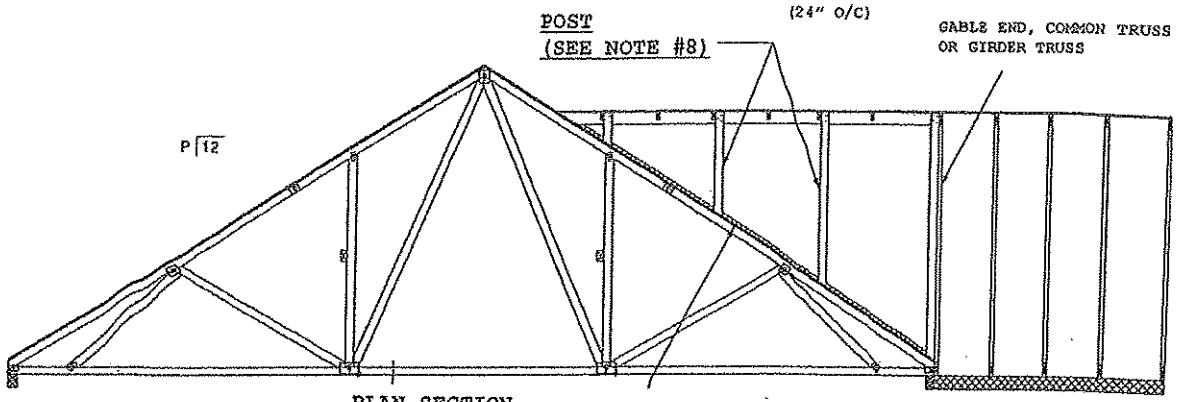

PLAN SECTION

GENERAL SPECIFICATIONS:

(1) WITH THE BASE TRUSSES ERECTED (INSTALLED), APPLY SHEATHING TOP CHORD OF SUPPORTING (BASE) TRUSSES.
(2) BRACE BOTTOM CHORD AND WEB MEMBERS AS PER PRE-ENGINEERED TRUSS DESIGNS.
(3) DEFINE VALLEY RIDGE BY RUNNING A LEVEL STRING FROM THE INTERSECTING RIDGE OF THE (a) GABLE END, (b) GIRDER TRUSS OR (c) COMMON TRUSS TO THE ROOF SHEATHING.
(4) INSTALL 2 X 6 VALLEY PLATES ON FLAT. FASTEN TO EACH SUPPORTING TRUSS WITH (2) 16d (3.5" X 0.131") NAILS.
(5) SET A 2 X 6 #2 RIDGE BOARD (MAX. 10'-0" RIDGE) OR 2 X 8 #2 SPF RIDGE BOARD (MAX. 20'-0" RIDGE). SUPPORT RIDGE BOARD WITH 2 X 4 POSTS SPACED 48" O/C. BEVEL BOTTOM OF POST TO SET EVENLY ON THE SHEATHING. FASTEN POST TO RIDGE WITH (4) 10d (3" X 0.131") NAILS. FASTEN POST TO ROOF SHEATHING WITH (3) 10d (3" X 0.131") TOE-NAILS.
(6) FRAME VALLEY RAFTERS FROM VALLEY PLATE TO RIDGE BOARD. MAXIMUM RAFTER SPACING IS 24" O/C. FASTEN VALLEY RAFTER TO RIDGE BEAM WITH (3) 16d (3.5" X 0.131") TOE-NAILS. FASTEN VALLEY RAFTER TO VALLEY PLATE WITH (3) 16d (3.5" X 0.131") TOE-NAILS.
(7) SUPPORT THE VALLEY RAFTERS WITH 2 X 4 POSTS AT 48" O/C (OR LESS) ALONG EACH RAFTER. INSTALL POSTS IN A STAGGERED PATTERN AS SHOWN ON PLAN DRAWING. ALIGN POSTS WITH TRUSSES BELOW. FASTEN VALLEY RAFTER TO POST WITH (4) 10d (3" X 0.131") NAILS. FASTEN POST THROUGH SHEATHING TO SUPPORTING TRUSSES WITH (2) 16d (3.5" X 0.131") NAILS.
(8) POSTS SHALL BE 2 X 4 #2 SPF OR BETTER. POSTS EXCEEDING 75" IN HEIGHT SHALL BE INCREASED TO 4 X 4 #2 SPF, OR BETTER, OR BE PRE-ASSEMBLED TWO (2) PLY 2 X 4 #2 SPF OR BETTER FASTENED TOGETHER WITH 2 ROWS OF 10d (3" X 0.131") NAILS AT 6" O/C.
(9) MAINTAIN A MINIMUM 3/4" LUMBER EDGE DISTANCE WHEN NAILING. NAIL SPACING SHOULD APPROXIMATE A MINIMUM 1-3/4" O/C OR MORE UNLESS NOTED OTHERWISE. ALL CONSTRUCTION TO CONFORM TO ONTARIO BUILDING CODE (CURRENT ADDITION) AT ALL TIMES.

NOTES:

(10) 48" O/C (MAXIMUM POST SPACING.
(11) ROOF LIVE LOAD = 34.8 PSF (MAX.)
(12) ROOF DEAD LOAD = 10.0 PSF (MAX.)
(13) PART 9 APPLICATION ONLY (ONTARIO BUILDING CODE)
(14) PART 4 APPLICATION ONLY (ONTARIO BUILDING CODE) WITH APPROVED REVIEW BY LICENSED PROFESSIONAL ENGINEER.
(15) BASE TRUSS SPACING (24" O/C MAX.)
(16) ALL PRE-ENGINEERED BASE TRUSS COMPONENTS TO BE SEALED BY LICENSED PROFESSIONAL ENGINEER AND THIS DETAIL TO BE VERIFIED AND APPROVED BY SAME WHEN RIDGE BOARD LENGTH EXCEEDS 12'-0".
(17) ALL BASE TRUSSES: P = 4 (4/12) - MINIMUM.
(18) ALL VALLEY RAFTERS: P = 4 (4/12) - MINIMUM.

LICENSED PROFESSIONAL ENGINEER
3-5-74
S. KATSOULAKOS
PROVINCE OF ONTARIO

DWG NO TAM 6305.14
STRUCTURAL
COMPONENT ONLY

Micro City Engineering Services Inc.
(BCIN: 26064; FIRM BCIN: 29991)
RR #1, Po Box 61
Glencoe, Ontario
N0L 1M0
(519) 287 - 2242; Fax: (519) 287 - 5750 (Call)

LICENSED PROFESSIONAL ENGINEER
1-20-79
S. KATSOULAKOS
PROVINCE OF ONTARIO

DWG NO 7474
STRUCTURAL
COMPONENT ONLY

Responsibilities:

Micro City Engineering Services is responsible for the design of trusses as individual components.

It is the responsibilities of others to ascertain that the design loads utilized on this (these) drawing(s) meet or exceed the actual dead load imposed by the structure and the live load imposed by the local building code or the authorities having jurisdiction over such decisions.

All dimensions are to be verified by the owner, contractor, architect, or other authority having input over such decisions prior to truss component manufacture. At no time shall Micro City Engineering Services Inc. or its employees be responsible for dimension errors.

Micro City Engineering Services Inc. bears no responsibility for the erection of any truss components. Persons erecting truss components are cautioned to seek professional advice regarding temporary and permanent bracing systems and to be totally familiar with all aspects of truss erection prior to proceeding on any truss component erection job. Any bracing shown on Micro City Engineering Services Inc. or Tamarack Roof Trusses Inc. sealed or unsealed truss component drawings is specified for the single truss component in question and is identified as an integral part of the design for that particular truss component but is not meant to represent the only required bracing for that particular truss component when installed as a component in a series of truss components in a roof truss system.

It is the truss manufacturer's responsibility to ensure that trusses are manufactured in accordance with Micro City Engineering Services Inc. specifications outlined below:

SPECIFICATIONS:

Truss components sealed by Micro City Engineering Services Inc. must conform to the relevant sections of the current Building Code of Ontario and Canada (Part 4 or Part 9) or the current Farm Building Code of Canada in accordance with the application specified on the sealed truss component drawing. All truss component design procedures must conform to the current design standard issued by the Truss Plate Institute of Canada (TPIC). All unit lumber and nailing stresses identified on truss component design drawings and/or used in the design of individual truss components shall conform to the current CSA Wood Design standard identified in the current Building Code and TPIC Design Standards.

The lumber used to manufacture any truss component is to conform to the specified size and grade identified on the truss drawing.

The lumber used in the manufacture of any truss component is not to exceed 19% during its service use unless specifically noted on the truss drawing.

The lumber used in the manufacture of any truss component is not to be treated with any chemicals during its service life unless specifically noted on the truss drawing.

Connector plates shall be applied to both faces of the truss component at each joint and shall be positioned exactly as specified.

The top chord of any truss component is assumed to be continuously laterally braced by the roof sheathing or purlins at intervals specified on the sealed truss component drawing but not exceeding 24" o/c (Part 9 design) and not exceeding 48" o/c (Part 4 or Agricultural design).

When a truss component is to be installed with no rigid ceiling attached directly to the bottom chord, then the bottom chord is to be laterally braced at intervals not exceeding 3m (or 10'-0").

All sealed or unsealed truss component drawings provided by Micro City Engineering Services Inc. Or Tamarack Roof Trusses Inc. should be read in conjunction with the following:

Warning-Verify design parameters and READ NOTES ON THIS AND INCLUDED MITEK REFERENCE PAGE MII-7473C rev 10-'08 BEFORE USE. Design valid for use only with Mitek connectors. This design is based only upon parameters shown, and is for individual building component. Applicability of design parameters and proper incorporation of component is the responsibility of the building designer - not the truss designer. Bracing shown is for lateral support of individual web members only. Additional temporary bracing to insure stability during construction is the responsibility of the erector. Additional permanent bracing of the overall structure is the responsibility of the building designer. For general guidance regarding fabrication, quality control, storage, delivery, erection, and bracing, consult TPIC Appendix G - Minimum Quality Manufacturing Criteria available from www.tpic.ca and BCSI Building Component Safety Information available from the Truss Plate Institute, 781 N. Lee Street, Suite 312, Alexandria, VA, 22314.