It is the builder's complete responsibility to ensure that all plans submitted for approval fully comply with the Architectural Guidelines and all applicable regulations and requirements including zoning provisions and any provisions in the subdivision agreement. The Control Architect is not responsible in any way for examining or approving site (lotting) plans or working drawings with respect to any zoning or building code or permit matter or that any house can be properly built or located on its lot.

This is to certify that these plans comply with the applicable Architectural Design Guidelines approved by the Town of INNISFIL.

ARCHITECTURAL REVIEW & APPROVAL

OCT 10 2017

John G. Williams Limited, Architect

NOTE J1: PROVIDE SOLID BLOCKING @ 24" O.C. WHERE FLOOR JOISTS ARE PARALLEL TO FOUNDATION WALL (TYP.)

NOTE: FLOOR FRAMING INFO REFER TO SHOP DRAWINGS FOR ALL TRUSS-JOIST INFORMATION AND DETAILS. UNLESS OTHERWISE NOTED.

NOTE: SPACE ALL FLOOR JOISTS @ 12" O.C. UNDER ALL CERAMIC TILE AREAS.

NOTE: ALL LVL'S SUPPORTING FLOOR LOADS ARE TO BE SPECIFIED BY FLOOR TRUSS MANUFACTURER.

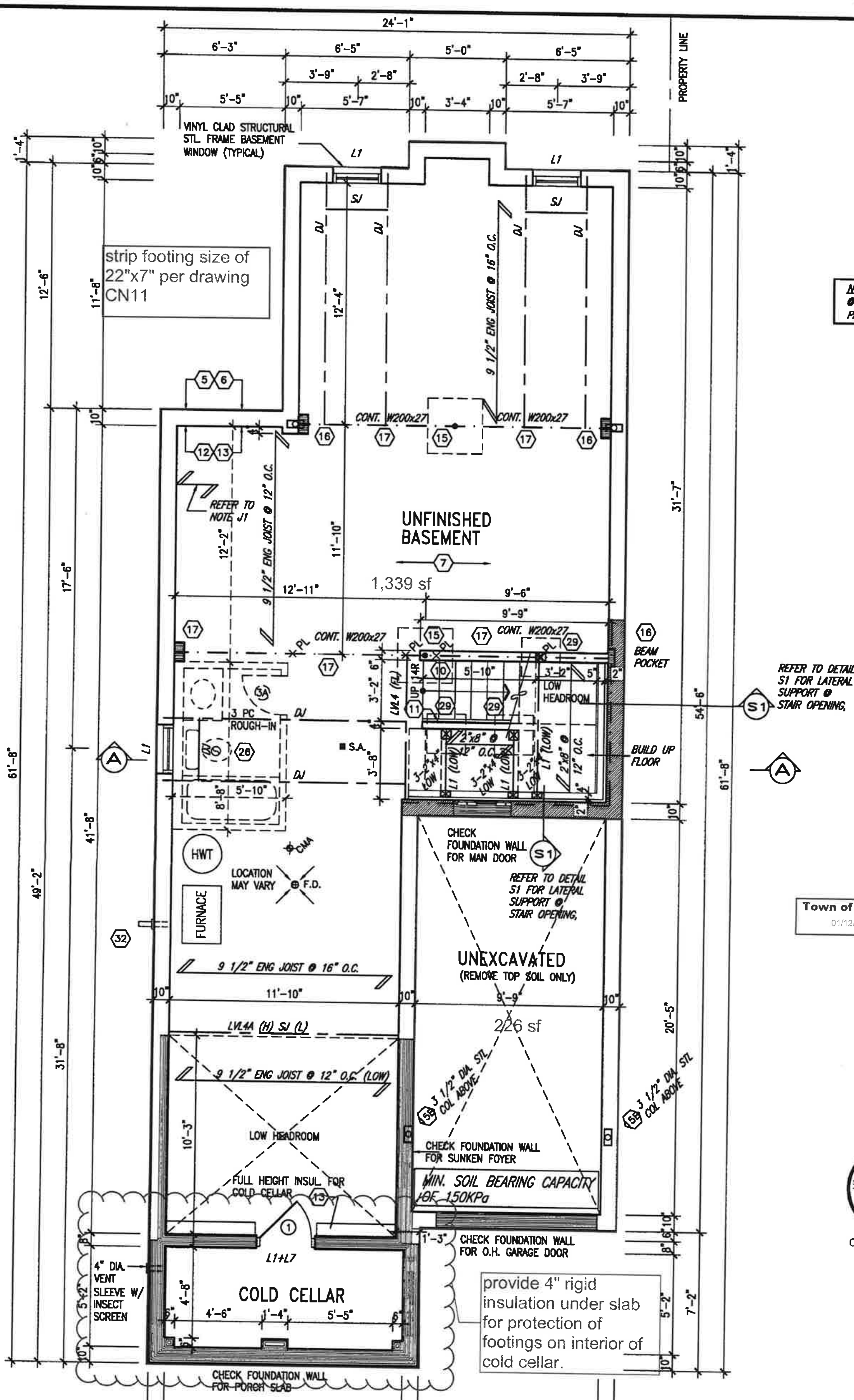

Town of Innisfil Certified Model
01/12/2017 3:28:22 PM kgervais

S.J. BOYD
LICENSED PROFESSIONAL ENGINEER
PROVINCE OF ONTARIO
OCT 4, 2017

AREAS	ELEV 'A'	ELEV 'B'	ELEV 'C'
Ground floor area	1021 SF	1021 SF	1029 SF
Second floor area	985 SF	995 SF	993 SF
Subtotal	2006 SF	2016 SF	2022 SF
Deduct all open area	0 SF	0 SF	XXXX SF
Total net area	2006 SF	2016 SF	2022 SF
Finished basement area	0000 SF	0000 SF	XXXX SF
Coverage without porch	1257 SF 116.78 SM	1257 SF 116.78 SM	1259 SF 116.96 SM
Coverage with porch	1341 SF 124.58 SM	1341 SF 124.58 SM	1307 SF 121.42 SM

BASEMENT FLOOR PLAN 'A'

no.	description	date	by
9	.	.	.
8	.	.	.
7	.	.	.
6	.	.	.
5	.	.	.
4	REVISED AS PER ENG'S COMMENTS	OCT 04-17	RC
3	REVISED TO 10" FOUNDATION WALLS	DEC 12-16	AJE
2	REVISED INSULATION AT STAIRS	SEPT 19/16	SB
1	ISSUED FOR CLIENT REVIEW	JUL 04-16	RC

The undersigned has reviewed and takes responsibility for this design and has the qualifications and meets the requirements set out in the Ontario Building Code to be a Designer.

qualification information: Wellington Jno-Baptiste — 25591
registration information: VA3 Design Inc. — 42658

Contractor must verify all dimensions on the job and report any discrepancy to the Designer before proceeding with the work. All drawings and specifications are instruments of service and the property of the Designer which must be returned at the completion of the work. Drawings are not to be scaled.

VA3 DESIGN
255 Consumers Rd Suite 120
Toronto ON M2J 1R4
t 416.630.2255 f 416.630.4782
va3design.com

BAYVIEW WELLINGTON — **S30-1**

project name: ALCONA — municipality: INNISFIL, ONTARIO — project no.: 13049

date: NOV. 2015 — BASEMENT FLOOR PLAN 'A' — drawing no.: 1

drawn by: RC — checked by: . — scale: 3/16" = 1'-0" — file name: 13049-S30-1

RICHARD - H:\ARCHIVE\WORKING\2013\13049.BW\UNITS\30\13049-S30-1.dwg - Wed - Oct 4 2017 - 11:49 AM

All drawings specifications, related documents and design are the copyright property of VA3 DESIGN. Reproduction of this property in whole or in part is strictly prohibited without VA3 DESIGN's written permission.

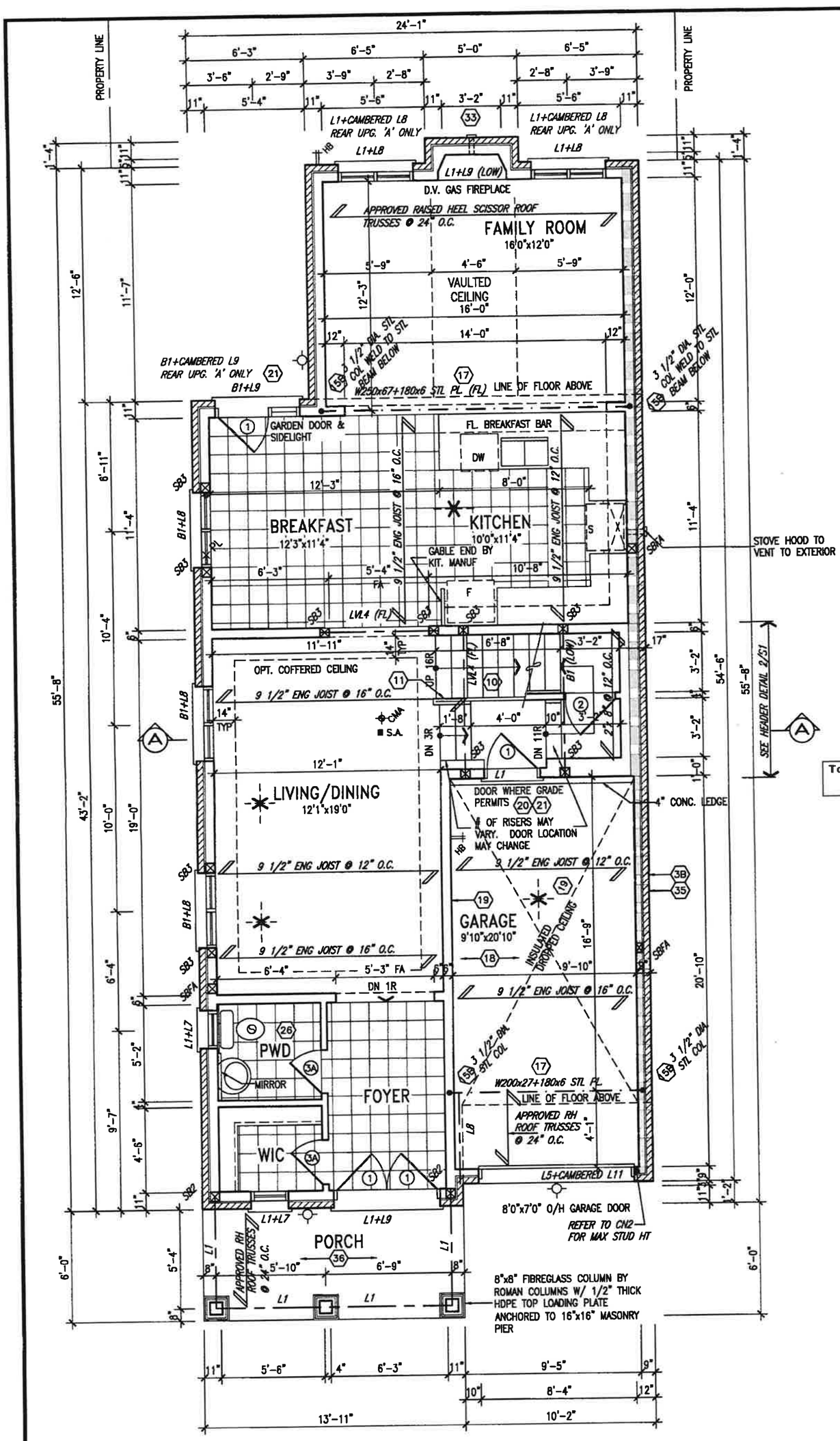

Town of Innisfil Certified Model
01/12/2017 3:28:31 PM kgervais

LICENSED PROFESSIONAL ENGINEER
S. J. BOYD
PROVINCE OF ONTARIO
OCT 4, 2017

NOTE: SPACE ALL FLOOR JOISTS @ 12" O.C. UNDER ALL CERAMIC TILE AREAS.

NOTE: ALL LVL'S SUPPORTING FLOOR LOADS ARE TO BE SPECIFIED BY FLOOR TRUSS MANUFACTURER.

NOTE: FLOOR FRAMING INFO REFER TO SHOP DRAWINGS FOR ALL TRUSS-JOIST INFORMATION AND DETAILS. UNLESS OTHERWISE NOTED.

It is the builder's complete responsibility to ensure that all plans submitted for approval fully comply with the Architectural Guidelines and all applicable regulations and requirements including zoning provisions and any provisions in the subdivision agreement. The Control Architect is not responsible in any way for examining or approving site (lotting) plans or working drawings with respect to any zoning or building code or permit matter or that any house can be properly built or located on its lot.

This is to certify that these plans comply with the applicable Architectural Design Guidelines approved by the Town of INNISFIL.

ARCHITECTURAL REVIEW & APPROVAL
OCT 10 2017
John G. Williams Limited, Architect

GROUND FLOOR PLAN 'A'

INDICATES REDUCED SIDE YARD

no.	description	date	by
9	.	.	.
8	.	.	.
7	.	.	.
6	.	.	.
5	.	.	.
4	REVISED AS PER ENG'S COMMENTS	OCT 04-17	RC
3	REVISED TO 10" FOUNDATION WALLS	DEC 12-16	AJE
2	REVISED INSULATION AT STAIRS	SEPT 19/16	SB
1	ISSUED FOR CLIENT REVIEW	JUL 04-16	RC

The undersigned has reviewed and takes responsibility for this design and has the qualifications and meets the requirements set out in the Ontario Building Code to be a Designer.
qualification information
Wellington Jno-Baptiste — signature — 25591 BCIN
name registration information
VA3 Design Inc. — 42658

Contractor must verify all dimensions on the job and report any discrepancy to the Designer before proceeding with the work. All drawings and specifications are instruments of service and the property of the Designer which must be returned at the completion of the work. Drawings are not to be scaled.

VA3 DESIGN
255 Consumers Rd Suite 120
Toronto ON M2J 1R4
t 416.630.2255 f 416.630.4782
va3design.com

BAYVIEW WELLINGTON — **S30-1**

project name: ALCONA — municipality: INNISFIL, ONTARIO — project no. 13049

date: NOV. 2015 — GROUND FLOOR PLAN 'A' — drawing no. 2

drawn by: RC — checked by: — scale: 3/16" = 1'-0" — file name: 13049-S30-1

RICHARD – H:\ARCHIVE\WORKING\2013\13049.BW\UNITS\30"\13049-S30-1.dwg – Wed – Oct 4 2017 – 11:49 AM

All drawings specifications, related documents and design are the copyright property of VA3 DESIGN. Reproduction of this property in whole or in part is strictly prohibited without VA3 DESIGN's written permission.

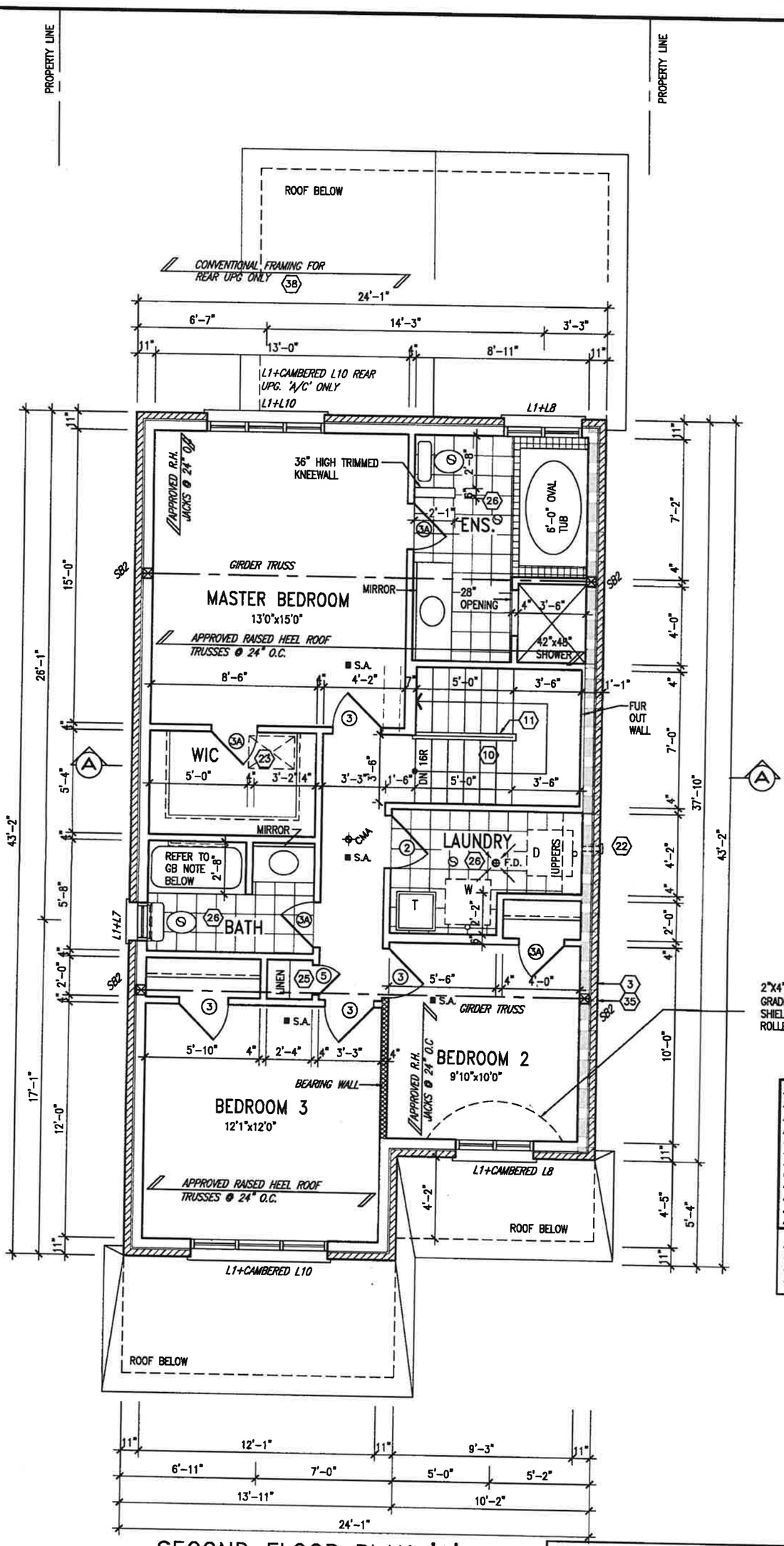

Town of Innisfil Certified Model
01/12/2017 3:28:36 PM kgervais

LICENSED PROFESSIONAL ENGINEER S. J. BOYD PROVINCE OF ONTARIO

OCT 4,2017

2"X4" @ 8" O.C. W/ 3/8" EXTERIOR GRADE PLYWD. W/ ICE & WATER SHIELD
ROLLED ROOF TO MATCH SHINGLE

STUD WALL REINFORCEMENT FOR FUTURE GRAB BARS IN MAIN BATHROOM
REINFORCEMENT OF STUD WALLS SHALL BE INSTALLED ADJACENT TO WATER CLOSETS AND SHOWER OR BATHTUB IN MAIN BATHROOM. REFER TO OBC. 9.5.2.3, 3.8.3.8.(3)(a), 3.8.3.8.(3)(c), 3.8.3.13.(2)(i) & 3.8.3.13.(4)(c). AND DETAILS PROVIDED.

NOTE: ROOF FRAMING
ROOF TRUSS INFORMATION REFER TO ROOF TRUSS SHOP DRAWINGS FOR ALL ROOF FRAMING INFORMATION UNLESS OTHERWISE NOTED.

It is the builder's complete responsibility to ensure that all plans submitted for approval fully comply with the Architectural Guidelines and all applicable regulations and requirements including zoning provisions and any provisions in the subdivision agreement. The Control Architect is not responsible in any way for examining or approving site (lotting) plans or working drawings with respect to any zoning or building code or permit matter or that any house can be properly built or located on its lot.

This is to certify that these plans comply with the applicable Architectural Design Guidelines approved by the Town of INNISFIL.

ARCHITECTURAL REVIEW & APPROVAL
OCT 10 2017
John G. Williams Limited, Architect

SECOND FLOOR PLAN 'A'

INDICATES REDUCED SIDE YARD

no.	description	date	by
9	.	.	.
8	.	.	.
7	.	.	.
6	.	.	.
5	.	.	.
4	REVISED AS PER ENG'S COMMENTS	OCT 04-17	RC
3	REVISED TO 10" FOUNDATION WALLS	DEC 12-16	AJE
2	REVISED INSULATION AT STAIRS	SEPT 19/16	SB
1	ISSUED FOR CLIENT REVIEW	JUL 04-16	RC

The undersigned has reviewed and takes responsibility for this design and has the qualifications and meets the requirements set out in the Ontario Building Code to be a Designer.
qualification information
name: Wellington Jno-Baptiste — signature — BCIN 25591
registration information: VA3 Design Inc. — 42658

Contractor must verify all dimensions on the job and report any discrepancy to the Designer before proceeding with the work. All drawings and specifications are instruments of service and the property of the Designer which must be returned at the completion of the work. Drawings are not to be scaled.

VA3 DESIGN
255 Consumers Rd Suite 120
Toronto ON M2J 1R4
t 416.630.2255 f 416.630.4782
va3design.com

BAYVIEW WELLINGTON — **S30-1**

project name: ALCONA — municipality: INNISFIL, ONTARIO — project no. 13049
date: NOV. 2015 — SECOND FLOOR PLAN 'A'
drawn by: RC — checked by: — scale: 3/16" = 1'-0" — file name: 13049-S30-1 — drawing no. 3
RICHARD – H:\ARCHIVE\WORKING\2013\13049.BW\UNITS\30"\13049-S30-1.dwg – Wed – Oct 4 2017 – 11:49 AM

All drawings specifications, related documents and design are the copyright property of VA3 DESIGN. Reproduction of this property in whole or in part is strictly prohibited without VA3 DESIGN's written permission.

Town of Innisfil Certified Model
01/12/2017 3:28:40 PM kgervais

S.J. BOYD — LICENSED PROFESSIONAL ENGINEER — PROVINCE OF ONTARIO
OCT 4,2017

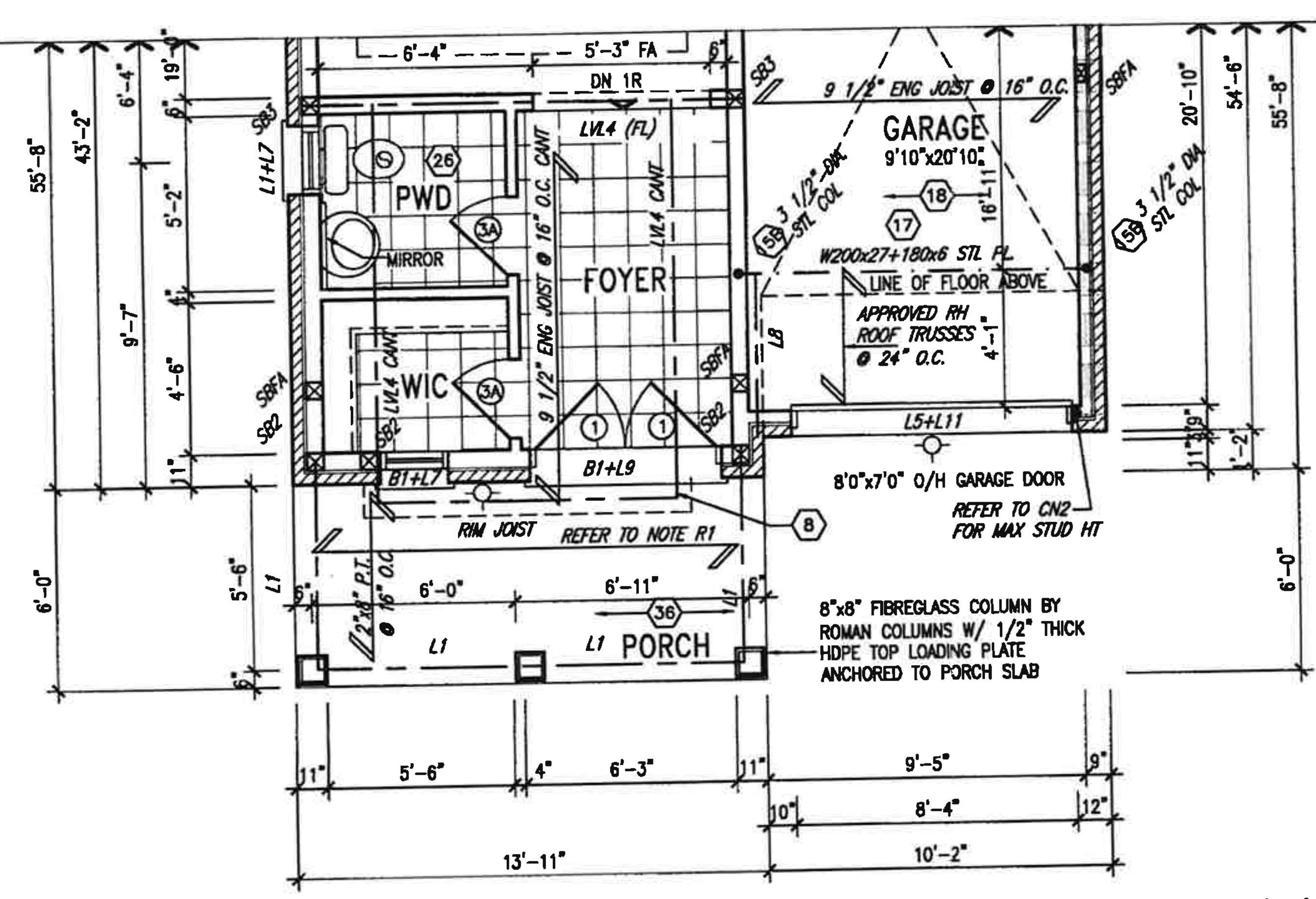

PARTIAL GROUND FLOOR PLAN 'B'

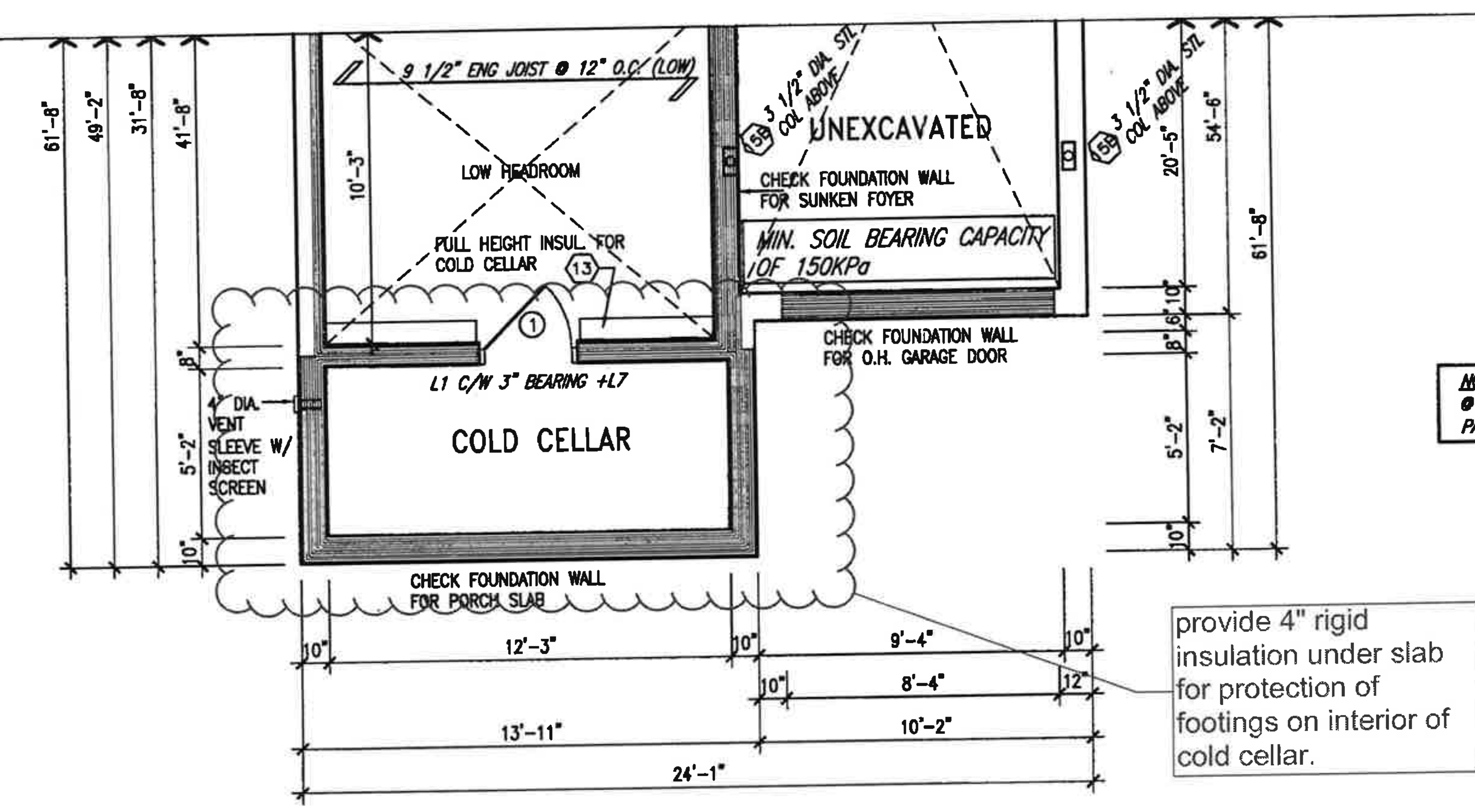

PARTIAL BASEMENT FLOOR PLAN 'B'

ROOF NOTE R1
2"x8" @ 16" O.C. P.T. W/ 2"x4" @ 12" O.C. DIAGONALLY CUT CROSS PURLINS W/ 5/8" EXTERIOR GRADE SHEATHING W/ SINGLE PLY ROOF MEMBRANE

NOTE: FLOOR FRAMING INFO REFER TO SHOP DRAWINGS FOR ALL TRUSS–JOIST INFORMATION AND DETAILS. UNLESS OTHERWISE NOTED.

NOTE: SPACE ALL FLOOR JOISTS @ 12" O.C. UNDER ALL CERAMIC TILE AREAS.

NOTE: ALL LVL'S SUPPORTING FLOOR LOADS ARE TO BE SPECIFIED BY FLOOR TRUSS MANUFACTURER.

NOTE J1: PROVIDE SOLID BLOCKING @ 24" O.C. WHERE FLOOR JOISTS ARE PARALLEL TO FOUNDATION WALL (TYP.)

It is the builder's complete responsibility to ensure that all plans submitted for approval fully comply with the Architectural Guidelines and all applicable regulations and requirements including zoning provisions and any provisions in the subdivision agreement. The Control Architect is not responsible in any way for examining or approving site (lotting) plans or working drawings with respect to any zoning or building code or permit matter or that any house can be properly built or located on its lot.

This is to certify that these plans comply with the applicable Architectural Design Guidelines approved by the Town of INNISFIL.

ARCHITECTURAL REVIEW & APPROVAL
OCT 10 2017
John G. Williams Limited, Architect

no.	description	date	by
9	.	.	.
8	.	.	.
7	.	.	.
6	.	.	.
5	.	.	.
4	REVISED AS PER ENG'S COMMENTS	OCT 04–17	RC
3	REVISED TO 10" FOUNDATION WALLS	DEC 12–16	AJE
2	REVISED INSULATION AT STAIRS	SEPT 19/16	SB
1	ISSUED FOR CLIENT REVIEW	JUL 04–16	RC

The undersigned has reviewed and takes responsibility for this design and has the qualifications and meets the requirements set out in the Ontario Building Code to be a Designer.
qualification information
Wellington Jno-Baptiste — name — signature — BCIN 25591
registration information
VA3 Design Inc. — 42658
Contractor must verify all dimensions on the job and report any discrepancy to the Designer before proceeding with the work. All drawings and specifications are instruments of service and the property of the Designer which must be returned at the completion of the work. Drawings are not to be scaled.

VA3 DESIGN
255 Consumers Rd Suite 120
Toronto ON M2J 1R4
t 416.630.2255 f 416.630.4782
va3design.com

BAYVIEW WELLINGTON — S30-1

project name: ALCONA
municipality: INNISFIL, ONTARIO
project no.: 13049
date: NOV. 2015
drawn by: RC
checked by: .
scale: 3/16" = 1'-0"
PARTIAL PLAN 'B'
file name: 13049-S30-1
drawing no.: 4

RICHARD – H:\ARCHIVE\WORKING\2013\13049.BW\UNITS\30\13049–S30–1.dwg – Wed – Oct 4 2017 – 11:49 AM

All drawings specifications, related documents and design are the copyright property of VA3 DESIGN. Reproduction of this property in whole or in part is strictly prohibited without VA3 DESIGN's written permission.

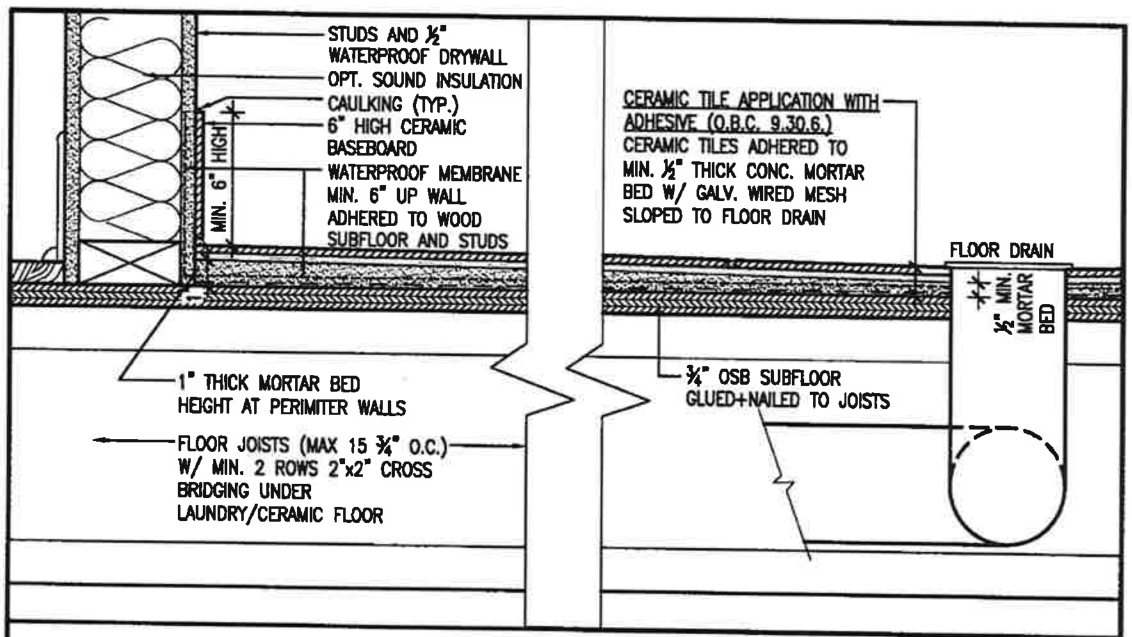

DETAIL THRU SLOPED CERAMIC FLOOR IN LAUNDRY

Town of Innisfil Certified Model
01/12/2017 3:28:45 PM kgervais

LICENSED PROFESSIONAL ENGINEER
S. J. BOYD
PROVINCE OF ONTARIO
OCT 4,2017

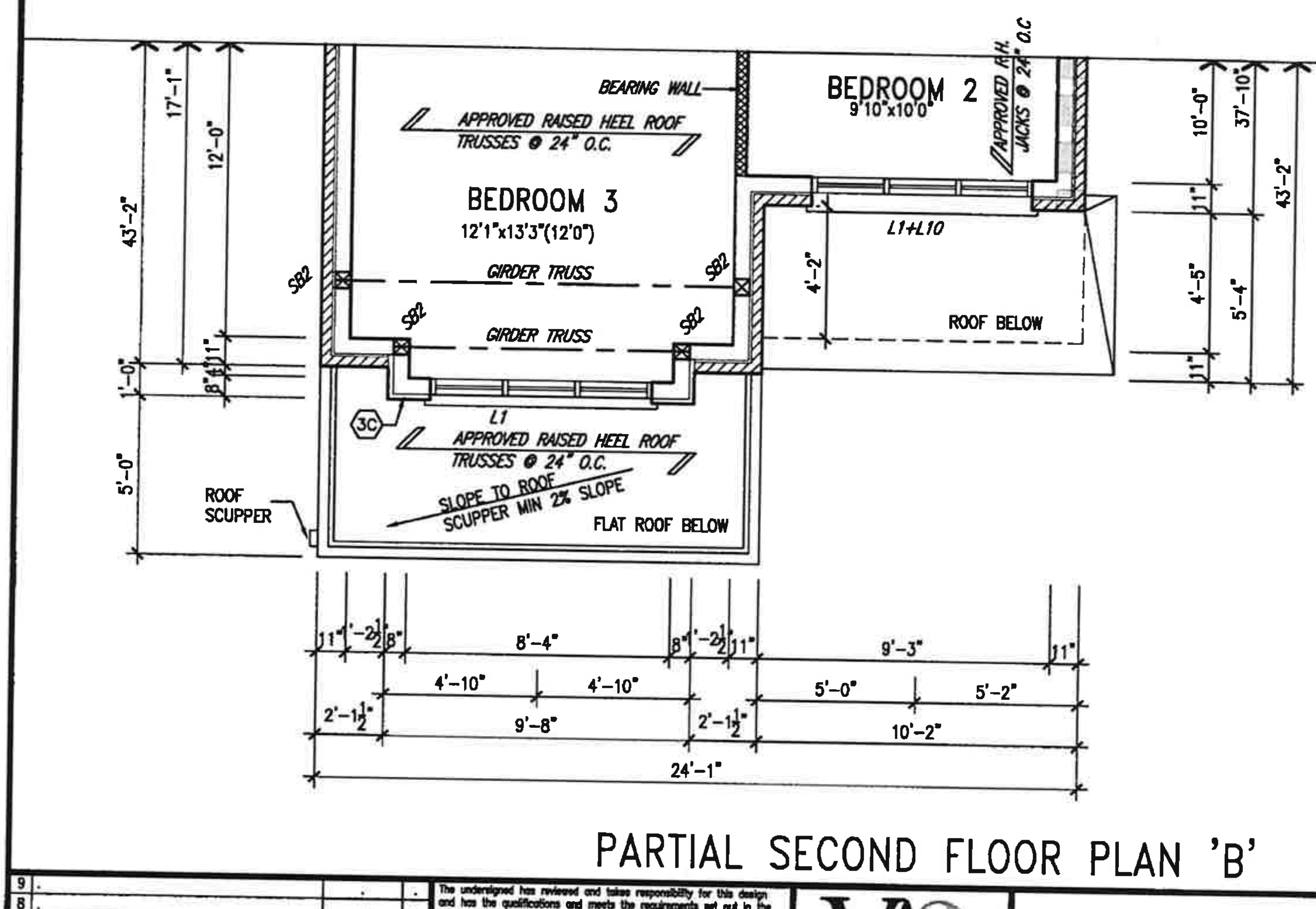

PARTIAL SECOND FLOOR PLAN 'B'

NOTE: *ALL LVL'S SUPPORTING FLOOR LOADS ARE TO BE SPECIFIED BY FLOOR TRUSS MANUFACTURER.*

NOTE: *SPACE ALL FLOOR JOISTS @ 12" O.C. UNDER ALL CERAMIC TILE AREAS.*

NOTE: *FLOOR FRAMING INFO REFER TO SHOP DRAWINGS FOR ALL TRUSS-JOIST INFORMATION AND DETAILS. UNLESS OTHERWISE NOTED.*

NOTE J1: *PROVIDE SOLID BLOCKING @ 24" O.C. WHERE FLOOR JOISTS ARE PARALLEL TO FOUNDATION WALL (TYP.)*

It is the builder's complete responsibility to ensure that all plans submitted for approval fully comply with the Architectural Guidelines and all applicable regulations and requirements including zoning provisions and any provisions in the subdivision agreement. The Control Architect is not responsible in any way for examining or approving site (lotting) plans or working drawings with respect to any zoning or building code or permit matter or that any house can be properly built or located on its lot.

This is to certify that these plans comply with the applicable Architectural Design Guidelines approved by the Town of INNISFIL.

ARCHITECTURAL REVIEW & APPROVAL
OCT 10 2017
John G. Williams Limited, Architect

no.	description	date	by
9	.	.	.
8	.	.	.
7	.	.	.
6	.	.	.
5	.	.	.
4	REVISED AS PER ENG'S COMMENTS	OCT 04-17	RC
3	REVISED TO 10" FOUNDATION WALLS	DEC 12-16	AJE
2	REVISED INSULATION AT STAIRS	SEPT 19/16	SB
1	ISSUED FOR CLIENT REVIEW	JUL 04-16	RC

The undersigned has reviewed and takes responsibility for this design and has the qualifications and meets the requirements set out in the Ontario Building Code to be a Designer.
qualification information
Wellington Jno-Baptiste — signature — BCIN 25591
registration information
VA3 Design Inc. — BCIN 42658

Contractor must verify all dimensions on the job and report any discrepancy to the Designer before proceeding with the work. All drawings and specifications are instruments of service and the property of the Designer which must be returned at the completion of the work. Drawings are not to be scaled.

VA3 DESIGN
255 Consumers Rd Suite 120
Toronto ON M2J 1R4
t 416.630.2255 f 416.630.4782
va3design.com

BAYVIEW WELLINGTON — **S30-1**

project name: ALCONA
municipality: INNISFIL, ONTARIO
project no.: 13049
date: NOV. 2015
drawn by: RC
checked by:
scale: 3/16" = 1'-0"
PARTIAL PLAN 'B'
file name: 13049-S30-1
drawing no.: 5

RICHARD – H:\ARCHIVE\WORKING\2013\13049.BW\UNITS\30\13049-S30-1.dwg – Wed – Oct 4 2017 – 11:49 AM

All drawings specifications, related documents and design are the copyright property of VA3 DESIGN. Reproduction of this property in whole or in part is strictly prohibited without VA3 DESIGN's written permission.

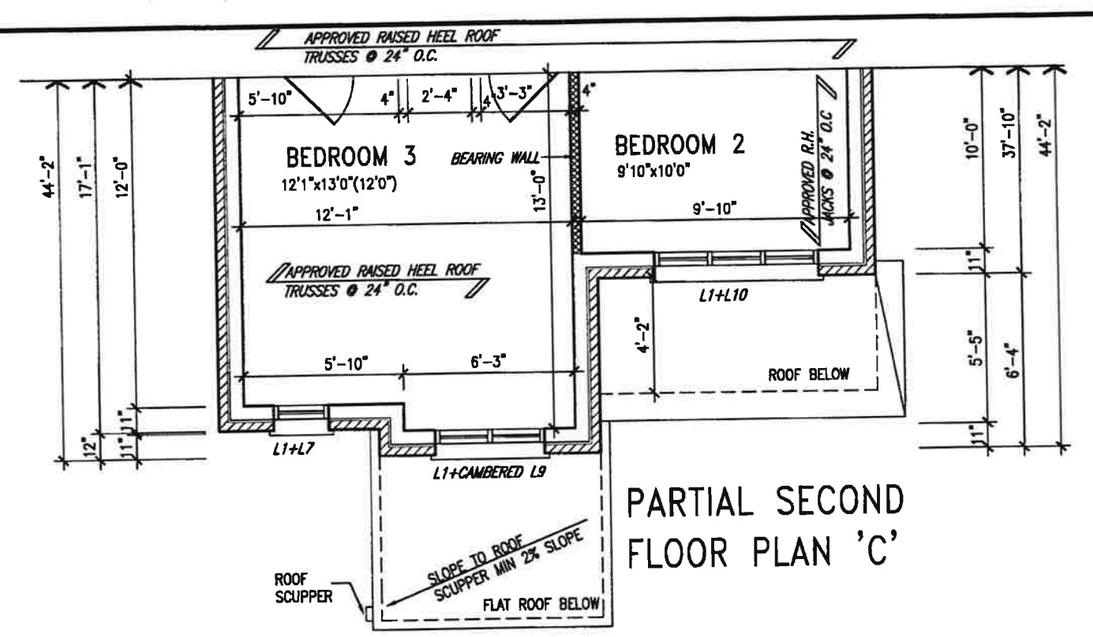

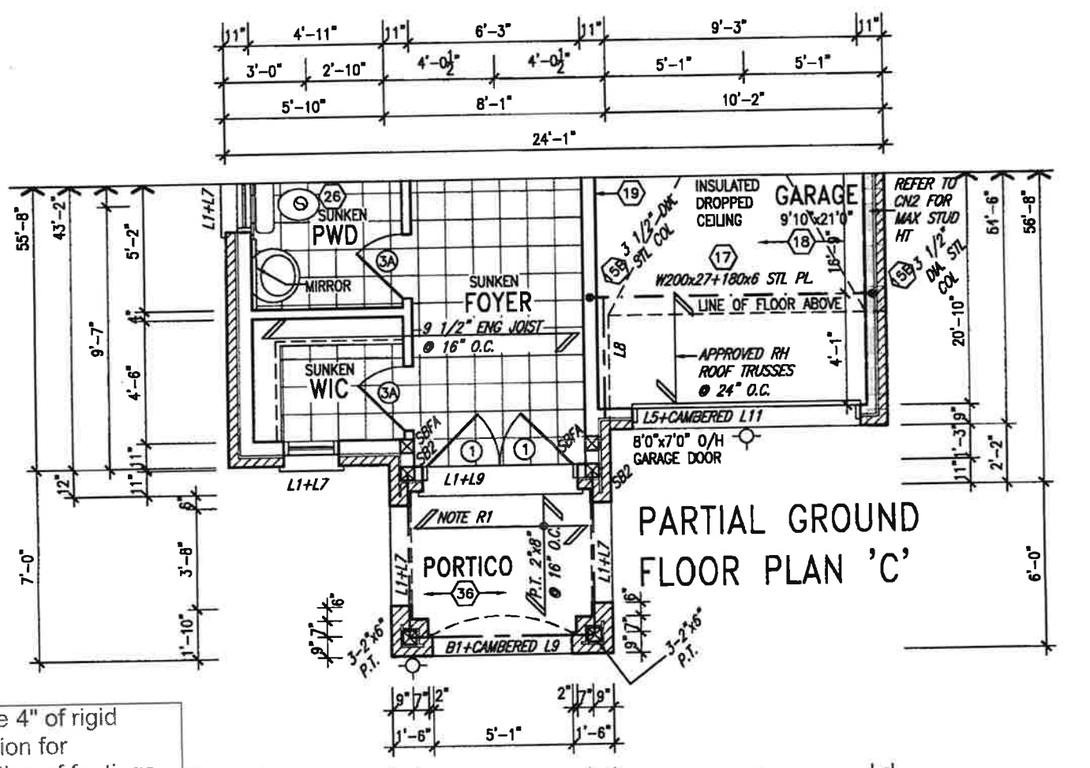

Town of Innisfil Certified Model
01/12/2017 3:28:50 PM kgervais

LICENSED PROFESSIONAL ENGINEER S. J. BOYD PROVINCE OF ONTARIO
OCT 4, 2017

provide 4" of rigid insulation for protection of footings on interior of cold cellar.

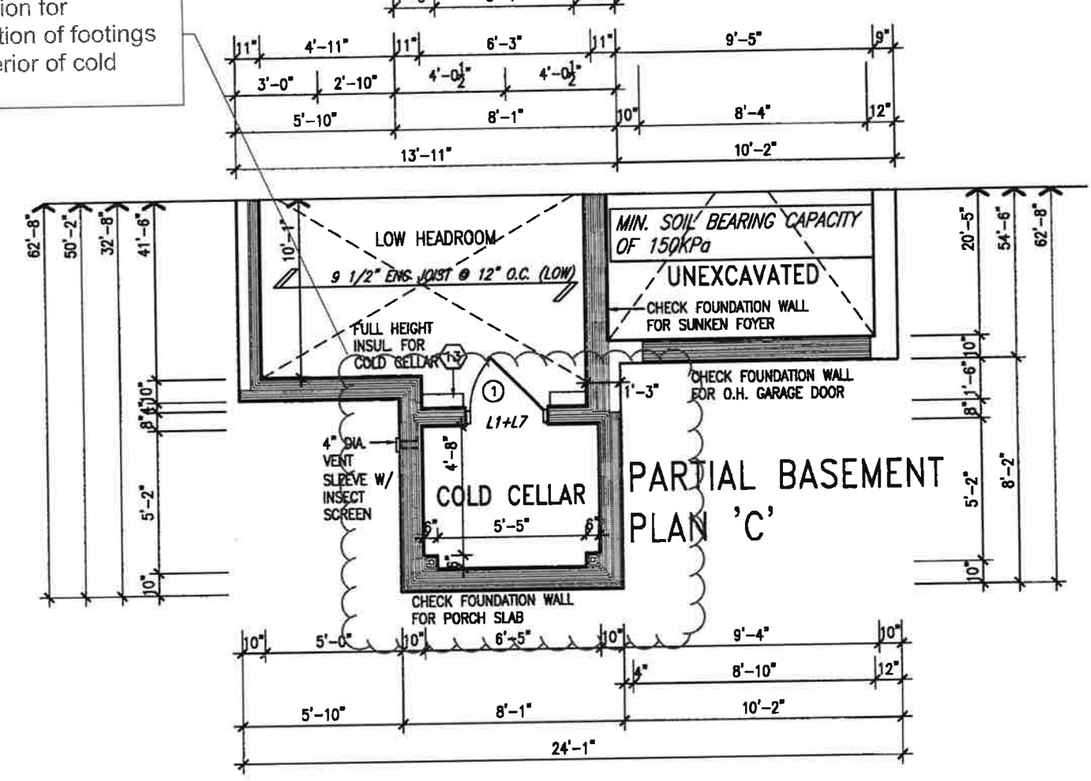

ROOF NOTE R1
2"x8" @ 16" O.C. P.T. W/ 2"x4" @ 12" O.C. DIAGONALLY CUT CROSS PURLINS W/ 5/8" EXTERIOR GRADE SHEATHING W/ SINGLE PLY ROOF MEMBRANE

NOTE: FLOOR FRAMING INFO REFER TO SHOP DRAWINGS FOR ALL TRUSS-JOIST INFORMATION AND DETAILS. UNLESS OTHERWISE NOTED.

NOTE: SPACE ALL FLOOR JOISTS @ 12" O.C. UNDER ALL CERAMIC TILE AREAS.

NOTE: ALL LVL'S SUPPORTING FLOOR LOADS ARE TO BE SPECIFIED BY FLOOR TRUSS MANUFACTURER.

NOTE J1: PROVIDE SOLID BLOCKING @ 24" O.C. WHERE FLOOR JOISTS ARE PARALLEL TO FOUNDATION WALL (TYP.)

It is the builder's complete responsibility to ensure that all plans submitted for approval fully comply with the Architectural Guidelines and all applicable regulations and requirements including zoning provisions and any provisions in the subdivision agreement. The Control Architect is not responsible in any way for examining or approving site (fitting) plans or working drawings with respect to any zoning or building code or permit matter or that any house can be properly built or located on its lot.

This is to certify that these plans comply with the applicable Architectural Design Guidelines approved by the Town of INNISFIL.

ARCHITECTURAL REVIEW & APPROVAL
OCT 2 / 2017
John G. Williams Limited, Architect

no.	description	date	by
9	.	.	.
8	.	.	.
7	.	.	.
6	.	.	.
5	.	.	.
4	REVISED AS PER ENG'S COMMENTS	OCT 04-17	RC
3	REVISED TO 10" FOUNDATION WALLS	DEC 12-16	AJE
2	REVISED INSULATION AT STAIRS	SEPT 19/16	SB
1	ISSUED FOR CLIENT REVIEW	JUL 04-16	RC

The undersigned has reviewed and takes responsibility for this design and has the qualifications and meets the requirements set out in the Ontario Building Code to be a Designer.
qualification information
name: Wellington Jno-Baptiste — signature — BCIN 25591
registration information: VA3 Design Inc. — 42658

Contractor must verify all dimensions on the job and report any discrepancy to the Designer before proceeding with the work. All drawings and specifications are instruments of service and the property of the Designer which must be returned at the completion of the work. Drawings are not to be scaled.

VA3 DESIGN
255 Consumers Rd Suite 120
Toronto ON M2J 1R4
t 416.630.2255 f 416.630.4782
va3design.com

BAYVIEW WELLINGTON

project name: ALCONA
municipality: INNISFIL, ONTARIO
project no. 13049
date: NOV. 2015
drawing: PARTIAL PLAN 'C'
drawn by: RC
checked by: .
scale: 3/16" = 1'-0"
file name: 13049-S30-1
RICHARD - H:\ARCHIVE\WORKING\2013\13049.BW\UNITS\30\13049-S30-1.dwg - Wed - Oct 4 2017 - 11:49 AM

S30-1
drawing no. 6

All drawings specifications, related documents and design are the copyright property of VA3 DESIGN. Reproduction of this property in whole or in part is strictly prohibited without VA3 DESIGN's written permission.

UNINSULATED OPENINGS (PER OBC. SB-12,3.1.1(7))

30-1 ELEVATION A	ENERGY EFFICIENCY - OBC SB12		
ELEVATION	WALL AREA S.F.	OPENING S.F.	PERCENTAGE
FRONT	482 S.F.	107.722 S.F.	22.35 %
LEFT SIDE	1002 S.F.	90.667 S.F.	9.05 %
RIGHT SIDE	1002 S.F.	0 S.F.	0.00 %
REAR	482 S.F.	125.917 S.F.	26.12 %
* OPENINGS OMITTED AS PER SB-12 3.1.1.9(4) MAX 19.9 S.F. REFER TO ELEVATION FOR LOCATION		0 S.F.	
TOTAL SQ. FT.	2968.00 S.F.	324.31 S.F.	10.93 %
TOTAL SQ. M.	275.73 S.M.	30.13 S.M.	10.93 %

Town of Innisfil Certified Model
01/12/2017 3:28:55 PM kgervais

S. J. BOYD
LICENSED PROFESSIONAL ENGINEER
PROVINCE OF ONTARIO
OCT 4,2017

It is the builder's complete responsibility to ensure that all plans submitted for approval fully comply with the Architectural Guidelines and all applicable regulations and requirements including zoning provisions and any provisions in the subdivision agreement. The Control Architect is not responsible in any way for examining or approving site (lotting) plans or working drawings with respect to any zoning or building code or permit matter or that any house can be properly built or located on its lot.

This is to certify that these plans comply with the applicable Architectural Design Guidelines approved by the Town of INNISFIL.

ARCHITECTURAL REVIEW & APPROVAL
OCT 10 2017
John G. Williams Limited, Architect

FRONT ELEVATION 'A'

no.	description	date	by
1	ISSUED FOR CLIENT REVIEW	JUL 04-16	RC
2	REVISED INSULATION AT STAIRS	SEPT 19/16	SB
3	REVISED TO 10" FOUNDATION WALLS	DEC 12-16	AE
4	REVISED AS PER ENG'S COMMENTS	OCT 04-17	RC
5			
6			
7			
8			
9			

The undersigned has reviewed and takes responsibility for this design, and has the qualifications and meets the requirements set out in the Ontario Building Code to be a Designer.
qualification information: Wellington Jno-Baptiste, BCIN 25591
registration information: VA3 Design Inc., BCIN 42658

Contractor must verify all dimensions on the job and report any discrepancy to the Designer before proceeding with the work. All drawings and specifications are instruments of service and the property of the designer which must be returned at the completion of the work. Drawings are not to be scaled.

VA3 DESIGN
255 Consumers Rd Suite 120
Toronto ON M2J 1R4
t 416.630.2255 f 416.630.4782
va3design.com

All drawings specifications, related documents and design are the copyright property of VA3 DESIGN. Reproduction of this property in whole or in part is strictly prohibited without VA3 DESIGN's written permission.

project name: ALCONA
BAYVIEW WELLINGTON
municipality: INNISFIL, ONTARIO
S30-1
project no. 13049
drawing no. 7
FRONT ELEVATION A
date: NOV. 2015
drawn by: RC
checked by:
scale: 3/16" = 1'-0"
file name: 13049-S30-1
RICHARD - H:\ARCHIVE\WORKING\2013\13049.BW\UNITS\30\13049-S30-1.dwg - Wed - Oct 4 2017 - 11:49 AM

Town of Innisfil Certified Model
01/12/2017 3:29:01 PM kgervais

LICENSED PROFESSIONAL ENGINEER
S. J. BOYD
PROVINCE OF ONTARIO
OCT 4, 2017

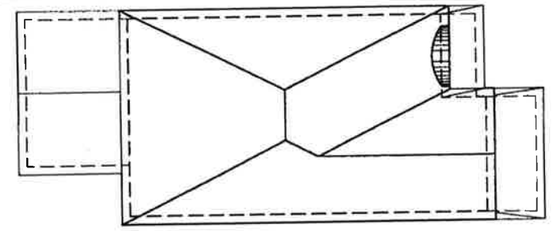

ROOF PLAN 'A'

It is the builder's complete responsibility to ensure that all plans submitted for approval fully comply with the Architectural Guidelines and all applicable regulations and requirements including zoning provisions and any provisions in the subdivision agreement. The Control Architect is not responsible in any way for examining or approving site (lotting) plans or working drawings with respect to any zoning or building code or permit matter or that any house can be properly built or located on its lot.

This is to certify that these plans comply with the applicable Architectural Design Guidelines approved by the Town of INNISFIL.

ARCHITECTURAL REVIEW & APPROVAL
OCT 10 2017
John G. Williams Limited, Architect

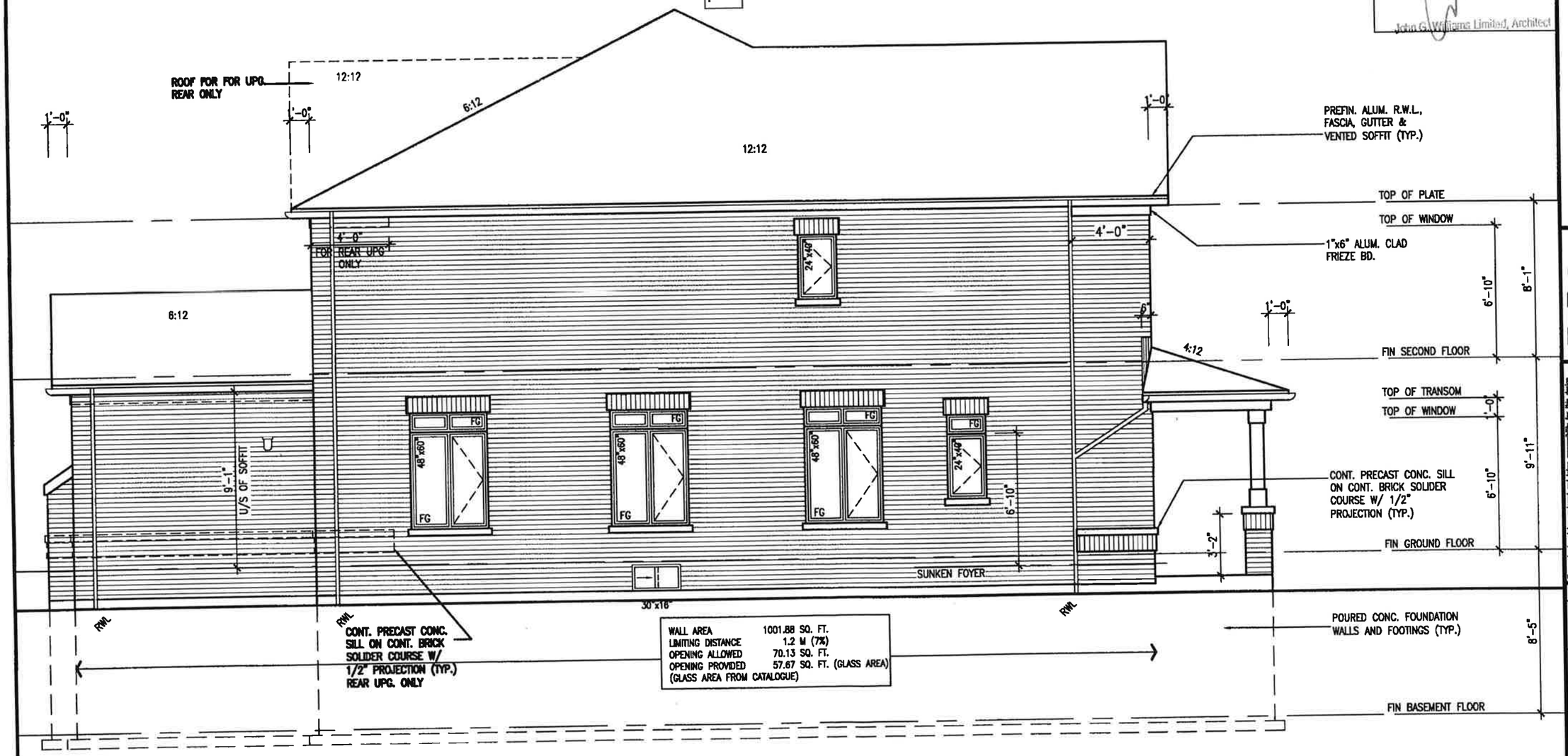

WALL AREA	1001.88 SQ. FT.
LIMITING DISTANCE	1.2 M (7%)
OPENING ALLOWED	70.13 SQ. FT.
OPENING PROVIDED (GLASS AREA FROM CATALOGUE)	57.67 SQ. FT. (GLASS AREA)

LEFT SIDE ELEVATION 'A'

REFER TO FRONT ELEVATION FOR TYPICAL NOTES & INFORMATION

S30-1

project no. 13049

drawing no. 8

BAYVIEW WELLINGTON

municipality: INNISFIL, ONTARIO

LEFT SIDE ELEVATION A

project name: ALCONA

date: NOV. 2015 | drawn by: RC | checked by | scale: 3/16" = 1'-0" | file name: 13049-S30-1

RICHARD - H:\ARCHIVE\WORKING\2013\13049 BWL\UNITS\30\13049-S30-1.dwg - Wed - Oct 4 2017 - 11:49 AM

VA3 DESIGN
255 Consumers Rd Suite 120
Toronto ON M2J 1R4
t 416.630.2255 f 416.630.4782
va3design.com

The undersigned has reviewed and takes responsibility for this design and has the qualifications and meet the requirements set out in the Ontario Building Code to be a Designer.

qualification information	BCIN
Wellington Jno-Baptiste	25591
registration information	BCIN
VA3 Design Inc.	42658

Contractor must verify all dimensions on the job and report any discrepancy to the Designer before proceeding with the work. All drawings and specifications are instruments of service and the property of the Designer which must be returned at the completion of the work. Drawings are not to be scaled.

signature

no.	description	date	by
9	-	-	-
8	-	-	-
7	-	-	-
6	-	-	-
5	-	-	-
4	REVISED AS PER ENG'S COMMENTS	OCT 04-17	RC
3	REVISED TO 10" FOUNDATION WALLS	DEC 12-16	AJE
2	REVISED INSULATION AT STAIRS	SEPT 19/16	SB
1	ISSUED FOR CLIENT REVIEW	JUL 04-16	RC

All drawings specifications, related documents and design are the copyright property of VA3 DESIGN. Reproduction of this property in whole or in part is strictly prohibited without VA3 DESIGN's written permission.

Town of Innisfil Certified Model
01/12/2017 3:29:10 PM kgervais

LICENSED PROFESSIONAL ENGINEER
S. J. BOYD
PROVINCE OF ONTARIO
OCT 4, 2017

BRICK VENEER CONSTRUCTION

(FOR WALLS LESS THAN 1.2M (3'-11") FROM THE LOT LINE)
45 MINUTE FIRE RATED WALL
PROVIDE A CONTINUOUS LAYER OF 12.7mm (1/2") TYPE 'X' GYPSUM BOARD (INTERIOR SIDE) INSTALLED SO THAT ALL EDGES ARE SUPPORTED, TAPED AND FILLED. SPACE BETWEEN WOOD STUDS TO BE FILLED WITH INSULATION CONFORMING TO CAN/ULC-S702, "MINERAL FIBRE THERMAL INSULATION FOR BUILDINGS" WITH A MASS OF NOT LESS THAN 1.22 Kg/SQ.M. AND MUST FILL AT LEAST 90% OF THE CAVITY THICKNESS. THE TYPE 'X' & INSULATION MUST BE RUN CONTINUOUSLY BEHIND ALL INTERSECTING PARTITIONS, MECHANICAL CHASES, BATHTUBS, SHOWERS, ETC. ENSURE INSULATION & TYPE 'X' IS INSTALLED IN GARAGE EXTERIOR WALLS.
(REFER TO SECTION SB-2 OF OBC 2012-SUPPLEMENTARY STANDARDS)

It is the builder's complete responsibility to ensure that all plans submitted for approval fully comply with the Architectural Guidelines and all applicable regulations and requirements including zoning provisions and any provisions in the subdivision agreement. The Control Architect is not responsible in any way for examining or approving site (lotting) plans or working drawings with respect to any zoning or building code or permit matter or that any house can be properly built or located on its lot.

This is to certify that these plans comply with the applicable Architectural Design Guidelines approved by the Town of INNISFIL.

ARCHITECTURAL REVIEW & APPROVAL
OCT 10 2017
John G. Williams Limited, Architect

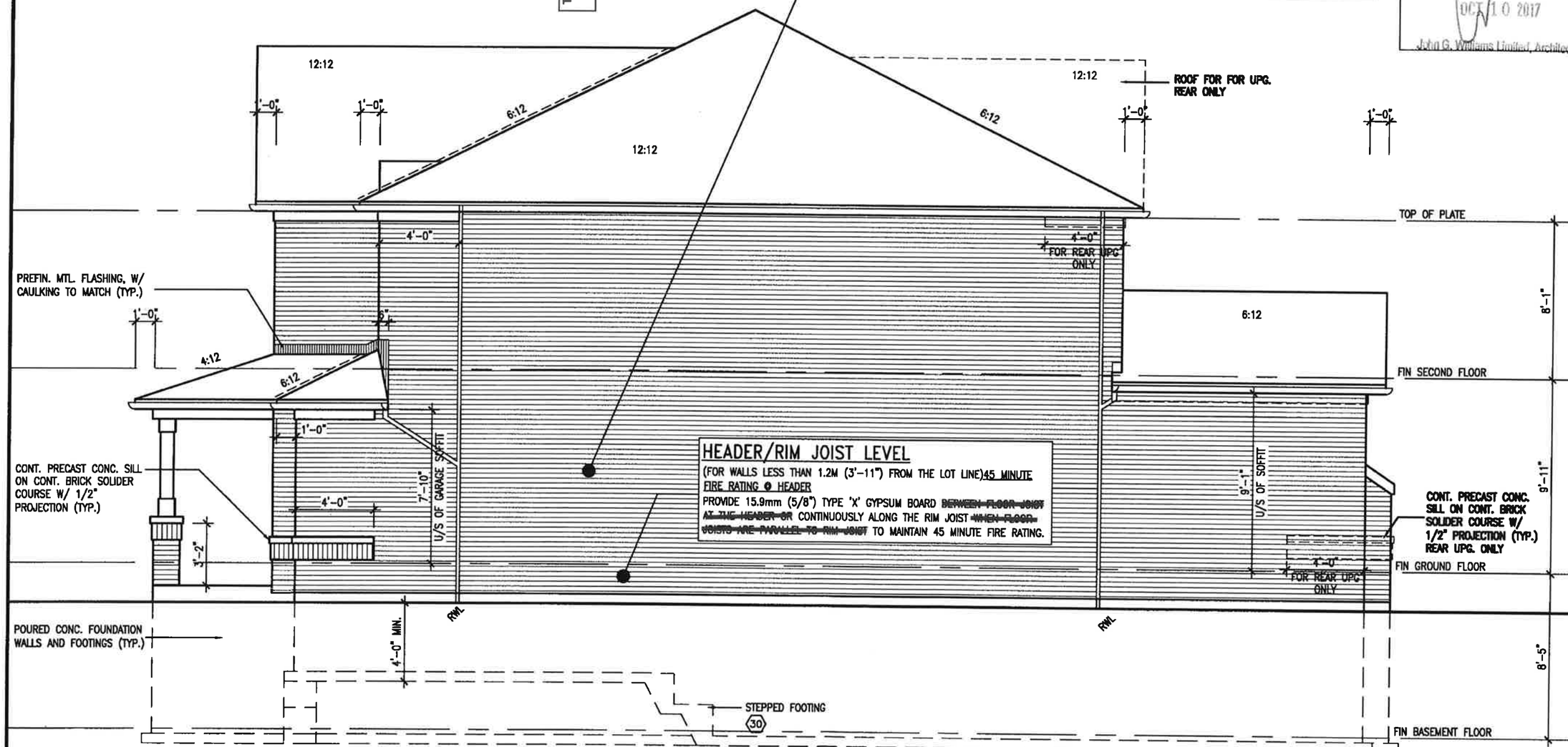

HEADER/RIM JOIST LEVEL

(FOR WALLS LESS THAN 1.2M (3'-11") FROM THE LOT LINE) 45 MINUTE FIRE RATING @ HEADER
PROVIDE 15.9mm (5/8") TYPE 'X' GYPSUM BOARD ~~BETWEEN FLOOR JOIST AT THE HEADER OR~~ CONTINUOUSLY ALONG THE RIM JOIST ~~WHEN FLOOR JOISTS ARE PARALLEL TO RIM JOIST~~ TO MAINTAIN 45 MINUTE FIRE RATING.

RIGHT SIDE ELEVATION 'A'

REFER TO FRONT ELEVATION FOR TYPICAL NOTES & INFORMATION

no.	description	date	by
9	-	-	-
8	-	-	-
7	-	-	-
6	-	-	-
5	-	-	-
4	REVISED AS PER ENG'S COMMENTS	OCT 04-17	RC
3	REVISED TO 10" FOUNDATION WALLS	DEC 12-16	AJE
2	REVISED INSULATION AT STAIRS	SEPT 19/16	SB
1	ISSUED FOR CLIENT REVIEW	JUL 04-16	RC

The undersigned has reviewed and takes responsibility for this design and has the qualifications and meets the requirements set out in the Ontario Building Code to be a designer.

qualification information	name	registration information
	Wellington Jno-Baptiste	25591 BCIN
	VA3 Design Inc.	42658

signature

Contractor must verify all dimensions on the job and report any discrepancies to the Designer before proceeding with the work. All drawings are the property of the Designer and must be returned at the completion of the work. Drawings are not to be scaled.

VA3 DESIGN
255 Consumers Rd Suite 120
Toronto ON M2J 1R4
t 416.630.2255 f 416.630.4782
va3design.com

project name: ALCONA
municipality: INNISFIL, ONTARIO
BAYVIEW WELLINGTON
S30-1
project no. 13049
drawing no. 9
RIGHT SIDE ELEVATION A
date NOV. 2015
drawn by RC
checked by
scale 3/16" = 1'-0"
file name 13049-S30-1
RICHARD - N:\ARCHIVE\WORKING\2013\13049.BW\UNITS\S01\13049-S30-1.dwg - Wed - Oct 4 2017 - 11:49 AM

All drawings, specifications, related documents and design are the copyright property of VA3 DESIGN. Reproduction of this property in whole or in part is strictly prohibited without VA3 DESIGN's written permission.

Town of Innisfil Certified Model
01/12/2017 3:32:29 PM kgervais

LICENSED PROFESSIONAL ENGINEER
S. J. BOYD
PROVINCE OF ONTARIO
OCT 4,2017

It is the builder's complete responsibility to ensure that all plans submitted for approval fully comply with the Architectural Guidelines and all applicable regulations and requirements including zoning provisions and any provisions in the subdivision agreement. The Control Architect is not responsible in any way for examining or approving site (lotting) plans or working drawings with respect to any zoning or building code or permit matter or that any house can be properly built or located on its lot.

This is to certify that these plans comply with the applicable Architectural Design Guidelines approved by the Town of INNISFIL.

OCT 10 2017

John G. Williams Limited, Architect

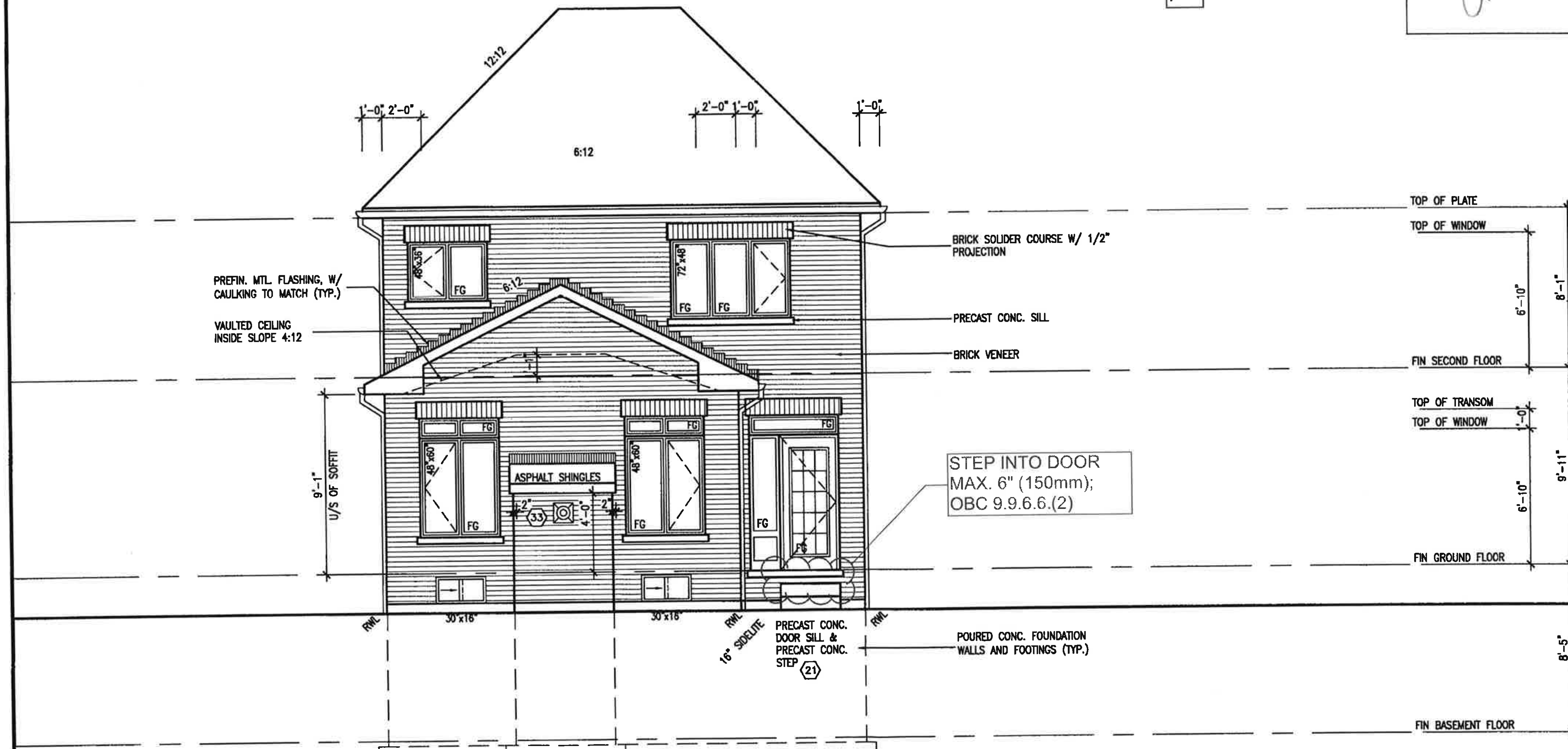

REAR ELEVATION 'A/B/C'

REFER TO FRONT ELEVATION FOR TYPICAL NOTES & INFORMATION

no.	description	date	by
9	.	.	.
8	.	.	.
7	.	.	.
6	.	.	.
5	.	.	.
4	REVISED AS PER ENG'S COMMENTS	OCT 04-17	RC
3	REVISED TO 10" FOUNDATION WALLS	DEC 12-16	AJE
2	REVISED INSULATION AT STAIRS	SEPT 19/16	SB
1	ISSUED FOR CLIENT REVIEW	JUL 04-16	RC

The undersigned has reviewed and takes responsibility for this design and has the qualifications and meets the requirements set out in the Ontario Building Code to be a Designer.
qualification information
Wellington Jno-Baptiste — signature — 25591
name — BCIN
registration information
VA3 Design Inc. — 42658

Contractor must verify all dimensions on the job and report any discrepancy to the Designer before proceeding with the work. All drawings and specifications are instruments of service and the property of the Designer which must be returned at the completion of the work. Drawings are not to be scaled.

VA3 DESIGN
255 Consumers Rd Suite 120
Toronto ON M2J 1R4
t 416.630.2255 f 416.630.4782
va3design.com

BAYVIEW WELLINGTON — **S30-1**

project name: ALCONA
municipality: INNISFIL, ONTARIO
project no.: 13049
date: NOV. 2015
drawn by: RC
checked by: .
scale: 3/16" = 1'-0"
REAR ELEVATION
file name: 13049-S30-1
drawing no.: 10

RICHARD – H:\ARCHIVE\WORKING\2013\13049.BW\UNITS\30'\13049-S30-1.dwg – Wed – Oct 4 2017 – 11:49 AM

All drawings specifications, related documents and design are the copyright property of VA3 DESIGN. Reproduction of this property in whole or in part is strictly prohibited without VA3 DESIGN's written permission.

UNINSULATED OPENINGS (PER OBC. SB-12,3.1.1(7))

30-1 ELEVATION B	ENERGY EFFICIENCY – OBC SB12		
ELEVATION	WALL AREA S.F.	OPENING S.F.	PERCENTAGE
FRONT	482 S.F.	121.722 S.F.	25.25 %
LEFT SIDE	1012 S.F.	90.667 S.F.	8.96 %
RIGHT SIDE	1012 S.F.	0 S.F.	0.00 %
REAR	482 S.F.	125.917 S.F.	26.12 %
* OPENINGS OMITTED AS PER SB-12 3.1.1.9(4) MAX 19.9 S.F. REFER TO ELEVATION FOR LOCATION		0 S.F.	
TOTAL SQ. FT.	2988.00 S.F.	338.31 S.F.	11.32 %
TOTAL SQ. M.	277.59 S.M.	31.43 S.M.	11.32 %

Town of Innisfil Certified Model
01/12/2017 3:32:36 PM kgervais

LICENSED PROFESSIONAL ENGINEER S. J. BOYD PROVINCE OF ONTARIO
OCT 4, 2017

It is the builder's complete responsibility to ensure that all plans submitted for approval fully comply with the Architectural Guidelines and all applicable regulations and requirements including zoning provisions and any provisions in the subdivision agreement. The Control Architect is not responsible in any way for examining or approving site (lotting) plans or working drawings with respect to any zoning or building code or permit matter or that any house can be properly built or located on its lot.

This is to certify that these plans comply with the applicable Architectural Design Guidelines approved by the Town of INNISFIL.

ARCHITECTURAL REVIEW & APPROVAL
OCT 10 2017
John G. Williams Limited, Architect

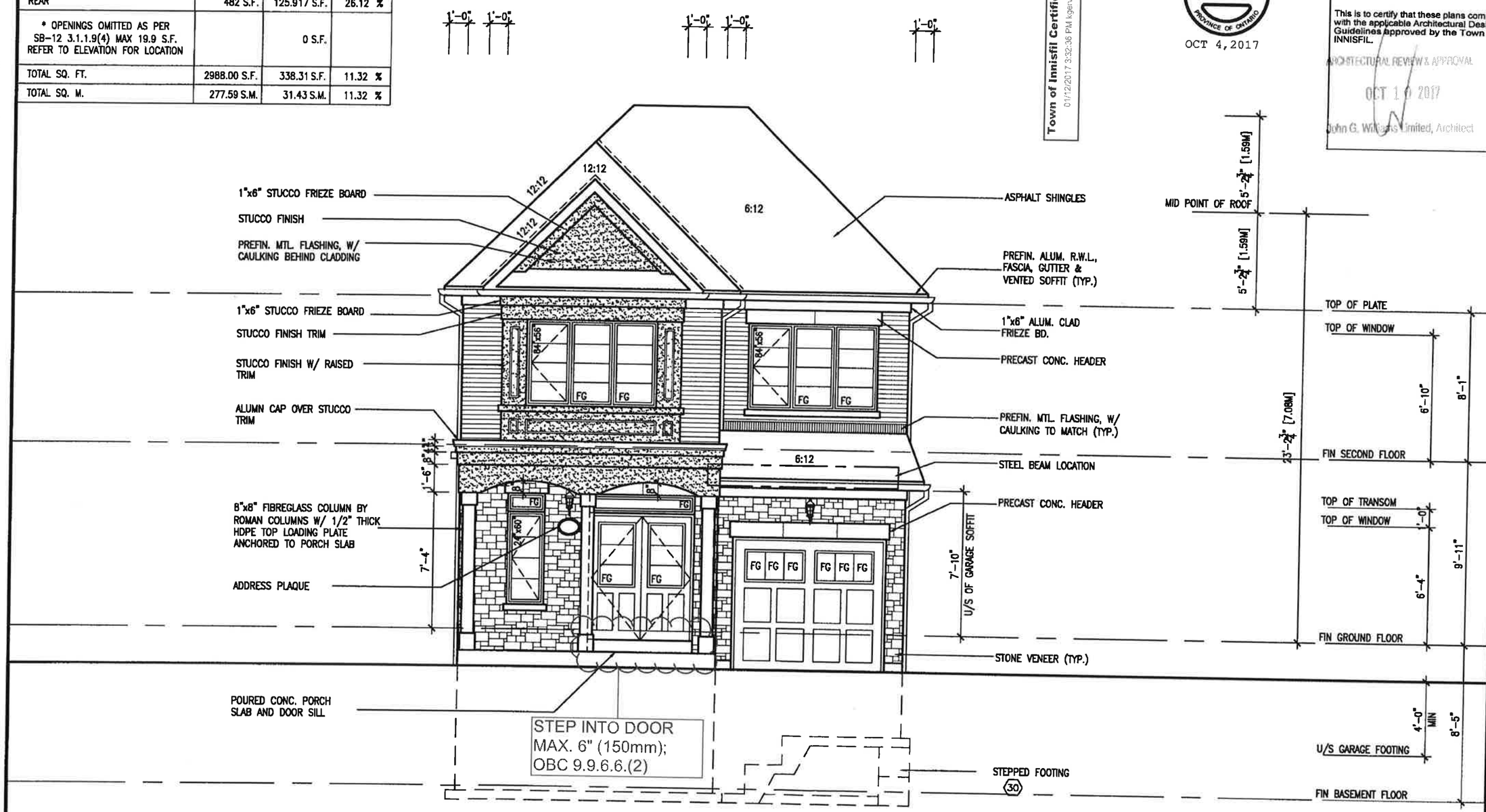

FRONT ELEVATION 'B'

no.	description	date	by
9	-	-	-
8	-	-	-
7	-	-	-
6	-	-	-
5	-	-	-
4	REVISED AS PER ENG'S COMMENTS	OCT 04-17	RC
3	REVISED TO 10" FOUNDATION WALLS	DEC 12-16	AJF
2	REVISED INSULATION AT STAIRS	SEPT 19/16	SB
1	ISSUED FOR CLIENT REVIEW	JUL 04-16	RC

The undersigned has reviewed and takes responsibility for this design and has the qualifications to meet the requirements set out in the Ontario Building Code to be a Designer.

qualification information
Wellington Jno-Baptiste
signature

name	registration information
VA3 Design Inc.	42658
Wellington Jno-Baptiste	25591

Contractor must verify all dimensions on the job and report any discrepancy to the Designer before proceeding with the work. All drawings and specifications are instruments of service and the property of the Designer which must be returned at the completion of the work. Drawings are not to be scaled.

All drawings specifications, related documents and design are the copyright property of VA3 DESIGN. Reproduction of this property in whole or in part is strictly prohibited without VA3 DESIGN's written permission.

BAYVIEW WELLINGTON

S30-1

project name: ALCONA
municipality: INNISFIL, ONTARIO
FRONT ELEVATION B
project no. 13049
drawing no. 11
date: NOV. 2015
drawn by: RC
checked by:
scale: 3/16" = 1'-0"
file name: 13049-S30-1
RICHARD – H:\ARCHIVE\WORKING\2013\13049.BW\UNITS\30^\13049-S30-1.dwg – Wed – Oct 4 2017 – 11:49 AM

VA3 DESIGN
255 Consumers Rd Suite 120
Toronto ON M2J 1R4
t 416.630.4782
f 416.630.2235
va3design.com

Town of Innisfil Certified Model
01/12/2017 3:32:39 PM kgervais

LICENSED PROFESSIONAL ENGINEER S. J. BOYD PROVINCE OF ONTARIO
OCT 4,2017

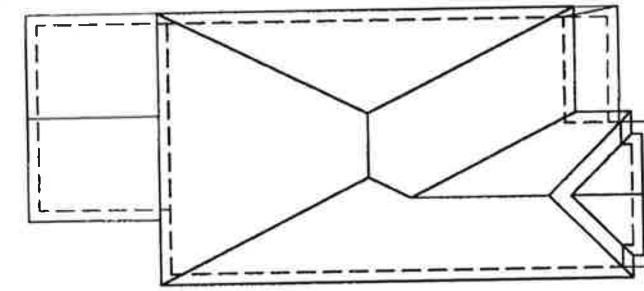

ROOF PLAN 'B'

It is the builder's complete responsibility to ensure that all plans submitted for approval fully comply with the Architectural Guidelines and all applicable regulations and requirements including zoning provisions and any provisions in the subdivision agreement. The Control Architect is not responsible in any way for examining or approving site (lotting) plans or working drawings with respect to any zoning or building code or permit matter or that any house can be properly built or located on its lot.

This is to certify that these plans comply with the applicable Architectural Design Guidelines approved by the Town of INNISFIL.

ARCHITECTURAL REVIEW & APPROVAL
OCT 10 2017
John G. Williams Limited, Architect

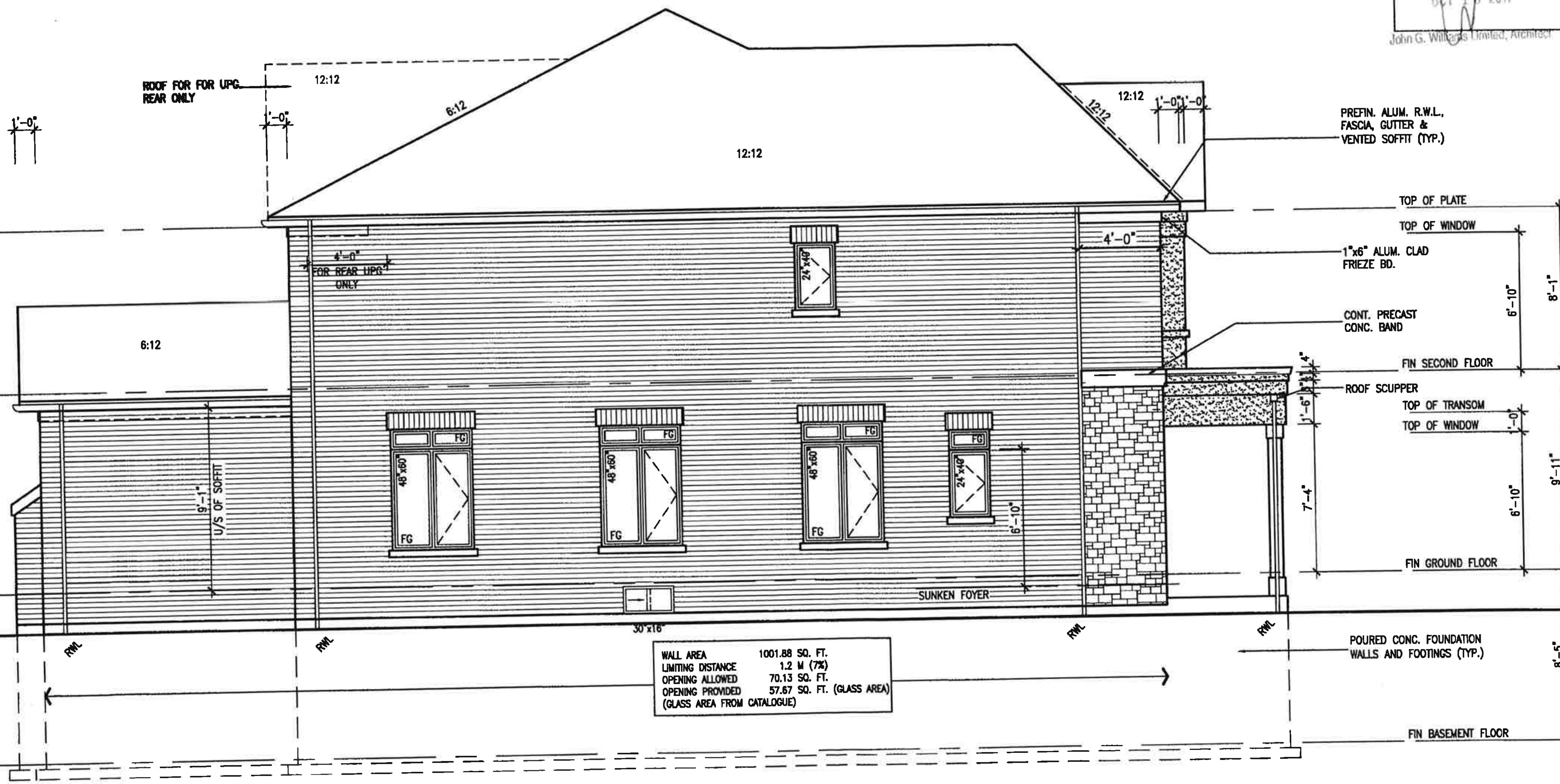

LEFT SIDE ELEVATION 'B'

REFER TO FRONT ELEVATION FOR TYPICAL NOTES & INFORMATION

BAYVIEW WELLINGTON

S30-1

project name: ALCONA
municipality: INNISFIL, ONTARIO
LEFT SIDE ELEVATION B
date: NOV. 2015
drawn by: RC
scale: 3/16" = 1'-0"
project no. 13049
drawing no. 12
file name: 13049-S30-1

VA3 DESIGN
255 Consumers Rd Suite 120
Toronto ON M2J 1R4
t 416.630.2255 f 416.630.4782
va3design.com

The undersigned has reviewed and takes responsibility for this design and has the qualifications and meets the requirements set out in the Ontario Building Code to be a Designer.

qualification information: Wellington Jno-Baptiste 25591
registration information: VA3 Design Inc. 42658

no.	description	date	by
1	ISSUED FOR CLIENT REVIEW	JUL 04-16	RC
2	REVISED INSULATION AT STAIRS	SEPT 19/16	SB
3	REVISED TO 10" FOUNDATION WALLS	DEC 12-16	AJE
4	REVISED AS PER ENG'S COMMENTS	OCT 04-17	RC
5			
6			
7			
8			
9			

All drawings specifications, related documents and design are the copyright property of VA3 DESIGN. Reproduction of this property in whole or in part is strictly prohibited without VA3 DESIGN's written permission.

Town of Innisfil Certified Model
01/12/2017 3:32:45 PM kgervais

LICENSED PROFESSIONAL ENGINEER
S. J. BOYD
PROVINCE OF ONTARIO
OCT 4,2017

BRICK VENEER CONSTRUCTION

(FOR WALLS LESS THAN 1.2M (3'-11") FROM THE LOT LINE)
45 MINUTE FIRE RATED WALL
PROVIDE A CONTINUOUS LAYER OF 12.7mm (1/2") TYPE 'X' GYPSUM BOARD (INTERIOR SIDE) INSTALLED SO THAT ALL EDGES ARE SUPPORTED, TAPED AND FILLED. SPACE BETWEEN WOOD STUDS TO BE FILLED WITH INSULATION CONFORMING TO CAN/ULC-S702, "MINERAL FIBRE THERMAL INSULATION FOR BUILDINGS" WITH A MASS OF NOT LESS THAN 1.22 Kg/SQ.M. AND MUST FILL AT LEAST 90% OF THE CAVITY THICKNESS. THE TYPE 'X' & INSULATION MUST BE RUN CONTINUOUSLY BEHIND ALL INTERSECTING PARTITIONS, MECHANICAL CHASES, BATHTUBS, SHOWERS, ETC. ENSURE INSULATION & TYPE 'X' IS INSTALLED IN GARAGE EXTERIOR WALLS.
(REFER TO SECTION SB-2 OF OBC 2012-SUPPLEMENTARY STANDARDS)

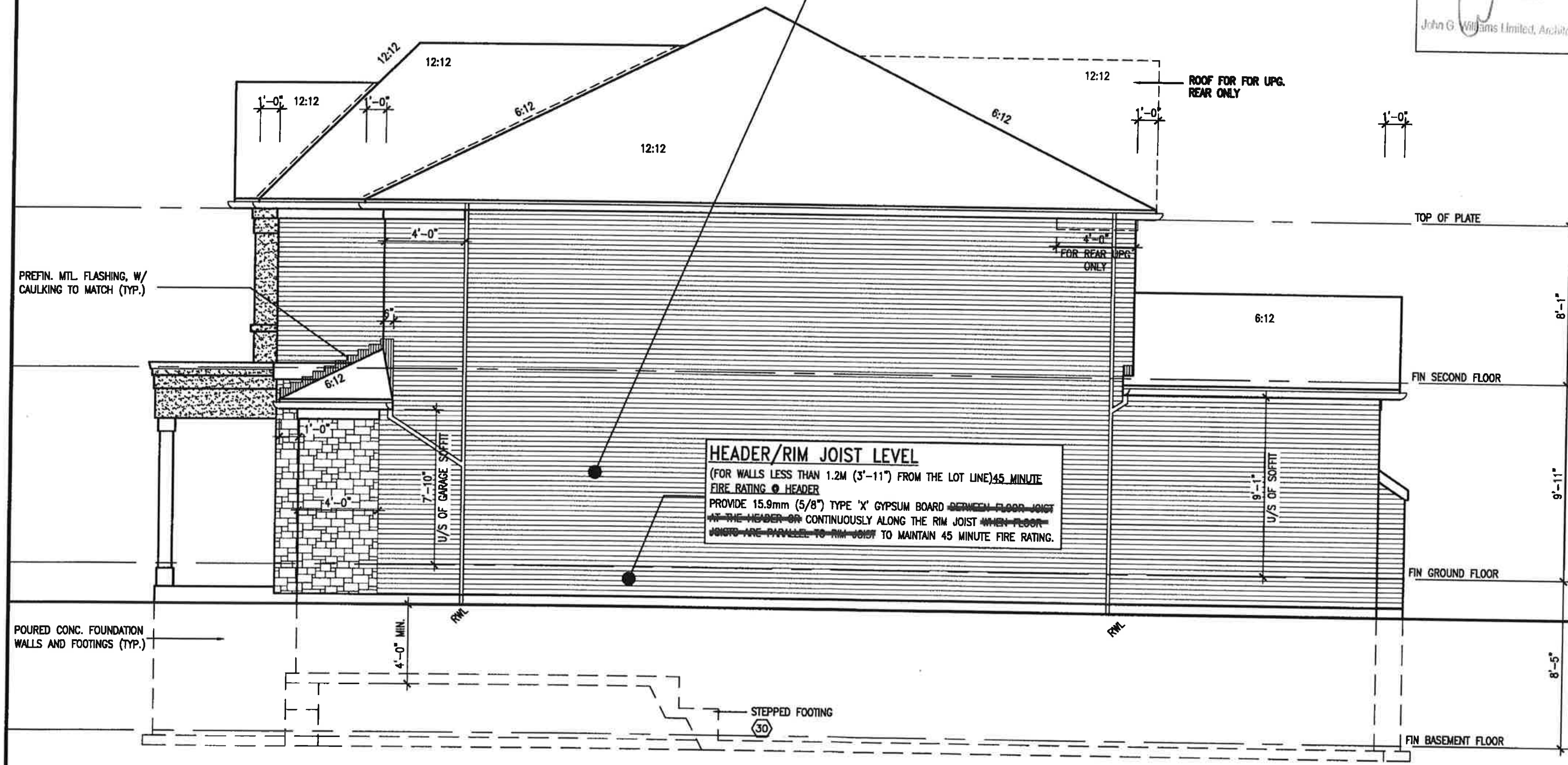

HEADER/RIM JOIST LEVEL

(FOR WALLS LESS THAN 1.2M (3'-11") FROM THE LOT LINE) 45 MINUTE FIRE RATING @ HEADER
PROVIDE 15.9mm (5/8") TYPE 'X' GYPSUM BOARD ~~BETWEEN FLOOR JOIST AT THE HEADER OR~~ CONTINUOUSLY ALONG THE RIM JOIST ~~WHEN FLOOR JOISTS ARE PARALLEL TO RIM JOIST~~ TO MAINTAIN 45 MINUTE FIRE RATING.

RIGHT SIDE ELEVATION 'B'

REFER TO FRONT ELEVATION FOR TYPICAL NOTES & INFORMATION

It is the builder's complete responsibility to ensure that all plans submitted for approval fully comply with the Architectural Guidelines and all applicable regulations and requirements including zoning provisions and any provisions in the subdivision agreement. The Control Architect is not responsible in any way for examining or approving site (lotting) plans or working drawings with respect to any zoning or building code or permit matter or that any house can be properly built or located on its lot.

This is to certify that these plans comply with the applicable Architectural Design Guidelines approved by the Town of INNISFIL.

ARCHITECTURAL REVIEW & APPROVAL
OCT 10 2017
John G. Williams Limited, Architect

BAYVIEW WELLINGTON
S30-1
project no. 13049
drawing no. 13
municipality INNISFIL, ONTARIO
RIGHT SIDE ELEVATION B
file name 13049-S30-1
project name ALCONA
date NOV. 2015
drawn by RC
checked by
scale 3/16" = 1'-0"
RICHARD - H:\ARCHIVE\WORKING\2013\13049.BW\UNITS\30'\13049-S30-1.dwg - Wed - Oct 4 2017 - 11:49 AM

All drawings specifications, related documents and design are the copyright property of VA3 DESIGN. Reproduction of this property in whole or in part is strictly prohibited without VA3 DESIGN's written permission.

VA3 DESIGN
255 Consumers Rd Suite 120
Toronto ON M2J 1R4
t 416.630.2255 f 416.630.4782
va3design.com

The undersigned has reviewed and takes responsibility for this design and has the qualifications and meets the requirements set out in the Ontario Building Code to be a Designer.
qualification information
Wellington Jno-Baptiste — signature — BCIN 25591
registration information
VA3 Design Inc. — BCIN 42658

Contractor must verify all dimensions on the job and report any discrepancy to the Designer before proceeding with the work. All drawings and specifications are instruments of service and the property of the Designer which must be returned at the completion of the work. Drawings are not to be scaled.

no.	description	date	by
9	.		.
8	.		.
7	.		.
6	.		.
5	.		.
4	REVISED AS PER ENG'S COMMENTS	OCT 04-17	RC
3	REVISED TO 10" FOUNDATION WALLS	DEC 12-16	AJE
2	REVISED INSULATION AT STAIRS	SEPT 19/16	SB
1	ISSUED FOR CLIENT REVIEW	JUL 04-16	RC

UNINSULATED OPENINGS (PER OBC. SB-12,3.1.1(7))

30-1 ELEVATION A	ENERGY EFFICIENCY - OBC SB12		
ELEVATION	WALL AREA S.F.	OPENING S.F.	PERCENTAGE
FRONT	482 S.F.	112.389 S.F.	23.32 %
LEFT SIDE	1002 S.F.	90.667 S.F.	9.05 %
RIGHT SIDE	1002 S.F.	0 S.F.	0.00 %
REAR	482 S.F.	125.917 S.F.	26.12 %
* OPENINGS OMITTED AS PER SB-12 3.1.1.9(4) MAX 19.9 S.F. REFER TO ELEVATION FOR LOCATION		0 S.F.	
TOTAL SQ. FT.	2968.00 S.F.	328.97 S.F.	11.08 %
TOTAL SQ. M.	275.73 S.M.	30.56 S.M.	11.08 %

Town of Innisfil Certified Model
01/12/2017 3:32:51 PM kgervais

S. J. BOYD
LICENSED PROFESSIONAL ENGINEER
PROVINCE OF ONTARIO
OCT 4,2017

It is the builder's complete responsibility to ensure that all plans submitted for approval fully comply with the Architectural Guidelines and all applicable regulations and requirements including zoning provisions and any provisions in the subdivision agreement. The Control Architect is not responsible in any way for examining or approving site (lotting) plans or working drawings with respect to any zoning or building code or permit matter or that any house can be properly built or located on its lot.

This is to certify that these plans comply with the applicable Architectural Design Guidelines approved by the Town of INNISFIL.

ARCHITECTURAL REVIEW & APPROVAL
OCT 10 2017
John G. Williams Limited, Architect

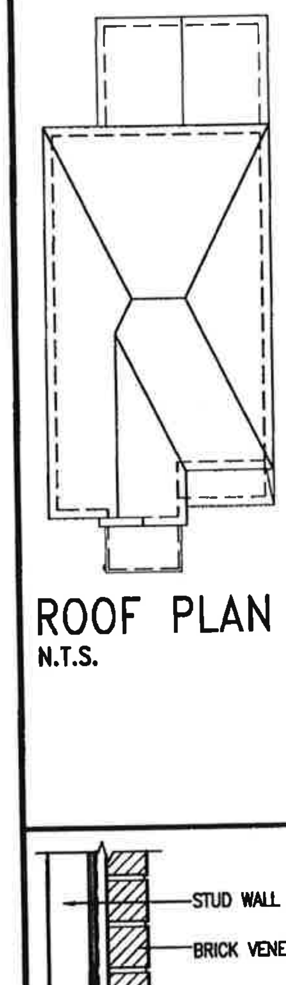

ROOF PLAN 'C'
N.T.S.

FRONT ELEVATION 'C'

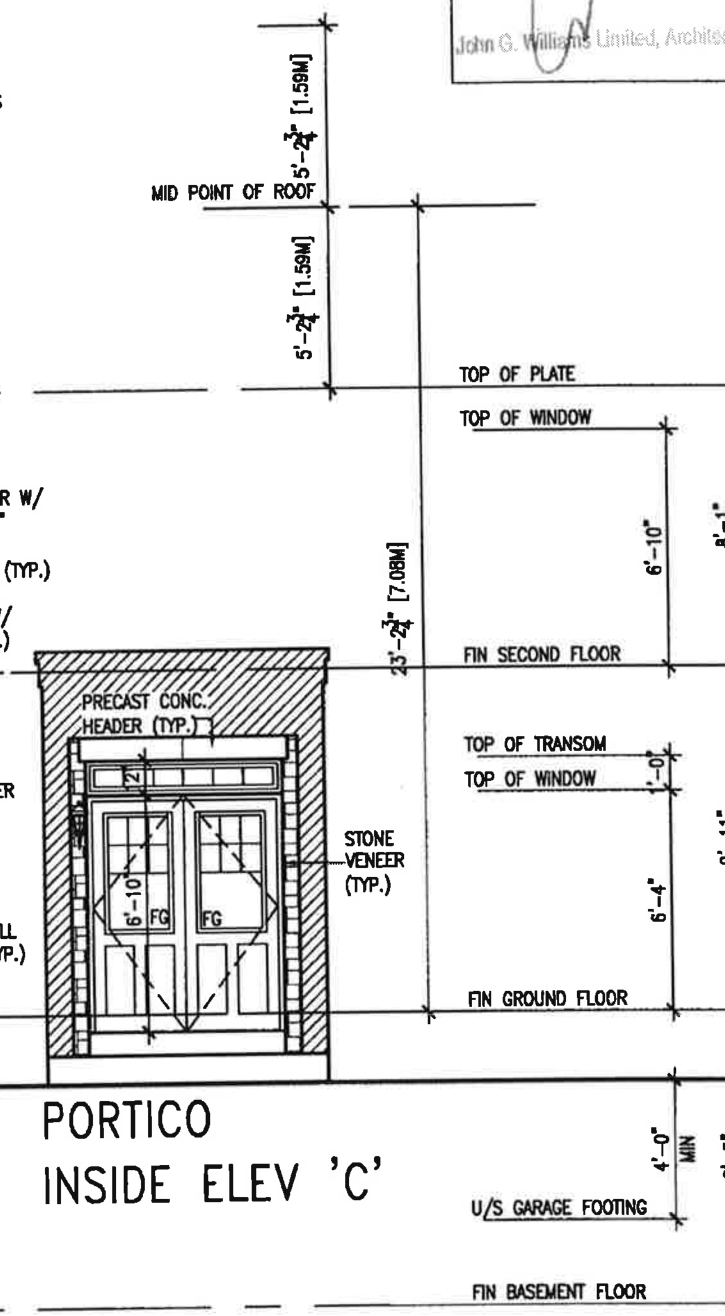

PORTICO
INSIDE ELEV 'C'

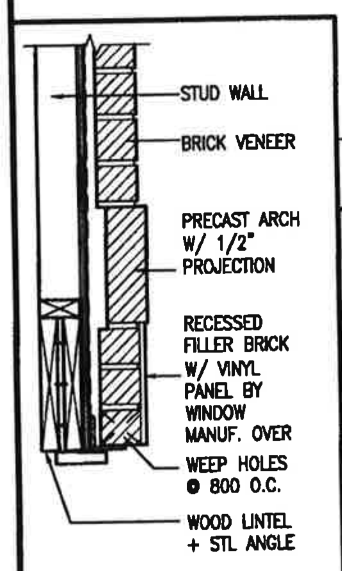

Y PREC. ARCH W/ VINYL PANEL BELOW DETAIL
N.T.S.

no.	description	date	by
9			
8			
7			
6			
5			
4	REVISED AS PER ENG'S COMMENTS	OCT 04-17	RC
3	REVISED TO 10" FOUNDATION WALLS	DEC 12-16	AE
2	REVISED INSULATION AT STAIRS	SEPT 19/16	SB
1	ISSUED FOR CLIENT REVIEW	JUL 04-16	RC

The undersigned has reviewed and takes responsibility for this design and has the qualifications and meets the requirements set out in the Ontario Building Code to be a Designer.
qualification information
Wellington Jno-Baptiste 25591
registration information
VA3 Design Inc. 42658

Contractor must verify all dimensions on the job and report any discrepancy to the Designer before proceeding with the work. All drawings and specifications are instruments of service and the property of the Designer which must be returned at the completion of the work. Drawings are not to be scaled.

VA3 DESIGN
255 Consumers Rd Suite 120
Toronto ON M2J 1R4
t 416.630.2255 f 416.630.4782
va3design.com

All drawings specifications, related documents and designs are the copyright property of VA3 DESIGN. Reproduction of this property in whole or in part is strictly prohibited without VA3 DESIGN's written permission.

BAYVIEW WELLINGTON
project name: ALCONA
municipality: INNISFIL, ONTARIO
date: NOV. 2015
drawn by: RC
checked by:
scale: 3/16" = 1'-0"
FRONT ELEVATION C
file name: 13049-S30-1
RICHARD - H:\ARCHIVE\WORKING\2013\13049.BW\UNITS\30\13049-S30-1.dwg - Wed - Oct 4 2017 - 11:49 AM

S30-1
project no. 13049
drawing no. **14**

Town of Innisfil Certified Model
01/12/2017 3:32:57 PM kgervais

LICENSED PROFESSIONAL ENGINEER
S. J. BOYD
PROVINCE OF ONTARIO
OCT 4, 2017

It is the builder's complete responsibility to ensure that all plans submitted for approval fully comply with the Architectural Guidelines and all applicable regulations and requirements including zoning provisions and any provisions in the subdivision agreement. The Control Architect is not responsible in any way for examining or approving site (lotting) plans or working drawings with respect to any zoning or building code or permit matter or that any house can be properly built or located on its lot.

This is to certify that these plans comply with the applicable Architectural Design Guidelines approved by the Town of INNISFIL.

ARCHITECTURAL REVIEW & APPROVAL
OCT 10 2017
John G. Williams Limited, Architect

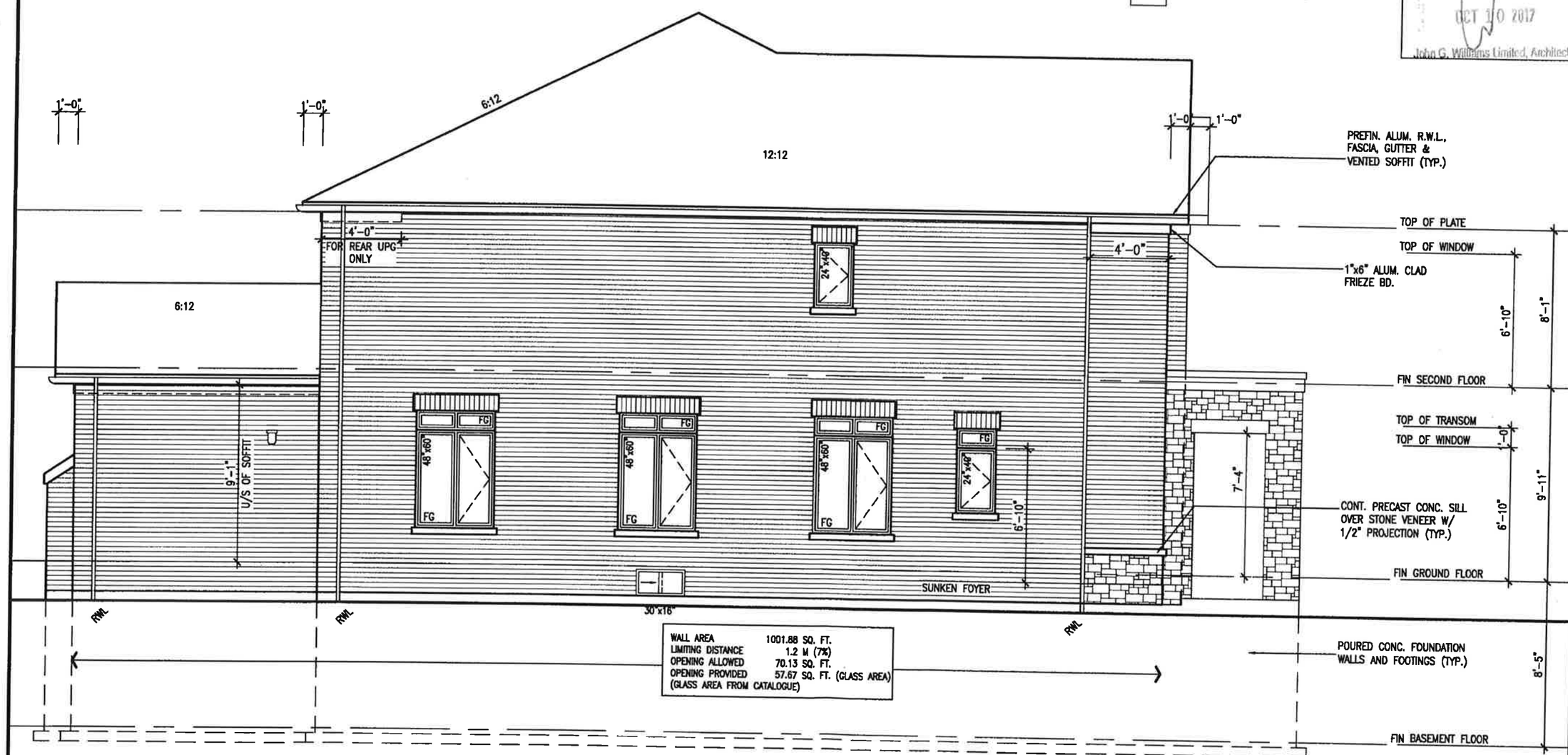

WALL AREA	1001.88 SQ. FT.
LIMITING DISTANCE	1.2 M (7%)
OPENING ALLOWED	70.13 SQ. FT.
OPENING PROVIDED (GLASS AREA FROM CATALOGUE)	57.67 SQ. FT. (GLASS AREA)

LEFT SIDE ELEVATION 'C'

REFER TO FRONT ELEVATION FOR TYPICAL NOTES & INFORMATION

project name	ALCONA
municipality	INNISFIL, ONTARIO
project no.	13049
drawing no.	15
date	NOV. 2015
drawn by	RC
checked by	
scale	3/16" = 1'-0"
file name	13049-S30-1

BAYVIEW WELLINGTON

S30-1

LEFT SIDE ELEVATION C

RICHARD – H:\ARCHIVE\WORKING\2013\13049.BWI\UNITS\S01\13049-S30-1.dwg – Wed – Oct 4 2017 – 11:49 AM

VA3 DESIGN
255 Consumers Rd Suite 120
Toronto ON M2J 1R4
t 416.630.2255 f 416.630.4782
va3design.com

This undersigned has reviewed and takes responsibility for this design, and has the qualifications and meets the requirements set out in the Ontario Building Code to be a Designer.

qualification information		
Wellington Jno-Baptiste	25591	BCIN
name	42658	
registration information		
VA3 Design Inc.		

Contractor must verify all dimensions on the job and report any discrepancy to the Designer before proceeding with the work. All drawings and specifications are instruments of service and the property of the Designer which must be returned at the completion of the work. Drawings are not to be scaled.

no.	description	date	by
9			
8			
7			
6			
5			
4	REVISED AS PER ENG'S COMMENTS	OCT 04–17	RC
3	REVISED TO 10" FOUNDATION WALLS	DEC 12–16	AJE
2	REVISED INSULATION AT STAIRS	SEPT 19/16	SB
1	ISSUED FOR CLIENT REVIEW	JUL 04–16	RC

All drawings specifications, related documents and designs are the copyright property of VA3 DESIGN. Reproduction of this property in whole or in part is strictly prohibited without VA3 DESIGN's written permission.

Town of Innisfil Certified Model
01/12/2017 3:33:02 PM kgervais

BRICK VENEER CONSTRUCTION

(FOR WALLS LESS THAN 1.2M (3'-11") FROM THE LOT LINE)
45 MINUTE FIRE RATED WALL
PROVIDE A CONTINUOUS LAYER OF 12.7mm (1/2") TYPE 'X' GYPSUM BOARD (INTERIOR SIDE) INSTALLED SO THAT ALL EDGES ARE SUPPORTED, TAPED AND FILLED. SPACE BETWEEN WOOD STUDS TO BE FILLED WITH INSULATION CONFORMING TO CAN/ULC-S702, "MINERAL FIBRE THERMAL INSULATION FOR BUILDINGS" WITH A MASS OF NOT LESS THAN 1.22 Kg/SQ.M. AND MUST FILL AT LEAST 90% OF THE CAVITY THICKNESS. THE TYPE 'X' & INSULATION MUST BE RUN CONTINUOUSLY BEHIND ALL INTERSECTING PARTITIONS, MECHANICAL CHASES, BATHTUBS, SHOWERS, ETC. ENSURE INSULATION & TYPE 'X' IS INSTALLED IN GARAGE EXTERIOR WALLS.
(REFER TO SECTION SB-2 OF OBC 2012-SUPPLEMENTARY STANDARDS)

It is the builder's complete responsibility to ensure that all plans submitted for approval fully comply with the Architectural Guidelines and all applicable regulations and requirements including zoning provisions and any provisions in the subdivision agreement. The Control Architect is not responsible in any way for examining or approving site (lotting) plans or working drawings with respect to any zoning or building code or permit matter or that any house can be properly built or located on its lot.

This is to certify that these plans comply with the applicable Architectural Design Guidelines approved by the Town of INNISFIL.
ARCHITECTURAL REVIEW & APPROVAL
OCT 10 2017
John G. Williams Limited, Architect

LICENSED PROFESSIONAL ENGINEER
S. J. BOYD
PROVINCE OF ONTARIO
OCT 4,2017

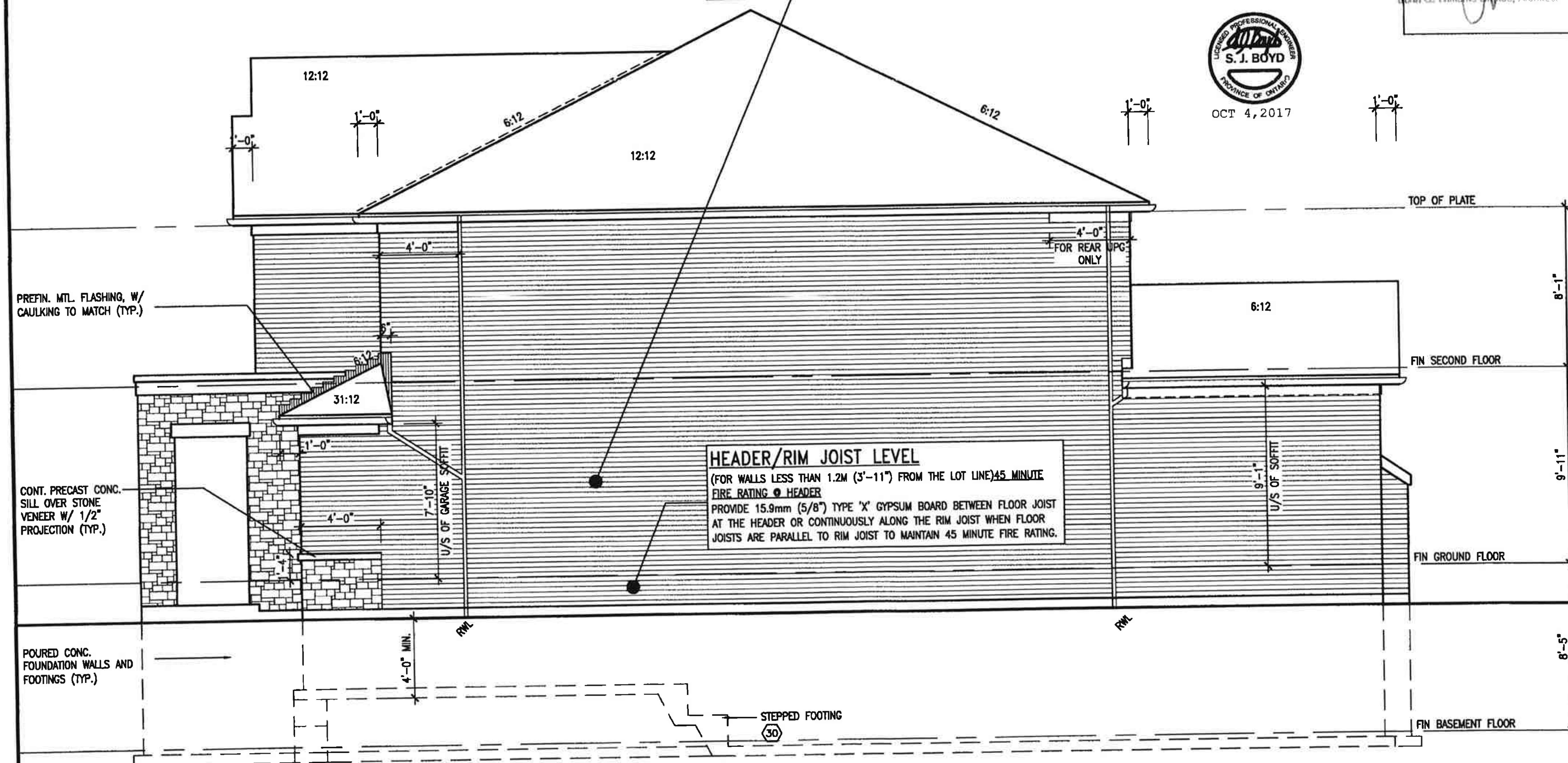

HEADER/RIM JOIST LEVEL

(FOR WALLS LESS THAN 1.2M (3'-11") FROM THE LOT LINE)45 MINUTE FIRE RATING @ HEADER
PROVIDE 15.9mm (5/8") TYPE 'X' GYPSUM BOARD BETWEEN FLOOR JOIST AT THE HEADER OR CONTINUOUSLY ALONG THE RIM JOIST WHEN FLOOR JOISTS ARE PARALLEL TO RIM JOIST TO MAINTAIN 45 MINUTE FIRE RATING.

RIGHT SIDE ELEVATION 'C'

REFER TO FRONT ELEVATION FOR TYPICAL NOTES & INFORMATION

no.	description	date	by
9	.	.	.
8	.	.	.
7	.	.	.
6	.	.	.
5	.	.	.
4	REVISED AS PER ENG'S COMMENTS	OCT 04-17	RC
3	REVISED TO 10" FOUNDATION WALLS	DEC 12-16	AJE
2	REVISED INSULATON AT STAIRS	SEPT 19/16	SB
1	ISSUED FOR CLIENT REVIEW	JUL 04-16	RC

The undersigned has reviewed and takes responsibility for this design and has the qualifications and meets the requirements set out in the Ontario Building Code to be a Designer.
qualification information
Wellington Jno-Baptiste — 25591 (BCIN)
registration information
VA3 Design Inc. — 42658

Contractor must verify all dimensions on the job and report any discrepancy to the Designer before proceeding with the work. All drawings and specifications are instruments of service and the property of the Designer which must be returned at the completion of the work. Drawings are not to be scaled.

VA3 DESIGN
255 Consumers Rd Suite 120
Toronto ON M2J 1R4
t 416.630.2255 f 416.630.4782
va3design.com

BAYVIEW WELLINGTON
project name: ALCONA
municipality: INNISFIL, ONTARIO
date: NOV. 2015
drawn by: RC
checked by: .
scale: 3/16" = 1'-0"
RIGHT SIDE ELEVATION C
file name: 13049-S30-1
S30-1
project no.: 13049
drawing no.: 16

RICHARD – H:\ARCHIVE\WORKING\2013\13049.BW\UNITS\30'\13049-S30-1.dwg – Wed – Oct 4 2017 – 11:49 AM

All drawings specifications, related documents and design are the copyright property of VA3 DESIGN. Reproduction of this property in whole or in part is strictly prohibited without VA3 DESIGN's written permission.

Town of Innisfil Certified Model
01/12/2017 3:33:07 PM kgervais

LICENSED PROFESSIONAL ENGINEER
S. J. BOYD
PROVINCE OF ONTARIO
OCT 4,2017

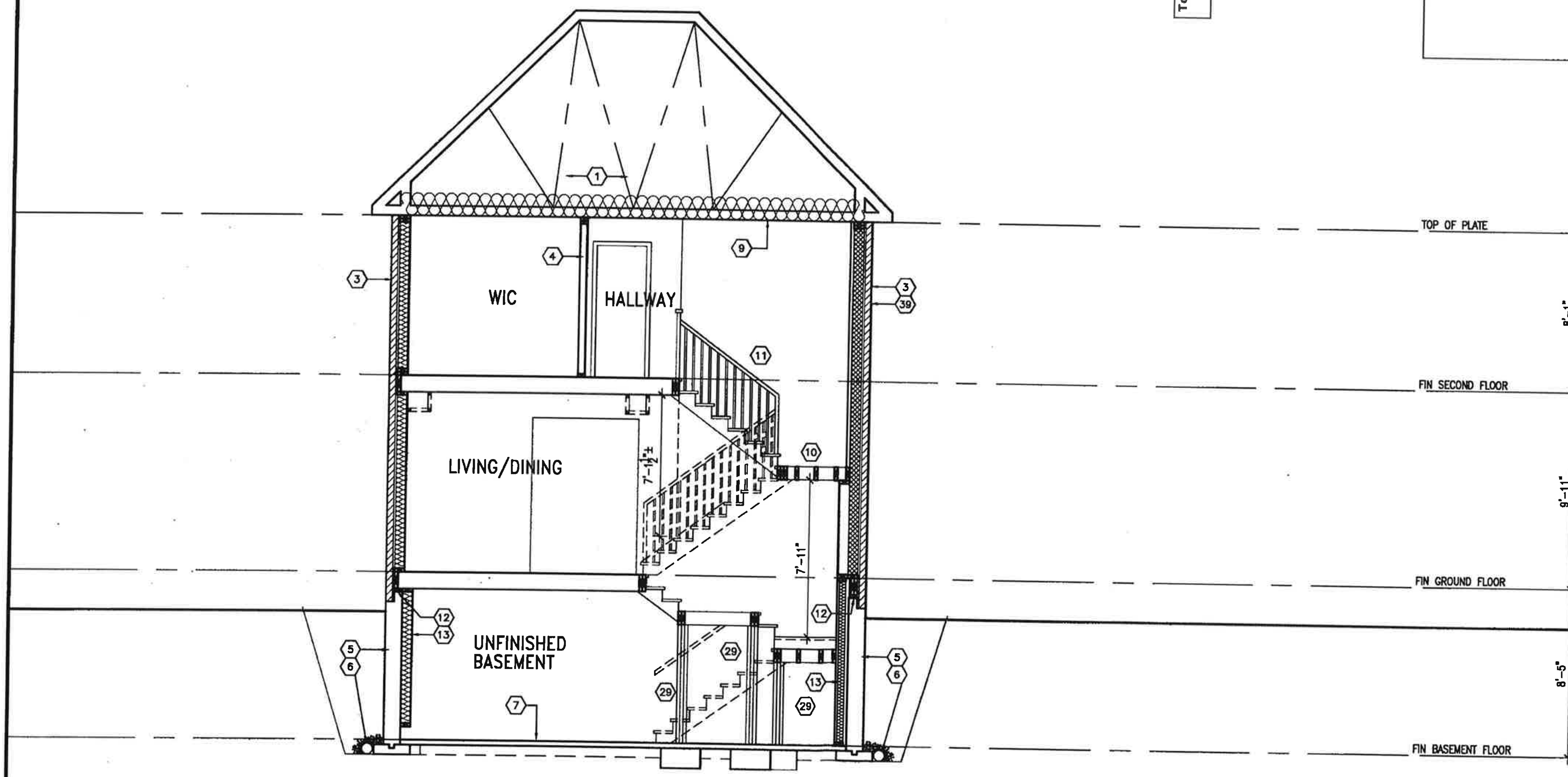

SECTION 'A–A'

It is the builder's complete responsibility to ensure that all plans submitted for approval fully comply with the Architectural Guidelines and all applicable regulations and requirements including zoning provisions and any provisions in the subdivision agreement. The Control Architect is not responsible in any way for examining or approving site (lotting) plans or working drawings with respect to any zoning or building code or permit matter or that any house can be properly built or located on its lot.

This is to certify that these plans comply with the applicable Architectural Design Guidelines approved by the Town of INNISFIL.

The undersigned has reviewed and takes responsibility for this design and has the qualifications and meets the requirements set out in the Ontario Building Code to be a Designer.

qualification information
Wellington Jno-Baptiste 25591
name signature BCIN
registration information
VA3 Design Inc. 42658

Contractor must verify all dimensions on the job and report any discrepancy to the Designer before proceeding with the work. All drawings and specifications are instruments of service and the property of the Designer which must be returned at the completion of the work. Drawings are not to be scaled.

no.	description	date	by
9	.		
8	.		
7	.		
6	.		
5	.		
4	REVISED AS PER ENG'S COMMENTS	OCT 04-17	RC
3	REVISED TO 10" FOUNDATION WALLS	DEC 12-16	AJE
2	REVISED INSULATION AT STAIRS	SEPT 19/16	SB
1	ISSUED FOR CLIENT REVIEW	JUL 04-16	RC

VA3 DESIGN
255 Consumers Rd Suite 120
Toronto ON M2J 1R4
t 416.630.2255 f 416.630.4782
va3design.com

BAYVIEW WELLINGTON

project name ALCONA
municipality INNISFIL, ONTARIO
date NOV. 2015
drawn by RC
checked by .
scale 3/16" = 1'-0"

S30-1

project no. 13049

SECTION 'A–A'

file name 13049-S30-1

drawing no. 17

RICHARD - H:\ARCHIVE\WORKING\2013\13049.BW\UNITS\30'\13049-S30-1.dwg - Wed - Oct 4 2017 - 11:49 AM

All drawings specifications, related documents and design are the copyright property of VA3 DESIGN. Reproduction of this property in whole or in part is strictly prohibited without VA3 DESIGN's written permission.

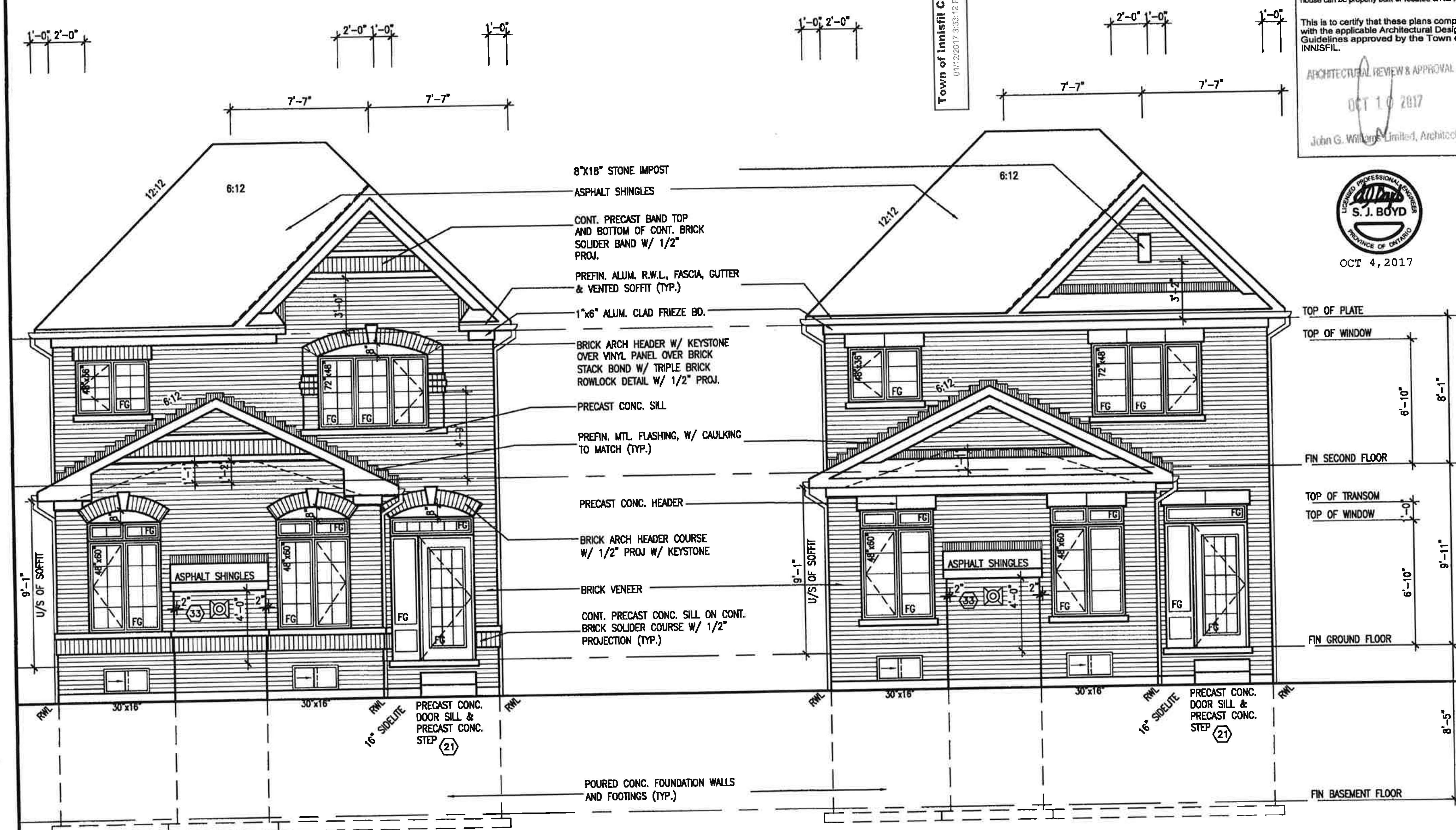

REAR ELEVATION 'A' UPGRADE

REAR ELEVATION 'B' UPGRADE

REFER TO FRONT ELEVATION FOR TYPICAL NOTES & INFORMATION

Town of Innisfil Certified Model
01/12/2017 3:33:12 PM kgervais

It is the builder's complete responsibility to ensure that all plans submitted for approval fully comply with the Architectural Guidelines and all applicable regulations and requirements including zoning provisions and any provisions in the subdivision agreement. The Control Architect is not responsible in any way for examining or approving site (lotting) plans or working drawings with respect to any zoning or building code or permit matter or that any house can be properly built or located on its lot.

This is to certify that these plans comply with the applicable Architectural Design Guidelines approved by the Town of INNISFIL.

ARCHITECTURAL REVIEW & APPROVAL
OCT 10 2017
John G. Williams Limited, Architect

LICENSED PROFESSIONAL ENGINEER
S. J. BOYD
PROVINCE OF ONTARIO
OCT 4,2017

S30-1

BAYVIEW WELLINGTON

project name: ALCONA
municipality: INNISFIL, ONTARIO
REAR ELEVATION 'A' & 'B' UPGRADE
project no. 13049
drawing no. 18
date: NOV. 2015
drawn by: RC
checked by:
scale: 3/16" = 1'-0"
file name: 13049-S30-1
RICHARD – H:\ARCHIVE\WORKING\2013\13049-BW\UNITS\30'\13049-S30-1.dwg – Wed – Oct 4 2017 – 11:49 AM

VA3 DESIGN
255 Consumers Rd Suite 120
Toronto ON M2J 1R4
t 416.630.2255 f 416.630.4782
va3design.com

The undersigned has reviewed and takes responsibility for this design, and has the qualifications and meets the requirements set out in the Ontario Building Code to be a Designer.
qualification information
Wellington Jno-Baptiste — 25591 — BCIN
registration information
VA3 Design Inc. — 42658

Contractor must verify all dimensions on the job and report any discrepancy to the Designer before proceeding with the work. All drawings and specifications are instruments of service and the property of the Designer which must be returned at the completion of the work. Drawings are not to be scaled.

no.	description	date	by
9			
8			
7			
6			
5			
4	REVISED AS PER ENG'S COMMENTS	OCT 04-17	RC
3	REVISED TO 10" FOUNDATION WALLS	DEC 12-16	AJE
2	REVISED INSULATION AT STAIRS	SEPT 19/16	SB
1	ISSUED FOR CLIENT REVIEW	JUL 04-16	RC

All drawings specifications, related documents and design are the copyright property of VA3 DESIGN. Reproduction of this property in whole or in part is strictly prohibited without VA3 DESIGN's written permission.

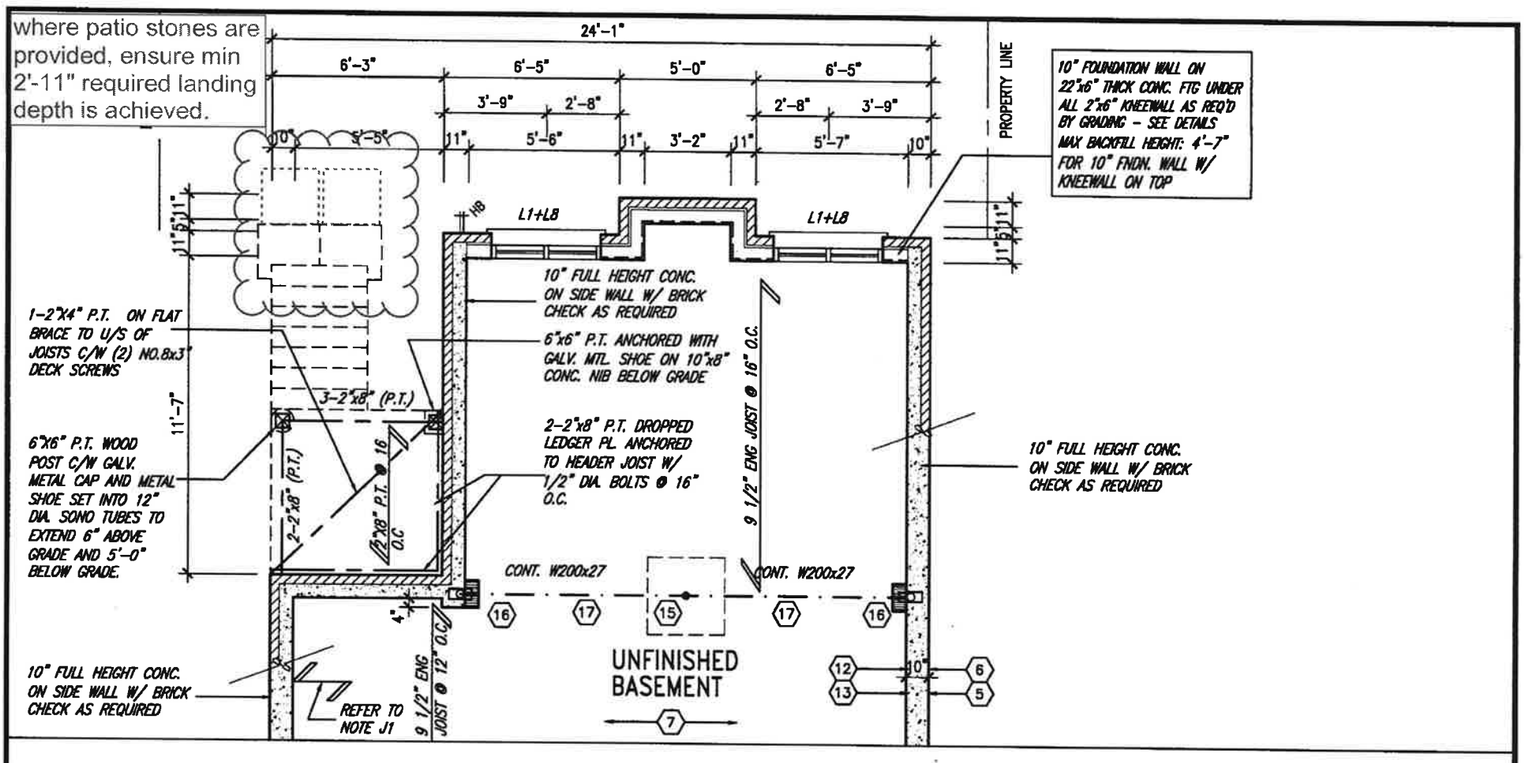

PARTIAL BASEMENT FLOOR PLAN W.O.D.
9R AND MORE COND

LICENSED PROFESSIONAL ENGINEER S. J. BOYD PROVINCE OF ONTARIO

OCT 4,2017

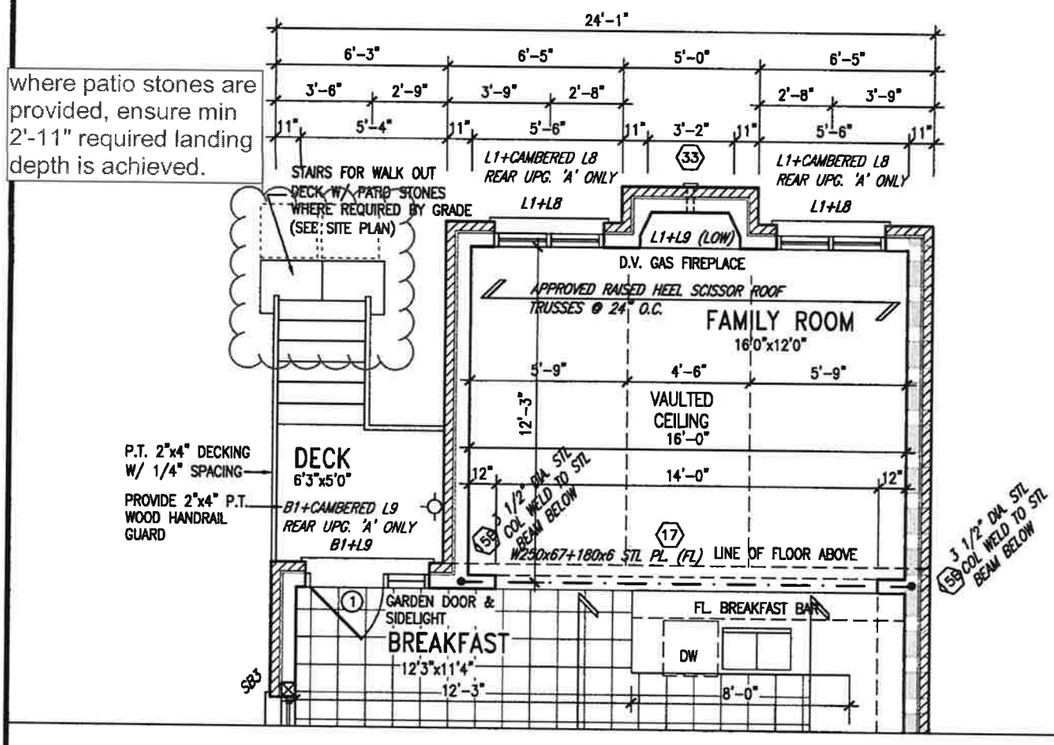

Town of Innisfil Certified Model
01/12/2017 3:33:17 PM kgervais

PARTIAL GROUND FLOOR PLAN W.O.D.
9R AND MORE COND

UNINSULATED OPENINGS (PER OBC. SB-12,3.1.1(7))

30-1 ELEVATION A 9R WOD	ENERGY EFFICIENCY - OBC SB12		
ELEVATION	WALL AREA S.F.	OPENING S.F.	PERCENTAGE
FRONT	482 S.F.	107.722 S.F.	22.35 %
LEFT SIDE	1002 S.F.	90.667 S.F.	9.05 %
RIGHT SIDE	1002 S.F.	0 S.F.	0.00 %
REAR	578 S.F.	145.917 S.F.	25.25 %
* OPENINGS OMITTED AS PER SB-12 3.1.1.9(4) MAX 19.9 S.F. REFER TO ELEVATION FOR LOCATION		0 S.F.	
TOTAL SQ. FT.	3064.00 S.F.	344.31 S.F.	11.24 %
TOTAL SQ. M.	284.65 S.M.	31.99 S.M.	11.24 %

UNINSULATED OPENINGS (PER OBC. SB-12,3.1.1(7))

30-1 ELEVATION B 9R WOD	ENERGY EFFICIENCY - OBC SB12		
ELEVATION	WALL AREA S.F.	OPENING S.F.	PERCENTAGE
FRONT	482 S.F.	121.722 S.F.	25.25 %
LEFT SIDE	1012 S.F.	90.667 S.F.	8.96 %
RIGHT SIDE	1012 S.F.	0 S.F.	0.00 %
REAR	578 S.F.	145.917 S.F.	25.25 %
* OPENINGS OMITTED AS PER SB-12 3.1.1.9(4) MAX 19.9 S.F. REFER TO ELEVATION FOR LOCATION		0 S.F.	
TOTAL SQ. FT.	3084.00 S.F.	358.31 S.F.	11.62 %
TOTAL SQ. M.	286.51 S.M.	33.29 S.M.	11.62 %

It is the builder's complete responsibility to ensure that all plans submitted for approval fully comply with the Architectural Guidelines and all applicable regulations and requirements including zoning provisions and any provisions in the subdivision agreement. The Control Architect is not responsible in any way for examining or approving site (lotting) plans or working drawings with respect to any zoning or building code or permit matter or that any house can be properly built or located on its lot.

This is to certify that these plans comply with the applicable Architectural Design Guidelines approved by the Town of INNISFIL.

ARCHITECTURAL REVIEW & APPROVAL
OCT 1 0 2017
John G. Williams Limited, Architect

no.	description	date	by
9	.	.	.
8	.	.	.
7	.	.	.
6	.	.	.
5	.	.	.
4	REVISED AS PER ENG'S COMMENTS	OCT 04-17	RC
3	REVISED TO 10" FOUNDATION WALLS	DEC 12-16	AJE
2	REVISED INSULATION AT STAIRS	SEPT 19/16	SB
1	ISSUED FOR CLIENT REVIEW	JUL 04-16	RC

The undersigned has reviewed and takes responsibility for this design and has the qualifications and meets the requirements set out in the Ontario Building Code to be a Designer.
qualification information
Wellington Jno-Baptiste — signature — 25591
name — registration information
VA3 Design Inc. — BCIN 42658

Contractor must verify all dimensions on the job and report any discrepancy to the Designer before proceeding with the work. All drawings and specifications are instruments of service and the property of the Designer which must be returned at the completion of the work. Drawings are not to be scaled.

VA3 DESIGN
255 Consumers Rd Suite 120
Toronto ON M2J 1R4
t 416.630.2255 f 416.630.4782
va3design.com

BAYVIEW WELLINGTON — S30-1

project name: ALCONA — municipality: INNISFIL, ONTARIO — project no. 13049

date: NOV. 2015 — PARTIAL FLOOR PLAN WOD — drawing no. 19

drawn by: RC — checked by: — scale: 3/16" = 1'-0" — file name: 13049-S30-1

RICHARD - H:\ARCHIVE\WORKING\2013\13049.BW\UNITS\30"\13049-S30-1.dwg - Wed - Oct 4 2017 - 11:49 AM

All drawings specifications, related documents and design are the copyright property of VA3 DESIGN. Reproduction of this property in whole or in part is strictly prohibited without VA3 DESIGN's written permission.

Town of Innisfil Certified Model
01/12/2017 3:33:26 PM kgervais

LICENSED PROFESSIONAL ENGINEER
S. J. BOYD
PROVINCE OF ONTARIO
OCT 4, 2017

It is the builder's complete responsibility to ensure that all plans submitted for approval fully comply with the Architectural Guidelines and all applicable regulations and requirements including zoning provisions and any provisions in the subdivision agreement. The Control Architect is not responsible in any way for examining or approving site (lotting) plans or working drawings with respect to any zoning or building code or permit matter or that any house can be properly built or located on its lot.

This is to certify that these plans comply with the applicable Architectural Design Guidelines approved by the Town of INNISFIL.

ARCHITECTURAL REVIEW & APPROVAL
OCT 10 2017
John G. Williams Limited, Architect

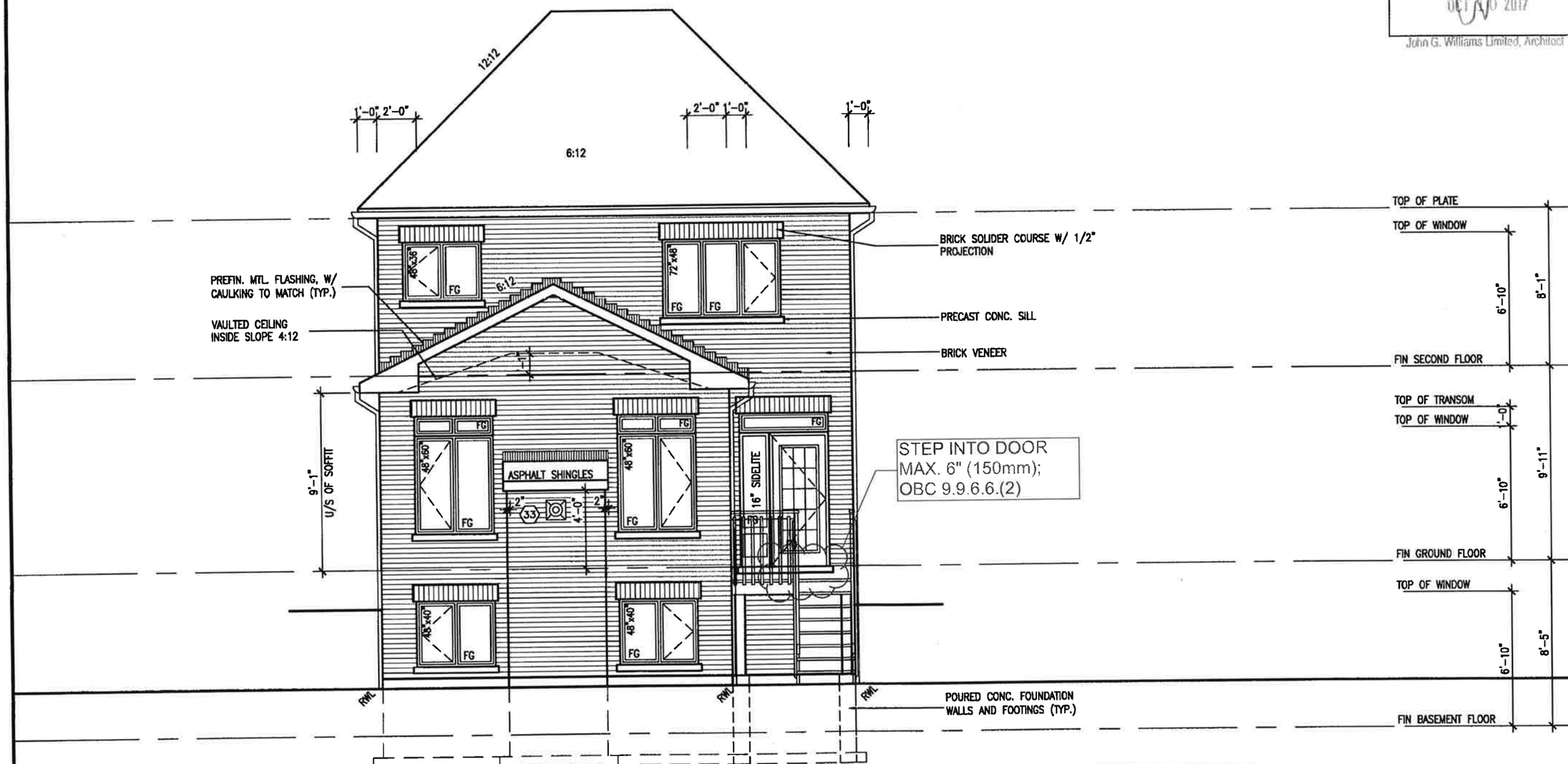

REAR ELEVATION 'A/B' WOD
9R AND MORE COND

BASEMENT WINDOW SIZES
4R-8R USE 30"x24" VINYL CLAD STRUCTURAL STEEL FRAME BASEMENT WINDOWS

REFER TO FRONT ELEVATION FOR TYPICAL NOTES & INFORMATION

no.	description	date	by
9	-	-	-
8	-	-	-
7	-	-	-
6	-	-	-
5	-	-	-
4	REVISED AS PER ENG'S COMMENTS	OCT 04-17	RC
3	REVISED TO 10" FOUNDATION WALLS	DEC 12-16	AJE
2	REVISED INSULATION AT STAIRS	SEPT 19/16	SB
1	ISSUED FOR CLIENT REVIEW	JUL 04-16	RC

The undersigned has reviewed and takes responsibility for this design and has the qualifications and meets the requirements set out in the Ontario Building Code to be a Designer.

qualification information	BCIN
Wellington Jno-Baptiste	25591
name / registration information	BCIN
VA3 Design Inc.	42658

Contractor must verify all dimensions on the job and report any discrepancy to the Designer before proceeding with the work. All drawings and specifications are instruments of service and the property of the Designer which must be returned at the completion of the work. Drawings are not to be scaled.

VA3 DESIGN
255 Consumers Rd Suite 120
Toronto ON M2J 1R4
t 416.630.2255 f 416.630.4782
va3design.com

project name: ALCONA
municipality: INNISFIL, ONTARIO
BAYVIEW WELLINGTON
S30-1
project no. 13049
drawing no. 20
date: NOV. 2015
drawn by: BC
checked by:
scale: 3/16" = 1'-0"
REAR ELEVATION WOD
file name: 13049-S30-1
RICHARD – H:\ARCHIVE\WORKING\2013\13049.BWL\UNITS\S0\13049-S30-1.dwg – Wed – Oct 4, 2017 – 11:49 AM

All drawings specifications, related documents and designs are the copyright property of VA3 DESIGN. Reproduction of this property in whole or in part is strictly prohibited without VA3 DESIGN's written permission.

REAR ELEVATION 'A' UPGRADE WOD 9R AND MORE COND

BASEMENT WINDOW SIZES
4R-8R USE 30"x24" VINYL CLAD STRUCTURAL STEEL FRAME BASEMENT WINDOWS

REAR ELEVATION 'B' UPGRADE WOD 9R AND MORE COND

REFER TO FRONT ELEVATION FOR TYPICAL NOTES & INFORMATION

Town of Innisfil Certified Model
01/12/2017 3:33:32 PM kgervais

It is the builder's complete responsibility to ensure that all plans submitted for approval fully comply with the Architectural Guidelines and all applicable regulations and requirements including zoning provisions and any provisions in the subdivision agreement. The Control Architect is not responsible in any way for examining or approving site (lotting) plans or working drawings with respect to any zoning or building code or permit matter or that any house can be properly built or located on its lot.

This is to certify that these plans comply with the applicable Architectural Design Guidelines approved by the Town of INNISFIL.

ARCHITECTURAL REVIEW & APPROVAL
OCT 10 2017
John G. Williams Limited, Architect

LICENSED PROFESSIONAL ENGINEER
S. J. BOYD
PROVINCE OF ONTARIO
OCT 4,2017

no.	description	date	by
1	ISSUED FOR CLIENT REVIEW	JUL 04-16	RC
2	REVISED INSULATION AT STAIRS	SEPT 19/16	SB
3	REVISED TO 10" FOUNDATION WALLS	DEC 12-16	AE
4	REVISED AS PER ENG'S COMMENTS	OCT 04-17	RC
5			
6			
7			
8			
9			

The undersigned has reviewed and takes responsibility for this design, and has the qualifications and meets the requirements set out in the Ontario Building Code to be a Designer.
qualification information
Wellington Jno-Baptiste 25591
registration information
VA3 Design Inc. 42658

Contractor must verify all dimensions on the job and report any discrepancy to the Designer before proceeding with the work. All drawings and specifications are instruments of service and the property of the Designer which must be returned at the completion of the work. Drawings are not to be scaled.

VA3 DESIGN
255 Consumers Rd Suite 120
Toronto ON M2J 1R4
t 416.630.2255 f 416.630.4782
va3design.com

BAYVIEW WELLINGTON
project name ALCONA
municipality INNISFIL, ONTARIO
S30-1
REAR ELEVATION 'A' & 'B' UPGRADE 9R WOD CONDITION
date NOV. 2015
drawn by RC
checked by
scale 3/16" = 1'-0"
project no. 13049
file name 13049-S30-1
drawing no. 21
RICHARD - H:\ARCHIVE\WORKING\2013\13049.BW\UNITS\30\13049-S30-1.dwg - Wed - Oct 4 2017 - 11:49 AM

All drawings specifications, related documents and design are the copyright property of VA3 DESIGN. Reproduction of this property in whole or in part is strictly prohibited without VA3 DESIGN's written permission.

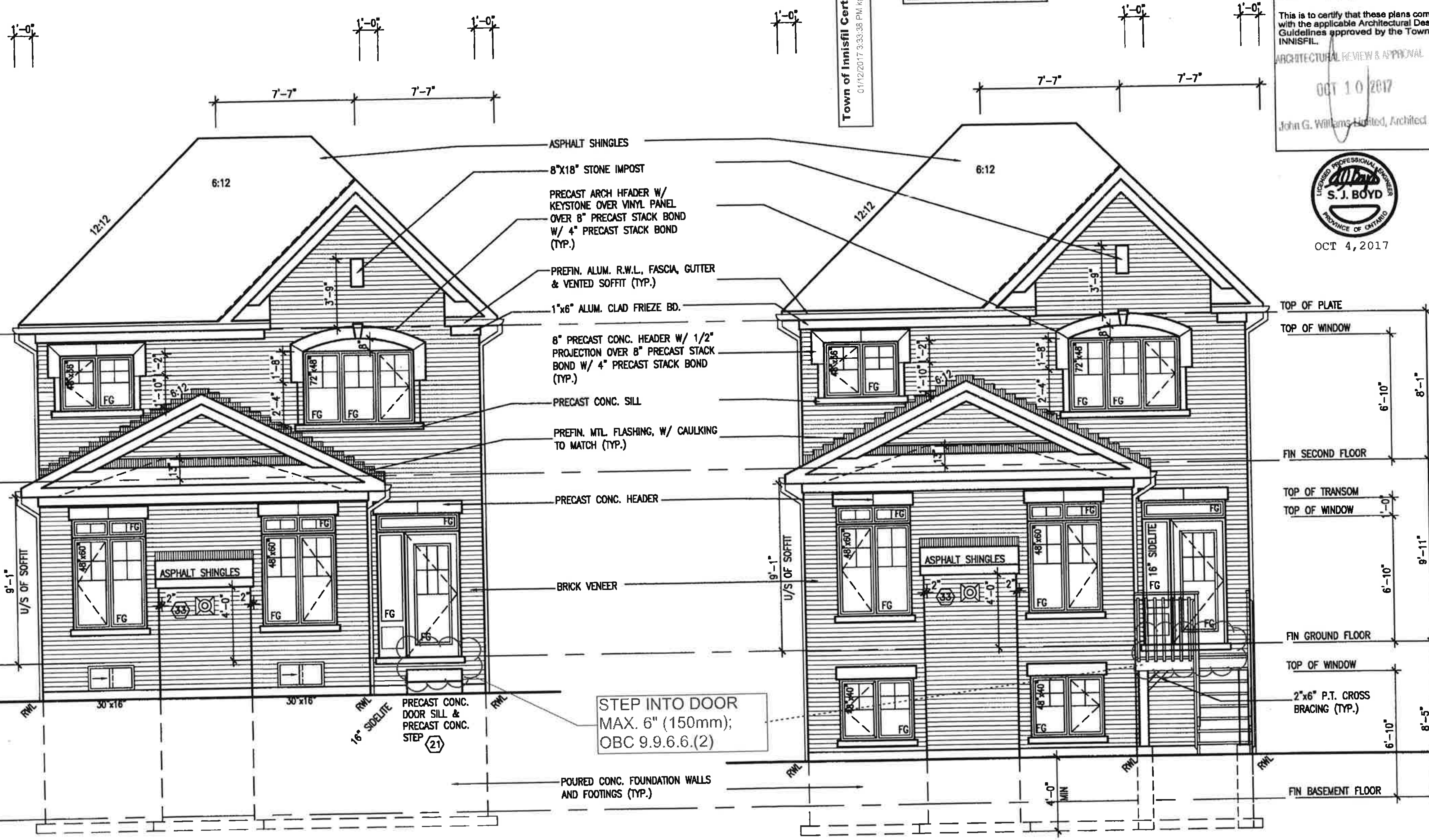

BASEMENT WINDOW SIZES
4R-8R USE 30"x24" VINYL CLAD STRUCTURAL STEEL FRAME BASEMENT WINDOWS

Town of Innisfil Certified Model
01/12/2017 3:33:38 PM kgervais

REAR ELEVATION 'C' UPGRADE

REAR ELEVATION 'C' UPGRADE WOD CONDITION

REFER TO FRONT ELEVATION FOR TYPICAL NOTES & INFORMATION

It is the builder's complete responsibility to ensure that all plans submitted for approval fully comply with the Architectural Guidelines and all applicable regulations and requirements including zoning provisions and any provisions in the subdivision agreement. The Control Architect is not responsible in any way for examining or approving site (lotting) plans or working drawings with respect to any zoning or building code or permit matter or that any house can be properly built or located on its lot.

This is to certify that these plans comply with the applicable Architectural Design Guidelines approved by the Town of INNISFIL.

ARCHITECTURAL REVIEW & APPROVAL
OCT 10 2017
John G. Williams Limited, Architect

LICENSED PROFESSIONAL ENGINEER S. J. BOYD PROVINCE OF ONTARIO
OCT 4,2017

BAYVIEW WELLINGTON

S30-1

project no. 13049
drawing no. 22
municipality INNISFIL, ONTARIO
project name ALCONA
REAR ELEVATION 'C' UPGRADE
date NOV. 2015
drawn by RC
checked by
scale 3/16" = 1'-0"
file name 13049-S30-1

VA3 DESIGN
255 Consumers Rd Suite 120 Toronto ON M2J 1R4
t 416.630.2255 f 416.630.4782
va3design.com

The undersigned has reviewed and takes responsibility for this design and has the qualifications and meets the requirements set out in the Ontario Building Code to be a Designer.
qualification information: Wellington Jno-Baptiste 25591
registration information: VA3 Design Inc. 42658

Contractor must verify all dimensions on the job and report any discrepancy to the Designer before proceeding with the work. All drawings and specifications are instruments of service and the property of the Designer which must be returned at the completion of the work. Drawings are not to be scaled.

no.	description	date	by
9			
8			
7			
6			
5			
4	REVISED AS PER ENG'S COMMENTS	OCT 04-17	RC
3	REVISED TO 10" FOUNDATION WALLS	DEC 12-16	AE
2	REVISED INSULATION AT STAIRS	SEPT 19/16	SB
1	ISSUED FOR CLIENT REVIEW	JUL 04-16	RC

All drawings specifications, related documents and design are the copyright property of VA3 DESIGN. Reproduction of this property in whole or in part is strictly prohibited without VA3 DESIGN's written permission.

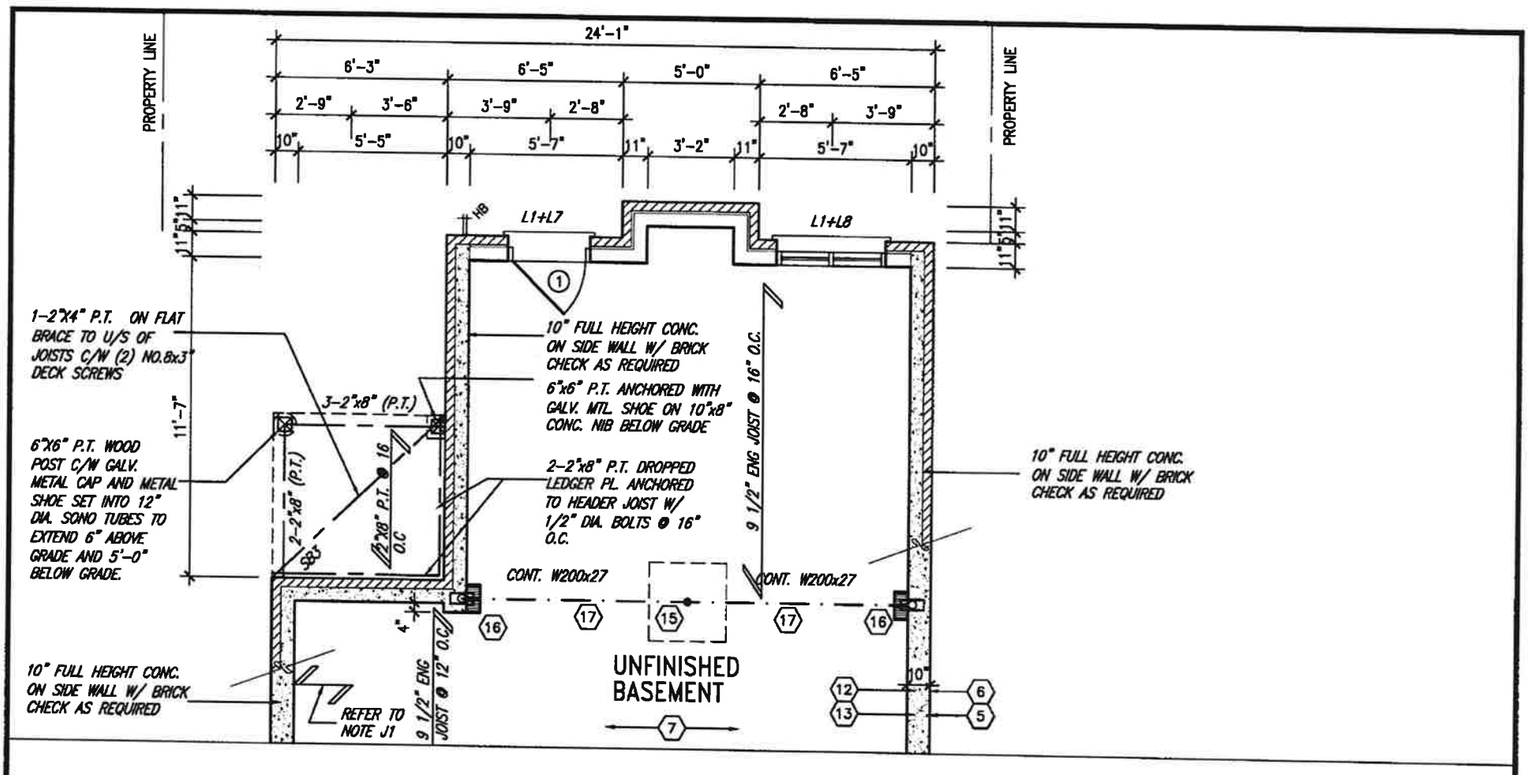

PARTIAL BASEMENT FLOOR PLAN WALK OUT BASEMENT CONDITION

LICENSED PROFESSIONAL ENGINEER
S. J. BOYD
PROVINCE OF ONTARIO

OCT 4, 2017

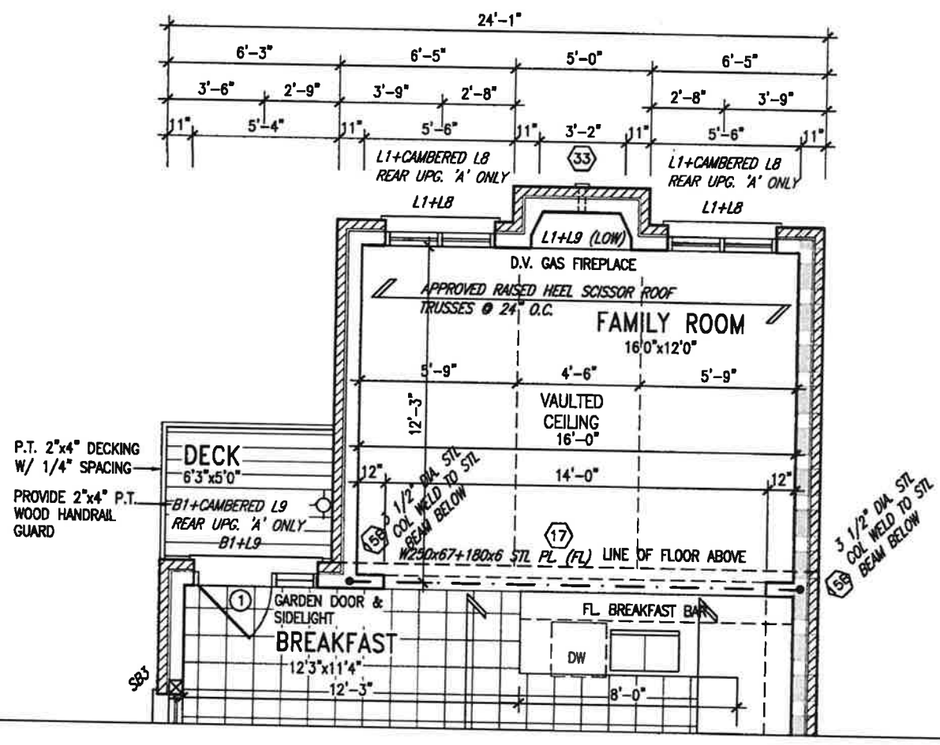

Town of Innisfil Certified Model
01/12/2017 3:33:45 PM kgervais

PARTIAL GROUND FLOOR PLAN WALK OUT BASEMENT CONDITION

UNINSULATED OPENINGS (PER OBC. SB-12,3.1.1(7))			
30-1 ELEVATION A WOB	ENERGY EFFICIENCY – OBC SB12		
ELEVATION	WALL AREA S.F.	OPENING S.F.	PERCENTAGE
FRONT	482 S.F.	107.722 S.F.	22.35 %
LEFT SIDE	1002 S.F.	90.667 S.F.	9.05 %
RIGHT SIDE	1002 S.F.	0 S.F.	0.00 %
REAR	648 S.F.	179.75 S.F.	27.74 %
* OPENINGS OMITTED AS PER SB-12 3.1.1.9(4) MAX 19.9 S.F. REFER TO ELEVATION FOR LOCATION		0 S.F.	
TOTAL SQ. FT.	3134.00 S.F.	378.14 S.F.	12.07 %
TOTAL SQ. M.	291.16 S.M.	35.13 S.M.	12.07 %

UNINSULATED OPENINGS (PER OBC. SB-12,3.1.1(7))			
30-1 ELEVATION B WOB	ENERGY EFFICIENCY – OBC SB12		
ELEVATION	WALL AREA S.F.	OPENING S.F.	PERCENTAGE
FRONT	482 S.F.	121.722 S.F.	25.25 %
LEFT SIDE	1012 S.F.	90.667 S.F.	8.96 %
RIGHT SIDE	1012 S.F.	0 S.F.	0.00 %
REAR	648 S.F.	179.75 S.F.	27.74 %
* OPENINGS OMITTED AS PER SB-12 3.1.1.9(4) MAX 19.9 S.F. REFER TO ELEVATION FOR LOCATION		0 S.F.	
TOTAL SQ. FT.	3154.00 S.F.	392.14 S.F.	12.43 %
TOTAL SQ. M.	293.01 S.M.	36.43 S.M.	12.43 %

It is the builder's complete responsibility to ensure that all plans submitted for approval fully comply with the Architectural Guidelines and all applicable regulations and requirements including zoning provisions and any provisions in the subdivision agreement. The Control Architect is not responsible in any way for examining or approving site (lotting) plans or working drawings with respect to any zoning or building code or permit matter or that any house can be properly built or located on its lot.

This is to certify that these plans comply with the applicable Architectural Design Guidelines approved by the Town of INNISFIL.

ARCHITECTURAL REVIEW APPROVAL
OCT 10 2017
John G. Williams Limited, Architect

no.	description	date	by
9	.	.	.
8	.	.	.
7	.	.	.
6	.	.	.
5	.	.	.
4	REVISED AS PER ENG'S COMMENTS	OCT 04-17	RC
3	REVISED TO 10" FOUNDATION WALLS	DEC 12-16	AJE
2	REVISED INSULATION AT STAIRS	SEPT 19/16	SB
1	ISSUED FOR CLIENT REVIEW	JUL 04-16	RC

The undersigned has reviewed and takes responsibility for this design and has the qualifications and meets the requirements set out in the Ontario Building Code to be a Designer.

qualification information
name: Wellington Jno-Baptiste — signature — registration information: 25591
VA3 Design Inc. — BCIN: 42658

Contractor must verify all dimensions on the job and report any discrepancy to the Designer before proceeding with the work. All drawings and specifications are instruments of service and the property of the Designer which must be returned at the completion of the work. Drawings are not to be scaled.

VA3 DESIGN
255 Consumers Rd Suite 120
Toronto ON M2J 1R4
t 416.630.2255 f 416.630.4782
va3design.com

BAYVIEW WELLINGTON — **S30-1**

project name: ALCONA — municipality: INNISFIL, ONTARIO — project no. 13049

date: NOV. 2015 — PARTIAL FLOOR PLAN WOB

drawn by: RC — checked by: — scale: 3/16" = 1'-0" — file name: 13049-S30-1 — drawing no. 23

RICHARD – H:\ARCHIVE\WORKING\2013\13049.BW\UNITS\30^\13049-S30-1.dwg – Wed – Oct 4 2017 – 11:49 AM

All drawings specifications, related documents and design are the copyright property of VA3 DESIGN. Reproduction of this property in whole or in part is strictly prohibited without VA3 DESIGN's written permission.

It is the builder's complete responsibility to ensure that all plans submitted for approval fully comply with the Architectural Guidelines and all applicable regulations and requirements including zoning provisions and any provisions in the subdivision agreement. The Control Architect is not responsible in any way for examining or approving site (lotting) plans or working drawings with respect to any zoning or building code or permit matter or that any house can be properly built or located on its lot.

This is to certify that these plans comply with the applicable Architectural Design Guidelines approved by the Town of INNISFIL.

ARCHITECTURAL REVIEW & APPROVAL
OCT 10 2017
John G. Williams Limited, Architect

Town of Innisfil Certified Model
01/12/2017 3:33:59 PM kgervais

LICENSED PROFESSIONAL ENGINEER
S. J. BOYD
PROVINCE OF ONTARIO
OCT 4,2017

REAR ELEVATION 'A/B/C'
WALK OUT BASEMENT COND

REFER TO FRONT ELEVATION FOR TYPICAL NOTES & INFORMATION

no.	description	date	by
9	.	.	.
8	.	.	.
7	.	.	.
6	.	.	.
5	.	.	.
4	REVISED AS PER ENG'S COMMENTS	OCT 04-17	RC
3	REVISED TO 10" FOUNDATION WALLS	DEC 12-16	AJE
2	REVISED INSULATION AT STAIRS	SEPT 19/16	SB
1	ISSUED FOR CLIENT REVIEW	JUL 04-16	RC

The undersigned has reviewed and takes responsibility for this design and has the qualifications and meets the requirements set out in the Ontario Building Code to be a Designer.
qualification information
Wellington Jno-Baptiste — signature — 25591
name
registration information
VA3 Design Inc. — BCIN 42658

Contractor must verify all dimensions on the job and report any discrepancy to the Designer before proceeding with the work. All drawings and specifications are instruments of service and the property of the Designer which must be returned at the completion of the work. Drawings are not to be scaled.

VA3 DESIGN
255 Consumers Rd Suite 120
Toronto ON M2J 1R4
t 416.630.2255 f 416.630.4782
va3design.com

BAYVIEW WELLINGTON — S30-1

project name: ALCONA
municipality: INNISFIL, ONTARIO
REAR ELEVATION WOB
date: NOV. 2015
drawn by: RC
checked by: .
scale: 3/16" = 1'-0"
file name: 13049-S30-1
drawing no.: 24

RICHARD – H:\ARCHIVE\WORKING\2013\13049.BW\UNITS\30'\13049-S30-1.dwg – Wed – Oct 4 2017 – 11:49 AM

All drawings specifications, related documents and design are the copyright property of VA3 DESIGN. Reproduction of this property in whole or in part is strictly prohibited without VA3 DESIGN's written permission.

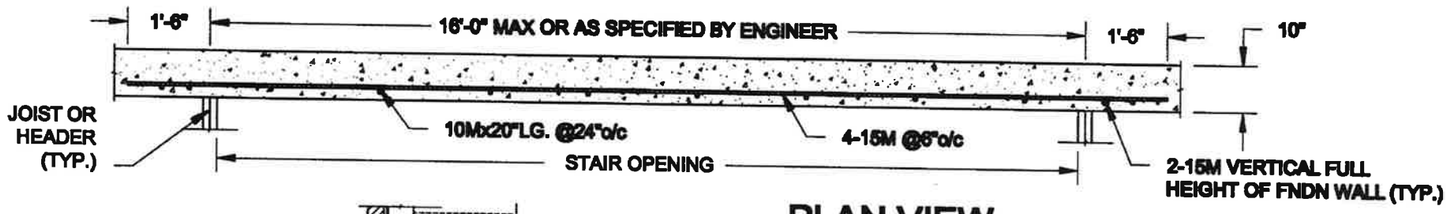

PLAN VIEW

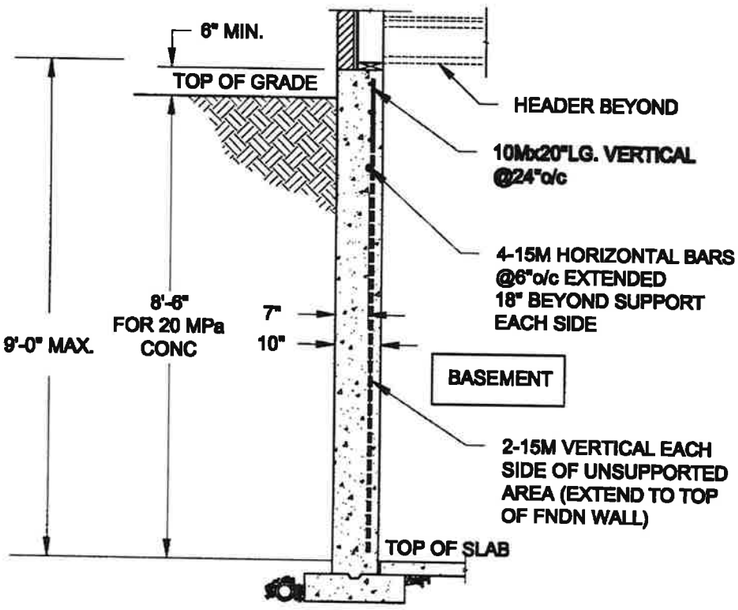

NOTE:

1. CONFORM TO ONTARIO BUILDING CODE, 2012.
2. CONCRETE COMPRESSIVE STRENGTH AT 28 DAYS TO BE 20 MPa. MIN.
3. REINFORCING STEEL TO BE GRADE 400.

1 / S1 LATERALLY UNSUPPORTED WALL

SCALE: 3/8" = 1'-0"

Town of Innisfil Certified Model
01/12/2017 3:34:05 PM kgervais

FOR 9 1/2" JOIST DEPTH

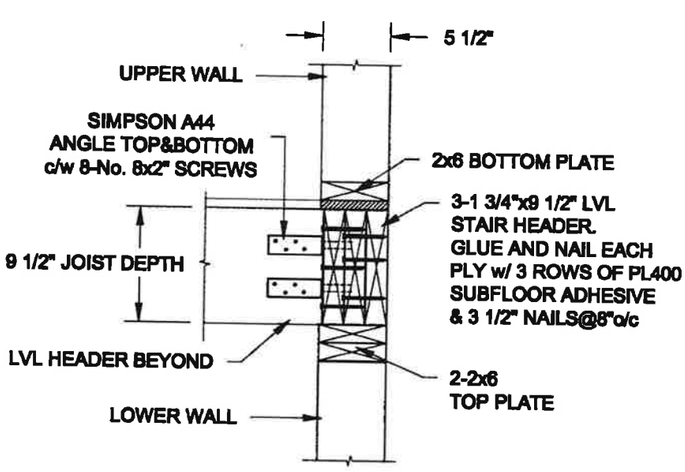

FOR 11 7/8" JOIST DEPTH

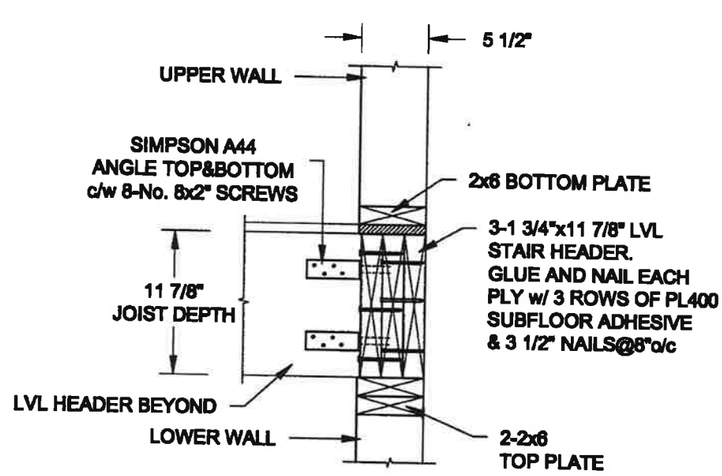

2 / S1 STAIR HEADER @ EXTERIOR WALL

SCALE: 1" = 1'-0"

LICENSED PROFESSIONAL ENGINEER
A. T. Quaile
17-08-01
PROVINCE OF ONTARIO

Scale: AS NOTED	QUAILE ENGINEERING LTD. 38 Parkside Drive, UNIT 7 Newmarket, ON L3Y 8J9 T: 905-853-8547 E: quaile.eng@rogers.com	Engineer's Seal:	Project: BAYVIEW WELLINGTON HOMES - ALCONA PROJECT INNISFIL, ONTARIO
Date: JUL-31-2017			TYPICAL STRUCTURAL DETAILS FOR SINGLES
Drawn: SC / Checked: SJB			Project No.: 16-083 / Drawing No.: S1

F:\BarnC-08\2016\16-083 BAYVIEW WELLINGTON ALCONA SINGLES\16-083.dwg

FOR 9 1/2" JOIST DEPTH

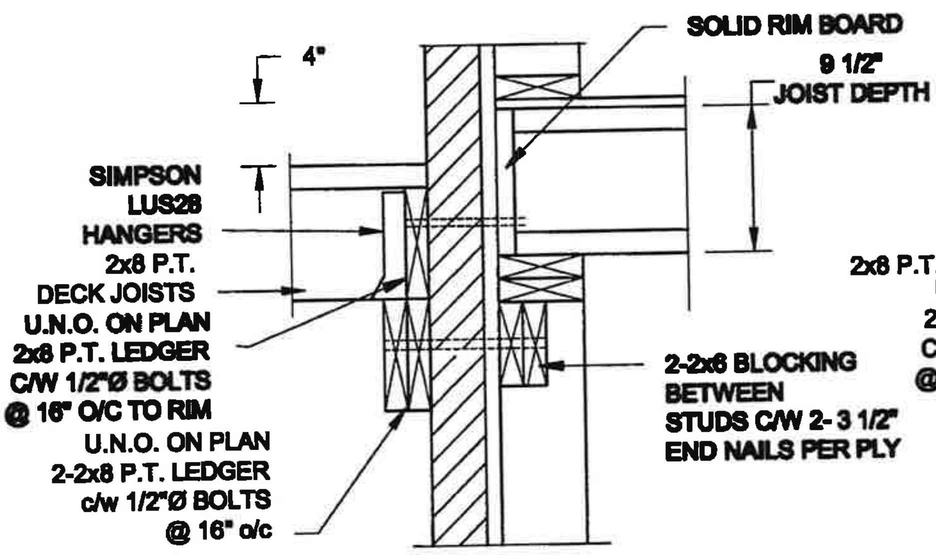

1A/S2 DECK FASTENING DETAIL

SCALE: 1" = 1'-0"

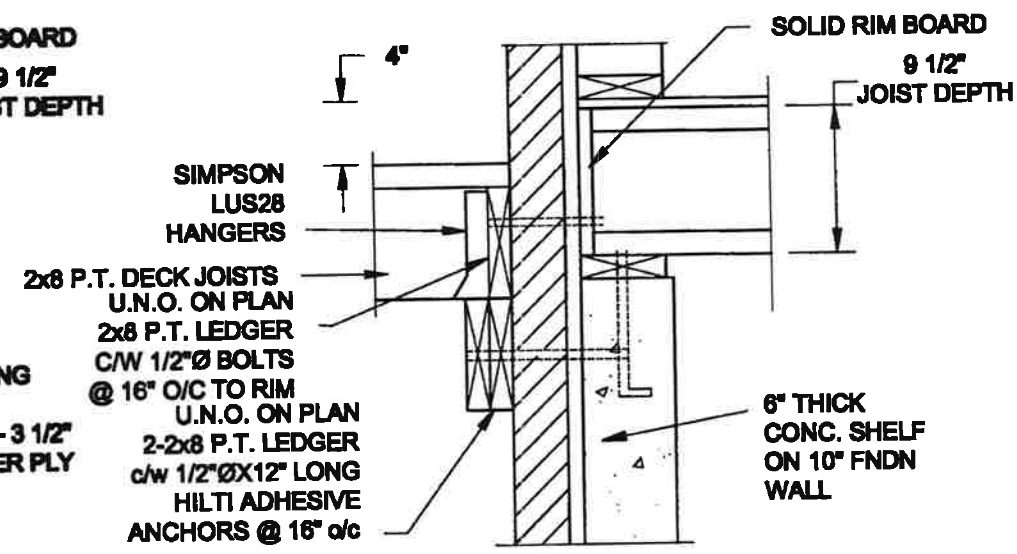

1B/S2 DECK FASTENING DETAIL

SCALE: 1" = 1'-0"

NOTE:
1. WHERE BACKFILL HEIGHT < 4'-7", PROVIDE 2x6 @ 16" o/c KNEEWALL ON 10" THICK CONC FNDN WALL
2. WHERE BACKFILL HEIGHT > 4'-7", PROVIDE 6" CONC SHELF FOR BRICK VENEER ON 10" THICK CONC FNDN WALL
3. FOOTING TO BE 22"x6" THICK UNLESS NOTED OTHERWISE ON PLAN.

FOR 11 7/8" JOIST DEPTH

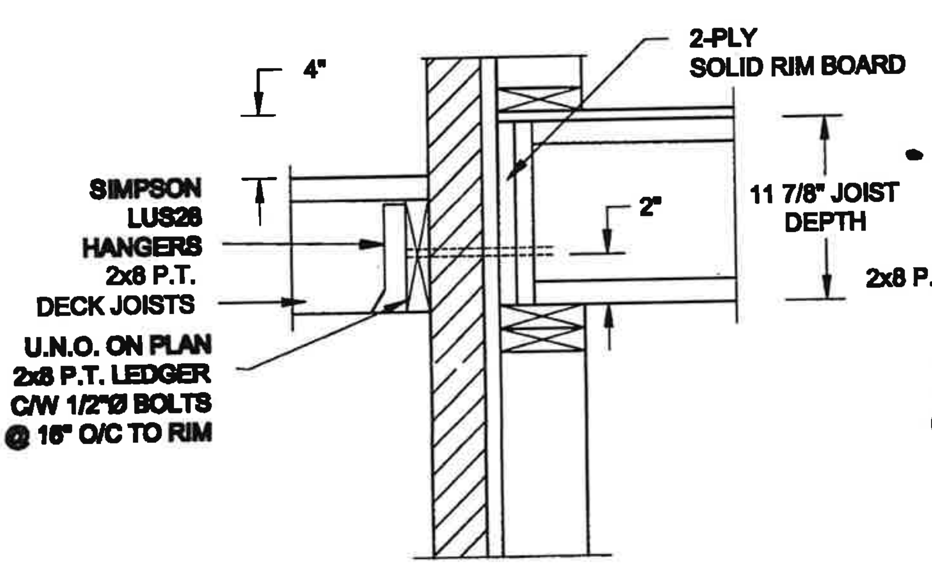

2A/S2 DECK FASTENING DETAIL

SCALE: 1" = 1'-0"

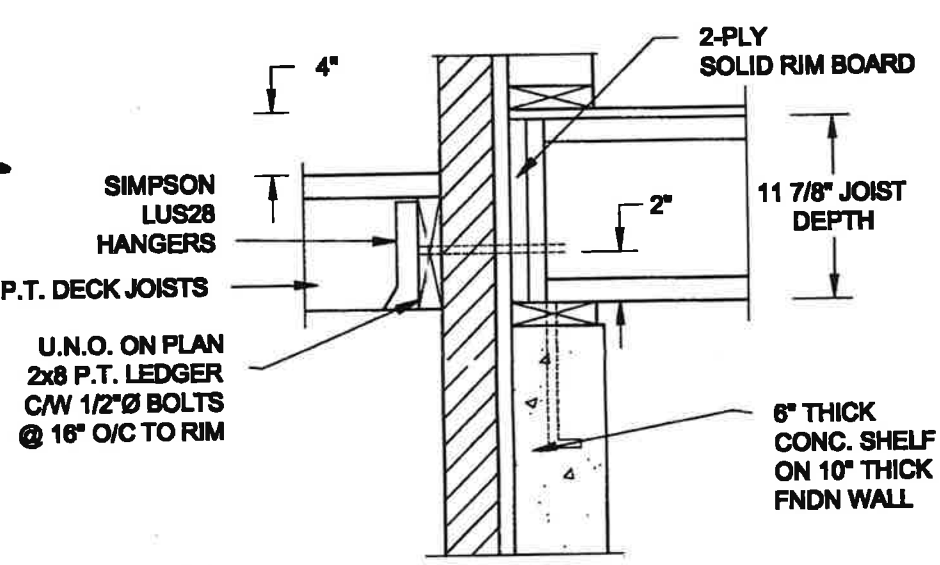

2B/S2 DECK FASTENING DETAIL

SCALE: 1" = 1'-0"

NOTE:
1. WHERE BACKFILL HEIGHT < 4'-7", PROVIDE 2x6 @ 16" o/c KNEEWALL ON 10" THICK CONC FNDN WALL
2. WHERE BACKFILL HEIGHT > 4'-7", PROVIDE 6" CONC SHELF FOR BRICK VENEER ON 10" THICK CONC FNDN WALL
3. FOOTING TO BE 22"x6" THICK UNLESS NOTED OTHERWISE ON PLAN.

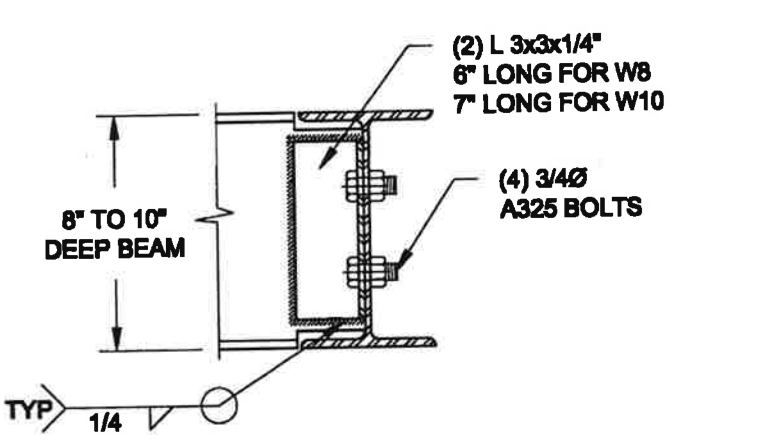

NOTE: DETAIL IS APPLICABLE TO W8x40 (W200x59) BEAM MAX AND W10x39 (W250x58) BEAM MAX.

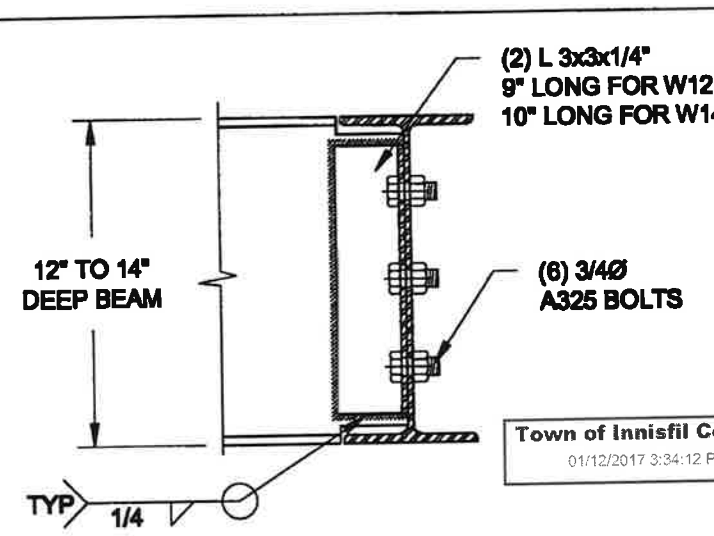

Town of Innisfil Certified Model
01/12/2017 3:34:12 PM kgervais

NOTE: DETAIL IS APPLICABLE TO W12x58 (W310x86) BEAM MAX AND W14x48 (W360x72) BEAM MAX.

3/S2 STEEL BEAM CONNECTION DETAIL

SCALE: 1-1/2" = 1'-0"

LICENSED PROFESSIONAL ENGINEER
A. T. Quaile
17-08-01
PROVINCE OF ONTARIO

Scale: AS NOTED	QUAILE ENGINEERING LTD.	Engineer's Seal:	Project: BAYVIEW WELLINGTON HOMES - ALCONA PROJECT INNISFIL, ONTARIO
Date: JUL-31-2017	38 Parkside Drive, UNIT 7 Newmarket, ON L3Y 8J9 T: 905-853-8547 E: quaile.eng@rogers.com		TYPICAL STRUCTURAL DETAILS FOR SINGLES
Drawn: SC / Checked: SJB			Project No.: 16-083 / Drawing No.: S2

P:\Quaile\2016\16-083 BAYVIEW WELLINGTON ALCONA SINGLES\16-083.dwg

CONSTRUCTION NOTES (Unless otherwise noted)

ALL CONSTRUCTION TO ADHERE TO THESE PLANS AND SPEC'S AND TO CONFORM TO THE ONTARIO BUILDING CODE AND ALL OTHER APPLICABLE CODES AND AUTHORITIES HAVING JURISDICTION. THESE REQUIREMENTS ARE TO BE TAKEN AS MINIMUM SPECIFICATIONS. ONT. REG. 332/12-2012 OBC

1. **ROOF CONSTRUCTION**
NO.210 (10.25kg/m2) ASPHALT SHINGLES, 10mm (3/8") PLYWOOD SHEATHING WITH "H" CLIPS, APPROVED WOOD TRUSSES @ 600mm (24") O.C. MAX. APPROVED EAVES PROTECTION TO EXTEND 900mm (3'-0") FROM EDGE OF ROOF AND MIN. 300mm (12") BEYOND INNER FACE OF EXTERIOR WALL. (EAVES PROTECTION NOT REQ'D FOR ROOF SLOPES 8:12 OR GREATER) 38x89 (2"x4") TRUSS BRACING @ 1830mm (6'-0") O.C. AT BOTTOM CHORD. PREFIN. ALUM. EAVESTROUGH, FASCIA, RWL & VENTED SOFFIT, PROVIDE ICE & WATER SHIELD TO ALL ROOF/WALL SURFACES SUSCEPTIBLE TO ICE DAMMING. ROOF SHEATHING TO BE FASTENED 150 (6") c/c ALONG EDGES & INTERMEDIATE SUPPORTS WHEN TRUSSES SPACED GREATER THAN 406 (16"). ATTIC VENTILATION 1:300 OF INSULATED CEILING AREA WITH MIN. 25% AT EAVES & MIN. 25% AT RIDGE (OBC 9.19.1.2.).

2. **FRAME WALL CONSTRUCTION (2"x6") (SB-12-TABLE 3.1.1.2.A)**
SIDING AS PER ELEV., 19x38 (1"x2") VERTICAL WOOD FURRING, CONTIN. SHEATHING MEMBRANE, 9.5mm (3/8") EXT. TYPE SHEATHING, 38x140 (2"x6") STUDS @ 400mm (16") O.C., RSI 3.87 (R22) INSULATION AND APPR. VAPOUR BARRIER AND APPR. CONTIN. AIR BARRIER, 13mm (1/2") INT. DRYWALL FINISH. SIDING TO BE MIN. 200mm (8") ABOVE FINISH GRADE. REFER TO OBC SB-12, CHAPTER 3 FOR ADDITIONAL THERMAL INSULATION REQUIREMENTS.

2A. RESERVED

2B. **FRAME WALL CONSTRUCTION (2"x4") – GARAGE WALLS**
SIDING AS PER ELEV., 19x38 (1"x2") VERTICAL WOOD FURRING, CONTIN. SHEATHING MEMBRANE, 9.5mm (3/8") EXT. TYPE SHEATHING, 38x89 (2"x4") STUDS @ 400mm (16") O.C. (MAX. HEIGHT 3000mm (9'-10"). WITH APPR. DIAGONAL WALL BRACING. SIDING TO BE MIN. 200mm (8") ABOVE FINISH GRADE.

2C. RESERVED

2D. **STUCCO WALL CONSTRUCTION (2"x4") –GARAGE WALLS**
STUCCO CLADDING SYSTEM CONFORMING TO O.B.C. 9.27.1.1.(2) & 9.28 THAT EMPLOY A MINIMUM 10mm AIR SPACE BEHIND THE CLADDING WITH POSITIVE DRAINAGE TO THE EXTERIOR AND APPLIED PER MANUFACTURERS SPECIFICATIONS OVER 25mm (1") MIN. EXPANDED OR EXTRUDED RIGID POLYSTYRENE ON APPROVED AIR/MOISTURE BARRIER ON 13mm (1/2") EXT. TYPE SHEATHING ON 38x89 (2"x4") STUDS @ 400 (16") O.C., STUCCO TO BE MIN. 200 (8") ABOVE FINISH GRADE.

2E. **WALLS ADJACENT TO ATTIC SPACE – NO CLADDING**
9.5mm (3/8") EXT. TYPE SHEATHING, 38x140 (2"x6") STUDS @ 400mm (16") O.C., RSI 3.87 (R22) INSULATION AND APPR. VAPOUR BARRIER AND APPR. CONTIN. AIR BARRIER, 13mm (1/2") INTERIOR DRYWALL FINISH. MID-HEIGHT BLOCKING REQ'D. IF NO SHEATHING APPLIED. REFER TO OBC SB-12, CHAPTER 3 FOR ADDITIONAL THERMAL INSULATION REQUIREMENTS.

3. **BRICK VENEER CONSTRUCTION (2"x6") (SB-12-TABLE 3.1.1.2.A)**
90mm (4") FACE BRICK, 25mm (1") AIR SPACE, 22x180x0.76mm (7/8"x7"x0.03") GALV. METAL TIES @ 400mm (16") O.C. HORIZONTAL 600mm (24") O.C. VERTICAL. APPROVED SHEATHING PAPER, 9.5mm (3/8") EXT. TYPE SHEATHING, 38x140 (2"x6") STUDS @ 400mm (16") O.C., RSI 3.87 (R22) INSULATION & APPR. VAPOUR BARRIER WITH APPR. CONTIN. AIR BARRIER, 13mm (1/2") INTERIOR DRYWALL FINISH. PROVIDE WEEP HOLES @ 800mm (32") O.C. BOTTOM COURSE AND OVER OPENINGS. PROVIDE BASE FLASHING UP MIN. 150mm (6") BEHIND BUILDING PAPER. REFER TO OBC SB-12, CHAPTER 3 FOR ADDITIONAL THERMAL INSULATION REQUIREMENTS. BRICK TO BE MIN. 150mm (6") ABOVE FINISH GRADE.

3A. RESERVED

3B. **BRICK VENEER CONSTRUCTION (2"x4") – GARAGE WALLS**
90mm (4") FACE BRICK, 25mm (1") AIR SPACE, 22x180x0.76mm (7/8"x7"x0.03") GALV. METAL TIES @ 400mm (16") O.C. HORIZONTAL 600mm (24") O.C. VERTICAL. APPR. SHEATHING PAPER, 9.5mm (3/8") EXT. TYPE SHEATHING, 38x89 (2"x4") STUDS @ 400mm (16") O.C. (MAX. HEIGHT 3000mm 9'-10") WITH APPR. DIAGONAL WALL BRACING. PROVIDE WEEP HOLES @ 800mm (32") O.C. BOTTOM COURSE AND OVER OPENINGS. PROVIDE BASE FLASHING UP MIN. 150mm (6") BEHIND BUILDING PAPER. BRICK TO BE MIN. 150mm (6") ABOVE FINISH GRADE.

3C. **STUCCO WALL CONSTRUCTION (2"x6") (SB-12-TABLE 3.1.1.2.A)**
STUCCO CLADDING SYSTEM CONFORMING TO O.B.C. 9.27.1.1.(2) & 9.28 THAT EMPLOYS A MINIMUM 10mm AIR SPACE BEHIND THE CLADDING WITH POSITIVE DRAINAGE TO THE EXTERIOR AND APPLIED PER MANUFACTURERS SPECIFICATIONS OVER 25mm (1") MIN. EXTRUDED OR EXPANDED RIGID POLYSTYRENE ON APPR. CONTIN. AIR/MOISTURE BARRIER ON 13mm (1/2") EXT. TYPE SHEATHING ON 38x140 (2"x6") STUDS @ 400mm (16") O.C., RSI 3.87(R22) INSULATION. APPROVED VAPOUR BARRIER, 13mm (1/2") GYPSUM WALLBOARD INTERIOR FINISH. REFER TO OBC SB-12, CHAPTER 3 FOR ADDITIONAL THERMAL INSULATION REQUIREMENTS. STUCCO TO BE MIN. 200 (8") ABOVE FINISH GRADE.

4. **INTERIOR STUD PARTITIONS**
FOR BEARING PARTITIONS 38x89 (2"x4") @ 400mm (16") O.C. FOR 2 STOREYS AND 300mm (12") O.C. FOR 3 STOREYS. NON-BEARING PARTITIONS 38x89 (2"x4") @ 600mm (24") O.C. PROVIDE 38x89 (2"x4") BOTTOM PLATE AND 2/38x89 (2/2"x4") TOP PLATE. 13mm (1/2") INT. DRYWALL BOTH SIDES OF STUDS. PROVIDE 38x140 (2"x6") STUDS/PLATES WHERE NOTED.

5. **FOUNDATION WALL/FOOTINGS: (9.15.3, 9.15.4, 9.13.2, 9.14.2.1.(2))**
250mm (10") POURED CONC. FDTN. WALL 20MPa (2900psi) WITH BITUMENOUS DAMPPROOFING AND DRAINAGE LAYER. DRAINAGE LAYER REQ'D. WHEN BASEMENT INSUL. EXTENDS 900 (2'-11") BELOW FIN. GRADE. DRAINAGE LAYER IS NOT REQ'D. WHEN FDTN. WALL IS WATERPROOFED. MAXIMUM POUR HEIGHT 2820 (9'-3") ON 560x155 (22"x6") CONTINUOUS KEYED CONC. FTG. BRACE FDTN. WALL PRIOR TO BACKFILLING. ALL FOOTINGS SHALL REST ON NATURAL UNDISTURBED SOIL OR COMPACTED ENGINEERED FILL, WITH MIN. BEARING CAPACITY OF 150kPa OR GREATER. IF SOIL BEARING DOES NOT MEET MINIMUM CAPACITY, ENGINEERED FOOTINGS ARE REQUIRED.

STOREYS SUPPORTED	W/ MASONRY VENEER	W/ SIDING ONLY
1	18" WIDE x 6" DEEP	18" WIDE x 6" DEEP
2	22" WIDE x 6" DEEP	22" WIDE x 6" DEEP
3	28" WIDE x 9" DEEP	22" WIDE x 6" DEEP

-SEE OBC 9.15.3.
-MAXIMUM FLOOR LIVE LOAD OF 2.4kPa. (50psf.) PER FLOOR, AND MAX. LENGTH OF SUPPORTED FLOOR JOISTS IS 4.9m (16'-1").
-REFER TO SOILS REPORT FOR SOIL CONDITIONS AND BEARING CAPACITY.

STRIP FOOTING SUPPORTING EXTERIOR WALLS (FOR W.O.B.)
-ASSUMING MASONRY VENEER CONSTRUCTION, MAX. FLOOR LIVE LOAD OF 2.4kPa. (50psf.) PER FLOOR, AND MAX. LENGTH OF SUPPORTED FLOOR JOISTS IS 4.9m (16'-1"). THE STRIP FOOTING SIZE IS AS FOLLOWS:
2 STOREY WITH WALK-OUT BASEMENT 545x175 (22"x7")

6. **FOUNDATION DRAINAGE OBC. 9.14.2. & 9.14.3.**
100mm (4") DIA. FOUNDATION DRAINAGE TILE 150mm (6") CRUSHED STONE OVER AND AROUND DRAINAGE TILES.

7. **BASEMENT SLAB OBC. 9.3.1.6.(1)(b), 9.16.4.5.(1), 9.25.3.3.(15)**
80mm (3")MIN. 25MPa (3600psi) CONC. SLAB ON 100mm (4") COARSE GRANULAR FILL, OR 20MPa. (3000psi) CONC. WITH DAMPPROOFING BELOW SLAB. UNDER SLAB INSULATION PER SB-12. ALL SLAB JOINTS & PENETRATIONS TO BE CAULKED.

8. **EXPOSED FLOOR TO EXTERIOR (SB-12-TABLE 3.1.1.2.A)**
PROVIDE RSI 5.46 (R31) INSULATION, APPROVED VAPOUR BARRIER AND CONTINUOUS AIR BARRIER, FINISHED SOFFIT.

9. ◆ **ATTIC INSULATION (SB-12-TABLE 3.1.1.2.A) (SB-12-3.1.1.8)**
RSI 10.56 (R60) BLOWN IN ROOF INSULATION AND APPROVED VAPOUR BARRIER, 13mm (1/2") GYPSUM CEILING BOARD OR APPROVED EQUAL. RSI 3.52 (R20) MIN. ABOVE INNER SURFACE OF EXTERIOR WALL

10. **ALL STAIRS/EXTERIOR STAIRS –OBC. 9.8.–**

UNIFORM RISE	-5mm (1/4") MAX BETWEEN ADJACENT TREADS OR LANDINGS -10mm (1/2") MAX BETWEEN TALLEST & SHORTEST RISE IN FLIGHT
MAX. RISE	= 200 (7-7/8")
MIN. RUN	= 210 (8-1/4")
MIN. TREAD	= 235 (9-1/4")
MAX. NOSING	= 25 (1")
MIN. HEADROOM	= 1950 (6'-5")
RAIL @ LANDING	= 900 (2'-11")
RAIL @ STAIR	= 865 (2'-10") to 965 (3'-2")
MIN. STAIR WIDTH	= 860 (2'-10")
FOR CURVED STAIRS	
MIN. RUN	= 150 (6")
MIN. AVG. RUN	= 200 (8")

11. **HANDRAILS –OBC. 9.8.7.–**
FINISHED RAILING ON PICKETS SPACED MAXIMUM 100mm (4") BETWEEN PICKETS. CLEARANCE BETWEEN HANDRAIL AND SURFACE BEHIND IT TO BE 50 (2") MIN. HANDRAILS TO BE CONTINUOUS EXCEPT FOR NEWEL POST AT CHANGES OF DIRECTION.
INTERIOR GUARDS –OBC. 9.8.8.–
INTERIOR GUARDS: 900mm (2'-11") MIN. HIGH
EXTERIOR GUARDS – OBC. 9.8.8.
900mm (36") HIGH GUARD WHERE DISTANCE FROM PORCH TO FIN. GRADE IS LESS THAN 1800mm (71"). 1070mm (42") HIGH GUARD IS REQUIRED WHERE DISTANCE EXCEEDS 1800mm (71").

12. **SILL PLATE – OBC. 9.23.7.**
38x89 (2"x4") SILL PLATE WITH 13mm (1/2") DIA. ANCHOR BOLTS 200mm (8") LONG, EMBEDDED MIN. 100mm (4") INTO CONC. @ 2400mm (7'-10") O.C., CAULKING OR 25 (1") MIN. MINERAL WOOL BETWEEN PLATE AND TOP OF FDTN. WALL. USE NON-SHRINK GROUT TO LEVEL SILL PLATE WHEN REQUIRED.

13. **BASEMENT INSULATION (SB-12-3.1.1.7), 9.25.2.3, 9.13.2.6)**
FOUNDATION WALLS ENCLOSING HEATED SPACE SHALL BE INSULATED FROM THE UNDERSIDE OF THE SUBFLOOR TO NOT MORE THAN 200mm (8") ABOVE THE FINISHED FLOOR & NO CLOSER THAN 50mm (2") OF THE BASEMENT SLAB. RSI3.52ci (R20ci) BLANKET INSULATION TO HAVE APPROVED VAPOUR BARRIER. RECOMMEND DAMPPROOF WITH BUILDING PAPER BETWEEN THE FOUNDATION WALL AND INSULATION UP TO GRADE LEVEL. NOTE: FULL HEIGHT INSULATION AT COLD CELLAR WALLS. AIR BARRIER TO BE SEALED TO FOUNDATION WALL WITH CAULKING. CONTINUOUS INSULATION (ci) IS NOT TO BE INTERRUPTED BY FRAMING.

14. **BEARING STUD PARTITION**
38x89 (2"x4") STUDS @ 400mm (16") O.C. 38x89 (2"x4") SILL PLATE ON DAMPPROOFING MATERIAL, 13mm (1/2") DIA. ANCHOR BOLTS 200mm (8") LONG, EMBEDDED MIN. 100mm (4") INTO CONC. @ 2400mm (7'-10") O.C. 100mm (4") HIGH CONC. CURB ON 350x155 (14"x6") CONC. FOOTING, ADD HORIZ. BLOCKING AT MID-HEIGHT IF WALL IS UNFINISHED.

15. **STEEL BASEMENT COLUMN (SEE O.B.C. 9.15.3.3)**
89mm(3-1/2") DIA x 3.0mm(0.118) SINGLE WALL TUBE TYPE 2 ADJUSTABLE STL. COL. W/ MIN. CAPACITY OF 71.2kN (16,000lbs.) AT A MAX. EXTENSION OF 2318mm (7'-7 1/2") CONFORMING TO CAN/CGSB-7.2-94, AND WITH 150x150x9.5 (6"x6"x3/8") STL. PLATE TOP & BOTTOM. 870x870x410 (34"x34"x16") CONC. FOOTING ON UNDISTURBED SOIL OR ENGINEERED FILL CAPABLE OF SUSTAINING A PRESSURE OF 150 Kpa. MINIMUM AND AS PER SOILS REPORT.

15A. **STEEL BASEMENT COLUMN (SEE O.B.C. 9.15.3.3)**
89mm(3-1/2") DIA x 4.78mm(.188) FIXED STL. COL. WITH 150x150x9.5 (6"x6"x3/8") STL. TOP & BOTTOM PLATE ON 1070x1070x460 (42"x42"x18"). CONC. FOOTING ON UNDISTURBED SOIL OR ENGINEERED FILL CAPABLE OF SUSTAINING A PRESSURE OF 150 Kpa. MIN. AND AS PER SOILS REPORT.

15B. **STEEL COLUMN**
90mm(3-1/2") DIA x 4.78mm(.188) NON-ADJUSTABLE STL. COL. TO BE ON 150x150x9.5 (6"x6"x3/8") STEEL TOP PLATE, & BOTTOM PLATE. BASE PLATE 120x250x12.5 (4 1/2"x10"x1/2") WITH 2-12mm DIA. x 300mm LONG x50mm HOOK ANCHORS (2-1/2"x12"x2") FIELD WELD COL. TO BASE PLATE.

16. BEAM POCKET OR 300x150 (12"x6") POURED CONC. NIB WALLS. MIN. BEARING 90mm (3-1/2")

17. 19x64 (1"x3") CONTINUOUS WOOD STRAPPING BOTH SIDES OF STEEL BEAM.

18. **GARAGE SLAB**
100mm (4") 32MPa (4640psi) CONC. SLAB WITH 5-8% AIR ENTRAINMENT ON OPT. 100 (4") COARSE GRANULAR FILL WITH COMPACTED SUB-BASE OR COMPACTED NATIVE FILL. SLOPE TO FRONT.

19. **GARAGE CEILINGS/INTERIOR WALLS**
13mm (1/2") GYPSUM BOARD ON WALL AND CEILING BETWEEN HOUSE AND GARAGE. TAPE AND SEAL ALL JOINTS AIRTIGHT PER O.B.C. 9.10.9.16. WALLS (R22), CEILINGS (R31). REFER TO SB-12, TABLE 3.1.1.2.A. FOR REQUIRED THERMAL INSULATION.

20. DOOR AND FRAME GASPROOFED. DOOR EQUIPPED WITH SELF CLOSING DEVICE AND WEATHERSTRIPPING PER OBC 9.10.13.15.

21. **EXTERIOR STEP**
PRECAST CONCRETE STEP OR WOOD STEP WHERE NOT EXPOSED TO WEATHER. MAX. RISE 200mm (7-7/8") MIN. TREAD 250mm (9-1/2"). SEE OBC. 9.8.9.2., 9.8.9.3. & 9.8.10.

22. **DRYER EXHAUST (OBC-6.2.3.8.(7) & 6.2.4.11.)**
CAPPED DRYER EXHAUST VENTED TO EXTERIOR. (USE 100mm (4") DIA. SMOOTH WALL VENT PIPE)

23. **INSULATED ATTIC ACCESS (OBC-9.19.2.1. & SB12-3.1.1.8)**
ATTIC ACCESS HATCH WITH MIN. DIMENSION OF 545x610mm (21 1/2"x24") & A MIN. AREA OF 0.32 SQ.M. (3.44 SQ.FT.) WITH WEATHERSTRIPPING. RSI 3.52 (R20) RIGID INSUL. BACKING.

24. **FIREPLACE CHIMNEYS OBC. 9.21.**
TOP OF FIREPLACE CHIMNEY SHALL BE 915mm (3'-0") ABOVE THE HIGHEST POINT AT WHICH IT COMES IN CONTACT WITH THE ROOF AND 610mm (2'-0") ABOVE THE ROOF SURFACE WITHIN A HORIZ. DISTANCE OF 3050mm (10'-0") FROM THE CHIMNEY.

25. LINEN CLOSET, 4 SHELVES MIN. 350mm (14") DEEP.

26. MECHANICAL EXHAUST FAN. VENTED TO EXTERIOR AS REQUIRED BY OBC. 9.32.3.5. & 9.32.3.10.

27. **STEEL BEARING PLATE FOR MASONRY WALLS**
280x280x16 (11"x11"x5/8") STL. PLATE FOR STL BEAMS AND 280x280x12 (11"x11"x1/2") STL. PLATE FOR WOOD BEAMS BEARING ON CONC. BLOCK PARTYWALL. ANCHORED WITH 2-19mm (3/4") x 200mm (8") LONG GALV. ANCHORS WITHIN SOLID BLOCK COURSE. LEVEL WITH NON-SHRINK GROUT.
OR
SOLID WOOD BEARING FOR WOOD STUD WALLS
SOLID BEARING TO BE AT LEAST AS WIDE AS THE SUPPORTED MEMBER. SOLID WOOD BEARING COMPRISED OF BUILT-UP WOOD STUDS TO BE CONSTRUCTED IN ACCORDANCE WITH OBC 9.17.4.2(2).

28. RESERVED

29. **BEARING WOOD POST (BASEMENT) (OBC 9.17.4.)**
3-38x140 (3-2"x6") BUILT-UP-POST ON METAL BASE SHOE ANCHORED TO CONC. WITH 12.7 DIA. BOLT. 610x610x300 (24"x24"x12") CONC. FOOTING.

30. **STEPPED FOOTINGS OBC 9.15.3.9.**
MIN. HORIZ. STEP = 600mm (24").
MAX. VERT. STEP = 600mm (24")

31. **SLAB ON GRADE**
MIN. 100mm (4") CONCRETE SLAB ON GRADE ON 100mm (4") COARSE GRANULAR FILL. REINFORCED WITH 6x6-W2.9xW2.9 MESH PLACED NEAR MID-DEPTH OF SLAB. CONC. STRENGTH 32 MPa (4640 psi) WITH 5-8% AIR ENTRAINMENT ON COMPACTED SUB-GRADE. WHERE REQUIRED. REFER TO OBC SB-12. TABLE 3.1.1.2.A. FOR REQUIRED MINIMUM INSULATION UNDER SLAB.

32. ◆ **DIRECT VENTING GAS FURNACE/ H.W.T VENT**
DIRECT VENT FURNACE TERMINAL MIN. 900mm (36") FROM A NATURAL GAS REGULATOR. MIN. 300mm (12") ABOVE FIN. GRADE. FROM ALL OPENINGS, EXHAUST AND INTAKE VENTS. HRV INTAKE TO BE A MIN. OF 1830mm (6'-0") FROM ALL EXHAUST TERMINALS. REFER TO GAS UTILIZATION CODE. ALL AIR INTAKES SHALL BE LOCATED SO THAT THEY ARE SEPARATED FROM KITCHEN EXHAUST BY 3.0M IN COMPLIANCE WITH O.B.C. DIV.-B TABLE 6.2.3.12.

33. **DIRECT VENTING GAS FIREPLACE VENT**
DIRECT VENT GAS FIREPLACE. VENT TO BE A MINIMUM 300mm (12") FROM ANY OPENING AND ABOVE FIN. GRADE. REFER TO GAS UTILIZATION CODE.

34. **SUBFLOOR, JOIST STRAPPING AND BRIDGING**
16mm (5/8") T & G SUBFLOOR ON WOOD FLOOR JOISTS. FOR CERAMIC TILE APPLICATION (* SEE OBC 9.30.6. *) 6mm (1/4") PANEL TYPE UNDERLAY UNDER RESILIENT & PARQUET FLOORING. (* SEE OBC 9.30.2.*). FLOOR JOISTS WITH SPANS OVER 2100mm (6'-11") TO BE BRIDGED WITH 38x38 (2"x2") CROSS BRACING OR SOLID BLOCKING @ 2100mm (6'-11") O.C. MAX. AND WHERE SPECIFIED BY JOIST TABLES A-1 OR A-2 STRAPPING SHALL BE 19x64 (1"x3") @ 2100mm (6'-11") O.C. UNLESS A PANEL TYPE CEILING FINISH IS APPLIED. (* SEE OBC 9.23.9.4. *)

35. **EXPOSED BUILDING FACE OBC. 9.10.15. & SB-2-2.3.5.(2)**
EXTERIOR WALLS TO HAVE A FIRE RESISTANCE RATING OF NOT LESS THAN 45 min. WHERE LIMITING DISTANCE (LD) IS LESS THAN 1.2M (3'-11"). WHERE THE LD IS LESS THAN 600mm (1'-11") THE EXPOSING FACE SHALL BE CLAD IN NON-COMBUSTIBLE MATERIAL. SEE ELEVATIONS FOR ADDITIONAL NOTES. OFFENDING GARAGE WALLS INCLUDED.

36. **COLD CELLAR PORCH SLAB (OBC 9.39.)**
FOR MAX. 2500mm (8'-2") PORCH DEPTH (SHORTEST DIM.). 125mm (5") 32MPa (4640psi) CONC. SLAB WITH 5-8% AIR ENTRAINMENT. REINF. WITH 10M BARS @ 200mm (7 7/8") O.C. EACH WAY IN BOTTOM THIRD OF SLAB. MIN. 30mm (1 1/4") COVER. 600x600 (23 5/8"x23 5/8") 10M DOWELS @ 600mm (23 5/8") O.C., ANCHORED IN PERIMETER FDTN. WALLS. SLOPE SLAB MIN. 1.0% FROM HOUSE WALL. SLAB TO HAVE MIN. 75mm (3") BEARING ON FDTN. WALLS. PROVIDE (L7) LINTEL OVER CELLAR DOOR WITH 100mm (4") END BEARING.

37. THE FDTN. WALL SHALL NOT BE REDUCED TO LESS THAN 90mm (3-1/2") THICK TO A MAX. DEPTH OF 600mm (24") AND SHALL BE TIED TO THE FACING MATERIAL WITH METAL TIES SPACED 200mm (8") O.C. VERTICALLY AND 900mm (36") O.C. HORIZONTALLY. FILL SPACE BETWEEN WALL AND FACING SOLID WITH MORTAR.

38. **CONVENTIONAL ROOF FRAMING (2.0Kpa. SNOW LOAD)**
38x140 (2"x6") RAFTERS @ 400mm (16"O.C.) FOR MAX 11'-7" SPAN, 38x184 (2"x8") RIDGE BOARD, 38x89 (2"x4") COLLAR TIES AT MIDSPANS. CEILING JOISTS TO BE 38x89 (2"x4") @ 400mm (16") O.C. FOR MAX. 2830mm (9'-3") SPAN & 38x140 (2"x6") @ 400 (16") O.C. FOR MAX. 4450mm (14'-7") SPAN. RAFTERS FOR BUILT-UP ROOF TO BE 38x89 (2"x4") @ 600mm (24") O.C. WITH A 38x89 (2"x4") CENTRE POST TO THE TRUSS BELOW. LATERALLY BRACED @ 1800mm (6'-0") O.C. VERTICALLY.

GENERAL NOTES

WINDOWS:
1) **MINIMUM BEDROOM WINDOW –OBC. 9.9.10.1.–**
AT LEAST ONE BEDROOM WINDOW ON A GIVEN FLOOR IS TO HAVE MIN. 0.35m2 UNOBSTRUCTED GLAZED OR OPENABLE AREA WITH MIN. CLEAR WIDTH OF 380 mm (1'-3").
2) **WINDOW GUARDS –OBC. 9.8.8.1.(6).**
A GUARD IS REQUIRED WHERE THE TOP OF THE WINDOW SILL IS LOCATED LESS THAN 480mm (1'-7") ABOVE FIN. FLOOR AND THE DISTANCE FROM THE FIN. FLOOR TO THE ADJACENT GRADE IS GREATER THAN 1800mm (5'-11")
3) **EXTERIOR WINDOWS**
SHALL COMPLY WITH OBC DIV.-B 9.7.3. & SB12-3.1.1.9
4) ◆ **GLASS–STRUCTURAL SUFFICIENCY OF GLASS**
DOOR & WINDOW MANUFACTURER/ SUPPLIER TO PROVIDE ADEQUATE INFORMATION TO DEMONSTRATE COMPLIANCE WITH OBC DIV.-B 9.6.1.3.

GENERAL:
1) MECHANICAL VENTILATION IS REQUIRED TO COMPLY WITH OBC-DIV. B, 6.2.2. SEE MECHANICAL DRAWINGS.
2) ALL DOWNSPOUTS TO DRAIN AWAY FROM THE BUILDING AS PER OBC 9.26.18.2. & 5.6.2.2.(3) AND MUNICIPAL STANDARDS.
3) ALL WINDOW WELLS TO DRAIN TO FOOTING LEVEL PER OBC 9.14.6.3. CHECK WITH THE LOCAL AUTHORITY.
4) ◆ STUD WALL REINFORCEMENT FOR FUTURE GRAB BARS IN MAIN BATHROOM
REINFORCEMENT OF STUD WALLS SHALL BE INSTALLED ADJACENT TO WATER CLOSETS AND SHOWER OR BATHTUB IN MAIN BATHROOM. REFER TO OBC. DIV. B-9.5.2.3. & DETAIL PROVIDED.
5) ALL EXTERIOR DOORS TO COMPLY WITH THERMAL RESISTANCE AS STATED IN O.B.C. SB-12-3.1.1.9.
6) ALL AIR BARRIER SYSTEMS ARE REQUIRED TO COMPLY WITH O.B.C. DIV.-B 9.25.3.
7) ◆ ALL OUTDOOR AIR INTAKES SHALL BE LOCATED SO THAT THEY ARE SEPARATED FROM SOURCES OF CONTAMINATION (EXHAUST VENTS) IN COMPLIANCE WITH O.B.C. DIV.-B 6.2.3.12. AND TABLE 6.2.3.12.

LUMBER:
1) ALL LUMBER SHALL BE SPRUCE NO.2 GRADE, UNLESS NOTED OTHERWISE.
2) STUDS SHALL BE STUD GRADE SPRUCE, UNLESS NOTED OTHERWISE.
3) LUMBER EXPOSED TO THE EXTERIOR TO BE SPRUCE No.2 GRADE PRESSURE TREATED OR CEDAR, UNLESS NOTED OTHERWISE.
4) ALL LAMINATED VENEER LUMBER (L.V.L.) BEAMS, GIRDER TRUSSES, AND METAL HANGER CONNECTIONS SUPPORTING ROOF FRAMING TO BE DESIGNED & CERTIFIED BY TRUSS MANUFACTURER.
5) LVL BEAMS SHALL BE 2.0E -2950Fb MIN... NAIL EACH PLY OF LVL WITH 89mm (3 1/2") LONG COMMON WIRE NAILS @ 300mm (12") O.C. STAGGERED IN 2 ROWS FOR 184, 240 & 300mm (7 1/4", 9 1/2", 11 7/8") DEPTHS AND STAGGERED IN 3 ROWS FOR GREATER DEPTHS AND FOR 4 PLY MEMBERS ADD 13mm (1/2") DIA. GALVANIZED BOLTS BOLTED AT MID-DEPTH OF BEAM @ 915mm (3'-0") O.C.
6) PROVIDE FACE MOUNT BEAM HANGERS TYPE "SCL" MANUFACTURED BY SIMPSON STRONG-TIE OR EQUAL FOR ALL LVL BEAM TO BEAM CONNECTIONS UNLESS OTHERWISE NOTED. REFER TO ENG. FLOOR LAYOUTS.
7) JOIST HANGERS: PROVIDE METAL HANGERS FOR ALL JOISTS AND BUILT-UP WOOD MEMBERS INTERSECTING FLUSH BUILT-UP WOOD MEMBERS.
8) WOOD FRAMING NOT TREATED WITH A WOOD PRESERVATIVE, IN CONTACT WITH CONCRETE, SHALL BE SEPARATED FROM THE CONCRETE BY AT LEAST 2 mil POLYETHYLENE FILM. No. 50 (45lbs.) ROLL ROOFING OR OTHER DAMPPROOFING MATERIAL, EXCEPT WHERE THE WOOD MEMBER IS AT LEAST 150mm (6") ABOVE THE GROUND.

STEEL:
1) ◆ STRUCTURAL STEEL SHALL CONFORM TO CAN/CSA-G40-21 GRADE 350W. HOLLOW STRUCTURAL SECTIONS SHALL CONFORM TO CSA-G40.21 GRADE 350W CLASS 'H' "STRUCTURAL QUALITY STEEL". OBC. B-9.23.4.3.
2) REINFORCING STEEL SHALL CONFORM TO CSA-G30-18M GRADE 400R.

STUCCO:
1) ALL STUCCO WALLS TO HAVE A MINIMUM 10mm AIR SPACE BEHIND THE CLADDING WITH POSITIVE DRAINAGE TO THE EXTERIOR. THE EXTERIOR SHEATHING MUST NOT BE GYPSUM BASED. ALL STUCCO TO BE INSTALLED AS PER MANUFACTURERS SPECIFICATIONS.

LEGEND

CLASS 'B' VENT	EXHAUST FAN TO EXTERIOR
DUPLEX OUTLET (12" ABOVE SURFACE)	DUPLEX OUTLET (HEIGHT A.F.F)
WEATHERPROOF DUPLEX OUTLET	GFI DUPLEX OUTLET (HEIGHT A.F.F)
POT LIGHT	HEAVY DUTY OUTLET (220 volt)
LIGHT FIXTURE (PULL CHAIN)	LIGHT FIXTURE (CEILING MOUNTED)
SWITCH	LIGHT FIXTURE (WALL MOUNTED)
FLOOR DRAIN	HOSE BIB (NON-FREEZE)
SJ SINGLE JOIST	P.T. PRESSURE TREATED LUMBER
DJ DOUBLE JOIST	G.T. GIRDER TRUSS BY ROOF TRUSS MANUF.
TJ TRIPLE JOIST	
LVL LAMINATED VENEER LUMBER	
POINT LOAD FROM ABOVE	
F.A. FLAT ARCH	C.A. CURVED ARCH
M.C. MEDICINE CABINET (RECESSED)	
DOUBLE VOLUME WALL. SEE NOTE 39	CONCRETE BLOCK WALL
SB SOLID WOOD BEARING (SPRUCE No. 2) SOLID BEARING TO BE AS WIDE AS SUPPORTED MEMBER OR AS DIRECTED BY STRUCTURAL ENGINEER. SOLID BEARING TO BE MINIMUM 2 PIECES.	
SBFA SOLID WOOD BEARING TO MATCH FROM ABOVE	

SOIL GAS/ RADON CONTROL (OBC 9.1.1.7. & 9.13.4.)
PROVIDE CONSTRUCTION TO PREVENT LEAKAGE OF SOIL GAS INTO THE BUILDING IF REQUIRED.

CONTRACTOR MUST VERIFY ALL DIMENSIONS ON THE JOB AND REPORT ANY DISCREPANCY TO VA3 DESIGN BEFORE PROCEEDING WITH THE WORK. ALL DRAWINGS AND SPECIFICATIONS ARE INSTRUMENTS OF SERVICE AND THE PROPERTY OF VA3 DESIGN WHICH IF REQUESTED, MUST BE RETURNED AT THE COMPLETION OF THE WORK. ALL DRAWINGS TO BE USED FOR CONSTRUCTION ONLY AFTER BUILDING PERMIT HAS BEEN ISSUED.

39. **TWO STOREY VOLUME SPACES**
-FOR A MAXIMUM 5490 mm (18'-0") HEIGHT AND MAXIMUM SUPPORTED ROOF TRUSS LENGTH OF 6.0m, PROVIDE 2-38x140 (2-2"x6") SPR.#2 CONTIN. STUDS @ 300mm (12") O.C. (TRIPLE UP AT EVERY THIRD DOUBLE STUD FOR BRICK WALLS) C/W 9.6 (3/8") THICK EXT. PLYWOOD SHEATHING. PROVIDE SOLID WOOD BLOCKING BETWEEN WOOD STUDS @ 1220 mm (4'-0") O.C. VERTICALLY. -FOR WALLS WITH HORIZ. DISTANCES NOT EXCEEDING 2900 mm (9'-6"). PROVIDE 38x140 (2"x6") STUDS @ 400 (16") O.C. WITH CONTINUOUS 2-38x140 (2-2"x6")TOP PLATES + 1-38x140 (1-2"x6") BOTTOM PLATE & MINIMUM OF 3-38x184 (3-2"x8") CONT. HEADER AT GRND. CEILING LEVEL TOE-NAILED & GLUED AT TOP, BOTTOM PLATES AND HEADERS.

40. TYPICAL 1 HOUR RATED PARTY WALL. REFER TO DETAILS FOR TYPE AND SPECIFICATIONS.

41. **FOUNDATION WALL (W.O.D./W.O.B.)**
- WHERE GRADE TO T/O BASEMENT SLAB EXCEEDS 1200mm (3'-11") A 250mm (10") WIDE FOUNDATION WALL IS REQUIRED.

42. **EXTERIOR WALLS FOR WALK-OUT CONDITIONS**
THE EXTERIOR BASEMENT STUD WALL TO BE 38x140 (2"x6") STUDS @ 400mm (16") o.c. OR 38x89 (2"x4") STUDS @ 300mm (12")o.c.

DRAIN WATER HEAT RECOVERY UNIT (DWHR)
PER SB12-3.1.1.12., A DRAIN WATER HEAT RECOVERY (DWHR) UNIT SHALL BE INSTALLED IN EACH DWELLING UNIT TO RECEIVE DRAIN WATER FROM ALL SHOWERS OR FROM AT LEAST TWO SHOWERS WHERE THERE ARE TWO OR MORE SHOWERS IN THE DWELLING UNIT. DOES NOT APPLY IF THERE ARE NO SHOWERS OR NO STOREY BENEATH ANY OF THE SHOWERS.

◆ UPDATED ONT. REG. 332/12-2012 OBC Amendment 0. Reg. 88/19 JANUARY 01, 2020

WOOD LINTELS AND BUILT-UP WOOD BEAMS

L1	2/38 x 184 (2/2" x 8") SPR.#2
B1	3/38 x 184 (3/2" x 8") SPR.#2
B2	4/38 x 184 (4/2" x 8") SPR.#2
B7	5/38 x 184 (5/2" x 8") SPR.#2
L3	2/38 x 235 (2/2" x 10") SPR.#2
B3	3/38 x 235 (3/2" x 10") SPR.#2
B4	4/38 x 235 (4/2" x 10") SPR.#2
L5	2/38 x 286 (2/2" x 12") SPR.#2
B5	3/38 x 286 (3/2" x 12") SPR.#2
B6	4/38 x 286 (4/2" x 12") SPR.#2

LOOSE STEEL LINTELS

L7	89 x 89 x 6.4L (3-1/2" x 3-1/2" x 1/4"L)
L8	89 x 89 x 7.9L (3-1/2" x 3-1/2" x 5/16"L)
L9	102 x 89 x 7.9L (4" x 3-1/2" x 5/16"L)
L10	127 x 89 x 7.9L (5" x 3-1/2" x 5/16"L)
L11	152 x 89 x 10.0L (6" x 3-1/2" x 3/8"L)
L12	152 x 102 x 11.0L (6"x 4" x 7/16"L)
L13	178 x 102 x 13.0L (7"x 4" x 1/2"L)

LAMINATED VENEER LUMBER (LVL) BEAMS

LVL1A	1-1 3/4"x7 1/4" (1-45x184)
LVL1	2-1 3/4"x7 1/4" (2-45x184)
LVL2	3-1 3/4"x7 1/4" (3-45x184)
LVL3	4-1 3/4"x7 1/4" (4-45x184)
LVL4A	1-1 3/4"x9 1/2" (1-45x240)
LVL4	2-1 3/4"x9 1/2" (2-45x240)
LVL5	3-1 3/4"x9 1/2" (3-45x240)
LVL5A	4-1 3/4"x9 1/2" (4-45x240)
LVL6A	1-1 3/4"x11 7/8" (1-45x300)
LVL6	2-1 3/4"x11 7/8" (2-45x300)
LVL7	3-1 3/4"x11 7/8" (3-45x300)
LVL8	4-1 3/4"x11 7/8" (4-45x300)

DOOR SCHEDULE

1.	EXTERIOR DOOR	815 x 2030 x 45 (2'-8" x 6'-8" x 1-3/4") INSULATED MIN. RSI 0.7 (R4)
1A	EXTERIOR DOOR	865 x 2030 x 45 (2'-10" x 6'-8" x 1-3/4")
1B	EXTERIOR DOOR	915 x 2030 x 45 (3'-0" x 6'-8" x 1-3/4") INSULATED MIN. RSI 0.7 (R4)
1C	EXTERIOR DOOR	915 x 2438 x 45 (3'-0" x 8'-0" x 1-3/4") INSULATED MIN. RSI 0.7 (R4)
1D	EXTERIOR DOOR	860 x 2438 x 45 (2'-10" x 8'-0" x 1-3/4") INSULATED MIN. RSI 0.7 (R4)
2.	INTERIOR DOOR	815 x 2030 x 35 (2'-8" x 6'-8" x 1-3/8")
2A	EXTERIOR DOOR	815 x 2030 x 45 (2'-8" x 6'-8" x 1-3/4") 20 MIN. RATED DOOR AND FRAME, WITH APPROVED SELF CLOSING DEVICE
2B	EXTERIOR DOOR	815 x 2030 x 45 (2'-8" x 6'-8" x 1-3/4") (WEATHER STRIPPING INSTALLED)
2C	INTERIOR DOOR	815 x 2438 x 45 (2'-8" x 8'-0" x 1-3/4")
2D	EXTERIOR DOOR	815 x 2438 x 45 (2'-8" x 8'-0" x 1-3/4") 20 MIN. RATED DOOR AND FRAME, WITH APPROVED SELF CLOSING DEVICE
3.	INTERIOR DOOR	760 x 2030 x 35 (2'-6" x 6'-8" x 1-3/8")
3A	INTERIOR DOOR	710 x 2030 x 35 (2'-4" x 6'-8" x 1-3/8")
3B	INTERIOR DOOR	760 x 2438 x 35 (2'-6" x 8'-0" x 1-3/8")
3C	INTERIOR DOOR	710 x 2438 x 35 (2'-4" x 8'-0" x 1-3/8")
4.	INTERIOR DOOR	610 x 2030 x 35 (2'-0" x 6'-8" x 1-3/8")
4A	INTERIOR DOOR	660 x 2030 x 35 (2'-2" x 6'-8" x 1-3/8")
4C	INTERIOR DOOR	660 x 2438 x 35 (2'-2" x 8'-0" x 1-3/8")
5.	INTERIOR DOOR	460 x 2030 x 35 (1'-6" x 6'-8" x 1-3/8")
6.	EXTERIOR DOOR	815 x 2030 x 45 (2'-8" x 6'-8" x 1-3/4") SOLID WOOD CORE

LICENSED PROFESSIONAL ENGINEER
S. J. BOYD
90214198
PROVINCE OF ONTARIO

FEB 9, 2021

MECHANICAL SYMBOLS

HEAT PIPE	WARM AIR
PLUMBING (TOILET)	RETURN AIR DUCT
PLUMBING (BATH, SINK,SHOWER)	

SMOKE ALARM (REFER TO OBC 9.10.19)
PROVIDE 1 PER FLOOR, NEAR THE STAIRS CONNECTING THE FLOOR LEVEL AND ALSO 1 IN EACH BEDROOM NEAR HALL DOOR. ALARMS TO BE CONNECTED TO AN ELECTRICAL CIRCUIT AND INTERCONNECTED TO ACTIVATE ALL ALARMS IF 1 SOUNDS. BATTERY BACK-UP REQUIRED. SMOKE ALARMS TO INCORPORATE VISUAL SIGNALLING COMPONENT (9.10.19.3.(3)).

CARBON MONOXIDE ALARMS (OBC 9.33.4.)
WHERE A FUEL-BURNING APPLIANCE IS INSTALLED IN A DWELLING UNIT, A CARBON MONOXIDE ALARM CONFORMING TO CAN./CSA-6.19 OR UL2034 SHALL BE INSTALLED ADJACENT TO EACH SLEEPING AREA. CARBON MONOXIDE DETECTOR(S) SHALL BE PERMANENTLY WIRED SO THAT ITS ACTIVATION WILL ACTIVATE ALL CARBON MONOXIDE DETECTORS AND BE EQUIPPED WITH AN ALARM THAT IS AUDIBLE WITHIN BEDROOMS WHEN THE INTERVENING DOORS ARE CLOSED. REFER TO MANUFACTURER FOR ADDITIONAL REQUIREMENTS.

REFER TO UNIT DRAWINGS OR PAGE CN-2 FOR SB-12 COMPLIANCE PACKAGE A1 TO BE USED FOR THIS MODEL. The minimum thermal performance of building envelope and equipment shall conform to the selected package unless otherwise noted.

2020 VA3 REFERENCE NUMBER **A1**

no.	description	date	by
9		.	.
8		.	.
7		.	.
6		.	.
5		.	.
4		.	.
3		.	.
2	UPDATE TO OBC VER 2020	FEB 09-21	RC
1	ISSUE FOR CLIENT REVIEW	AUG 04-17	RC

The undersigned has reviewed and takes responsibility for this design and has the qualifications and meets the requirements set out in the Ontario Building Code to be a Designer.
qualification information
Wellington Jno-Baptiste [signature] 25591
name signature BCIN
registration information
VA3 Design Inc. 42658

Contractor must verify all dimensions on the job and report any discrepancy to the Designer before proceeding with the work. All drawings and specifications are instruments of service and the property of the Designer which must be returned at the completion of the work. Drawings are not to be scaled.

VA3 DESIGN
255 Consumers Rd Suite 120
Toronto ON M2J 1R4
t 416.630.2255 f 416.630.4782
va3design.com

BAYVIEW WELLINGTON — **CONST NOTE** –

project name: ALCONA	municipality: INNISFIL,ON.	project no.: 13049
date: MAY 2016	CONSTRUCTION NOTES	drawing no.: CN1
drawn by: RC	checked by: –	scale: 3/16" = 1'-0"
	file name: 13049-CN-A1 VER 2020	

RICHARD – H:\ARCHIVE\WORKING\2013\13049 BW\UNITS\CN Notes\13049-CN-A1 VER 2020.dwg – Tue – Feb 9 2021 – 11:14 AM

All drawings specifications, related documents and design are the copyright property of VA3 DESIGN. Reproduction of this property in whole or in part is strictly prohibited without VA3 DESIGN's written permission.

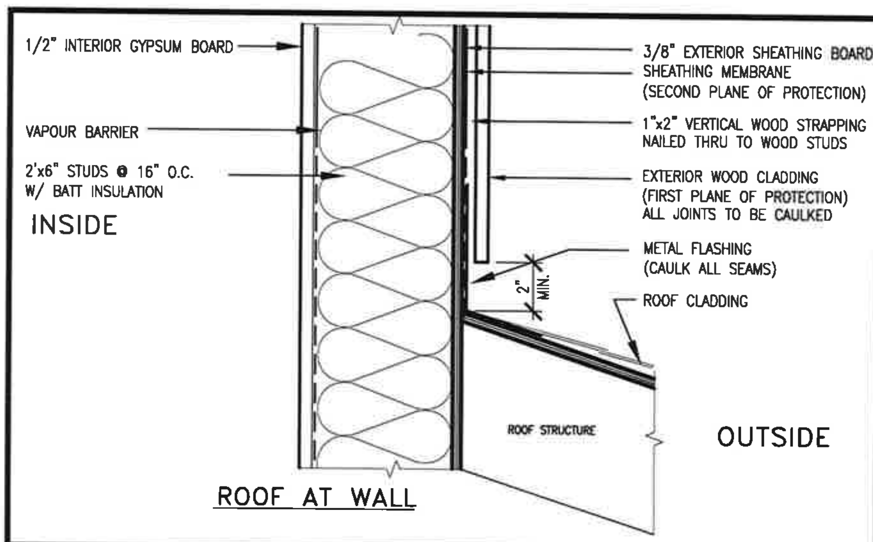

ROOF AT WALL

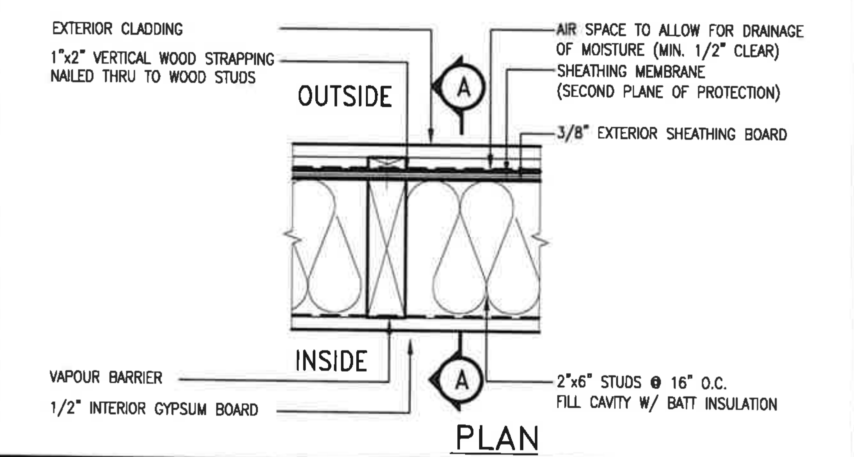

PLAN

EXTERIOR WOOD CLADDING WALL ASSEMBLY

STUD WALL REINFORCEMENT FOR FUTURE GRAB BARS IN MAIN BATHROOM

REINFORCEMENT OF WOOD STUD WALLS SHALL BE INSTALLED ADJACENT TO WATER CLOSETS AND SHOWER OR BATHTUB IN MAIN BATHROOM PER OBC. DIV. B-9.5.2.3. FUTURE GRAB BARS TO BE MOUNTED TO RESIST HORIZ. AND VERT. LOADS OF 1.3 KN (300 lb) REFER TO OBC. DIV. B- WATER CLOSET 3.8.3.8.(3)(a) & 3.8.3.8.(3)(c).. SHOWER 3.8.3.13.(2)(g).. & BATHTUB 3.8.3.13.(4)(e). AND DETAILS PROVIDED BELOW.

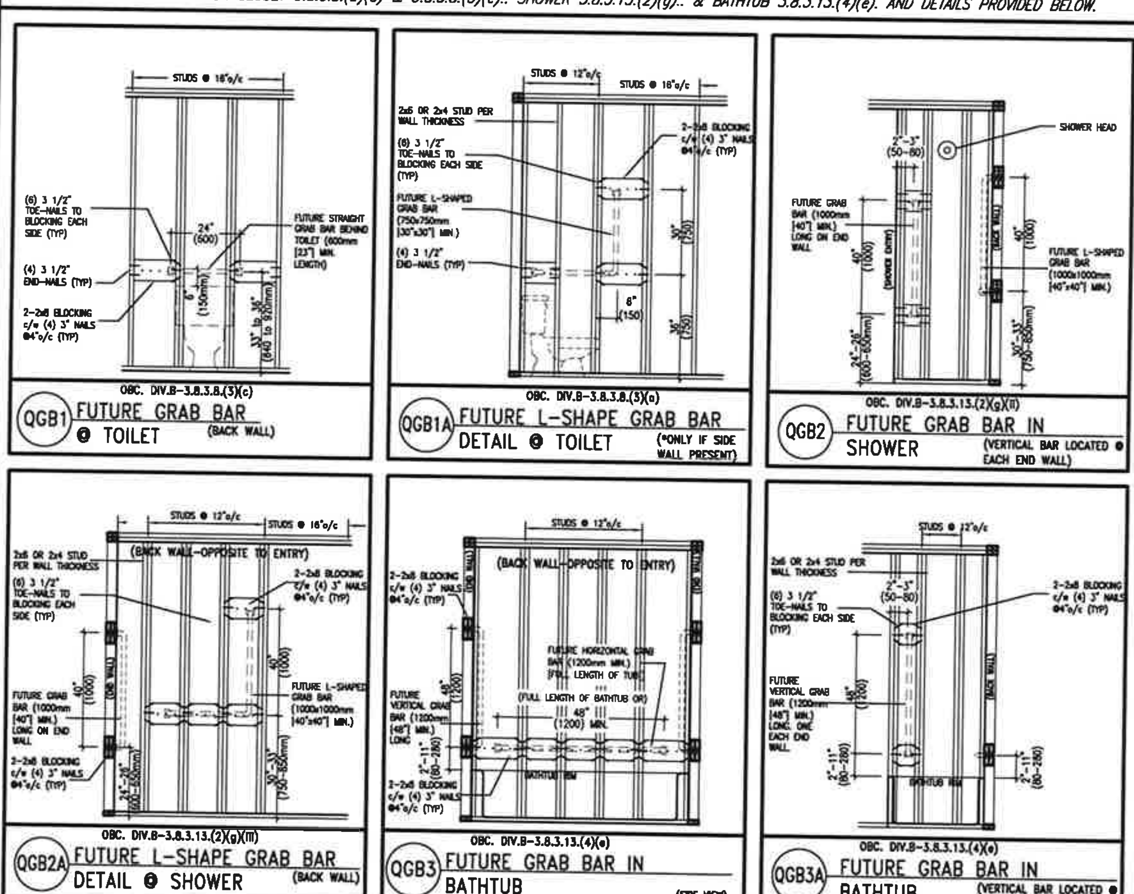

OBC. DIV.B-3.8.3.8.(3)(c) (QGB1) FUTURE GRAB BAR @ TOILET (BACK WALL)

OBC. DIV.B-3.8.3.8.(3)(a) (QGB1A) FUTURE L-SHAPE GRAB BAR DETAIL @ TOILET (*ONLY IF SIDE WALL PRESENT)

OBC. DIV.B-3.8.3.13.(2)(g)(II) (QGB2) FUTURE GRAB BAR IN SHOWER (VERTICAL BAR LOCATED @ EACH END WALL)

OBC. DIV.B-3.8.3.13.(2)(g)(III) (QGB2A) FUTURE L-SHAPE GRAB BAR DETAIL @ SHOWER (BACK WALL)

OBC. DIV.B-3.8.3.13.(4)(e) (QGB3) FUTURE GRAB BAR IN BATHTUB (SIDE VIEW)

OBC. DIV.B-3.8.3.13.(4)(e) (QGB3A) FUTURE GRAB BAR IN BATHTUB (VERTICAL BAR LOCATED @ EACH END WALL)

2020-QUALE-GB-DETAIL.dwg

OUTDOOR AIR INTAKE SEPARATION

ALL OUTDOOR AIR INTAKE VENTS TO BE SEPARATED A MINIMUM DISTANCE FROM SOURCES OF CONTAMINATION PER OBC. DIV. B- TABLE 6.2.3.12.

- *KITCHEN EXHAUST. 3.0m*
- *DRIVEWAY, PARKING SPACE, ROAD. 1.5m*
- *SOLID FUEL APPLIANCE EXHAUST 3.0m*

KIT-EX-NOTE-2020.dwg

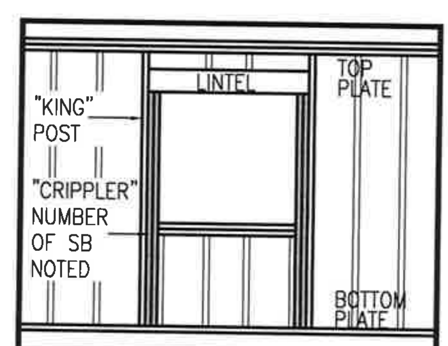

"CRIPPLE" DETAIL

MAX. HEIGHT FOR 2"x4" GARAGE WALL IS AS FOLLOW:

2"x4" @ 16" O.C. – 9'-10"
2-2"x4" @ 12" O.C. – 10'-9"
3-2"x4" @ 16" O.C. – 11'-2"
3-2"x4" @ 12" O.C. – 12'-4"

NOTES:

1. FOR ROOF DESIGN SNOW LOAD OF UP TO 2.5 KPa. SUPPORTED ROOF TRUSS LENGTH OF 6.0m AND FLOOR JOIST LENGTH OF 2.5m OF ONE FLOOR.
2. PROVIDE HORIZONTAL SOLID BLOCKING @ 1200 O.C. (4'-0")
3. PROVIDE A MINIMUN OF 9.5mm (3/8") PLYWOOD OR OSB EXTERIOR SHEATHING ON THE EXTERIOR FACE.
4. FOR A 1/50 YEAR REFERENCE WIND PRESSURE OF 0.6 KPa.
5. STUDS GREATER THAN 9'-10" HIGH TO BE No. 2 SPF
6. STUD SPECIFICATION IS SUITABLE FOR BRICK VENEER OR SIDING.

** MAX. HEIGHT FOR 2"x6" EXTERIOR WALL IS AS FOLLOW:

2"x6" @ 16" O.C. – 12'-6"
2"x6" @ 12" O.C. – 13'-10"
2-2"x6" @ 16" O.C. – 15'-0"
2-2"x6" @ 12" O.C. – 17'-4"

MAX. HEIGHT FOR 2"x8" EXTERIOR WALL IS AS FOLLOWS:

2"x8" @ 16" O.C. – 16'-0"
2"x8" @ 12" O.C. – 17'-9"
2-2"x8" @ 16" O.C. – 20'-4"
2-2"x8" @ 12" O.C. – 22'-4"

NOTES:

1. FOR ROOF DESIGN SNOW LOAD OF UP TO 2.5 KPa
2. SUPPORTED ROOF TRUSS LENGTH OF 6.0m ONLY.
3. PROVIDE HORIZONTAL SOLID BLOCKING @ 1200 O.C. (4'-0")
4. PROVIDE A MINIMUM OF 9.5mm (3/8") PLYWOOD OR OSB EXTERIOR SHEATHING ON THE EXTERIOR FACE AND 12.5mm (1/2") GYPSUM BOARD ON THE INTERIOR FACE.
5. WALL FRAMING SHALL CONFORM TO OBC 9.23.10.1.(2)
6. FOR A 1/50 YEAR REFERENCE WIND PRESSURE OF 0.6 KPa
7. STUDS GREATER THAN 9'-10" HIGH TO BE No. 2 SPF.
8. STUD SPECIFICATION IS SUITABLE FOR BRICK VENEER OR SIDING.

** STUD INFORMATION TAKEN FROM OBC TABLE A-30

LICENSED PROFESSIONAL ENGINEER
S. J. BOYD
90214198
PROVINCE OF ONTARIO

FEB 9, 2021

no.	description	date	by
9	.	.	.
8	.	.	.
7	.	.	.
6	.	.	.
5	.	.	.
4	.	.	.
3	.	.	.
2	UPDATE TO OBC VER 2020	FEB 09-21	RC
1	ISSUE FOR CLIENT REVIEW	AUG 04-17	RC

The undersigned has reviewed and takes responsibility for this design and has the qualifications and meets the requirements set out in the Ontario Building Code to be a Designer.

qualification information
Wellington Jno-Baptiste — signature — 25591
name — BCIN
registration information
VA3 Design Inc. — 42658

Contractor must verify all dimensions on the job and report any discrepancy to the Designer before proceeding with the work. All drawings and specifications are instruments of service and the property of the Designer which must be returned at the completion of the work. Drawings are not to be scaled.

VA3 DESIGN
255 Consumers Rd Suite 120
Toronto ON M2J 1R4
t 416.630.2255 f 416.630.4782
va3design.com

BAYVIEW WELLINGTON

CONST NOTE

-

project name: ALCONA	municipality: INNISFIL,ON.	project no.: 13049
date: MAY 2016	CONSTRUCTION NOTES	drawing no.: CN2
drawn by: RC	checked by: -	scale: 3/16" = 1'-0"
file name: 13049-CN-A1 VER 2020		

RICHARD - H:\ARCHIVE\WORKING\2013\13049 BW\UNITS\CN Notes\13049-CN-A1 VER 2020.dwg - Tue - Feb 9 2021 - 11:14 AM

All drawings specifications, related documents and design are the copyright property of VA3 DESIGN. Reproduction of this property in whole or in part is strictly prohibited without VA3 DESIGN's written permission.

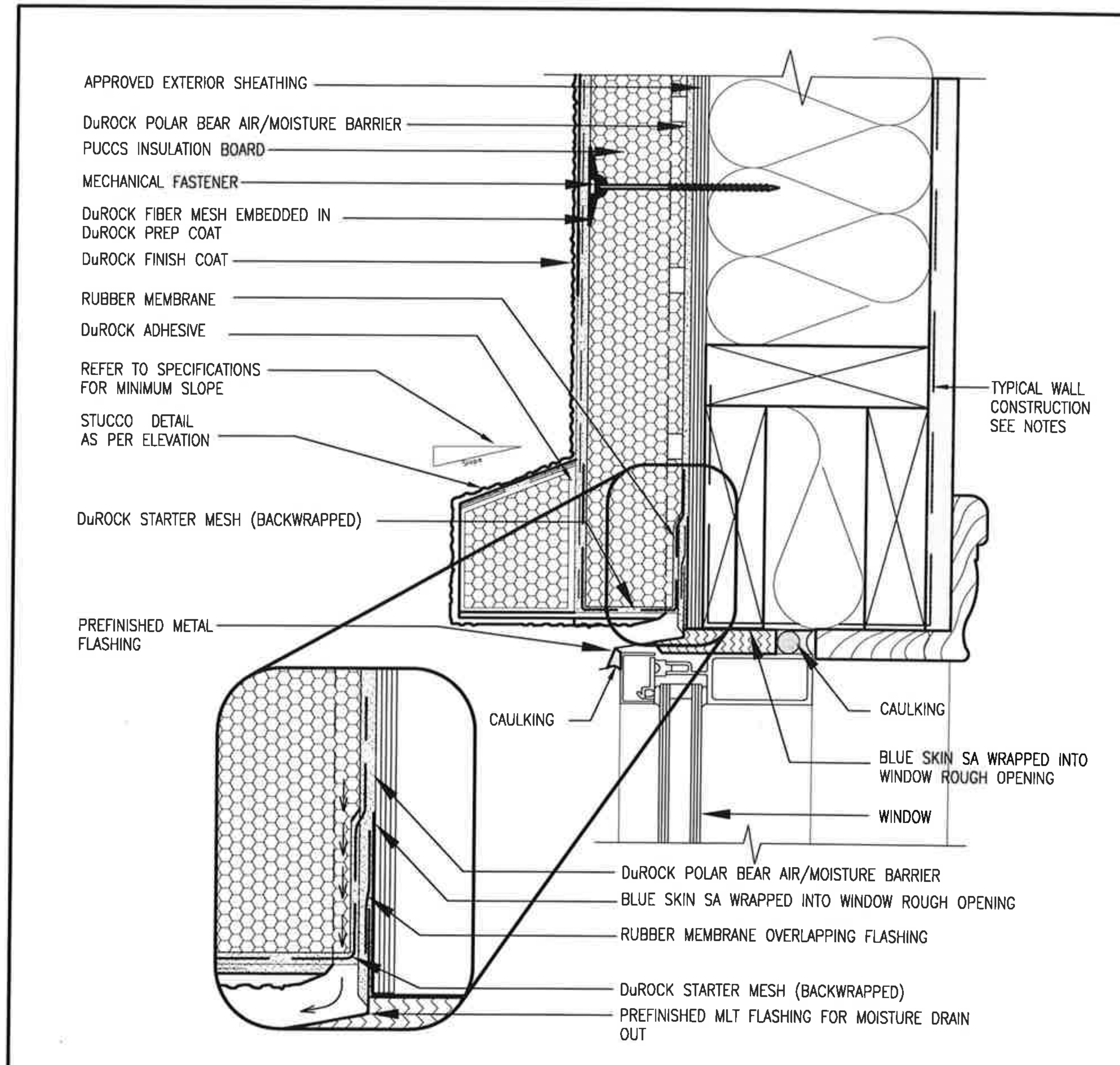

1 / CN3 — WINDOW HEADER
SCALE: 3"=1'-0"

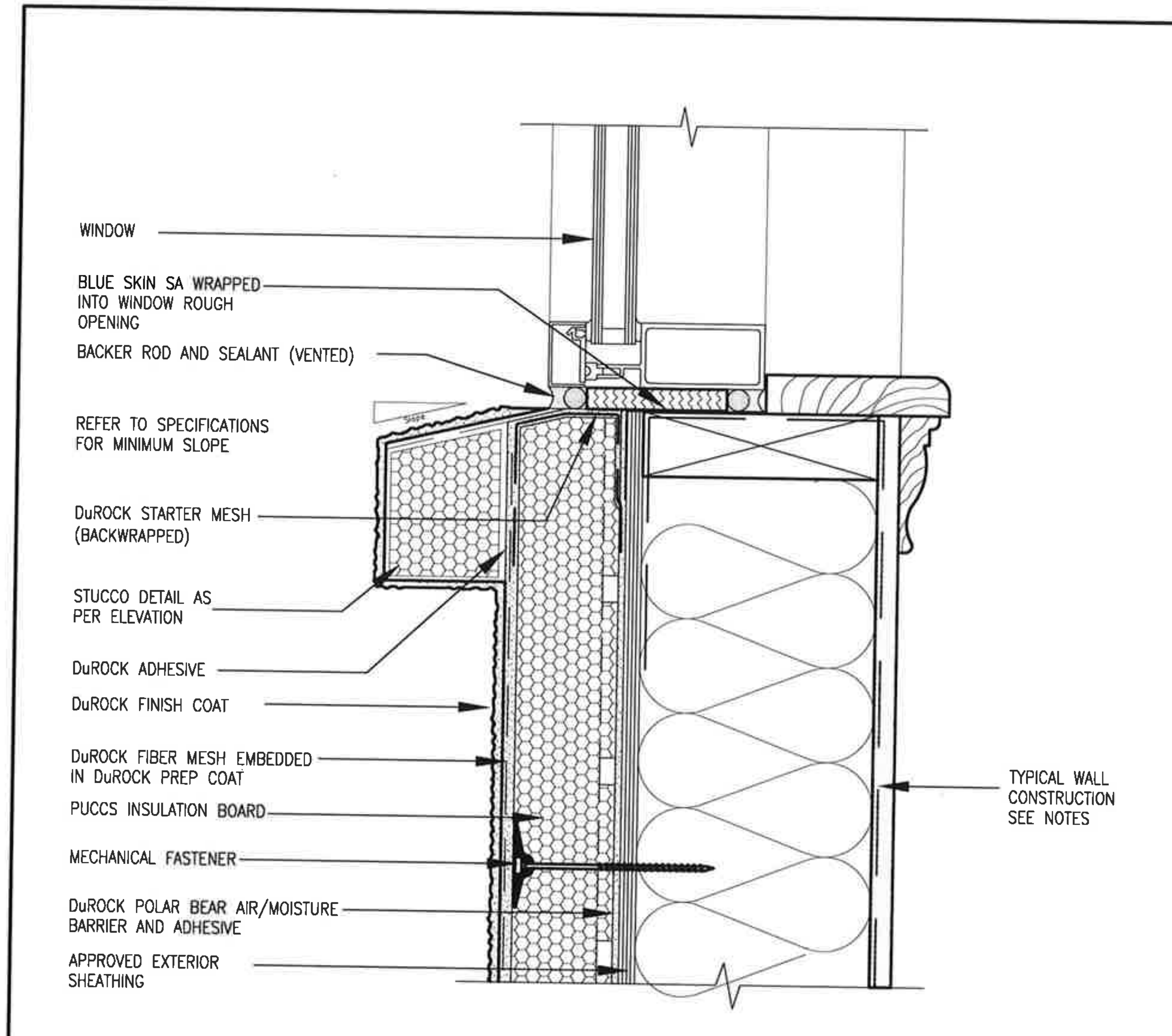

2 / CN3 — WINDOW SILL
SCALE: 3"=1'-0"

ALL STUCCO WALLS TO HAVE A MINIMUM 10mm AIR SPACE BEHIND THE CLADDING WITH POSITIVE DRAINAGE TO THE EXTERIOR. THE EXTERIOR SHEATHING MUST NOT BE GYPSUM BASED. ALL STUCCO TO BE INSTALLED AS PER MANUFACTURERS SPECIFICATIONS.
DETAILS ARE BASED ON DuROCK PUCCS SYSTEM

no.	description	date	by
1	ISSUE FOR CLIENT REVIEW	AUG 04-17	RC
2	UPDATE TO OBC VER 2020	FEB 09-21	RC
3			
4			
5			
6			
7			
8			
9			

The undersigned has reviewed and takes responsibility for this design and has the qualifications and meets the requirements set out in the Ontario Building Code to be a Designer.
qualification information
Wellington Jno-Baptiste 25591
registration information
VA3 Design Inc. 42658

Contractor must verify all dimensions on the job and report any discrepancy to the Designer before proceeding with the work. All drawings and specifications are instruments of service and the property of the Designer which must be returned at the completion of the work. Drawings are not to be scaled.

VA3 DESIGN
255 Consumers Rd Suite 120
Toronto ON M2J 1R4
t 416.630.2255 f 416.630.4782
va3design.com

BAYVIEW WELLINGTON
CONST NOTE
project name: ALCONA
municipality: INNISFIL,ON.
date: MAY 2016
drawn by: RC
checked by: -
scale: 3/16" = 1'-0"
CONSTRUCTION NOTES
file name: 13049-CN-A1 VER 2020
project no.: 13049
drawing no.: CN3

All drawings specifications, related documents and design are the copyright property of VA3 DESIGN. Reproduction of this property in whole or in part is strictly prohibited without VA3 DESIGN's written permission.

FOR 9 1/2" JOIST DEPTH

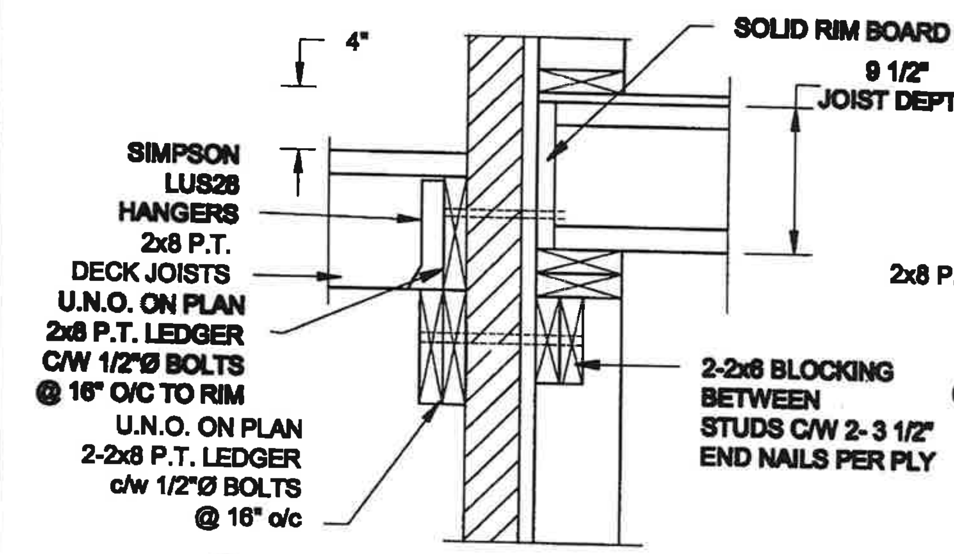

1A/S2 DECK FASTENING DETAIL
SCALE: 1" = 1'-0"

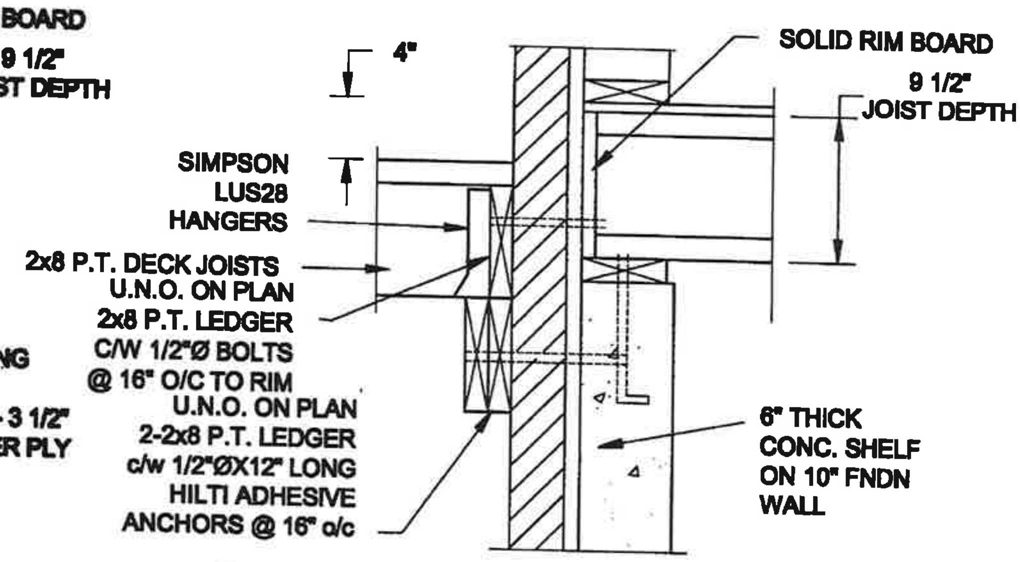

1B/S2 DECK FASTENING DETAIL
SCALE: 1" = 1'-0"

NOTE:
1. WHERE BACKFILL HEIGHT < 4'-7", PROVIDE 2x6 @ 16" o/c KNEEWALL ON 10" THICK CONC FNDN WALL
2. WHERE BACKFILL HEIGHT > 4'-7", PROVIDE 6" CONC SHELF FOR BRICK VENEER ON 10" THICK CONC FNDN WALL
3. FOOTING TO BE 22"x6" THICK UNLESS NOTED OTHERWISE ON PLAN.

FOR 11 7/8" JOIST DEPTH

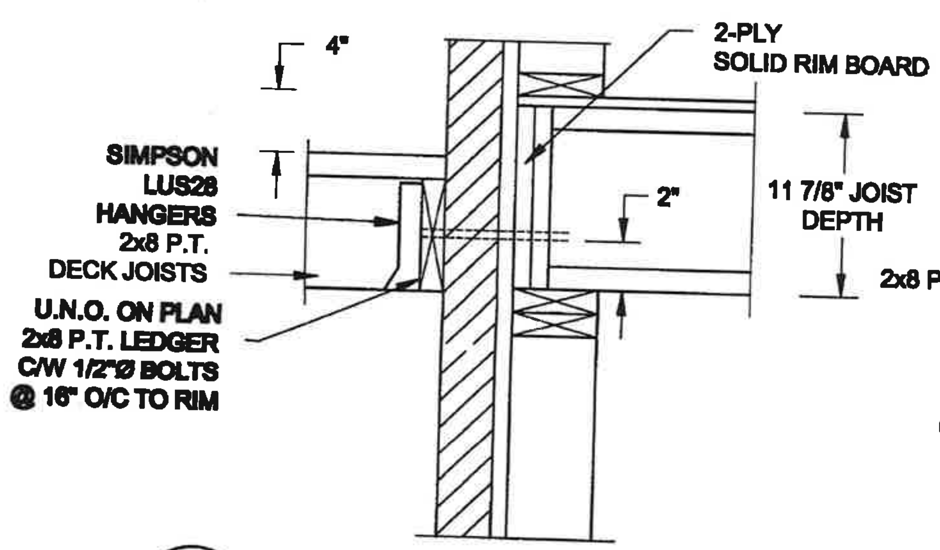

2A/S2 DECK FASTENING DETAIL
SCALE: 1" = 1'-0"

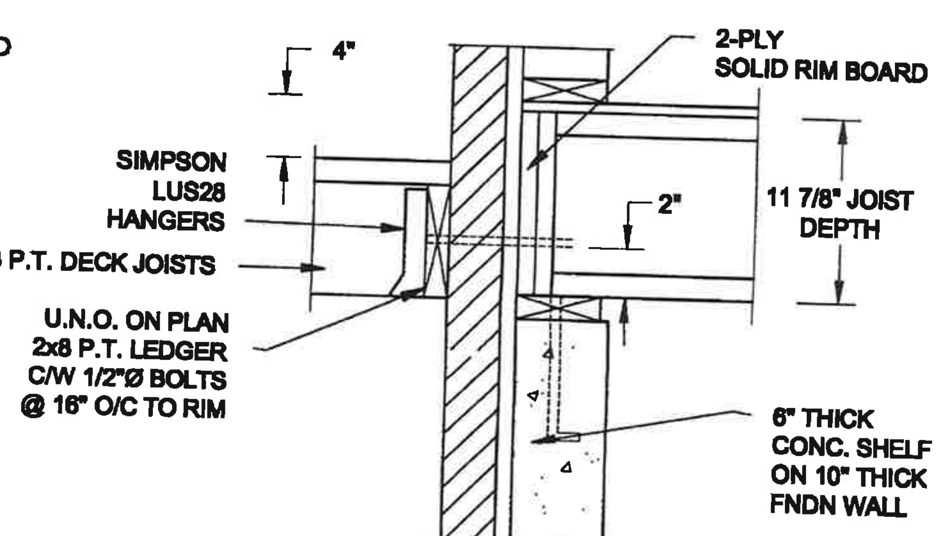

2B/S2 DECK FASTENING DETAIL
SCALE: 1" = 1'-0"

NOTE:
1. WHERE BACKFILL HEIGHT < 4'-7", PROVIDE 2x6 @ 16" o/c KNEEWALL ON 10" THICK CONC FNDN WALL
2. WHERE BACKFILL HEIGHT > 4'-7", PROVIDE 6" CONC SHELF FOR BRICK VENEER ON 10" THICK CONC FNDN WALL
3. FOOTING TO BE 22"x6" THICK UNLESS NOTED OTHERWISE ON PLAN.

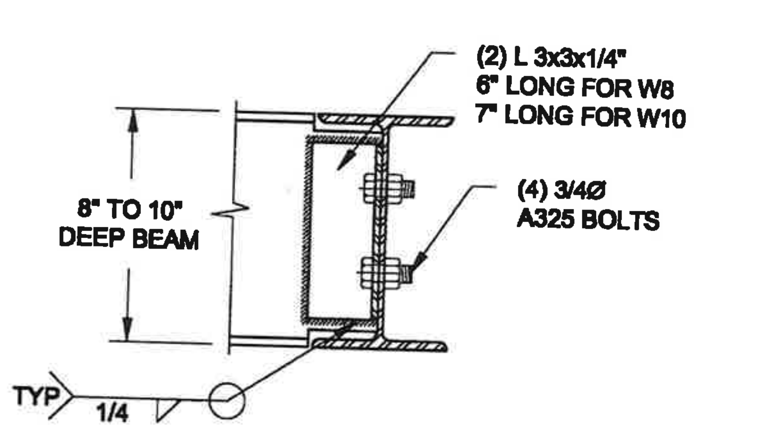

NOTE: DETAIL IS APPLICABLE TO W8x40 (W200x59) BEAM MAX AND W10x39 (W250x58) BEAM MAX.

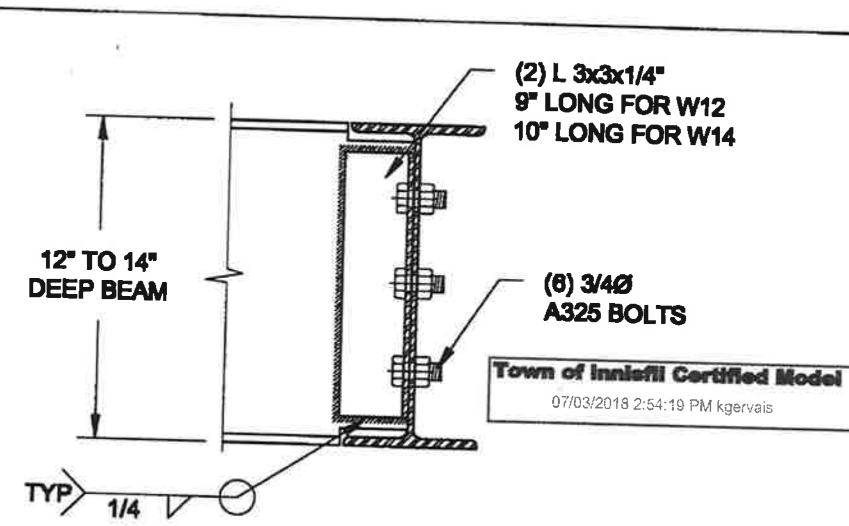

Town of Innisfil Certified Model
07/03/2018 2:54:19 PM kgervais

NOTE: DETAIL IS APPLICABLE TO W12x58 (W310x86) BEAM MAX AND W14x48 (W360x72) BEAM MAX.

3/S2 STEEL BEAM CONNECTION DETAIL
SCALE: 1-1/2" = 1'-0"

Scale: AS NOTED	QUAILE ENGINEERING LTD.	Engineer's Seal:	Project: BAYVIEW WELLINGTON HOMES - ALCONA PROJECT INNISFIL, ONTARIO	
Date: JUL-31-2017	38 Parkside Drive, UNIT 7 Newmarket, ON L3Y 8J9 T: 905-853-8547 E: quaile.eng@rogers.com	LICENSED PROFESSIONAL ENGINEER S. J. BOYD PROVINCE OF ONTARIO	TYPICAL STRUCTURAL DETAILS FOR SINGLES	
Drawn: SC / Checked: SJB		AUG 10, 2017	Project No.: 16-063	Drawing No.: S2

P:\Sam\D-2016\16-063 BAYVIEW WELLINGTON ALCONA SINGLES\16-063.dwg

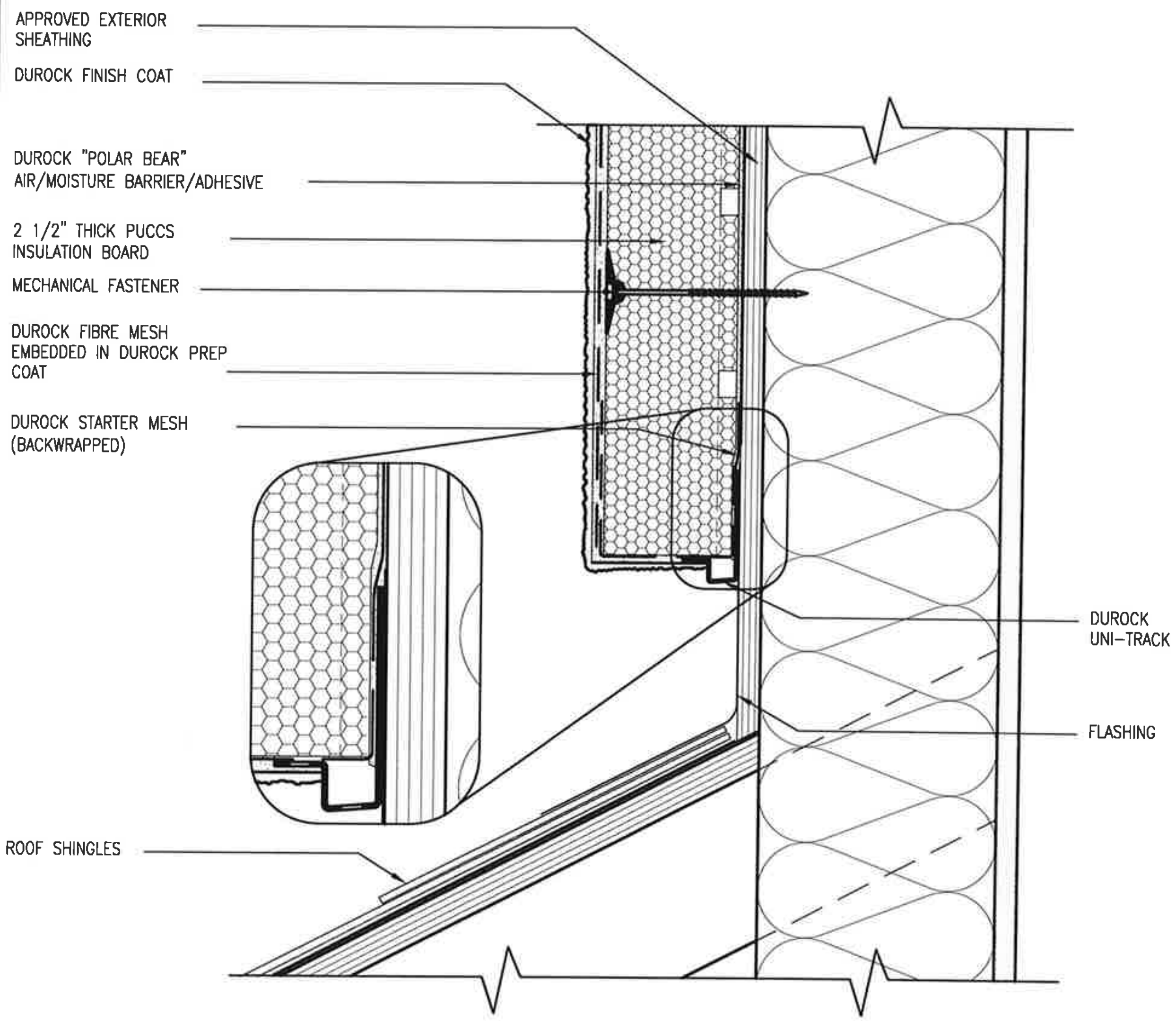

3
CN4

STUCCO TERMINATION @ ROOF

SCALE: 3"=1'-0"

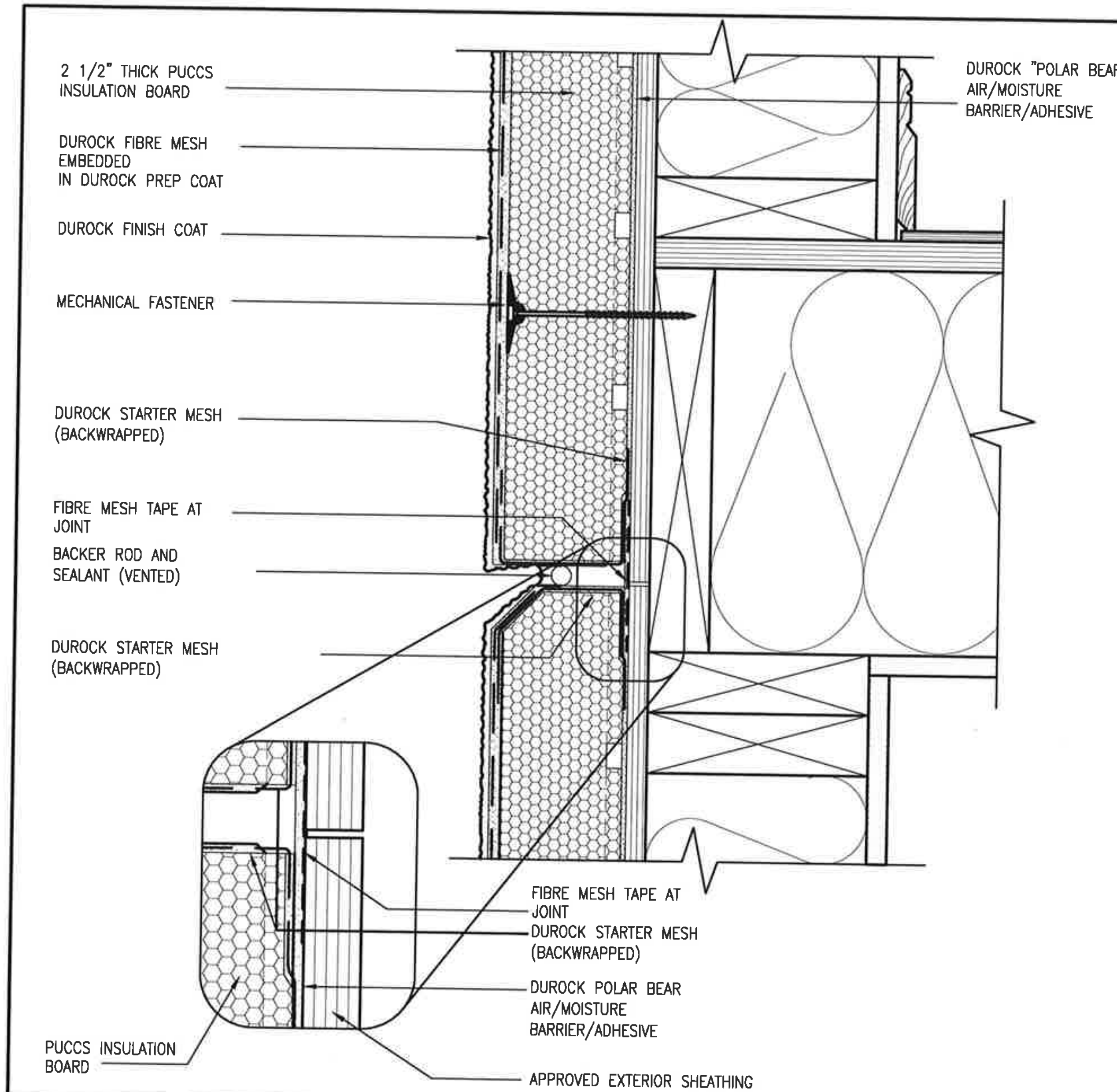

4
CN4

HORIZONTAL EXPANSION JOINT

SCALE: 3"=1'-0"

ALL STUCCO WALLS TO HAVE A MINIMUM 10mm AIR SPACE BEHIND THE CLADDING WITH POSITIVE DRAINAGE TO THE EXTERIOR. THE EXTERIOR SHEATHING MUST NOT BE GYPSUM BASED. ALL STUCCO TO BE INSTALLED AS PER MANUFACTURERS SPECIFICATIONS.
DETAILS ARE BASED ON DuROCK PUCCS SYSTEM

no.	description	date	by
9	.	.	.
8	.	.	.
7	.	.	.
6	.	.	.
5	.	.	.
4	.	.	.
3	.	.	.
2	UPDATE TO OBC VER 2020	FEB 09-21	RC
1	ISSUE FOR CLIENT REVIEW	AUG 04-17	RC

The undersigned has reviewed and takes responsibility for this design and has the qualifications and meets the requirements set out in the Ontario Building Code to be a Designer.
qualification information
Wellington Jno-Baptiste 25591
name signature BCIN
registration information
VA3 Design Inc. 42658

Contractor must verify all dimensions on the job and report any discrepancy to the Designer before proceeding with the work. All drawings and specifications are instruments of service and the property of the Designer which must be returned at the completion of the work. Drawings are not to be scaled.

VA3 DESIGN
255 Consumers Rd Suite 120
Toronto ON M2J 1R4
t 416.630.2255 f 416.630.4782
va3design.com

BAYVIEW WELLINGTON

CONST NOTE
-

project no. 13049
project name ALCONA
municipality INNISFIL,ON.
date MAY 2016
drawn by RC
checked by -
scale 3/16" = 1'-0"
CONSTRUCTION NOTES
file name 13049-CN-A1 VER 2020
drawing no. CN4

RICHARD - H:\ARCHIVE\WORKING\2013\13049.BW\UNITS\CN Notes\13049-CN-A1 VER 2020.dwg - Tue - Feb 9 2021 - 11:17 AM

All drawings specifications, related documents and design are the copyright property of VA3 DESIGN. Reproduction of this property in whole or in part is strictly prohibited without VA3 DESIGN's written permission.

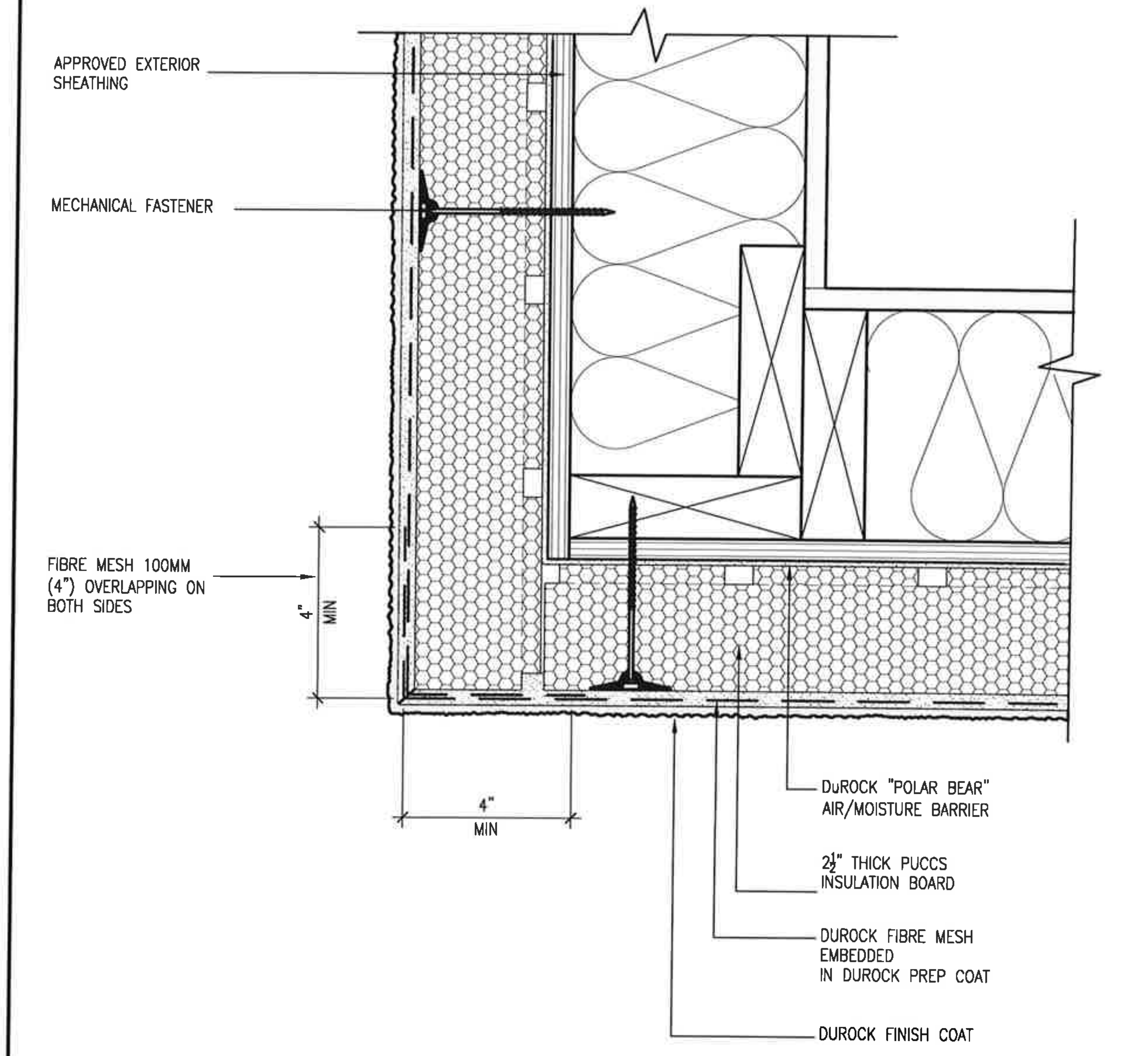

5 / CN5 — CORNER DETAIL

SCALE: 3"=1'-0"

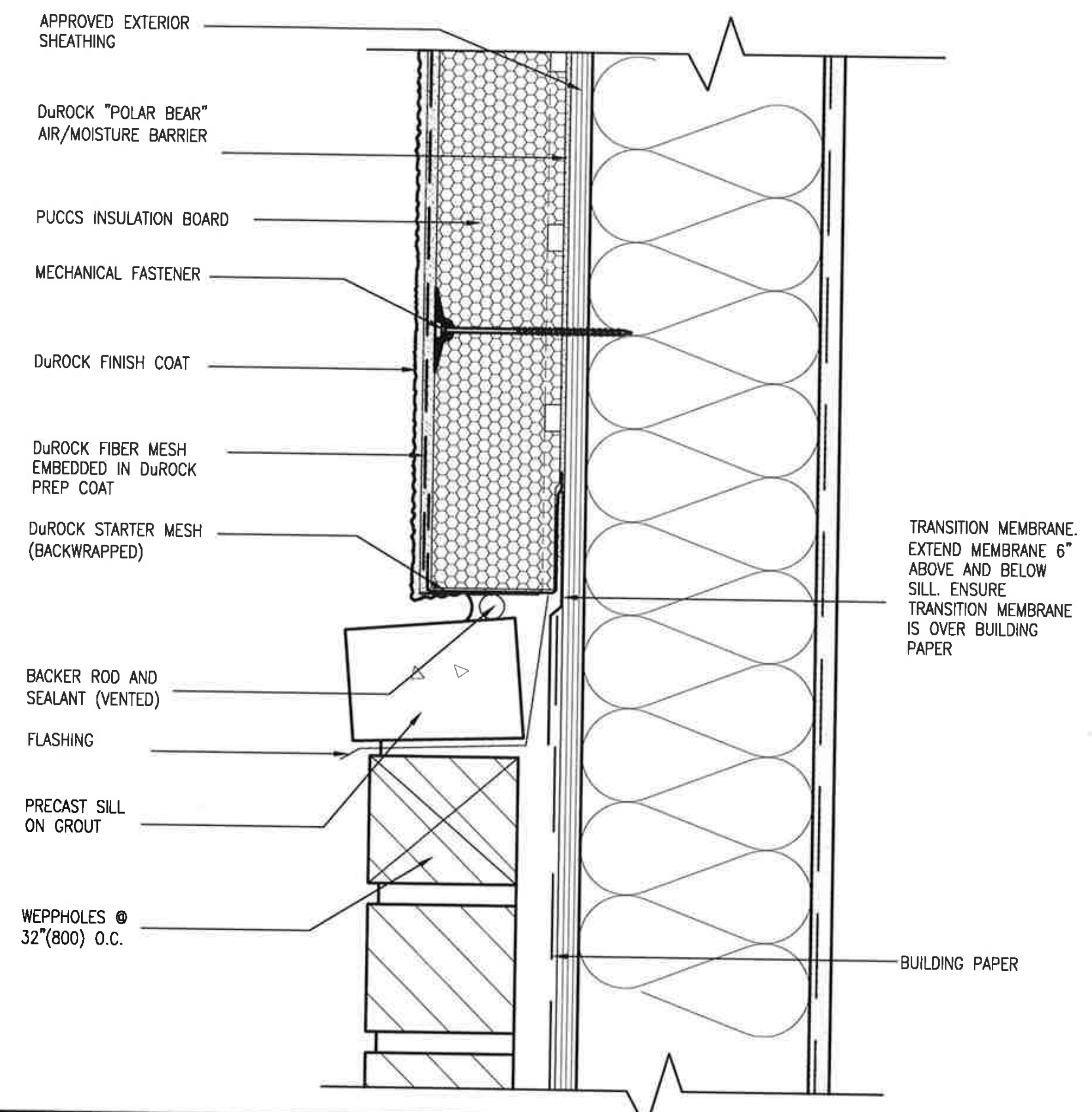

6 / CN5 — STUCCO / MASONRY PLINTH CONNECTION

SCALE: 3"=1'-0"

ALL STUCCO WALLS TO HAVE A MINIMUM 10mm AIR SPACE BEHIND THE CLADDING WITH POSITIVE DRAINAGE TO THE EXTERIOR. THE EXTERIOR SHEATHING MUST NOT BE GYPSUM BASED. ALL STUCCO TO BE INSTALLED AS PER MANUFACTURERS SPECIFICATIONS.
DETAILS ARE BASED ON DuROCK PUCCS SYSTEM

no.	description	date	by
1	ISSUE FOR CLIENT REVIEW	AUG 04-17	RC
2	UPDATE TO OBC VER 2020	FEB 09-21	RC
3			
4			
5			
6			
7			
8			
9			

The undersigned has reviewed and takes responsibility for this design and has the qualifications and meets the requirements set out in the Ontario Building Code to be a Designer.
qualification information: Wellington Jno-Baptiste — BCIN 25591
registration information: VA3 Design Inc. — 42658

Contractor must verify all dimensions on the job and report any discrepancy to the Designer before proceeding with the work. All drawings and specifications are instruments of service and the property of the Designer which must be returned at the completion of the work. Drawings are not to be scaled.

VA3 DESIGN
255 Consumers Rd Suite 120
Toronto ON M2J 1R4
t 416.630.2255 f 416.630.4782
va3design.com

BAYVIEW WELLINGTON — CONST NOTE

project name: ALCONA — municipality: INNISFIL,ON. — project no. 13049
date: MAY 2016 — drawn by: RC — checked by: - — scale: 3/16" = 1'-0"
CONSTRUCTION NOTES — file name: 13049-CN-A1 VER 2020 — drawing no. CN5

All drawings specifications, related documents and design are the copyright property of VA3 DESIGN. Reproduction of this property in whole or in part is strictly prohibited without VA3 DESIGN's written permission.

SB12–COMPLIANCE PACKAGE 'A1'

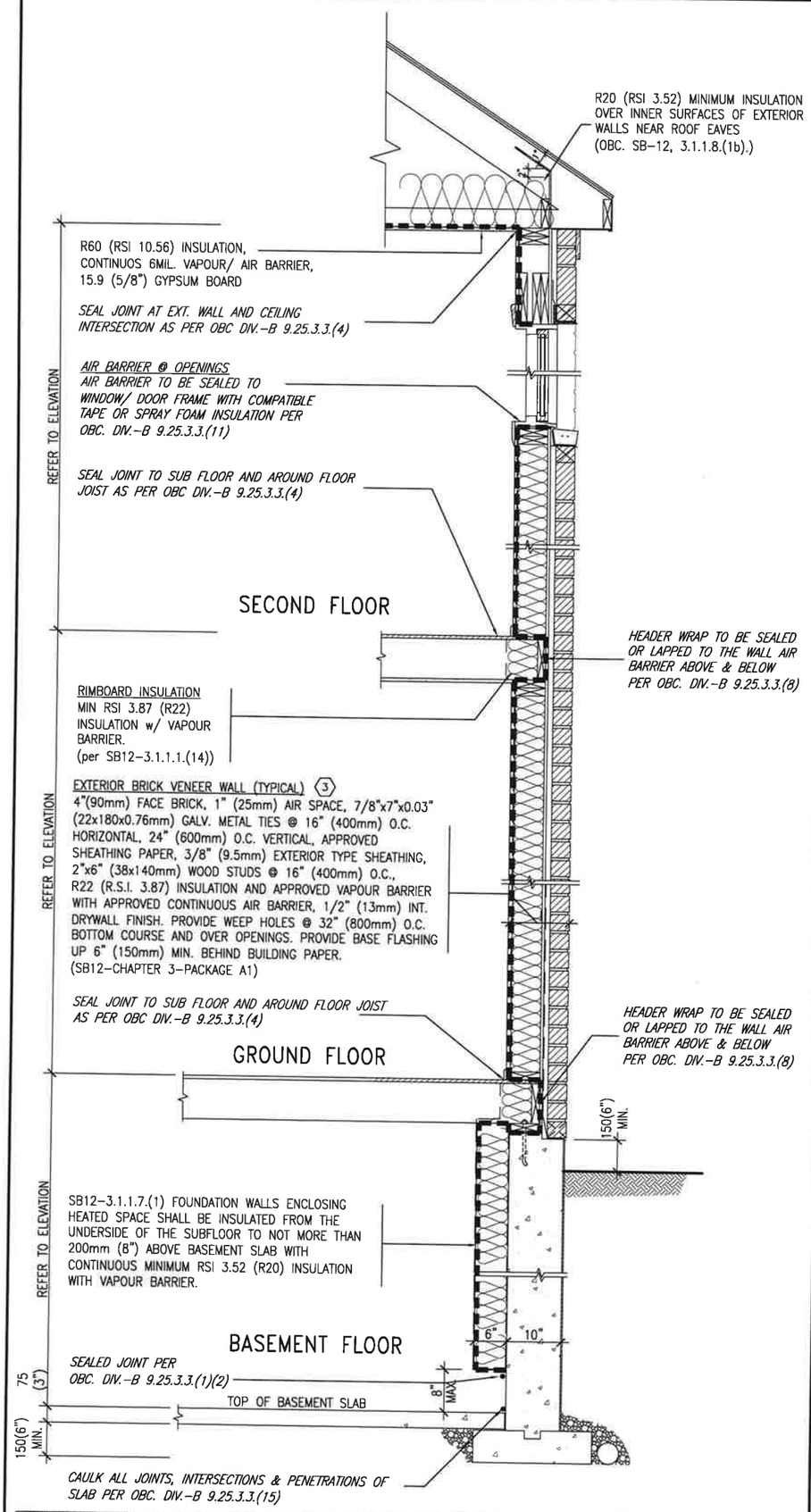

INSULATION REQUIREMENTS
REFER TO OBC SB–12, CHAPTER 3.
ZONE 1– COMPLIANCE PACKAGE A1.

AIR BARRIER SYSTEMS
AIR BARRIER TO BE INSTALLED IN CONFORMANCE WITH OBC. DIV. B–9.25.3

REFER TO ADDITIONAL DETAILS FOR STRUCTURAL COMPONENTS

EW TYPICAL EXT. WALL AIR BARRIER CONTINUITY SECTION w/ BRICK VENEER (PACKAGE A1) 10" FOUNDATION WALL

SCALE: N.T.S.

THE MINIMAL THERMAL PERFORMANCE OF BUILDING ENVELOPE AND EQUIPMENT SHALL CONFORM TO THE FOLLOWING SB–12 COMPLIANCE PACKAGE AS PER OBC SUPPLEMENTARY STANDARD SB–12, SECTION 3.1.1.1.

USE SB–12 COMPLIANCE PACKAGE (A1):

COMPONENT	A1	Notes:
Ceiling with Attic Space Minimum RSI (R) value	10.56 (R60)	R20 at inner face of exterior walls
Ceiling without Attic Space Minimum RSI (R) value	5.46 (R31)	BATT or SPRAY
Exposed FLoor Minimum RSI (R) value	5.46 (R31)	BATT or SPRAY
Walls Above Grade Minimum RSI (R) value	3.87 (R22)	6" R22 BATT
Basement Walls Minimum RSI (R) value	3.52ci (R20ci)	OPTION TO USE R12+R10ci.
Edge of Below Grade Slab ≤600mm below grade Minimum RSI (R) value	1.76 (R10)	RIGID INSUL
Windows & Sliding glass Doors Maximum U–value	1.6	
Skylights Maximum U–value	2.8U	
Space Heating Equipment Minimum AFUE	96% Min.	NATURAL GAS
Hot Water Heater Minimum EF	0.8	NATURAL GAS
HRV Minimum Efficiency	75%	–
Drain Water Heat Recovery Unit (DWHR)	Minimum 1 OR Maximum 2 Required. Dependent on number of showers installed. Refer to SB12–3.1.1.12 for information	

ci– Denotes Continuous Insulation without framing interruption.

LICENSED PROFESSIONAL ENGINEER S. J. BOYD 90214198 PROVINCE OF ONTARIO

FEB 9, 2021

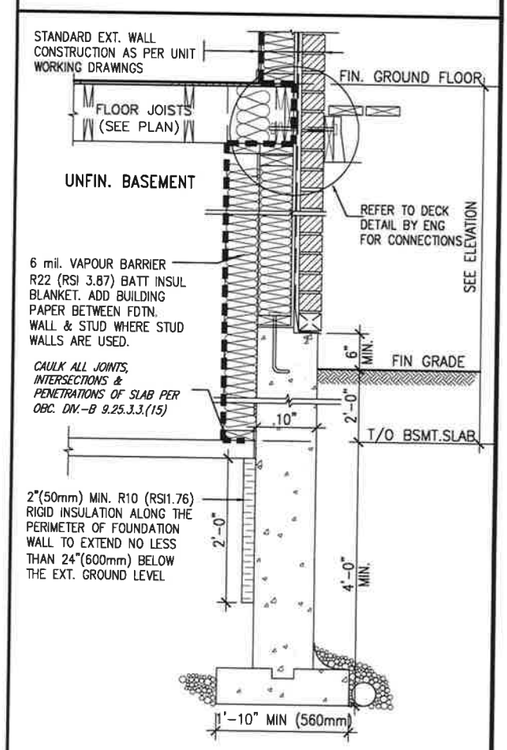

* REVISED–FEB 2017

SECTION AT W.O.D/W.O.B.

no.	description	date	by
9	.	.	.
8	.	.	.
7	.	.	.
6	.	.	.
5	.	.	.
4	.	.	.
3	.	.	.
2	UPDATE TO OBC VER 2020	FEB 09–21	RC
1	ISSUE FOR CLIENT REVIEW	AUG 04–17	RC

The undersigned has reviewed and takes responsibility for this design and has the qualifications and meets the requirements set out in the Ontario Building Code to be a Designer.
qualification information
Wellington Jno–Baptiste — signature — BCIN 25591
name — VA3 Design Inc.
registration information — 42658

Contractor must verify all dimensions on the job and report any discrepancy to the Designer before proceeding with the work. All drawings and specifications are instruments of service and the property of the Designer which must be returned at the completion of the work. Drawings are not to be scaled.

VA3 DESIGN
255 Consumers Rd Suite 120
Toronto ON M2J 1R4
t 416.630.2255 f 416.630.4782
va3design.com

BAYVIEW WELLINGTON

CONST NOTE –

project name: ALCONA
municipality: INNISFIL,ON.
project no.: 13049
date: MAY 2016
drawn by: RC
checked by: –
scale: 3/16" = 1'–0"
CONSTRUCTION NOTES
file name: 13049–CN–A1 VER 2020
drawing no.: CN6

RICHARD – H:\ARCHIVE\WORKING\2013\13049.BW\UNITS\CN Notes\13049–CN–A1 VER 2020.dwg – Tue – Feb 9 2021 – 11:18 AM

All drawings specifications, related documents and design are the copyright property of VA3 DESIGN. Reproduction of this property in whole or in part is strictly prohibited without VA3 DESIGN's written permission.

SB12-COMPLIANCE PACKAGE 'A1'

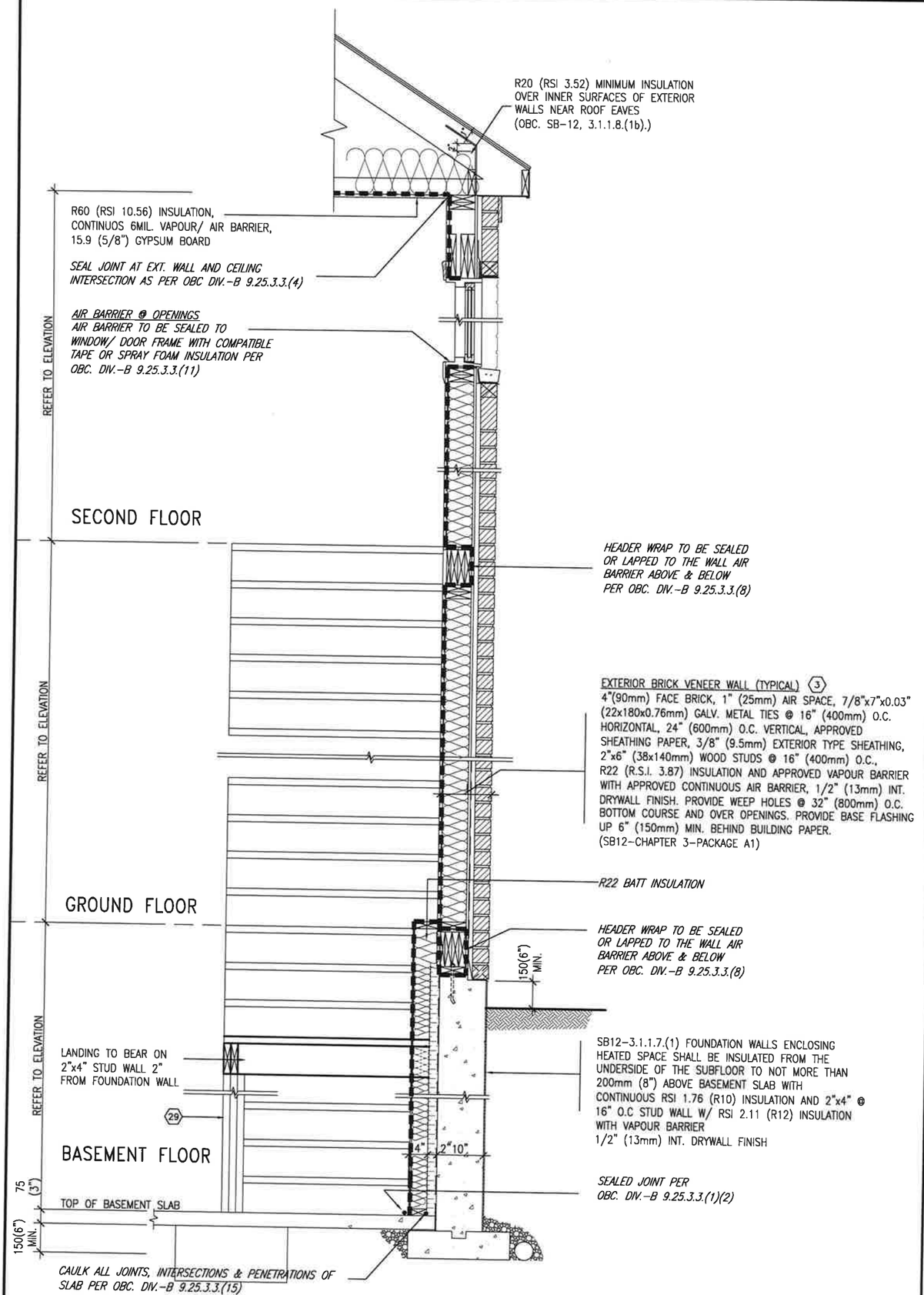

INSULATION REQUIREMENTS
REFER TO OBC SB-12, CHAPTER 3.
ZONE 1- COMPLIANCE PACKAGE A1.

AIR BARRIER SYSTEMS
AIR BARRIER TO BE INSTALLED IN CONFORMANCE WITH OBC. DIV. B-9.25.3

REFER TO ADDITIONAL DETAILS FOR STRUCTURAL COMPONENTS

EW / STR

TYPICAL EXT. WALL AIR BARRIER CONTINUITY SECTION w/ BRICK VENEER AT STAIR AND SUNKEN COND (PACKAGE A1) 10" FOUNDATION WALL

SCALE: N.T.S.

LICENSED PROFESSIONAL ENGINEER S. J. BOYD 90214198 PROVINCE OF ONTARIO

FEB 9, 2021

no.	description	date	by
9	.	.	.
8	.	.	.
7	.	.	.
6	.	.	.
5	.	.	.
4	.	.	.
3	.	.	.
2	UPDATE TO OBC VER 2020	FEB 09-21	RC
1	ISSUE FOR CLIENT REVIEW	AUG 04-17	RC

The undersigned has reviewed and takes responsibility for this design and has the qualifications and meets the requirements set out in the Ontario Building Code to be a Designer.
qualification information
Wellington Jno-Baptiste — signature — 25591 BCIN
name — registration information
VA3 Design Inc. — 42658

Contractor must verify all dimensions on the job and report any discrepancy to the Designer before proceeding with the work. All drawings and specifications are instruments of service and the property of the Designer which must be returned at the completion of the work. Drawings are not to be scaled.

VA3 DESIGN
255 Consumers Rd Suite 120
Toronto ON M2J 1R4
t 416.630.2255 f 416.630.4782
va3design.com

BAYVIEW WELLINGTON

CONST NOTE -

project name: ALCONA — municipality: INNISFIL,ON. — project no. 13049

date: MAY 2016 — CONSTRUCTION NOTES — drawing no. CN7

drawn by: RC — checked by: - — scale: 3/16" = 1'-0" — file name: 13049-CN-A1 VER 2020

RICHARD - H:\ARCHIVE\WORKING\2013\13049.BW\UNITS\CN Notes\13049-CN-A1 VER 2020.dwg - Tue - Feb 9 2021 - 11:18 AM

All drawings specifications, related documents and design are the copyright property of VA3 DESIGN. Reproduction of this property in whole or in part is strictly prohibited without VA3 DESIGN's written permission.

COMPLIANCE TO OBC SB-12 2.1.1.1(11)

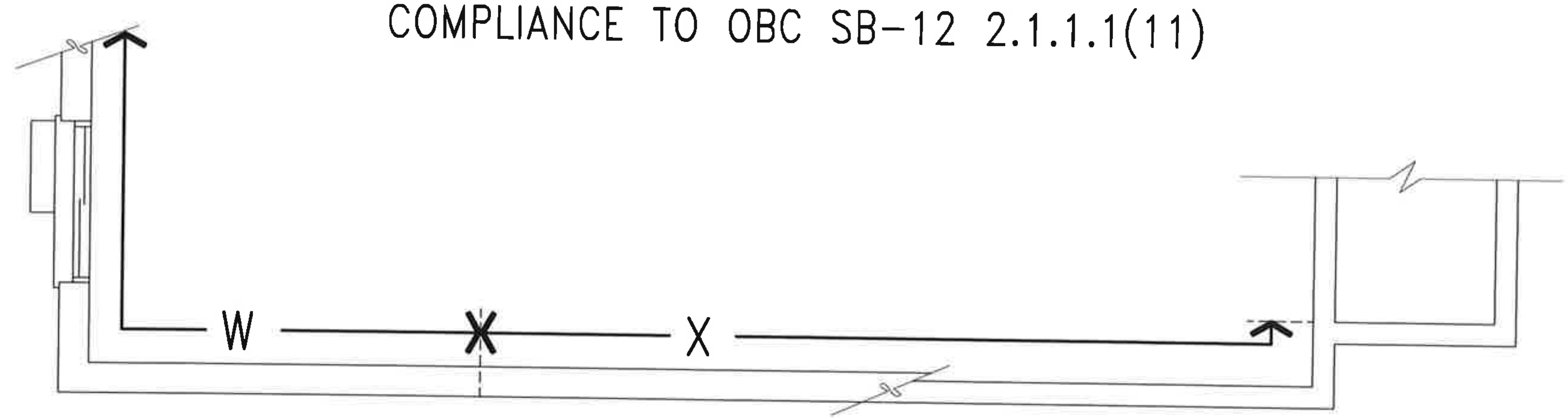

WOB PLAN

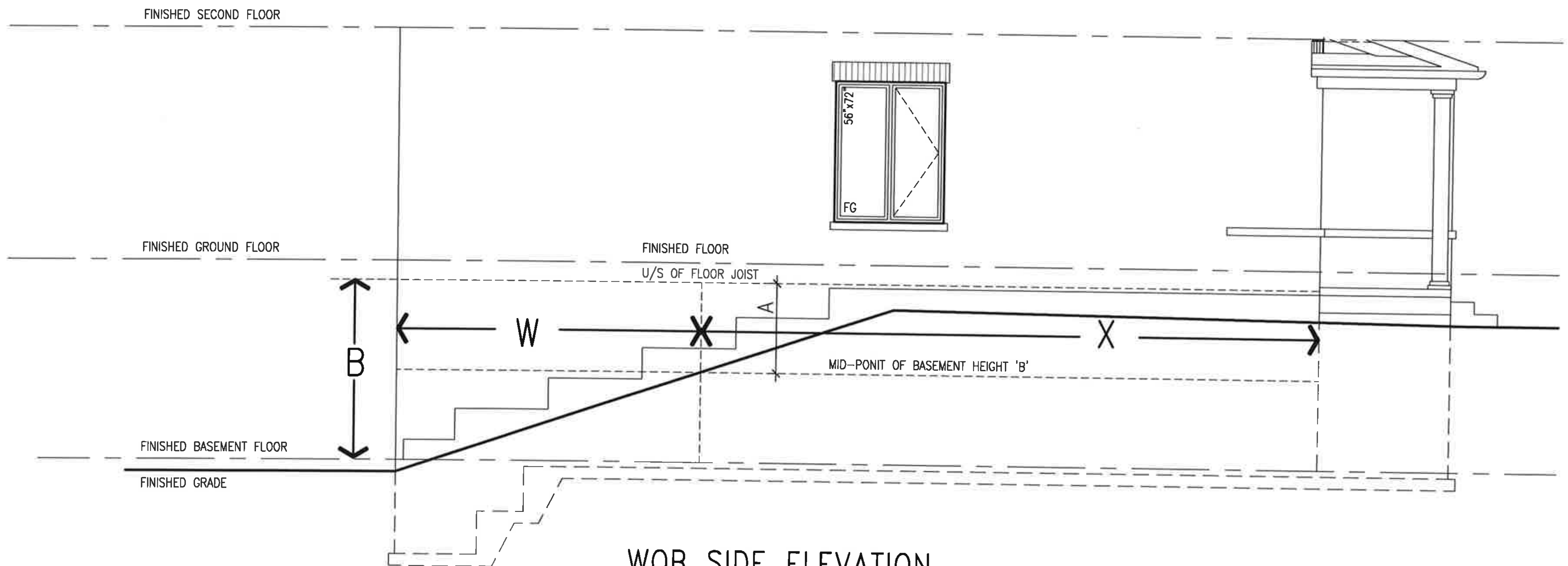

WOB SIDE ELEVATION

<u>WHEN EXPOSED WALL "A" IS GREATER THAN 50% OF BASEMENT WALL HEIGHT "B"</u>
INSULATION VALUE FOR WALL IN SECTION "W" IS NOT LESS THAN IS REQUIRED FOR ABOVE GRADE WALL AS REQUIRED BY TABLE 2.1.1.2A

<u>WHEN EXPOSED WALL "A" IS LESS THAN 50% OF BASEMENT WALL HEIGHT "B"</u>
INSULATION VALUE FOR WALL IN SECTION "X" IS NOT LESS THAN BASEMENT WALL AS REQUIRED BY TABLE 2.1.1.2A

LICENSED PROFESSIONAL ENGINEER S. J. BOYD 90214198 PROVINCE OF ONTARIO

FEB 9, 2021

no.	description	date	by
9	.	.	.
8	.	.	.
7	.	.	.
6	.	.	.
5	.	.	.
4	.	.	.
3	.	.	.
2	UPDATE TO OBC VER 2020	FEB 09-21	RC
1	ISSUE FOR CLIENT REVIEW	AUG 04-17	RC

The undersigned has reviewed and takes responsibility for this design and has the qualifications and meets the requirements set out in the Ontario Building Code to be a Designer.

qualification information
Wellington Jno-Baptiste — signature — BCIN 25591
name
registration information
VA3 Design Inc. — 42658

Contractor must verify all dimensions on the job and report any discrepancy to the Designer before proceeding with the work. All drawings and specifications are instruments of service and the property of the Designer which must be returned at the completion of the work. Drawings are not to be scaled.

VA3 DESIGN
255 Consumers Rd Suite 120
Toronto ON M2J 1R4
t 416.630.2255 f 416.630.4782
va3design.com

BAYVIEW WELLINGTON

project name: ALCONA
municipality: INNISFIL,ON.

CONST NOTE

\-

project no. 13049

date: MAY 2016
drawn by: RC
checked by: -
scale: 3/16" = 1'-0"

CONSTRUCTION NOTES
file name: 13049-CN-A1 VER 2020

drawing no. CN8

RICHARD - H:\ARCHIVE\WORKING\2013\13049 BW\UNITS\CN Notes\13049-CN-A1 VER 2020.dwg - Tue - Feb 9 2021 - 11:15 AM

All drawings specifications, related documents and design are the copyright property of VA3 DESIGN. Reproduction of this property in whole or in part is strictly prohibited without VA3 DESIGN's written permission.

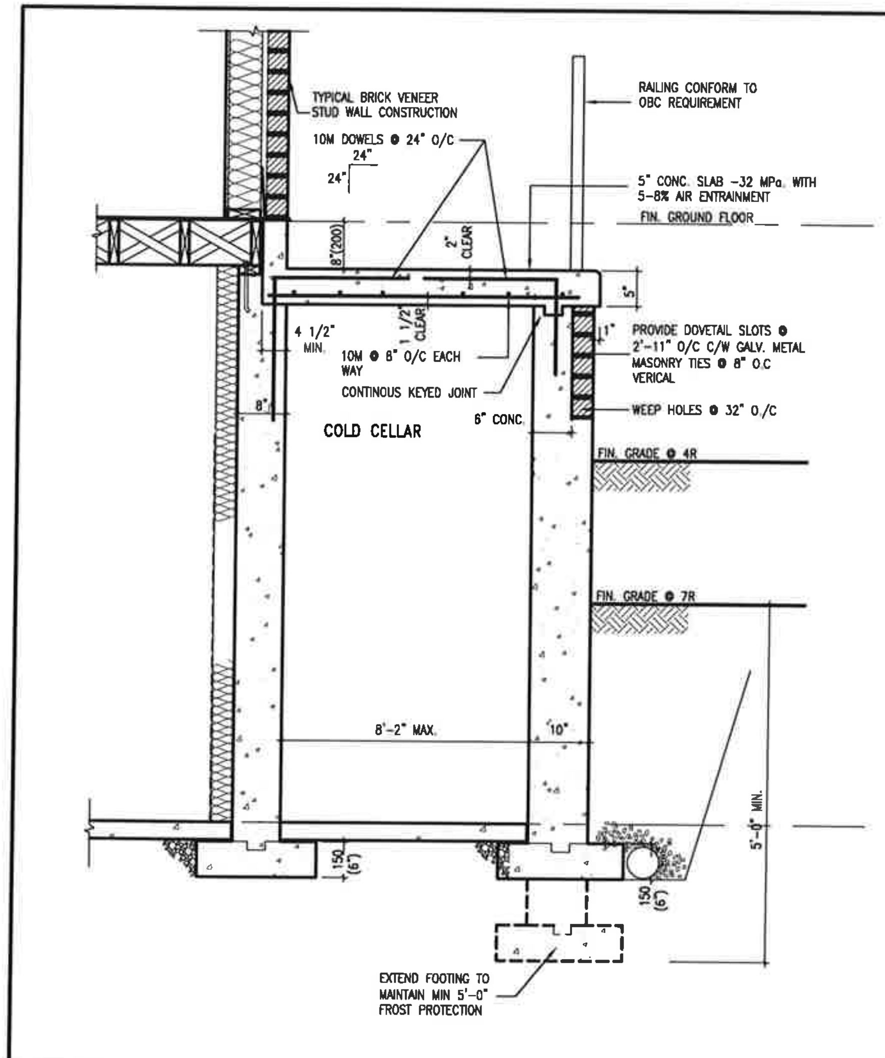

X1 SECTION AT PORCH FOR 4-7R CONDITION

SCALE: N.T.S.

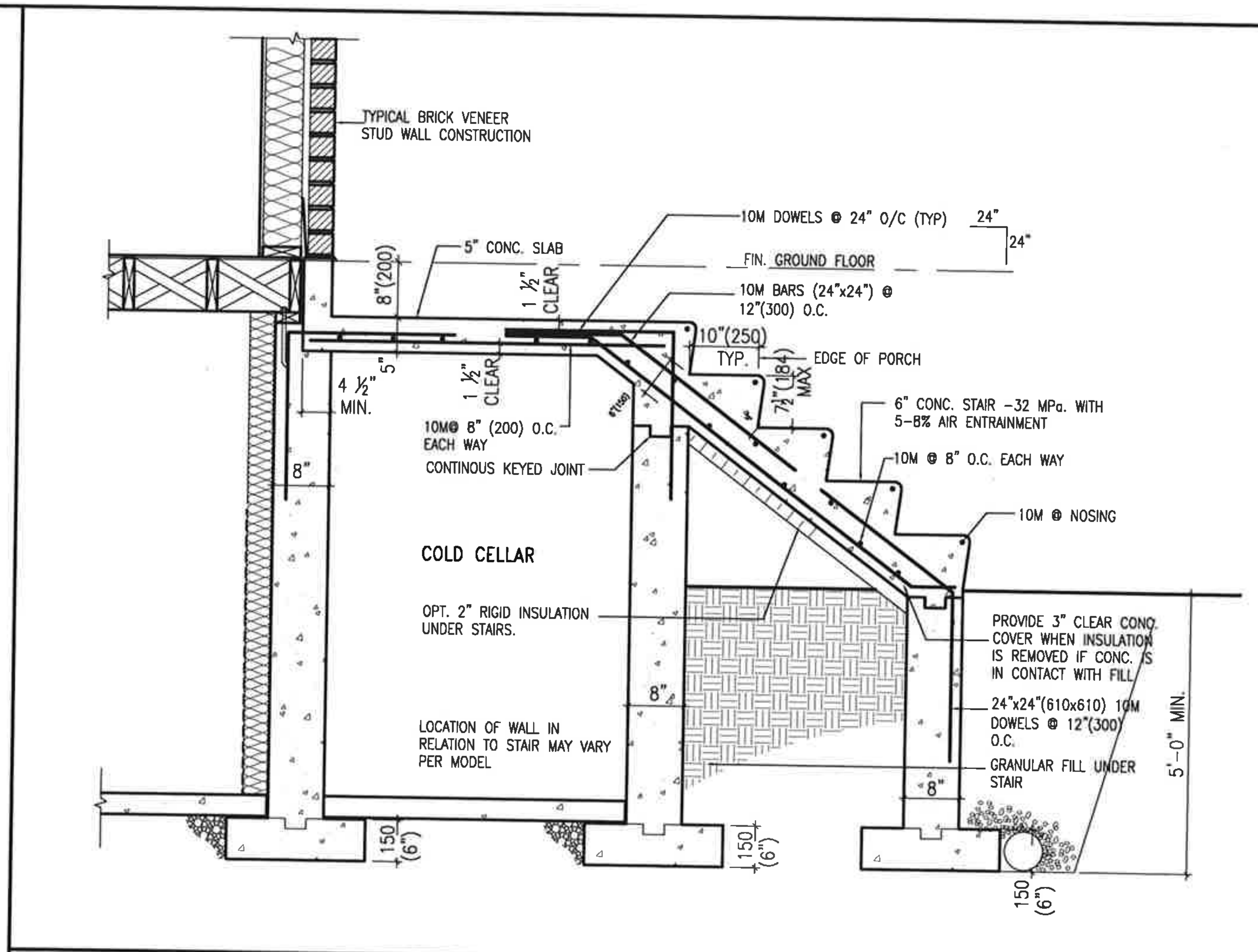

X2 EXTERIOR CONC. STAIR DETAIL (6 RISERS/ 7 RISERS SIMILAR)

SCALE: N.T.S.

LICENSED PROFESSIONAL ENGINEER S.J. BOYD 90214198 PROVINCE OF ONTARIO

FEB 9, 2021

no.	description	date	by
1	ISSUE FOR CLIENT REVIEW	AUG 04-17	RC
2	UPDATE TO OBC VER 2020	FEB 09-21	RC
3			
4			
5			
6			
7			
8			
9			

The undersigned has reviewed and takes responsibility for this design and has the qualifications and meets the requirements set out in the Ontario Building Code to be a Designer.

qualification information: Wellington Jno-Baptiste, BCIN 25591

registration information: VA3 Design Inc., 42658

Contractor must verify all dimensions on the job and report any discrepancy to the Designer before proceeding with the work. All drawings and specifications are instruments of service and the property of the Designer which must be returned at the completion of the work. Drawings are not to be scaled.

VA3 DESIGN
255 Consumers Rd Suite 120
Toronto ON M2J 1R4
t 416.630.2255 f 416.630.4782
va3design.com

BAYVIEW WELLINGTON

CONST NOTE

project name: ALCONA
municipality: INNISFIL,ON.
date: MAY 2016
drawn by: RC
checked by: -
scale: 3/16" = 1'-0"
CONSTRUCTION NOTES
file name: 13049-CN-A1 VER 2020
project no.: 13049
drawing no.: CN9

All drawings specifications, related documents and design are the copyright property of VA3 DESIGN. Reproduction of this property in whole or in part is strictly prohibited without VA3 DESIGN's written permission.

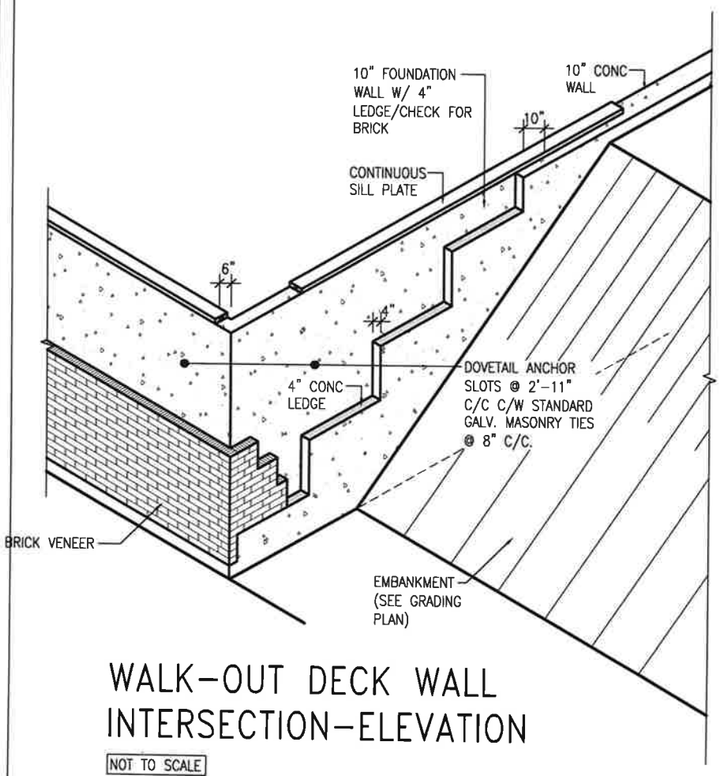

WALK-OUT DECK WALL INTERSECTION-ELEVATION

NOT TO SCALE

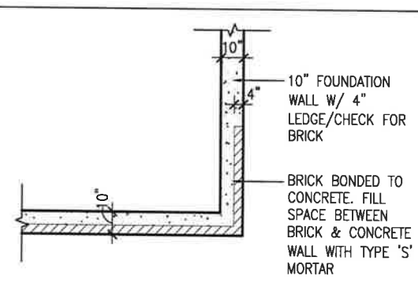

WALK-OUT DECK WALL INTERSECTION-PLAN

NOT TO SCALE

(10" FOUNDATION WALL)

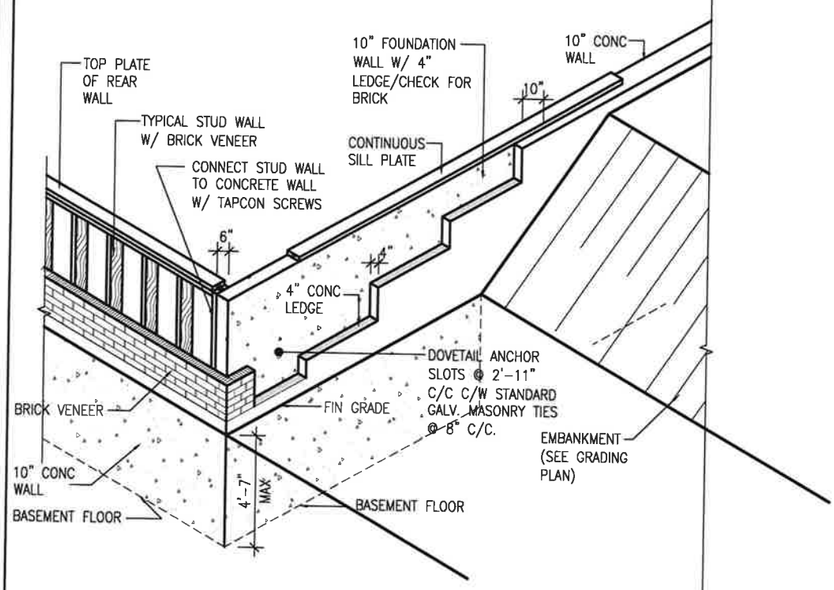

WALK-OUT DECK WALL INTERSECTION-ELEVATION MAX 4'-7" BACKFILL

NOT TO SCALE

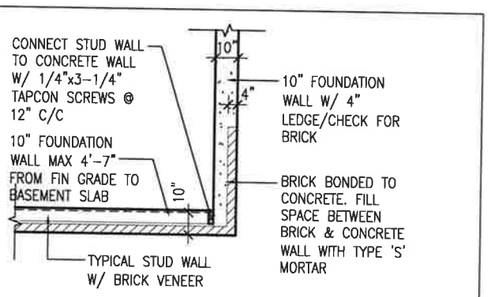

WALK-OUT BASEMENT WALL INTERSECTION-PLAN

NOT TO SCALE

(10" FOUNDATION WALL)

LICENSED PROFESSIONAL ENGINEER
S. J. BOYD
90214198
PROVINCE OF ONTARIO

FEB 9, 2021

no.	description	date	by
9	.	.	.
8	.	.	.
7	.	.	.
6	.	.	.
5	.	.	.
4	.	.	.
3	.	.	.
2	UPDATE TO OBC VER 2020	FEB 09-21	RC
1	ISSUE FOR CLIENT REVIEW	AUG 04-17	RC

The undersigned has reviewed and takes responsibility for this design and has the qualifications and meets the requirements set out in the Ontario Building Code to be a Designer.

qualification information

name: Wellington Jno-Baptiste — signature — registration information: 25591 BCIN

VA3 Design Inc. — 42658

Contractor must verify all dimensions on the job and report any discrepancy to the Designer before proceeding with the work. All drawings and specifications are instruments of service and the property of the Designer which must be returned at the completion of the work. Drawings are not to be scaled.

VA3 DESIGN
255 Consumers Rd Suite 120
Toronto ON M2J 1R4
t 416.630.2255 f 416.630.4782
va3design.com

BAYVIEW WELLINGTON

CONST NOTE -

project name: ALCONA — municipality: INNISFIL,ON. — project no. 13049

date: MAY 2016 — CONSTRUCTION NOTES — drawing no. CN10

drawn by: RC — checked by: – — scale: 3/16" = 1'-0" — file name: 13049-CN-A1 VER 2020

RICHARD - H:\ARCHIVE\WORKING\2013\13049 BW\UNITS\CN Notes\13049-CN-A1 VER 2020.dwg - Tue - Feb 9 2021 - 11:16 AM

All drawings specifications, related documents and design are the copyright property of VA3 DESIGN. Reproduction of this property in whole or in part is strictly prohibited without VA3 DESIGN's written permission.

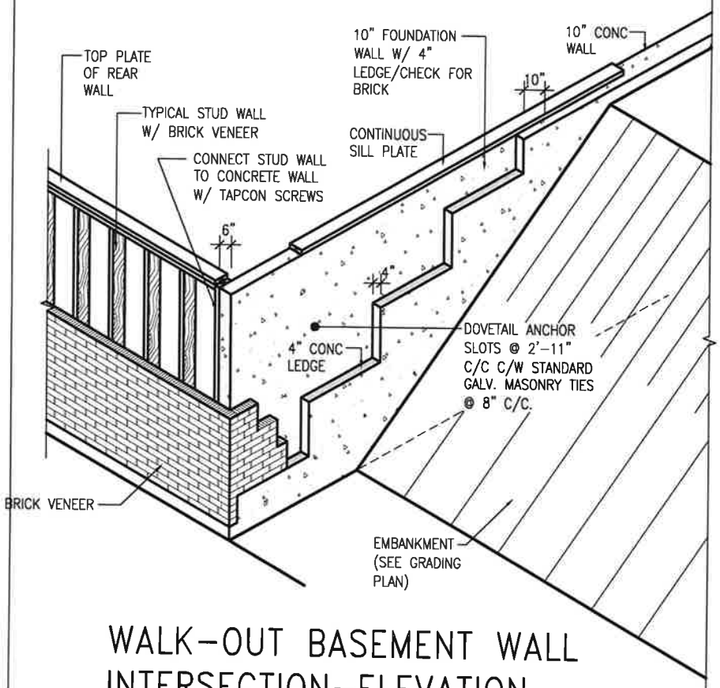

WALK-OUT BASEMENT WALL INTERSECTION-ELEVATION

NOT TO SCALE

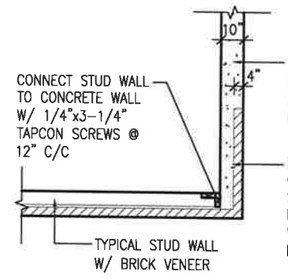

WALK-OUT BASEMENT WALL INTERSECTION-PLAN

NOT TO SCALE

(10" FOUNDATION WALL)

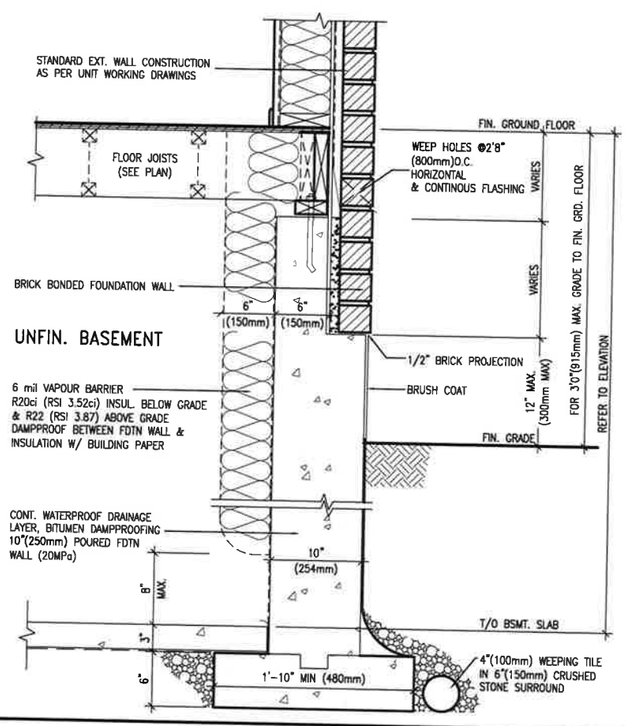

EW3.06x
PKG A1

WALL SECTION FOR GRADE TO FIN. FLOOR MORE THAN 4'7" (1400mm) HEIGHT DIFFERENCE

SCALE: N.T.S.

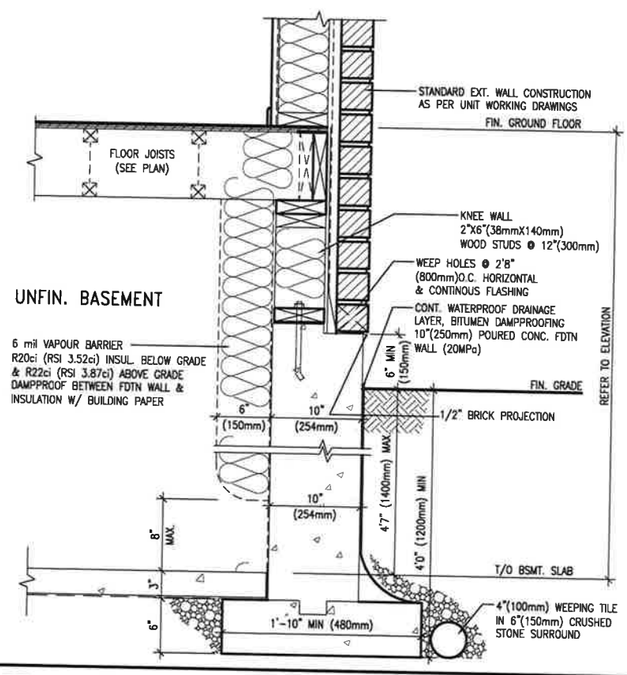

EW3.07x
PKG A1

WALL SECTION FOR GRADE TO BASEMENT SLAB 4'7"(1400mm) MAX. HEIGHT DIFFERENCE

SCALE: N.T.S.

LICENSED PROFESSIONAL ENGINEER
S. J. BOYD
90214198
PROVINCE OF ONTARIO

FEB 9, 2021

no.	description	date	by
9	.	.	.
8	.	.	.
7	.	.	.
6	.	.	.
5	.	.	.
4	.	.	.
3	.	.	.
2	UPDATE TO OBC VER 2020	FEB 09-21	RC
1	ISSUE FOR CLIENT REVIEW	AUG 04-17	RC

The undersigned has reviewed and takes responsibility for this design and has the qualifications and meets the requirements set out in the Ontario Building Code to be a Designer.
qualification information
Wellington Jno-Baptiste — signature — 25591
name — BCIN
registration information
VA3 Design Inc. — 42658

Contractor must verify all dimensions on the job and report any discrepancy to the Designer before proceeding with the work. All drawings and specifications are instruments of service and the property of the Designer which must be returned at the completion of the work. Drawings are not to be scaled.

VA3 DESIGN
255 Consumers Rd Suite 120
Toronto ON M2J 1R4
t 416.630.2255 f 416.630.4782
va3design.com

BAYVIEW WELLINGTON

CONST NOTE
-

project name: ALCONA
municipality: INNISFIL,ON.
project no.: 13049
date: MAY 2016
CONSTRUCTION NOTES
drawn by: RC
checked by: -
scale: 3/16" = 1'-0"
file name: 13049-CN-A1 VER 2020
drawing no.: CN11

RICHARD - H:\ARCHIVE\WORKING\2013\13049 BW\UNITS\CN Notes\13049-CN-A1 VER 2020.dwg - Tue - Feb 9 2021 - 11:16 AM

All drawings specifications, related documents and design are the copyright property of VA3 DESIGN. Reproduction of this property in whole or in part is strictly prohibited without VA3 DESIGN's written permission.