ALL CONVENTIONAL ROOF FRAMING TO CONFORM TO PART9 OF THE OBC.LATEST EDITION
ROOF RAFTERS THAT MEET OR CROSS OVER TRUSSES ARE TO BE 2"X4"SPF@24"o.c.
WITH A 2"X4"SPF VERTICAL POST TO THE TRUSS UNDER AT EACH CROSS POINT.
POSTS LONGER THAN 6' TO BE LATERALLY BRACED SO THAT THE DISTANCE
BETWEEN END POINTS AND BETWEEN ROWS OF BRACING DOES NOT EXCEED 6'.

**ASPHALT SHINGLES**
**12" FINISHED OH.**
**R.T.M.C.**
**2X6 EXTERIOR WALLS**
**2X6 FASCIA BOARD**

DESIGN LOADS:

SNOW LOAD 21.0 psf
TC DEAD 6 PSF
BC LIVE 10.5 PSF
BC DEAD 7 PSF

**DENOTES:**

**ALL B -2-2X10 FLUSH**

**HARDWARE:**

**LUS26-2 -(X)**
**LJS26DS -(V)**
**LUS24 -(O)**

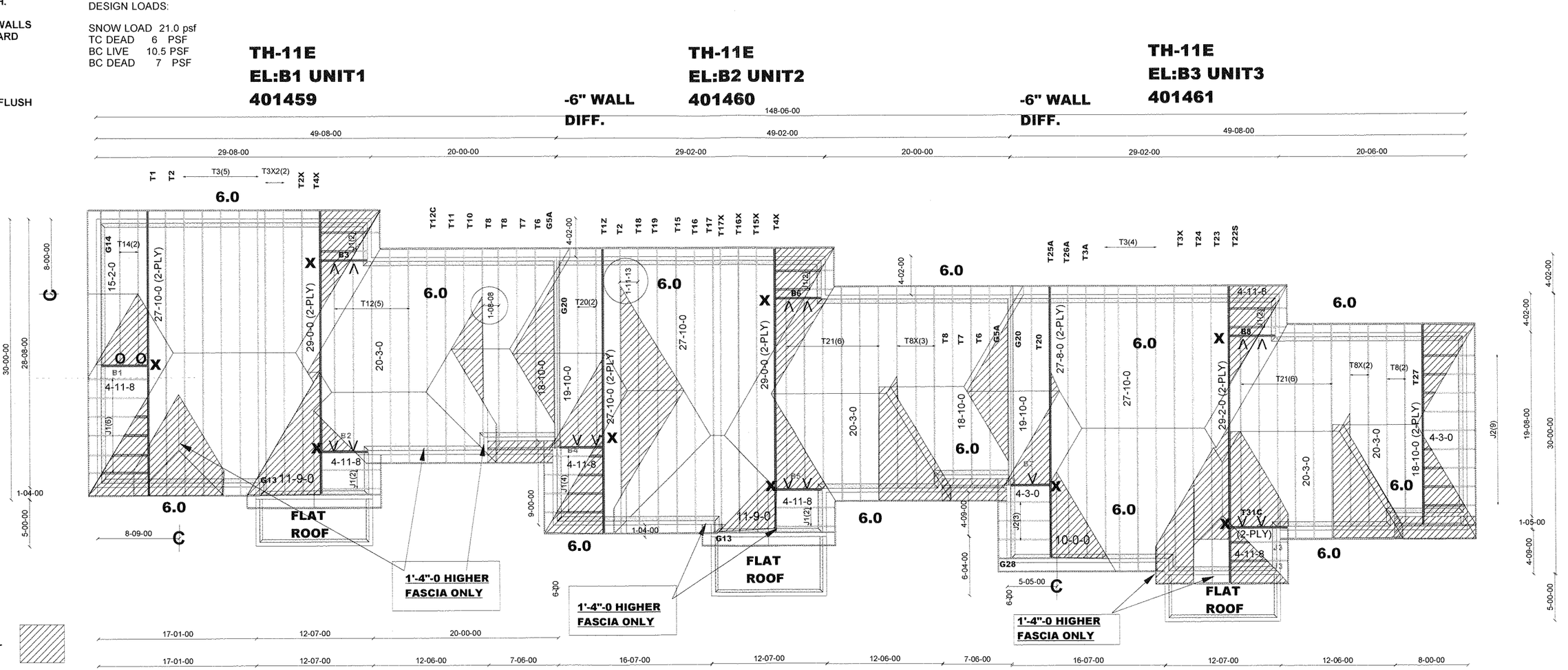


**T-180690**

**DENOTES:**
**CONVENTIONAL FRAMING**

| | | | |
|---|---|---|---|
| TAMARACK LUMBER INC. / ALPA LUMBER GROUP | Job Track: 50264 | Builder / Location: BAYVIEW WELLINGTON / ST. CATHERINES | Model / Elevation: CONDO BLOCK 1 / UNITS 1- 3 |
| | Plan Log: 200538 | Project: PASSAGE ON THE CANAL | Mitek ver 8.2.3.229 |
| | Layout ID: 401458 | Date: 2/15/2019 Sales: Mario DiCano Designer: AC | THESE DRAWINGS CONSTITUTE THE PROPERTY OF TAMARACK ROOF TRUSSES INC., SHALL NOT BE REPRODUCED, PUBLISHED, OR REDISTRIBUTED IN ANY MANNER OR UTILIZED FOR ANY PURPOSE OTHER THAN THE MANUFACTURE OF TRUSSES BY TAMARACK ROOF TRUSSES INC AND WILL BE RETRACTED BY TAMARACK ROOF TRUSSES INC IF UTLILZED FOR ANY OTHER PURPOSE. |

# DELIVERY SHIPLIST

| | | | |
|---|---|---|---|
| Lumber Yard: | TAMARACK LUMBER | Job Track: | 50264 |
| Builder: | BAYVIEW WELLINGTON / | PlanLog: | 200538 |
| Project: | PASSAGE ON THE CANAL | Layout ID: | 401459 |
| Location: | ST CATHERINES | Ref # | |
| Model: | TH-11E | Page: | 1 of 2 |
| Lot #: | | Date: | 02/15/2019 |
| Elevation: | B1 UNIT 1 | Designer: | Andrew Conway |
| | | Sales Rep: | Mario DiCano |

## *Roof Trusses*

| PROFILE | QTY<br>PLY | MARK<br>TYPE | PITCH | SPAN | HEIGHT | LUMBER | OVERHANG<br>LEFT<br>RIGHT | HEEL HEIGHT<br>LEFT<br>RIGHT | LBS.<br>BFT. | BUNDLE #<br>STACK # | LOAD BY<br>REMARKS |
|---|---|---|---|---|---|---|---|---|---|---|---|
| | 1<br>2-ply | T1<br>Hip Girder | 6 /12 | 27-10-00 | 5-09-04 | 2 x 4<br>2 x 6 | 1-03-08<br>1-03-08 | 1-02-00<br>1-02-00 | 265.81<br>168.00 | | |
| | 1 | T2<br>Hip | 6 /12 | 27-10-00 | 7-05-04 | 2 x 4 | 1-03-08<br>1-03-08 | 1-02-00<br>1-02-00 | 116.76<br>73.33 | | |
| | 1 | T2X<br>Hip | 6 /12 | 29-00-00 | 7-05-04 | 2 x 4 | 1-03-08 | 1-02-00<br>7-00 | 113.88<br>71.50 | | |
| | 5 | T3<br>Common | 6 /12 | 27-10-00 | 8-01-08 | 2 x 4 | 1-03-08<br>1-03-08 | 1-02-00<br>1-02-00 | 544.73<br>340.00 | | |
| | 2 | T3X2<br>Common | 6 /12 | 29-00-00 | 8-01-08 | 2 x 4 | 1-03-08 | 1-02-00<br>7-00 | 211.02<br>132.33 | | |
| | 1<br>2-ply | T4X<br>Half Hip<br>Girder | 6 /12 | 29-00-00 | 5-09-04 | 2 x 4<br>2 x 6 | 1-03-08 | 1-02-00<br>5-09-04 | 287.07<br>181.33 | | |
| | 1 | G5A<br>GABLE | 6 /12 | 18-10-00 | 5-07-08 | 2 x 4 | 1-03-08 | 8-00<br>1-02-00 | 69.51<br>48.67 | | |
| | 1 | T6<br>Hip | 6 /12 | 18-10-00 | 3-05-12 | 2 x 4 | 1-03-08<br>1-03-08 | 1-02-00<br>1-02-00 | 72.33<br>45.50 | | |
| | 1 | T7<br>Hip | 6 /12 | 18-10-00 | 5-01-12 | 2 x 4 | 1-03-08<br>1-03-08 | 1-02-00<br>1-02-00 | 77.1<br>48.67 | | |
| | 2 | T8<br>Common | 6 /12 | 18-10-00 | 5-10-08 | 2 x 4 | 1-03-08<br>1-03-08 | 1-02-00<br>1-02-00 | 149.34<br>96.67 | | |
| | 1 | T10<br>Roof Special | 6 /12 | 20-03-00 | 4-07-11 | 2 x 4 | 1-03-08<br>1-03-08 | 1-02-00<br>2-11-11 | 85.49<br>56.33 | | |
| | 1 | T11<br>Roof Special | 6 /12 | 20-03-00 | 6-03-11 | 2 x 4 | 1-03-08<br>1-03-08 | 1-02-00<br>2-11-11 | 87.54<br>55.33 | | |
| | 5 | T12<br>Roof Special | 6 /12 | 20-03-00 | 8-02-01 | 2 x 4 | 1-03-08<br>1-03-08 | 1-02-00<br>2-11-11 | 422.83<br>267.50 | | |
| | 1 | T12C<br>Roof Special | 6 /12 | 20-03-00 | 7-11-11 | 2 x 4 | 1-03-08<br>1-03-08 | 1-02-00<br>2-11-11 | 84.32<br>52.83 | | |

# DELIVERY SHIPLIST

| | | | |
|---|---|---|---|
| Lumber Yard: | TAMARACK LUMBER | Job Track: | 50264 |
| Builder: | BAYVIEW WELLINGTON / | PlanLog: | 200538 |
| Project: | PASSAGE ON THE CANAL | Layout ID: | 401459 |
| Location: | ST CATHERINES | Ref # | |
| Model: | TH-11E | Page: | 2 of 2 |
| Lot #: | | Date: | 02/15/2019 |
| Elevation: | B1 UNIT 1 | Designer: | Andrew Conway |
| | | Sales Rep: | Mario DiCano |

## *Roof Trusses*

| PROFILE | QTY<br>PLY | MARK<br>TYPE | PITCH | SPAN | HEIGHT | LUMBER | OVERHANG<br>LEFT<br>RIGHT | HEEL HEIGHT<br>LEFT<br>RIGHT | LBS.<br>BFT. | BUNDLE #<br>STACK # | LOAD BY<br>REMARKS |
|---|---|---|---|---|---|---|---|---|---|---|---|
| | **1** | **G13<br>GABLE** | 10 /12 | **11-09-00** | 6-06-07 | 2 x 4 | 1-03-08<br>1-03-08 | 1-07-11<br>1-07-11 | 57.13<br>37.67 | | |
| | **2** | **T14<br>Common** | 6 /12 | **15-02-00** | 4-11-08 | 2 x 4 | 1-03-08<br>1-03-08 | 1-02-00<br>1-02-00 | 119.33<br>78.33 | | |
| | **1** | **G14<br>GABLE** | 6 /12 | **15-02-00** | 4-11-08 | 2 x 4 | 1-03-08<br>1-03-08 | 1-02-00<br>1-02-00 | 57.07<br>38.17 | | |
| 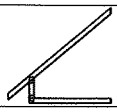 | **10** | **J1<br>Jack-Open** | 10 /12 | **4-11-08** | 5-09-04 | 2 x 4 | 1-03-08 | 1-07-11<br>5-09-04 | 165.91<br>106.67 | | |

TOTAL # TRUSS= **40** TOTAL BFT OF ALL TRUSSES= **1898.83** BFT. TOTAL WEIGHT OF ALL TRSSES **2987.16** LBS

## *HARDWARE*

| QTY | TYPE | MODEL | LENGTH |
|---|---|---|---|
| 4 | Hardware | LJS26DS | |
| 2 | Hardware | LUS24 | |
| 3 | Hardware | LUS26-2 | |

TOTAL NUMBER OF ITEMS= **9**

# DELIVERY SHIPLIST

| | | | |
|---|---|---|---|
| Lumber Yard: | TAMARACK LUMBER | Job Track: | 50264 |
| Builder: | BAYVIEW WELLINGTON / | PlanLog: | 200538 |
| Project: | PASSAGE ON THE CANAL | Layout ID: | 401460 |
| Location: | ST CATHERINES | Ref # | |
| Model: | TH-11E | Page: | 1 of 2 |
| Lot #: | | Date: | 02/15/2019 |
| Elevation: | B UNIT 2 | Designer: | Andrew Conway |
| | | Sales Rep: | Mario DiCano |

## *Roof Trusses*

| PROFILE | QTY<br>PLY | MARK<br>TYPE | PITCH | SPAN | HEIGHT | LUMBER | OVERHANG<br>LEFT<br>RIGHT | HEEL HEIGHT<br>LEFT<br>RIGHT | LBS.<br>BFT. | BUNDLE #<br>STACK # | LOAD BY<br>REMARKS |
|---|---|---|---|---|---|---|---|---|---|---|---|
| | 1<br>2-ply | T1Z<br>Hip Girder | 6 /12 | 27-10-00 | 5-09-04 | 2 x 4<br>2 x 6 | 1-03-08<br>1-03-08 | 1-02-00<br>1-02-00 | 265.81<br>168.00 | | |
| | 1 | T2<br>Hip | 6 /12 | 27-10-00 | 7-05-04 | 2 x 4 | 1-03-08<br>1-03-08 | 1-02-00<br>1-02-00 | 116.76<br>73.33 | | |
| | 1<br>2-ply | T4X<br>Half Hip<br>Girder | 6 /12 | 29-00-00 | 5-09-04 | 2 x 4<br>2 x 6 | 1-03-08 | 1-02-00<br>5-09-04 | 287.07<br>181.33 | | |
| | 1 | G5A<br>GABLE | 6 /12 | 18-10-00 | 5-07-08 | 2 x 4 | 1-03-08 | 8-00<br>1-02-00 | 69.51<br>48.67 | | |
| | 1 | T6<br>Hip | 6 /12 | 18-10-00 | 3-05-12 | 2 x 4 | 1-03-08<br>1-03-08 | 1-02-00<br>1-02-00 | 72.33<br>45.50 | | |
| | 1 | T7<br>Hip | 6 /12 | 18-10-00 | 5-01-12 | 2 x 4 | 1-03-08<br>1-03-08 | 1-02-00<br>1-02-00 | 77.1<br>48.67 | | |
| | 1 | T8<br>Common | 6 /12 | 18-10-00 | 5-10-08 | 2 x 4 | 1-03-08<br>1-03-08 | 1-02-00<br>1-02-00 | 74.67<br>48.33 | | |
| | 3 | T8X<br>Common | 6 /12 | 18-10-00 | 5-10-08 | 2 x 4 | 1-03-08<br>1-03-08 | 1-02-00<br>1-02-00 | 215.76<br>140.00 | | |
| | 1 | G13<br>GABLE | 10 /12 | 11-09-00 | 6-06-07 | 2 x 4 | 1-03-08<br>1-03-08 | 1-07-11<br>1-07-11 | 57.13<br>37.67 | | |
| | 1 | T15<br>Roof Special | 6 /12 | 27-10-00 | 7-05-04 | 2 x 4 | 1-03-08<br>1-03-08 | 1-02-00<br>2-11-11 | 123.4<br>77.33 | | |
| | 1 | T15X<br>Roof Special | 6 /12 | 27-10-00 | 7-05-04 | 2 x 4 | 1-03-08<br>1-03-08 | 1-02-00<br>2-11-11 | 127.22<br>80.33 | | |
| | 1 | T16<br>Roof Special | 6 /12 | 27-10-00 | 9-01-04 | 2 x 4 | 1-03-08<br>1-03-08 | 1-02-00<br>2-11-11 | 130.93<br>83.83 | | |
| | 1 | T16X<br>Roof Special | 6 /12 | 27-10-00 | 9-01-04 | 2 x 4 | 1-03-08<br>1-03-08 | 1-02-00<br>2-11-11 | 133.39<br>86.50 | | |
| | 1 | T17<br>Roof Special | 6 /12 | 27-10-00 | 10-06-08 | 2 x 4 | 1-03-08<br>1-03-08 | 1-02-00<br>2-11-11 | 127<br>79.67 | | |

# DELIVERY SHIPLIST

| | | | |
|---|---|---|---|
| Lumber Yard: | TAMARACK LUMBER | Job Track: | 50264 |
| Builder: | BAYVIEW WELLINGTON / PASSAGES ON THE CANAL | PlanLog: | 200538 |
| Project: | | Layout ID: | 401460 |
| Location: | ST CATHERINES | Ref # | |
| Model: | TH-11E | Page: | 2 of 2 |
| Lot #: | | Date: | 02/15/2019 |
| Elevation: | B UNIT 2 | Designer: | Andrew Conway |
| | | Sales Rep: | Mario DiCano |

## *Roof Trusses*

| PROFILE | QTY PLY | MARK TYPE | PITCH | SPAN | HEIGHT | LUMBER | OVERHANG LEFT RIGHT | HEEL HEIGHT LEFT RIGHT | LBS. BFT. | BUNDLE # STACK # | LOAD BY REMARKS |
|---|---|---|---|---|---|---|---|---|---|---|---|
| | 1 | T17X Roof Special | 6 /12 | 27-10-00 | 10-06-08 | 2 x 4 | 1-03-08 1-03-08 | 1-02-00 2-11-11 | 127.6 80.17 | | |
| | 1 | T18 Roof Special | 6 /12 | 27-10-00 | 4-01-04 | 2 x 4 | 1-03-08 1-03-08 | 1-02-00 2-11-11 | 109.03 68.50 | | |
| | 1 | T19 Roof Special | 6 /12 | 27-10-00 | 5-09-04 | 2 x 4 | 1-03-08 1-03-08 | 1-02-00 2-11-11 | 121.3 79.00 | | |
| | 2 | T20 Common | 6 /12 | 19-10-00 | 6-01-08 | 2 x 4 | 1-03-08 1-03-08 | 1-02-00 1-02-00 | 156.54 99.33 | | |
| | 1 | G20 GABLE | 6 /12 | 19-10-00 | 6-01-08 | 2 x 4 | 1-03-08 1-03-08 | 1-02-00 1-02-00 | 77.53 49.67 | | |
| | 6 | T21 Common | 6 /12 | 20-03-00 | 6-02-12 | 2 x 4 | 1-03-08 1-03-08 | 1-02-00 1-02-00 | 478.62 302.00 | | |
| 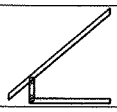 | 8 | J1 Jack-Open | 10 /12 | 4-11-08 | 5-09-04 | 2 x 4 | 1-03-08 | 1-07-11 5-09-04 | 132.73 85.33 | | |

TOTAL # TRUSS= **38** TOTAL BFT OF ALL TRUSSES= **1963.16** BFT. TOTAL WEIGHT OF ALL TRSSES **3081.43** LBS

## *HARDWARE*

| QTY | TYPE | MODEL | LENGTH |
|---|---|---|---|
| 3 | Hardware | HGUS26-2 | |
| 6 | Hardware | LJS26DS | |

TOTAL NUMBER OF ITEMS= **9**

# DELIVERY SHIPLIST

| | | | |
|---|---|---|---|
| Lumber Yard: | TAMARACK LUMBER | Job Track: | 50264 |
| Builder: | BAYVIEW WELLINGTON / | PlanLog: | 200538 |
| Project: | PASSAGE ON THE CANAL | Layout ID: | 401461 |
| Location: | ST CATHERINES | Ref # | |
| Model: | TH-11E | Page: | 1 of 2 |
| Lot #: | | Date: | 02/15/2019 |
| Elevation: | B3 UNIT 3 | Designer: | Andrew Conway |
| | | Sales Rep: | Mario DiCano |

## *Roof Trusses*

| PROFILE | QTY<br>PLY | MARK<br>TYPE | PITCH | SPAN | HEIGHT | LUMBER | OVERHANG<br>LEFT<br>RIGHT | HEEL HEIGHT<br>LEFT<br>RIGHT | LBS.<br>BFT. | BUNDLE #<br>STACK # | LOAD BY<br>REMARKS |
|---|---|---|---|---|---|---|---|---|---|---|---|
| | 4 | T3<br>Common | 6 /12 | **27-10-00** | 8-01-08 | 2 x 4 | 1-03-08<br>1-03-08 | 1-02-00<br>1-02-00 | 435.78<br>272.00 | | |
| | 1 | T3A<br>Common | 6 /12 | **27-08-00** | 8-01-08 | 2 x 4 | 1-03-08 | 1-02-00<br>1-03-00 | 106.86<br>67.33 | | |
| | 1 | T3X<br>Common | 6 /12 | **29-02-00** | 8-01-08 | 2 x 4 | 1-03-08 | 1-02-00<br>6-00 | 104.93<br>65.83 | | |
| | 2 | T8<br>Common | 6 /12 | **18-10-00** | 5-10-08 | 2 x 4 | 1-03-08<br>1-03-08 | 1-02-00<br>1-02-00 | 149.34<br>96.67 | | |
| | 2 | T8X<br>Common | 6 /12 | **18-10-00** | 5-10-08 | 2 x 4 | 1-03-08<br>1-03-08 | 1-02-00<br>1-02-00 | 143.84<br>93.33 | | |
| | 1 | T20<br>Common | 6 /12 | **19-10-00** | 6-01-08 | 2 x 4 | 1-03-08<br>1-03-08 | 1-02-00<br>1-02-00 | 78.27<br>49.67 | | |
| | 1 | G20<br>GABLE | 6 /12 | **19-10-00** | 6-01-08 | 2 x 4 | 1-03-08<br>1-03-08 | 1-02-00<br>1-02-00 | 77.53<br>49.67 | | |
| | 6 | T21<br>Common | 6 /12 | **20-03-00** | 6-02-12 | 2 x 4 | 1-03-08<br>1-03-08 | 1-02-00<br>1-02-00 | 478.62<br>302.00 | | |
| | 1<br>2-ply | T22S<br>Roof Special<br>Girder | 6 /12 | **29-02-00** | 5-09-04 | 2 x 4<br>2 x 6 | 1-03-08<br>1-03-08 | 1-02-00<br>2-11-11 | 285.89<br>181.33 | | |
| | 1 | T23<br>Roof Special | 6 /12 | **29-02-00** | 6-10-06 | 2 x 4 | 1-03-08<br>1-03-08 | 1-02-00<br>2-11-11 | 123.84<br>79.00 | | |
| | 1 | T24<br>Roof Special | 6 /12 | **29-02-00** | 5-02-06 | 2 x 4 | 1-03-08<br>1-03-08 | 1-02-00<br>2-11-11 | 121.39<br>76.67 | | |
| | 1<br>2-ply | T25A<br>Half Hip<br>Girder | 6 /12 | **27-08-00** | 5-02-03 | 2 x 4<br>2 x 6 | 1-03-08 | 1-02-00<br>5-02-03 | 268.33<br>167.33 | | |
| | 1 | T26A<br>Hip | 6 /12 | **27-08-00** | 6-10-03 | 2 x 4 | 1-03-08 | 1-02-00<br>1-03-00 | 111.37<br>71.33 | | |
| | 1<br>2-ply | T27<br>Hip Girder | 6 /12 | **18-10-00** | 5-02-03 | 2 x 4 | 1-03-08<br>1-03-08 | 1-02-00<br>1-02-00 | 160.19<br>102.67 | | |

# DELIVERY SHIPLIST

| | | | |
|---|---|---|---|
| Lumber Yard: | TAMARACK LUMBER | Job Track: | 50264 |
| Builder: | BAYVIEW WELLINGTON / | PlanLog: | 200538 |
| Project: | PASSAGE ON THE CANAL | Layout ID: | 401461 |
| Location: | ST CATHERINES | Ref # | |
| Model: | TH-11E | Page: | 2 of 2 |
| Lot #: | | Date: | 02/15/2019 |
| Elevation: | B3 UNIT 3 | Designer: | Andrew Conway |
| | | Sales Rep: | Mario DiCano |

## *Roof Trusses*

| PROFILE | QTY<br>PLY | MARK<br>TYPE | PITCH | SPAN | HEIGHT | LUMBER | OVERHANG<br>LEFT<br>RIGHT | HEEL HEIGHT<br>LEFT<br>RIGHT | LBS.<br>BFT. | BUNDLE #<br>STACK # | LOAD BY<br>REMARKS |
|---|---|---|---|---|---|---|---|---|---|---|---|
| | **1** | **G28<br>GABLE** | 10 /12 | **10-00-00** | 5-09-11 | 2 x 4 | 1-03-08<br>1-03-08 | 1-07-11<br>1-07-11 | 48.7<br>32.33 | | |
| 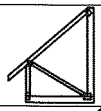 | **1<br>2-ply** | **T31C<br>Half Hip<br>Girder** | 10 /12 | **4-11-08** | 6-08-11 | 2 x 4<br>2 x 6 | 1-03-08 | 2-11-11<br>6-08-11 | 71.27<br>43.67 | | |
| 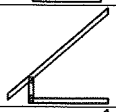 | **2** | **J1<br>Jack-Open** | 10 /12 | **4-11-08** | 5-09-04 | 2 x 4 | 1-03-08 | 1-07-11<br>5-09-04 | 33.18<br>21.33 | | |
| 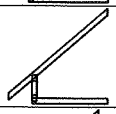 | **12** | **J2<br>Jack-Open** | 10 /12 | **4-03-00** | 5-02-03 | 2 x 4 | 1-03-08 | 1-07-11<br>5-02-03 | 176.78<br>120.00 | | |
| | **2** | **J3<br>Jack-Open** | 10 /12 | **4-11-08** | 7-01-04 | 2 x 4 | 1-03-08 | 2-11-11<br>7-01-04 | 44.23<br>27.67 | | |

TOTAL # TRUSS= **46** TOTAL BFT OF ALL TRUSSES= **1919.83** BFT. TOTAL WEIGHT OF ALL TRSSES **3020.35** LBS

## *HARDWARE*

| QTY | TYPE | MODEL | LENGTH |
|---|---|---|---|
| 6 | Hardware | LJS26DS | |
| 3 | Hardware | LUS26-2 | |

TOTAL NUMBER OF ITEMS= **9**

| JOB NAME | TRUSS NAME | QUANTITY | PLY | JOB DESC. | DRWG NO. |
|---|---|---|---|---|---|
| 401458 | T1 | 1 | 2 | CONDO BLOCK 1UNITS 1- 3<br>TRUSS DESC. | |

Tamarack Roof Truss, Burlington

Version 8.230 S Nov 17 2018 MiTek Industries, Inc. Fri Feb 22 07:51:41 2019 Page 1

ID:_YsKd95knv21l1np5yhk1ZySw5f-rucFCzAywE4AHug1cxbFYVeImuFhNBUZNGWeRmzifoW

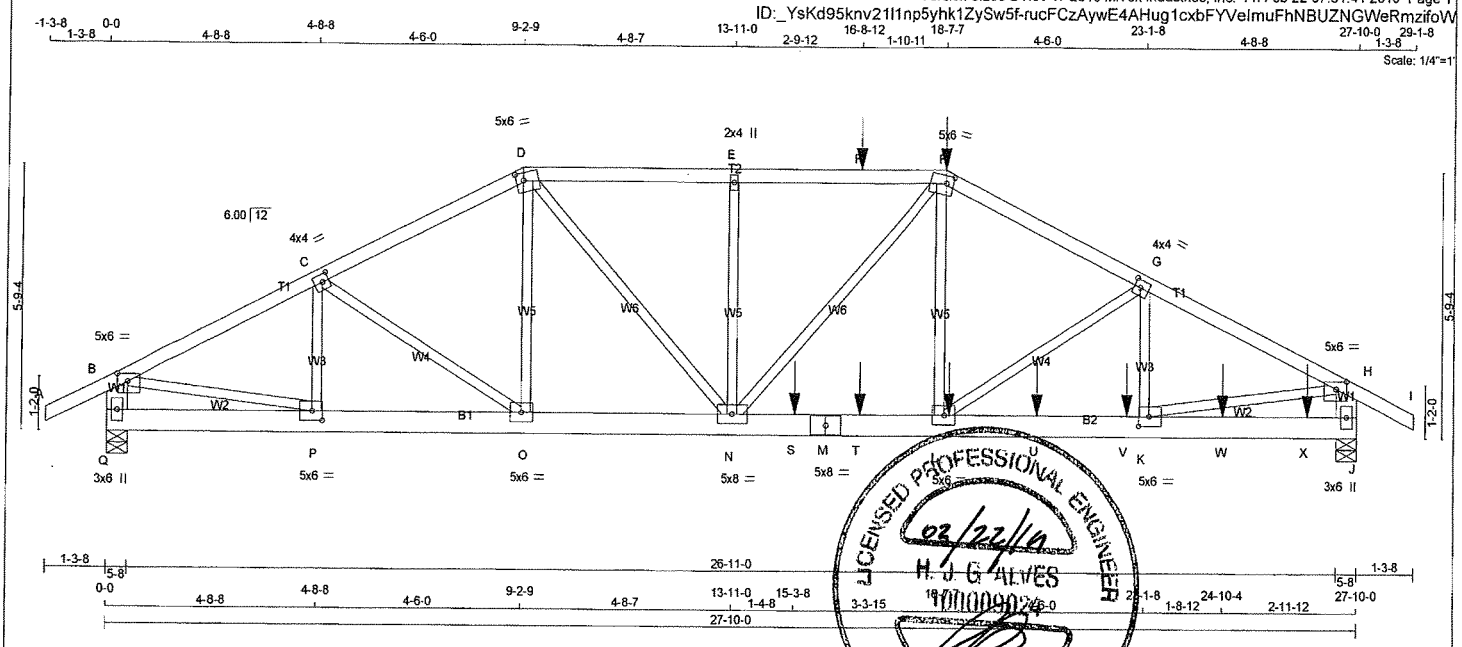


**LUMBER**

N. L. G. A. RULES

| CHORDS | SIZE | | LUMBER | DESCR. |
|---|---|---|---|---|
| A - D | 2x4 | DRY | No.2 | SPF |
| D - F | 2x4 | DRY | No.2 | SPF |
| F - I | 2x4 | DRY | No.2 | SPF |
| Q - B | 2x6 | DRY | No.2 | SPF |
| J - H | 2x6 | DRY | No.2 | SPF |
| Q - M | 2x6 | DRY | No.2 | SPF |
| M - J | 2x6 | DRY | No.2 | SPF |
| ALL WEBS EXCEPT | 2x3 | DRY | No.2 | SPF |

DRY: SEASONED LUMBER.

DESIGN CONSISTS OF 2 TRUSSES BUILT SEPARATELY THEN FASTENED TOGETHER AS FOLLOWS:

| CHORDS | #ROWS | SURFACE SPACING (IN) | LOAD(PLF) |
|---|---|---|---|
| TOP CHORDS : (0.122"X3") SPIRAL NAILS | | | |
| A- D | 1 | 12 | TOP |
| D- F | 1 | 12 | SIDE(61.0) |
| F- I | 1 | 12 | SIDE(61.0) |
| Q- B | 2 | 12 | TOP |
| J- H | 2 | 12 | TOP |
| BOTTOM CHORDS : (0.122"X3") SPIRAL NAILS | | | |
| Q- M | 2 | 12 | SIDE(0.0) |
| M- J | 2 | 12 | SIDE(183.1) |
| WEBS : (0.122"X3") SPIRAL NAILS | | | |
| L- F | 1 | 6 | SIDE(20.0) |
| 2x3 | 1 | 6 | |

NAILS TO BE DRIVEN FROM ONE SIDE ONLY.

GIRDER NAILING ASSUMES NAILED HANGERS ARE FASTENED WITH MIN. 3-0 INCH NAILS.

TOP - COMPONENTS ARE LOADED FROM THE TOP AND MUST BE PLACED ON TOP EDGE OF ALL PLIES FOR THE LOAD TO BE TRANSFERRED TO EACH PLY.

SIDE - PLF SHOWN IS THE EQUIVALENT UDL APPLIED TO ONE SIDE THAT THE CORRESPONDING NAILING PATTERN SHALL BE CAPABLE OF TRANSFERING. REMAINING PLF MUST BE APPLIED ON THE OPPOSITE SIDE OR ON THE TOP.

**PLATES (table is in inches)**

| JT | TYPE | PLATES | W | LEN | Y | X |
|---|---|---|---|---|---|---|
| B | TMVW-p | MT20 | 5.0 | 6.0 | 2.00 | 2.75 |
| C | TMWW-t | MT20 | 4.0 | 4.0 | 2.00 | 1.75 |
| D | TTWW-m | MT20 | 5.0 | 6.0 | 2.00 | 2.00 |
| E | TMW+w | MT20 | 2.0 | 4.0 | | |
| F | TTWW-m | MT20 | 5.0 | 6.0 | 2.00 | 2.00 |
| G | TMWW-t | MT20 | 4.0 | 4.0 | 2.00 | 1.75 |
| H | TMVW-p | MT20 | 5.0 | 6.0 | 2.00 | 2.75 |
| J | BMV1+p | MT20 | 3.0 | 6.0 | | |
| K | BMWW-t | MT20 | 5.0 | 6.0 | 2.50 | 2.75 |
| L | BMWW-t | MT20 | 5.0 | 6.0 | | |
| M | BS-t | MT20 | 5.0 | 8.0 | | |
| N | BMWWW-t | MT20 | 5.0 | 8.0 | | |
| O | BMWW-t | MT20 | 5.0 | 6.0 | | |
| P | BMWW-t | MT20 | 5.0 | 6.0 | 2.50 | 2.75 |
| Q | BMV1+p | MT20 | 3.0 | 6.0 | | |

**DIMENSIONS, SUPPORTS AND LOADINGS SPECIFIED BY FABRICATOR TO BE VERIFIED BY BUILDING DESIGNER**

**BEARINGS**

| JT | FACTORED GROSS REACTION VERT | HORZ | MAXIMUM FACTORED GROSS REACTION DOWN | HORZ | UPLIFT | INPUT BRG IN-SX | REQRD BRG IN-SX |
|---|---|---|---|---|---|---|---|
| Q | 2654 | 0 | 2654 | 0 | 0 | 5-8 | 5-8 |
| J | 3145 | 0 | 3145 | 0 | 0 | 5-8 | 5-8 |

**UNFACTORED REACTIONS**

| JT | 1ST LCASE COMBINED | SNOW | MAX./MIN. COMPONENT REACTIONS LIVE | PERM.LIVE | WIND | DEAD | SOIL |
|---|---|---|---|---|---|---|---|
| Q | 2005 | 1005 / 0 | 417 / 0 | 0 / 0 | 0 / 0 | 584 / 0 | 0 / 0 |
| J | 2386 | 1166 / 0 | 517 / 0 | 0 / 0 | 0 / 0 | 703 / 0 | 0 / 0 |

BEARING MATERIAL TO BE SPF NO.2 OR BETTER AT JOINT(S) Q, J

**BRACING**

TOP CHORD TO BE SHEATHED OR MAX. PURLIN SPACING = 4.27 FT.
MAX. UNBRACED BOTTOM CHORD LENGTH = 10.00 FT OR RIGID CEILING DIRECTLY APPLIED.

ALL PITCH BREAKS AND PERIMETER CORNER JOINTS MUST BE LATERALLY RESTRAINED.

**LOADING**

TOTAL LOAD CASES: (4)

CHORDS

| MEMB. FR-TO | MAX. FACTORED FORCE (LBS) | FACTORED VERT. LOAD (PLF) FROM | TO | LC1 | MAX CSI (LC) | MAX. UNBRAC LENGTH |
|---|---|---|---|---|---|---|
| A- B | 0 / 24 | -77.7 | -77.7 | 0.06 (1) | 10.00 | |
| B- C | -3851 / 0 | -77.7 | -77.7 | 0.20 (1) | 4.66 | |
| C- D | -3852 / 0 | -77.7 | -77.7 | 0.20 (1) | 4.66 | |
| D- E | -4596 / 0 | -77.7 | -77.7 | 0.25 (1) | 4.27 | |
| E- R | -4596 / 0 | -77.7 | -77.7 | 0.25 (1) | 4.27 | |
| R- F | -4596 / 0 | -77.7 | -77.7 | 0.25 (1) | 4.27 | |
| F- G | -4693 / 0 | -77.7 | -77.7 | 0.23 (1) | 4.27 | |
| G- H | -4562 / 0 | -77.7 | -77.7 | 0.23 (1) | 4.33 | |
| H- I | 0 / 24 | -77.7 | -77.7 | 0.06 (1) | 10.00 | |
| Q- B | -2551 / 0 | 0.0 | 0.0 | 0.09 (1) | 7.81 | |
| J- H | -2974 / 0 | 0.0 | 0.0 | 0.10 (1) | 7.81 | |
| Q- P | 0 / 0 | -39.5 | -39.5 | 0.05 (2) | 10.00 | |
| P- O | 0 / 3459 | -39.5 | -39.5 | 0.28 (1) | 10.00 | |
| O- N | 0 / 3430 | -39.5 | -39.5 | 0.40 (1) | 10.00 | |
| N- S | 0 / 4194 | -39.5 | -39.5 | 0.65 (1) | 10.00 | |
| S- M | 0 / 4194 | -39.5 | -39.5 | 0.65 (1) | 10.00 | |
| M- T | 0 / 4194 | -39.5 | -39.5 | 0.65 (1) | 10.00 | |
| T- L | 0 / 4194 | -39.5 | -39.5 | 0.65 (1) | 10.00 | |
| L- U | 0 / 4094 | -39.5 | -39.5 | 0.43 (1) | 10.00 | |
| U- V | 0 / 4094 | -39.5 | -39.5 | 0.43 (1) | 10.00 | |
| V- K | 0 / 4094 | -39.5 | -39.5 | 0.43 (1) | 10.00 | |
| K- W | 0 / 0 | -39.5 | -39.5 | 0.09 (2) | 10.00 | |
| W- X | 0 / 0 | -39.5 | -39.5 | 0.09 (2) | 10.00 | |
| X- J | 0 / 0 | -39.5 | -39.5 | 0.09 (2) | 10.00 | |

WEBS

| MEMB. FR-TO | MAX. FACTORED FORCE (LBS) | MAX CSI (LC) |
|---|---|---|
| P- C | -401 / 0 | 0.04 (1) |
| C- O | -39 / 0 | 0.01 (2) |
| O- D | 0 / 187 | 0.02 (3) |
| D- N | 0 / 1774 | 0.22 (1) |
| N- E | -463 / 0 | 0.11 (1) |
| N- F | 0 / 611 | 0.08 (1) |
| L- F | 0 / 804 | 0.10 (2) |
| L- G | -43 / 104 | 0.01 (1) |
| K- G | -537 / 0 | 0.06 (1) |
| B- P | 0 / 3506 | 0.43 (1) |
| K- H | 0 / 4149 | 0.51 (1) |

FACTORED CONCENTRATED LOADS (LBS)

| JT | LOC. | LC1 | MAX- | MAX+ | FACE | DIR. | TYPE | HEEL | CONN. |
|---|---|---|---|---|---|---|---|---|---|
| F | 18-7-7 | -91 | -102 | --- | FRONT | VERT | DEAD | --- | --- |
| F | 18-7-7 | -74 | -74 | --- | FRONT | VERT | TOTAL | --- | --- |
| F | 18-7-7 | -380 | -380 | --- | FRONT | VERT | SNOW | --- | --- |
| L | 18-8-12 | -45 | -57 | --- | FRONT | VERT | TOTAL | --- | --- |
| R | 16-8-12 | -67 | -67 | --- | FRONT | VERT | TOTAL | --- | --- |
| S | 15-3-8 | -1446 | -1446 | --- | FRONT | VERT | TOTAL | --- | --- |
| T | 16-8-12 | -45 | -57 | --- | FRONT | VERT | TOTAL | --- | --- |
| U | 20-8-12 | -45 | -57 | --- | FRONT | VERT | TOTAL | --- | --- |
| V | 22-8-12 | -45 | -57 | --- | FRONT | VERT | TOTAL | --- | --- |
| W | 24-10-4 | -45 | -57 | --- | FRONT | VERT | TOTAL | --- | --- |
| X | 26-8-12 | -45 | -57 | --- | FRONT | VERT | TOTAL | --- | --- |

DWG NO. TAM T1904070
STRUCTURAL
COMPONENT ONLY 1/2

LICENSED PROFESSIONAL ENGINEER
02/22/19
H. J. G. ALVES
PROVINCE OF ONTARIO

[M]

**DESIGN CRITERIA**

*** SPECIAL LOADS ANALYSIS ***
GEOMETRY AND/OR BASIC LOADS CHANGED BY USER.
LOADS WERE DERIVED FROM USER INPUT
NO FURTHER MODIFICATIONS WERE MADE

SPECIFIED LOADS:

| | | | | |
|---|---|---|---|---|
| TOP CH. | LL | = | 20.9 | PSF |
| | DL | = | 6.0 | PSF |
| BOT CH. | LL | = | 10.5 | PSF |
| | DL | = | 7.4 | PSF |
| TOTAL LOAD | | = | 44.8 | PSF |

**SPACING = 24.0 IN. C/C**

LOADING IN FLAT SECTION BASED ON A SLOPE OF 2.00/12 MINIMUM

*** NON STANDARD GIRDER ***
ADDT'L USER-DEFINED LOADS APPLIED TO ALL LOAD CASES.

THIS TRUSS IS DESIGNED FOR RESIDENTIAL OR SMALL BUILDING REQUIREMENTS OF PART 9, NBCC 2010, NBCC 2015

THIS DESIGN COMPLIES WITH:
- PART 9 OF BCBC 2018 , OBC 2012
- CSA 086-09, CSA 086-14
- TPIC 2011, TPIC 2014

(60 % OF 20.9 P.S.F. G.S.L. PLUS 8.4 P.S.F. RAIN LOAD) EQUALS 20.9 P.S.F. SPECIFIED ROOF LIVE LOAD

ALLOWABLE DEFL.(LL)= L/360 (0.93")
CALCULATED VERT. DEFL.(LL) = L/ 999 (0.10")
ALLOWABLE DEFL.(TL)= L/360 (0.93")
CALCULATED VERT. DEFL.(TL) = L/ 999 (0.18")

CSI: TC=0.25/1.00 (E-F:1) , BC=0.65/1.00 (L-N:1) , WB=0.51/1.00 (H-K:1) , SSI=0.38/1.00 (L-N:1)

DOL LUMBER=1.00 NAIL=1.00 LS BEND=1.00 COMP=1.00 SHEAR=1.00 TENS= 1.00

COMPANION LIVE LOAD FACTOR = 1.00

AUTOSOLVE HEELS OFF

TRUSS PLATE MANUFACTURER IS NOT RESPONSIBLE FOR QUALITY CONTROL IN THE TRUSS MANUFACTURING PLANT .

NAIL VALUES

| PLATE | GRIP(DRY) (PSI) MAX | MIN | SHEAR (PLI) MAX | MIN | SECTION (PLI) MAX | MIN |
|---|---|---|---|---|---|---|
| MT20 | 618 | 354 | 1667 | 788 | 1987 | 1656 |

PLATE PLACEMENT TOL. = 0.250 inches

PLATE ROTATION TOL. = 5.0 Deg.

JSI GRIP= 0.90 (B) (INPUT = 0.90 )
JSI METAL= 0.72 (M) (INPUT = 1.00 )

| JOB NAME | TRUSS NAME | QUANTITY | PLY | JOB DESC. | DRWG NO. |
|---|---|---|---|---|---|
| 401458 | T1Z | 1 | 2 | CONDO BLOCK 1UNITS 1- 3<br>TRUSS DESC. | |

Tamarack Roof Truss, Burlington

Version 8.230 S Nov 17 2018 MiTek Industries, Inc. Fri Feb 22 07:51:42 2019 Page 1

ID:_YsKd95knv21l1np5yhk1ZySw5f-J4AdPJBahYC1v2FDAe7U4iASQIZ96dBicwGBzCzifoV

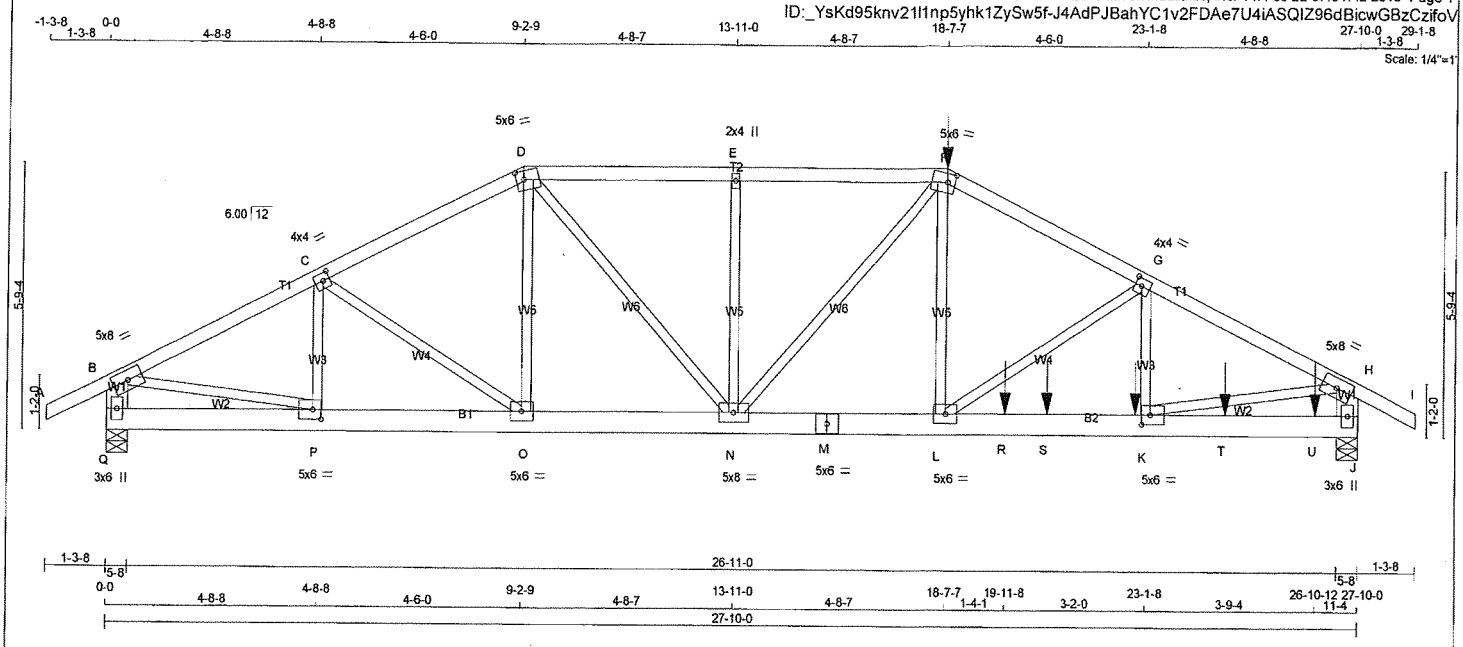


**LUMBER**

N. L. G. A. RULES

| CHORDS | SIZE | | LUMBER | DESCR. |
|---|---|---|---|---|
| A - D | 2x4 | DRY | No.2 | SPF |
| D - F | 2x4 | DRY | No.2 | SPF |
| F - I | 2x4 | DRY | No.2 | SPF |
| Q - B | 2x6 | DRY | No.2 | SPF |
| J - H | 2x6 | DRY | No.2 | SPF |
| Q - M | 2x6 | DRY | No.2 | SPF |
| M - J | 2x6 | DRY | No.2 | SPF |
| ALL WEBS EXCEPT | 2x3 | DRY | No.2 | SPF |

DRY: SEASONED LUMBER.

DESIGN CONSISTS OF 2 TRUSSES BUILT SEPARATELY THEN FASTENED TOGETHER AS FOLLOWS:

| CHORDS | #ROWS | SURFACE SPACING (IN) | LOAD(PLF) |
|---|---|---|---|
| TOP CHORDS : (0.122"X3") SPIRAL NAILS | | | |
| A- D | 1 | 12 | TOP |
| D- F | 1 | 12 | SIDE(61.0) |
| F- I | 1 | 12 | SIDE(61.0) |
| Q- B | 2 | 12 | TOP |
| J- H | 2 | 12 | TOP |
| BOTTOM CHORDS : (0.122"X3") SPIRAL NAILS | | | |
| Q- M | 2 | 12 | TOP |
| M- J | 2 | 12 | SIDE(183.1) |
| WEBS : (0.122"X3") SPIRAL NAILS | | | |
| L- F | 1 | 6 | SIDE(0.8) |
| 2x3 | 1 | 6 | |

NAILS TO BE DRIVEN FROM ONE SIDE ONLY.

GIRDER NAILING ASSUMES NAILED HANGERS ARE FASTENED WITH MIN. 3-0 INCH NAILS.

TOP - COMPONENTS ARE LOADED FROM THE TOP AND MUST BE PLACED ON TOP EDGE OF ALL PLIES FOR THE LOAD TO BE TRANSFERRED TO EACH PLY.

SIDE - PLF SHOWN IS THE EQUIVALENT UDL APPLIED TO ONE SIDE THAT THE CORRESPONDING NAILING PATTERN SHALL BE CAPABLE OF TRANSFERING. REMAINING PLF MUST BE APPLIED ON THE OPPOSITE SIDE OR ON THE TOP.

**PLATES (table is in inches)**

| JT | TYPE | PLATES | W | LEN | Y | X |
|---|---|---|---|---|---|---|
| B | TMVW-t | MT20 | 5.0 | 8.0 | | |
| C | TMWW-t | MT20 | 4.0 | 4.0 | 2.00 | 1.75 |
| D | TTWW-m | MT20 | 5.0 | 6.0 | 2.25 | 2.00 |
| E | TMW+w | MT20 | 2.0 | 4.0 | | |
| F | TTWW-m | MT20 | 5.0 | 6.0 | 2.25 | 2.00 |
| G | TMWW-t | MT20 | 4.0 | 4.0 | 2.00 | 1.75 |
| H | TMVW-t | MT20 | 5.0 | 8.0 | | |
| J | BMV1+p | MT20 | 3.0 | 6.0 | | |
| K | BMWW-t | MT20 | 5.0 | 6.0 | 2.50 | 2.25 |
| L | BMWW-t | MT20 | 5.0 | 6.0 | | |
| M | BS-t | MT20 | 5.0 | 6.0 | | |
| N | BMWWW-t | MT20 | 5.0 | 8.0 | | |
| O | BMWW-t | MT20 | 5.0 | 6.0 | | |
| P | BMWW-t | MT20 | 5.0 | 6.0 | 2.50 | 2.25 |
| Q | BMV1+p | MT20 | 3.0 | 6.0 | | |

**DIMENSIONS, SUPPORTS AND LOADINGS SPECIFIED BY FABRICATOR TO BE VERIFIED BY BUILDING DESIGNER**

**BEARINGS**

| JT | FACTORED GROSS REACTION VERT | HORZ | MAXIMUM FACTORED GROSS REACTION DOWN | HORZ | UPLIFT | INPUT BRG IN-SX | REQRD BRG IN-SX |
|---|---|---|---|---|---|---|---|
| Q | 2458 | 0 | 2458 | 0 | 0 | 5-8 | 5-8 |
| J | 3577 | 0 | 3577 | 0 | 0 | 5-8 | 5-8 |

**UNFACTORED REACTIONS**

| JT | 1ST LCASE COMBINED | MAX./MIN. COMPONENT REACTIONS SNOW | LIVE | PERM.LIVE | WIND | DEAD | SOIL |
|---|---|---|---|---|---|---|---|
| Q | 1858 | 931 / 0 | 387 / 0 | 0 / 0 | 0 / 0 | 540 / 0 | 0 / 0 |
| J | 2710 | 1337 / 0 | 580 / 0 | 0 / 0 | 0 / 0 | 793 / 0 | 0 / 0 |

BEARING MATERIAL TO BE SPF NO.2 OR BETTER AT JOINT(S) Q, J

**BRACING**

TOP CHORD TO BE SHEATHED OR MAX. PURLIN SPACING = 3.99 FT.
MAX. UNBRACED BOTTOM CHORD LENGTH = 10.00 FT OR RIGID CEILING DIRECTLY APPLIED.

ALL PITCH BREAKS AND PERIMETER CORNER JOINTS MUST BE LATERALLY RESTRAINED.

**LOADING**

TOTAL LOAD CASES: (4)

CHORDS

| MEMB. FR-TO | MAX. FACTORED FORCE (LBS) | FACTORED VERT. LOAD (PLF) FROM | TO | LC1 | MAX CSI (LC) | MAX. UNBRAC LENGTH |
|---|---|---|---|---|---|---|
| A- B | 0 / 24 | -77.7 | -77.7 | 0.06 (1) | 10.00 | |
| B- C | -3514 / 0 | -77.7 | -77.7 | 0.19 (1) | 4.84 | |
| C- D | -3509 / 0 | -77.7 | -77.7 | 0.19 (1) | 4.84 | |
| D- E | -3970 / 0 | -77.7 | -77.7 | 0.22 (1) | 4.57 | |
| E- F | -3970 / 0 | -77.7 | -77.7 | 0.22 (1) | 4.57 | |
| F- G | -5008 / 0 | -77.7 | -77.7 | 0.23 (1) | 4.16 | |
| G- H | -5447 / 0 | -77.7 | -77.7 | 0.26 (1) | 3.99 | |
| H- I | 0 / 24 | -77.7 | -77.7 | 0.06 (1) | 10.00 | |
| Q- B | -2350 / 0 | 0.0 | 0.0 | 0.08 (1) | 7.81 | |
| J- H | -3503 / 0 | 0.0 | 0.0 | 0.12 (1) | 7.48 | |
| Q- P | 0 / 0 | -39.5 | -39.5 | 0.06 (2) | 10.00 | |
| P- O | 0 / 3158 | -39.5 | -39.5 | 0.26 (1) | 10.00 | |
| O- N | 0 / 3127 | -39.5 | -39.5 | 0.26 (1) | 10.00 | |
| N- M | 0 / 4504 | -39.5 | -39.5 | 0.57 (1) | 10.00 | |
| M- L | 0 / 4504 | -39.5 | -39.5 | 0.57 (1) | 10.00 | |
| L- R | 0 / 4884 | -39.5 | -39.5 | 0.83 (1) | 10.00 | |
| R- S | 0 / 4884 | -39.5 | -39.5 | 0.83 (1) | 10.00 | |
| S- K | 0 / 4884 | -39.5 | -39.5 | 0.83 (1) | 10.00 | |
| K- T | 0 / 0 | -39.5 | -39.5 | 0.13 (2) | 10.00 | |
| T- U | 0 / 0 | -39.5 | -39.5 | 0.13 (2) | 10.00 | |
| U- J | 0 / 0 | -39.5 | -39.5 | 0.13 (2) | 10.00 | |

WEBS

| MEMB. FR-TO | MAX. FACTORED FORCE (LBS) | MAX CSI (LC) |
|---|---|---|
| P- C | -395 / 0 | 0.04 (1) |
| O- D | 0 / 347 | 0.04 (2) |
| D- N | 0 / 1282 | 0.16 (1) |
| N- E | -433 / 0 | 0.11 (1) |
| N- F | -811 / 0 | 0.38 (1) |
| L- F | 0 / 2089 | 0.26 (1) |
| L- G | -509 / 0 | 0.13 (1) |
| K- G | 0 / 268 | 0.03 (3) |
| B- P | 0 / 3200 | 0.40 (1) |
| K- H | 0 / 4990 | 0.61 (1) |

FACTORED CONCENTRATED LOADS (LBS)

| JT | LOC. | LC1 | MAX- | MAX+ | FACE | DIR. | TYPE | HEEL | |
|---|---|---|---|---|---|---|---|---|---|
| F | 18-7-7 | -91 | -102 | --- | FRONT | VERT | DEAD | --- | --- |
| F | 18-7-7 | -380 | -380 | --- | FRONT | VERT | SNOW | --- | --- |
| K | 22-10-12 | -45 | -57 | --- | FRONT | VERT | TOTAL | --- | --- |
| R | 19-11-8 | -1911 | -1911 | --- | FRONT | VERT | TOTAL | --- | --- |
| S | 20-10-12 | -45 | -57 | --- | FRONT | VERT | TOTAL | --- | --- |
| T | 24-10-12 | -45 | -57 | --- | FRONT | VERT | TOTAL | --- | --- |
| U | 26-10-12 | -46 | -58 | --- | FRONT | VERT | TOTAL | --- | --- |

LICENSED PROFESSIONAL ENGINEER
02/21/19
H. J G ALVES
100009024
PROVINCE OF ONTARIO

DWG NO. TAM T1904071
STRUCTURAL
COMPONENT ONLY

**DESIGN CRITERIA**

*** SPECIAL LOADS ANALYSIS ***
GEOMETRY AND/OR BASIC LOADS CHANGED BY USER.
LOADS WERE DERIVED FROM USER INPUT
NO FURTHER MODIFICATIONS WERE MADE

SPECIFIED LOADS:

| | | | | |
|---|---|---|---|---|
| TOP CH. | LL | = | 20.9 | PSF |
| | DL | = | 6.0 | PSF |
| BOT CH. | LL | = | 10.5 | PSF |
| | DL | = | 7.4 | PSF |
| TOTAL LOAD | | = | 44.8 | PSF |

**SPACING = 24.0 IN. C/C**

LOADING IN FLAT SECTION BASED ON A SLOPE OF 2.00/12 MINIMUM

*** NON STANDARD GIRDER ***
ADDT'L USER-DEFINED LOADS APPLIED TO ALL LOAD CASES.

THIS TRUSS IS DESIGNED FOR RESIDENTIAL OR SMALL BUILDING REQUIREMENTS OF PART 9, NBCC 2010, NBCC 2015

THIS DESIGN COMPLIES WITH:
- PART 9 OF BCBC 2018 , OBC 2012
- CSA 086-09, CSA 086-14
- TPIC 2011, TPIC 2014

(60 % OF 20.9 P.S.F. G.S.L. PLUS 8.4 P.S.F. RAIN LOAD) EQUALS 20.9 P.S.F. SPECIFIED ROOF LIVE LOAD

ALLOWABLE DEFL.(LL)= L/360 (0.93")
CALCULATED VERT. DEFL.(LL) = L/ 999 (0.11")
ALLOWABLE DEFL.(TL)= L/360 (0.93")
CALCULATED VERT. DEFL.(TL) = L/ 999 (0.19")

CSI: TC=0.26/1.00 (G-H:1) , BC=0.83/1.00 (K-L:1) , WB=0.61/1.00 (H-K:1) , SSI=0.50/1.00 (K-L:1)

DOL LUMBER=1.00 NAIL=1.00 LS BEND=1.00 COMP=1.00 SHEAR=1.00 TENS= 1.00

COMPANION LIVE LOAD FACTOR = 1.00

AUTOSOLVE HEELS OFF

TRUSS PLATE MANUFACTURER IS NOT RESPONSIBLE FOR QUALITY CONTROL IN THE TRUSS MANUFACTURING PLANT .

NAIL VALUES

| PLATE | GRIP(DRY) (PSI) MAX | MIN | SHEAR (PLI) MAX | MIN | SECTION (PLI) MAX | MIN |
|---|---|---|---|---|---|---|
| MT20 | 618 | 354 | 1667 | 788 | 1987 | 1656 |

PLATE PLACEMENT TOL. = 0.250 inches

PLATE ROTATION TOL. = 5.0 Deg.

JSI GRIP= 0.86 (P) (INPUT = 0.90 )
JSI METAL= 0.61 (P) (INPUT = 1.00 )

| JOB NAME | TRUSS NAME | QUANTITY | PLY | JOB DESC. | DRWG NO. |
|---|---|---|---|---|---|
| 401458 | T2 | 2 | 1 | CONDO BLOCK 1UNITS 1- 3<br>TRUSS DESC. | |

Tamarack Roof Truss, Burlington

Version 8.230 S Nov 17 2018 MiTek Industries, Inc. Fri Feb 22 07:51:43 2019 Page 1

ID:_YsKd95knv21l1np5yhk1ZySw5f-nHk?dfCCSsKtXCpPkMejdwjZ9hy9r33sqa?kWvezifoU

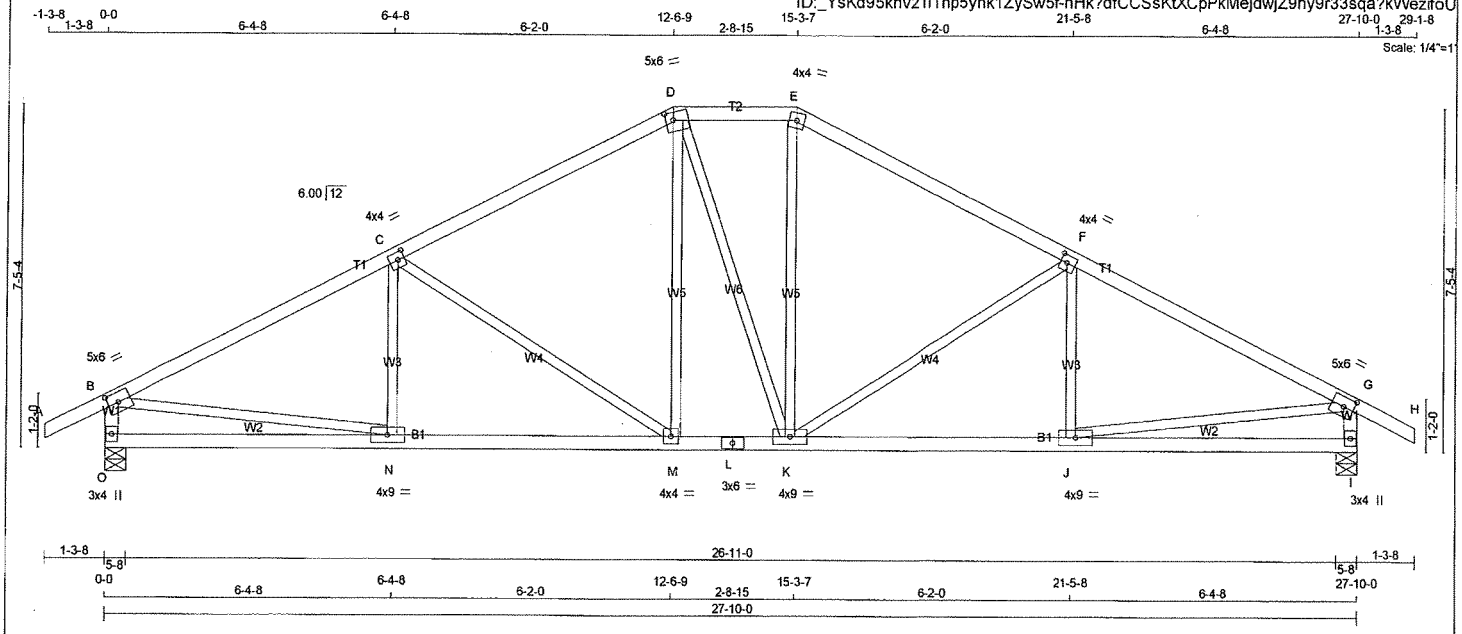


TOTAL WEIGHT = 2 X 117 = 234 lb

[M][F]

**LUMBER**

N. L. G. A. RULES

| CHORDS | SIZE | | LUMBER | DESCR. |
|---|---|---|---|---|
| A - D | 2x4 | DRY | No.2 | SPF |
| D - E | 2x4 | DRY | No.2 | SPF |
| E - H | 2x4 | DRY | No.2 | SPF |
| O - B | 2x4 | DRY | No.2 | SPF |
| I - G | 2x4 | DRY | No.2 | SPF |
| O - L | 2x4 | DRY | No.2 | SPF |
| L - I | 2x4 | DRY | No.2 | SPF |
| ALL WEBS EXCEPT | 2x3 | DRY | No.2 | SPF |

DRY: SEASONED LUMBER.

**PLATES (table is in inches)**

| JT | TYPE | PLATES | W | LEN | Y | X |
|---|---|---|---|---|---|---|
| B | TMVW-t | MT20 | 5.0 | 6.0 | 2.50 | 2.75 |
| C | TMWW-t | MT20 | 4.0 | 4.0 | 2.00 | 1.75 |
| D | TTWW-m | MT20 | 5.0 | 6.0 | 2.00 | 2.00 |
| E | TTW-m | MT20 | 4.0 | 4.0 | | |
| F | TMWW-t | MT20 | 4.0 | 4.0 | 2.00 | 1.75 |
| G | TMVW-t | MT20 | 5.0 | 6.0 | 2.50 | 2.75 |
| I | BMV1+p | MT20 | 3.0 | 4.0 | | |
| J | BMWW-t | MT20 | 4.0 | 9.0 | | |
| K | BMWWW-t | MT20 | 4.0 | 9.0 | | |
| L | BS-t | MT20 | 3.0 | 6.0 | | |
| M | BMWW-t | MT20 | 4.0 | 4.0 | | |
| N | BMWW-t | MT20 | 4.0 | 9.0 | | |
| O | BMV1+p | MT20 | 3.0 | 4.0 | | |

**DIMENSIONS, SUPPORTS AND LOADINGS SPECIFIED BY FABRICATOR TO BE VERIFIED BY BUILDING DESIGNER**

**BEARINGS**

| JT | FACTORED GROSS REACTION VERT | HORZ | MAXIMUM FACTORED GROSS REACTION DOWN | HORZ | UPLIFT | INPUT BRG IN-SX | REQRD BRG IN-SX |
|---|---|---|---|---|---|---|---|
| O | 1736 | 0 | 1736 | 0 | 0 | 5-8 | 5-8 |
| I | 1736 | 0 | 1736 | 0 | 0 | 5-8 | 5-8 |

**UNFACTORED REACTIONS**

| JT | 1ST LCASE COMBINED | MAX./MIN. COMPONENT REACTIONS SNOW | LIVE | PERM.LIVE | WIND | DEAD | SOIL |
|---|---|---|---|---|---|---|---|
| O | 1320 | 638 / 0 | 292 / 0 | 0 / 0 | 0 / 0 | 389 / 0 | 0 / 0 |
| I | 1320 | 638 / 0 | 292 / 0 | 0 / 0 | 0 / 0 | 389 / 0 | 0 / 0 |

BEARING MATERIAL TO BE SPF NO.2 OR BETTER AT JOINT(S) O, I

**BRACING**

TOP CHORD TO BE SHEATHED OR MAX. PURLIN SPACING = 4.01 FT.
MAX. UNBRACED BOTTOM CHORD LENGTH = 10.00 FT OR RIGID CEILING DIRECTLY APPLIED.

ALL PITCH BREAKS AND PERIMETER CORNER JOINTS MUST BE LATERALLY RESTRAINED.

**LOADING**

TOTAL LOAD CASES: (4)

CHORDS

| MEMB. FR-TO | MAX. FACTORED FORCE (LBS) | FACTORED VERT. LOAD (PLF) FROM | TO | LC1 | MAX CSI (LC) | MAX. UNBRAC LENGTH |
|---|---|---|---|---|---|---|
| A- B | 0 / 24 | -77.7 | -77.7 | 0.10 (1) | 10.00 | |
| B- C | -2332 / 0 | -77.7 | -77.7 | 0.52 (1) | 4.01 | |
| C- D | -1791 / 0 | -77.7 | -77.7 | 0.45 (1) | 4.53 | |
| D- E | -1587 / 0 | -77.7 | -77.7 | 0.10 (1) | 5.16 | |
| E- F | -1793 / 0 | -77.7 | -77.7 | 0.45 (1) | 4.53 | |
| F- G | -2332 / 0 | -77.7 | -77.7 | 0.52 (1) | 4.01 | |
| G- H | 0 / 24 | -77.7 | -77.7 | 0.10 (1) | 10.00 | |
| O- B | -1635 / 0 | 0.0 | 0.0 | 0.17 (1) | 6.48 | |
| I- G | -1634 / 0 | 0.0 | 0.0 | 0.17 (1) | 6.48 | |
| O- N | 0 / 0 | -39.5 | -39.5 | 0.31 (3) | 10.00 | |
| N- M | 0 / 2109 | -39.5 | -39.5 | 0.59 (2) | 10.00 | |
| M- L | 0 / 1585 | -39.5 | -39.5 | 0.37 (2) | 10.00 | |
| L- K | 0 / 1585 | -39.5 | -39.5 | 0.37 (2) | 10.00 | |
| K- J | 0 / 2108 | -39.5 | -39.5 | 0.58 (2) | 10.00 | |
| J- I | 0 / 0 | -39.5 | -39.5 | 0.31 (3) | 10.00 | |

WEBS

| MEMB. FR-TO | MAX. FACTORED FORCE (LBS) | MAX CSI (LC) |
|---|---|---|
| N- C | 0 / 212 | 0.05 (3) |
| C- M | -632 / 0 | 0.70 (1) |
| M- D | 0 / 506 | 0.11 (2) |
| D- K | 0 / 5 | 0.00 (2) |
| K- E | 0 / 512 | 0.12 (2) |
| K- F | -629 / 0 | 0.70 (1) |
| J- F | 0 / 210 | 0.05 (3) |
| B- N | 0 / 2128 | 0.48 (1) |
| J- G | 0 / 2127 | 0.48 (1) |

LICENSED PROFESSIONAL ENGINEER
02/22/19
H J G ALVES
100000024
PROVINCE OF ONTARIO

**DESIGN CRITERIA**

SPECIFIED LOADS:

| | | | | |
|---|---|---|---|---|
| TOP CH. | LL | = | 20.9 | PSF |
| | DL | = | 6.0 | PSF |
| BOT CH. | LL | = | 10.5 | PSF |
| | DL | = | 7.4 | PSF |
| TOTAL LOAD | | = | 44.8 | PSF |

**SPACING = 24.0 IN. C/C**

LOADING IN FLAT SECTION BASED ON A SLOPE OF 2.00/12 MINIMUM

THIS TRUSS IS DESIGNED FOR RESIDENTIAL OR SMALL BUILDING REQUIREMENTS OF PART 9, NBCC 2010, NBCC 2015

THIS DESIGN COMPLIES WITH:
- PART 9 OF BCBC 2018 , OBC 2012
- CSA 086-09, CSA 086-14
- TPIC 2011, TPIC 2014

(60 % OF 20.9 P.S.F. G.S.L. PLUS 8.4 P.S.F. RAIN LOAD) EQUALS 20.9 P.S.F. SPECIFIED ROOF LIVE LOAD

ALLOWABLE DEFL.(LL)= L/360 (0.93")
CALCULATED VERT. DEFL.(LL) = L/ 999 (0.10")
ALLOWABLE DEFL.(TL)= L/360 (0.93")
CALCULATED VERT. DEFL.(TL) = L/ 999 (0.19")

CSI: TC=0.52/1.00 (B-C:1) , BC=0.59/1.00 (M-N:2) , WB=0.70/1.00 (C-M:1) , SSI=0.21/1.00 (F-G:1)

DOL LUMBER=1.00 NAIL=1.00 LS BEND=1.10 COMP=1.10 SHEAR=1.10 TENS= 1.10

COMPANION LIVE LOAD FACTOR = 1.00

TRUSS PLATE MANUFACTURER IS NOT RESPONSIBLE FOR QUALITY CONTROL IN THE TRUSS MANUFACTURING PLANT .

NAIL VALUES

| PLATE | GRIP(DRY) (PSI) MAX | MIN | SHEAR (PLI) MAX | MIN | SECTION (PLI) MAX | MIN |
|---|---|---|---|---|---|---|
| MT20 | 618 | 354 | 1667 | 788 | 1987 | 1656 |

PLATE PLACEMENT TOL. = 0.250 inches

PLATE ROTATION TOL. = 5.0 Deg.

USI GRIP= 0.85 (B) (INPUT = 0.90 )
USI METAL= 0.62 (B) (INPUT = 1.00 )

DWG NO. TAM T1904072
STRUCTURAL COMPONENT ONLY

| JOB NAME | TRUSS NAME | QUANTITY | PLY | JOB DESC. | DRWG NO. |
|---|---|---|---|---|---|
| 401458 | T2X | 1 | 1 | CONDO BLOCK 1UNITS 1- 3<br>TRUSS DESC. | |

Tamarack Roof Truss, Burlington

Version 8.230 S Nov 17 2018 MiTek Industries, Inc. Fri Feb 22 07:51:44 2019 Page 1

ID:_YsKd95knv21l1np5yhk1ZySw5f-FTHNq?CrD9Sk8MOcH39yA7Fkz5HhaRC?3Ell25zifoT

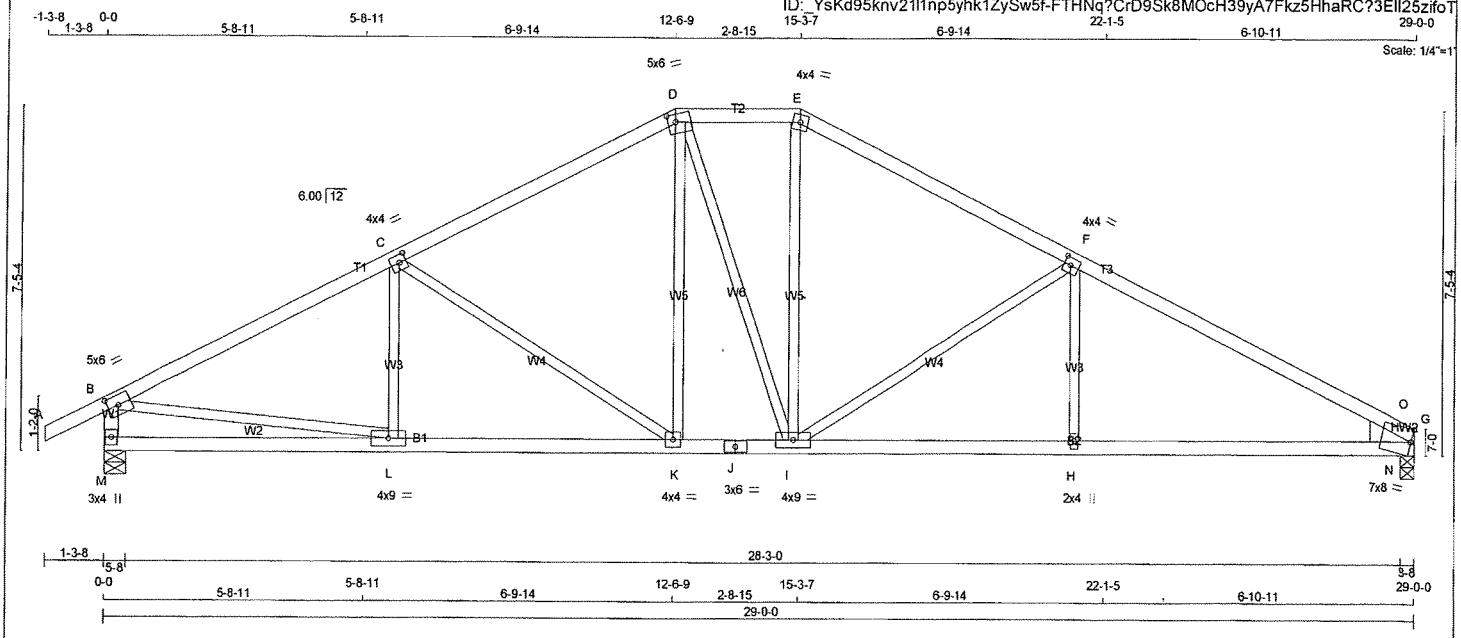


TOTAL WEIGHT = 114 lb

[M][F]

**LUMBER**

N. L. G. A. RULES

| CHORDS | SIZE | | LUMBER | DESCR. |
|---|---|---|---|---|
| A - D | 2x4 | DRY | No.2 | SPF |
| D - E | 2x4 | DRY | No.2 | SPF |
| E - G | 2x4 | DRY | No.2 | SPF |
| M - B | 2x4 | DRY | No.2 | SPF |
| M - J | 2x4 | DRY | No.2 | SPF |
| J - G | 2x4 | DRY | No.2 | SPF |
| ALL WEBS EXCEPT | 2x3 | DRY | No.2 | SPF |

DRY: SEASONED LUMBER.

**PLATES (table is in inches)**

| JT | TYPE | PLATES | W | LEN | Y | X |
|---|---|---|---|---|---|---|
| B | TMVW-t | MT20 | 5.0 | 6.0 | 2.50 | 2.75 |
| C | TMWW-t | MT20 | 4.0 | 4.0 | 2.00 | 1.75 |
| D | TTWW-m | MT20 | 5.0 | 6.0 | 2.00 | 2.00 |
| E | TTW-m | MT20 | 4.0 | 4.0 | | |
| F | TMWW-t | MT20 | 4.0 | 4.0 | 2.00 | 1.75 |
| G | TMBH1-m | MT20 | 7.0 | 8.0 | 3.50 | |
| H | BMW+w | MT20 | 2.0 | 4.0 | | |
| I | BMWWW-t | MT20 | 4.0 | 9.0 | | |
| J | BS-t | MT20 | 3.0 | 6.0 | | |
| K | BMWW-t | MT20 | 4.0 | 4.0 | | |
| L | BMWW-t | MT20 | 4.0 | 9.0 | | |
| M | BMV1+p | MT20 | 3.0 | 4.0 | | |

**DIMENSIONS, SUPPORTS AND LOADINGS SPECIFIED BY FABRICATOR TO BE VERIFIED BY BUILDING DESIGNER**

**BEARINGS**

| JT | FACTORED GROSS REACTION VERT | HORZ | MAXIMUM FACTORED GROSS REACTION DOWN | HORZ | UPLIFT | INPUT BRG IN-SX | REQRD BRG IN-SX | HEEL WEDGE |
|---|---|---|---|---|---|---|---|---|
| M | 1805 | 0 | 1805 | 0 | 0 | 5-8 | 5-8 | |
| G | 1699 | 0 | 1699 | 0 | 0 | 3-8 | 3-8 | 2x6 R |

**UNFACTORED REACTIONS**

| JT | 1ST LCASE COMBINED | MAX./MIN. COMPONENT REACTIONS SNOW | LIVE | PERM.LIVE | WIND | DEAD | SOIL |
|---|---|---|---|---|---|---|---|
| M | 1372 | 663 / 0 | 305 / 0 | 0 / 0 | 0 / 0 | 405 / 0 | 0 / 0 |
| G | 1299 | 606 / 0 | 305 / 0 | 0 / 0 | 0 / 0 | 389 / 0 | 0 / 0 |

BEARING MATERIAL TO BE SPF NO.2 OR BETTER AT JOINT(S) M, G

**BRACING**

TOP CHORD TO BE SHEATHED OR MAX. PURLIN SPACING = 3.56 FT.
MAX. UNBRACED BOTTOM CHORD LENGTH = 10.00 FT OR RIGID CEILING DIRECTLY APPLIED.

ALL PITCH BREAKS AND PERIMETER CORNER JOINTS MUST BE LATERALLY RESTRAINED.

**LOADING**

TOTAL LOAD CASES: (4)

CHORDS

| MEMB. FR-TO | MAX. FACTORED FORCE (LBS) | FACTORED VERT. LOAD (PLF) FROM | TO | LC1 MAX CSI (LC) | MAX. UNBRAC LENGTH |
|---|---|---|---|---|---|
| A- B | 0 / 24 | -77.7 | -77.7 | 0.10 (1) | 10.00 |
| B- C | -2452 / 0 | -77.7 | -77.7 | 0.53 (1) | 3.91 |
| C- D | -1925 / 0 | -77.7 | -77.7 | 0.46 (1) | 4.39 |
| D- E | -1733 / 0 | -77.7 | -77.7 | 0.11 (1) | 4.98 |
| E- F | -1953 / 0 | -77.7 | -77.7 | 0.44 (1) | 4.39 |
| F- O | -2744 / 0 | -77.7 | -77.7 | 0.58 (1) | 3.77 |
| O- G | -3144 / 0 | -77.7 | -77.7 | 0.41 (1) | 3.56 |
| M- B | -1703 / 0 | 0.0 | 0.0 | 0.17 (1) | 6.37 |
| M- L | 0 / 0 | -39.5 | -39.5 | 0.31 (3) | 10.00 |
| L- K | 0 / 2216 | -39.5 | -39.5 | 0.60 (2) | 10.00 |
| K- J | 0 / 1705 | -39.5 | -39.5 | 0.40 (2) | 10.00 |
| J- I | 0 / 1705 | -39.5 | -39.5 | 0.40 (2) | 10.00 |
| I- H | 0 / 2456 | -39.5 | -39.5 | 0.60 (2) | 10.00 |
| H- N | 0 / 2456 | -39.5 | -39.5 | 0.63 (2) | 10.00 |
| N- G | 0 / 2456 | -39.5 | -39.5 | 0.63 (2) | 10.00 |

WEBS

| MEMB. FR-TO | MAX. FACTORED FORCE (LBS) | MAX CSI (LC) |
|---|---|---|
| L- C | -11 / 204 | 0.05 (3) |
| C- K | -617 / 0 | 0.68 (1) |
| K- D | 0 / 495 | 0.11 (2) |
| D- I | 0 / 82 | 0.02 (1) |
| I- E | 0 / 575 | 0.13 (2) |
| I- F | -870 / 0 | 0.96 (1) |
| H- F | 0 / 345 | 0.08 (3) |
| B- L | 0 / 2236 | 0.50 (1) |
| N- O | 0 / 603 | 0.00 (1) |

LICENSED PROFESSIONAL ENGINEER
02/22/19
H. J. G ALVES
100009024
PROVINCE OF ONTARIO

**DESIGN CRITERIA**

SPECIFIED LOADS:

| | | | | | |
|---|---|---|---|---|---|
| TOP CH. | LL | = | 20.9 | PSF |
| | DL | = | 6.0 | PSF |
| BOT CH. | LL | = | 10.5 | PSF |
| | DL | = | 7.4 | PSF |
| TOTAL LOAD | | = | 44.8 | PSF |

**SPACING = 24.0 IN. C/C**

LOADING IN FLAT SECTION BASED ON A SLOPE OF 2.00/12 MINIMUM

THIS TRUSS IS DESIGNED FOR RESIDENTIAL OR SMALL BUILDING REQUIREMENTS OF PART 9, NBCC 2010, NBCC 2015

THIS DESIGN COMPLIES WITH:
- PART 9 OF BCBC 2018 , OBC 2012
- CSA 086-09, CSA 086-14
- TPIC 2011, TPIC 2014

(60 % OF 20.9 P.S.F. G.S.L. PLUS 8.4 P.S.F. RAIN LOAD) EQUALS 20.9 P.S.F. SPECIFIED ROOF LIVE LOAD

ALLOWABLE DEFL.(LL)= L/360 (0.97")
CALCULATED VERT. DEFL.(LL) = L/ 999 (0.12")
ALLOWABLE DEFL.(TL)= L/360 (0.97")
CALCULATED VERT. DEFL.(TL) = L/ 999 (0.22")

CSI: TC=0.58/1.00 (F-O:1) , BC=0.63/1.00 (H-N:2) , WB=0.96/1.00 (F-I:1) , SSI=0.34/1.00 (G-N:3)

DOL LUMBER=1.00 NAIL=1.00 LS BEND=1.10 COMP=1.10 SHEAR=1.10 TENS= 1.10

COMPANION LIVE LOAD FACTOR = 1.00

TRUSS PLATE MANUFACTURER IS NOT RESPONSIBLE FOR QUALITY CONTROL IN THE TRUSS MANUFACTURING PLANT .

NAIL VALUES

| PLATE | GRIP(DRY) (PSI) MAX | MIN | SHEAR (PLI) MAX | MIN | SECTION (PLI) MAX | MIN |
|---|---|---|---|---|---|---|
| MT20 | 618 | 354 | 1667 | 788 | 1987 | 1656 |

PLATE PLACEMENT TOL. = 0.250 inches

PLATE ROTATION TOL. = 5.0 Deg.

JSI GRIP= 0.89 (B) (INPUT = 0.90 )
JSI METAL= 0.65 (B) (INPUT = 1.00 )

DWG NO. TAM 7904073
STRUCTURAL
COMPONENT ONLY

| JOB NAME | TRUSS NAME | QUANTITY | PLY | JOB DESC. | DRWG NO. |
|---|---|---|---|---|---|
| 401458 | T3 | 9 | 1 | CONDO BLOCK 1UNITS 1- 3<br>TRUSS DESC. | |

Tamarack Roof Truss, Burlington

Version 8.230 S Nov 17 2018 MiTek Industries, Inc. Fri Feb 22 07:51:45 2019 Page 1
ID:_YsKd95knv21l1np5yhk1ZySw5f-jfrm2LDT_TabmWzorngBiLotVVc?J019luUraXzifoS

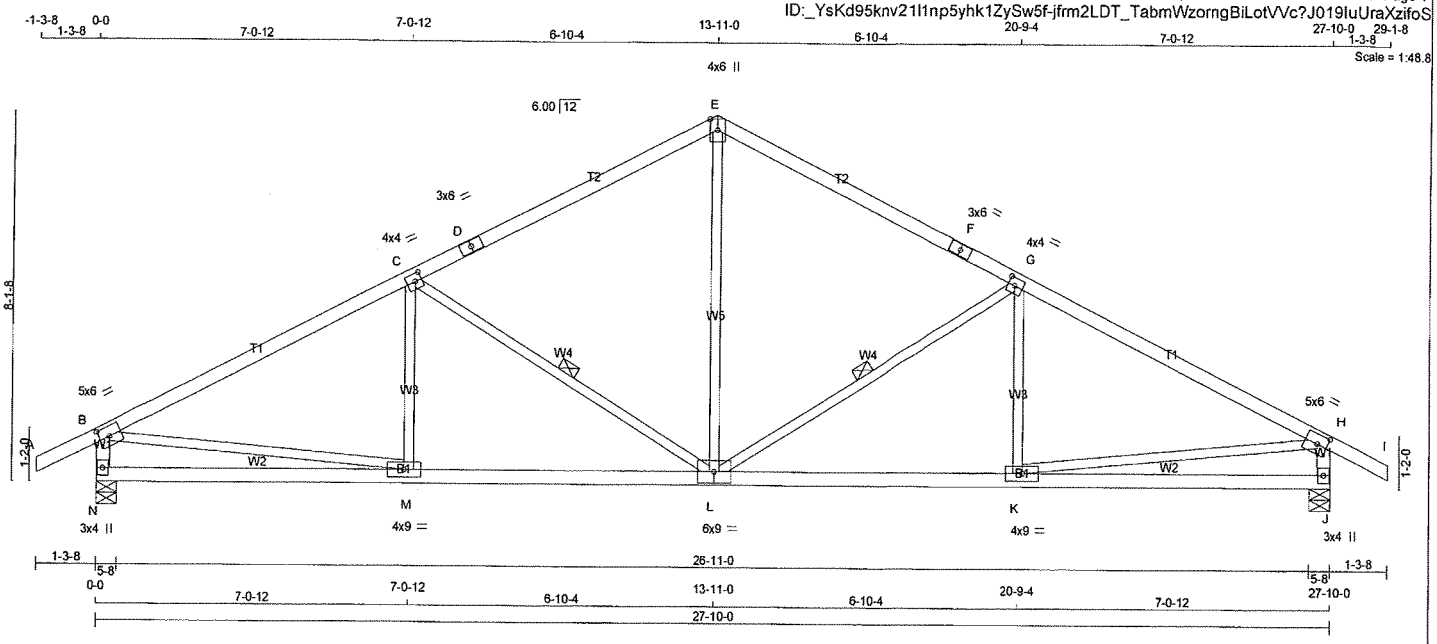


TOTAL WEIGHT = 9 X 109 = 981 lb

[M][F]

**LUMBER**

N. L. G. A. RULES

| CHORDS | SIZE | | LUMBER | DESCR. |
|---|---|---|---|---|
| A - D | 2x4 | DRY | No.2 | SPF |
| D - E | 2x4 | DRY | No.2 | SPF |
| E - F | 2x4 | DRY | No.2 | SPF |
| F - I | 2x4 | DRY | No.2 | SPF |
| N - B | 2x4 | DRY | No.2 | SPF |
| J - H | 2x4 | DRY | No.2 | SPF |
| N - L | 2x4 | DRY | No.2 | SPF |
| L - J | 2x4 | DRY | No.2 | SPF |
| ALL WEBS EXCEPT | 2x3 | DRY | No.2 | SPF |

DRY: SEASONED LUMBER.

**PLATES (table is in inches)**

| JT | TYPE | PLATES | W | LEN | Y | X |
|---|---|---|---|---|---|---|
| B | TMVW-t | MT20 | 5.0 | 6.0 | 2.50 | 2.75 |
| C | TMWW-t | MT20 | 4.0 | 4.0 | 2.00 | 1.75 |
| D | TS-t | MT20 | 3.0 | 6.0 | | |
| E | TTW+p | MT20 | 4.0 | 6.0 | Edge | |
| F | TS-t | MT20 | 3.0 | 6.0 | | |
| G | TMWW-t | MT20 | 4.0 | 4.0 | 2.00 | 1.75 |
| H | TMVW-t | MT20 | 5.0 | 6.0 | 2.50 | 2.75 |
| J | BMV1+p | MT20 | 3.0 | 4.0 | | |
| K | BMWW-t | MT20 | 4.0 | 9.0 | | |
| L | BSWWW-I | MT20 | 6.0 | 9.0 | | |
| M | BMWW-t | MT20 | 4.0 | 9.0 | | |
| N | BMV1+p | MT20 | 3.0 | 4.0 | | |

Edge - INDICATES REFERENCE CORNER OF PLATE TOUCHES EDGE OF CHORD.

**DIMENSIONS, SUPPORTS AND LOADINGS SPECIFIED BY FABRICATOR TO BE VERIFIED BY BUILDING DESIGNER**

**BEARINGS**

| JT | FACTORED GROSS REACTION VERT | HORZ | MAXIMUM FACTORED GROSS REACTION DOWN | HORZ | UPLIFT | INPUT BRG IN-SX | REQRD BRG IN-SX |
|---|---|---|---|---|---|---|---|
| N | 1736 | 0 | 1736 | 0 | 0 | 5-8 | 5-8 |
| J | 1736 | 0 | 1736 | 0 | 0 | 5-8 | 5-8 |

**UNFACTORED REACTIONS**

| JT | 1ST LCASE COMBINED | MAX./MIN. COMPONENT REACTIONS SNOW | LIVE | PERM.LIVE | WIND | DEAD | SOIL |
|---|---|---|---|---|---|---|---|
| N | 1320 | 638 / 0 | 292 / 0 | 0 / 0 | 0 / 0 | 389 / 0 | 0 / 0 |
| J | 1320 | 638 / 0 | 292 / 0 | 0 / 0 | 0 / 0 | 389 / 0 | 0 / 0 |

BEARING MATERIAL TO BE SPF NO.2 OR BETTER AT JOINT(S) N, J

**BRACING**

TOP CHORD TO BE SHEATHED OR MAX. PURLIN SPACING = 3.85 FT.
MAX. UNBRACED BOTTOM CHORD LENGTH = 10.00 FT OR RIGID CEILING DIRECTLY APPLIED.

ALL PITCH BREAKS AND PERIMETER CORNER JOINTS MUST BE LATERALLY RESTRAINED.

1 LATERAL BRACE(S) AT 1/ 2 LENGTH OF G-L, C-L.

END VERTICAL(S) MUST BE SHEATHED OR HAVE BRACES AS INDICATED IN THE MAX. UNBRACED LENGTH COLUMN OF THE TABLE BELOW

**LOADING**

TOTAL LOAD CASES: (4)

CHORDS

| MEMB. FR-TO | MAX. FACTORED FORCE (LBS) | FACTORED VERT. LOAD (PLF) FROM | TO | LC1 | MAX CSI (LC) | MAX. UNBRAC LENGTH |
|---|---|---|---|---|---|---|
| A- B | 0 / 24 | -77.7 | -77.7 | | 0.10 (1) | 10.00 |
| B- C | -2330 / 0 | -77.7 | -77.7 | | 0.65 (1) | 3.85 |
| C- D | -1653 / 0 | -77.7 | -77.7 | | 0.55 (1) | 4.52 |
| D- E | -1653 / 0 | -77.7 | -77.7 | | 0.55 (1) | 4.52 |
| E- F | -1653 / 0 | -77.7 | -77.7 | | 0.55 (1) | 4.52 |
| F- G | -1653 / 0 | -77.7 | -77.7 | | 0.55 (1) | 4.52 |
| G- H | -2330 / 0 | -77.7 | -77.7 | | 0.65 (1) | 3.85 |
| H- I | 0 / 24 | -77.7 | -77.7 | | 0.10 (1) | 10.00 |
| N- B | -1627 / 0 | 0.0 | 0.0 | | 0.16 (1) | 6.48 |
| J- H | -1627 / 0 | 0.0 | 0.0 | | 0.16 (1) | 6.48 |
| N- M | 0 / 0 | -39.5 | -39.5 | | 0.42 (3) | 10.00 |
| M- L | 0 / 2110 | -39.5 | -39.5 | | 0.69 (2) | 10.00 |
| L- K | 0 / 2110 | -39.5 | -39.5 | | 0.69 (2) | 10.00 |
| K- J | 0 / 0 | -39.5 | -39.5 | | 0.42 (3) | 10.00 |

WEBS

| MEMB. FR-TO | MAX. FACTORED FORCE (LBS) | MAX CSI (LC) |
|---|---|---|
| L- E | 0 / 1050 | 0.24 (1) |
| L- G | -781 / 0 | 0.35 (1) |
| K- G | 0 / 289 | 0.07 (3) |
| C- L | -781 / 0 | 0.35 (1) |
| M- C | 0 / 289 | 0.07 (3) |
| B- M | 0 / 2125 | 0.48 (1) |
| K- H | 0 / 2125 | 0.48 (1) |

LICENSED PROFESSIONAL ENGINEER
02/22/19
H. J. G. ALVES
100009024
PROVINCE OF ONTARIO

**DESIGN CRITERIA**

SPECIFIED LOADS:

| | | | | |
|---|---|---|---|---|
| TOP CH. | LL | = | 20.9 | PSF |
| | DL | = | 6.0 | PSF |
| BOT CH. | LL | = | 10.5 | PSF |
| | DL | = | 7.4 | PSF |
| TOTAL LOAD | | = | 44.8 | PSF |

**SPACING = 24.0 IN. C/C**

THIS TRUSS IS DESIGNED FOR RESIDENTIAL OR SMALL BUILDING REQUIREMENTS OF PART 9, NBCC 2010, NBCC 2015

THIS DESIGN COMPLIES WITH:
- PART 9 OF BCBC 2018 , OBC 2012
- CSA 086-09, CSA 086-14
- TPIC 2011, TPIC 2014

(60 % OF 20.9 P.S.F. G.S.L. PLUS 8.4 P.S.F. RAIN LOAD) EQUALS 20.9 P.S.F. SPECIFIED ROOF LIVE LOAD

ALLOWABLE DEFL.(LL)= L/360 (0.93")
CALCULATED VERT. DEFL.(LL) = L/ 999 (0.13")
ALLOWABLE DEFL.(TL)= L/360 (0.93")
CALCULATED VERT. DEFL.(TL) = L/ 999 (0.24")

CSI: TC=0.65/1.00 (G-H:1) , BC=0.69/1.00 (K-L:2) , WB=0.48/1.00 (H-K:1) , SSI=0.24/1.00 (G-H:1)

DOL LUMBER=1.00 NAIL=1.00 LS BEND=1.10 COMP=1.10 SHEAR=1.10 TENS= 1.10

COMPANION LIVE LOAD FACTOR = 1.00

TRUSS PLATE MANUFACTURER IS NOT RESPONSIBLE FOR QUALITY CONTROL IN THE TRUSS MANUFACTURING PLANT .

NAIL VALUES

| PLATE | GRIP(DRY) (PSI) MAX | MIN | SHEAR (PLI) MAX | MIN | SECTION (PLI) MAX | MIN |
|---|---|---|---|---|---|---|
| MT20 | 618 | 354 | 1667 | 788 | 1987 | 1656 |

PLATE PLACEMENT TOL. = 0.250 inches

PLATE ROTATION TOL. = 5.0 Deg.

JSI GRIP= 0.85 (H) (INPUT = 0.90 )
JSI METAL= 0.62 (H) (INPUT = 1.00 )

DWG NO. TAM T1904074
STRUCTURAL
COMPONENT ONLY

| JOB NAME | TRUSS NAME | QUANTITY | PLY | JOB DESC. | DRWG NO. |
|---|---|---|---|---|---|
| 401458 | T3A | 1 | 1 | CONDO BLOCK 1UNITS 1- 3<br>TRUSS DESC. | |

Tamarack Roof Truss, Burlington

Version 8.230 S Nov 17 2018 MiTek Industries, Inc. Fri Feb 22 07:51:46 2019 Page 1

ID:_YsKd95knv21l1np5yhk1ZySw5f-BsP8FhE5lniSOfY_PUBQFYL2lvzB2TNlWYEP7zzifoR

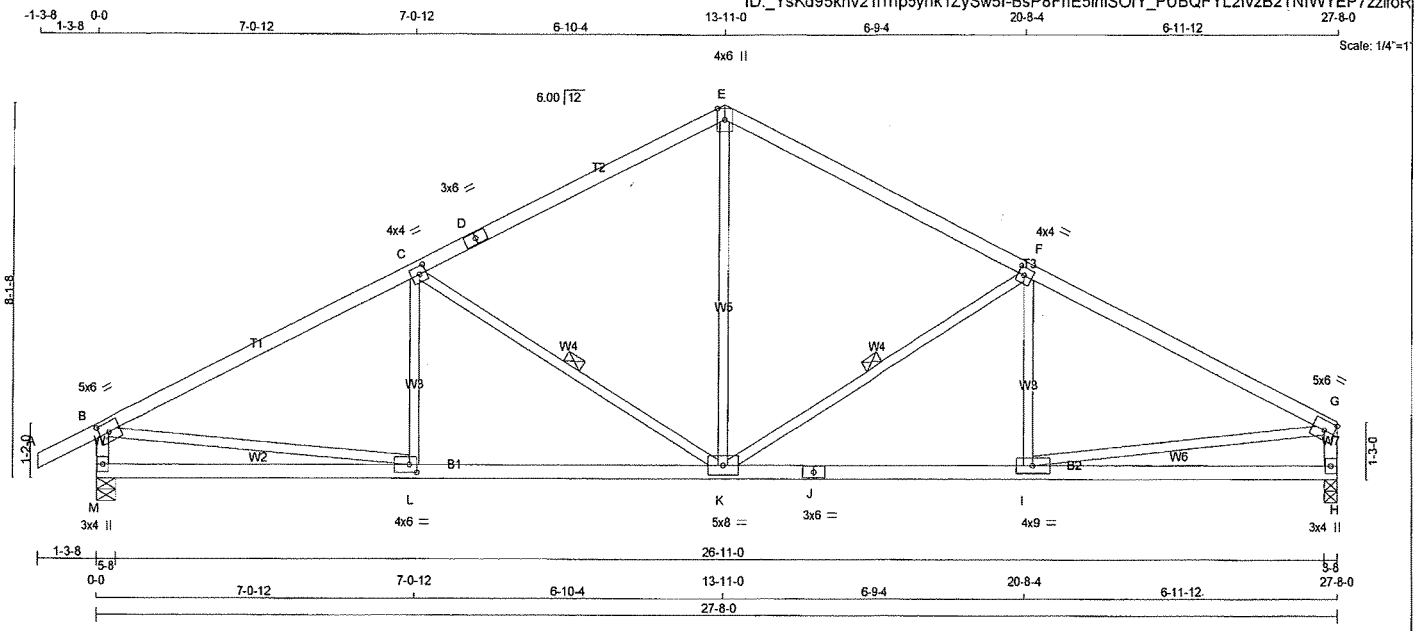


TOTAL WEIGHT = 107 lb

[M][F]

**LUMBER**

N. L. G. A. RULES

| CHORDS | SIZE | | LUMBER | DESCR. |
|---|---|---|---|---|
| A - D | 2x4 | DRY | No.2 | SPF |
| D - E | 2x4 | DRY | No.2 | SPF |
| E - G | 2x4 | DRY | No.2 | SPF |
| M - B | 2x4 | DRY | No.2 | SPF |
| H - G | 2x4 | DRY | No.2 | SPF |
| M - J | 2x4 | DRY | No.2 | SPF |
| J - H | 2x4 | DRY | No.2 | SPF |
| ALL WEBS EXCEPT | 2x3 | DRY | No.2 | SPF |

DRY: SEASONED LUMBER.

**PLATES (table is in inches)**

| JT | TYPE | PLATES | W | LEN | Y | X |
|---|---|---|---|---|---|---|
| B | TMVW-t | MT20 | 5.0 | 6.0 | 2.50 | 2.75 |
| C | TMWW-t | MT20 | 4.0 | 4.0 | 2.00 | 1.75 |
| D | TS-t | MT20 | 3.0 | 6.0 | | |
| E | TTW+p | MT20 | 4.0 | 6.0 | Edge | |
| F | TMWW-t | MT20 | 4.0 | 4.0 | 2.00 | 1.75 |
| G | TMVW-t | MT20 | 5.0 | 6.0 | | Edge |
| H | BMV1+p | MT20 | 3.0 | 4.0 | | |
| I | BMWW-t | MT20 | 4.0 | 9.0 | | |
| J | BS-t | MT20 | 3.0 | 6.0 | | |
| K | BMWWW-t | MT20 | 5.0 | 8.0 | | |
| L | BMWW-t | MT20 | 4.0 | 6.0 | 2.00 | 2.00 |
| M | BMV1+p | MT20 | 3.0 | 4.0 | | |

Edge - INDICATES REFERENCE CORNER OF PLATE TOUCHES EDGE OF CHORD.

**DIMENSIONS, SUPPORTS AND LOADINGS SPECIFIED BY FABRICATOR TO BE VERIFIED BY BUILDING DESIGNER**

**BEARINGS**

| JT | FACTORED GROSS REACTION VERT | HORZ | MAXIMUM FACTORED GROSS REACTION DOWN | HORZ | UPLIFT | INPUT BRG IN-SX | REQRD BRG IN-SX |
|---|---|---|---|---|---|---|---|
| M | 1727 | 0 | 1727 | 0 | 0 | 5-8 | 5-8 |
| H | 1621 | 0 | 1621 | 0 | 0 | 3-8 | 3-8 |

**UNFACTORED REACTIONS**

| JT | 1ST LCASE COMBINED | MAX /MIN. COMPONENT REACTIONS SNOW | LIVE | PERM.LIVE | WIND | DEAD | SOIL |
|---|---|---|---|---|---|---|---|
| M | 1312 | 635 / 0 | 291 / 0 | 0 / 0 | 0 / 0 | 387 / 0 | 0 / 0 |
| H | 1239 | 578 / 0 | 291 / 0 | 0 / 0 | 0 / 0 | 371 / 0 | 0 / 0 |

BEARING MATERIAL TO BE SPF NO.2 OR BETTER AT JOINT(S) M, H

**BRACING**

TOP CHORD TO BE SHEATHED OR MAX. PURLIN SPACING = 3.86 FT.
MAX. UNBRACED BOTTOM CHORD LENGTH = 10.00 FT OR RIGID CEILING DIRECTLY APPLIED.

ALL PITCH BREAKS AND PERIMETER CORNER JOINTS MUST BE LATERALLY RESTRAINED.

1 LATERAL BRACE(S) AT 1/ 2 LENGTH OF C-K, F-K.

END VERTICAL(S) MUST BE SHÉATHED OR HAVE BRACES AS INDICATED IN THE MAX. UNBRACED LENGTH COLUMN OF THE TABLE BELOW

**LOADING**

TOTAL LOAD CASES: (4)

CHORDS

| MEMB. FR-TO | MAX. FACTORED FORCE (LBS) | FACTORED VERT. LOAD LC1 (PLF) FROM | TO | MAX CSI (LC) | MAX. UNBRAC LENGTH |
|---|---|---|---|---|---|
| A- B | 0 / 24 | -77.7 | -77.7 | 0.10 (1) | 10.00 |
| B- C | -2304 / 0 | -77.7 | -77.7 | 0.65 (1) | 3.86 |
| C- D | -1653 / 0 | -77.7 | -77.7 | 0.55 (1) | 4.52 |
| D- E | -1653 / 0 | -77.7 | -77.7 | 0.55 (1) | 4.52 |
| E- F | -1652 / 0 | -77.7 | -77.7 | 0.54 (1) | 4.53 |
| F- G | -2266 / 0 | -77.7 | -77.7 | 0.62 (1) | 3.93 |
| M- B | -1613 / 0 | 0.0 | 0.0 | 0.16 (1) | 6.51 |
| H- G | -1511 / 0 | 0.0 | 0.0 | 0.15 (1) | 6.68 |
| M- L | 0 / 0 | -39.5 | -39.5 | 0.36 (3) | 10.00 |
| L- K | 0 / 2086 | -39.5 | -39.5 | 0.63 (2) | 10.00 |
| K- J | 0 / 2052 | -39.5 | -39.5 | 0.62 (2) | 10.00 |
| J- I | 0 / 2052 | -39.5 | -39.5 | 0.62 (2) | 10.00 |
| I- H | 0 / 0 | -39.5 | -39.5 | 0.35 (3) | 10.00 |

WEBS

| MEMB. FR-TO | MAX. FACTORED FORCE (LBS) | MAX CSI (LC) |
|---|---|---|
| L- C | 0 / 254 | 0.06 (3) |
| C- K | -753 / 0 | 0.34 (1) |
| K- E | 0 / 1049 | 0.24 (1) |
| K- F | -712 / 0 | 0.32 (1) |
| I- F | 0 / 234 | 0.06 (3) |
| B- L | 0 / 2102 | 0.47 (1) |
| I- G | 0 / 2071 | 0.47 (1) |

LICENSED PROFESSIONAL ENGINEER
02/22/19
H. J. G. ALVES
100009024
PROVINCE OF ONTARIO

**DESIGN CRITERIA**

SPECIFIED LOADS:

| | | | | |
|---|---|---|---|---|
| TOP CH. | LL | = | 20.9 | PSF |
| | DL | = | 6.0 | PSF |
| BOT CH. | LL | = | 10.5 | PSF |
| | DL | = | 7.4 | PSF |
| TOTAL LOAD | | = | 44.8 | PSF |

**SPACING = 24.0 IN. C/C**

THIS TRUSS IS DESIGNED FOR RESIDENTIAL OR SMALL BUILDING REQUIREMENTS OF PART 9, NBCC 2010, NBCC 2015

THIS DESIGN COMPLIES WITH:
- PART 9 OF BCBC 2018 , OBC 2012
- CSA 086-09, CSA 086-14
- TPIC 2011, TPIC 2014

(60 % OF 20.9 P.S.F. G.S.L. PLUS 8.4 P.S.F. RAIN LOAD) EQUALS 20.9 P.S.F. SPECIFIED ROOF LIVE LOAD

ALLOWABLE DEFL.(LL)= L/360 (0.92")
CALCULATED VERT. DEFL.(LL) = L/ 999 (0.12")
ALLOWABLE DEFL.(TL)= L/360 (0.92")
CALCULATED VERT. DEFL.(TL) = L/ 999 (0.21")

CSI: TC=0.65/1.00 (B-C:1) , BC=0.63/1.00 (K-L:2) , WB=0.47/1.00 (B-L:1) , SSI=0.24/1.00 (B-C:1)

DOL LUMBER=1.00 NAIL=1.00 LS BEND=1.10 COMP=1.10 SHEAR=1.10 TENS= 1.10

COMPANION LIVE LOAD FACTOR = 1.00

TRUSS PLATE MANUFACTURER IS NOT RESPONSIBLE FOR QUALITY CONTROL IN THE TRUSS MANUFACTURING PLANT .

NAIL VALUES

| PLATE | GRIP(DRY) (PSI) MAX | MIN | SHEAR (PLI) MAX | MIN | SECTION (PLI) MAX | MIN |
|---|---|---|---|---|---|---|
| MT20 | 618 | 354 | 1667 | 788 | 1987 | 1656 |

PLATE PLACEMENT TOL. = 0.250 inches

PLATE ROTATION TOL. = 5.0 Deg.

JSI GRIP= 0.90 (L) (INPUT = 0.90 )
JSI METAL= 0.69 (J) (INPUT = 1.00 )

DWG NO. TAM 1920405
STRUCTURAL
COMPONENT ONLY

| JOB NAME | TRUSS NAME | QUANTITY | PLY | JOB DESC. CONDO BLOCK 1UNITS 1- 3 | DRWG NO. |
|---|---|---|---|---|---|
| 401458 | T3X | 1 | 1 | TRUSS DESC. | |

Tamarack Roof Truss, Burlington

Version 8.230 S Nov 17 2018 MiTek Industries, Inc. Fri Feb 22 07:51:47 2019 Page 1

ID:_YsKd95knv21I1np5yhk1ZySw5f-f2zWT1FjV4qJ?p7AzCifnmtBYJH0nw6RICzyfQzifoQ

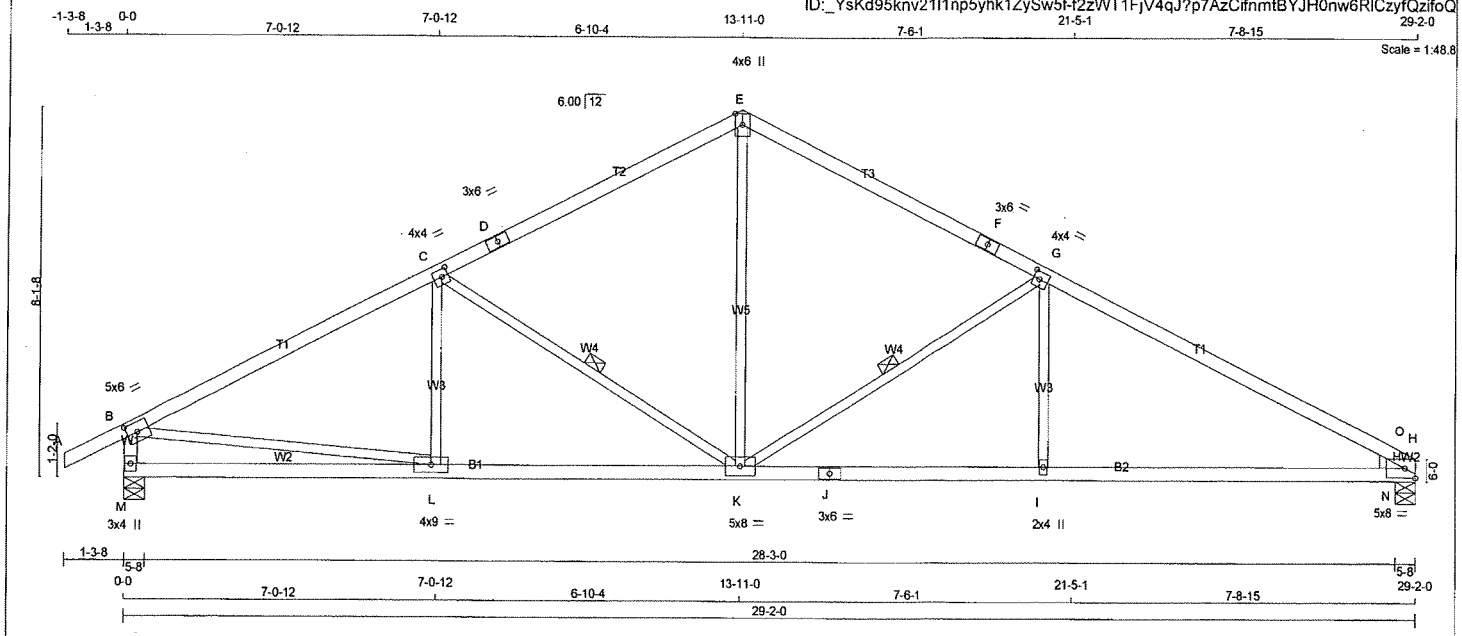


TOTAL WEIGHT = 105 lb

**LUMBER**

N. L. G. A. RULES

| CHORDS | SIZE | | LUMBER | DESCR. |
|---|---|---|---|---|
| A - D | 2x4 | DRY | No.2 | SPF |
| D - E | 2x4 | DRY | No.2 | SPF |
| E - F | 2x4 | DRY | No.2 | SPF |
| F - H | 2x4 | DRY | No.2 | SPF |
| M - B | 2x4 | DRY | No.2 | SPF |
| M - J | 2x4 | DRY | No.2 | SPF |
| J - H | 2x4 | DRY | No.2 | SPF |
| ALL WEBS EXCEPT | 2x3 | DRY | No.2 | SPF |

DRY: SEASONED LUMBER.

**PLATES (table is in inches)**

| JT | TYPE | PLATES | W | LEN | Y | X |
|---|---|---|---|---|---|---|
| B | TMWW-t | MT20 | 5.0 | 6.0 | 2.50 | 2.75 |
| C | TMWW-t | MT20 | 4.0 | 4.0 | 2.00 | 1.75 |
| D | TS-t | MT20 | 3.0 | 6.0 | | |
| E | TTW+p | MT20 | 4.0 | 6.0 | Edge | |
| F | TS-t | MT20 | 3.0 | 6.0 | | |
| G | TMWW-t | MT20 | 4.0 | 4.0 | 2.00 | 1.75 |
| H | TMBH1-I | MT20 | 5.0 | 8.0 | | Edge |
| I | BMW+w | MT20 | 2.0 | 4.0 | | |
| J | BS-t | MT20 | 3.0 | 6.0 | | |
| K | BMWWW-t | MT20 | 5.0 | 8.0 | | |
| L | BMWW-t | MT20 | 4.0 | 9.0 | | |
| M | BMV1+p | MT20 | 3.0 | 4.0 | | |

Edge - INDICATES REFERENCE CORNER OF PLATE TOUCHES EDGE OF CHORD.

**DIMENSIONS, SUPPORTS AND LOADINGS SPECIFIED BY FABRICATOR TO BE VERIFIED BY BUILDING DESIGNER**

**BEARINGS**

| JT | FACTORED GROSS REACTION VERT | HORZ | MAXIMUM FACTORED GROSS REACTION DOWN | HORZ | UPLIFT | INPUT BRG IN-SX | REQRD BRG IN-SX | HEEL WEDGE |
|---|---|---|---|---|---|---|---|---|
| M | 1815 | 0 | 1815 | 0 | 0 | 5-8 | 5-8 | |
| H | 1709 | 0 | 1709 | 0 | 0 | 5-8 | 5-8 | 2x4 R |

**UNFACTORED REACTIONS**

| JT | 1ST LCASE COMBINED | MAX./MIN. COMPONENT REACTIONS SNOW | LIVE | PERM.LIVE | WIND | DEAD | SOIL |
|---|---|---|---|---|---|---|---|
| M | 1380 | 666 / 0 | 306 / 0 | 0 / 0 | 0 / 0 | 407 / 0 | 0 / 0 |
| H | 1307 | 610 / 0 | 306 / 0 | 0 / 0 | 0 / 0 | 391 / 0 | 0 / 0 |

BEARING MATERIAL TO BE SPF NO.2 OR BETTER AT JOINT(S) M, H

**BRACING**

TOP CHORD TO BE SHEATHED OR MAX. PURLIN SPACING = 3.50 FT.
MAX. UNBRACED BOTTOM CHORD LENGTH = 10.00 FT OR RIGID CEILING DIRECTLY APPLIED.

ALL PITCH BREAKS AND PERIMETER CORNER JOINTS MUST BE LATERALLY RESTRAINED.

1 LATERAL BRACE(S) AT 1/ 2 LENGTH OF C-K, G-K.

END VERTICAL(S) MUST BE SHEATHED OR HAVE BRACES AS INDICATED IN THE MAX. UNBRACED LENGTH COLUMN OF THE TABLE BELOW

**LOADING**

TOTAL LOAD CASES: (4)

CHORDS

| MEMB. FR-TO | MAX. FACTORED FORCE (LBS) | FACTORED VERT. LOAD (PLF) FROM | TO | LC1 | MAX CSI (LC) | MAX. UNBRAC LENGTH |
|---|---|---|---|---|---|---|
| A- B | 0 / 24 | -77.7 | -77.7 | | 0.10 (1) | 10.00 |
| B- C | -2462 / 0 | -77.7 | -77.7 | | 0.67 (1) | 3.74 |
| C- D | -1827 / 0 | -77.7 | -77.7 | | 0.57 (1) | 4.33 |
| D- E | -1827 / 0 | -77.7 | -77.7 | | 0.57 (1) | 4.33 |
| E- F | -1827 / 0 | -77.7 | -77.7 | | 0.58 (1) | 4.31 |
| F- G | -1827 / 0 | -77.7 | -77.7 | | 0.58 (1) | 4.31 |
| G- O | -2760 / 0 | -77.7 | -77.7 | | 0.81 (1) | 3.50 |
| O- H | -3001 / 0 | -77.7 | -77.7 | | 0.29 (1) | 3.78 |
| M- B | -1701 / 0 | 0.0 | 0.0 | | 0.17 (1) | 6.38 |
| M- L | 0 / 0 | -39.5 | -39.5 | | 0.36 (3) | 10.00 |
| L- K | 0 / 2228 | -39.5 | -39.5 | | 0.65 (2) | 10.00 |
| K- J | 0 / 2482 | -39.5 | -39.5 | | 0.72 (2) | 10.00 |
| J- I | 0 / 2482 | -39.5 | -39.5 | | 0.72 (2) | 10.00 |
| I- N | 0 / 2482 | -39.5 | -39.5 | | 0.72 (2) | 10.00 |
| N- H | 0 / 2482 | -39.5 | -39.5 | | 0.47 (2) | 10.00 |

WEBS

| MEMB. FR-TO | MAX. FACTORED FORCE (LBS) | MAX CSI (LC) |
|---|---|---|
| L- C | 0 / 245 | 0.06 (3) |
| C- K | -736 / 0 | 0.33 (1) |
| K- E | 0 / 1207 | 0.27 (1) |
| K- G | -1038 / 0 | 0.47 (1) |
| I- G | 0 / 404 | 0.09 (3) |
| B- L | 0 / 2244 | 0.50 (1) |
| N- O | 0 / 419 | 0.00 (1) |

LICENSED PROFESSIONAL ENGINEER
02/22/19
M. J. G ALVES
100009024
PROVINCE OF ONTARIO

[M][F]

**DESIGN CRITERIA**

SPECIFIED LOADS:

| | | | | |
|---|---|---|---|---|
| TOP CH. | LL | = | 20.9 | PSF |
| | DL | = | 6.0 | PSF |
| BOT CH. | LL | = | 10.5 | PSF |
| | DL | = | 7.4 | PSF |
| TOTAL LOAD | | = | 44.8 | PSF |

**SPACING = 24.0 IN. C/C**

THIS TRUSS IS DESIGNED FOR RESIDENTIAL OR SMALL BUILDING REQUIREMENTS OF PART 9, NBCC 2010, NBCC 2015

THIS DESIGN COMPLIES WITH:
- PART 9 OF BCBC 2018 , OBC 2012
- CSA 086-09, CSA 086-14
- TPIC 2011, TPIC 2014

(60 % OF 20.9 P.S.F. G.S.L. PLUS 8.4 P.S.F. RAIN LOAD) EQUALS 20.9 P.S.F. SPECIFIED ROOF LIVE LOAD

ALLOWABLE DEFL.(LL)= L/360 (0.97")
CALCULATED VERT. DEFL.(LL) = L/ 999 (0.16")
ALLOWABLE DEFL.(TL)= L/360 (0.97")
CALCULATED VERT. DEFL.(TL) = L/ 999 (0.29")

CSI: TC=0.81/1.00 (G-O:1) , BC=0.72/1.00 (I-K:2) , WB=0.50/1.00 (B-L:1) , SSI=0.24/1.00 (B-C:1)

DOL LUMBER=1.00 NAIL=1.00 LS BEND=1.10 COMP=1.10 SHEAR=1.10 TENS= 1.10

COMPANION LIVE LOAD FACTOR = 1.00

TRUSS PLATE MANUFACTURER IS NOT RESPONSIBLE FOR QUALITY CONTROL IN THE TRUSS MANUFACTURING PLANT .

NAIL VALUES

| PLATE | GRIP(DRY) (PSI) MAX | MIN | SHEAR (PLI) MAX | MIN | SECTION (PLI) MAX | MIN |
|---|---|---|---|---|---|---|
| MT20 | 618 | 354 | 1667 | 788 | 1987 | 1656 |

PLATE PLACEMENT TOL. = 0.250 inches

PLATE ROTATION TOL. = 5.0 Deg.

JSI GRIP= 0.90 (B) (INPUT = 0.90 )
JSI METAL= 0.80 (J) (INPUT = 1.00 )

DWG NO. TAM 7904076
STRUCTURAL
COMPONENT ONLY

| JOB NAME | TRUSS NAME | QUANTITY | PLY | JOB DESC. CONDO BLOCK 1UNITS 1- 3 | DRWG NO. |
|---|---|---|---|---|---|
| 401458 | T3X2 | 2 | 1 | TRUSS DESC. | |

Tamarack Roof Truss, Burlington

Version 8.230 S Nov 17 2018 MiTek Industries, Inc. Fri Feb 22 07:51:48 2019 Page 1

ID:_YsKd95knv21l1np5yhk1ZySw5f-7EXugMGLGOyAdziNWvDuKzQNLieEWNPb_sjVBszifoP

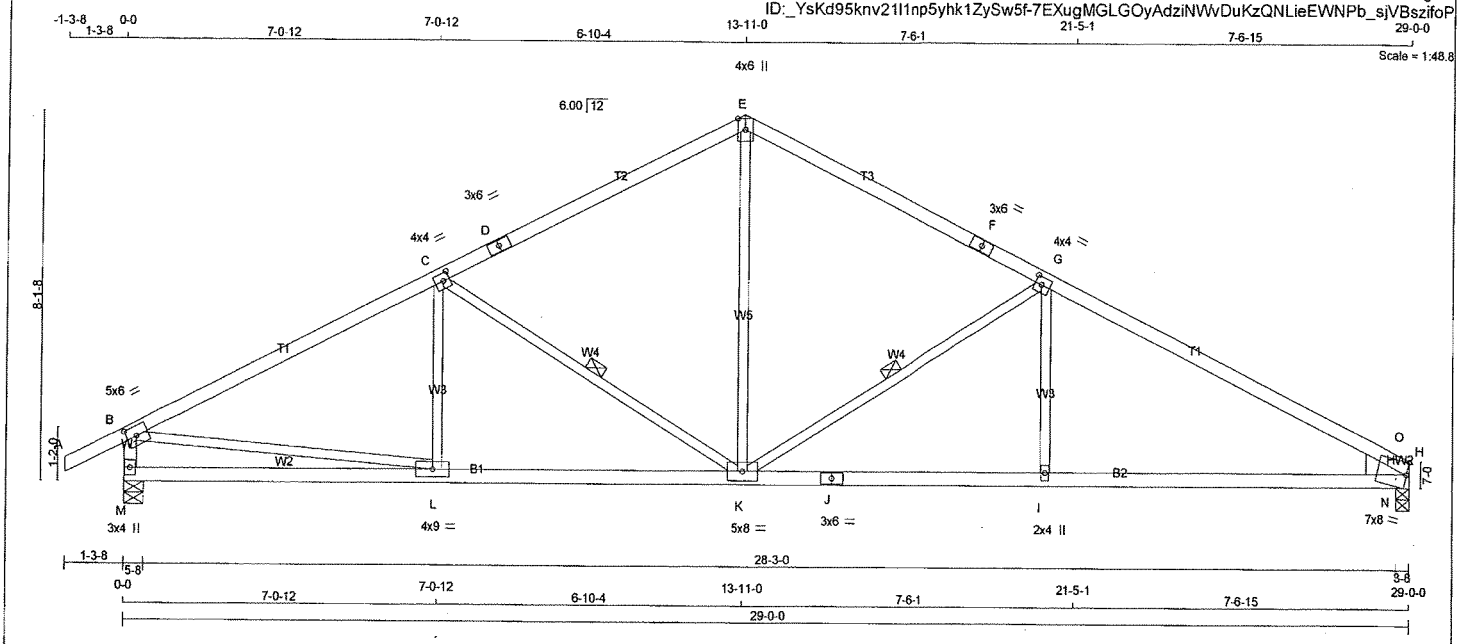


TOTAL WEIGHT = 2 X 106 = 211 lb

[M][F]

**LUMBER**

N. L. G. A. RULES

| CHORDS | SIZE | | LUMBER | DESCR. |
|---|---|---|---|---|
| A - D | 2x4 | DRY | No.2 | SPF |
| D - E | 2x4 | DRY | No.2 | SPF |
| E - F | 2x4 | DRY | No.2 | SPF |
| F - H | 2x4 | DRY | No.2 | SPF |
| M - B | 2x4 | DRY | No.2 | SPF |
| M - J | 2x4 | DRY | No.2 | SPF |
| J - H | 2x4 | DRY | No.2 | SPF |
| ALL WEBS EXCEPT | 2x3 | DRY | No.2 | SPF |

DRY: SEASONED LUMBER.

**PLATES (table is in inches)**

| JT | TYPE | PLATES | W | LEN | Y | X |
|---|---|---|---|---|---|---|
| B | TMVW-t | MT20 | 5.0 | 6.0 | 2.50 | 2.75 |
| C | TMWW-t | MT20 | 4.0 | 4.0 | 2.00 | 1.75 |
| D | TS-t | MT20 | 3.0 | 6.0 | | |
| E | TTW+p | MT20 | 4.0 | 6.0 | Edge | |
| F | TS-t | MT20 | 3.0 | 6.0 | | |
| G | TMWW-t | MT20 | 4.0 | 4.0 | 2.00 | 1.75 |
| H | TMBH1-m | MT20 | 7.0 | 8.0 | 3.50 | |
| I | BMW+w | MT20 | 2.0 | 4.0 | | |
| J | BS-t | MT20 | 3.0 | 6.0 | | |
| K | BMWWW-t | MT20 | 5.0 | 8.0 | | |
| L | BMWW-t | MT20 | 4.0 | 9.0 | | |
| M | BMV1+p | MT20 | 3.0 | 4.0 | | |

Edge - INDICATES REFERENCE CORNER OF PLATE TOUCHES EDGE OF CHORD.

**DIMENSIONS, SUPPORTS AND LOADINGS SPECIFIED BY FABRICATOR TO BE VERIFIED BY BUILDING DESIGNER**

**BEARINGS**

| JT | FACTORED GROSS REACTION VERT | HORZ | MAXIMUM FACTORED GROSS REACTION DOWN | HORZ | UPLIFT | INPUT BRG IN-SX | REQRD BRG IN-SX | HEEL WEDGE |
|---|---|---|---|---|---|---|---|---|
| M | 1805 | 0 | 1805 | 0 | 0 | 5-8 | 5-8 | |
| H | 1699 | 0 | 1699 | 0 | 0 | 3-8 | 3-8 | 2x6 R |

**UNFACTORED REACTIONS**

| JT | 1ST LCASE COMBINED | MAX./MIN. COMPONENT REACTIONS SNOW | LIVE | PERM.LIVE | WIND | DEAD | SOIL |
|---|---|---|---|---|---|---|---|
| M | 1372 | 663 / 0 | 305 / 0 | 0 / 0 | 0 / 0 | 405 / 0 | 0 / 0 |
| H | 1299 | 606 / 0 | 305 / 0 | 0 / 0 | 0 / 0 | 389 / 0 | 0 / 0 |

BEARING MATERIAL TO BE SPF NO.2 OR BETTER AT JOINT(S) M, H

**BRACING**

TOP CHORD TO BE SHEATHED OR MAX. PURLIN SPACING = 3.59 FT.
MAX. UNBRACED BOTTOM CHORD LENGTH = 10.00 FT OR RIGID CEILING DIRECTLY APPLIED.

ALL PITCH BREAKS AND PERIMETER CORNER JOINTS MUST BE LATERALLY RESTRAINED.

1 LATERAL BRACE(S) AT 1/ 2 LENGTH OF C-K, G-K.

END VERTICAL(S) MUST BE SHEATHED OR HAVE BRACES AS INDICATED IN THE MAX. UNBRACED LENGTH COLUMN OF THE TABLE BELOW

**LOADING**

TOTAL LOAD CASES: (4)

CHORDS

| MEMB. FR-TO | MAX. FACTORED FORCE (LBS) | FACTORED VERT. LOAD (PLF) FROM | TO | LC1 | MAX CSI (LC) | MAX. UNBRAC LENGTH |
|---|---|---|---|---|---|---|
| A- B | 0 / 24 | -77.7 | -77.7 | 0.10 (1) | 10.00 | |
| B- C | -2444 / 0 | -77.7 | -77.7 | 0.67 (1) | 3.75 | |
| C- D | -1809 / 0 | -77.7 | -77.7 | 0.57 (1) | 4.35 | |
| D- E | -1809 / 0 | -77.7 | -77.7 | 0.57 (1) | 4.35 | |
| E- F | -1807 / 0 | -77.7 | -77.7 | 0.55 (1) | 4.38 | |
| F- G | -1807 / 0 | -77.7 | -77.7 | 0.55 (1) | 4.38 | |
| G- O | -2696 / 0 | -77.7 | -77.7 | 0.74 (1) | 3.63 | |
| O- H | -3083 / 0 | -77.7 | -77.7 | 0.41 (1) | 3.59 | |
| M- B | -1691 / 0 | 0.0 | 0.0 | 0.17 (1) | 6.39 | |
| M- L | 0 / 0 | -39.5 | -39.5 | 0.36 (3) | 10.00 | |
| L- K | 0 / 2211 | -39.5 | -39.5 | 0.65 (2) | 10.00 | |
| K- J | 0 / 2418 | -39.5 | -39.5 | 0.66 (2) | 10.00 | |
| J- I | 0 / 2418 | -39.5 | -39.5 | 0.66 (2) | 10.00 | |
| I- N | 0 / 2418 | -39.5 | -39.5 | 0.66 (2) | 10.00 | |
| N- H | 0 / 2418 | -39.5 | -39.5 | 0.61 (2) | 10.00 | |

WEBS

| MEMB. FR-TO | MAX. FACTORED FORCE (LBS) | MAX CSI (LC) |
|---|---|---|
| L- C | 0 / 245 | 0.06 (3) |
| C- K | -736 / 0 | 0.33 (1) |
| K- E | 0 / 1186 | 0.27 (1) |
| K- G | -981 / 0 | 0.44 (1) |
| I- G | 0 / 376 | 0.09 (3) |
| B- L | 0 / 2228 | 0.50 (1) |
| N- O | 0 / 621 | 0.00 (1) |

LICENSED PROFESSIONAL ENGINEER
02/22/19
N. J. G. ALVES
100009024
PROVINCE OF ONTARIO

**DESIGN CRITERIA**

SPECIFIED LOADS:

| | | | | |
|---|---|---|---|---|
| TOP CH. | LL | = | 20.9 | PSF |
| | DL | = | 6.0 | PSF |
| BOT CH. | LL | = | 10.5 | PSF |
| | DL | = | 7.4 | PSF |
| TOTAL LOAD | | = | 44.8 | PSF |

**SPACING = 24.0 IN. C/C**

THIS TRUSS IS DESIGNED FOR RESIDENTIAL OR SMALL BUILDING REQUIREMENTS OF PART 9, NBCC 2010, NBCC 2015

THIS DESIGN COMPLIES WITH:
- PART 9 OF BCBC 2018 , OBC 2012
- CSA 086-09, CSA 086-14
- TPIC 2011, TPIC 2014

(60 % OF 20.9 P.S.F. G.S.L. PLUS 8.4 P.S.F. RAIN LOAD) EQUALS 20.9 P.S.F. SPECIFIED ROOF LIVE LOAD

ALLOWABLE DEFL.(LL)= L/360 (0.97")
CALCULATED VERT. DEFL.(LL) = L/ 999 (0.13")
ALLOWABLE DEFL.(TL)= L/360 (0.97")
CALCULATED VERT. DEFL.(TL) = L/ 999 (0.22")

CSI: TC=0.74/1.00 (G-O:1) , BC=0.66/1.00 (I-K:2) , WB=0.50/1.00 (B-L:1) , SSI=0.36/1.00 (H-N:3)

DOL LUMBER=1.00 NAIL=1.00 LS BEND=1.10 COMP=1.10 SHEAR=1.10 TENS= 1.10

COMPANION LIVE LOAD FACTOR = 1.00

TRUSS PLATE MANUFACTURER IS NOT RESPONSIBLE FOR QUALITY CONTROL IN THE TRUSS MANUFACTURING PLANT .

NAIL VALUES

| PLATE | GRIP(DRY) (PSI) MAX | MIN | SHEAR (PLI) MAX | MIN | SECTION (PLI) MAX | MIN |
|---|---|---|---|---|---|---|
| MT20 | 618 | 354 | 1667 | 788 | 1987 | 1656 |

PLATE PLACEMENT TOL. = 0.250 inches

PLATE ROTATION TOL. = 5.0 Deg.

JSI GRIP= 0.89 (B) (INPUT = 0.90 )
JSI METAL= 0.79 (J) (INPUT = 1.00 )

DWG NO. TAM 7904077
STRUCTURAL
COMPONENT ONLY

| JOB NAME | TRUSS NAME | QUANTITY | PLY | JOB DESC. CONDO BLOCK 1UNITS 1- 3 | DRWG NO. |
|---|---|---|---|---|---|
| 401458 | T4X | 2 | 2 | TRUSS DESC. | |

Tamarack Roof Truss, Burlington

Version 8.230 S Nov 17 2018 MiTek Industries, Inc. Fri Feb 22 07:51:49 2019 Page 1

ID:_YsKd95knv21l1np5yhk1ZySw5f-cR5GtiGz1i41F7HZ4dl7tBzUW62BFoykDWS3jIzifoO

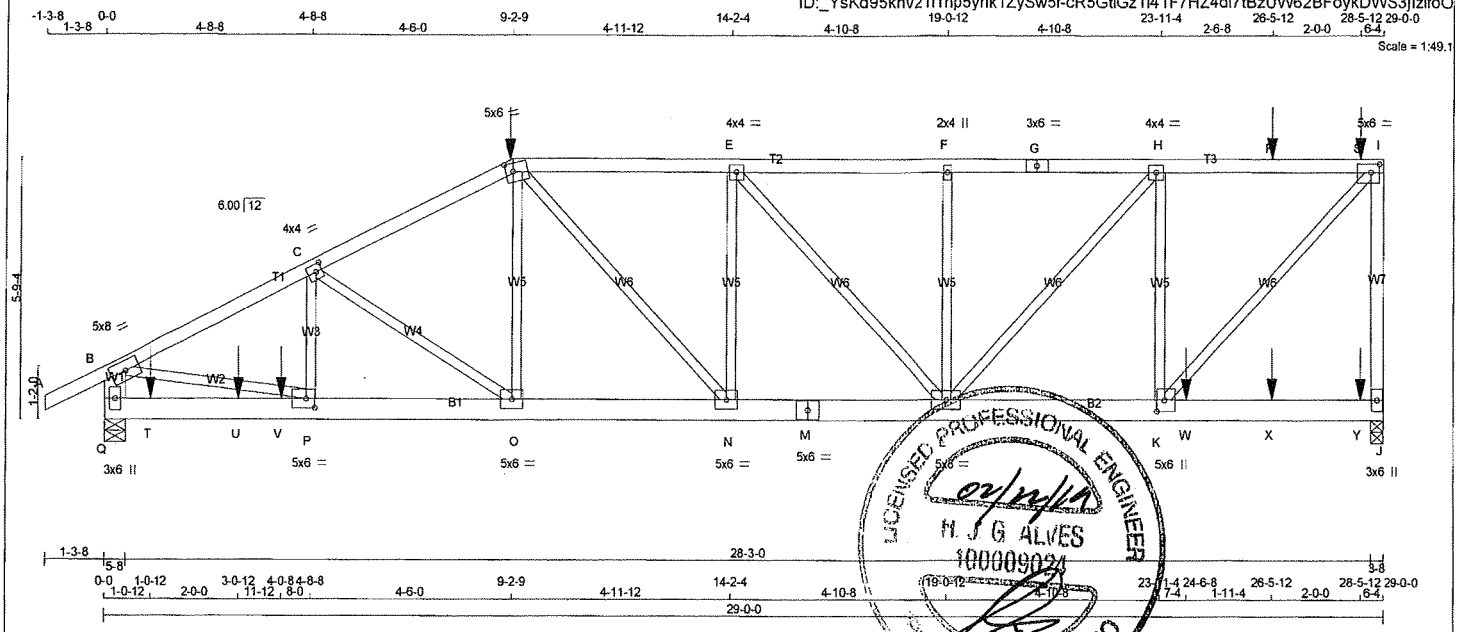


LICENSED PROFESSIONAL ENGINEER
02/22/19
N. J. G. ALVES
100009024
PROVINCE OF ONTARIO

**LUMBER**

N. L. G. A. RULES

| CHORDS | SIZE | | LUMBER | DESCR. |
|---|---|---|---|---|
| A - D | 2x4 | DRY | No.2 | SPF |
| D - G | 2x4 | DRY | No.2 | SPF |
| G - I | 2x4 | DRY | No.2 | SPF |
| J - I | 2x4 | DRY | No.2 | SPF |
| Q - B | 2x6 | DRY | No.2 | SPF |
| Q - M | 2x6 | DRY | No.2 | SPF |
| M - J | 2x6 | DRY | No.2 | SPF |
| ALL WEBS EXCEPT | 2x3 | DRY | No.2 | SPF |

DRY: SEASONED LUMBER.

DESIGN CONSISTS OF 2 TRUSSES BUILT SEPARATELY THEN FASTENED TOGETHER AS FOLLOWS:

| CHORDS | #ROWS | SURFACE SPACING (IN) | LOAD(PLF) |
|---|---|---|---|
| TOP CHORDS : (0.122"X3") SPIRAL NAILS | | | |
| A- D | 1 | 12 | SIDE(61.0) |
| D- G | 1 | 12 | SIDE(61.0) |
| G- I | 1 | 12 | SIDE(61.0) |
| I- J | 1 | 12 | TOP |
| Q- B | 2 | 12 | TOP |
| BOTTOM CHORDS : (0.122"X3") SPIRAL NAILS | | | |
| Q- M | 2 | 12 | SIDE(0.0) |
| M- J | 2 | 12 | SIDE(122.0) |
| WEBS : (0.122"X3") SPIRAL NAILS | | | |
| O- D | 1 | 6 | SIDE(0.8) |
| 2x3 | 1 | 6 | |

NAILS TO BE DRIVEN FROM ONE SIDE ONLY.

GIRDER NAILING ASSUMES NAILED HANGERS ARE FASTENED WITH MIN. 3-0 INCH NAILS.

TOP - COMPONENTS ARE LOADED FROM THE TOP AND MUST BE PLACED ON TOP EDGE OF ALL PLIES FOR THE LOAD TO BE TRANSFERRED TO EACH PLY.

SIDE - PLF SHOWN IS THE EQUIVALENT UDL APPLIED TO ONE SIDE THAT THE CORRESPONDING NAILING PATTERN SHALL BE CAPABLE OF TRANSFERING. REMAINING PLF MUST BE APPLIED ON THE OPPOSITE SIDE OR ON THE TOP.

**PLATES (table is in inches)**

| JT | TYPE | PLATES | W | LEN | Y | X |
|---|---|---|---|---|---|---|
| B | TMVW-t | MT20 | 5.0 | 8.0 | | |
| C | TMWW-t | MT20 | 4.0 | 4.0 | 2.00 | 1.75 |
| D | TTWW-m | MT20 | 5.0 | 6.0 | 2.25 | 2.00 |
| E | TMWW-t | MT20 | 4.0 | 4.0 | | |
| F | TMW+w | MT20 | 2.0 | 4.0 | | |
| G | TS-t | MT20 | 3.0 | 6.0 | | |
| H | TMWW-t | MT20 | 4.0 | 4.0 | | |
| I | TMVW-t | MT20 | 5.0 | 6.0 | 2.25 | 2.25 |
| J | BMV1+p | MT20 | 3.0 | 6.0 | | |
| K | BMWW+t | MT20 | 5.0 | 6.0 | 3.00 | 2.00 |
| L | BMWWW-t | MT20 | 5.0 | 8.0 | | |
| M | BS-t | MT20 | 5.0 | 6.0 | | |
| N | BMWW-t | MT20 | 5.0 | 6.0 | | |
| O | BMWW-t | MT20 | 5.0 | 6.0 | | |
| P | BMWW-t | MT20 | 5.0 | 6.0 | 2.50 | 2.25 |
| Q | BMV1+p | MT20 | 3.0 | 6.0 | | |

**DIMENSIONS, SUPPORTS AND LOADINGS SPECIFIED BY FABRICATOR TO BE VERIFIED BY BUILDING DESIGNER**

**BEARINGS**

| JT | FACTORED GROSS REACTION VERT | HORZ | MAXIMUM FACTORED GROSS REACTION DOWN | HORZ | UPLIFT | INPUT BRG IN-SX | REQRD BRG IN-SX |
|---|---|---|---|---|---|---|---|
| J | 3632 | 0 | 3632 | 0 | 0 | 3-8 | 3-8 |
| Q | 3792 | 0 | 3792 | 0 | 0 | 5-8 | 5-8 |

**UNFACTORED REACTIONS**

| JT | 1ST LCASE COMBINED | MAX./MIN. COMPONENT REACTIONS SNOW | LIVE | PERM.LIVE | WIND | DEAD | SOIL |
|---|---|---|---|---|---|---|---|
| J | 2751 | 1361 / 0 | 586 / 0 | 0 / 0 | 0 / 0 | 804 / 0 | 0 / 0 |
| Q | 2861 | 1449 / 0 | 584 / 0 | 0 / 0 | 0 / 0 | 828 / 0 | 0 / 0 |

BEARING MATERIAL TO BE SPF NO.2 OR BETTER AT JOINT(S) J, Q

**BRACING**

TOP CHORD TO BE SHEATHED OR MAX. PURLIN SPACING = 4.00 FT.
MAX. UNBRACED BOTTOM CHORD LENGTH = 10.00 FT OR RIGID CEILING DIRECTLY APPLIED.

ALL PITCH BREAKS AND PERIMETER CORNER JOINTS MUST BE LATERALLY RESTRAINED.

**LOADING**

TOTAL LOAD CASES: (4)

CHORDS

| MEMB. FR-TO | MAX. FACTORED FORCE (LBS) | FACTORED VERT. LOAD (PLF) FROM | TO | LC1 | MAX CSI (LC) | MAX. UNBRAC LENGTH |
|---|---|---|---|---|---|---|
| A- B | 0 / 24 | -77.7 | -77.7 | 0.06 (1) | 10.00 | |
| B- C | -5424 / 0 | -77.7 | -77.7 | 0.26 (1) | 4.00 | |
| C- D | -4220 / 0 | -77.7 | -77.7 | 0.19 (1) | 4.49 | |
| D- E | -4015 / 0 | -77.7 | -77.7 | 0.23 (1) | 4.55 | |
| E- F | -3632 / 0 | -77.7 | -77.7 | 0.21 (1) | 4.75 | |
| F- G | -3632 / 0 | -77.7 | -77.7 | 0.24 (1) | 4.72 | |
| G- H | -3632 / 0 | -77.7 | -77.7 | 0.24 (1) | 4.72 | |
| H- R | -2908 / 0 | -77.7 | -77.7 | 0.24 (1) | 5.15 | |
| R- S | -2908 / 0 | -77.7 | -77.7 | 0.24 (1) | 5.15 | |
| S- I | -2908 / 0 | -77.7 | -77.7 | 0.24 (1) | 5.15 | |
| J- I | -3364 / 0 | 0.0 | 0.0 | 0.97 (1) | 6.36 | |
| Q- B | -3489 / 0 | 0.0 | 0.0 | 0.12 (1) | 7.48 | |
| Q- T | 0 / 0 | -39.5 | -39.5 | 0.27 (1) | 10.00 | |
| T- U | 0 / 0 | -39.5 | -39.5 | 0.27 (1) | 10.00 | |
| U- V | 0 / 0 | -39.5 | -39.5 | 0.27 (1) | 10.00 | |
| V- P | 0 / 0 | -39.5 | -39.5 | 0.27 (1) | 10.00 | |
| P- O | 0 / 4864 | -39.5 | -39.5 | 0.42 (1) | 10.00 | |
| O- N | 0 / 3776 | -39.5 | -39.5 | 0.28 (1) | 10.00 | |
| N- M | 0 / 4015 | -39.5 | -39.5 | 0.31 (1) | 10.00 | |
| M- L | 0 / 4015 | -39.5 | -39.5 | 0.31 (1) | 10.00 | |
| L- K | 0 / 2908 | -39.5 | -39.5 | 0.35 (1) | 10.00 | |
| K- W | 0 / 0 | -39.5 | -39.5 | 0.19 (1) | 10.00 | |
| W- X | 0 / 0 | -39.5 | -39.5 | 0.19 (1) | 10.00 | |
| X- Y | 0 / 0 | -39.5 | -39.5 | 0.19 (1) | 10.00 | |
| Y- J | 0 / 0 | -39.5 | -39.5 | 0.19 (1) | 10.00 | |

WEBS

| MEMB. FR-TO | MAX. FACTORED FORCE (LBS) | MAX CSI (LC) |
|---|---|---|
| P- C | 0 / 875 | 0.11 (1) |
| O- D | -1335 / 0 | 0.35 (1) |
| B- P | 0 / 852 | 0.11 (1) |
| K- I | 0 / 4929 | 0.61 (1) |
| D- N | 0 / 4252 | 0.53 (1) |
| K- H | 0 / 354 | 0.04 (1) |
| N- E | -1299 / 0 | 0.32 (1) |
| L- H | -8 / 100 | 0.01 (3) |
| E- L | 0 / 1080 | 0.13 (1) |
| L- F | -571 / 0 | 0.29 (1) |
| | -337 / 0 | 0.08 (1) |

DWG NO. TAM 71904078
STRUCTURAL
COMPONENT ONLY

FACTORED CONCENTRATED LOADS (LBS)

| JT | LOC. | LC1 | MAX- | MAX+ | FACE | DIR. | TYPE | HEEL | CONN. |
|---|---|---|---|---|---|---|---|---|---|
| D | 9-2-9 | -91 | -102 | --- | FRONT | VERT | DEAD | --- | --- |
| D | 9-2-9 | -380 | -380 | --- | FRONT | VERT | SNOW | --- | --- |
| R | 26-5-12 | -67 | -67 | --- | BACK | VERT | TOTAL | --- | --- |
| S | 28-5-12 | -85 | -85 | --- | BACK | VERT | TOTAL | --- | --- |
| T | 1-0-12 | -45 | -57 | --- | BACK | VERT | TOTAL | --- | --- |
| U | 3-0-12 | -45 | -57 | --- | BACK | VERT | TOTAL | --- | --- |
| V | 4-0-8 | -1546 | -1546 | --- | BACK | VERT | TOTAL | --- | --- |
| W | 24-6-8 | -1563 | -1563 | --- | BACK | VERT | TOTAL | --- | --- |
| X | 26-5-12 | -45 | -57 | --- | BACK | VERT | TOTAL | --- | --- |
| Y | 28-5-12 | -54 | -69 | --- | BACK | VERT | TOTAL | --- | --- |

[M]

**DESIGN CRITERIA**

*** SPECIAL LOADS ANALYSIS ***
GEOMETRY AND/OR BASIC LOADS CHANGED BY USER.
LOADS WERE DERIVED FROM USER INPUT
NO FURTHER MODIFICATIONS WERE MADE

SPECIFIED LOADS:

| | | | | |
|---|---|---|---|---|
| TOP CH. | LL | = | 20.9 | PSF |
| | DL | = | 6.0 | PSF |
| BOT CH. | LL | = | 10.5 | PSF |
| | DL | = | 7.4 | PSF |
| TOTAL LOAD | | = | 44.8 | PSF |

**SPACING = 24.0 IN. C/C**

LOADING IN FLAT SECTION BASED ON A SLOPE OF 2.00/12 MINIMUM

*** NON STANDARD GIRDER ***
ADDT'L USER-DEFINED LOADS APPLIED TO ALL LOAD CASES.

THIS TRUSS IS DESIGNED FOR RESIDENTIAL OR SMALL BUILDING REQUIREMENTS OF PART 9, NBCC 2010, NBCC 2015

THIS DESIGN COMPLIES WITH:
- PART 9 OF BCBC 2018 , OBC 2012
- CSA 086-09, CSA 086-14
- TPIC 2011, TPIC 2014

(60 % OF 20.9 P.S.F. G.S.L. PLUS 8.4 P.S.F. RAIN LOAD) EQUALS 20.9 P.S.F. SPECIFIED ROOF LIVE LOAD

ALLOWABLE DEFL.(LL)= L/360 (0.97")
CALCULATED VERT. DEFL.(LL) = L/ 999 (0.09")
ALLOWABLE DEFL.(TL)= L/360 (0.97")
CALCULATED VERT. DEFL.(TL) = L/ 999 (0.16")

CSI: TC=0.97/1.00 (I-J:1) , BC=0.42/1.00 (O-P:1) , WB=0.61/1.00 (B-P:1) , SSI=0.53/1.00 (J-K:1)

DOL LUMBER=1.00 NAIL=1.00 LS BEND=1.00 COMP=1.00 SHEAR=1.00 TENS= 1.00

COMPANION LIVE LOAD FACTOR = 1.00

AUTOSOLVE RIGHT HEEL ONLY

TRUSS PLATE MANUFACTURER IS NOT RESPONSIBLE FOR QUALITY CONTROL IN THE TRUSS MANUFACTURING PLANT .

NAIL VALUES

| PLATE | GRIP(DRY) (PSI) MAX | MIN | SHEAR (PLI) MAX | MIN | SECTION (PLI) MAX | MIN |
|---|---|---|---|---|---|---|
| MT20 | 618 | 354 | 1667 | 788 | 1987 | 1656 |

PLATE PLACEMENT TOL. = 0.250 inches

PLATE ROTATION TOL. = 5.0 Deg.

JSI GRIP= 0.89 (I) (INPUT = 0.90 )
JSI METAL= 0.61 (P) (INPUT = 1.00 )

| JOB NAME | TRUSS NAME | QUANTITY | PLY | JOB DESC. | DRWG NO. |
|---|---|---|---|---|---|
| 401458 | G5A | 2 | 1 | CONDO BLOCK 1UNITS 1- 3<br>TRUSS DESC. | |

Tamarack Roof Truss, Burlington

Version 8.230 S Nov 17 2018 MiTek Industries, Inc. Fri Feb 22 07:51:35 2019 Page 1

ID:_YsKd95knv21l1np5yhk1ZySw5f-0kF_xw5BKOJ0ZzCtGgUrlEOleTM0zbpg?K3JE6zifoc

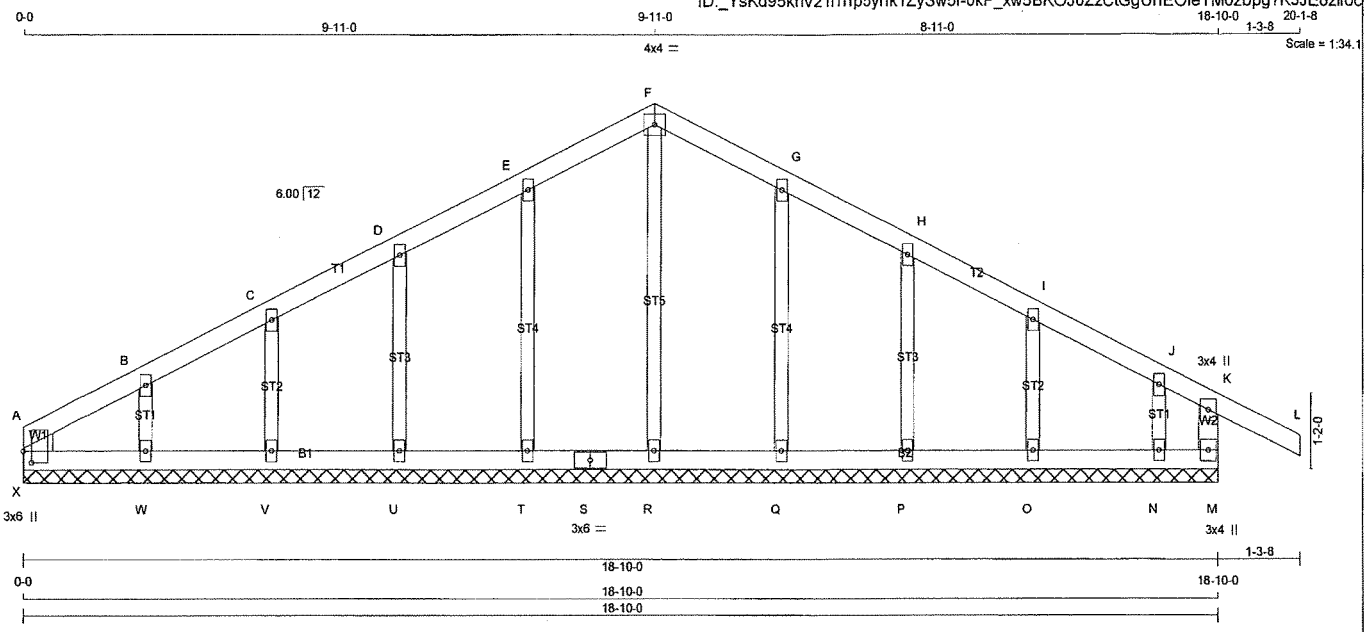


TOTAL WEIGHT = 2 X 70 = 139 lb

[M]

**LUMBER**

N. L. G. A. RULES

| CHORDS | SIZE | | LUMBER | DESCR. |
|---|---|---|---|---|
| X - A | 2x6 | DRY | No.2 | SPF |
| A - F | 2x4 | DRY | No.2 | SPF |
| F - L | 2x4 | DRY | No.2 | SPF |
| M - K | 2x4 | DRY | No.2 | SPF |
| X - S | 2x4 | DRY | No.2 | SPF |
| S - M | 2x4 | DRY | No.2 | SPF |
| ALL WEBS | 2x3 | DRY | No.2 | SPF |
| ALL GABLE WEBS | 2x3 | DRY | No.2 | SPF |

DRY: SEASONED LUMBER.

GABLE STUDS SPACED AT 2-0-0 OC.

**PLATES (table is in inches)**

| JT | TYPE | PLATES | W | LEN | Y | X |
|---|---|---|---|---|---|---|
| A | | | | | | |
| B, C, D, E, G, H, I, J | | | | | | |
| B | TMW+w | MT20 | 2.0 | 4.0 | | |
| F | TTW-p | MT20 | 4.0 | 4.0 | | |
| K | TMV+p | MT20 | 3.0 | 4.0 | | |
| M | BMV1+p | MT20 | 3.0 | 4.0 | | |
| N, O, P, Q, R, T, U, V, W | | | | | | |
| N | BMW1+w | MT20 | 2.0 | 4.0 | | |
| S | BS-t | MT20 | 3.0 | 6.0 | | |
| X | | | | | | |
| X | TMBMV1+p | MT20 | 3.0 | 6.0 | 2.00 | 1.50 |

**DIMENSIONS, SUPPORTS AND LOADINGS SPECIFIED BY FABRICATOR TO BE VERIFIED BY BUILDING DESIGNER**

**BEARINGS**

THIS TRUSS DESIGNED FOR CONTINUOUS BEARINGS.

THIS TRUSS REQUIRES RIGID SHEATHING ON EXPOSED FACE.

BEARING MATERIAL TO BE SPF NO.2 OR BETTER AT JOINT(S)

**BRACING**

TOP CHORD TO BE SHEATHED OR MAX. PURLIN SPACING = 6.25 FT.
MAX. UNBRACED BOTTOM CHORD LENGTH = 10.00 FT OR RIGID CEILING DIRECTLY APPLIED.

ALL PITCH BREAKS AND PERIMETER CORNER JOINTS MUST BE LATERALLY RESTRAINED.

**LOADING**

TOTAL LOAD CASES: (4)

CHORDS

| MEMB. FR-TO | MAX. FACTORED FORCE (LBS) | FACTORED VERT. LOAD LC1 (PLF) FROM | TO | MAX CSI (LC) | MAX. UNBRAC LENGTH |
|---|---|---|---|---|---|
| X- A | -68 / 0 | 0.0 | 0.0 | 0.01 (1) | 7.81 |
| A- B | -10 / 0 | -77.7 | -77.7 | 0.04 (1) | 10.00 |
| B- C | -6 / 0 | -77.7 | -77.7 | 0.04 (1) | 10.00 |
| C- D | -2 / 0 | -77.7 | -77.7 | 0.03 (1) | 10.00 |
| D- E | -2 / 3 | -77.7 | -77.7 | 0.04 (1) | 10.00 |
| E- F | -1 / 5 | -77.7 | -77.7 | 0.04 (1) | 10.00 |
| F- G | -1 / 5 | -77.7 | -77.7 | 0.04 (1) | 10.00 |
| G- H | -2 / 3 | -77.7 | -77.7 | 0.04 (1) | 10.00 |
| H- I | -3 / 0 | -77.7 | -77.7 | 0.04 (1) | 10.00 |
| I- J | -3 / 0 | -77.7 | -77.7 | 0.04 (1) | 10.00 |
| J- K | -33 / 0 | -77.7 | -77.7 | 0.08 (1) | 6.25 |
| K- L | 0 / 24 | -77.7 | -77.7 | 0.10 (1) | 10.00 |
| M- K | -198 / 0 | 0.0 | 0.0 | 0.03 (1) | 7.81 |
| X- W | 0 / 13 | -39.5 | -39.5 | 0.03 (2) | 10.00 |
| W- V | 0 / 5 | -39.5 | -39.5 | 0.03 (2) | 10.00 |
| V- U | 0 / 2 | -39.5 | -39.5 | 0.02 (3) | 10.00 |
| U- T | -3 / 2 | -39.5 | -39.5 | 0.02 (3) | 10.00 |
| T- S | -5 / 1 | -39.5 | -39.5 | 0.02 (3) | 10.00 |
| S- R | -5 / 1 | -39.5 | -39.5 | 0.02 (3) | 10.00 |
| R- Q | -5 / 1 | -39.5 | -39.5 | 0.02 (3) | 10.00 |
| Q- P | -3 / 2 | -39.5 | -39.5 | 0.02 (3) | 10.00 |
| P- O | 0 / 2 | -39.5 | -39.5 | 0.03 (3) | 10.00 |
| O- N | 0 / 5 | -39.5 | -39.5 | 0.03 (3) | 10.00 |
| N- M | 0 / 7 | -39.5 | -39.5 | 0.03 (1) | 10.00 |

WEBS

| MEMB. FR-TO | MAX. FACTORED FORCE (LBS) | MAX CSI (LC) |
|---|---|---|
| R- F | -165 / 0 | 0.08 (1) |
| T- E | -158 / 0 | 0.05 (1) |
| U- D | -153 / 0 | 0.03 (1) |
| V- C | -152 / 0 | 0.02 (1) |
| W- B | -157 / 0 | 0.02 (1) |
| Q- G | -158 / 0 | 0.05 (1) |
| P- H | -151 / 0 | 0.03 (1) |
| O- I | -164 / 0 | 0.03 (1) |
| N- J | -45 / 0 | 0.01 (1) |

LICENSED PROFESSIONAL ENGINEER
H. J. G. ALVES
100009974
PROVINCE OF ONTARIO

**DESIGN CRITERIA**

SPECIFIED LOADS:

| | | | | |
|---|---|---|---|---|
| TOP CH. | LL | = | 20.9 | PSF |
| | DL | = | 6.0 | PSF |
| BOT CH. | LL | = | 10.5 | PSF |
| | DL | = | 7.4 | PSF |
| TOTAL LOAD | | = | 44.8 | PSF |

**SPACING = 24.0 IN. C/C**

THIS TRUSS IS DESIGNED FOR RESIDENTIAL OR SMALL BUILDING REQUIREMENTS OF PART 9, NBCC 2010, NBCC 2015

THIS DESIGN COMPLIES WITH:
- PART 9 OF BCBC 2018 , OBC 2012
- CSA 086-09, CSA 086-14
- TPIC 2011, TPIC 2014

DESIGN ASSUMPTIONS
-OVERHANG NOT TO BE ALTERED OR CUT OFF.

(60 % OF 20.9 P.S.F. G.S.L. PLUS 8.4 P.S.F. RAIN LOAD) EQUALS 20.9 P.S.F. SPECIFIED ROOF LIVE LOAD

CSI: TC=0.10/1.00 (K-L:1) , BC=0.03/1.00 (W-X:2) , WB=0.08/1.00 (F-R:1) , SSI=0.07/1.00 (K-L:1)

DOL LUMBER=1.00 NAIL=1.00 LS BEND=1.10 COMP=1.10 SHEAR=1.10 TENS= 1.10

COMPANION LIVE LOAD FACTOR = 1.00

TRUSS PLATE MANUFACTURER IS NOT RESPONSIBLE FOR QUALITY CONTROL IN THE TRUSS MANUFACTURING PLANT .

NAIL VALUES

| PLATE | GRIP(DRY) (PSI) MAX | MIN | SHEAR (PLI) MAX | MIN | SECTION (PLI) MAX | MIN |
|---|---|---|---|---|---|---|
| MT20 | 618 | 354 | 1667 | 788 | 1987 | 1656 |

PLATE PLACEMENT TOL. = 0.250 inches

PLATE ROTATION TOL. = 5.0 Deg.

JSI GRIP= 0.40 (G) (INPUT = 0.90 )
JSI METAL= 0.07 (I) (INPUT = 1.00 )

DWG NO. TAM 7190 4079
STRUCTURAL
COMPONENT ONLY

| JOB NAME | TRUSS NAME | QUANTITY | PLY | JOB DESC. CONDO BLOCK 1UNITS 1- 3 | DRWG NO. |
|---|---|---|---|---|---|
| 401458 | T6 | 2 | 1 | TRUSS DESC. | |

Tamarack Roof Truss, Burlington

Version 8.230 S Nov 17 2018 MiTek Industries, Inc. Fri Feb 22 07:51:50 2019 Page 1

ID:_YsKd95knv21l1np5yhk1ZySw5f-4dff52Hbo?CusHsleKGMPOVoCWPl_KluRACcGkzifoN

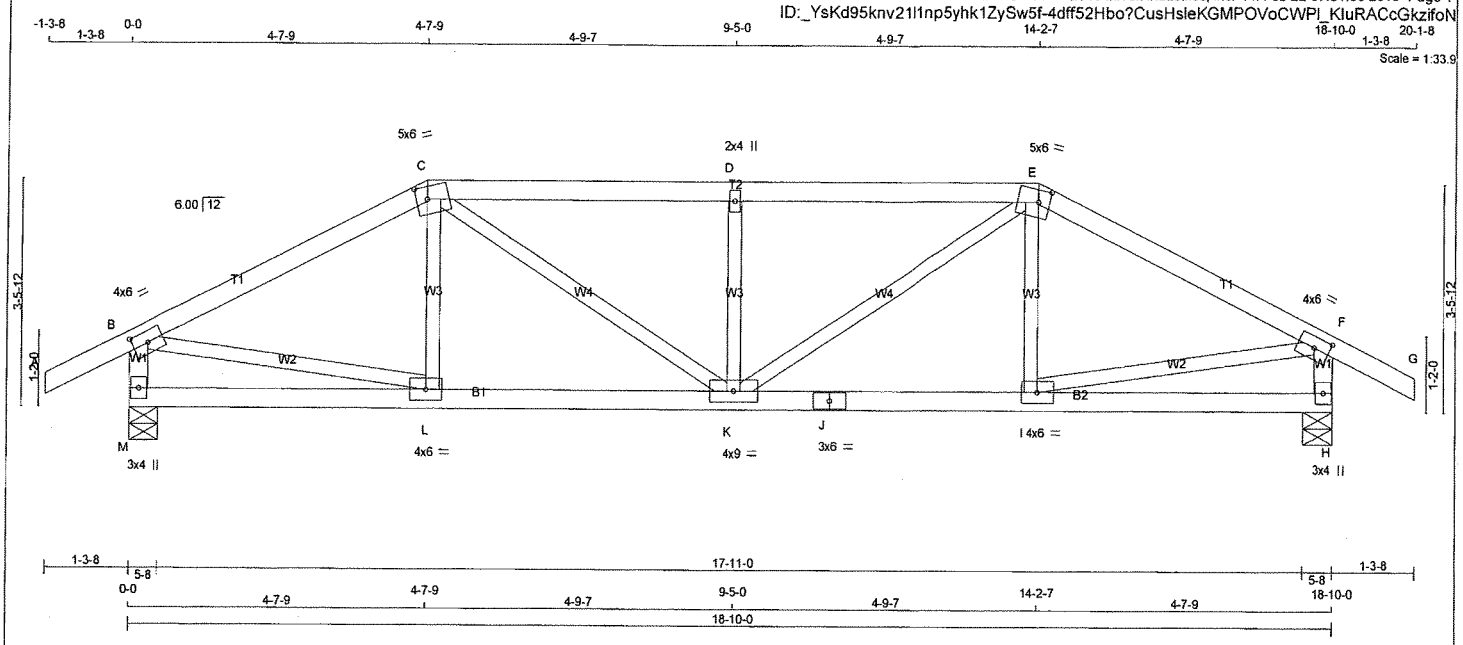


TOTAL WEIGHT = 2 X 72 = 145 lb

[M]

**LUMBER**

N. L. G. A. RULES

| CHORDS | SIZE | | LUMBER | DESCR. |
|---|---|---|---|---|
| A - C | 2x4 | DRY | No.2 | SPF |
| C - E | 2x4 | DRY | No.2 | SPF |
| E - G | 2x4 | DRY | No.2 | SPF |
| M - B | 2x4 | DRY | No.2 | SPF |
| H - F | 2x4 | DRY | No.2 | SPF |
| M - J | 2x4 | DRY | No.2 | SPF |
| J - H | 2x4 | DRY | No.2 | SPF |
| ALL WEBS EXCEPT | 2x3 | DRY | No.2 | SPF |

DRY: SEASONED LUMBER.

**PLATES (table is in inches)**

| JT | TYPE | PLATES | W | LEN | Y | X |
|---|---|---|---|---|---|---|
| B | TMVW-t | MT20 | 4.0 | 6.0 | 2.00 | 3.00 |
| C | TTWW-m | MT20 | 5.0 | 6.0 | 2.25 | 2.00 |
| D | TMW+w | MT20 | 2.0 | 4.0 | | |
| E | TTWW-m | MT20 | 5.0 | 6.0 | 2.25 | 2.00 |
| F | TMVW-t | MT20 | 4.0 | 6.0 | 2.00 | 3.00 |
| H | BMV1+p | MT20 | 3.0 | 4.0 | | |
| I | BMWW-t | MT20 | 4.0 | 6.0 | | |
| J | BS-t | MT20 | 3.0 | 6.0 | | |
| K | BMWWW-t | MT20 | 4.0 | 9.0 | | |
| L | BMWW-t | MT20 | 4.0 | 6.0 | | |
| M | BMV1+p | MT20 | 3.0 | 4.0 | | |

**DIMENSIONS, SUPPORTS AND LOADINGS SPECIFIED BY FABRICATOR TO BE VERIFIED BY BUILDING DESIGNER**

**BEARINGS**

| JT | FACTORED GROSS REACTION VERT | HORZ | MAXIMUM FACTORED GROSS REACTION DOWN | HORZ | UPLIFT | INPUT BRG IN-SX | REQRD BRG IN-SX |
|---|---|---|---|---|---|---|---|
| M | 1209 | 0 | 1209 | 0 | 0 | 5-8 | 5-8 |
| H | 1209 | 0 | 1209 | 0 | 0 | 5-8 | 5-8 |

**UNFACTORED REACTIONS**

MAX./MIN. COMPONENT REACTIONS

| JT | 1ST LCASE COMBINED | SNOW | LIVE | PERM.LIVE | WIND | DEAD | SOIL |
|---|---|---|---|---|---|---|---|
| M | 917 | 450 / 0 | 198 / 0 | 0 / 0 | 0 / 0 | 269 / 0 | 0 / 0 |
| H | 917 | 450 / 0 | 198 / 0 | 0 / 0 | 0 / 0 | 269 / 0 | 0 / 0 |

BEARING MATERIAL TO BE SPF NO.2 OR BETTER AT JOINT(S) M, H

**BRACING**

TOP CHORD TO BE SHEATHED OR MAX. PURLIN SPACING = 4.72 FT.
MAX. UNBRACED BOTTOM CHORD LENGTH = 10.00 FT OR RIGID CEILING DIRECTLY APPLIED.

ALL PITCH BREAKS AND PERIMETER CORNER JOINTS MUST BE LATERALLY RESTRAINED.

**LOADING**

TOTAL LOAD CASES: (4)

CHORDS

| MEMB. FR-TO | MAX. FACTORED FORCE (LBS) | FACTORED VERT. LOAD (PLF) FROM | TO | LC1 | MAX CSI (LC) | MAX. UNBRAC LENGTH |
|---|---|---|---|---|---|---|
| A- B | 0 / 24 | -77.7 | -77.7 | 0.10 | (1) | 10.00 |
| B- C | -1390 / 0 | -77.7 | -77.7 | 0.33 | (1) | 5.13 |
| C- D | -1707 / 0 | -77.7 | -77.7 | 0.34 | (1) | 4.72 |
| D- E | -1707 / 0 | -77.7 | -77.7 | 0.34 | (1) | 4.72 |
| E- F | -1390 / 0 | -77.7 | -77.7 | 0.33 | (1) | 5.13 |
| F- G | 0 / 24 | -77.7 | -77.7 | 0.10 | (1) | 10.00 |
| M- B | -1134 / 0 | 0.0 | 0.0 | 0.11 | (1) | 7.46 |
| H- F | -1134 / 0 | 0.0 | 0.0 | 0.11 | (1) | 7.46 |
| M- L | 0 / 0 | -39.5 | -39.5 | 0.17 | (3) | 10.00 |
| L- K | 0 / 1242 | -39.5 | -39.5 | 0.33 | (2) | 10.00 |
| K- J | 0 / 1242 | -39.5 | -39.5 | 0.33 | (2) | 10.00 |
| J- I | 0 / 1242 | -39.5 | -39.5 | 0.33 | (2) | 10.00 |
| I- H | 0 / 0 | -39.5 | -39.5 | 0.17 | (3) | 10.00 |

WEBS

| MEMB. FR-TO | MAX. FACTORED FORCE (LBS) | MAX CSI (LC) |
|---|---|---|
| L- C | -13 / 140 | 0.03 (3) |
| C- K | 0 / 559 | 0.13 (1) |
| K- D | -450 / 0 | 0.09 (1) |
| K- E | 0 / 559 | 0.13 (1) |
| I- E | -13 / 140 | 0.03 (3) |
| B- L | 0 / 1262 | 0.28 (1) |
| I- F | 0 / 1262 | 0.28 (1) |

LICENSED PROFESSIONAL ENGINEER
02/22/19
H. J. G ALVES
100109094
PROVINCE OF ONTARIO

**DESIGN CRITERIA**

SPECIFIED LOADS:

| | | | | |
|---|---|---|---|---|
| TOP CH. | LL = | 20.9 | PSF |
| | DL = | 6.0 | PSF |
| BOT CH. | LL = | 10.5 | PSF |
| | DL = | 7.4 | PSF |
| TOTAL LOAD | = | 44.8 | PSF |

**SPACING = 24.0 IN. C/C**

LOADING IN FLAT SECTION BASED ON A SLOPE OF 2.00/12 MINIMUM

THIS TRUSS IS DESIGNED FOR RESIDENTIAL OR SMALL BUILDING REQUIREMENTS OF PART 9, NBCC 2010, NBCC 2015

THIS DESIGN COMPLIES WITH:
- PART 9 OF BCBC 2018 , OBC 2012
- CSA 086-09, CSA 086-14
- TPIC 2011, TPIC 2014

(60 % OF 20.9 P.S.F. G.S.L. PLUS 8.4 P.S.F. RAIN LOAD) EQUALS 20.9 P.S.F. SPECIFIED ROOF LIVE LOAD

ALLOWABLE DEFL.(LL)= L/360 (0.63")
CALCULATED VERT. DEFL.(LL) = L/ 999 (0.05")
ALLOWABLE DEFL.(TL)= L/360 (0.63")
CALCULATED VERT. DEFL.(TL) = L/ 999 (0.09")

CSI: TC=0.34/1.00 (C-D:1) , BC=0.33/1.00 (I-K:2) , WB=0.28/1.00 (F-I:1) , SSI=0.18/1.00 (C-D:1)

DOL LUMBER=1.00 NAIL=1.00 LS BEND=1.10 COMP=1.10 SHEAR=1.10 TENS= 1.10

COMPANION LIVE LOAD FACTOR = 1.00

TRUSS PLATE MANUFACTURER IS NOT RESPONSIBLE FOR QUALITY CONTROL IN THE TRUSS MANUFACTURING PLANT .

NAIL VALUES

| PLATE | GRIP(DRY) (PSI) MAX | MIN | SHEAR (PLI) MAX | MIN | SECTION (PLI) MAX | MIN |
|---|---|---|---|---|---|---|
| MT20 | 618 | 354 | 1667 | 788 | 1987 | 1656 |

PLATE PLACEMENT TOL. = 0.250 inches

PLATE ROTATION TOL. = 5.0 Deg.

JSI GRIP= 0.80 (L) (INPUT = 0.90 )
JSI METAL= 0.44 (J) (INPUT = 1.00 )

DWG NO. TAM 7904080
STRUCTURAL
COMPONENT ONLY

| JOB NAME | TRUSS NAME | QUANTITY | PLY | JOB DESC. | DRWG NO. |
|---|---|---|---|---|---|
| 401458 | T7 | 2 | 1 | CONDO BLOCK 1UNITS 1- 3<br>TRUSS DESC. | |

Tamarack Roof Truss, Burlington

Version 8.230 S Nov 17 2018 MiTek Industries, Inc. Fri Feb 22 07:51:51 2019 Page 1

ID:_YsKd95knv21l1np5yhk1ZySw5f-YpD1IOIEZJKIURRyC1nbyc20LwhZjj31gqxAoBzifoM

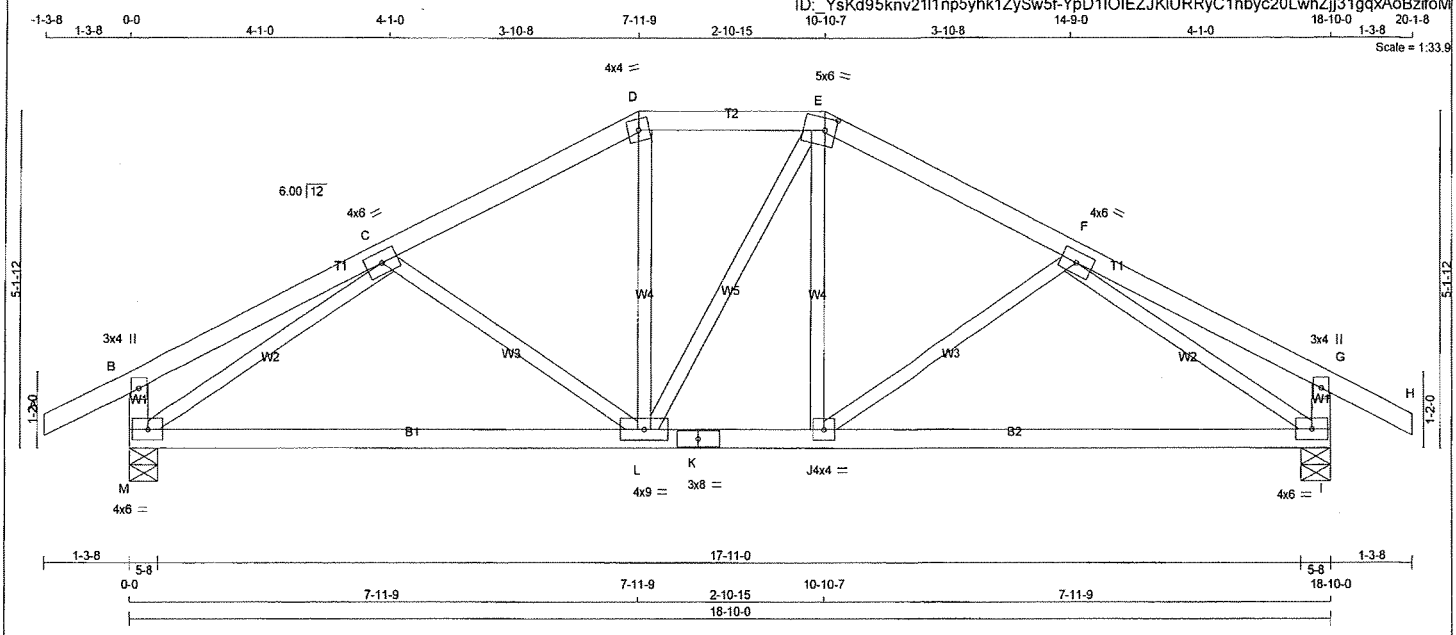


TOTAL WEIGHT = 2 X 77 = 154 lb

[M][F]

**LUMBER**

N. L. G. A. RULES

| CHORDS | SIZE | | LUMBER | DESCR. |
|---|---|---|---|---|
| A - D | 2x4 | DRY | No.2 | SPF |
| D - E | 2x4 | DRY | No.2 | SPF |
| E - H | 2x4 | DRY | No.2 | SPF |
| M - B | 2x4 | DRY | No.2 | SPF |
| I - G | 2x4 | DRY | No.2 | SPF |
| M - K | 2x4 | DRY | No.2 | SPF |
| K - I | 2x4 | DRY | No.2 | SPF |
| ALL WEBS EXCEPT | 2x3 | DRY | No.2 | SPF |

DRY: SEASONED LUMBER.

**PLATES (table is in inches)**

| JT | TYPE | PLATES | W | LEN | Y | X |
|---|---|---|---|---|---|---|
| B | TMV+p | MT20 | 3.0 | 4.0 | | |
| C | TMWW-t | MT20 | 4.0 | 6.0 | | |
| D | TTW-m | MT20 | 4.0 | 4.0 | | |
| E | TTWW-m | MT20 | 5.0 | 6.0 | 2.25 | 2.00 |
| F | TMWW-t | MT20 | 4.0 | 6.0 | | |
| G | TMV+p | MT20 | 3.0 | 4.0 | | |
| I | BMVW1-t | MT20 | 4.0 | 6.0 | | |
| J | BMWW-t | MT20 | 4.0 | 4.0 | | |
| K | BS-t | MT20 | 3.0 | 8.0 | | |
| L | BMWWW-t | MT20 | 4.0 | 9.0 | | |
| M | BMVW1-t | MT20 | 4.0 | 6.0 | | |

**DIMENSIONS, SUPPORTS AND LOADINGS SPECIFIED BY FABRICATOR TO BE VERIFIED BY BUILDING DESIGNER**

**BEARINGS**

| JT | FACTORED GROSS REACTION VERT | HORZ | MAXIMUM FACTORED GROSS REACTION DOWN | HORZ | UPLIFT | INPUT BRG IN-SX | REQRD BRG IN-SX |
|---|---|---|---|---|---|---|---|
| M | 1209 | 0 | 1209 | 0 | 0 | 5-8 | 5-8 |
| I | 1209 | 0 | 1209 | 0 | 0 | 5-8 | 5-8 |

**UNFACTORED REACTIONS**

| JT | 1ST LCASE COMBINED | MAX./MIN. COMPONENT REACTIONS SNOW | LIVE | PERM.LIVE | WIND | DEAD | SOIL |
|---|---|---|---|---|---|---|---|
| M | 917 | 450 / 0 | 198 / 0 | 0 / 0 | 0 / 0 | 269 / 0 | 0 / 0 |
| I | 917 | 450 / 0 | 198 / 0 | 0 / 0 | 0 / 0 | 269 / 0 | 0 / 0 |

BEARING MATERIAL TO BE SPF NO.2 OR BETTER AT JOINT(S) M, I

**BRACING**

TOP CHORD TO BE SHEATHED OR MAX. PURLIN SPACING = 5.63 FT.
MAX. UNBRACED BOTTOM CHORD LENGTH = 10.00 FT OR RIGID CEILING DIRECTLY APPLIED.

ALL PITCH BREAKS AND PERIMETER CORNER JOINTS MUST BE LATERALLY RESTRAINED.

**LOADING**

TOTAL LOAD CASES: (4)

| CHORDS MEMB. FR-TO | MAX. FACTORED FORCE (LBS) | FACTORED VERT. LOAD (PLF) FROM | TO | LC1 MAX CSI (LC) | MAX. UNBRAC LENGTH |
|---|---|---|---|---|---|
| A- B | 0 / 24 | -77.7 | -77.7 | 0.10 (1) | 10.00 |
| B- C | 0 / 15 | -77.7 | -77.7 | 0.18 (1) | 10.00 |
| C- D | -1229 / 0 | -77.7 | -77.7 | 0.16 (1) | 5.63 |
| D- E | -1092 / 0 | -77.7 | -77.7 | 0.10 (1) | 5.96 |
| E- F | -1228 / 0 | -77.7 | -77.7 | 0.16 (1) | 5.63 |
| F- G | 0 / 15 | -77.7 | -77.7 | 0.18 (1) | 10.00 |
| G- H | 0 / 24 | -77.7 | -77.7 | 0.10 (1) | 10.00 |
| M- B | -228 / 0 | 0.0 | 0.0 | 0.02 (1) | 7.81 |
| I- G | -228 / 0 | 0.0 | 0.0 | 0.02 (1) | 7.81 |
| M- L | 0 / 1187 | -39.5 | -39.5 | 0.55 (2) | 10.00 |
| L- K | 0 / 1091 | -39.5 | -39.5 | 0.53 (2) | 10.00 |
| K- J | 0 / 1091 | -39.5 | -39.5 | 0.53 (2) | 10.00 |
| J- I | 0 / 1187 | -39.5 | -39.5 | 0.55 (2) | 10.00 |

| WEBS MEMB. FR-TO | MAX. FACTORED FORCE (LBS) | MAX CSI (LC) |
|---|---|---|
| C- L | -125 / 56 | 0.05 (1) |
| L- D | 0 / 333 | 0.07 (2) |
| L- E | 0 / 2 | 0.00 (2) |
| J- E | 0 / 331 | 0.07 (2) |
| J- F | -125 / 56 | 0.05 (1) |
| M- C | -1459 / 0 | 0.57 (1) |
| F- I | -1459 / 0 | 0.57 (1) |

LICENSED PROFESSIONAL ENGINEER
02/22/19
H J G ALVES
100009024
PROVINCE OF ONTARIO

**DESIGN CRITERIA**

SPECIFIED LOADS:

| | | | | |
|---|---|---|---|---|
| TOP CH. | LL | = | 20.9 | PSF |
| | DL | = | 6.0 | PSF |
| BOT CH. | LL | = | 10.5 | PSF |
| | DL | = | 7.4 | PSF |
| TOTAL LOAD | | = | 44.8 | PSF |

**SPACING = 24.0 IN. C/C**

LOADING IN FLAT SECTION BASED ON A SLOPE OF 2.00/12 MINIMUM

THIS TRUSS IS DESIGNED FOR RESIDENTIAL OR SMALL BUILDING REQUIREMENTS OF PART 9, NBCC 2010, NBCC 2015

THIS DESIGN COMPLIES WITH:
- PART 9 OF BCBC 2018 , OBC 2012
- CSA 086-09, CSA 086-14
- TPIC 2011, TPIC 2014

(60 % OF 20.9 P.S.F. G.S.L. PLUS 8.4 P.S.F. RAIN LOAD) EQUALS 20.9 P.S.F. SPECIFIED ROOF LIVE LOAD

ALLOWABLE DEFL.(LL)= L/360 (0.63")
CALCULATED VERT. DEFL.(LL) = L/ 999 (0.18")
ALLOWABLE DEFL.(TL)= L/360 (0.63")
CALCULATED VERT. DEFL.(TL) = L/ 742 (0.30")

CSI: TC=0.18/1.00 (F-G:1) , BC=0.55/1.00 (I-J:2) , WB=0.57/1.00 (C-M:1) , SSI=0.20/1.00 (L-M:3)

DOL LUMBER=1.00 NAIL=1.00 LS BEND=1.10 COMP=1.10 SHEAR=1.10 TENS= 1.10

COMPANION LIVE LOAD FACTOR = 1.00

TRUSS PLATE MANUFACTURER IS NOT RESPONSIBLE FOR QUALITY CONTROL IN THE TRUSS MANUFACTURING PLANT .

NAIL VALUES

| PLATE | GRIP(DRY) (PSI) MAX | MIN | SHEAR (PLI) MAX | MIN | SECTION (PLI) MAX | MIN |
|---|---|---|---|---|---|---|
| MT20 | 618 | 354 | 1667 | 788 | 1987 | 1656 |

PLATE PLACEMENT TOL. = 0.250 inches

PLATE ROTATION TOL. = 5.0 Deg.

JSI GRIP= 0.89 (K) (INPUT = 0.90 )
JSI METAL= 0.91 (K) (INPUT = 1.00 )

DWG NO. TAM 17904081
STRUCTURAL
COMPONENT ONLY

| JOB NAME | TRUSS NAME | QUANTITY | PLY | JOB DESC. CONDO BLOCK 1UNITS 1- 3 | DRWG NO. |
|---|---|---|---|---|---|
| 401458 | T8 | 5 | 1 | TRUSS DESC. | |

Tamarack Roof Truss, Burlington

Version 8.230 S Nov 17 2018 MiTek Industries, Inc. Fri Feb 22 07:51:52 2019 Page 1
ID:_YsKd95knv21l1np5yhk1ZySw5f-00mPWkJsKdSc6a08lllqUpb9mK3fS6YAvUhjKdzifoL

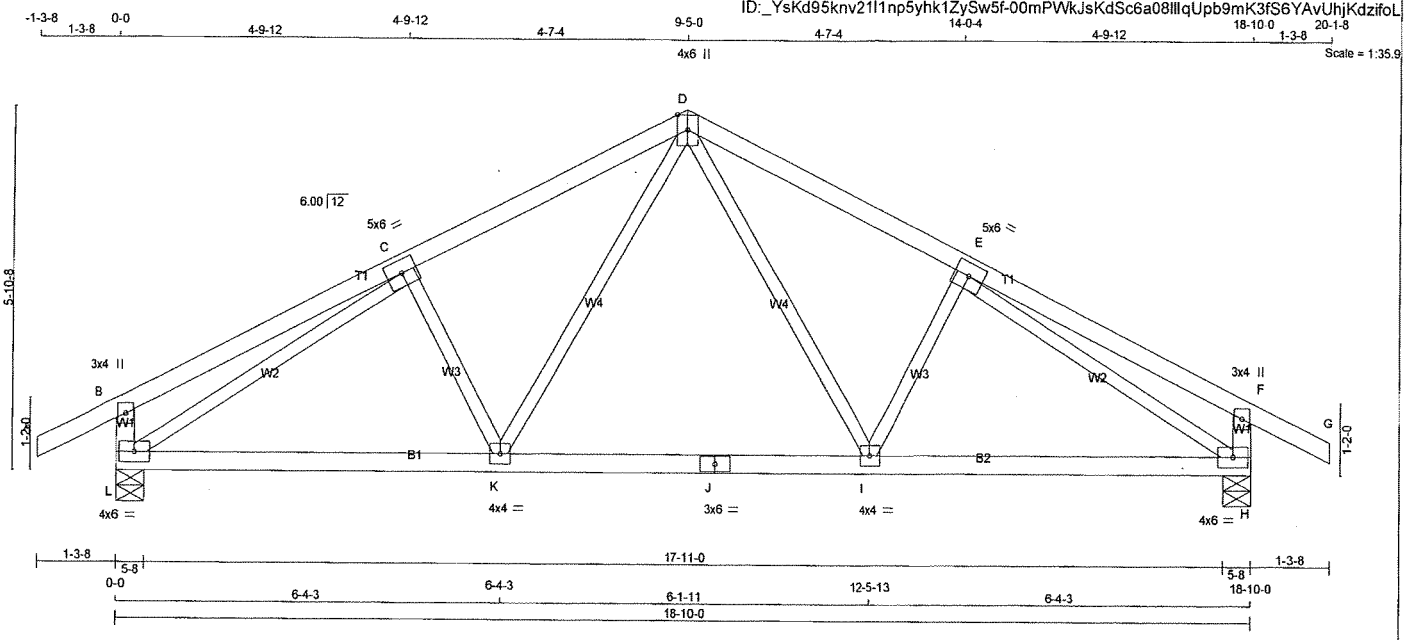


TOTAL WEIGHT = 5 X 75 = 373 lb
[M][F]

**LUMBER**
N. L. G. A. RULES

| CHORDS | SIZE | | LUMBER | DESCR. |
|---|---|---|---|---|
| A - D | 2x4 | DRY | No.2 | SPF |
| D - G | 2x4 | DRY | No.2 | SPF |
| L - B | 2x4 | DRY | No.2 | SPF |
| H - F | 2x4 | DRY | No.2 | SPF |
| L - J | 2x4 | DRY | No.2 | SPF |
| J - H | 2x4 | DRY | No.2 | SPF |
| ALL WEBS EXCEPT | 2x3 | DRY | No.2 | SPF |

DRY: SEASONED LUMBER.

**PLATES (table is in inches)**

| JT | TYPE | PLATES | W | LEN | Y | X |
|---|---|---|---|---|---|---|
| B | TMV+p | MT20 | 3.0 | 4.0 | | |
| C | TMWW-t | MT20 | 5.0 | 6.0 | | |
| D | TTWW+p | MT20 | 4.0 | 6.0 | Edge | |
| E | TMWW-t | MT20 | 5.0 | 6.0 | | |
| F | TMV+p | MT20 | 3.0 | 4.0 | | |
| H | BMVW1-t | MT20 | 4.0 | 6.0 | | |
| I | BMWW-t | MT20 | 4.0 | 4.0 | | |
| J | BS-t | MT20 | 3.0 | 6.0 | | |
| K | BMWW-t | MT20 | 4.0 | 4.0 | | |
| L | BMVW1-t | MT20 | 4.0 | 6.0 | | |

Edge - INDICATES REFERENCE CORNER OF PLATE TOUCHES EDGE OF CHORD.

**DIMENSIONS, SUPPORTS AND LOADINGS SPECIFIED BY FABRICATOR TO BE VERIFIED BY BUILDING DESIGNER**

**BEARINGS**

| JT | FACTORED GROSS REACTION VERT | HORZ | MAXIMUM FACTORED GROSS REACTION DOWN | HORZ | UPLIFT | INPUT BRG IN-SX | REQRD BRG IN-SX |
|---|---|---|---|---|---|---|---|
| L | 1209 | 0 | 1209 | 0 | 0 | 5-8 | 5-8 |
| H | 1209 | 0 | 1209 | 0 | 0 | 5-8 | 5-8 |

**UNFACTORED REACTIONS**

| JT | 1ST LCASE COMBINED | MAX./MIN. COMPONENT REACTIONS SNOW | LIVE | PERM.LIVE | WIND | DEAD | SOIL |
|---|---|---|---|---|---|---|---|
| L | 917 | 450 / 0 | 198 / 0 | 0 / 0 | 0 / 0 | 269 / 0 | 0 / 0 |
| H | 917 | 450 / 0 | 198 / 0 | 0 / 0 | 0 / 0 | 269 / 0 | 0 / 0 |

BEARING MATERIAL TO BE SPF NO.2 OR BETTER AT JOINT(S) L, H

**BRACING**
TOP CHORD TO BE SHEATHED OR MAX. PURLIN SPACING = 5.38 FT.
MAX. UNBRACED BOTTOM CHORD LENGTH = 10.00 FT OR RIGID CEILING DIRECTLY APPLIED.

ALL PITCH BREAKS AND PERIMETER CORNER JOINTS MUST BE LATERALLY RESTRAINED.

**LOADING**
TOTAL LOAD CASES: (4)

CHORDS

| MEMB. FR-TO | MAX. FACTORED FORCE (LBS) | FACTORED VERT. LOAD (PLF) FROM | TO | LC1 MAX CSI (LC) | MAX. UNBRAC LENGTH |
|---|---|---|---|---|---|
| A- B | 0 / 24 | -77.7 | -77.7 | 0.10 (1) | 10.00 |
| B- C | 0 / 18 | -77.7 | -77.7 | 0.27 (1) | 10.00 |
| C- D | -1327 / 0 | -77.7 | -77.7 | 0.23 (1) | 5.38 |
| D- E | -1327 / 0 | -77.7 | -77.7 | 0.23 (1) | 5.38 |
| E- F | 0 / 18 | -77.7 | -77.7 | 0.27 (1) | 10.00 |
| F- G | 0 / 24 | -77.7 | -77.7 | 0.10 (1) | 10.00 |
| L- B | -247 / 0 | 0.0 | 0.0 | 0.02 (1) | 7.81 |
| H- F | -247 / 0 | 0.0 | 0.0 | 0.02 (1) | 7.81 |
| L- K | 0 / 1259 | -39.5 | -39.5 | 0.43 (2) | 10.00 |
| K- J | 0 / 926 | -39.5 | -39.5 | 0.39 (2) | 10.00 |
| J- I | 0 / 926 | -39.5 | -39.5 | 0.39 (2) | 10.00 |
| I- H | 0 / 1259 | -39.5 | -39.5 | 0.43 (2) | 10.00 |

WEBS

| MEMB. FR-TO | MAX. FACTORED FORCE (LBS) | MAX CSI (LC) |
|---|---|---|
| D- I | 0 / 506 | 0.11 (1) |
| I- E | -196 / 34 | 0.05 (1) |
| K- D | 0 / 506 | 0.11 (1) |
| C- K | -196 / 34 | 0.05 (1) |
| L- C | -1524 / 0 | 0.81 (1) |
| E- H | -1524 / 0 | 0.81 (1) |

LICENSED PROFESSIONAL ENGINEER
02/22/19
H. J. G. ALVES
100009020
PROVINCE OF ONTARIO

**DESIGN CRITERIA**

SPECIFIED LOADS:

| | | | | |
|---|---|---|---|---|
| TOP CH. | LL | = | 20.9 | PSF |
| | DL | = | 6.0 | PSF |
| BOT CH. | LL | = | 10.5 | PSF |
| | DL | = | 7.4 | PSF |
| TOTAL LOAD | | = | 44.8 | PSF |

**SPACING = 24.0 IN. C/C**

THIS TRUSS IS DESIGNED FOR RESIDENTIAL OR SMALL BUILDING REQUIREMENTS OF PART 9, NBCC 2010, NBCC 2015

THIS DESIGN COMPLIES WITH:
- PART 9 OF BCBC 2018 , OBC 2012
- CSA 086-09, CSA 086-14
- TPIC 2011, TPIC 2014

(60 % OF 20.9 P.S.F. G.S.L. PLUS 8.4 P.S.F. RAIN LOAD) EQUALS 20.9 P.S.F. SPECIFIED ROOF LIVE LOAD

ALLOWABLE DEFL.(LL)= L/360 (0.63")
CALCULATED VERT. DEFL.(LL) = L/ 999 (0.07")
ALLOWABLE DEFL.(TL)= L/360 (0.63")
CALCULATED VERT. DEFL.(TL) = L/ 999 (0.13")

CSI: TC=0.27/1.00 (E-F:1) , BC=0.43/1.00 (H-I:2) , WB=0.81/1.00 (E-H:1) , SSI=0.16/1.00 (H-I:3)

DOL LUMBER=1.00 NAIL=1.00 LS BEND=1.10 COMP=1.10 SHEAR=1.10 TENS= 1.10

COMPANION LIVE LOAD FACTOR = 1.00

TRUSS PLATE MANUFACTURER IS NOT RESPONSIBLE FOR QUALITY CONTROL IN THE TRUSS MANUFACTURING PLANT .

NAIL VALUES

| PLATE | GRIP(DRY) (PSI) MAX | MIN | SHEAR (PLI) MAX | MIN | SECTION (PLI) MAX | MIN |
|---|---|---|---|---|---|---|
| MT20 | 618 | 354 | 1667 | 788 | 1987 | 1656 |

PLATE PLACEMENT TOL. = 0.250 inches

PLATE ROTATION TOL. = 5.0 Deg.

JSI GRIP= 0.80 (L) (INPUT = 0.90 )
JSI METAL= 0.38 (C) (INPUT = 1.00 )

DWG NO. TAM 7190408 2
STRUCTURAL
COMPONENT ONLY

| JOB NAME | TRUSS NAME | QUANTITY | PLY | JOB DESC. | DRWG NO. |
|---|---|---|---|---|---|
| 401458 | T8X | 5 | 1 | CONDO BLOCK 1UNITS 1- 3<br>TRUSS DESC. | |

Tamarack Roof Truss, Burlington

Version 8.230 S Nov 17 2018 MiTek Industries, Inc. Fri Feb 22 07:51:53 2019 Page 1

ID:_YsKd95knv21l1np5yhk1ZySw5f-UCKnj4JU5waTjkaKJSp3117JejNPBYaK78QGs3zifoK

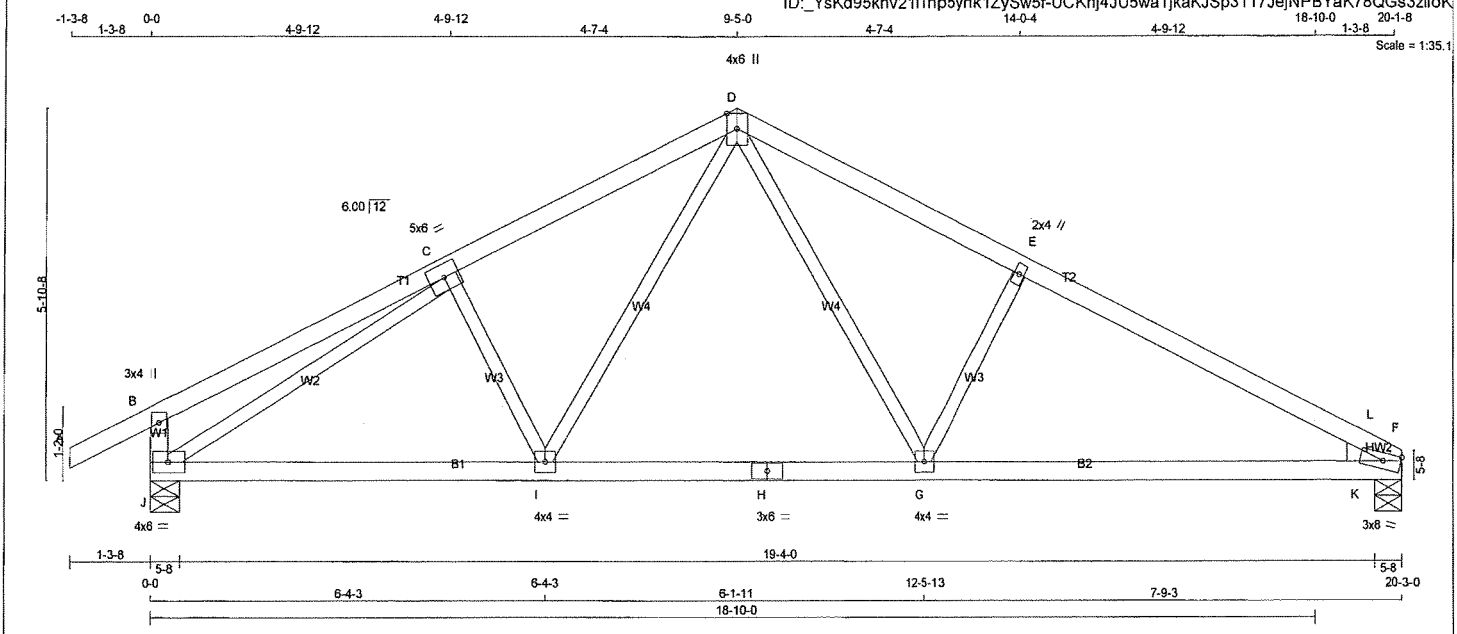


TOTAL WEIGHT = 5 X 72 = 360 lb

**LUMBER**

N. L. G. A. RULES

| CHORDS | SIZE | | LUMBER | DESCR. |
|---|---|---|---|---|
| A - D | 2x4 | DRY | No.2 | SPF |
| D - F | 2x4 | DRY | No.2 | SPF |
| J - B | 2x4 | DRY | No.2 | SPF |
| J - H | 2x4 | DRY | No.2 | SPF |
| H - F | 2x4 | DRY | No.2 | SPF |
| ALL WEBS EXCEPT | 2x3 | DRY | No.2 | SPF |

DRY: SEASONED LUMBER.

**PLATES (table is in inches)**

| JT | TYPE | PLATES | W | LEN | Y | X |
|---|---|---|---|---|---|---|
| B | TMV+p | MT20 | 3.0 | 4.0 | | |
| C | TMWW-t | MT20 | 5.0 | 6.0 | | |
| D | TTWW+p | MT20 | 4.0 | 6.0 | Edge | |
| E | TMW+w | MT20 | 2.0 | 4.0 | | |
| F | TBMH1-m | MT20 | 3.0 | 8.0 | | Edge |
| G | BMWW-t | MT20 | 4.0 | 4.0 | | |
| H | BS-t | MT20 | 3.0 | 6.0 | | |
| I | BMWW-t | MT20 | 4.0 | 4.0 | | |
| J | BMVW1-t | MT20 | 4.0 | 6.0 | | |

Edge - INDICATES REFERENCE CORNER OF PLATE TOUCHES EDGE OF CHORD.

**DIMENSIONS, SUPPORTS AND LOADINGS SPECIFIED BY FABRICATOR TO BE VERIFIED BY BUILDING DESIGNER**

**BEARINGS**

| JT | FACTORED GROSS REACTION VERT | HORZ | MAXIMUM FACTORED GROSS REACTION DOWN | HORZ | UPLIFT | INPUT BRG IN-SX | REQRD BRG IN-SX | HEEL WEDGE |
|---|---|---|---|---|---|---|---|---|
| F | 1187 | 0 | 1187 | 0 | 0 | 5-8 | 5-8 | 2x4 R |
| J | 1292 | 0 | 1292 | 0 | 0 | 5-8 | 5-8 | |

**UNFACTORED REACTIONS**

| JT | 1ST LCASE COMBINED | MAX./MIN. COMPONENT REACTIONS SNOW | LIVE | PERM.LIVE | WIND | DEAD | SOIL |
|---|---|---|---|---|---|---|---|
| F | 907 | 423 / 0 | 213 / 0 | 0 / 0 | 0 / 0 | 271 / 0 | 0 / 0 |
| J | 980 | 480 / 0 | 213 / 0 | 0 / 0 | 0 / 0 | 288 / 0 | 0 / 0 |

BEARING MATERIAL TO BE SPF NO.2 OR BETTER AT JOINT(S) F, J

**BRACING**

TOP CHORD TO BE SHEATHED OR MAX. PURLIN SPACING = 4.67 FT.
MAX. UNBRACED BOTTOM CHORD LENGTH = 10.00 FT OR RIGID CEILING DIRECTLY APPLIED.

ALL PITCH BREAKS AND PERIMETER CORNER JOINTS MUST BE LATERALLY RESTRAINED.

**LOADING**

TOTAL LOAD CASES: (4)

CHORDS

| MEMB. FR-TO | MAX. FACTORED FORCE (LBS) | FACTORED VERT. LOAD (PLF) FROM | TO | LC1 | MAX CSI (LC) | MAX. UNBRAC LENGTH |
|---|---|---|---|---|---|---|
| A- B | 0 / 24 | -77.7 | -77.7 | 0.10 (1) | 10.00 | |
| B- C | 0 / 18 | -77.7 | -77.7 | 0.26 (1) | 10.00 | |
| C- D | -1470 / 0 | -77.7 | -77.7 | 0.23 (1) | 5.17 | |
| D- E | -1638 / 0 | -77.7 | -77.7 | 0.29 (1) | 4.88 | |
| E- L | -1813 / 0 | -77.7 | -77.7 | 0.32 (1) | 4.67 | |
| L- F | -2013 / 0 | -77.7 | -77.7 | 0.12 (3) | 4.75 | |
| J- B | -248 / 0 | 0.0 | 0.0 | 0.03 (1) | 7.81 | |
| J- I | 0 / 1379 | -39.5 | -39.5 | 0.44 (2) | 10.00 | |
| I- H | 0 / 1068 | -39.5 | -39.5 | 0.45 (2) | 10.00 | |
| H- G | 0 / 1068 | -39.5 | -39.5 | 0.45 (2) | 10.00 | |
| G- K | 0 / 1639 | -39.5 | -39.5 | 0.53 (2) | 10.00 | |
| K- F | 0 / 1639 | -39.5 | -39.5 | 0.31 (2) | 10.00 | |

WEBS

| MEMB. FR-TO | MAX. FACTORED FORCE (LBS) | MAX CSI (LC) |
|---|---|---|
| D- G | 0 / 779 | 0.18 (1) |
| G- E | -437 / 0 | 0.10 (1) |
| I- D | 0 / 477 | 0.11 (1) |
| C- I | -176 / 45 | 0.04 (1) |
| J- C | -1669 / 0 | 0.89 (1) |
| K- L | 0 / 314 | 0.00 (1) |

LICENSED PROFESSIONAL ENGINEER
02/22/19
H. J. G. ALVES
100009024
PROVINCE OF ONTARIO

[M][F]

**DESIGN CRITERIA**

SPECIFIED LOADS:

| | | | | |
|---|---|---|---|---|
| TOP CH. | LL | = | 20.9 | PSF |
| | DL | = | 6.0 | PSF |
| BOT CH. | LL | = | 10.5 | PSF |
| | DL | = | 7.4 | PSF |
| TOTAL LOAD | | = | 44.8 | PSF |

**SPACING = 24.0 IN. C/C**

THIS TRUSS IS DESIGNED FOR RESIDENTIAL OR SMALL BUILDING REQUIREMENTS OF PART 9, NBCC 2010, NBCC 2015

THIS DESIGN COMPLIES WITH:
- PART 9 OF BCBC 2018 , OBC 2012
- CSA 086-09, CSA 086-14
- TPIC 2011, TPIC 2014

(60 % OF 20.9 P.S.F. G.S.L. PLUS 8.4 P.S.F. RAIN LOAD) EQUALS 20.9 P.S.F. SPECIFIED ROOF LIVE LOAD

ALLOWABLE DEFL.(LL)= L/360 (0.68")
CALCULATED VERT. DEFL.(LL) = L/ 999 (0.11")
ALLOWABLE DEFL.(TL)= L/360 (0.68")
CALCULATED VERT. DEFL.(TL) = L/ 999 (0.19")

CSI: TC=0.32/1.00 (E-L:1) , BC=0.53/1.00 (G-K:2) , WB=0.89/1.00 (C-J:1) , SSI=0.18/1.00 (E-L:1)

DOL LUMBER=1.00 NAIL=1.00 LS BEND=1.10 COMP=1.10 SHEAR=1.10 TENS= 1.10

COMPANION LIVE LOAD FACTOR = 1.00

TRUSS PLATE MANUFACTURER IS NOT RESPONSIBLE FOR QUALITY CONTROL IN THE TRUSS MANUFACTURING PLANT .

NAIL VALUES

| PLATE | GRIP(DRY) (PSI) MAX | MIN | SHEAR (PLI) MAX | MIN | SECTION (PLI) MAX | MIN |
|---|---|---|---|---|---|---|
| MT20 | 618 | 354 | 1667 | 788 | 1987 | 1656 |

PLATE PLACEMENT TOL. = 0.250 inches

PLATE ROTATION TOL. = 5.0 Deg.

JSI GRIP= 0.90 (F) (INPUT = 0.90 )
JSI METAL= 0.41 (C) (INPUT = 1.00 )

DWG NO. TAM T1904083
STRUCTURAL
COMPONENT ONLY

| JOB NAME | TRUSS NAME | QUANTITY | PLY | JOB DESC. | DRWG NO. |
|---|---|---|---|---|---|
| 401458 | T10 | 1 | 1 | CONDO BLOCK 1UNITS 1- 3 | |
| | | | | TRUSS DESC. | |

Tamarack Roof Truss, Burlington

Version 8.230 S Nov 17 2018 MiTek Industries, Inc. Fri Feb 22 07:51:54 2019 Page 1

ID:_YsKd95knv21l1np5yhk1ZySw5f-yOu9xQK6sEjKLu9XtAKlaEgS77k6w5yTMoAqPWzifoJ

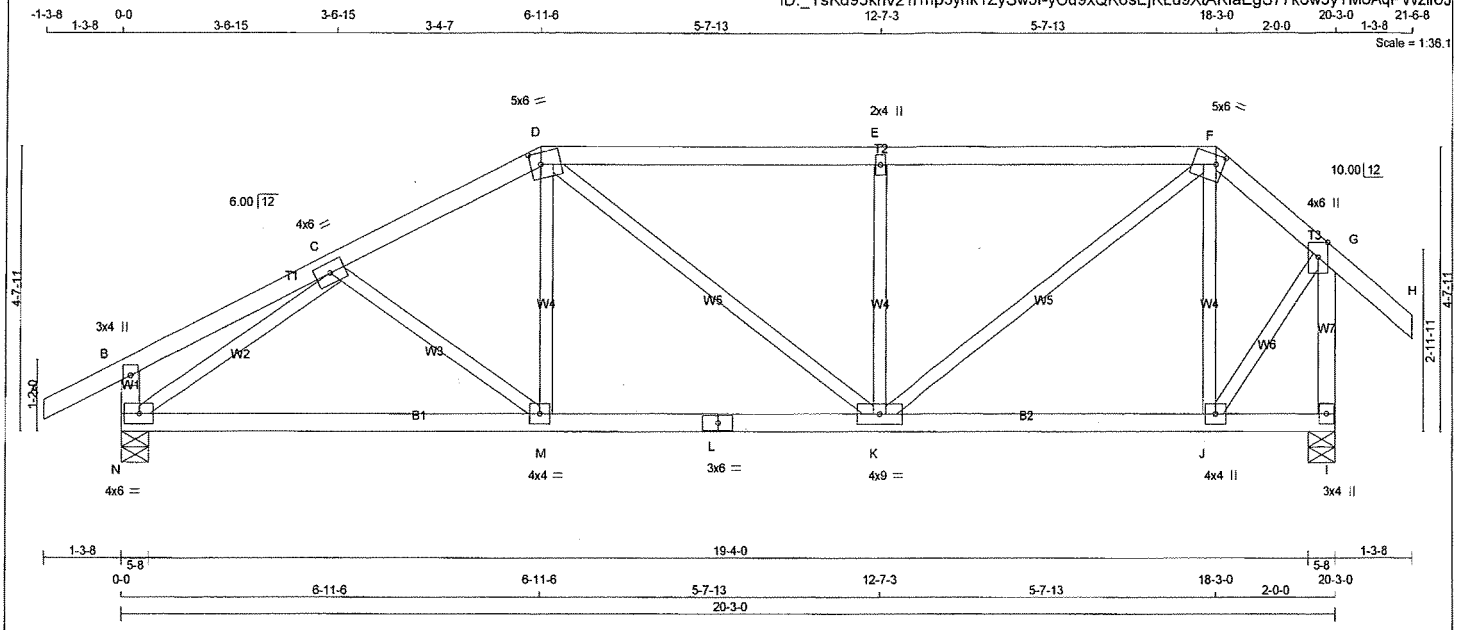


TOTAL WEIGHT = 85 lb

[M]

**LUMBER**

N. L. G. A. RULES

| CHORDS | SIZE | | LUMBER | DESCR. |
|---|---|---|---|---|
| A - D | 2x4 | DRY | No.2 | SPF |
| D - F | 2x4 | DRY | No.2 | SPF |
| F - H | 2x4 | DRY | No.2 | SPF |
| N - B | 2x4 | DRY | No.2 | SPF |
| I - G | 2x4 | DRY | No.2 | SPF |
| N - L | 2x4 | DRY | No.2 | SPF |
| L - I | 2x4 | DRY | No.2 | SPF |
| ALL WEBS EXCEPT | 2x3 | DRY | No.2 | SPF |

DRY: SEASONED LUMBER.

**PLATES (table is in inches)**

| JT | TYPE | PLATES | W | LEN | Y | X |
|---|---|---|---|---|---|---|
| B | TMV+p | MT20 | 3.0 | 4.0 | | |
| C | TMWW-t | MT20 | 4.0 | 6.0 | | |
| D | TTWW-m | MT20 | 5.0 | 6.0 | 2.25 | 2.00 |
| E | TMW+w | MT20 | 2.0 | 4.0 | | |
| F | TTWW-m | MT20 | 5.0 | 6.0 | 1.75 | 1.50 |
| G | TMVW+p | MT20 | 4.0 | 6.0 | Edge | |
| I | BMV1+p | MT20 | 3.0 | 4.0 | | |
| J | BMWW+t | MT20 | 4.0 | 4.0 | | |
| K | BMWWW-t | MT20 | 4.0 | 9.0 | | |
| L | BS-t | MT20 | 3.0 | 6.0 | | |
| M | BMWW-t | MT20 | 4.0 | 4.0 | | |
| N | BMVW1-t | MT20 | 4.0 | 6.0 | | |

Edge - INDICATES REFERENCE CORNER OF PLATE TOUCHES EDGE OF CHORD.

**DIMENSIONS, SUPPORTS AND LOADINGS SPECIFIED BY FABRICATOR TO BE VERIFIED BY BUILDING DESIGNER**

**BEARINGS**

| JT | FACTORED GROSS REACTION VERT | HORZ | MAXIMUM FACTORED GROSS REACTION DOWN | HORZ | UPLIFT | INPUT BRG IN-SX | REQRD BRG IN-SX |
|---|---|---|---|---|---|---|---|
| N | 1292 | 0 | 1292 | 0 | 0 | 5-8 | 5-8 |
| I | 1294 | 0 | 1294 | 0 | 0 | 5-8 | 5-8 |

**UNFACTORED REACTIONS**

| JT | 1ST LCASE COMBINED | MAX./MIN. COMPONENT REACTIONS SNOW | LIVE | PERM.LIVE | WIND | DEAD | SOIL |
|---|---|---|---|---|---|---|---|
| N | 980 | 480 / 0 | 213 / 0 | 0 / 0 | 0 / 0 | 288 / 0 | 0 / 0 |
| I | 982 | 481 / 0 | 213 / 0 | 0 / 0 | 0 / 0 | 288 / 0 | 0 / 0 |

BEARING MATERIAL TO BE SPF NO.2 OR BETTER AT JOINT(S) N, I

**BRACING**

TOP CHORD TO BE SHEATHED OR MAX. PURLIN SPACING = 4.93 FT.
MAX. UNBRACED BOTTOM CHORD LENGTH = 10.00 FT OR RIGID CEILING DIRECTLY APPLIED.

ALL PITCH BREAKS AND PERIMETER CORNER JOINTS MUST BE LATERALLY RESTRAINED.

**LOADING**

TOTAL LOAD CASES: (4)

CHORDS

| MEMB. FR-TO | MAX. FACTORED FORCE (LBS) | FACTORED VERT. LOAD (PLF) FROM | TO | LC1 MAX CSI (LC) | MAX. UNBRAC LENGTH |
|---|---|---|---|---|---|
| A- B | 0 / 24 | -77.7 | -77.7 | 0.10 (1) | 10.00 |
| B- C | 0 / 12 | -77.7 | -77.7 | 0.13 (1) | 10.00 |
| C- D | -1449 / 0 | -77.7 | -77.7 | 0.15 (1) | 5.27 |
| D- E | -1383 / 0 | -77.7 | -77.7 | 0.47 (1) | 4.93 |
| E- F | -1383 / 0 | -77.7 | -77.7 | 0.47 (1) | 4.93 |
| F- G | -693 / 0 | -77.7 | -77.7 | 0.06 (1) | 6.25 |
| G- H | 0 / 34 | -77.7 | -77.7 | 0.11 (1) | 10.00 |
| N- B | -215 / 0 | 0.0 | 0.0 | 0.02 (1) | 7.81 |
| I- G | -1296 / 0 | 0.0 | 0.0 | 0.21 (1) | 7.10 |
| N- M | 0 / 1291 | -39.5 | -39.5 | 0.49 (2) | 10.00 |
| M- L | 0 / 1292 | -39.5 | -39.5 | 0.50 (2) | 10.00 |
| L- K | 0 / 1292 | -39.5 | -39.5 | 0.50 (2) | 10.00 |
| K- J | 0 / 518 | -39.5 | -39.5 | 0.23 (2) | 10.00 |
| J- I | 0 / 0 | -39.5 | -39.5 | 0.16 (3) | 10.00 |

WEBS

| MEMB. FR-TO | MAX. FACTORED FORCE (LBS) | MAX CSI (LC) |
|---|---|---|
| C- M | -8 / 103 | 0.02 (3) |
| D- M | 0 / 343 | 0.08 (2) |
| D- K | 0 / 115 | 0.03 (1) |
| K- E | -536 / 0 | 0.17 (1) |
| K- F | 0 / 1090 | 0.25 (1) |
| J- F | -466 / 0 | 0.15 (1) |
| N- C | -1611 / 0 | 0.50 (1) |
| J- G | 0 / 849 | 0.19 (1) |

LICENSED PROFESSIONAL ENGINEER
02/22/19
M. J. G. ALVES
100000002
PROVINCE OF ONTARIO

**DESIGN CRITERIA**

SPECIFIED LOADS:

| | | | | |
|---|---|---|---|---|
| TOP CH. | LL | = | 20.9 | PSF |
| | DL | = | 6.0 | PSF |
| BOT CH. | LL | = | 10.5 | PSF |
| | DL | = | 7.4 | PSF |
| TOTAL LOAD | | = | 44.8 | PSF |

**SPACING = 24.0 IN. C/C**

LOADING IN FLAT SECTION BASED ON A SLOPE OF 2.00/12 MINIMUM

THIS TRUSS IS DESIGNED FOR RESIDENTIAL OR SMALL BUILDING REQUIREMENTS OF PART 9, NBCC 2010, NBCC 2015

THIS DESIGN COMPLIES WITH:
- PART 9 OF BCBC 2018 , OBC 2012
- CSA 086-09, CSA 086-14
- TPIC 2011, TPIC 2014

(60 % OF 20.9 P.S.F. G.S.L. PLUS 8.4 P.S.F. RAIN LOAD) EQUALS 20.9 P.S.F. SPECIFIED ROOF LIVE LOAD

ALLOWABLE DEFL.(LL)= L/360 (0.68")
CALCULATED VERT. DEFL.(LL) = L/ 999 (0.11")
ALLOWABLE DEFL.(TL)= L/360 (0.68")
CALCULATED VERT. DEFL.(TL) = L/ 999 (0.18")

CSI: TC=0.47/1.00 (D-E:1) , BC=0.50/1.00 (K-M:2) , WB=0.50/1.00 (C-N:1) , SSI=0.21/1.00 (D-E:1)

DOL LUMBER=1.00 NAIL=1.00 LS BEND=1.10 COMP=1.10 SHEAR=1.10 TENS= 1.10

COMPANION LIVE LOAD FACTOR = 1.00

TRUSS PLATE MANUFACTURER IS NOT RESPONSIBLE FOR QUALITY CONTROL IN THE TRUSS MANUFACTURING PLANT .

NAIL VALUES

| PLATE | GRIP(DRY) (PSI) MAX | MIN | SHEAR (PLI) MAX | MIN | SECTION (PLI) MAX | MIN |
|---|---|---|---|---|---|---|
| MT20 | 618 | 354 | 1667 | 788 | 1987 | 1656 |

PLATE PLACEMENT TOL. = 0.250 inches

PLATE ROTATION TOL. = 5.0 Deg.

JSI GRIP= 0.86 (J) (INPUT = 0.90 )
JSI METAL= 0.44 (L) (INPUT = 1.00 )

DWG NO. TAM T190408 4
STRUCTURAL
COMPONENT ONLY

| JOB NAME | TRUSS NAME | QUANTITY | PLY | JOB DESC. CONDO BLOCK 1UNITS 1- 3 | DRWG NO. |
|---|---|---|---|---|---|
| 401458 | T11 | 1 | 1 | TRUSS DESC. | |

Tamarack Roof Truss, Burlington

Version 8.230 S Nov 17 2018 MiTek Industries, Inc. Fri Feb 22 08:12:01 2019 Page 1

ID:_YsKd95knv21l1np5yhk1ZySw5f-6bKSF7xDc4n3fNxV49UL_m9lBgjUD0G8v42CG2zifVS

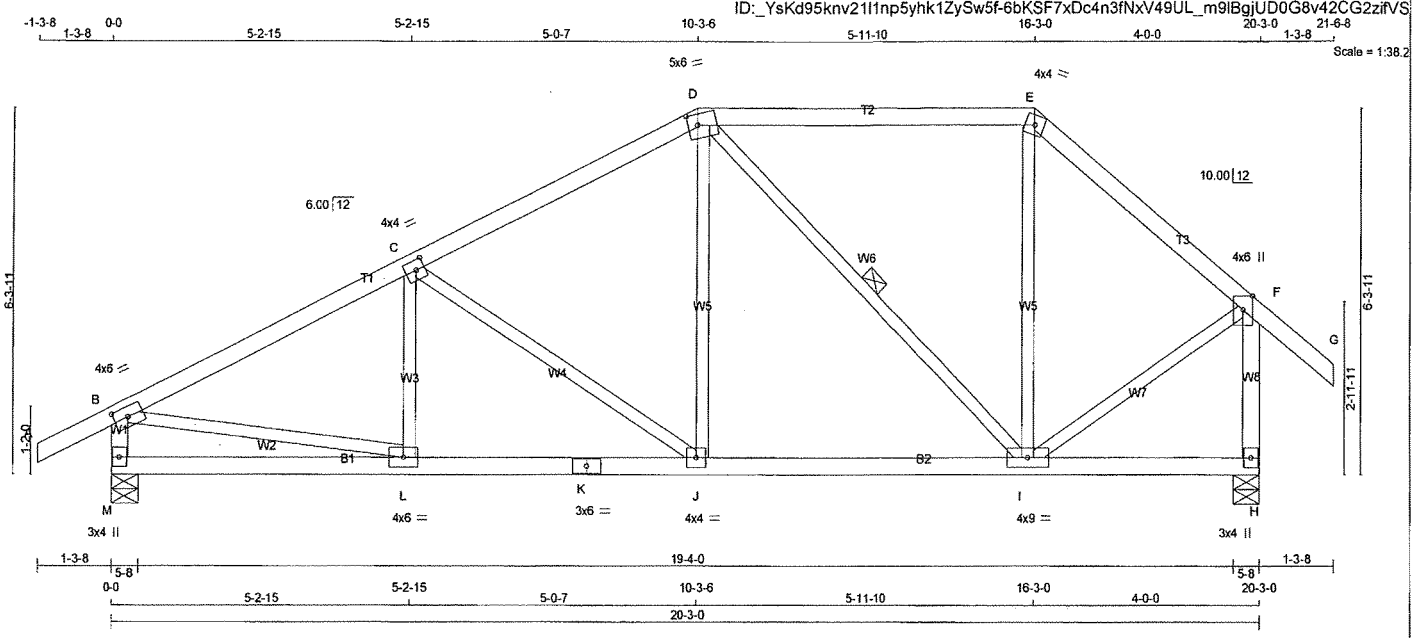


TOTAL WEIGHT = 88 lb

**LUMBER**

N. L. G. A. RULES

| CHORDS | SIZE | | LUMBER | DESCR. |
|---|---|---|---|---|
| A - D | 2x4 | DRY | No.2 | SPF |
| D - E | 2x4 | DRY | No.2 | SPF |
| E - G | 2x4 | DRY | No.2 | SPF |
| M - B | 2x4 | DRY | No.2 | SPF |
| H - F | 2x4 | DRY | No.2 | SPF |
| M - K | 2x4 | DRY | No.2 | SPF |
| K - H | 2x4 | DRY | No.2 | SPF |
| ALL WEBS EXCEPT | 2x3 | DRY | No.2 | SPF |

DRY: SEASONED LUMBER.

**PLATES (table is in inches)**

| JT | TYPE | PLATES | W | LEN | Y | X |
|---|---|---|---|---|---|---|
| B | TMVW-t | MT20 | 4.0 | 6.0 | 2.00 | 3.00 |
| C | TMWW-t | MT20 | 4.0 | 4.0 | 2.00 | 1.75 |
| D | TTWW-m | MT20 | 5.0 | 6.0 | 2.25 | 2.00 |
| E | TTW-m | MT20 | 4.0 | 4.0 | | |
| F | TMVW+p | MT20 | 4.0 | 6.0 | Edge | |
| H | BMV1+p | MT20 | 3.0 | 4.0 | | |
| I | BMWWW-t | MT20 | 4.0 | 9.0 | | |
| J | BMWW-t | MT20 | 4.0 | 4.0 | | |
| K | BS-t | MT20 | 3.0 | 6.0 | | |
| L | BMWW-t | MT20 | 4.0 | 6.0 | | |
| M | BMV1+p | MT20 | 3.0 | 4.0 | | |

Edge - INDICATES REFERENCE CORNER OF PLATE TOUCHES EDGE OF CHORD.

**DIMENSIONS, SUPPORTS AND LOADINGS SPECIFIED BY FABRICATOR TO BE VERIFIED BY BUILDING DESIGNER**

**BEARINGS**

| JT | FACTORED GROSS REACTION VERT | HORZ | MAXIMUM FACTORED GROSS REACTION DOWN | HORZ | UPLIFT | INPUT BRG IN-SX | REQRD BRG IN-SX |
|---|---|---|---|---|---|---|---|
| M | 1292 | 0 | 1292 | 0 | 0 | 5-8 | 5-8 |
| H | 1294 | 0 | 1294 | 0 | 0 | 5-8 | 5-8 |

**UNFACTORED REACTIONS**

| JT | 1ST LCASE COMBINED | MAX./MIN. COMPONENT REACTIONS SNOW | LIVE | PERM.LIVE | WIND | DEAD | SOIL |
|---|---|---|---|---|---|---|---|
| M | 980 | 480 / 0 | 213 / 0 | 0 / 0 | 0 / 0 | 288 / 0 | 0 / 0 |
| H | 982 | 481 / 0 | 213 / 0 | 0 / 0 | 0 / 0 | 288 / 0 | 0 / 0 |

BEARING MATERIAL TO BE SPF NO.2 OR BETTER AT JOINT(S) M, H

**BRACING**

TOP CHORD TO BE SHEATHED OR MAX. PURLIN SPACING = 4.97 FT.
MAX. UNBRACED BOTTOM CHORD LENGTH = 10.00 FT OR RIGID CEILING DIRECTLY APPLIED.

ALL PITCH BREAKS AND PERIMETER CORNER JOINTS MUST BE LATERALLY RESTRAINED.

1 LATERAL BRACE(S) AT 1/ 2 LENGTH OF D-I.

END VERTICAL(S) MUST BE SHEATHED OR HAVE BRACES AS INDICATED IN THE MAX. UNBRACED LENGTH COLUMN OF THE TABLE BELOW

**LOADING**

TOTAL LOAD CASES: (4)

CHORDS

| MEMB. FR-TO | MAX. FACTORED FORCE (LBS) | FACTORED VERT. LOAD LC1 (PLF) FROM | TO | MAX CSI (LC) | MAX. UNBRAC LENGTH |
|---|---|---|---|---|---|
| A- B | 0 / 24 | -77.7 | -77.7 | 0.10 (1) | 10.00 |
| B- C | -1567 / 0 | -77.7 | -77.7 | 0.29 (1) | 4.97 |
| C- D | -1150 / 0 | -77.7 | -77.7 | 0.27 (1) | 5.62 |
| D- E | -661 / 0 | -77.7 | -77.7 | 0.36 (1) | 6.25 |
| E- F | -859 / 0 | -77.7 | -77.7 | 0.17 (1) | 6.25 |
| F- G | 0 / 34 | -77.7 | -77.7 | 0.11 (1) | 10.00 |
| M- B | -1206 / 0 | 0.0 | 0.0 | 0.12 (1) | 7.29 |
| H- F | -1238 / 0 | 0.0 | 0.0 | 0.20 (1) | 7.22 |
| M- L | 0 / 0 | -39.5 | -39.5 | 0.19 (3) | 10.00 |
| L- K | 0 / 1419 | -39.5 | -39.5 | 0.37 (2) | 10.00 |
| K- J | 0 / 1419 | -39.5 | -39.5 | 0.37 (2) | 10.00 |
| J- I | 0 / 1017 | -39.5 | -39.5 | 0.32 (2) | 10.00 |
| I- H | 0 / 0 | -39.5 | -39.5 | 0.19 (3) | 10.00 |

WEBS

| MEMB. FR-TO | MAX. FACTORED FORCE (LBS) | MAX CSI (LC) |
|---|---|---|
| L- C | -10 / 158 | 0.04 (3) |
| C- J | -496 / 0 | 0.34 (1) |
| J- D | 0 / 519 | 0.12 (2) |
| D- I | -511 / 0 | 0.24 (1) |
| I- E | 0 / 240 | 0.06 (3) |
| B- L | 0 / 1438 | 0.32 (1) |
| I- F | 0 / 782 | 0.18 (1) |

LICENSED PROFESSIONAL ENGINEER
H. J. GALVES
100008024
PROVINCE OF ONTARIO

[M][F]

**DESIGN CRITERIA**

SPECIFIED LOADS:

| | | | | |
|---|---|---|---|---|
| TOP CH. | LL | = | 20.9 | PSF |
| | DL | = | 6.0 | PSF |
| BOT CH. | LL | = | 10.5 | PSF |
| | DL | = | 7.4 | PSF |
| TOTAL LOAD | | = | 44.8 | PSF |

**SPACING = 24.0 IN. C/C**

LOADING IN FLAT SECTION BASED ON A SLOPE OF 2.00/12 MINIMUM

THIS TRUSS IS DESIGNED FOR RESIDENTIAL OR SMALL BUILDING REQUIREMENTS OF PART 9, NBCC 2010, NBCC 2015

THIS DESIGN COMPLIES WITH:
- PART 9 OF BCBC 2018 , OBC 2012
- CSA 086-09, CSA 086-14
- TPIC 2011, TPIC 2014

(60 % OF 20.9 P.S.F. G.S.L. PLUS 8.4 P.S.F. RAIN LOAD) EQUALS 20.9 P.S.F. SPECIFIED ROOF LIVE LOAD

ALLOWABLE DEFL.(LL)= L/360 (0.68")
CALCULATED VERT. DEFL.(LL) = L/ 999 (0.04")
ALLOWABLE DEFL.(TL)= L/360 (0.68")
CALCULATED VERT. DEFL.(TL) = L/ 999 (0.08")

CSI: TC=0.36/1.00 (D-E:1) , BC=0.37/1.00 (J-L:2) , WB=0.34/1.00 (C-J:1) , SSI=0.18/1.00 (D-E:1)

DOL LUMBER=1.00 NAIL=1.00 LS BEND=1.10 COMP=1.10 SHEAR=1.10 TENS= 1.10

COMPANION LIVE LOAD FACTOR = 1.00

TRUSS PLATE MANUFACTURER IS NOT RESPONSIBLE FOR QUALITY CONTROL IN THE TRUSS MANUFACTURING PLANT .

NAIL VALUES

| PLATE | GRIP(DRY) (PSI) MAX | MIN | SHEAR (PLI) MAX | MIN | SECTION (PLI) MAX | MIN |
|---|---|---|---|---|---|---|
| MT20 | 618 | 354 | 1667 | 788 | 1987 | 1656 |

PLATE PLACEMENT TOL. = 0.250 inches

PLATE ROTATION TOL. = 5.0 Deg.

CSI GRIP= 0.90 (L) (INPUT = 0.90 )
CSI METAL= 0.49 (K) (INPUT = 1.00 )

DWG NO. TAM T19040085
STRUCTURAL
COMPONENT ONLY

| JOB NAME | TRUSS NAME | QUANTITY | PLY | JOB DESC. CONDO BLOCK 1UNITS 1- 3 | DRWG NO. |
|---|---|---|---|---|---|
| 401458 | T12 | 5 | 1 | TRUSS DESC. | |

Tamarack Roof Truss, Burlington

Version 8.230 S Nov 17 2018 MiTek Industries, Inc. Fri Feb 22 08:13:42 2019 Page 1

ID:_YsKd95knv21I1np5yhk1ZySw5f-f1weSg9aq7VkGv9vVto0a3rzQO8kOhh?8H02lizifTt

Scale = 1:47.0

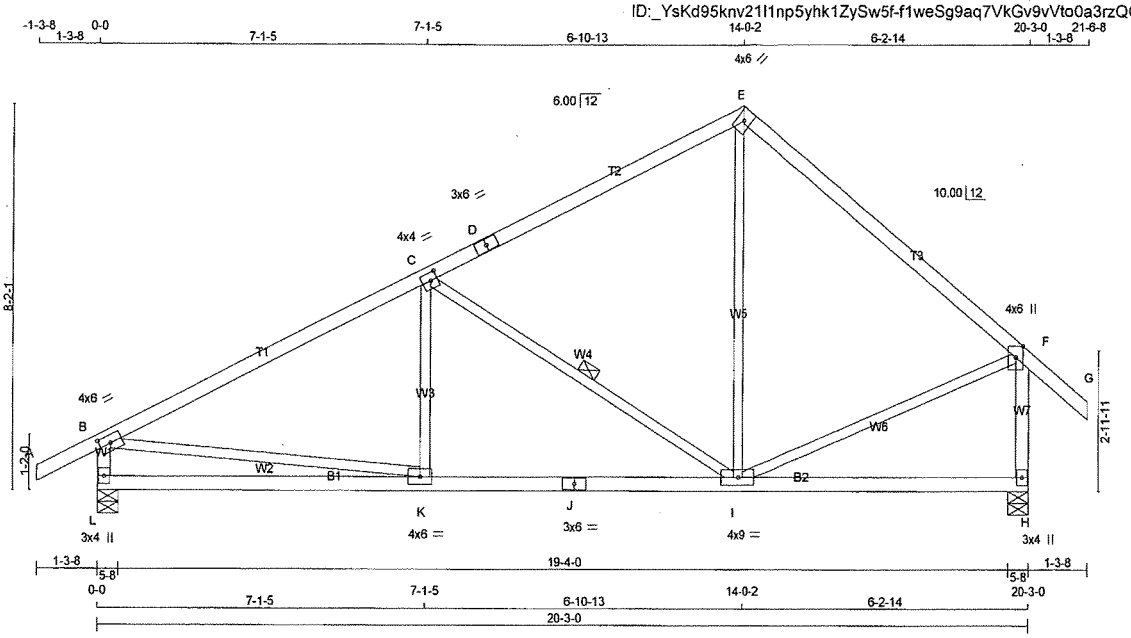


TOTAL WEIGHT = 5 X 85 = 423 lb

[M][F]

**LUMBER**

N. L. G. A. RULES

| CHORDS | SIZE | | LUMBER | DESCR. |
|---|---|---|---|---|
| A - D | 2x4 | DRY | No.2 | SPF |
| D - E | 2x4 | DRY | No.2 | SPF |
| E - G | 2x4 | DRY | No.2 | SPF |
| L - B | 2x4 | DRY | No.2 | SPF |
| H - F | 2x4 | DRY | No.2 | SPF |
| L - J | 2x4 | DRY | No.2 | SPF |
| J - H | 2x4 | DRY | No.2 | SPF |
| ALL WEBS EXCEPT | 2x3 | DRY | No.2 | SPF |

DRY: SEASONED LUMBER.

**PLATES (table is in inches)**

| JT | TYPE | PLATES | W | LEN | Y | X |
|---|---|---|---|---|---|---|
| B | TMVW-t | MT20 | 4.0 | 6.0 | 2.00 | 3.00 |
| C | TMWW-t | MT20 | 4.0 | 4.0 | 2.00 | 1.75 |
| D | TS-t | MT20 | 3.0 | 6.0 | | |
| E | TTW+h | MT20 | 4.0 | 6.0 | | |
| F | TMVW+p | MT20 | 4.0 | 6.0 | Edge | |
| H | BMV1+p | MT20 | 3.0 | 4.0 | | |
| I | BMWWW-t | MT20 | 4.0 | 9.0 | | |
| J | BS-t | MT20 | 3.0 | 6.0 | | |
| K | BMWW-t | MT20 | 4.0 | 6.0 | | |
| L | BMV1+p | MT20 | 3.0 | 4.0 | | |

Edge - INDICATES REFERENCE CORNER OF PLATE TOUCHES EDGE OF CHORD.

**DIMENSIONS, SUPPORTS AND LOADINGS SPECIFIED BY FABRICATOR TO BE VERIFIED BY BUILDING DESIGNER**

**BEARINGS**

| JT | FACTORED GROSS REACTION VERT | HORZ | MAXIMUM FACTORED GROSS REACTION DOWN | HORZ | UPLIFT | INPUT BRG IN-SX | REQRD BRG IN-SX |
|---|---|---|---|---|---|---|---|
| L | 1292 | 0 | 1292 | 0 | 0 | 5-8 | 5-8 |
| H | 1294 | 0 | 1294 | 0 | 0 | 5-8 | 5-8 |

**UNFACTORED REACTIONS**

| JT | 1ST LCASE COMBINED | MAX./MIN. COMPONENT REACTIONS SNOW | LIVE | PERM.LIVE | WIND | DEAD | SOIL |
|---|---|---|---|---|---|---|---|
| L | 980 | 480 / 0 | 213 / 0 | 0 / 0 | 0 / 0 | 288 / 0 | 0 / 0 |
| H | 982 | 481 / 0 | 213 / 0 | 0 / 0 | 0 / 0 | 288 / 0 | 0 / 0 |

BEARING MATERIAL TO BE SPF NO.2 OR BETTER AT JOINT(S) L, H

**BRACING**

TOP CHORD TO BE SHEATHED OR MAX. PURLIN SPACING = 4.64 FT.
MAX. UNBRACED BOTTOM CHORD LENGTH = 10.00 FT OR RIGID CEILING DIRECTLY APPLIED.

ALL PITCH BREAKS AND PERIMETER CORNER JOINTS MUST BE LATERALLY RESTRAINED.

1 LATERAL BRACE(S) AT 1/ 2 LENGTH OF C-I.

END VERTICAL(S) MUST BE SHEATHED OR HAVE BRACES AS INDICATED IN THE MAX. UNBRACED LENGTH COLUMN OF THE TABLE BELOW

**LOADING**

TOTAL LOAD CASES: (4)

CHORDS

| MEMB. FR-TO | MAX. FACTORED FORCE (LBS) | FACTORED VERT. LOAD LC1 (PLF) FROM | TO | MAX CSI (LC) | MAX. UNBRAC LENGTH |
|---|---|---|---|---|---|
| A- B | 0 / 24 | -77.7 | -77.7 | 0.10 (1) | 10.00 |
| B- C | -1521 / 0 | -77.7 | -77.7 | 0.57 (1) | 4.64 |
| C- D | -791 / 0 | -77.7 | -77.7 | 0.51 (1) | 6.03 |
| D- E | -791 / 0 | -77.7 | -77.7 | 0.51 (1) | 6.03 |
| E- F | -879 / 0 | -77.7 | -77.7 | 0.41 (1) | 5.99 |
| F- G | 0 / 34 | -77.7 | -77.7 | 0.11 (1) | 10.00 |
| L- B | -1177 / 0 | 0.0 | 0.0 | 0.12 (1) | 7.35 |
| H- F | -1195 / 0 | 0.0 | 0.0 | 0.19 (1) | 7.31 |
| L- K | 0 / 0 | -39.5 | -39.5 | 0.35 (3) | 10.00 |
| K- J | 0 / 1386 | -39.5 | -39.5 | 0.52 (2) | 10.00 |
| J- I | 0 / 1386 | -39.5 | -39.5 | 0.52 (2) | 10.00 |
| I- H | 0 / 0 | -39.5 | -39.5 | 0.30 (3) | 10.00 |

WEBS

| MEMB. FR-TO | MAX. FACTORED FORCE (LBS) | MAX CSI (LC) |
|---|---|---|
| K- C | 0 / 295 | 0.07 (3) |
| I- E | -841 / 0 | 0.37 (1) |
| B- K | 0 / 508 | 0.11 (2) |
| I- F | 0 / 1396 | 0.31 (1) |
| | 0 / 731 | 0.16 (1) |

LICENSED PROFESSIONAL ENGINEER
02/22/19
H. J. G. ALVES
100009989
PROVINCE OF ONTARIO

**DESIGN CRITERIA**

SPECIFIED LOADS:

| | | | | |
|---|---|---|---|---|
| TOP CH. | LL | = | 20.9 | PSF |
| | DL | = | 6.0 | PSF |
| BOT CH. | LL | = | 10.5 | PSF |
| | DL | = | 7.4 | PSF |
| TOTAL LOAD | | = | 44.8 | PSF |

**SPACING = 24.0 IN. C/C**

THIS TRUSS IS DESIGNED FOR RESIDENTIAL OR SMALL BUILDING REQUIREMENTS OF PART 9, NBCC 2010, NBCC 2015

THIS DESIGN COMPLIES WITH:
- PART 9 OF BCBC 2018 , OBC 2012
- CSA 086-09, CSA 086-14
- TPIC 2011, TPIC 2014

(60 % OF 20.9 P.S.F. G.S.L. PLUS 8.4 P.S.F. RAIN LOAD) EQUALS 20.9 P.S.F. SPECIFIED ROOF LIVE LOAD

ALLOWABLE DEFL.(LL)= L/360 (0.68")
CALCULATED VERT. DEFL.(LL) = L/ 999 (0.11")
ALLOWABLE DEFL.(TL)= L/360 (0.68")
CALCULATED VERT. DEFL.(TL) = L/ 999 (0.19")

CSI: TC=0.57/1.00 (B-C:1) , BC=0.52/1.00 (I-K:2) , WB=0.37/1.00 (C-I:1) , SSI=0.24/1.00 (B-C:1)

DOL LUMBER=1.00 NAIL=1.00 LS BEND=1.10 COMP=1.10 SHEAR=1.10 TENS= 1.10

COMPANION LIVE LOAD FACTOR = 1.00

TRUSS PLATE MANUFACTURER IS NOT RESPONSIBLE FOR QUALITY CONTROL IN THE TRUSS MANUFACTURING PLANT .

NAIL VALUES

| PLATE | GRIP(DRY) (PSI) MAX | MIN | SHEAR (PLI) MAX | MIN | SECTION (PLI) MAX | MIN |
|---|---|---|---|---|---|---|
| MT20 | 618 | 354 | 1667 | 788 | 1987 | 1656 |

PLATE PLACEMENT TOL. = 0.250 inches

PLATE ROTATION TOL. = 5.0 Deg.

JSI GRIP= 0.83 (K) (INPUT = 0.90 )
JSI METAL= 0.54 (J) (INPUT = 1.00 )

DWG NO. TAM 71404086
STRUCTURAL
COMPONENT ONLY

| JOB NAME | TRUSS NAME | QUANTITY | PLY | JOB DESC. | DRWG NO. |
|---|---|---|---|---|---|
| 401458 | T12C | 1 | 1 | CONDO BLOCK 1UNITS 1- 3<br>TRUSS DESC. | |

Tamarack Roof Truss, Burlington

Version 8.230 S Nov 17 2018 MiTek Industries, Inc. Fri Feb 22 08:04:51 2019 Page 1

ID:_YsKd95knv21I1np5yhk1ZySw5f-itLv?5kVtzc43I3surmVZ5MDRLvVTXEr1AuRAzzifcA

Scale = 1:46.7

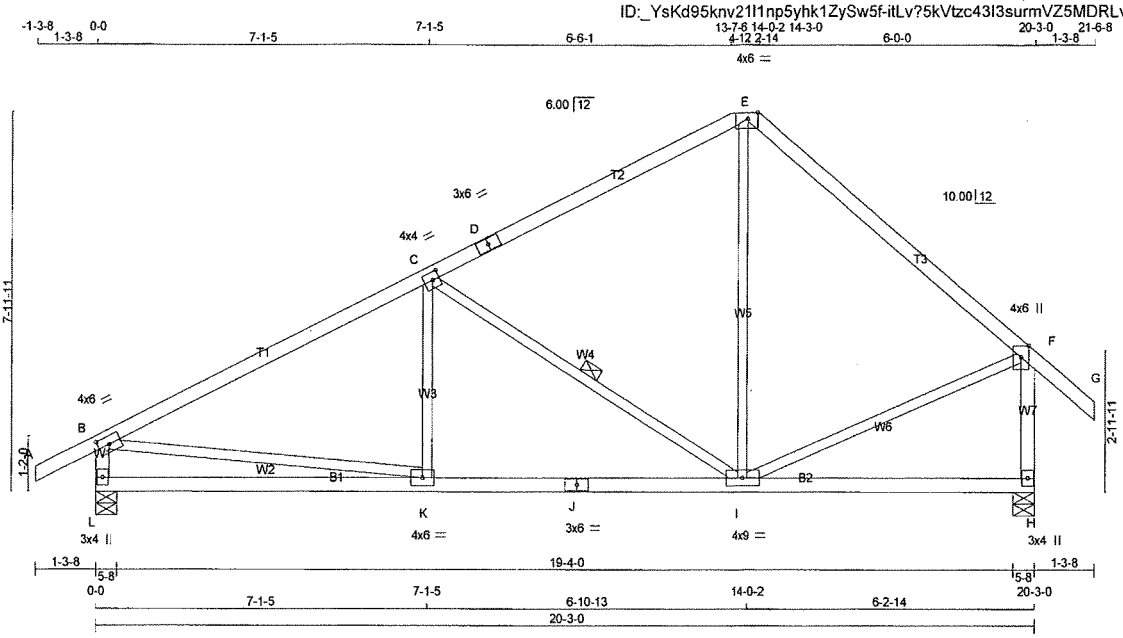


TOTAL WEIGHT = 84 lb

[M][F]

**LUMBER**

N. L. G. A. RULES

| CHORDS | SIZE | | LUMBER | DESCR. |
|---|---|---|---|---|
| A - D | 2x4 | DRY | No.2 | SPF |
| D - E | 2x4 | DRY | No.2 | SPF |
| E - G | 2x4 | DRY | No.2 | SPF |
| L - B | 2x4 | DRY | No.2 | SPF |
| H - F | 2x4 | DRY | No.2 | SPF |
| L - J | 2x4 | DRY | No.2 | SPF |
| J - H | 2x4 | DRY | No.2 | SPF |
| ALL WEBS EXCEPT | 2x3 | DRY | No.2 | SPF |

DRY: SEASONED LUMBER.

**PLATES (table is in inches)**

| JT | TYPE | PLATES | W | LEN | Y | X |
|---|---|---|---|---|---|---|
| B | TMVW-t | MT20 | 4.0 | 6.0 | 2.00 | 3.00 |
| C | TMWW-t | MT20 | 4.0 | 4.0 | 2.00 | 1.75 |
| D | TS-t | MT20 | 3.0 | 6.0 | | |
| E | TMTW-p | MT20 | 4.0 | 6.0 | Edge | 2.50 |
| F | TMVW+p | MT20 | 4.0 | 6.0 | Edge | |
| H | BMV1+p | MT20 | 3.0 | 4.0 | | |
| I | BMWWW-t | MT20 | 4.0 | 9.0 | | |
| J | BS-t | MT20 | 3.0 | 6.0 | | |
| K | BMWW-t | MT20 | 4.0 | 6.0 | | |
| L | BMV1+p | MT20 | 3.0 | 4.0 | | |

Edge - INDICATES REFERENCE CORNER OF PLATE TOUCHES EDGE OF CHORD.

**DIMENSIONS, SUPPORTS AND LOADINGS SPECIFIED BY FABRICATOR TO BE VERIFIED BY BUILDING DESIGNER**

**BEARINGS**

| JT | FACTORED GROSS REACTION VERT | HORZ | MAXIMUM FACTORED GROSS REACTION DOWN | HORZ | UPLIFT | INPUT BRG IN-SX | REQRD BRG IN-SX |
|---|---|---|---|---|---|---|---|
| L | 1292 | 0 | 1292 | 0 | 0 | 5-8 | 5-8 |
| H | 1294 | 0 | 1294 | 0 | 0 | 5-8 | 5-8 |

**UNFACTORED REACTIONS**

| JT | 1ST LCASE COMBINED | MAX./MIN. COMPONENT REACTIONS SNOW | LIVE | PERM.LIVE | WIND | DEAD | SOIL |
|---|---|---|---|---|---|---|---|
| L | 980 | 480 / 0 | 213 / 0 | 0 / 0 | 0 / 0 | 288 / 0 | 0 / 0 |
| H | 982 | 481 / 0 | 213 / 0 | 0 / 0 | 0 / 0 | 288 / 0 | 0 / 0 |

BEARING MATERIAL TO BE SPF NO.2 OR BETTER AT JOINT(S) L, H

**BRACING**

TOP CHORD TO BE SHEATHED OR MAX. PURLIN SPACING = 4.64 FT.
MAX. UNBRACED BOTTOM CHORD LENGTH = 10.00 FT OR RIGID CEILING DIRECTLY APPLIED.

ALL PITCH BREAKS AND PERIMETER CORNER JOINTS MUST BE LATERALLY RESTRAINED.

1 LATERAL BRACE(S) AT 1/ 2 LENGTH OF C-I.

END VERTICAL(S) MUST BE SHEATHED OR HAVE BRACES AS INDICATED IN THE MAX. UNBRACED LENGTH COLUMN OF THE TABLE BELOW

**LOADING**

TOTAL LOAD CASES: (4)

CHORDS

| MEMB. FR-TO | MAX. FACTORED FORCE (LBS) | FACTORED VERT. LOAD (PLF) FROM | TO | LC1 MAX CSI (LC) | MAX. UNBRAC LENGTH |
|---|---|---|---|---|---|
| A- B | 0 / 24 | -77.7 | -77.7 | 0.10 (1) | 10.00 |
| B- C | -1521 / 0 | -77.7 | -77.7 | 0.57 (1) | 4.64 |
| C- D | -791 / 0 | -77.7 | -77.7 | 0.51 (1) | 6.03 |
| D- E | -791 / 0 | -77.7 | -77.7 | 0.51 (1) | 6.03 |
| E- F | -879 / 0 | -77.7 | -77.7 | 0.41 (1) | 5.99 |
| F- G | 0 / 34 | -77.7 | -77.7 | 0.11 (1) | 10.00 |
| L- B | -1177 / 0 | 0.0 | 0.0 | 0.12 (1) | 7.35 |
| H- F | -1195 / 0 | 0.0 | 0.0 | 0.19 (1) | 7.31 |
| L- K | 0 / 0 | -39.5 | -39.5 | 0.35 (3) | 10.00 |
| K- J | 0 / 1386 | -39.5 | -39.5 | 0.52 (2) | 10.00 |
| J- I | 0 / 1386 | -39.5 | -39.5 | 0.52 (2) | 10.00 |
| I- H | 0 / 0 | -39.5 | -39.5 | 0.30 (3) | 10.00 |

WEBS

| MEMB. FR-TO | MAX. FACTORED FORCE (LBS) | MAX CSI (LC) |
|---|---|---|
| K- C | 0 / 295 | 0.07 (3) |
| C- I | -841 / 0 | 0.37 (1) |
| I- E | 0 / 508 | 0.11 (2) |
| B- K | 0 / 1396 | 0.31 (1) |
| I- F | 0 / 731 | 0.16 (1) |

**DESIGN CRITERIA**

SPECIFIED LOADS:

| | | | | |
|---|---|---|---|---|
| TOP CH. | LL | = | 20.9 | PSF |
| | DL | = | 6.0 | PSF |
| BOT CH. | LL | = | 10.5 | PSF |
| | DL | = | 7.4 | PSF |
| TOTAL LOAD | | = | 44.8 | PSF |

**SPACING = 24.0 IN. C/C**

THIS TRUSS IS DESIGNED FOR RESIDENTIAL OR SMALL BUILDING REQUIREMENTS OF PART 9, NBCC 2010, NBCC 2015

THIS DESIGN COMPLIES WITH:
- PART 9 OF BCBC 2018 , OBC 2012
- CSA 086-09, CSA 086-14
- TPIC 2011, TPIC 2014

(60 % OF 20.9 P.S.F. G.S.L. PLUS 8.4 P.S.F. RAIN LOAD) EQUALS 20.9 P.S.F. SPECIFIED ROOF LIVE LOAD

ALLOWABLE DEFL.(LL)= L/360 (0.68")
CALCULATED VERT. DEFL.(LL) = L/ 999 (0.11")
ALLOWABLE DEFL.(TL)= L/360 (0.68")
CALCULATED VERT. DEFL.(TL) = L/ 999 (0.19")

CSI: TC=0.57/1.00 (B-C:1) , BC=0.52/1.00 (I-K:2) , WB=0.37/1.00 (C-I:1) , SSI=0.24/1.00 (B-C:1)

DOL LUMBER=1.00 NAIL=1.00 LS BEND=1.10 COMP=1.10 SHEAR=1.10 TENS= 1.10

COMPANION LIVE LOAD FACTOR = 1.00

TRUSS PLATE MANUFACTURER IS NOT RESPONSIBLE FOR QUALITY CONTROL IN THE TRUSS MANUFACTURING PLANT .

NAIL VALUES

| PLATE | GRIP(DRY) (PSI) MAX | MIN | SHEAR (PLI) MAX | MIN | SECTION (PLI) MAX | MIN |
|---|---|---|---|---|---|---|
| MT20 | 618 | 354 | 1667 | 788 | 1987 | 1656 |

PLATE PLACEMENT TOL. = 0.250 inches

PLATE ROTATION TOL. = 5.0 Deg.

JSI GRIP= 0.83 (K) (INPUT = 0.90 )
JSI METAL= 0.54 (J) (INPUT = 1.00 )

LICENSED PROFESSIONAL ENGINEER
02/22/19
H. J. G. ALVES
100009024
PROVINCE OF ONTARIO

DWG NO. TAM T19040087
STRUCTURAL
COMPONENT ONLY

| JOB NAME | TRUSS NAME | QUANTITY | PLY | JOB DESC. | DRWG NO. |
|---|---|---|---|---|---|
| 401458 | G13 | 2 | 1 | CONDO BLOCK 1UNITS 1- 3<br>TRUSS DESC. | |

Tamarack Roof Truss, Burlington

Version 8.230 S Nov 17 2018 MiTek Industries, Inc. Fri Feb 22 07:51:36 2019 Page 1
ID:_YsKd95knv21I1np5yhk1ZySw5f-UxpM9G6p5iRtB7n3pO04rRwTJtiFi24qD_ptmYzifob

Scale = 1:38.4

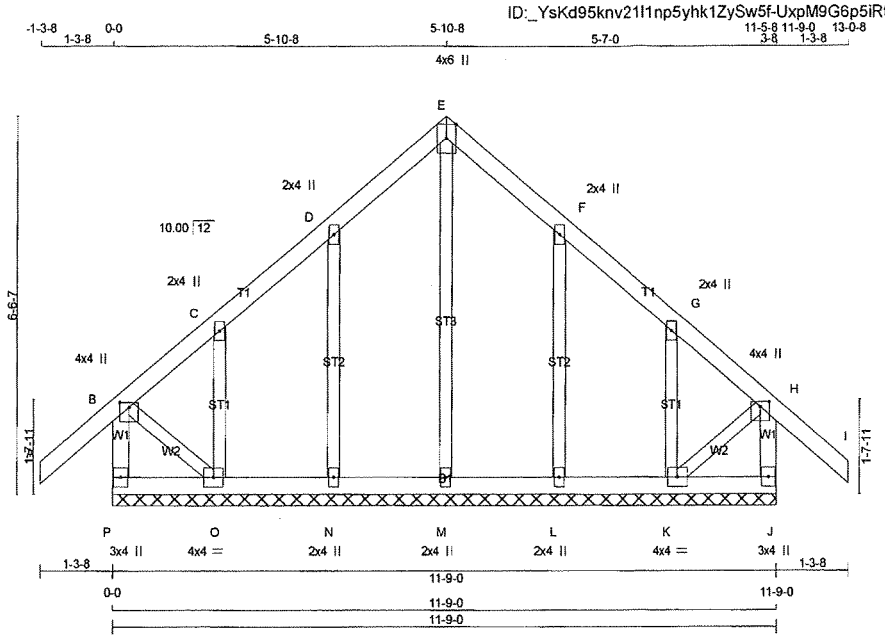


TOTAL WEIGHT = 2 X 57 = 114 lb

**LUMBER**

N. L. G. A. RULES

| CHORDS | SIZE | | LUMBER | DESCR. |
|---|---|---|---|---|
| P - B | 2x4 | DRY | No.2 | SPF |
| A - E | 2x4 | DRY | No.2 | SPF |
| E - I | 2x4 | DRY | No.2 | SPF |
| J - H | 2x4 | DRY | No.2 | SPF |
| P - J | 2x4 | DRY | No.2 | SPF |
| ALL WEBS | 2x3 | DRY | No.2 | SPF |
| ALL GABLE WEBS | 2x3 | DRY | No.2 | SPF |

DRY: SEASONED LUMBER.

GABLE STUDS SPACED AT 2-0-0 OC.

**PLATES (table is in inches)**

| JT | TYPE | PLATES | W | LEN | Y | X |
|---|---|---|---|---|---|---|
| B | TMVW+p | MT20 | 4.0 | 4.0 | 1.00 | 2.00 |
| C, D, F, G | | | | | | |
| C | TMW+w | MT20 | 2.0 | 4.0 | | |
| E | TTW+p | MT20 | 4.0 | 6.0 | Edge | |
| H | TMVW+p | MT20 | 4.0 | 4.0 | 1.00 | 2.00 |
| J | BMV1+p | MT20 | 3.0 | 4.0 | | |
| K | BMWW1-t | MT20 | 4.0 | 4.0 | | |
| L, M, N | | | | | | |
| L | BMW1+w | MT20 | 2.0 | 4.0 | | |
| O | BMWW1-t | MT20 | 4.0 | 4.0 | | |
| P | BMV1+p | MT20 | 3.0 | 4.0 | | |

Edge - INDICATES REFERENCE CORNER OF PLATE TOUCHES EDGE OF CHORD.

**DIMENSIONS, SUPPORTS AND LOADINGS SPECIFIED BY FABRICATOR TO BE VERIFIED BY BUILDING DESIGNER**

**BEARINGS**

THIS TRUSS DESIGNED FOR CONTINUOUS BEARINGS.

THIS TRUSS REQUIRES RIGID SHEATHING ON EXPOSED FACE.

BEARING MATERIAL TO BE SPF NO.2 OR BETTER AT JOINT(S)

**BRACING**

TOP CHORD TO BE SHEATHED OR MAX. PURLIN SPACING = 6.25 FT.
MAX. UNBRACED BOTTOM CHORD LENGTH = 10.00 FT OR RIGID CEILING DIRECTLY APPLIED.

ALL PITCH BREAKS AND PERIMETER CORNER JOINTS MUST BE LATERALLY RESTRAINED.

**LOADING**

TOTAL LOAD CASES: (4)

CHORDS

| MEMB. FR-TO | MAX. FACTORED FORCE (LBS) | FACTORED VERT. LOAD LC1 (PLF) FROM | TO | MAX CSI (LC) | MAX. UNBRAC LENGTH |
|---|---|---|---|---|---|
| P- B | -237 / 0 | 0.0 | 0.0 | 0.03 (1) | 7.81 |
| A- B | 0 / 34 | -77.7 | -77.7 | 0.11 (1) | 10.00 |
| B- C | -44 / 0 | -77.7 | -77.7 | 0.10 (1) | 6.25 |
| C- D | -7 / 0 | -77.7 | -77.7 | 0.05 (1) | 10.00 |
| D- E | -22 / 0 | -77.7 | -77.7 | 0.05 (1) | 6.25 |
| E- F | -22 / 0 | -77.7 | -77.7 | 0.05 (1) | 6.25 |
| F- G | -7 / 0 | -77.7 | -77.7 | 0.05 (1) | 10.00 |
| G- H | -44 / 0 | -77.7 | -77.7 | 0.10 (1) | 6.25 |
| H- I | 0 / 34 | -77.7 | -77.7 | 0.11 (1) | 10.00 |
| J- H | -237 / 0 | 0.0 | 0.0 | 0.03 (1) | 7.81 |
| P- O | 0 / 0 | -39.5 | -39.5 | 0.03 (3) | 10.00 |
| O- N | 0 / 12 | -39.5 | -39.5 | 0.03 (3) | 10.00 |
| N- M | 0 / 8 | -39.5 | -39.5 | 0.03 (3) | 10.00 |
| M- L | 0 / 8 | -39.5 | -39.5 | 0.03 (3) | 10.00 |
| L- K | 0 / 12 | -39.5 | -39.5 | 0.03 (3) | 10.00 |
| K- J | 0 / 0 | -39.5 | -39.5 | 0.03 (3) | 10.00 |

WEBS

| MEMB. FR-TO | MAX. FACTORED FORCE (LBS) | MAX CSI (LC) |
|---|---|---|
| M- E | -114 / 0 | 0.08 (1) |
| N- D | -187 / 0 | 0.07 (1) |
| O- C | -94 / 0 | 0.02 (1) |
| L- F | -187 / 0 | 0.07 (1) |
| K- G | -94 / 0 | 0.02 (1) |
| B- O | 0 / 19 | 0.00 (1) |
| K- H | 0 / 19 | 0.00 (1) |

[M]

**DESIGN CRITERIA**

SPECIFIED LOADS:

| | | | | |
|---|---|---|---|---|
| TOP CH. | LL | = | 20.9 | PSF |
| | DL | = | 6.0 | PSF |
| BOT CH. | LL | = | 10.5 | PSF |
| | DL | = | 7.4 | PSF |
| TOTAL LOAD | | = | 44.8 | PSF |

**SPACING = 24.0 IN. C/C**

THIS TRUSS IS DESIGNED FOR RESIDENTIAL OR SMALL BUILDING REQUIREMENTS OF PART 9, NBCC 2010, NBCC 2015

THIS DESIGN COMPLIES WITH:
- PART 9 OF BCBC 2018 , OBC 2012
- CSA 086-09, CSA 086-14
- TPIC 2011, TPIC 2014

DESIGN ASSUMPTIONS
-OVERHANG NOT TO BE ALTERED OR CUT OFF.

(60 % OF 20.9 P.S.F. G.S.L. PLUS 8.4 P.S.F. RAIN LOAD) EQUALS 20.9 P.S.F. SPECIFIED ROOF LIVE LOAD

CSI: TC=0.11/1.00 (A-B:1) , BC=0.03/1.00 (N-O:3) , WB=0.08/1.00 (E-M:1) , SSI=0.06/1.00 (A-B:1)

DOL LUMBER=1.00 NAIL=1.00 LS BEND=1.10 COMP=1.10 SHEAR=1.10 TENS= 1.10

COMPANION LIVE LOAD FACTOR = 1.00

TRUSS PLATE MANUFACTURER IS NOT RESPONSIBLE FOR QUALITY CONTROL IN THE TRUSS MANUFACTURING PLANT .

NAIL VALUES

| PLATE | GRIP(DRY) (PSI) MAX | MIN | SHEAR (PLI) MAX | MIN | SECTION (PLI) MAX | MIN |
|---|---|---|---|---|---|---|
| MT20 | 618 | 354 | 1667 | 788 | 1987 | 1656 |

PLATE PLACEMENT TOL. = 0.250 inches

PLATE ROTATION TOL. = 5.0 Deg.

JSI GRIP= 0.18 (B) (INPUT = 0.90 )
JSI METAL= 0.10 (F) (INPUT = 1.00 )

LICENSED PROFESSIONAL ENGINEER
02/22/19
H. J. G. ALVES
100004264
PROVINCE OF ONTARIO

DWG NO. TAM T204088
STRUCTURAL
COMPONENT ONLY

| JOB NAME | TRUSS NAME | QUANTITY | PLY | JOB DESC. CONDO BLOCK 1UNITS 1- 3 | DRWG NO. |
|---|---|---|---|---|---|
| 401458 | T14 | 2 | 1 | TRUSS DESC. | |

Tamarack Roof Truss, Burlington

Version 8.230 S Nov 17 2018 MiTek Industries, Inc. Fri Feb 22 07:51:58 2019 Page 1

ID:_YsKd95knv21l1np5yhk1ZySw5f-r98gmnNdwTDlqVTl6?PEk4rDpk3QswS3HP81YHzifoF

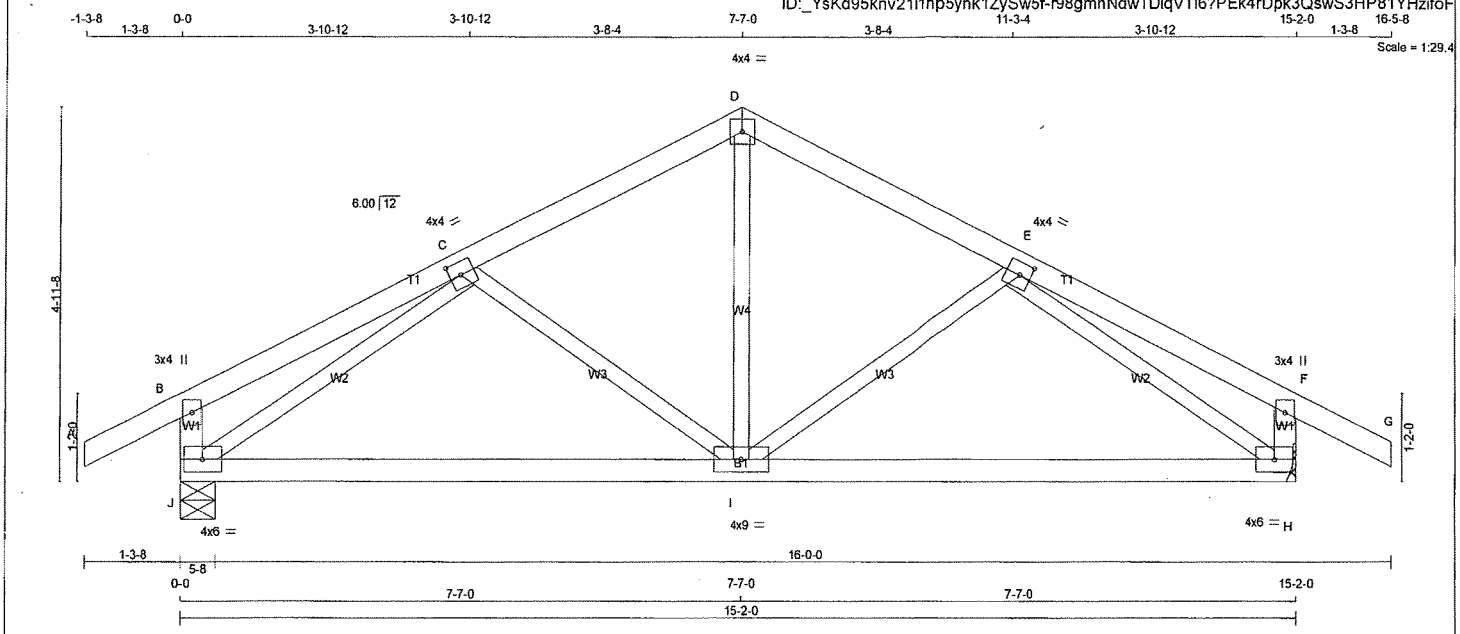


TOTAL WEIGHT = 2 X 60 = 119 lb

[M][F]

**LUMBER**

N. L. G. A. RULES

| CHORDS | SIZE | | LUMBER | DESCR. |
|---|---|---|---|---|
| A - D | 2x4 | DRY | No.2 | SPF |
| D - G | 2x4 | DRY | No.2 | SPF |
| J - B | 2x4 | DRY | No.2 | SPF |
| H - F | 2x4 | DRY | No.2 | SPF |
| J - H | 2x4 | DRY | No.2 | SPF |
| ALL WEBS EXCEPT | 2x3 | DRY | No.2 | SPF |

DRY: SEASONED LUMBER.

**PLATES (table is in inches)**

| JT | TYPE | PLATES | W | LEN | Y | X |
|---|---|---|---|---|---|---|
| B | TMV+p | MT20 | 3.0 | 4.0 | | |
| C | TMWW-t | MT20 | 4.0 | 4.0 | 2.00 | 1.75 |
| D | TTW-p | MT20 | 4.0 | 4.0 | | |
| E | TMWW-t | MT20 | 4.0 | 4.0 | 2.00 | 1.75 |
| F | TMV+p | MT20 | 3.0 | 4.0 | | |
| H | BMVW1-t | MT20 | 4.0 | 6.0 | | |
| I | BMWWW-t | MT20 | 4.0 | 9.0 | | |
| J | BMVW1-t | MT20 | 4.0 | 6.0 | | |

**DIMENSIONS, SUPPORTS AND LOADINGS SPECIFIED BY FABRICATOR TO BE VERIFIED BY BUILDING DESIGNER**

**BEARINGS**

| JT | FACTORED GROSS REACTION VERT | HORZ | MAXIMUM FACTORED GROSS REACTION DOWN | HORZ | UPLIFT | INPUT BRG IN-SX | REQRD BRG IN-SX |
|---|---|---|---|---|---|---|---|
| J | 994 | 0 | 994 | 0 | 0 | 5-8 | 5-8 |
| H | 994 | 0 | 994 | 0 | 0 | MECHANICAL | |

A SUITABLE HANGER/MECHANICAL CONNECTION IS REQUIRED AT JOINT H. MINIMUM BEARING LENGTH AT JOINT H = 1-8.

**UNFACTORED REACTIONS**

| JT | 1ST LCASE COMBINED | MAX./MIN. COMPONENT REACTIONS SNOW | LIVE | PERM.LIVE | WIND | DEAD | SOIL |
|---|---|---|---|---|---|---|---|
| J | 752 | 374 / 0 | 159 / 0 | 0 / 0 | 0 / 0 | 220 / 0 | 0 / 0 |
| H | 752 | 374 / 0 | 159 / 0 | 0 / 0 | 0 / 0 | 220 / 0 | 0 / 0 |

BEARING MATERIAL TO BE SPF NO.2 OR BETTER AT JOINT(S) J

**BRACING**

TOP CHORD TO BE SHEATHED OR MAX. PURLIN SPACING = 6.25 FT.
MAX. UNBRACED BOTTOM CHORD LENGTH = 10.00 FT OR RIGID CEILING DIRECTLY APPLIED.

ALL PITCH BREAKS AND PERIMETER CORNER JOINTS MUST BE LATERALLY RESTRAINED.

**LOADING**

TOTAL LOAD CASES: (4)

CHORDS

| MEMB. FR-TO | MAX. FACTORED FORCE (LBS) | FACTORED VERT. LOAD LC1 (PLF) FROM | TO | MAX CSI (LC) | MAX. UNBRAC LENGTH |
|---|---|---|---|---|---|
| A- B | 0 / 24 | -77.7 | -77.7 | 0.10 (1) | 10.00 |
| B- C | 0 / 14 | -77.7 | -77.7 | 0.17 (1) | 10.00 |
| C- D | -890 / 0 | -77.7 | -77.7 | 0.14 (1) | 6.25 |
| D- E | -890 / 0 | -77.7 | -77.7 | 0.14 (1) | 6.25 |
| E- F | 0 / 14 | -77.7 | -77.7 | 0.17 (1) | 10.00 |
| F- G | 0 / 24 | -77.7 | -77.7 | 0.10 (1) | 10.00 |
| J- B | -222 / 0 | 0.0 | 0.0 | 0.02 (1) | 7.81 |
| H- F | -222 / 0 | 0.0 | 0.0 | 0.02 (1) | 7.81 |
| J- I | 0 / 908 | -39.5 | -39.5 | 0.60 (2) | 10.00 |
| I- H | 0 / 908 | -39.5 | -39.5 | 0.60 (2) | 10.00 |

WEBS

| MEMB. FR-TO | MAX. FACTORED FORCE (LBS) | MAX CSI (LC) |
|---|---|---|
| I- D | 0 / 566 | 0.13 (2) |
| I- E | -154 / 35 | 0.06 (1) |
| C- I | -154 / 35 | 0.06 (1) |
| J- C | -1122 / 0 | 0.40 (1) |
| E- H | -1122 / 0 | 0.40 (1) |

**DESIGN CRITERIA**

SPECIFIED LOADS:

| | | | | |
|---|---|---|---|---|
| TOP CH. | LL | = | 20.9 | PSF |
| | DL | = | 6.0 | PSF |
| BOT CH. | LL | = | 10.5 | PSF |
| | DL | = | 7.4 | PSF |
| TOTAL LOAD | | = | 44.8 | PSF |

**SPACING = 24.0 IN. C/C**

THIS TRUSS IS DESIGNED FOR RESIDENTIAL OR SMALL BUILDING REQUIREMENTS OF PART 9, NBCC 2010, NBCC 2015

THIS DESIGN COMPLIES WITH:
- PART 9 OF BCBC 2018 , OBC 2012
- CSA 086-09, CSA 086-14
- TPIC 2011, TPIC 2014

(60 % OF 20.9 P.S.F. G.S.L. PLUS 8.4 P.S.F. RAIN LOAD) EQUALS 20.9 P.S.F. SPECIFIED ROOF LIVE LOAD

ALLOWABLE DEFL.(LL)= L/360 (0.51")
CALCULATED VERT. DEFL.(LL) = L/ 999 (0.10")
ALLOWABLE DEFL.(TL)= L/360 (0.51")
CALCULATED VERT. DEFL.(TL) = L/ 999 (0.17")

CSI: TC=0.17/1.00 (E-F:1) , BC=0.60/1.00 (H-I:2) , WB=0.40/1.00 (E-H:1) , SSI=0.20/1.00 (H-I:3)

DOL LUMBER=1.00 NAIL=1.00 LS BEND=1.10 COMP=1.10 SHEAR=1.10 TENS= 1.10

COMPANION LIVE LOAD FACTOR = 1.00

TRUSS PLATE MANUFACTURER IS NOT RESPONSIBLE FOR QUALITY CONTROL IN THE TRUSS MANUFACTURING PLANT .

NAIL VALUES

| PLATE | GRIP(DRY) (PSI) MAX | MIN | SHEAR (PLI) MAX | MIN | SECTION (PLI) MAX | MIN |
|---|---|---|---|---|---|---|
| MT20 | 618 | 354 | 1667 | 788 | 1987 | 1656 |

PLATE PLACEMENT TOL. = 0.250 inches

PLATE ROTATION TOL. = 5.0 Deg.

JSI GRIP= 0.83 (E) (INPUT = 0.90 )
JSI METAL= 0.39 (E) (INPUT = 1.00 )

LICENSED PROFESSIONAL ENGINEER
02/22/19
H. J. G ALVES
100009024
PROVINCE OF ONTARIO

DWG NO. TAM 79904089
STRUCTURAL
COMPONENT ONLY

| JOB NAME | TRUSS NAME | QUANTITY | PLY | JOB DESC. CONDO BLOCK 1UNITS 1- 3 | DRWG NO. |
|---|---|---|---|---|---|
| 401458 | G14 | 1 | 1 | TRUSS DESC. | |

Tamarack Roof Truss, Burlington

Version 8.230 S Nov 17 2018 MiTek Industries, Inc. Fri Feb 22 07:51:37 2019 Page 1

ID:_YsKd95knv21l1np5yhk1ZySw5f-y7MkMc7Rs0ZkoHMFN5XJNfTe8H2XRVTzSeYQI?zifoa

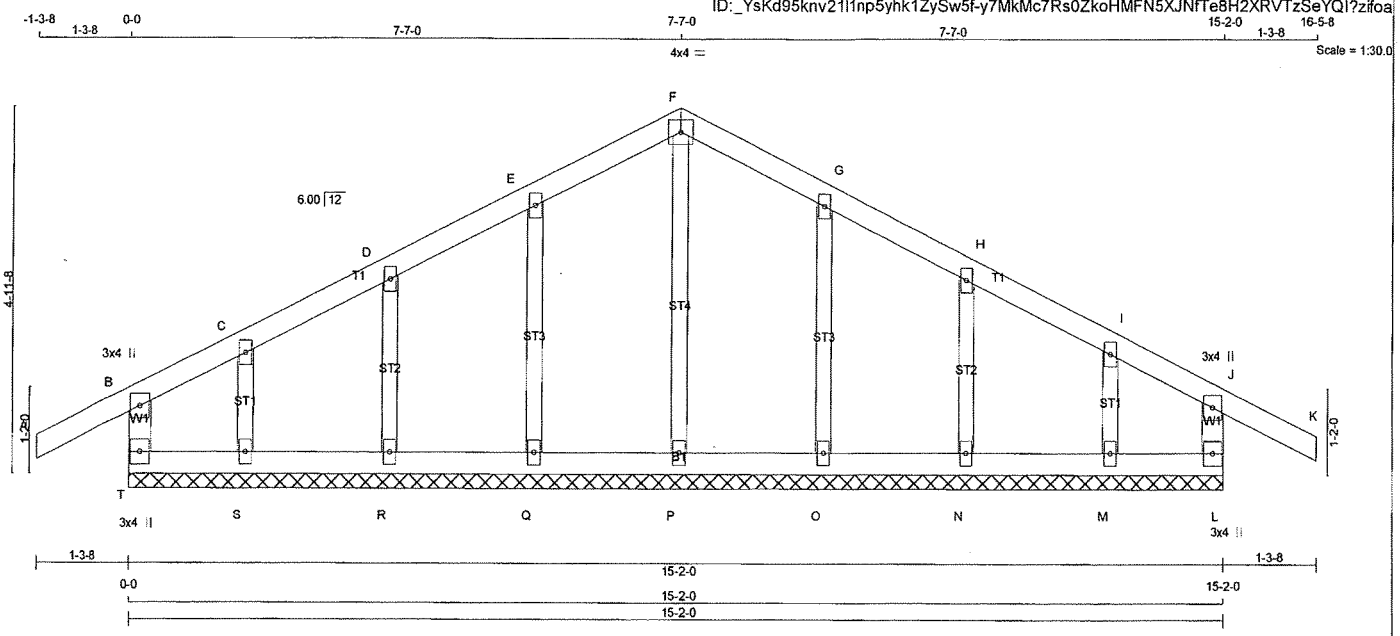


TOTAL WEIGHT = 57 lb

**LUMBER**

N. L. G. A. RULES

| CHORDS | SIZE | | LUMBER | DESCR. |
|---|---|---|---|---|
| T - B | 2x4 | DRY | No.2 | SPF |
| A - F | 2x4 | DRY | No.2 | SPF |
| F - K | 2x4 | DRY | No.2 | SPF |
| L - J | 2x4 | DRY | No.2 | SPF |
| T - L | 2x4 | DRY | No.2 | SPF |
| ALL WEBS | 2x3 | DRY | No.2 | SPF |
| ALL GABLE WEBS | 2x3 | DRY | No.2 | SPF |

DRY: SEASONED LUMBER.

GABLE STUDS SPACED AT 2-0-0 OC.

**PLATES (table is in inches)**

| JT | TYPE | PLATES | W | LEN | Y | X |
|---|---|---|---|---|---|---|
| B | TMV+p | MT20 | 3.0 | 4.0 | | |
| C, D, E, G, H, I | | | | | | |
| C | TMW+w | MT20 | 2.0 | 4.0 | | |
| F | TTW-p | MT20 | 4.0 | 4.0 | | |
| J | TMV+p | MT20 | 3.0 | 4.0 | | |
| L | BMV1+p | MT20 | 3.0 | 4.0 | | |
| M, N, O, P, Q, R, S | | | | | | |
| M | BMW1+w | MT20 | 2.0 | 4.0 | | |
| T | BMV1+p | MT20 | 3.0 | 4.0 | | |

**DIMENSIONS, SUPPORTS AND LOADINGS SPECIFIED BY FABRICATOR TO BE VERIFIED BY BUILDING DESIGNER**

**BEARINGS**

THIS TRUSS DESIGNED FOR CONTINUOUS BEARINGS.

THIS TRUSS REQUIRES RIGID SHEATHING ON EXPOSED FACE.

BEARING MATERIAL TO BE SPF NO.2 OR BETTER AT JOINT(S)

**BRACING**

TOP CHORD TO BE SHEATHED OR MAX. PURLIN SPACING = 10.00 FT.
MAX. UNBRACED BOTTOM CHORD LENGTH = 6.25 FT OR RIGID CEILING DIRECTLY APPLIED.

ALL PITCH BREAKS AND PERIMETER CORNER JOINTS MUST BE LATERALLY RESTRAINED.

**LOADING**

TOTAL LOAD CASES: (4)

CHORDS

| MEMB. FR-TO | MAX. FORCE (LBS) | FACTORED VERT. LOAD (PLF) FROM | TO | LC1 MAX CSI (LC) | MAX. UNBRAC LENGTH |
|---|---|---|---|---|---|
| T- B | -176 / 0 | 0.0 | 0.0 | 0.04 (1) | 7.81 |
| A- B | 0 / 24 | -77.7 | -77.7 | 0.10 (1) | 10.00 |
| B- C | -2 / 11 | -77.7 | -77.7 | 0.06 (1) | 10.00 |
| C- D | 0 / 28 | -77.7 | -77.7 | 0.04 (1) | 10.00 |
| D- E | 0 / 29 | -77.7 | -77.7 | 0.04 (1) | 10.00 |
| E- F | 0 / 32 | -77.7 | -77.7 | 0.04 (1) | 10.00 |
| F- G | 0 / 32 | -77.7 | -77.7 | 0.04 (1) | 10.00 |
| G- H | 0 / 29 | -77.7 | -77.7 | 0.04 (1) | 10.00 |
| H- I | 0 / 28 | -77.7 | -77.7 | 0.04 (1) | 10.00 |
| I- J | -2 / 11 | -77.7 | -77.7 | 0.06 (1) | 10.00 |
| J- K | 0 / 24 | -77.7 | -77.7 | 0.10 (1) | 10.00 |
| L- J | -176 / 0 | 0.0 | 0.0 | 0.04 (1) | 7.81 |
| T- S | -18 / 0 | -39.5 | -39.5 | 0.02 (3) | 6.25 |
| S- R | -22 / 0 | -39.5 | -39.5 | 0.03 (3) | 6.25 |
| R- Q | -26 / 0 | -39.5 | -39.5 | 0.03 (3) | 6.25 |
| Q- P | -29 / 0 | -39.5 | -39.5 | 0.02 (3) | 6.25 |
| P- O | -29 / 0 | -39.5 | -39.5 | 0.02 (3) | 6.25 |
| O- N | -26 / 0 | -39.5 | -39.5 | 0.03 (3) | 6.25 |
| N- M | -22 / 0 | -39.5 | -39.5 | 0.03 (3) | 6.25 |
| M- L | -18 / 0 | -39.5 | -39.5 | 0.02 (3) | 6.25 |

WEBS

| MEMB. FR-TO | MAX. FORCE (LBS) | MAX CSI (LC) |
|---|---|---|
| P- F | -188 / 0 | 0.07 (1) |
| Q- E | -157 / 0 | 0.04 (1) |
| R- D | -161 / 0 | 0.03 (1) |
| S- C | -107 / 0 | 0.02 (1) |
| O- G | -157 / 0 | 0.04 (1) |
| N- H | -161 / 0 | 0.03 (1) |
| M- I | -107 / 0 | 0.02 (1) |

[M]

**DESIGN CRITERIA**

SPECIFIED LOADS:

| | | | | |
|---|---|---|---|---|
| TOP CH. | LL | = | 20.9 | PSF |
| | DL | = | 6.0 | PSF |
| BOT CH. | LL | = | 10.5 | PSF |
| | DL | = | 7.4 | PSF |
| TOTAL LOAD | | = | 44.8 | PSF |

**SPACING = 24.0 IN. C/C**

THIS TRUSS IS DESIGNED FOR RESIDENTIAL OR SMALL BUILDING REQUIREMENTS OF PART 9, NBCC 2010, NBCC 2015

THIS DESIGN COMPLIES WITH:
- PART 9 OF BCBC 2018 , OBC 2012
- CSA 086-09, CSA 086-14
- TPIC 2011, TPIC 2014

DESIGN ASSUMPTIONS
-OVERHANG NOT TO BE ALTERED OR CUT OFF.

(60 % OF 20.9 P.S.F. G.S.L. PLUS 8.4 P.S.F. RAIN LOAD) EQUALS 20.9 P.S.F. SPECIFIED ROOF LIVE LOAD

CSI: TC=0.10/1.00 (A-B:1) , BC=0.03/1.00 (Q-R:3) , WB=0.07/1.00 (F-P:1) , SSI=0.07/1.00 (A-B:1)

DOL LUMBER=1.00 NAIL=1.00 LS BEND=1.10 COMP=1.10 SHEAR=1.10 TENS= 1.10

COMPANION LIVE LOAD FACTOR = 1.00

TRUSS PLATE MANUFACTURER IS NOT RESPONSIBLE FOR QUALITY CONTROL IN THE TRUSS MANUFACTURING PLANT .

NAIL VALUES

| PLATE | GRIP(DRY) (PSI) MAX | MIN | SHEAR (PLI) MAX | MIN | SECTION (PLI) MAX | MIN |
|---|---|---|---|---|---|---|
| MT20 | 618 | 354 | 1667 | 788 | 1987 | 1656 |

PLATE PLACEMENT TOL. = 0.250 inches

PLATE ROTATION TOL. = 5.0 Deg.

JSI GRIP= 0.11 (F) (INPUT = 0.90 )
JSI METAL= 0.07 (H) (INPUT = 1.00 )

LICENSED PROFESSIONAL ENGINEER
02/22/19
H. J. G ALVES
100009024
PROVINCE OF ONTARIO

DWG NO. TAM 71904090
STRUCTURAL
COMPONENT ONLY

| JOB NAME | TRUSS NAME | QUANTITY | PLY | JOB DESC. | DRWG NO. |
|---|---|---|---|---|---|
| 401458 | T15 | 1 | 1 | CONDO BLOCK 1UNITS 1- 3<br>TRUSS DESC. | |

Tamarack Roof Truss, Burlington

Version 8.230 S Nov 17 2018 MiTek Industries, Inc. Fri Feb 22 07:51:59 2019 Page 1

ID:_YsKd95knv21l1np5yhk1ZySw5f-JMh2_7OFhmLcRf2UgjwTHINI68Q5bI7CW3tb4jzifoE

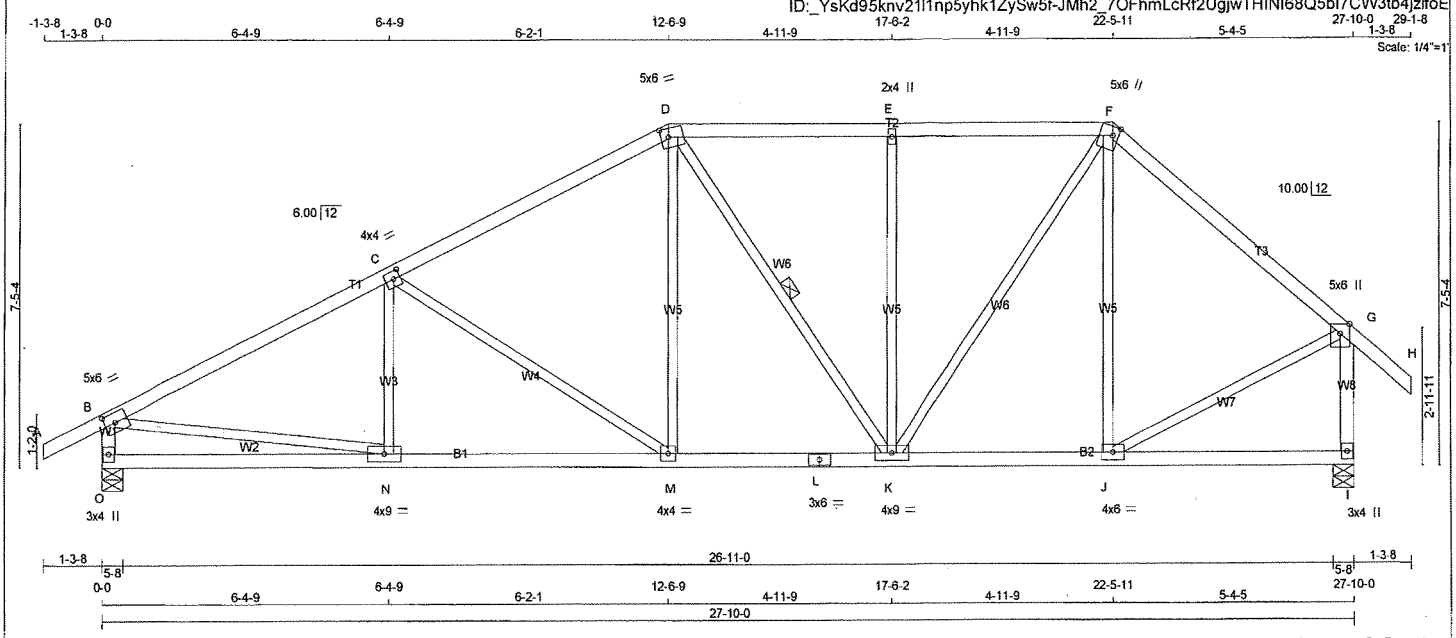


TOTAL WEIGHT = 123 lb

[M][F]

**LUMBER**

N. L. G. A. RULES

| CHORDS | SIZE | | LUMBER | DESCR. |
|---|---|---|---|---|
| A - D | 2x4 | DRY | No.2 | SPF |
| D - F | 2x4 | DRY | No.2 | SPF |
| F - H | 2x4 | DRY | No.2 | SPF |
| O - B | 2x4 | DRY | No.2 | SPF |
| I - G | 2x4 | DRY | No.2 | SPF |
| O - L | 2x4 | DRY | No.2 | SPF |
| L - I | 2x4 | DRY | No.2 | SPF |
| ALL WEBS EXCEPT | 2x3 | DRY | No.2 | SPF |

DRY: SEASONED LUMBER.

**PLATES (table is in inches)**

| JT | TYPE | PLATES | W | LEN | Y | X |
|---|---|---|---|---|---|---|
| B | TMVW-t | MT20 | 5.0 | 6.0 | 2.50 | 2.75 |
| C | TMWW-t | MT20 | 4.0 | 4.0 | 2.00 | 1.75 |
| D | TTWW-m | MT20 | 5.0 | 6.0 | 2.25 | 2.00 |
| E | TMW+w | MT20 | 2.0 | 4.0 | | |
| F | TTWW+m | MT20 | 5.0 | 6.0 | 2.25 | 1.50 |
| G | TMVW+p | MT20 | 5.0 | 6.0 | Edge | |
| I | BMV1+p | MT20 | 3.0 | 4.0 | | |
| J | BMWW-t | MT20 | 4.0 | 6.0 | | |
| K | BMWWW-t | MT20 | 4.0 | 9.0 | | |
| L | BS-t | MT20 | 3.0 | 6.0 | | |
| M | BMWW-t | MT20 | 4.0 | 4.0 | | |
| N | BMWW-t | MT20 | 4.0 | 9.0 | | |
| O | BMV1+p | MT20 | 3.0 | 4.0 | | |

Edge - INDICATES REFERENCE CORNER OF PLATE TOUCHES EDGE OF CHORD.

**DIMENSIONS, SUPPORTS AND LOADINGS SPECIFIED BY FABRICATOR TO BE VERIFIED BY BUILDING DESIGNER**

**BEARINGS**

| JT | FACTORED GROSS REACTION VERT | HORZ | MAXIMUM FACTORED GROSS REACTION DOWN | HORZ | UPLIFT | INPUT BRG IN-SX | REQRD BRG IN-SX |
|---|---|---|---|---|---|---|---|
| O | 1736 | 0 | 1736 | 0 | 0 | 5-8 | 5-8 |
| I | 1739 | 0 | 1739 | 0 | 0 | 5-8 | 5-8 |

**UNFACTORED REACTIONS**

| JT | 1ST LCASE COMBINED | MAX./MIN. COMPONENT REACTIONS SNOW | LIVE | PERM.LIVE | WIND | DEAD | SOIL |
|---|---|---|---|---|---|---|---|
| O | 1320 | 638 / 0 | 292 / 0 | 0 / 0 | 0 / 0 | 389 / 0 | 0 / 0 |
| I | 1321 | 640 / 0 | 292 / 0 | 0 / 0 | 0 / 0 | 390 / 0 | 0 / 0 |

BEARING MATERIAL TO BE SPF NO.2 OR BETTER AT JOINT(S) O, I

**BRACING**

TOP CHORD TO BE SHEATHED OR MAX. PURLIN SPACING = 4.01 FT.
MAX. UNBRACED BOTTOM CHORD LENGTH = 10.00 FT OR RIGID CEILING DIRECTLY APPLIED.

ALL PITCH BREAKS AND PERIMETER CORNER JOINTS MUST BE LATERALLY RESTRAINED.

1 LATERAL BRACE(S) AT 1/ 2 LENGTH OF D-K.

END VERTICAL(S) MUST BE SHEATHED OR HAVE BRACES AS INDICATED IN THE MAX. UNBRACED LENGTH COLUMN OF THE TABLE BELOW

**LOADING**

TOTAL LOAD CASES: (4)

CHORDS

| MEMB. FR-TO | MAX. FACTORED FORCE (LBS) | FACTORED VERT. LOAD (PLF) FROM | TO | LC1 | MAX CSI (LC) | MAX. UNBRAC LENGTH |
|---|---|---|---|---|---|---|
| A- B | 0 / 24 | -77.7 | -77.7 | 0.10 (1) | 10.00 | |
| B- C | -2331 / 0 | -77.7 | -77.7 | 0.52 (1) | 4.01 | |
| C- D | -1795 / 0 | -77.7 | -77.7 | 0.45 (1) | 4.53 | |
| D- E | -1521 / 0 | -77.7 | -77.7 | 0.27 (1) | 5.05 | |
| E- F | -1521 / 0 | -77.7 | -77.7 | 0.27 (1) | 5.05 | |
| F- G | -1320 / 0 | -77.7 | -77.7 | 0.32 (1) | 5.28 | |
| G- H | 0 / 34 | -77.7 | -77.7 | 0.11 (1) | 10.00 | |
| O- B | -1634 / 0 | 0.0 | 0.0 | 0.17 (1) | 6.48 | |
| I- G | -1652 / 0 | 0.0 | 0.0 | 0.27 (1) | 6.45 | |
| O- N | 0 / 0 | -39.5 | -39.5 | 0.30 (3) | 10.00 | |
| N- M | 0 / 2107 | -39.5 | -39.5 | 0.58 (2) | 10.00 | |
| M- L | 0 / 1590 | -39.5 | -39.5 | 0.40 (2) | 10.00 | |
| L- K | 0 / 1590 | -39.5 | -39.5 | 0.40 (2) | 10.00 | |
| K- J | 0 / 1009 | -39.5 | -39.5 | 0.35 (2) | 10.00 | |
| J- I | 0 / 0 | -39.5 | -39.5 | 0.21 (3) | 10.00 | |

WEBS

| MEMB. FR-TO | MAX. FACTORED FORCE (LBS) | MAX CSI (LC) |
|---|---|---|
| N- C | -3 / 205 | 0.05 (3) |
| C- M | -625 / 0 | 0.69 (1) |
| M- D | 0 / 583 | 0.13 (2) |
| D- K | -124 / 0 | 0.06 (2) |
| K- E | -467 / 0 | 0.46 (1) |
| K- F | 0 / 896 | 0.20 (1) |
| J- F | -250 / 24 | 0.25 (1) |
| B- N | 0 / 2126 | 0.48 (1) |
| J- G | 0 / 1124 | 0.25 (1) |

LICENSED PROFESSIONAL ENGINEER
02/22/19
M. J. G. ALVES
100009024
PROVINCE OF ONTARIO

**DESIGN CRITERIA**

SPECIFIED LOADS:

| | | | | |
|---|---|---|---|---|
| TOP CH. | LL | = | 20.9 | PSF |
| | DL | = | 6.0 | PSF |
| BOT CH. | LL | = | 10.5 | PSF |
| | DL | = | 7.4 | PSF |
| TOTAL LOAD | | = | 44.8 | PSF |

**SPACING = 24.0 IN. C/C**

LOADING IN FLAT SECTION BASED ON A SLOPE OF 2.00/12 MINIMUM

THIS TRUSS IS DESIGNED FOR RESIDENTIAL OR SMALL BUILDING REQUIREMENTS OF PART 9, NBCC 2010, NBCC 2015

THIS DESIGN COMPLIES WITH:
- PART 9 OF BCBC 2018 , OBC 2012
- CSA 086-09, CSA 086-14
- TPIC 2011, TPIC 2014

(60 % OF 20.9 P.S.F. G.S.L. PLUS 8.4 P.S.F. RAIN LOAD) EQUALS 20.9 P.S.F. SPECIFIED ROOF LIVE LOAD

ALLOWABLE DEFL.(LL)= L/360 (0.93")
CALCULATED VERT. DEFL.(LL) = L/ 999 (0.09")
ALLOWABLE DEFL.(TL)= L/360 (0.93")
CALCULATED VERT. DEFL.(TL) = L/ 999 (0.16")

CSI: TC=0.52/1.00 (B-C:1) , BC=0.58/1.00 (M-N:2) , WB=0.69/1.00 (C-M:1) , SSI=0.21/1.00 (B-C:1)

DOL LUMBER=1.00 NAIL=1.00 LS BEND=1.10 COMP=1.10 SHEAR=1.10 TENS= 1.10

COMPANION LIVE LOAD FACTOR = 1.00

TRUSS PLATE MANUFACTURER IS NOT RESPONSIBLE FOR QUALITY CONTROL IN THE TRUSS MANUFACTURING PLANT .

NAIL VALUES

| PLATE | GRIP(DRY) (PSI) MAX | MIN | SHEAR (PLI) MAX | MIN | SECTION (PLI) MAX | MIN |
|---|---|---|---|---|---|---|
| MT20 | 618 | 354 | 1667 | 788 | 1987 | 1656 |

PLATE PLACEMENT TOL. = 0.250 inches

PLATE ROTATION TOL. = 5.0 Deg.

USI GRIP= 0.85 (B) (INPUT = 0.90 )
USI METAL= 0.62 (B) (INPUT = 1.00 )

DWG NO. TAM T1204091
STRUCTURAL
COMPONENT ONLY

| JOB NAME | TRUSS NAME | QUANTITY | PLY | JOB DESC. | DRWG NO. |
|---|---|---|---|---|---|
| 401458 | T15X | 1 | 1 | CONDO BLOCK 1UNITS 1- 3<br>TRUSS DESC. | |

Tamarack Roof Truss, Burlington

Version 8.230 S Nov 17 2018 MiTek Industries, Inc. Fri Feb 22 07:52:00 2019 Page 1

ID:_YsKd95knv21l1np5yhk1ZySw5f-nYFRBTPtS4TT3pdgDQRipVwThYl8Kh3Mkjd8c9zifoD

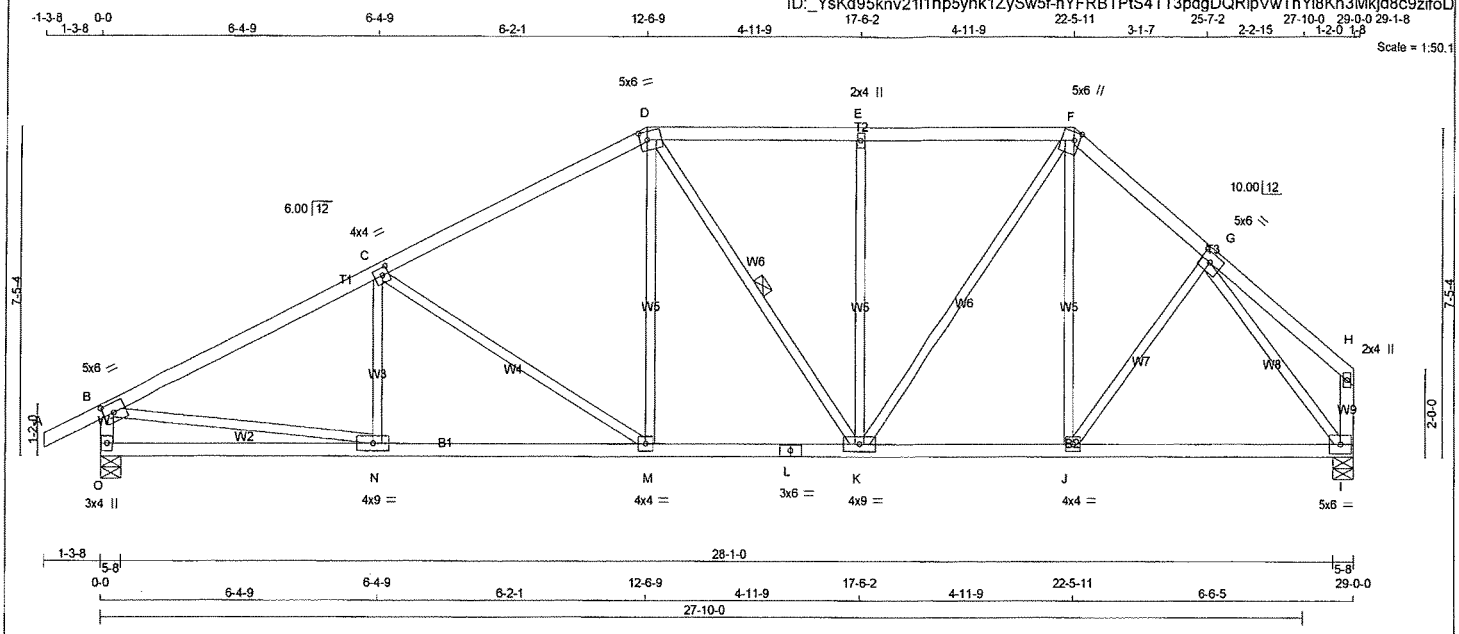


TOTAL WEIGHT = 127 lb

[M][F]

**LUMBER**

N. L. G. A. RULES

| CHORDS | SIZE | | LUMBER | DESCR. |
|---|---|---|---|---|
| A - D | 2x4 | DRY | No.2 | SPF |
| D - F | 2x4 | DRY | No.2 | SPF |
| F - H | 2x4 | DRY | No.2 | SPF |
| O - B | 2x4 | DRY | No.2 | SPF |
| O - L | 2x4 | DRY | No.2 | SPF |
| L - I | 2x4 | DRY | No.2 | SPF |
| ALL WEBS | 2x3 | DRY | No.2 | SPF |
| EXCEPT | | | | |
| I - H | 2x4 | DRY | No.2 | SPF |

DRY: SEASONED LUMBER.

**PLATES (table is in inches)**

| JT | TYPE | PLATES | W | LEN | Y | X |
|---|---|---|---|---|---|---|
| B | TMVW-t | MT20 | 5.0 | 6.0 | 2.50 | 2.75 |
| C | TMWW-t | MT20 | 4.0 | 4.0 | 2.00 | 1.75 |
| D | TTWW-m | MT20 | 5.0 | 6.0 | 2.25 | 2.00 |
| E | TMW+w | MT20 | 2.0 | 4.0 | | |
| F | TTWW+m | MT20 | 5.0 | 6.0 | 2.25 | 1.50 |
| G | TMWW-t | MT20 | 5.0 | 6.0 | 2.50 | 2.75 |
| H | TMW+w | MT20 | 2.0 | 4.0 | | |
| I | BMWW1-t | MT20 | 5.0 | 6.0 | | |
| J | BMWW-t | MT20 | 4.0 | 4.0 | | |
| K | BMWWW-t | MT20 | 4.0 | 9.0 | | |
| L | BS-t | MT20 | 3.0 | 6.0 | | |
| M | BMWW-t | MT20 | 4.0 | 4.0 | | |
| N | BMWW-t | MT20 | 4.0 | 9.0 | | |
| O | BMV1+p | MT20 | 3.0 | 4.0 | | |

**DIMENSIONS, SUPPORTS AND LOADINGS SPECIFIED BY FABRICATOR TO BE VERIFIED BY BUILDING DESIGNER**

**BEARINGS**

| JT | FACTORED GROSS REACTION VERT | HORZ | MAXIMUM FACTORED GROSS REACTION DOWN | HORZ | UPLIFT | INPUT BRG IN-SX | REQRD BRG IN-SX |
|---|---|---|---|---|---|---|---|
| O | 1796 | 0 | 1796 | 0 | 0 | 5-8 | 5-8 |
| I | 1698 | 0 | 1698 | 0 | 0 | 5-8 | 5-8 |

**UNFACTORED REACTIONS**

| JT | 1ST LCASE COMBINED | MAX./MIN. COMPONENT REACTIONS SNOW | LIVE | PERM.LIVE | WIND | DEAD | SOIL |
|---|---|---|---|---|---|---|---|
| O | 1366 | 660 / 0 | 303 / 0 | 0 / 0 | 0 / 0 | 403 / 0 | 0 / 0 |
| I | 1298 | 607 / 0 | 303 / 0 | 0 / 0 | 0 / 0 | 388 / 0 | 0 / 0 |

BEARING MATERIAL TO BE SPF NO.2 OR BETTER AT JOINT(S) O, I

**BRACING**

TOP CHORD TO BE SHEATHED OR MAX. PURLIN SPACING = 3.92 FT.
MAX. UNBRACED BOTTOM CHORD LENGTH = 10.00 FT OR RIGID CEILING DIRECTLY APPLIED.

ALL PITCH BREAKS AND PERIMETER CORNER JOINTS MUST BE LATERALLY RESTRAINED.

1 LATERAL BRACE(S) AT 1/ 2 LENGTH OF D-K.

END VERTICAL(S) MUST BE SHEATHED OR HAVE BRACES AS INDICATED IN THE MAX. UNBRACED LENGTH COLUMN OF THE TABLE BELOW

**LOADING**

TOTAL LOAD CASES: (4)

CHORDS

| MEMB. FR-TO | MAX. FACTORED FORCE (LBS) | FACTORED VERT. LOAD (PLF) FROM | TO | LC1 | MAX CSI (LC) | MAX. UNBRAC LENGTH |
|---|---|---|---|---|---|---|
| A- B | 0 / 24 | -77.7 | -77.7 | 0.10 (1) | 10.00 | |
| B- C | -2435 / 0 | -77.7 | -77.7 | 0.53 (1) | 3.92 | |
| C- D | -1913 / 0 | -77.7 | -77.7 | 0.46 (1) | 4.40 | |
| D- E | -1666 / 0 | -77.7 | -77.7 | 0.27 (1) | 4.87 | |
| E- F | -1666 / 0 | -77.7 | -77.7 | 0.27 (1) | 4.87 | |
| F- G | -1585 / 0 | -77.7 | -77.7 | 0.12 (1) | 5.15 | |
| G- H | 0 / 23 | -77.7 | -77.7 | 0.12 (1) | 10.00 | |
| O- B | -1693 / 0 | 0.0 | 0.0 | 0.17 (1) | 6.39 | |
| O- N | 0 / 0 | -39.5 | -39.5 | 0.30 (3) | 10.00 | |
| N- M | 0 / 2201 | -39.5 | -39.5 | 0.59 (2) | 10.00 | |
| M- L | 0 / 1695 | -39.5 | -39.5 | 0.42 (2) | 10.00 | |
| L- K | 0 / 1695 | -39.5 | -39.5 | 0.42 (2) | 10.00 | |
| K- J | 0 / 1202 | -39.5 | -39.5 | 0.44 (2) | 10.00 | |
| J- I | 0 / 1061 | -39.5 | -39.5 | 0.42 (2) | 10.00 | |

WEBS

| MEMB. FR-TO | MAX. FACTORED FORCE (LBS) | MAX CSI (LC) |
|---|---|---|
| N- C | -16 / 197 | 0.05 (3) |
| C- M | -611 / 0 | 0.68 (1) |
| M- D | 0 / 579 | 0.13 (2) |
| D- K | -61 / 0 | 0.03 (2) |
| K- E | -466 / 0 | 0.46 (1) |
| K- F | 0 / 812 | 0.18 (1) |
| J- F | 0 / 181 | 0.04 (3) |
| B- N | 0 / 2221 | 0.50 (1) |
| I- H | -95 / 0 | 0.01 (1) |
| J- G | 0 / 246 | 0.06 (2) |
| G- I | -1839 / 0 | 0.91 (1) |

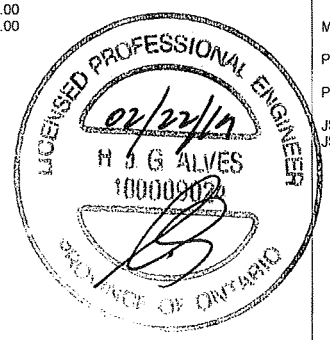


**DESIGN CRITERIA**

SPECIFIED LOADS:

| | | | | |
|---|---|---|---|---|
| TOP CH. | LL | = | 20.9 | PSF |
| | DL | = | 6.0 | PSF |
| BOT CH. | LL | = | 10.5 | PSF |
| | DL | = | 7.4 | PSF |
| TOTAL LOAD | | = | 44.8 | PSF |

**SPACING = 24.0 IN. C/C**

LOADING IN FLAT SECTION BASED ON A SLOPE OF 2.00/12 MINIMUM

THIS TRUSS IS DESIGNED FOR RESIDENTIAL OR SMALL BUILDING REQUIREMENTS OF PART 9, NBCC 2010, NBCC 2015

THIS DESIGN COMPLIES WITH:
- PART 9 OF BCBC 2018 , OBC 2012
- CSA 086-09, CSA 086-14
- TPIC 2011, TPIC 2014

(60 % OF 20.9 P.S.F. G.S.L. PLUS 8.4 P.S.F. RAIN LOAD) EQUALS 20.9 P.S.F. SPECIFIED ROOF LIVE LOAD

ALLOWABLE DEFL.(LL)= L/360 (0.96")
CALCULATED VERT. DEFL.(LL) = L/ 999 (0.09")
ALLOWABLE DEFL.(TL)= L/360 (0.96")
CALCULATED VERT. DEFL.(TL) = L/ 999 (0.17")

CSI: TC=0.53/1.00 (B-C:1) , BC=0.59/1.00 (M-N:2) , WB=0.91/1.00 (G-I:1) , SSI=0.21/1.00 (B-C:1)

DOL LUMBER=1.00 NAIL=1.00 LS BEND=1.10 COMP=1.10 SHEAR=1.10 TENS= 1.10

COMPANION LIVE LOAD FACTOR = 1.00

AUTOSOLVE LEFT HEEL ONLY

TRUSS PLATE MANUFACTURER IS NOT RESPONSIBLE FOR QUALITY CONTROL IN THE TRUSS MANUFACTURING PLANT .

NAIL VALUES

| PLATE | GRIP(DRY) (PSI) MAX | MIN | SHEAR (PLI) MAX | MIN | SECTION (PLI) MAX | MIN |
|---|---|---|---|---|---|---|
| MT20 | 618 | 354 | 1667 | 788 | 1987 | 1656 |

PLATE PLACEMENT TOL. = 0.250 inches

PLATE ROTATION TOL. = 5.0 Deg.

JSI GRIP= 0.89 (B) (INPUT = 0.90 )
JSI METAL= 0.65 (B) (INPUT = 1.00 )

DWG NO. TAM 7904092
STRUCTURAL
COMPONENT ONLY

| JOB NAME | TRUSS NAME | QUANTITY | PLY | JOB DESC. | DRWG NO. |
|---|---|---|---|---|---|
| 401458 | T16 | 1 | 1 | CONDO BLOCK 1UNITS 1- 3<br>TRUSS DESC. | |

Tamarack Roof Truss, Burlington

Version 8.230 S Nov 17 2018 MiTek Industries, Inc. Fri Feb 22 07:52:01 2019 Page 1

ID:_YsKd95knv21l1np5yhk1ZySw5f-FkppPpQVCObKhzCtn8yxMjTh2y7x3FTVzNMh8czifoC

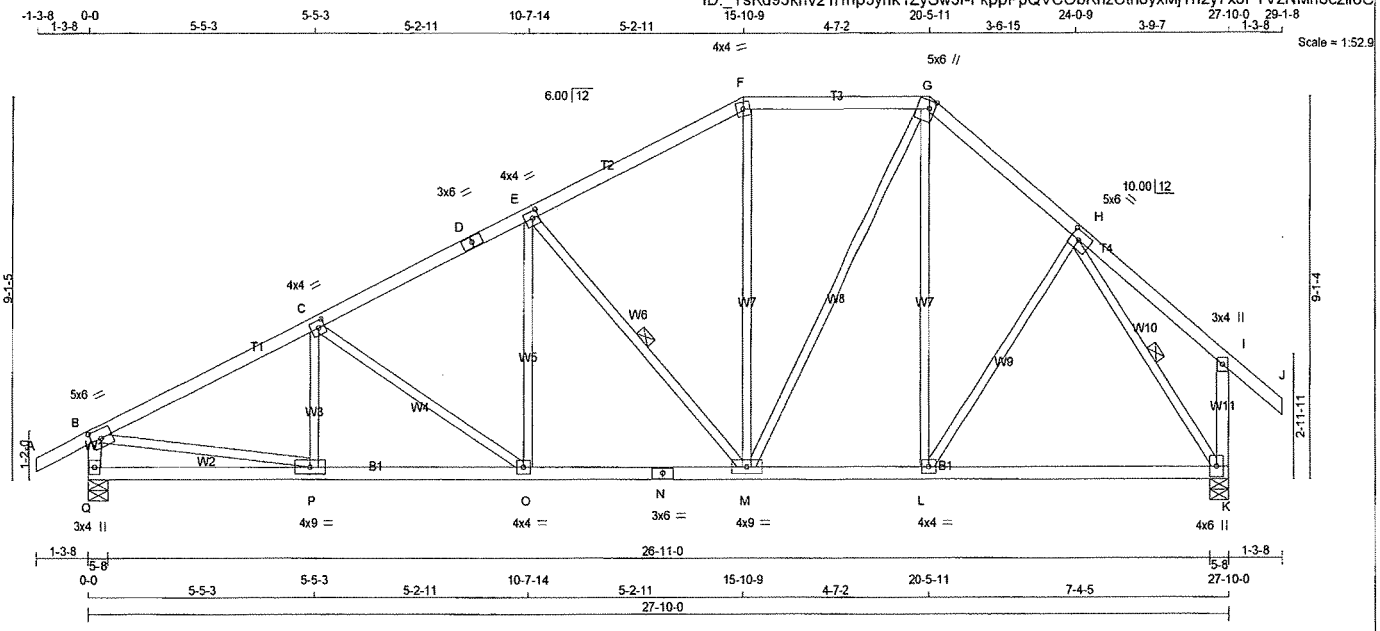


TOTAL WEIGHT = 131 lb

[M][F]

**LUMBER**

N. L. G. A. RULES

| CHORDS | SIZE | | LUMBER | DESCR. |
|---|---|---|---|---|
| A - D | 2x4 | DRY | No.2 | SPF |
| D - F | 2x4 | DRY | No.2 | SPF |
| F - G | 2x4 | DRY | No.2 | SPF |
| G - J | 2x4 | DRY | No.2 | SPF |
| Q - B | 2x4 | DRY | No.2 | SPF |
| K - I | 2x4 | DRY | No.2 | SPF |
| Q - N | 2x4 | DRY | No.2 | SPF |
| N - K | 2x4 | DRY | No.2 | SPF |
| ALL WEBS EXCEPT | 2x3 | DRY | No.2 | SPF |

DRY: SEASONED LUMBER.

**PLATES (table is in inches)**

| JT | TYPE | PLATES | W | LEN | Y | X |
|---|---|---|---|---|---|---|
| B | TMVW-t | MT20 | 5.0 | 6.0 | 2.50 | 2.75 |
| C | TMWW-t | MT20 | 4.0 | 4.0 | 2.00 | 1.75 |
| D | TS-t | MT20 | 3.0 | 6.0 | | |
| E | TMWW-t | MT20 | 4.0 | 4.0 | 2.00 | 1.75 |
| F | TTW-m | MT20 | 4.0 | 4.0 | | |
| G | TTWW+m | MT20 | 5.0 | 6.0 | 2.25 | 1.50 |
| H | TMWW-t | MT20 | 5.0 | 6.0 | 2.50 | 2.50 |
| I | TMV+p | MT20 | 3.0 | 4.0 | | |
| K | BMVW1+p | MT20 | 4.0 | 6.0 | | |
| L | BMWW-t | MT20 | 4.0 | 4.0 | | |
| M | BMWWW-t | MT20 | 4.0 | 9.0 | | |
| N | BS-t | MT20 | 3.0 | 6.0 | | |
| O | BMWW-t | MT20 | 4.0 | 4.0 | | |
| P | BMWW-t | MT20 | 4.0 | 9.0 | | |
| Q | BMV1+p | MT20 | 3.0 | 4.0 | | |

**DIMENSIONS, SUPPORTS AND LOADINGS SPECIFIED BY FABRICATOR TO BE VERIFIED BY BUILDING DESIGNER**

**BEARINGS**

| JT | FACTORED GROSS REACTION VERT | HORZ | MAXIMUM FACTORED GROSS REACTION DOWN | HORZ | UPLIFT | INPUT BRG IN-SX | REQRD BRG IN-SX |
|---|---|---|---|---|---|---|---|
| Q | 1736 | 0 | 1736 | 0 | 0 | 5-8 | 5-8 |
| K | 1739 | 0 | 1739 | 0 | 0 | 5-8 | 5-8 |

**UNFACTORED REACTIONS**

| JT | 1ST LCASE COMBINED | MAX./MIN. COMPONENT REACTIONS SNOW | LIVE | PERM.LIVE | WIND | DEAD | SOIL |
|---|---|---|---|---|---|---|---|
| Q | 1320 | 638 / 0 | 292 / 0 | 0 / 0 | 0 / 0 | 389 / 0 | 0 / 0 |
| K | 1321 | 640 / 0 | 292 / 0 | 0 / 0 | 0 / 0 | 390 / 0 | 0 / 0 |

BEARING MATERIAL TO BE SPF NO.2 OR BETTER AT JOINT(S) Q, K

**BRACING**

TOP CHORD TO BE SHEATHED OR MAX. PURLIN SPACING = 4.21 FT.
MAX. UNBRACED BOTTOM CHORD LENGTH = 10.00 FT OR RIGID CEILING DIRECTLY APPLIED.

ALL PITCH BREAKS AND PERIMETER CORNER JOINTS MUST BE LATERALLY RESTRAINED.

1 LATERAL BRACE(S) AT 1/ 2 LENGTH OF E-M, H-K.

END VERTICAL(S) MUST BE SHEATHED OR HAVE BRACES AS INDICATED IN THE MAX. UNBRACED LENGTH COLUMN OF THE TABLE BELOW

**LOADING**

TOTAL LOAD CASES: (4)

CHORDS

| MEMB. FR-TO | MAX. FACTORED FORCE (LBS) | FACTORED VERT. LOAD LC1 (PLF) FROM | TO | MAX CSI (LC) | MAX. UNBRAC LENGTH |
|---|---|---|---|---|---|
| A- B | 0 / 24 | -77.7 | -77.7 | 0.10 (1) | 10.00 |
| B- C | -2306 / 0 | -77.7 | -77.7 | 0.36 (1) | 4.21 |
| C- D | -1992 / 0 | -77.7 | -77.7 | 0.28 (1) | 4.55 |
| D- E | -1992 / 0 | -77.7 | -77.7 | 0.28 (1) | 4.55 |
| E- F | -1428 / 0 | -77.7 | -77.7 | 0.27 (1) | 5.19 |
| F- G | -1264 / 0 | -77.7 | -77.7 | 0.23 (1) | 5.47 |
| G- H | -1360 / 0 | -77.7 | -77.7 | 0.15 (1) | 5.43 |
| H- I | 0 / 20 | -77.7 | -77.7 | 0.16 (1) | 10.00 |
| I- J | 0 / 34 | -77.7 | -77.7 | 0.11 (1) | 10.00 |
| Q- B | -1646 / 0 | 0.0 | 0.0 | 0.17 (1) | 6.45 |
| K- I | -217 / 0 | 0.0 | 0.0 | 0.03 (1) | 7.81 |
| Q- P | 0 / 0 | -39.5 | -39.5 | 0.19 (3) | 10.00 |
| P- O | 0 / 2077 | -39.5 | -39.5 | 0.47 (2) | 10.00 |
| O- N | 0 / 1782 | -39.5 | -39.5 | 0.42 (2) | 10.00 |
| N- M | 0 / 1782 | -39.5 | -39.5 | 0.42 (2) | 10.00 |
| M- L | 0 / 1028 | -39.5 | -39.5 | 0.49 (2) | 10.00 |
| L- K | 0 / 899 | -39.5 | -39.5 | 0.46 (2) | 10.00 |

WEBS

| MEMB. FR-TO | MAX. FACTORED FORCE (LBS) | MAX CSI (LC) |
|---|---|---|
| P- C | -100 / 112 | 0.03 (3) |
| C- O | -358 / 0 | 0.26 (1) |
| O- E | 0 / 457 | 0.10 (2) |
| E- M | -799 / 0 | 0.36 (1) |
| M- F | 0 / 330 | 0.07 (2) |
| M- G | 0 / 519 | 0.12 (1) |
| L- G | 0 / 198 | 0.05 (3) |
| L- H | 0 / 249 | 0.06 (2) |
| B- P | 0 / 2103 | 0.47 (1) |
| H- K | -1664 / 0 | 0.51 (1) |

LICENSED PROFESSIONAL ENGINEER
02/22/19
H. J. G. ALVES
100009824
PROVINCE OF ONTARIO

**DESIGN CRITERIA**

SPECIFIED LOADS:

| | | | | |
|---|---|---|---|---|
| TOP CH. | LL | = | 20.9 | PSF |
| | DL | = | 6.0 | PSF |
| BOT CH. | LL | = | 10.5 | PSF |
| | DL | = | 7.4 | PSF |
| TOTAL LOAD | | = | 44.8 | PSF |

**SPACING = 24.0 IN. C/C**

LOADING IN FLAT SECTION BASED ON A SLOPE OF 2.00/12 MINIMUM

THIS TRUSS IS DESIGNED FOR RESIDENTIAL OR SMALL BUILDING REQUIREMENTS OF PART 9, NBCC 2010, NBCC 2015

THIS DESIGN COMPLIES WITH:
- PART 9 OF BCBC 2018 , OBC 2012
- CSA 086-09, CSA 086-14
- TPIC 2011, TPIC 2014

(60 % OF 20.9 P.S.F. G.S.L. PLUS 8.4 P.S.F. RAIN LOAD) EQUALS 20.9 P.S.F. SPECIFIED ROOF LIVE LOAD

ALLOWABLE DEFL.(LL)= L/360 (0.93")
CALCULATED VERT. DEFL.(LL) = L/ 999 (0.13")
ALLOWABLE DEFL.(TL)= L/360 (0.93")
CALCULATED VERT. DEFL.(TL) = L/ 999 (0.23")

CSI: TC=0.36/1.00 (B-C:1) , BC=0.49/1.00 (L-M:2) , WB=0.51/1.00 (H-K:1) , SSI=0.18/1.00 (K-L:3)

DOL LUMBER=1.00 NAIL=1.00 LS BEND=1.10 COMP=1.10 SHEAR=1.10 TENS= 1.10

COMPANION LIVE LOAD FACTOR = 1.00

AUTOSOLVE LEFT HEEL ONLY

TRUSS PLATE MANUFACTURER IS NOT RESPONSIBLE FOR QUALITY CONTROL IN THE TRUSS MANUFACTURING PLANT .

NAIL VALUES

| PLATE | GRIP(DRY) (PSI) MAX | MIN | SHEAR (PLI) MAX | MIN | SECTION (PLI) MAX | MIN |
|---|---|---|---|---|---|---|
| MT20 | 618 | 354 | 1667 | 788 | 1987 | 1656 |

PLATE PLACEMENT TOL. = 0.250 inches

PLATE ROTATION TOL. = 5.0 Deg.

CSI GRIP= 0.84 (H) (INPUT = 0.90 )
CSI METAL= 0.68 (N) (INPUT = 1.00 )

DWG NO. TAM 7904093
STRUCTURAL
COMPONENT ONLY

| JOB NAME | TRUSS NAME | QUANTITY | PLY | JOB DESC. CONDO BLOCK 1UNITS 1- 3 | DRWG NO. |
|---|---|---|---|---|---|
| 401458 | T16X | 1 | 1 | TRUSS DESC. | |

Tamarack Roof Truss, Burlington

Version 8.230 S Nov 17 2018 MiTek Industries, Inc. Fri Feb 22 07:52:02 2019 Page 1

ID:_YsKd95knv21I1np5yhk1ZySw5f-jxNBc9Q7zhjBI7m3LrTAuw?seMT7oi_fC16Fh2zifoB

Scale = 1:52.9

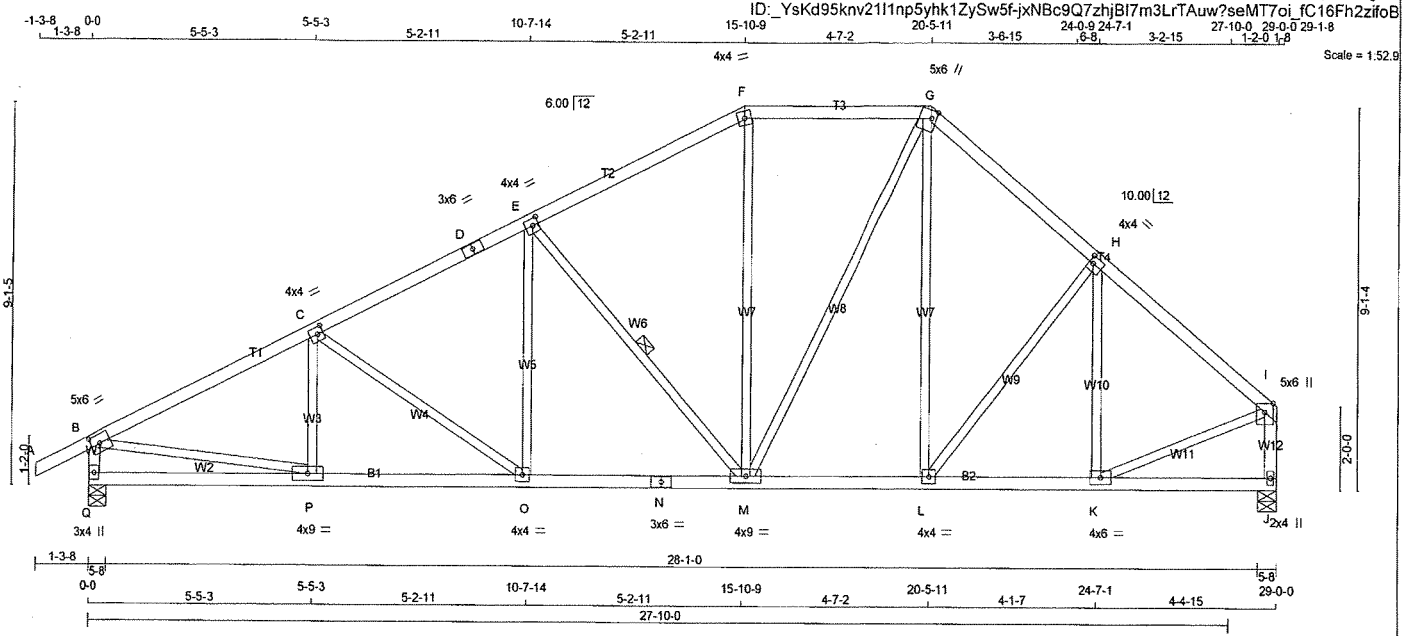


TOTAL WEIGHT = 133 lb

[M][F]

**LUMBER**

N. L. G. A. RULES

| CHORDS | SIZE | | LUMBER | DESCR. |
|---|---|---|---|---|
| A - D | 2x4 | DRY | No.2 | SPF |
| D - F | 2x4 | DRY | No.2 | SPF |
| F - G | 2x4 | DRY | No.2 | SPF |
| G - I | 2x4 | DRY | No.2 | SPF |
| Q - B | 2x4 | DRY | No.2 | SPF |
| Q - N | 2x4 | DRY | No.2 | SPF |
| N - J | 2x4 | DRY | No.2 | SPF |
| ALL WEBS | 2x3 | DRY | No.2 | SPF |
| EXCEPT | | | | |
| J - I | 2x4 | DRY | No.2 | SPF |

DRY: SEASONED LUMBER.

**PLATES (table is in inches)**

| JT | TYPE | PLATES | W | LEN | Y | X |
|---|---|---|---|---|---|---|
| B | TMVW-t | MT20 | 5.0 | 6.0 | 2.50 | 2.75 |
| C | TMWW-t | MT20 | 4.0 | 4.0 | 2.00 | 1.75 |
| D | TS-t | MT20 | 3.0 | 6.0 | | |
| E | TMWW-t | MT20 | 4.0 | 4.0 | 2.00 | 1.75 |
| F | TTW-m | MT20 | 4.0 | 4.0 | | |
| G | TTWW+m | MT20 | 5.0 | 6.0 | 2.25 | 1.50 |
| H | TMWW-t | MT20 | 4.0 | 4.0 | 2.00 | 1.25 |
| I | TMWW+w | MT20 | 5.0 | 6.0 | Edge | |
| J | BMW1+w | MT20 | 2.0 | 4.0 | | |
| K | BMWW-t | MT20 | 4.0 | 6.0 | | |
| L | BMWW-t | MT20 | 4.0 | 4.0 | | |
| M | BMWWW-t | MT20 | 4.0 | 9.0 | | |
| N | BS-t | MT20 | 3.0 | 6.0 | | |
| O | BMWW-t | MT20 | 4.0 | 4.0 | | |
| P | BMWW-t | MT20 | 4.0 | 9.0 | | |
| Q | BMV1+p | MT20 | 3.0 | 4.0 | | |

Edge - INDICATES REFERENCE CORNER OF PLATE TOUCHES EDGE OF CHORD.

**DIMENSIONS, SUPPORTS AND LOADINGS SPECIFIED BY FABRICATOR TO BE VERIFIED BY BUILDING DESIGNER**

**BEARINGS**

| JT | FACTORED GROSS REACTION VERT | HORZ | MAXIMUM FACTORED GROSS REACTION DOWN | HORZ | UPLIFT | INPUT BRG IN-SX | REQRD BRG IN-SX |
|---|---|---|---|---|---|---|---|
| Q | 1796 | 0 | 1796 | 0 | 0 | 5-8 | 5-8 |
| J | 1691 | 0 | 1691 | 0 | 0 | 5-8 | 5-8 |

**UNFACTORED REACTIONS**

| JT | 1ST LCASE COMBINED | MAX./MIN. COMPONENT REACTIONS SNOW | LIVE | PERM.LIVE | WIND | DEAD | SOIL |
|---|---|---|---|---|---|---|---|
| Q | 1366 | 660 / 0 | 303 / 0 | 0 / 0 | 0 / 0 | 403 / 0 | 0 / 0 |
| J | 1293 | 603 / 0 | 303 / 0 | 0 / 0 | 0 / 0 | 387 / 0 | 0 / 0 |

BEARING MATERIAL TO BE SPF NO.2 OR BETTER AT JOINT(S) Q, J

**BRACING**

TOP CHORD TO BE SHEATHED OR MAX. PURLIN SPACING = 4.12 FT.
MAX. UNBRACED BOTTOM CHORD LENGTH = 10.00 FT OR RIGID CEILING DIRECTLY APPLIED.

ALL PITCH BREAKS AND PERIMETER CORNER JOINTS MUST BE LATERALLY RESTRAINED.

1 LATERAL BRACE(S) AT 1/ 2 LENGTH OF E-M.

END VERTICAL(S) MUST BE SHEATHED OR HAVE BRACES AS INDICATED IN THE MAX. UNBRACED LENGTH COLUMN OF THE TABLE BELOW

**LOADING**

TOTAL LOAD CASES: (4)

CHORDS

| MEMB. FR-TO | MAX. FACTORED FORCE (LBS) | FACTORED VERT. LOAD LC1 (PLF) FROM | TO | MAX CSI (LC) | MAX. UNBRAC LENGTH |
|---|---|---|---|---|---|
| A- B | 0 / 24 | -77.7 | -77.7 | 0.10 (1) | 10.00 |
| B- C | -2408 / 0 | -77.7 | -77.7 | 0.37 (1) | 4.12 |
| C- D | -2105 / 0 | -77.7 | -77.7 | 0.29 (1) | 4.44 |
| D- E | -2105 / 0 | -77.7 | -77.7 | 0.29 (1) | 4.44 |
| E- F | -1553 / 0 | -77.7 | -77.7 | 0.28 (1) | 5.01 |
| F- G | -1376 / 0 | -77.7 | -77.7 | 0.23 (1) | 5.30 |
| G- H | -1523 / 0 | -77.7 | -77.7 | 0.20 (1) | 5.14 |
| H- I | -1528 / 0 | -77.7 | -77.7 | 0.20 (1) | 5.13 |
| Q- B | -1706 / 0 | 0.0 | 0.0 | 0.17 (1) | 6.36 |
| Q- P | 0 / 0 | -39.5 | -39.5 | 0.20 (3) | 10.00 |
| P- O | 0 / 2169 | -39.5 | -39.5 | 0.49 (2) | 10.00 |
| O- N | 0 / 1883 | -39.5 | -39.5 | 0.42 (2) | 10.00 |
| N- M | 0 / 1883 | -39.5 | -39.5 | 0.42 (2) | 10.00 |
| M- L | 0 / 1150 | -39.5 | -39.5 | 0.31 (2) | 10.00 |
| L- K | 0 / 1192 | -39.5 | -39.5 | 0.29 (2) | 10.00 |
| K- J | 0 / 0 | -39.5 | -39.5 | 0.13 (3) | 10.00 |

WEBS

| MEMB. FR-TO | MAX. FACTORED FORCE (LBS) | MAX CSI (LC) |
|---|---|---|
| P- C | -112 / 107 | 0.03 (1) |
| C- O | -346 / 0 | 0.25 (1) |
| O- E | 0 / 438 | 0.10 (2) |
| E- M | -783 / 0 | 0.35 (1) |
| M- F | 0 / 382 | 0.09 (2) |
| M- G | 0 / 497 | 0.11 (1) |
| L- G | 0 / 249 | 0.06 (2) |
| B- P | 0 / 2195 | 0.49 (1) |
| J- I | -1622 / 0 | 0.17 (1) |
| K- I | 0 / 1293 | 0.29 (1) |
| K- H | -314 / 0 | 0.15 (1) |
| L- H | -72 / 0 | 0.06 (1) |

LICENSED PROFESSIONAL ENGINEER
02/22/19
N. J. G. ALVES
100009924
PROVINCE OF ONTARIO

**DESIGN CRITERIA**

SPECIFIED LOADS:

| | | | | |
|---|---|---|---|---|
| TOP CH. | LL | = | 20.9 | PSF |
| | DL | = | 6.0 | PSF |
| BOT CH. | LL | = | 10.5 | PSF |
| | DL | = | 7.4 | PSF |
| TOTAL LOAD | | = | 44.8 | PSF |

**SPACING = 24.0 IN. C/C**

LOADING IN FLAT SECTION BASED ON A SLOPE OF 2.00/12 MINIMUM

THIS TRUSS IS DESIGNED FOR RESIDENTIAL OR SMALL BUILDING REQUIREMENTS OF PART 9, NBCC 2010, NBCC 2015

THIS DESIGN COMPLIES WITH:
- PART 9 OF BCBC 2018 , OBC 2012
- CSA 086-09, CSA 086-14
- TPIC 2011, TPIC 2014

(60 % OF 20.9 P.S.F. G.S.L. PLUS 8.4 P.S.F. RAIN LOAD) EQUALS 20.9 P.S.F. SPECIFIED ROOF LIVE LOAD

ALLOWABLE DEFL.(LL)= L/360 (0.96")
CALCULATED VERT. DEFL.(LL) = L/ 999 (0.08")
ALLOWABLE DEFL.(TL)= L/360 (0.96")
CALCULATED VERT. DEFL.(TL) = L/ 999 (0.15")

CSI: TC=0.37/1.00 (B-C:1) , BC=0.49/1.00 (O-P:2) , WB=0.49/1.00 (B-P:1) , SSI=0.17/1.00 (B-C:1)

DOL LUMBER=1.00 NAIL=1.00 LS BEND=1.10 COMP=1.10 SHEAR=1.10 TENS= 1.10

COMPANION LIVE LOAD FACTOR = 1.00

AUTOSOLVE LEFT HEEL ONLY

TRUSS PLATE MANUFACTURER IS NOT RESPONSIBLE FOR QUALITY CONTROL IN THE TRUSS MANUFACTURING PLANT .

NAIL VALUES

| PLATE | GRIP(DRY) (PSI) MAX | MIN | SHEAR (PLI) MAX | MIN | SECTION (PLI) MAX | MIN |
|---|---|---|---|---|---|---|
| MT20 | 618 | 354 | 1667 | 788 | 1987 | 1656 |

PLATE PLACEMENT TOL. = 0.250 inches

PLATE ROTATION TOL. = 5.0 Deg.

JSI GRIP= 0.88 (B) (INPUT = 0.90 )
JSI METAL= 0.66 (N) (INPUT = 1.00 )

DWG NO. TAM T1904094
STRUCTURAL
COMPONENT ONLY

| JOB NAME | TRUSS NAME | QUANTITY | PLY | JOB DESC. | DRWG NO. |
|---|---|---|---|---|---|
| 401458 | T17 | 1 | 1 | CONDO BLOCK 1UNITS 1- 3<br>TRUSS DESC. | |

Tamarack Roof Truss, Burlington

Version 8.230 S Nov 17 2018 MiTek Industries, Inc. Fri Feb 22 07:52:03 2019 Page 1

ID:_YsKd95knv21l1np5yhk1ZySw5f-B7xZqVRlk?r2wHLFvZ?PR8Y?JloEX7UoRhroDUzifoA

Scale = 1:60.2

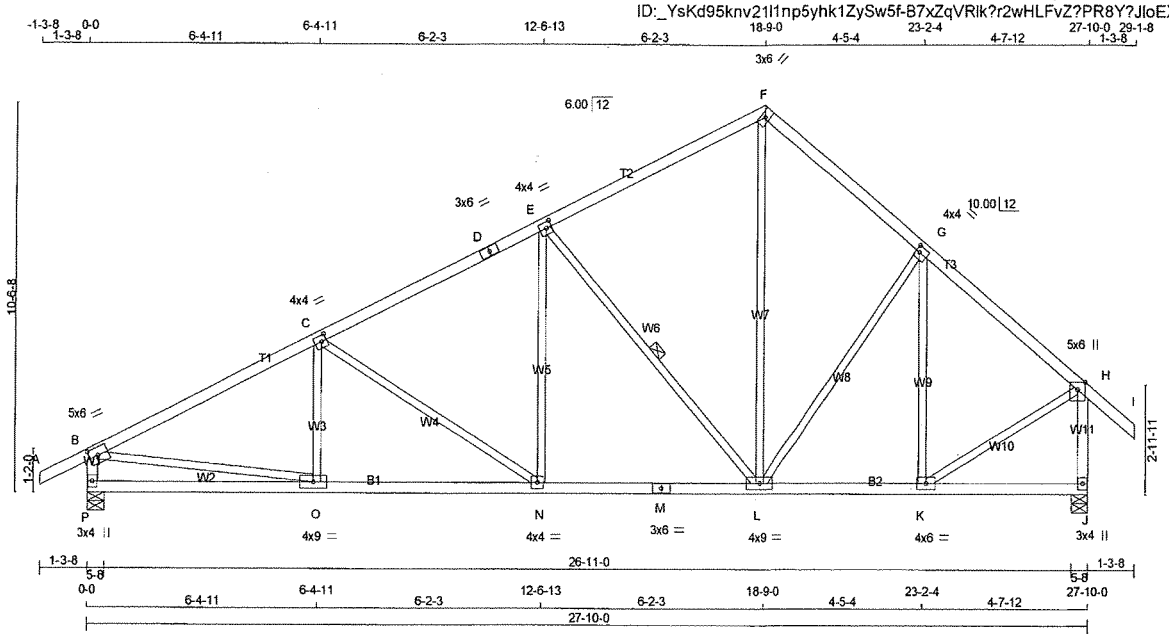


TOTAL WEIGHT = 127 lb

[M][F]

**LUMBER**

N. L. G. A. RULES

| CHORDS | SIZE | | LUMBER | DESCR. |
|---|---|---|---|---|
| A - D | 2x4 | DRY | No.2 | SPF |
| D - F | 2x4 | DRY | No.2 | SPF |
| F - I | 2x4 | DRY | No.2 | SPF |
| P - B | 2x4 | DRY | No.2 | SPF |
| J - H | 2x4 | DRY | No.2 | SPF |
| P - M | 2x4 | DRY | No.2 | SPF |
| M - J | 2x4 | DRY | No.2 | SPF |
| ALL WEBS EXCEPT | 2x3 | DRY | No.2 | SPF |

DRY: SEASONED LUMBER.

**PLATES (table is in inches)**

| JT | TYPE | PLATES | W | LEN | Y | X |
|---|---|---|---|---|---|---|
| B | TMVW-t | MT20 | 5.0 | 6.0 | 2.50 | 2.75 |
| C | TMWW-t | MT20 | 4.0 | 4.0 | 2.00 | 1.75 |
| D | TS-t | MT20 | 3.0 | 6.0 | | |
| E | TMWW-t | MT20 | 4.0 | 4.0 | 2.00 | 1.75 |
| F | TTW+h | MT20 | 3.0 | 6.0 | | |
| G | TMWW-t | MT20 | 4.0 | 4.0 | 2.00 | 1.25 |
| H | TMVW+p | MT20 | 5.0 | 6.0 | Edge | |
| J | BMV1+p | MT20 | 3.0 | 4.0 | | |
| K | BMWW-t | MT20 | 4.0 | 6.0 | | |
| L | BMWWW-t | MT20 | 4.0 | 9.0 | | |
| M | BS-t | MT20 | 3.0 | 6.0 | | |
| N | BMWW-t | MT20 | 4.0 | 4.0 | | |
| O | BMWW-t | MT20 | 4.0 | 9.0 | | |
| P | BMV1+p | MT20 | 3.0 | 4.0 | | |

Edge - INDICATES REFERENCE CORNER OF PLATE TOUCHES EDGE OF CHORD.

**DIMENSIONS, SUPPORTS AND LOADINGS SPECIFIED BY FABRICATOR TO BE VERIFIED BY BUILDING DESIGNER**

**BEARINGS**

| JT | FACTORED GROSS REACTION VERT | HORZ | MAXIMUM FACTORED GROSS REACTION DOWN | HORZ | UPLIFT | INPUT BRG IN-SX | REQRD BRG IN-SX |
|---|---|---|---|---|---|---|---|
| P | 1736 | 0 | 1736 | 0 | 0 | 5-8 | 5-8 |
| J | 1739 | 0 | 1739 | 0 | 0 | 5-8 | 5-8 |

**UNFACTORED REACTIONS**

| JT | 1ST LCASE COMBINED | MAX./MIN. COMPONENT REACTIONS SNOW | LIVE | PERM.LIVE | WIND | DEAD | SOIL |
|---|---|---|---|---|---|---|---|
| P | 1320 | 638 / 0 | 292 / 0 | 0 / 0 | 0 / 0 | 389 / 0 | 0 / 0 |
| J | 1321 | 640 / 0 | 292 / 0 | 0 / 0 | 0 / 0 | 390 / 0 | 0 / 0 |

BEARING MATERIAL TO BE SPF NO.2 OR BETTER AT JOINT(S) P, J

**BRACING**

TOP CHORD TO BE SHEATHED OR MAX. PURLIN SPACING = 4.05 FT.
MAX. UNBRACED BOTTOM CHORD LENGTH = 10.00 FT OR RIGID CEILING DIRECTLY APPLIED.

ALL PITCH BREAKS AND PERIMETER CORNER JOINTS MUST BE LATERALLY RESTRAINED.

1 LATERAL BRACE(S) AT 1/ 2 LENGTH OF E-L.

END VERTICAL(S) MUST BE SHEATHED OR HAVE BRACES AS INDICATED IN THE MAX. UNBRACED LENGTH COLUMN OF THE TABLE BELOW

**LOADING**

TOTAL LOAD CASES: (4)

CHORDS

| MEMB. FR-TO | MAX. FACTORED FORCE (LBS) | FACTORED VERT. LOAD (PLF) FROM | TO | LC1 MAX CSI (LC) | MAX. UNBRAC LENGTH |
|---|---|---|---|---|---|
| A- B | 0 / 24 | -77.7 | -77.7 | 0.10 (1) | 10.00 |
| B- C | -2314 / 0 | -77.7 | -77.7 | 0.50 (1) | 4.05 |
| C- D | -1823 / 0 | -77.7 | -77.7 | 0.38 (1) | 4.60 |
| D- E | -1823 / 0 | -77.7 | -77.7 | 0.38 (1) | 4.60 |
| E- F | -1132 / 0 | -77.7 | -77.7 | 0.37 (1) | 5.52 |
| F- G | -1311 / 0 | -77.7 | -77.7 | 0.22 (1) | 5.41 |
| G- H | -1288 / 0 | -77.7 | -77.7 | 0.23 (1) | 5.45 |
| H- I | 0 / 34 | -77.7 | -77.7 | 0.11 (1) | 10.00 |
| P- B | -1633 / 0 | 0.0 | 0.0 | 0.16 (1) | 6.48 |
| J- H | -1662 / 0 | 0.0 | 0.0 | 0.27 (1) | 6.43 |
| P- O | 0 / 0 | -39.5 | -39.5 | 0.28 (3) | 10.00 |
| O- N | 0 / 2088 | -39.5 | -39.5 | 0.56 (2) | 10.00 |
| N- M | 0 / 1630 | -39.5 | -39.5 | 0.44 (2) | 10.00 |
| M- L | 0 / 1630 | -39.5 | -39.5 | 0.44 (2) | 10.00 |
| L- K | 0 / 1009 | -39.5 | -39.5 | 0.31 (2) | 10.00 |
| K- J | 0 / 0 | -39.5 | -39.5 | 0.14 (3) | 10.00 |

WEBS

| MEMB. FR-TO | MAX. FACTORED FORCE (LBS) | MAX CSI (LC) |
|---|---|---|
| O- C | -5 / 197 | 0.05 (3) |
| C- N | -548 / 0 | 0.59 (1) |
| N- E | 0 / 578 | 0.13 (2) |
| E- L | -981 / 0 | 0.61 (1) |
| L- F | 0 / 995 | 0.22 (1) |
| L- G | -43 / 0 | 0.06 (1) |
| K- G | -382 / 0 | 0.30 (1) |
| B- O | 0 / 2107 | 0.47 (1) |
| K- H | 0 / 1161 | 0.26 (1) |

LICENSED PROFESSIONAL ENGINEER
02/22/19
H. J. G. ALVES
100000024
PROVINCE OF ONTARIO

**DESIGN CRITERIA**

SPECIFIED LOADS:

| | | | | |
|---|---|---|---|---|
| TOP CH. | LL | = | 20.9 | PSF |
| | DL | = | 6.0 | PSF |
| BOT CH. | LL | = | 10.5 | PSF |
| | DL | = | 7.4 | PSF |
| TOTAL LOAD | | = | 44.8 | PSF |

**SPACING = 24.0 IN. C/C**

THIS TRUSS IS DESIGNED FOR RESIDENTIAL OR SMALL BUILDING REQUIREMENTS OF PART 9, NBCC 2010, NBCC 2015

THIS DESIGN COMPLIES WITH:
- PART 9 OF BCBC 2018 , OBC 2012
- CSA 086-09, CSA 086-14
- TPIC 2011, TPIC 2014

(60 % OF 20.9 P.S.F. G.S.L. PLUS 8.4 P.S.F. RAIN LOAD) EQUALS 20.9 P.S.F. SPECIFIED ROOF LIVE LOAD

ALLOWABLE DEFL.(LL)= L/360 (0.93")
CALCULATED VERT. DEFL.(LL) = L/ 999 (0.09")
ALLOWABLE DEFL.(TL)= L/360 (0.93")
CALCULATED VERT. DEFL.(TL) = L/ 999 (0.16")

CSI: TC=0.50/1.00 (B-C:1) , BC=0.56/1.00 (N-O:2) , WB=0.61/1.00 (E-L:1) , SSI=0.21/1.00 (B-C:1)

DOL LUMBER=1.00 NAIL=1.00 LS BEND=1.10 COMP=1.10 SHEAR=1.10 TENS= 1.10

COMPANION LIVE LOAD FACTOR = 1.00

TRUSS PLATE MANUFACTURER IS NOT RESPONSIBLE FOR QUALITY CONTROL IN THE TRUSS MANUFACTURING PLANT .

NAIL VALUES

| PLATE | GRIP(DRY) (PSI) MAX | MIN | SHEAR (PLI) MAX | MIN | SECTION (PLI) MAX | MIN |
|---|---|---|---|---|---|---|
| MT20 | 618 | 354 | 1667 | 788 | 1987 | 1656 |

PLATE PLACEMENT TOL. = 0.250 inches

PLATE ROTATION TOL. = 5.0 Deg.

JSI GRIP= 0.89 (L) (INPUT = 0.90 )
JSI METAL= 0.67 (M) (INPUT = 1.00 )

DWG NO. TAM 1904095
STRUCTURAL COMPONENT ONLY

| JOB NAME | TRUSS NAME | QUANTITY | PLY | JOB DESC. | DRWG NO. |
|---|---|---|---|---|---|
| 401458 | T17X | 1 | 1 | CONDO BLOCK 1UNITS 1- 3 | |
| | | | | TRUSS DESC. | |

Tamarack Roof Truss, Burlington

Version 8.230 S Nov 17 2018 MiTek Industries, Inc. Fri Feb 22 07:52:04 2019 Page 1

ID:_YsKd95knv21l1np5yhk1ZySw5f-fJVx1rSNVJzvYQwSSGWezL49t97HGanyfLbMlxzifo9

Scale = 1:60.1

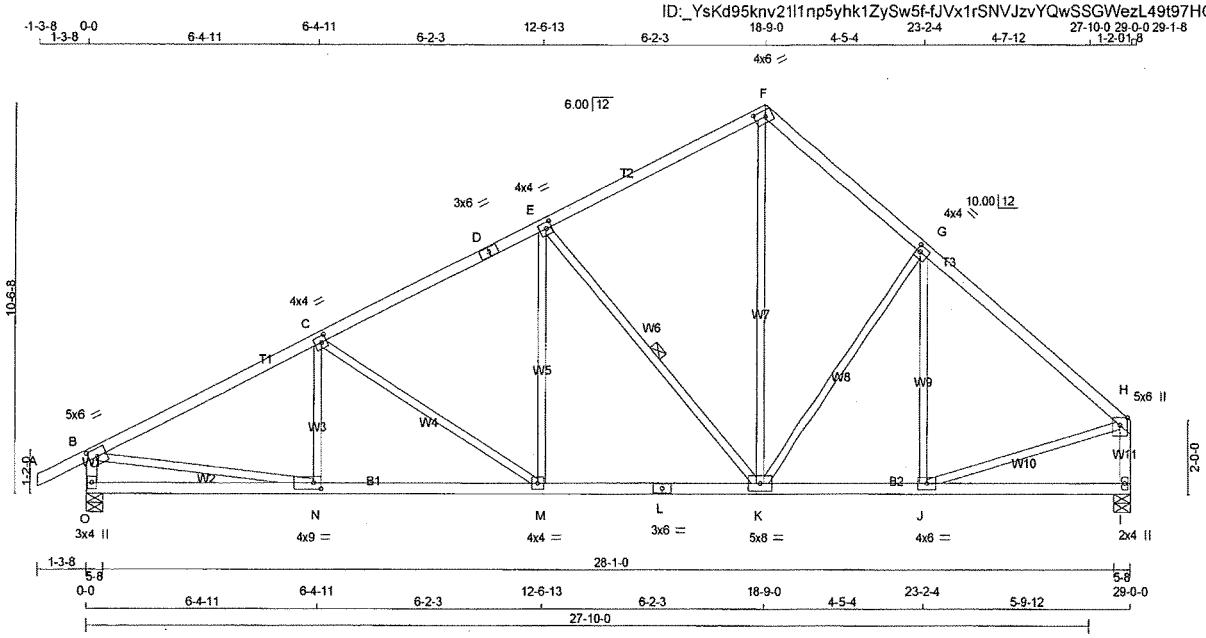


TOTAL WEIGHT = 128 lb

[M][F]

**LUMBER**

N. L. G. A. RULES

| CHORDS | SIZE | | LUMBER | DESCR. |
|---|---|---|---|---|
| A - D | 2x4 | DRY | No.2 | SPF |
| D - F | 2x4 | DRY | No.2 | SPF |
| F - H | 2x4 | DRY | No.2 | SPF |
| O - B | 2x4 | DRY | No.2 | SPF |
| O - L | 2x4 | DRY | No.2 | SPF |
| L - I | 2x4 | DRY | No.2 | SPF |
| ALL WEBS | 2x3 | DRY | No.2 | SPF |
| EXCEPT | | | | |
| I - H | 2x4 | DRY | No.2 | SPF |

DRY: SEASONED LUMBER.

**PLATES (table is in inches)**

| JT | TYPE | PLATES | W | LEN | Y | X |
|---|---|---|---|---|---|---|
| B | TMVW-t | MT20 | 5.0 | 6.0 | 2.50 | 2.75 |
| C | TMWW-t | MT20 | 4.0 | 4.0 | 2.00 | 1.75 |
| D | TS-t | MT20 | 3.0 | 6.0 | | |
| E | TMWW-t | MT20 | 4.0 | 4.0 | 2.00 | 1.75 |
| F | TTW-l | MT20 | 4.0 | 6.0 | 2.00 | 3.50 |
| G | TMWW-t | MT20 | 4.0 | 4.0 | 2.00 | 1.25 |
| H | TMWW+w | MT20 | 5.0 | 6.0 | Edge | |
| I | BMW1+w | MT20 | 2.0 | 4.0 | | |
| J | BMWW-t | MT20 | 4.0 | 6.0 | | |
| K | BMWWW-t | MT20 | 5.0 | 8.0 | | |
| L | BS-t | MT20 | 3.0 | 6.0 | | |
| M | BMWW-t | MT20 | 4.0 | 4.0 | | |
| N | BMWW-t | MT20 | 4.0 | 9.0 | 2.00 | 2.50 |
| O | BMV1+p | MT20 | 3.0 | 4.0 | | |

Edge - INDICATES REFERENCE CORNER OF PLATE TOUCHES EDGE OF CHORD.

**DIMENSIONS, SUPPORTS AND LOADINGS SPECIFIED BY FABRICATOR TO BE VERIFIED BY BUILDING DESIGNER**

**BEARINGS**

| JT | FACTORED GROSS REACTION VERT | HORZ | MAXIMUM FACTORED GROSS REACTION DOWN | HORZ | UPLIFT | INPUT BRG IN-SX | REQRD BRG IN-SX |
|---|---|---|---|---|---|---|---|
| O | 1796 | 0 | 1796 | 0 | 0 | 5-8 | 5-8 |
| I | 1691 | 0 | 1691 | 0 | 0 | 5-8 | 5-8 |

**UNFACTORED REACTIONS**

| JT | 1ST LCASE COMBINED | MAX./MIN. COMPONENT REACTIONS SNOW | LIVE | PERM.LIVE | WIND | DEAD | SOIL |
|---|---|---|---|---|---|---|---|
| O | 1366 | 660 / 0 | 303 / 0 | 0 / 0 | 0 / 0 | 403 / 0 | 0 / 0 |
| I | 1293 | 603 / 0 | 303 / 0 | 0 / 0 | 0 / 0 | 387 / 0 | 0 / 0 |

BEARING MATERIAL TO BE SPF NO.2 OR BETTER AT JOINT(S) O, I

**BRACING**

TOP CHORD TO BE SHEATHED OR MAX. PURLIN SPACING = 3.97 FT.
MAX. UNBRACED BOTTOM CHORD LENGTH = 10.00 FT OR RIGID CEILING DIRECTLY APPLIED.

ALL PITCH BREAKS AND PERIMETER CORNER JOINTS MUST BE LATERALLY RESTRAINED.

1 LATERAL BRACE(S) AT 1/ 2 LENGTH OF E-K.

END VERTICAL(S) MUST BE SHEATHED OR HAVE BRACES AS INDICATED IN THE MAX. UNBRACED LENGTH COLUMN OF THE TABLE BELOW

**LOADING**

TOTAL LOAD CASES: (4)

CHORDS

| MEMB. FR-TO | MAX. FACTORED FORCE (LBS) | FACTORED VERT. LOAD (PLF) FROM | TO | LC1 | MAX CSI (LC) | MAX. UNBRAC LENGTH |
|---|---|---|---|---|---|---|
| A- B | 0 / 24 | -77.7 | -77.7 | 0.10 (1) | 10.00 | |
| B- C | -2419 / 0 | -77.7 | -77.7 | 0.51 (1) | 3.97 | |
| C- D | -1941 / 0 | -77.7 | -77.7 | 0.39 (1) | 4.48 | |
| D- E | -1941 / 0 | -77.7 | -77.7 | 0.39 (1) | 4.48 | |
| E- F | -1254 / 0 | -77.7 | -77.7 | 0.38 (1) | 5.30 | |
| F- G | -1459 / 0 | -77.7 | -77.7 | 0.29 (1) | 5.11 | |
| G- H | -1581 / 0 | -77.7 | -77.7 | 0.35 (1) | 4.91 | |
| O- B | -1692 / 0 | 0.0 | 0.0 | 0.17 (1) | 6.39 | |
| O- N | 0 / 0 | -39.5 | -39.5 | 0.28 (3) | 10.00 | |
| N- M | 0 / 2182 | -39.5 | -39.5 | 0.57 (2) | 10.00 | |
| M- L | 0 / 1736 | -39.5 | -39.5 | 0.46 (2) | 10.00 | |
| L- K | 0 / 1736 | -39.5 | -39.5 | 0.46 (2) | 10.00 | |
| K- J | 0 / 1236 | -39.5 | -39.5 | 0.36 (2) | 10.00 | |
| J- I | 0 / 0 | -39.5 | -39.5 | 0.20 (3) | 10.00 | |

WEBS

| MEMB. FR-TO | MAX. FACTORED FORCE (LBS) | MAX CSI (LC) |
|---|---|---|
| N- C | -18 / 190 | 0.05 (3) |
| C- M | -534 / 0 | 0.58 (1) |
| M- E | 0 / 574 | 0.13 (2) |
| E- K | -975 / 0 | 0.60 (1) |
| K- F | 0 / 1152 | 0.26 (1) |
| K- G | -251 / 0 | 0.33 (1) |
| J- G | -168 / 68 | 0.13 (1) |
| B- N | 0 / 2202 | 0.50 (1) |
| J- H | 0 / 1296 | 0.29 (1) |
| I- H | -1597 / 0 | 0.17 (1) |

**DESIGN CRITERIA**

SPECIFIED LOADS:

| | | | | |
|---|---|---|---|---|
| TOP CH. | LL | = | 20.9 | PSF |
| | DL | = | 6.0 | PSF |
| BOT CH. | LL | = | 10.5 | PSF |
| | DL | = | 7.4 | PSF |
| TOTAL LOAD | | = | 44.8 | PSF |

**SPACING = 24.0 IN. C/C**

THIS TRUSS IS DESIGNED FOR RESIDENTIAL OR SMALL BUILDING REQUIREMENTS OF PART 9, NBCC 2010, NBCC 2015

THIS DESIGN COMPLIES WITH:
- PART 9 OF BCBC 2018 , OBC 2012
- CSA 086-09, CSA 086-14
- TPIC 2011, TPIC 2014

(60 % OF 20.9 P.S.F. G.S.L. PLUS 8.4 P.S.F. RAIN LOAD) EQUALS 20.9 P.S.F. SPECIFIED ROOF LIVE LOAD

ALLOWABLE DEFL.(LL)= L/360 (0.96")
CALCULATED VERT. DEFL.(LL) = L/ 999 (0.10")
ALLOWABLE DEFL.(TL)= L/360 (0.96")
CALCULATED VERT. DEFL.(TL) = L/ 999 (0.17")

CSI: TC=0.51/1.00 (B-C:1) , BC=0.57/1.00 (M-N:2) , WB=0.60/1.00 (E-K:1) , SSI=0.20/1.00 (B-C:1)

DOL LUMBER=1.00 NAIL=1.00 LS BEND=1.10 COMP=1.10 SHEAR=1.10 TENS= 1.10

COMPANION LIVE LOAD FACTOR = 1.00

AUTOSOLVE LEFT HEEL ONLY

TRUSS PLATE MANUFACTURER IS NOT RESPONSIBLE FOR QUALITY CONTROL IN THE TRUSS MANUFACTURING PLANT .

NAIL VALUES

| PLATE | GRIP(DRY) (PSI) MAX | MIN | SHEAR (PLI) MAX | MIN | SECTION (PLI) MAX | MIN |
|---|---|---|---|---|---|---|
| MT20 | 618 | 354 | 1667 | 788 | 1987 | 1656 |

PLATE PLACEMENT TOL. = 0.250 inches

PLATE ROTATION TOL. = 5.0 Deg.

JSI GRIP= 0.88 (B) (INPUT = 0.90 )
JSI METAL= 0.71 (L) (INPUT = 1.00 )

LICENSED PROFESSIONAL ENGINEER
02/22/19
H. J G ALVES
100009020
PROVINCE OF ONTARIO

DWG NO. TAM T19040096
STRUCTURAL
COMPONENT ONLY

| JOB NAME | TRUSS NAME | QUANTITY | PLY | JOB DESC. | DRWG NO. |
|---|---|---|---|---|---|
| 401458 | T18 | 1 | 1 | CONDO BLOCK 1UNITS 1- 3<br>TRUSS DESC. | |

Tamarack Roof Truss, Burlington

Version 8.230 S Nov 17 2018 MiTek Industries, Inc. Fri Feb 22 07:52:05 2019 Page 1

ID:_YsKd95knv21I1np5yhk1ZySw5f-8W3KEAT0Gc5m9aVe0_1tWZdFCZSg?2M5u?KvHNzifo8

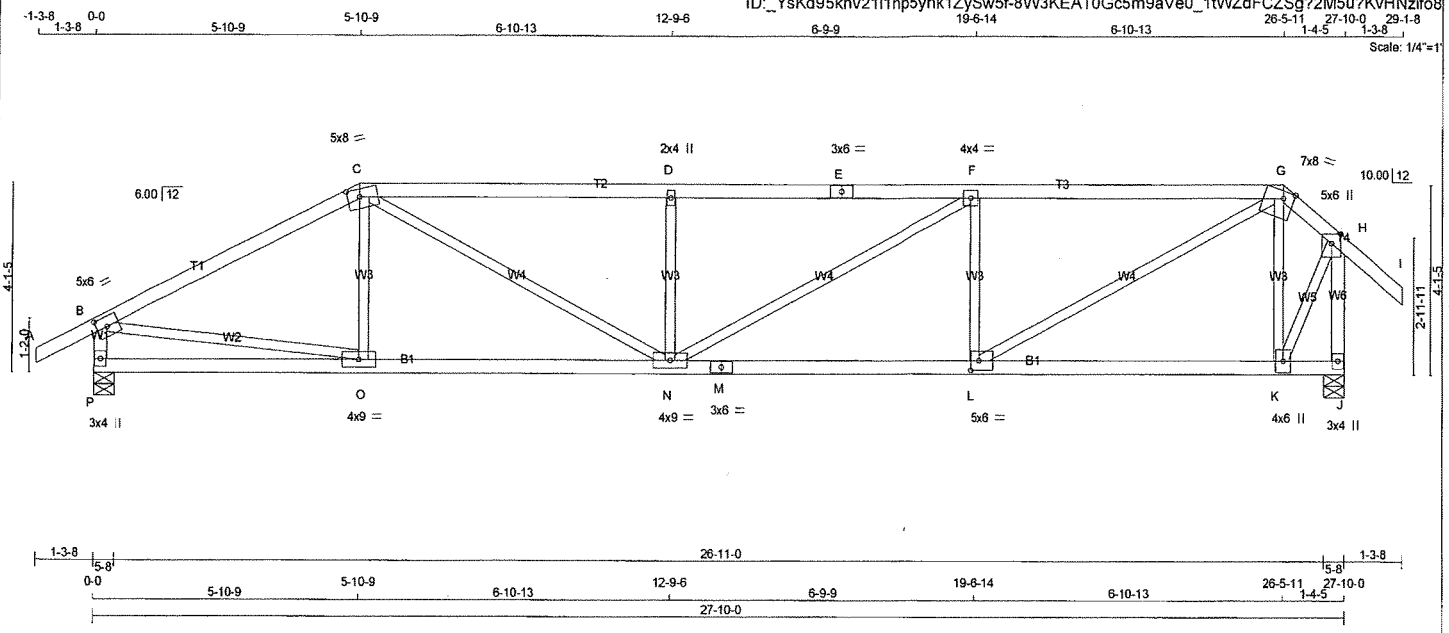


TOTAL WEIGHT = 109 lb

[M]

**LUMBER**

N. L. G. A. RULES

| CHORDS | SIZE | | LUMBER | DESCR. |
|---|---|---|---|---|
| A - C | 2x4 | DRY | No.2 | SPF |
| C - E | 2x4 | DRY | No.2 | SPF |
| E - G | 2x4 | DRY | No.2 | SPF |
| G - I | 2x4 | DRY | No.2 | SPF |
| P - B | 2x4 | DRY | No.2 | SPF |
| J - H | 2x4 | DRY | No.2 | SPF |
| P - M | 2x4 | DRY | No.2 | SPF |
| M - J | 2x4 | DRY | No.2 | SPF |
| ALL WEBS EXCEPT | 2x3 | DRY | No.2 | SPF |

DRY: SEASONED LUMBER.

**PLATES (table is in inches)**

| JT | TYPE | PLATES | W | LEN | Y | X |
|---|---|---|---|---|---|---|
| B | TMVW-t | MT20 | 5.0 | 6.0 | 2.50 | 2.75 |
| C | TTWW-m | MT20 | 5.0 | 8.0 | 2.00 | 3.25 |
| D | TMW+w | MT20 | 2.0 | 4.0 | | |
| E | TS-t | MT20 | 3.0 | 6.0 | | |
| F | TMWW-t | MT20 | 4.0 | 4.0 | | |
| G | TTWW-m | MT20 | 7.0 | 8.0 | Edge | 2.75 |
| H | TMVW+p | MT20 | 5.0 | 6.0 | Edge | |
| J | BMV1+p | MT20 | 3.0 | 4.0 | | |
| K | BMWW+t | MT20 | 4.0 | 6.0 | | |
| L | BMWW-t | MT20 | 5.0 | 6.0 | 2.50 | 2.25 |
| M | BS-t | MT20 | 3.0 | 6.0 | | |
| N | BMWWW-t | MT20 | 4.0 | 9.0 | | |
| O | BMWW-t | MT20 | 4.0 | 9.0 | | |
| P | BMV1+p | MT20 | 3.0 | 4.0 | | |

Edge - INDICATES REFERENCE CORNER OF PLATE TOUCHES EDGE OF CHORD.

**DIMENSIONS, SUPPORTS AND LOADINGS SPECIFIED BY FABRICATOR TO BE VERIFIED BY BUILDING DESIGNER**

**BEARINGS**

| JT | FACTORED GROSS REACTION VERT | HORZ | MAXIMUM FACTORED GROSS REACTION DOWN | HORZ | UPLIFT | INPUT BRG IN-SX | REQRD BRG IN-SX |
|---|---|---|---|---|---|---|---|
| P | 1734 | 0 | 1734 | 0 | 0 | 5-8 | 5-8 |
| J | 1741 | 0 | 1741 | 0 | 0 | 5-8 | 5-8 |

**UNFACTORED REACTIONS**

| JT | 1ST LCASE COMBINED | MAX./MIN. COMPONENT REACTIONS SNOW | LIVE | PERM.LIVE | WIND | DEAD | SOIL |
|---|---|---|---|---|---|---|---|
| P | 1318 | 637 / 0 | 292 / 0 | 0 / 0 | 0 / 0 | 389 / 0 | 0 / 0 |
| J | 1323 | 641 / 0 | 292 / 0 | 0 / 0 | 0 / 0 | 390 / 0 | 0 / 0 |

BEARING MATERIAL TO BE SPF NO.2 OR BETTER AT JOINT(S) P, J

**BRACING**

TOP CHORD TO BE SHEATHED OR MAX. PURLIN SPACING = 3.25 FT.
MAX. UNBRACED BOTTOM CHORD LENGTH = 10.00 FT OR RIGID CEILING DIRECTLY APPLIED.

ALL PITCH BREAKS AND PERIMETER CORNER JOINTS MUST BE LATERALLY RESTRAINED.

**LOADING**

TOTAL LOAD CASES: (4)

CHORDS

| MEMB. FR-TO | MAX. FACTORED FORCE (LBS) | FACTORED VERT. LOAD (PLF) FROM | TO | LC1 CSI (LC) | MAX UNBRAC LENGTH |
|---|---|---|---|---|---|
| A- B | 0 / 24 | -77.7 | -77.7 | 0.10 (1) | 10.00 |
| B- C | -2269 / 0 | -77.7 | -77.7 | 0.66 (1) | 3.86 |
| C- D | -3069 / 0 | -77.7 | -77.7 | 0.86 (1) | 3.27 |
| D- E | -3069 / 0 | -77.7 | -77.7 | 0.86 (1) | 3.25 |
| E- F | -3069 / 0 | -77.7 | -77.7 | 0.86 (1) | 3.25 |
| F- G | -2596 / 0 | -77.7 | -77.7 | 0.77 (1) | 3.57 |
| G- H | -823 / 0 | -77.7 | -77.7 | 0.11 (1) | 6.25 |
| H- I | 0 / 34 | -77.7 | -77.7 | 0.11 (1) | 10.00 |
| P- B | -1642 / 0 | 0.0 | 0.0 | 0.17 (1) | 6.47 |
| J- H | -1806 / 0 | 0.0 | 0.0 | 0.29 (1) | 6.23 |
| P- O | 0 / 0 | -39.5 | -39.5 | 0.29 (3) | 10.00 |
| O- N | 0 / 2028 | -39.5 | -39.5 | 0.57 (2) | 10.00 |
| N- M | 0 / 2596 | -39.5 | -39.5 | 0.63 (2) | 10.00 |
| M- L | 0 / 2596 | -39.5 | -39.5 | 0.63 (2) | 10.00 |
| L- K | 0 / 577 | -39.5 | -39.5 | 0.34 (3) | 10.00 |
| K- J | 0 / 0 | -39.5 | -39.5 | 0.24 (3) | 10.00 |

WEBS

| MEMB. FR-TO | MAX. FACTORED FORCE (LBS) | MAX CSI (LC) |
|---|---|---|
| O- C | -8 / 192 | 0.05 (3) |
| C- N | 0 / 1189 | 0.27 (1) |
| N- D | -577 / 0 | 0.15 (1) |
| N- F | 0 / 542 | 0.12 (1) |
| L- F | -840 / 0 | 0.21 (1) |
| L- G | 0 / 2304 | 0.52 (1) |
| K- G | -825 / 0 | 0.21 (1) |
| B- O | 0 / 2049 | 0.46 (1) |
| K- H | 0 / 1237 | 0.28 (1) |

LICENSED PROFESSIONAL ENGINEER
02/22/19
H. J. G ALVES
100000024
PROVINCE OF ONTARIO

**DESIGN CRITERIA**

SPECIFIED LOADS:

| | | | | |
|---|---|---|---|---|
| TOP CH. | LL | = | 20.9 | PSF |
| | DL | = | 6.0 | PSF |
| BOT CH. | LL | = | 10.5 | PSF |
| | DL | = | 7.4 | PSF |
| TOTAL LOAD | | = | 44.8 | PSF |

**SPACING = 24.0 IN. C/C**

LOADING IN FLAT SECTION BASED ON A SLOPE OF 2.00/12 MINIMUM

THIS TRUSS IS DESIGNED FOR RESIDENTIAL OR SMALL BUILDING REQUIREMENTS OF PART 9, NBCC 2010, NBCC 2015

THIS DESIGN COMPLIES WITH:
- PART 9 OF BCBC 2018 , OBC 2012
- CSA 086-09, CSA 086-14
- TPIC 2011, TPIC 2014

DESIGN ASSUMPTIONS
-OVERHANG NOT TO BE ALTERED OR CUT OFF.

(60 % OF 20.9 P.S.F. G.S.L. PLUS 8.4 P.S.F. RAIN LOAD) EQUALS 20.9 P.S.F. SPECIFIED ROOF LIVE LOAD

ALLOWABLE DEFL.(LL)= L/360 (0.93")
CALCULATED VERT. DEFL.(LL) = L/ 999 (0.17")
ALLOWABLE DEFL.(TL)= L/360 (0.93")
CALCULATED VERT. DEFL.(TL) = L/ 999 (0.30")

CSI: TC=0.86/1.00 (C-D:1) , BC=0.63/1.00 (L-N:2) , WB=0.52/1.00 (G-L:1) , SSI=0.25/1.00 (F-G:1)

DOL LUMBER=1.00 NAIL=1.00 LS BEND=1.10 COMP=1.10 SHEAR=1.10 TENS= 1.10

COMPANION LIVE LOAD FACTOR = 1.00

TRUSS PLATE MANUFACTURER IS NOT RESPONSIBLE FOR QUALITY CONTROL IN THE TRUSS MANUFACTURING PLANT .

NAIL VALUES

| PLATE | GRIP(DRY) (PSI) MAX | MIN | SHEAR (PLI) MAX | MIN | SECTION (PLI) MAX | MIN |
|---|---|---|---|---|---|---|
| MT20 | 618 | 354 | 1667 | 788 | 1987 | 1656 |

PLATE PLACEMENT TOL. = 0.250 inches

PLATE ROTATION TOL. = 5.0 Deg.

JSI GRIP= 0.85 (L) (INPUT = 0.90 )
JSI METAL= 0.74 (M) (INPUT = 1.00 )

DWG NO. TAM 1904097
STRUCTURAL
COMPONENT ONLY

| JOB NAME | TRUSS NAME | QUANTITY | PLY | JOB DESC. CONDO BLOCK 1UNITS 1- 3 | DRWG NO. |
|---|---|---|---|---|---|
| 401458 | T19 | 1 | 1 | TRUSS DESC. | |

Tamarack Roof Truss, Burlington

Version 8.230 S Nov 17 2018 MiTek Industries, Inc. Fri Feb 22 07:52:06 2019 Page 1

ID:_YsKd95knv21l1np5yhk1ZySw5f-cidiSWTe1wDdnk4qahY63mAXszrzkWKE7f4Sqpzifo7

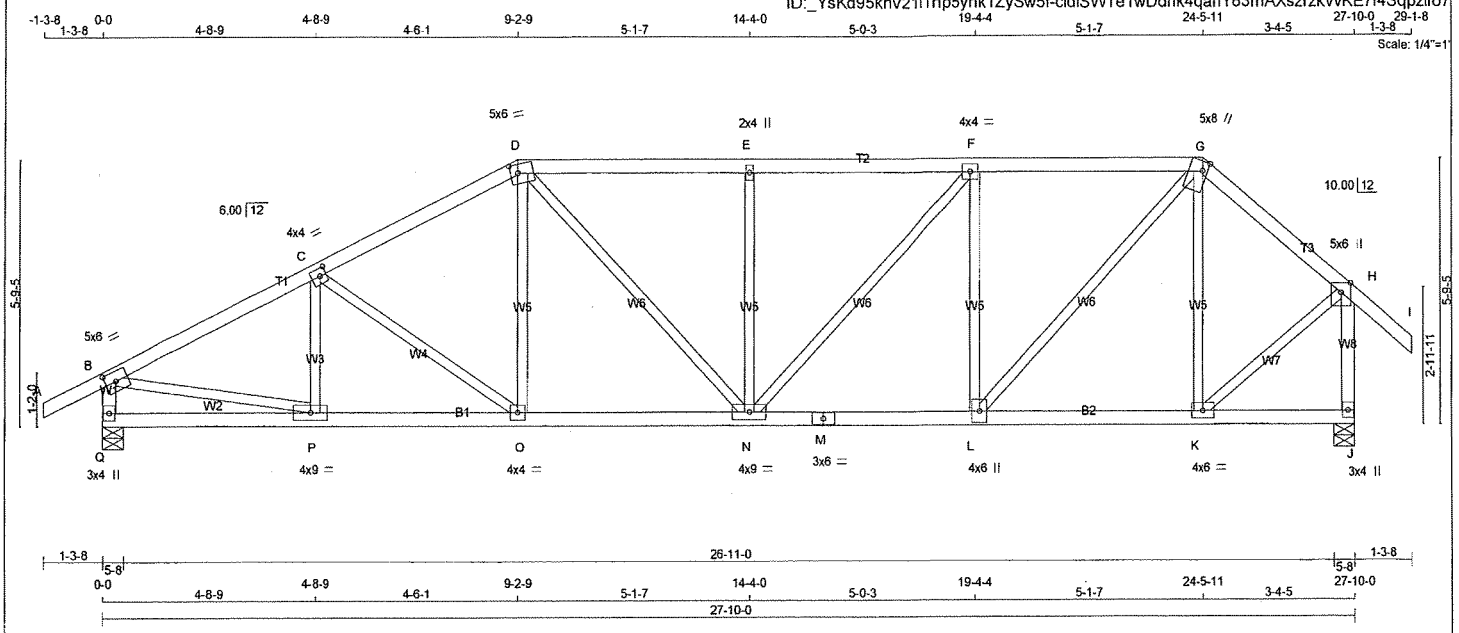





TOTAL WEIGHT = 121 lb

[M]

**LUMBER**

N. L. G. A. RULES

| CHORDS | SIZE | | LUMBER | DESCR. |
|---|---|---|---|---|
| A - D | 2x4 | DRY | No.2 | SPF |
| D - G | 2x4 | DRY | No.2 | SPF |
| G - I | 2x4 | DRY | No.2 | SPF |
| Q - B | 2x4 | DRY | No.2 | SPF |
| J - H | 2x4 | DRY | No.2 | SPF |
| Q - M | 2x4 | DRY | No.2 | SPF |
| M - J | 2x4 | DRY | No.2 | SPF |
| ALL WEBS EXCEPT | 2x3 | DRY | No.2 | SPF |

DRY: SEASONED LUMBER.

**PLATES (table is in inches)**

| JT | TYPE | PLATES | W | LEN | Y | X |
|---|---|---|---|---|---|---|
| B | TMVW-t | MT20 | 5.0 | 6.0 | 2.50 | 2.75 |
| C | TMWW-t | MT20 | 4.0 | 4.0 | 2.00 | 1.75 |
| D | TTWW-m | MT20 | 5.0 | 6.0 | 2.25 | 2.00 |
| E | TMW+w | MT20 | 2.0 | 4.0 | | |
| F | TMWW-t | MT20 | 4.0 | 4.0 | | |
| G | TTWW+m | MT20 | 5.0 | 8.0 | Edge | 1.25 |
| H | TMVW+p | MT20 | 5.0 | 6.0 | Edge | |
| J | BMV1+p | MT20 | 3.0 | 4.0 | | |
| K | BMWW-t | MT20 | 4.0 | 6.0 | | |
| L | BMWW+t | MT20 | 4.0 | 6.0 | | |
| M | BS-t | MT20 | 3.0 | 6.0 | | |
| N | BMWWW-t | MT20 | 4.0 | 9.0 | | |
| O | BMWW-t | MT20 | 4.0 | 4.0 | | |
| P | BMWW-t | MT20 | 4.0 | 9.0 | | |
| Q | BMV1+p | MT20 | 3.0 | 4.0 | | |

Edge - INDICATES REFERENCE CORNER OF PLATE TOUCHES EDGE OF CHORD.

**DIMENSIONS, SUPPORTS AND LOADINGS SPECIFIED BY FABRICATOR TO BE VERIFIED BY BUILDING DESIGNER**

**BEARINGS**

| JT | FACTORED GROSS REACTION VERT | HORZ | MAXIMUM FACTORED GROSS REACTION DOWN | HORZ | UPLIFT | INPUT BRG IN-SX | REQRD BRG IN-SX |
|---|---|---|---|---|---|---|---|
| Q | 1736 | 0 | 1736 | 0 | 0 | 5-8 | 5-8 |
| J | 1739 | 0 | 1739 | 0 | 0 | 5-8 | 5-8 |

**UNFACTORED REACTIONS**

| JT | 1ST LCASE COMBINED | MAX./MIN. COMPONENT REACTIONS SNOW | LIVE | PERM.LIVE | WIND | DEAD | SOIL |
|---|---|---|---|---|---|---|---|
| Q | 1320 | 638 / 0 | 292 / 0 | 0 / 0 | 0 / 0 | 389 / 0 | 0 / 0 |
| J | 1321 | 640 / 0 | 292 / 0 | 0 / 0 | 0 / 0 | 390 / 0 | 0 / 0 |

BEARING MATERIAL TO BE SPF NO.2 OR BETTER AT JOINT(S) Q, J

**BRACING**

TOP CHORD TO BE SHEATHED OR MAX. PURLIN SPACING = 4.20 FT.
MAX. UNBRACED BOTTOM CHORD LENGTH = 10.00 FT OR RIGID CEILING DIRECTLY APPLIED.

ALL PITCH BREAKS AND PERIMETER CORNER JOINTS MUST BE LATERALLY RESTRAINED.

**LOADING**

TOTAL LOAD CASES: (4)

CHORDS

| MEMB. FR-TO | MAX. FACTORED FORCE (LBS) | FACTORED VERT. LOAD LC1 (PLF) FROM | TO | MAX CSI (LC) | MAX. UNBRAC LENGTH |
|---|---|---|---|---|---|
| A- B | 0 / 24 | -77.7 | -77.7 | 0.10 (1) | 10.00 |
| B- C | -2288 / 0 | -77.7 | -77.7 | 0.35 (1) | 4.20 |
| C- D | -2083 / 0 | -77.7 | -77.7 | 0.33 (1) | 4.38 |
| D- E | -2116 / 0 | -77.7 | -77.7 | 0.35 (1) | 4.33 |
| E- F | -2116 / 0 | -77.7 | -77.7 | 0.35 (1) | 4.33 |
| F- G | -1803 / 0 | -77.7 | -77.7 | 0.33 (1) | 4.64 |
| G- H | -1186 / 0 | -77.7 | -77.7 | 0.17 (1) | 5.67 |
| H- I | 0 / 34 | -77.7 | -77.7 | 0.11 (1) | 10.00 |
| Q- B | -1656 / 0 | 0.0 | 0.0 | 0.17 (1) | 6.44 |
| J- H | -1692 / 0 | 0.0 | 0.0 | 0.27 (1) | 6.39 |
| Q- P | 0 / 0 | -39.5 | -39.5 | 0.14 (3) | 10.00 |
| P- O | 0 / 2061 | -39.5 | -39.5 | 0.43 (1) | 10.00 |
| O- N | 0 / 1852 | -39.5 | -39.5 | 0.40 (2) | 10.00 |
| N- M | 0 / 1803 | -39.5 | -39.5 | 0.40 (2) | 10.00 |
| M- L | 0 / 1803 | -39.5 | -39.5 | 0.40 (2) | 10.00 |
| L- K | 0 / 898 | -39.5 | -39.5 | 0.27 (2) | 10.00 |
| K- J | 0 / 0 | -39.5 | -39.5 | 0.13 (3) | 10.00 |

WEBS

| MEMB. FR-TO | MAX. FACTORED FORCE (LBS) | MAX CSI (LC) |
|---|---|---|
| P- C | -181 / 47 | 0.04 (1) |
| C- O | -263 / 0 | 0.14 (1) |
| O- D | 0 / 374 | 0.08 (2) |
| K- G | -502 / 0 | 0.26 (1) |
| B- P | 0 / 2095 | 0.47 (1) |
| K- H | 0 / 1141 | 0.26 (1) |
| L- G | 0 / 1323 | 0.30 (1) |
| D- N | 0 / 385 | 0.09 (1) |
| L- F | -766 / 0 | 0.39 (1) |
| N- E | -426 / 0 | 0.22 (1) |
| N- F | 0 / 463 | 0.10 (1) |

**DESIGN CRITERIA**

SPECIFIED LOADS:

| | | | | |
|---|---|---|---|---|
| TOP CH. | LL | = | 20.9 | PSF |
| | DL | = | 6.0 | PSF |
| BOT CH. | LL | = | 10.5 | PSF |
| | DL | = | 7.4 | PSF |
| TOTAL LOAD | | = | 44.8 | PSF |

**SPACING = 24.0 IN. C/C**

LOADING IN FLAT SECTION BASED ON A SLOPE OF 2.00/12 MINIMUM

THIS TRUSS IS DESIGNED FOR RESIDENTIAL OR SMALL BUILDING REQUIREMENTS OF PART 9, NBCC 2010, NBCC 2015

THIS DESIGN COMPLIES WITH:
- PART 9 OF BCBC 2018 , OBC 2012
- CSA 086-09, CSA 086-14
- TPIC 2011, TPIC 2014

(60 % OF 20.9 P.S.F. G.S.L. PLUS 8.4 P.S.F. RAIN LOAD) EQUALS 20.9 P.S.F. SPECIFIED ROOF LIVE LOAD

ALLOWABLE DEFL.(LL)= L/360 (0.93")
CALCULATED VERT. DEFL.(LL) = L/ 999 (0.09")
ALLOWABLE DEFL.(TL)= L/360 (0.93")
CALCULATED VERT. DEFL.(TL) = L/ 999 (0.16")

CSI: TC=0.35/1.00 (B-C:1) , BC=0.43/1.00 (O-P:1) , WB=0.47/1.00 (B-P:1) , SSI=0.18/1.00 (F-G:1)

DOL LUMBER=1.00 NAIL=1.00 LS BEND=1.10 COMP=1.10 SHEAR=1.10 TENS= 1.10

COMPANION LIVE LOAD FACTOR = 1.00

TRUSS PLATE MANUFACTURER IS NOT RESPONSIBLE FOR QUALITY CONTROL IN THE TRUSS MANUFACTURING PLANT .

NAIL VALUES

| PLATE | GRIP(DRY) (PSI) MAX | MIN | SHEAR (PLI) MAX | MIN | SECTION (PLI) MAX | MIN |
|---|---|---|---|---|---|---|
| MT20 | 618 | 354 | 1667 | 788 | 1987 | 1656 |

PLATE PLACEMENT TOL. = 0.250 inches

PLATE ROTATION TOL. = 5.0 Deg.

TPI GRIP= 0.88 (L) (INPUT = 0.90 )
TPI METAL= 0.60 (B) (INPUT = 1.00 )

LICENSED PROFESSIONAL ENGINEER
02/22/19
H. G. ALVES
100009024
PROVINCE OF ONTARIO

DWG NO. TAM T1904098
STRUCTURAL COMPONENT ONLY

| JOB NAME | TRUSS NAME | QUANTITY | PLY | JOB DESC. CONDO BLOCK 1UNITS 1- 3 | DRWG NO. |
|---|---|---|---|---|---|
| 401458 | T20 | 3 | 1 | TRUSS DESC. | |

Tamarack Roof Truss, Burlington

Version 8.230 S Nov 17 2018 MiTek Industries, Inc. Fri Feb 22 07:52:07 2019 Page 1

ID:_YsKd95knv21l1np5yhk1ZySw5f-4uA4fsUGoELUPuf08O3Lb_ijVNAXTmOLJp0MFzifo6

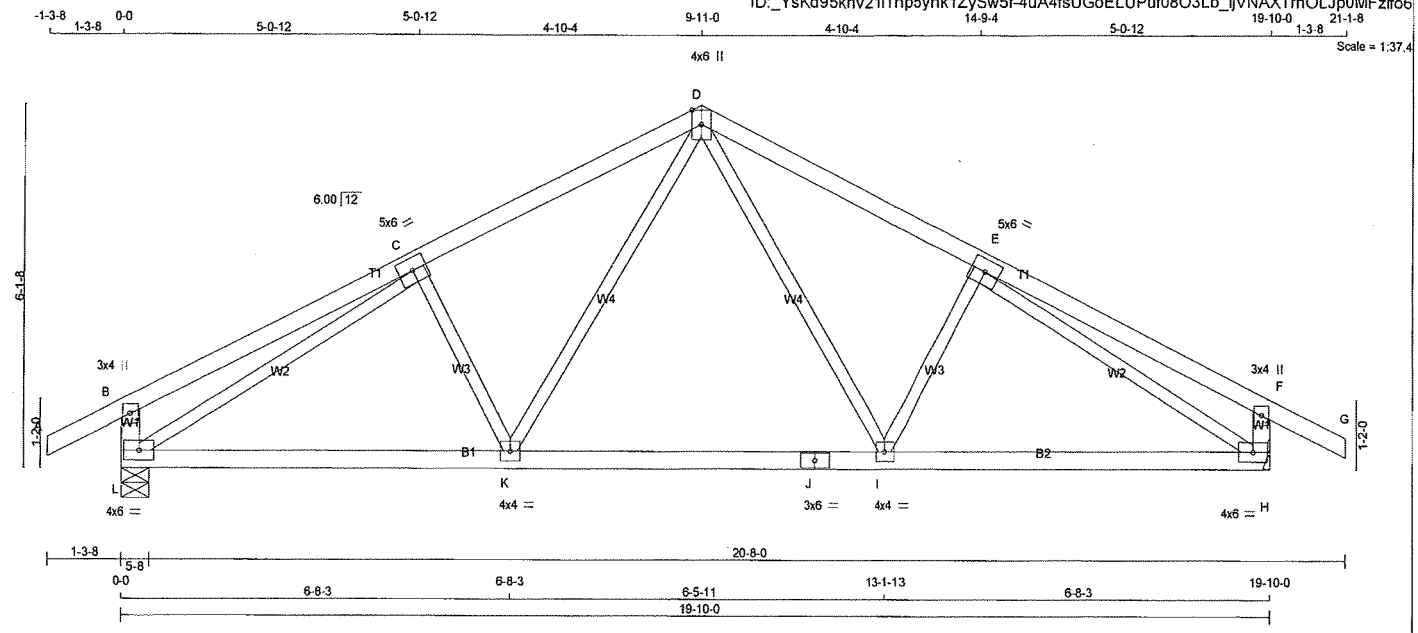


TOTAL WEIGHT = 3 X 78 = 235 lb

[M][F]

**LUMBER**

N. L. G. A. RULES

| CHORDS | SIZE | | LUMBER | DESCR. |
|---|---|---|---|---|
| A - D | 2x4 | DRY | No.2 | SPF |
| D - G | 2x4 | DRY | No.2 | SPF |
| L - B | 2x4 | DRY | No.2 | SPF |
| H - F | 2x4 | DRY | No.2 | SPF |
| L - J | 2x4 | DRY | No.2 | SPF |
| J - H | 2x4 | DRY | No.2 | SPF |
| ALL WEBS EXCEPT | 2x3 | DRY | No.2 | SPF |

DRY: SEASONED LUMBER.

**PLATES (table is in inches)**

| JT | TYPE | PLATES | W | LEN | Y | X |
|---|---|---|---|---|---|---|
| B | TMV+p | MT20 | 3.0 | 4.0 | | |
| C | TMWW-t | MT20 | 5.0 | 6.0 | | |
| D | TTWW+p | MT20 | 4.0 | 6.0 | Edge | |
| E | TMWW-t | MT20 | 5.0 | 6.0 | | |
| F | TMV+p | MT20 | 3.0 | 4.0 | | |
| H | BMVW1-t | MT20 | 4.0 | 6.0 | | |
| I | BMWW-t | MT20 | 4.0 | 4.0 | | |
| J | BS-t | MT20 | 3.0 | 6.0 | | |
| K | BMWW-t | MT20 | 4.0 | 4.0 | | |
| L | BMVW1-t | MT20 | 4.0 | 6.0 | | |

Edge - INDICATES REFERENCE CORNER OF PLATE TOUCHES EDGE OF CHORD.

**DIMENSIONS, SUPPORTS AND LOADINGS SPECIFIED BY FABRICATOR TO BE VERIFIED BY BUILDING DESIGNER**

**BEARINGS**

| JT | FACTORED GROSS REACTION VERT | HORZ | MAXIMUM FACTORED GROSS REACTION DOWN | HORZ | UPLIFT | INPUT BRG IN-SX | REQRD BRG IN-SX |
|---|---|---|---|---|---|---|---|
| L | 1268 | 0 | 1268 | 0 | 0 | 5-8 | 5-8 |
| H | 1268 | 0 | 1268 | 0 | 0 | MECHANICAL | |

A SUITABLE HANGER/MECHANICAL CONNECTION IS REQUIRED AT JOINT H. MINIMUM BEARING LENGTH AT JOINT H = 1-8.

**UNFACTORED REACTIONS**

| JT | 1ST LCASE COMBINED | MAX./MIN. COMPONENT REACTIONS SNOW | LIVE | PERM.LIVE | WIND | DEAD | SOIL |
|---|---|---|---|---|---|---|---|
| L | 962 | 471 / 0 | 208 / 0 | 0 / 0 | 0 / 0 | 282 / 0 | 0 / 0 |
| H | 962 | 471 / 0 | 208 / 0 | 0 / 0 | 0 / 0 | 282 / 0 | 0 / 0 |

BEARING MATERIAL TO BE SPF NO.2 OR BETTER AT JOINT(S) L

**BRACING**

TOP CHORD TO BE SHEATHED OR MAX. PURLIN SPACING = 5.22 FT.
MAX. UNBRACED BOTTOM CHORD LENGTH = 10.00 FT OR RIGID CEILING DIRECTLY APPLIED.

ALL PITCH BREAKS AND PERIMETER CORNER JOINTS MUST BE LATERALLY RESTRAINED.

**LOADING**

TOTAL LOAD CASES: (4)

CHORDS

| MEMB. FR-TO | MAX. FACTORED FORCE (LBS) | FACTORED VERT. LOAD LC1 (PLF) FROM | TO | MAX CSI (LC) | MAX. UNBRAC LENGTH |
|---|---|---|---|---|---|
| A- B | 0 / 24 | -77.7 | -77.7 | 0.10 (1) | 10.00 |
| B- C | 0 / 20 | -77.7 | -77.7 | 0.30 (1) | 10.00 |
| C- D | -1413 / 0 | -77.7 | -77.7 | 0.26 (1) | 5.22 |
| D- E | -1413 / 0 | -77.7 | -77.7 | 0.26 (1) | 5.22 |
| E- F | 0 / 20 | -77.7 | -77.7 | 0.30 (1) | 10.00 |
| F- G | 0 / 24 | -77.7 | -77.7 | 0.10 (1) | 10.00 |
| L- B | -254 / 0 | 0.0 | 0.0 | 0.03 (1) | 7.81 |
| H- F | -254 / 0 | 0.0 | 0.0 | 0.03 (1) | 7.81 |
| L- K | 0 / 1345 | -39.5 | -39.5 | 0.48 (2) | 10.00 |
| K- J | 0 / 983 | -39.5 | -39.5 | 0.42 (2) | 10.00 |
| J- I | 0 / 983 | -39.5 | -39.5 | 0.42 (2) | 10.00 |
| I- H | 0 / 1345 | -39.5 | -39.5 | 0.48 (2) | 10.00 |

WEBS

| MEMB. FR-TO | MAX. FACTORED FORCE (LBS) | MAX CSI (LC) |
|---|---|---|
| D- I | 0 / 543 | 0.12 (1) |
| I- E | -215 / 31 | 0.05 (1) |
| K- D | 0 / 543 | 0.12 (1) |
| C- K | -215 / 31 | 0.05 (1) |
| L- C | -1621 / 0 | 0.97 (1) |
| E- H | -1621 / 0 | 0.97 (1) |

LICENSED PROFESSIONAL ENGINEER
02/22/19
H J G ALVES
100009024
PROVINCE OF ONTARIO

**DESIGN CRITERIA**

SPECIFIED LOADS:

| | | | | |
|---|---|---|---|---|
| TOP CH. | LL | = | 20.9 | PSF |
| | DL | = | 6.0 | PSF |
| BOT CH. | LL | = | 10.5 | PSF |
| | DL | = | 7.4 | PSF |
| TOTAL LOAD | | = | 44.8 | PSF |

**SPACING = 24.0 IN. C/C**

THIS TRUSS IS DESIGNED FOR RESIDENTIAL OR SMALL BUILDING REQUIREMENTS OF PART 9, NBCC 2010, NBCC 2015

THIS DESIGN COMPLIES WITH:
- PART 9 OF BCBC 2018 , OBC 2012
- CSA 086-09, CSA 086-14
- TPIC 2011, TPIC 2014

(60 % OF 20.9 P.S.F. G.S.L. PLUS 8.4 P.S.F. RAIN LOAD) EQUALS 20.9 P.S.F. SPECIFIED ROOF LIVE LOAD

ALLOWABLE DEFL.(LL)= L/360 (0.66")
CALCULATED VERT. DEFL.(LL) = L/ 999 (0.09")
ALLOWABLE DEFL.(TL)= L/360 (0.66")
CALCULATED VERT. DEFL.(TL) = L/ 999 (0.15")

CSI: TC=0.30/1.00 (E-F:1) , BC=0.48/1.00 (K-L:2) , WB=0.97/1.00 (C-L:1) , SSI=0.17/1.00 (K-L:3)

DOL LUMBER=1.00 NAIL=1.00 LS BEND=1.10 COMP=1.10 SHEAR=1.10 TENS= 1.10

COMPANION LIVE LOAD FACTOR = 1.00

TRUSS PLATE MANUFACTURER IS NOT RESPONSIBLE FOR QUALITY CONTROL IN THE TRUSS MANUFACTURING PLANT .

NAIL VALUES

| PLATE | GRIP(DRY) (PSI) MAX | MIN | SHEAR (PLI) MAX | MIN | SECTION (PLI) MAX | MIN |
|---|---|---|---|---|---|---|
| MT20 | 618 | 354 | 1667 | 788 | 1987 | 1656 |

PLATE PLACEMENT TOL. = 0.250 inches

PLATE ROTATION TOL. = 5.0 Deg.

JSI GRIP= 0.85 (H) (INPUT = 0.90 )
JSI METAL= 0.40 (E) (INPUT = 1.00 )

DWG NO. TAM 179041099
STRUCTURAL
COMPONENT ONLY

| JOB NAME | TRUSS NAME | QUANTITY | PLY | JOB DESC. | DRWG NO. |
|---|---|---|---|---|---|
| 401458 | G20 | 2 | 1 | CONDO BLOCK 1UNITS 1- 3<br>TRUSS DESC. | |

Tamarack Roof Truss, Burlington

Version 8.230 S Nov 17 2018 MiTek Industries, Inc. Fri Feb 22 07:51:38 2019 Page 1
ID:_YsKd95knv21I1np5yhk1ZySw5f-QJw6ay84dJibQRxSxp2Ywsl0ptgNlAy87hIl_qRzifoZ

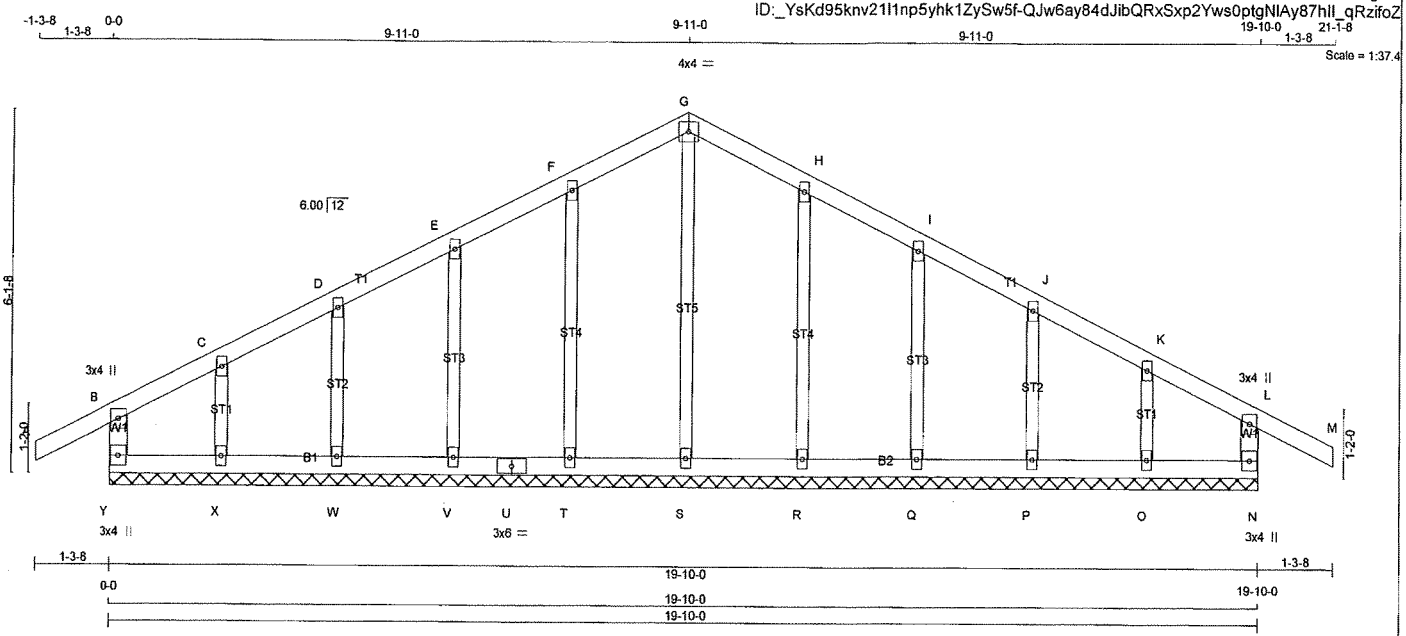


TOTAL WEIGHT = 2 X 78 = 155 lb
[M]

**LUMBER**
N. L. G. A. RULES

| CHORDS | SIZE | | LUMBER | DESCR. |
|---|---|---|---|---|
| Y - B | 2x4 | DRY | No.2 | SPF |
| A - G | 2x4 | DRY | No.2 | SPF |
| G - M | 2x4 | DRY | No.2 | SPF |
| N - L | 2x4 | DRY | No.2 | SPF |
| Y - U | 2x4 | DRY | No.2 | SPF |
| U - N | 2x4 | DRY | No.2 | SPF |
| ALL WEBS | 2x3 | DRY | No.2 | SPF |
| ALL GABLE WEBS | 2x3 | DRY | No.2 | SPF |

DRY: SEASONED LUMBER.

GABLE STUDS SPACED AT 2-0-0 OC.

**PLATES (table is in inches)**

| JT | TYPE | PLATES | W | LEN | Y | X |
|---|---|---|---|---|---|---|
| B | TMV+p | MT20 | 3.0 | 4.0 | | |
| C, D, E, F, H, I, J, K | | | | | | |
| C | TMW+w | MT20 | 2.0 | 4.0 | | |
| G | TTW-p | MT20 | 4.0 | 4.0 | | |
| L | TMV+p | MT20 | 3.0 | 4.0 | | |
| N | BMV1+p | MT20 | 3.0 | 4.0 | | |
| O, P, Q, R, S, T, V, W, X | | | | | | |
| O | BMW1+w | MT20 | 2.0 | 4.0 | | |
| U | BS-t | MT20 | 3.0 | 6.0 | | |
| Y | BMV1+p | MT20 | 3.0 | 4.0 | | |

**DIMENSIONS, SUPPORTS AND LOADINGS SPECIFIED BY FABRICATOR TO BE VERIFIED BY BUILDING DESIGNER**

**BEARINGS**

THIS TRUSS DESIGNED FOR CONTINUOUS BEARINGS.

THIS TRUSS REQUIRES RIGID SHEATHING ON EXPOSED FACE.

BEARING MATERIAL TO BE SPF NO.2 OR BETTER AT JOINT(S)

**BRACING**
TOP CHORD TO BE SHEATHED OR MAX. PURLIN SPACING = 10.00 FT.
MAX. UNBRACED BOTTOM CHORD LENGTH = 6.25 FT OR RIGID CEILING DIRECTLY APPLIED.

ALL PITCH BREAKS AND PERIMETER CORNER JOINTS MUST BE LATERALLY RESTRAINED.

**LOADING**
TOTAL LOAD CASES: (4)

CHORDS

| MEMB. FR-TO | MAX. FACTORED FORCE (LBS) | FACTORED VERT. LOAD (PLF) FROM | TO | LC1 | MAX CSI (LC) | MAX. UNBRAC LENGTH |
|---|---|---|---|---|---|---|
| Y- B | -191 / 0 | 0.0 | 0.0 | 0.03 (1) | 7.81 | |
| A- B | 0 / 24 | -77.7 | -77.7 | 0.10 (1) | 10.00 | |
| B- C | -7 / 2 | -77.7 | -77.7 | 0.07 (1) | 10.00 | |
| C- D | -4 / 17 | -77.7 | -77.7 | 0.04 (1) | 10.00 | |
| D- E | -4 / 18 | -77.7 | -77.7 | 0.04 (1) | 10.00 | |
| E- F | -3 / 23 | -77.7 | -77.7 | 0.04 (1) | 10.00 | |
| F- G | -3 / 24 | -77.7 | -77.7 | 0.04 (1) | 10.00 | |
| G- H | -3 / 24 | -77.7 | -77.7 | 0.04 (1) | 10.00 | |
| H- I | -3 / 23 | -77.7 | -77.7 | 0.04 (1) | 10.00 | |
| I- J | -4 / 18 | -77.7 | -77.7 | 0.04 (1) | 10.00 | |
| J- K | -4 / 17 | -77.7 | -77.7 | 0.04 (1) | 10.00 | |
| K- L | -7 / 2 | -77.7 | -77.7 | 0.07 (1) | 10.00 | |
| L- M | 0 / 24 | -77.7 | -77.7 | 0.10 (1) | 10.00 | |
| N- L | -191 / 0 | 0.0 | 0.0 | 0.03 (1) | 7.81 | |
| Y- X | -9 / 5 | -39.5 | -39.5 | 0.03 (3) | 10.00 | |
| X- W | -13 / 4 | -39.5 | -39.5 | 0.03 (3) | 6.25 | |
| W- V | -17 / 3 | -39.5 | -39.5 | 0.03 (3) | 6.25 | |
| V- U | -20 / 3 | -39.5 | -39.5 | 0.02 (3) | 6.25 | |
| U- T | -20 / 3 | -39.5 | -39.5 | 0.02 (3) | 6.25 | |
| T- S | -22 / 2 | -39.5 | -39.5 | 0.02 (3) | 6.25 | |
| S- R | -22 / 2 | -39.5 | -39.5 | 0.02 (3) | 6.25 | |
| R- Q | -20 / 3 | -39.5 | -39.5 | 0.02 (3) | 6.25 | |
| Q- P | -17 / 3 | -39.5 | -39.5 | 0.03 (3) | 6.25 | |
| P- O | -13 / 4 | -39.5 | -39.5 | 0.03 (3) | 6.25 | |
| O- N | -9 / 5 | -39.5 | -39.5 | 0.03 (3) | 10.00 | |

WEBS

| MEMB. FR-TO | MAX. FACTORED FORCE (LBS) | MAX CSI (LC) |
|---|---|---|
| S- G | -180 / 0 | 0.10 (1) |
| T- F | -159 / 0 | 0.06 (1) |
| V- E | -151 / 0 | 0.04 (1) |
| W- D | -160 / 0 | 0.03 (1) |
| X- C | -124 / 0 | 0.02 (1) |
| R- H | -159 / 0 | 0.06 (1) |
| Q- I | -151 / 0 | 0.04 (1) |
| P- J | -160 / 0 | 0.03 (1) |
| O- K | -124 / 0 | 0.02 (1) |

**DESIGN CRITERIA**

SPECIFIED LOADS:

| | | | | |
|---|---|---|---|---|
| TOP CH. | LL | = | 20.9 | PSF |
| | DL | = | 6.0 | PSF |
| BOT CH. | LL | = | 10.5 | PSF |
| | DL | = | 7.4 | PSF |
| TOTAL LOAD | | = | 44.8 | PSF |

**SPACING = 24.0 IN. C/C**

THIS TRUSS IS DESIGNED FOR RESIDENTIAL OR SMALL BUILDING REQUIREMENTS OF PART 9, NBCC 2010, NBCC 2015

THIS DESIGN COMPLIES WITH:
- PART 9 OF BCBC 2018 , OBC 2012
- CSA 086-09, CSA 086-14
- TPIC 2011, TPIC 2014

DESIGN ASSUMPTIONS
-OVERHANG NOT TO BE ALTERED OR CUT OFF.

(60 % OF 20.9 P.S.F. G.S.L. PLUS 8.4 P.S.F. RAIN LOAD) EQUALS 20.9 P.S.F. SPECIFIED ROOF LIVE LOAD

CSI: TC=0.10/1.00 (L-M:1) , BC=0.03/1.00 (N-O:3) , WB=0.10/1.00 (G-S:1) , SSI=0.07/1.00 (L-M:1)

DOL LUMBER=1.00 NAIL=1.00 LS BEND=1.10 COMP=1.10 SHEAR=1.10 TENS= 1.10

COMPANION LIVE LOAD FACTOR = 1.00

TRUSS PLATE MANUFACTURER IS NOT RESPONSIBLE FOR QUALITY CONTROL IN THE TRUSS MANUFACTURING PLANT .

NAIL VALUES

| PLATE | GRIP(DRY) (PSI) MAX | MIN | SHEAR (PLI) MAX | MIN | SECTION (PLI) MAX | MIN |
|---|---|---|---|---|---|---|
| MT20 | 618 | 354 | 1667 | 788 | 1987 | 1656 |

PLATE PLACEMENT TOL. = 0.250 inches

PLATE ROTATION TOL. = 5.0 Deg.

JSI GRIP= 0.40 (K) (INPUT = 0.90 )
JSI METAL= 0.07 (D) (INPUT = 1.00 )

LICENSED PROFESSIONAL ENGINEER
02/22/19
H. J. G. ALVES
100089024
PROVINCE OF ONTARIO

DWG NO. TAM 7190400
STRUCTURAL
COMPONENT ONLY

| JOB NAME | TRUSS NAME | QUANTITY | PLY | JOB DESC. CONDO BLOCK 1UNITS 1- 3 | DRWG NO. |
|---|---|---|---|---|---|
| 401458 | T21 | 12 | 1 | TRUSS DESC. | |

Tamarack Roof Truss, Burlington

Version 8.230 S Nov 17 2018 MiTek Industries, Inc. Fri Feb 22 07:52:08 2019 Page 1

ID:_YsKd95knv21I1np5yhk1ZySw5f-Y5kStCVuZXTK12EDh6aa8BFuzmWSCMYXazZZuizifo5

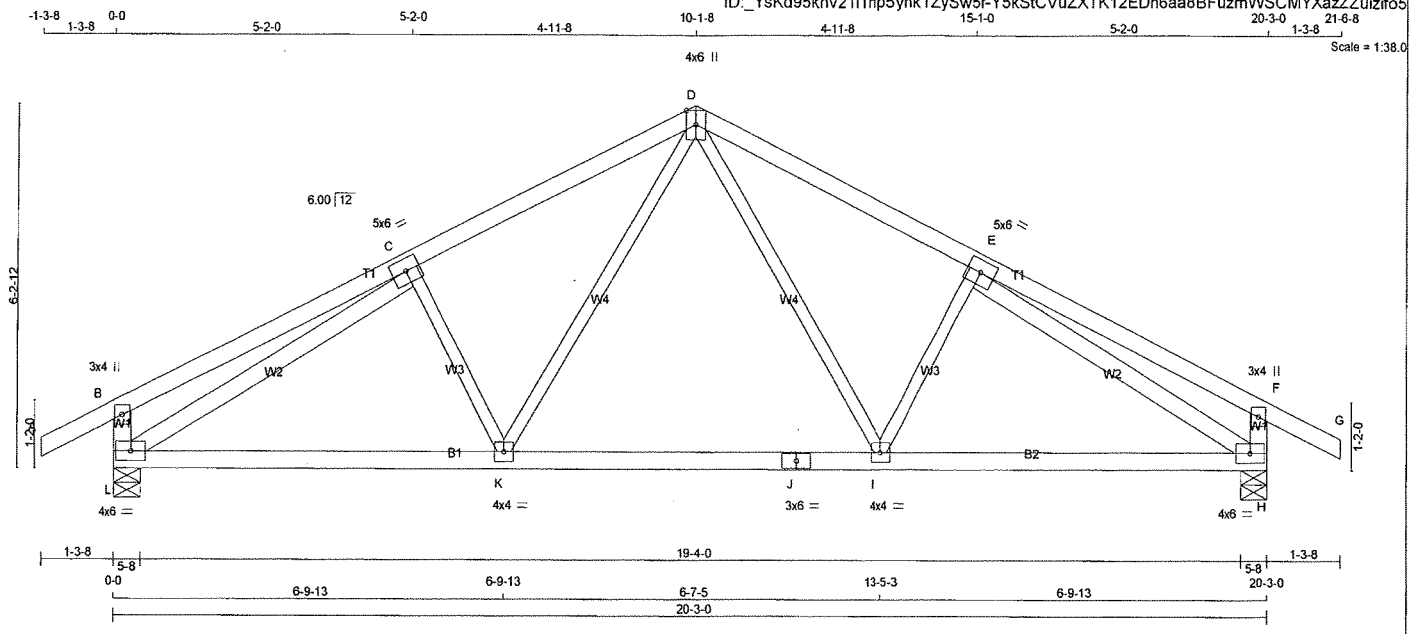


TOTAL WEIGHT = 12 X 83 = 1002 lb

**LUMBER**

N. L. G. A. RULES

| CHORDS | SIZE | | LUMBER | DESCR. |
|---|---|---|---|---|
| A - D | 2x4 | DRY | No.2 | SPF |
| D - G | 2x4 | DRY | No.2 | SPF |
| L - B | 2x4 | DRY | No.2 | SPF |
| H - F | 2x4 | DRY | No.2 | SPF |
| L - J | 2x4 | DRY | No.2 | SPF |
| J - H | 2x4 | DRY | No.2 | SPF |
| ALL WEBS | 2x3 | DRY | No.2 | SPF |
| EXCEPT | | | | |
| L - C | 2x4 | DRY | No.2 | SPF |
| E - H | 2x4 | DRY | No.2 | SPF |

DRY: SEASONED LUMBER.

**PLATES (table is in inches)**

| JT | TYPE | PLATES | W | LEN | Y | X |
|---|---|---|---|---|---|---|
| B | TMV+p | MT20 | 3.0 | 4.0 | | |
| C | TMWW-t | MT20 | 5.0 | 6.0 | | |
| D | TTWW+p | MT20 | 4.0 | 6.0 | Edge | |
| E | TMWW-t | MT20 | 5.0 | 6.0 | | |
| F | TMV+p | MT20 | 3.0 | 4.0 | | |
| H | BMVW1-t | MT20 | 4.0 | 6.0 | | |
| I | BMWW-t | MT20 | 4.0 | 4.0 | | |
| J | BS-t | MT20 | 3.0 | 6.0 | | |
| K | BMWW-t | MT20 | 4.0 | 4.0 | | |
| L | BMVW1-t | MT20 | 4.0 | 6.0 | | |

Edge - INDICATES REFERENCE CORNER OF PLATE TOUCHES EDGE OF CHORD.

**DIMENSIONS, SUPPORTS AND LOADINGS SPECIFIED BY FABRICATOR TO BE VERIFIED BY BUILDING DESIGNER**

**BEARINGS**

| JT | FACTORED GROSS REACTION VERT | HORZ | MAXIMUM FACTORED GROSS REACTION DOWN | HORZ | UPLIFT | INPUT BRG IN-SX | REQRD BRG IN-SX |
|---|---|---|---|---|---|---|---|
| L | 1292 | 0 | 1292 | 0 | 0 | 5-8 | 5-8 |
| H | 1292 | 0 | 1292 | 0 | 0 | 5-8 | 5-8 |

**UNFACTORED REACTIONS**

MAX./MIN. COMPONENT REACTIONS

| JT | 1ST LCASE COMBINED | SNOW | LIVE | PERM.LIVE | WIND | DEAD | SOIL |
|---|---|---|---|---|---|---|---|
| L | 980 | 480 / 0 | 213 / 0 | 0 / 0 | 0 / 0 | 288 / 0 | 0 / 0 |
| H | 980 | 480 / 0 | 213 / 0 | 0 / 0 | 0 / 0 | 288 / 0 | 0 / 0 |

BEARING MATERIAL TO BE SPF NO.2 OR BETTER AT JOINT(S) L, H

**BRACING**

TOP CHORD TO BE SHEATHED OR MAX. PURLIN SPACING = 5.15 FT.
MAX. UNBRACED BOTTOM CHORD LENGTH = 10.00 FT OR RIGID CEILING DIRECTLY APPLIED.

ALL PITCH BREAKS AND PERIMETER CORNER JOINTS MUST BE LATERALLY RESTRAINED.

**LOADING**

TOTAL LOAD CASES: (4)

CHORDS

| MEMB. FR-TO | MAX. FACTORED FORCE (LBS) | FACTORED VERT. LOAD LC1 (PLF) FROM | TO | MAX CSI (LC) | MAX. UNBRAC LENGTH |
|---|---|---|---|---|---|
| A- B | 0 / 24 | -77.7 | -77.7 | 0.10 (1) | 10.00 |
| B- C | 0 / 20 | -77.7 | -77.7 | 0.32 (1) | 10.00 |
| C- D | -1450 / 0 | -77.7 | -77.7 | 0.27 (1) | 5.15 |
| D- E | -1450 / 0 | -77.7 | -77.7 | 0.27 (1) | 5.15 |
| E- F | 0 / 20 | -77.7 | -77.7 | 0.32 (1) | 10.00 |
| F- G | 0 / 24 | -77.7 | -77.7 | 0.10 (1) | 10.00 |
| L- B | -256 / 0 | 0.0 | 0.0 | 0.03 (1) | 7.81 |
| H- F | -256 / 0 | 0.0 | 0.0 | 0.03 (1) | 7.81 |
| L- K | 0 / 1382 | -39.5 | -39.5 | 0.49 (2) | 10.00 |
| K- J | 0 / 1007 | -39.5 | -39.5 | 0.44 (2) | 10.00 |
| J- I | 0 / 1007 | -39.5 | -39.5 | 0.44 (2) | 10.00 |
| I- H | 0 / 1382 | -39.5 | -39.5 | 0.49 (2) | 10.00 |

WEBS

| MEMB. FR-TO | MAX. FACTORED FORCE (LBS) | MAX CSI (LC) |
|---|---|---|
| D- I | 0 / 558 | 0.13 (1) |
| I- E | -223 / 30 | 0.06 (1) |
| K- D | 0 / 558 | 0.13 (1) |
| C- K | -223 / 30 | 0.06 (1) |
| L- C | -1664 / 0 | 0.75 (1) |
| E- H | -1664 / 0 | 0.75 (1) |

LICENSED PROFESSIONAL ENGINEER
H. J. G ALVES
100009054
PROVINCE OF ONTARIO

[M][F]

**DESIGN CRITERIA**

SPECIFIED LOADS:

| | | | | |
|---|---|---|---|---|
| TOP CH. | LL | = | 20.9 | PSF |
| | DL | = | 6.0 | PSF |
| BOT CH. | LL | = | 10.5 | PSF |
| | DL | = | 7.4 | PSF |
| TOTAL LOAD | | = | 44.8 | PSF |

**SPACING = 24.0 IN. C/C**

THIS TRUSS IS DESIGNED FOR RESIDENTIAL OR SMALL BUILDING REQUIREMENTS OF PART 9, NBCC 2010, NBCC 2015

THIS DESIGN COMPLIES WITH:
- PART 9 OF BCBC 2018 , OBC 2012
- CSA 086-09, CSA 086-14
- TPIC 2011, TPIC 2014

(60 % OF 20.9 P.S.F. G.S.L. PLUS 8.4 P.S.F. RAIN LOAD) EQUALS 20.9 P.S.F. SPECIFIED ROOF LIVE LOAD

ALLOWABLE DEFL.(LL)= L/360 (0.68")
CALCULATED VERT. DEFL.(LL) = L/ 999 (0.09")
ALLOWABLE DEFL.(TL)= L/360 (0.68")
CALCULATED VERT. DEFL.(TL) = L/ 999 (0.16")

CSI: TC=0.32/1.00 (B-C:1) , BC=0.49/1.00 (K-L:2) , WB=0.75/1.00 (C-L:1) , SSI=0.17/1.00 (K-L:3)

DOL LUMBER=1.00 NAIL=1.00 LS BEND=1.10 COMP=1.10 SHEAR=1.10 TENS= 1.10

COMPANION LIVE LOAD FACTOR = 1.00

AUTOSOLVE HEELS OFF

TRUSS PLATE MANUFACTURER IS NOT RESPONSIBLE FOR QUALITY CONTROL IN THE TRUSS MANUFACTURING PLANT .

NAIL VALUES

| PLATE | GRIP(DRY) (PSI) MAX | MIN | SHEAR (PLI) MAX | MIN | SECTION (PLI) MAX | MIN |
|---|---|---|---|---|---|---|
| MT20 | 618 | 354 | 1667 | 788 | 1987 | 1656 |

PLATE PLACEMENT TOL. = 0.250 inches

PLATE ROTATION TOL. = 5.0 Deg.

JSI GRIP= 0.83 (L) (INPUT = 0.90 )
JSI METAL= 0.41 (E) (INPUT = 1.00 )

DWG NO. TAM 7190401
STRUCTURAL
COMPONENT ONLY

| JOB NAME | TRUSS NAME | QUANTITY | PLY | JOB DESC. | DRWG NO. |
|---|---|---|---|---|---|
| 401458 | T22S | 1 | 2 | CONDO BLOCK 1UNITS 1- 3<br>TRUSS DESC. | |

Tamarack Roof Truss, Burlington

Version 8.230 S Nov 17 2018 MiTek Industries, Inc. Fri Feb 22 07:52:09 2019 Page 1

ID:_YsKd95knv21l1np5yhk1ZySw5f-0Hlq4YWWKrcBeCpPFp6pgPo3gAshxqRhpdI7R8zifo4

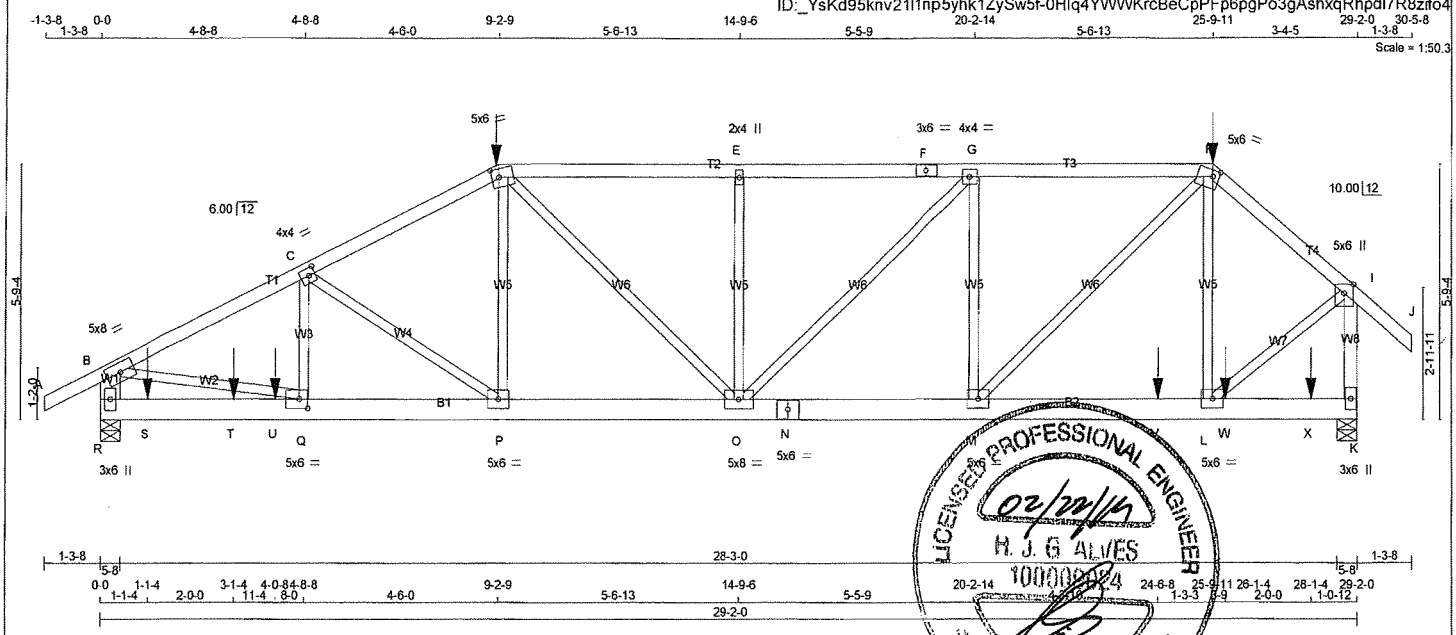


TOTAL WEIGHT = 2 X 143 = 286 lb

[M]

**LUMBER**

N. L. G. A. RULES

| CHORDS | SIZE | | LUMBER | DESCR. |
|---|---|---|---|---|
| A - D | 2x4 | DRY | No.2 | SPF |
| D - F | 2x4 | DRY | No.2 | SPF |
| F - H | 2x4 | DRY | No.2 | SPF |
| H - J | 2x4 | DRY | No.2 | SPF |
| R - B | 2x6 | DRY | No.2 | SPF |
| K - I | 2x4 | DRY | No.2 | SPF |
| R - N | 2x6 | DRY | No.2 | SPF |
| N - K | 2x6 | DRY | No.2 | SPF |
| ALL WEBS EXCEPT | 2x3 | DRY | No.2 | SPF |

DRY: SEASONED LUMBER.

DESIGN CONSISTS OF 2 TRUSSES BUILT SEPARATELY THEN FASTENED TOGETHER AS FOLLOWS:

| CHORDS | #ROWS | SURFACE SPACING (IN) | LOAD(PLF) |
|---|---|---|---|
| TOP CHORDS : (0.122"X3") SPIRAL NAILS | | | |
| A- D | 1 | 12 | SIDE(61.0) |
| D- F | 1 | 12 | SIDE(61.0) |
| F- H | 1 | 12 | SIDE(61.0) |
| H- J | 1 | 12 | SIDE(61.0) |
| K- I | 1 | 12 | TOP |
| R- B | 2 | 12 | TOP |
| BOTTOM CHORDS : (0.122"X3") SPIRAL NAILS | | | |
| R- N | 2 | 12 | SIDE(0.0) |
| N- K | 2 | 12 | SIDE(0.0) |
| WEBS : (0.122"X3") SPIRAL NAILS | | | |
| P- D | 1 | 6 | SIDE(0.8) |
| 2x3 | 1 | 6 | |

NAILS TO BE DRIVEN FROM ONE SIDE ONLY.

GIRDER NAILING ASSUMES NAILED HANGERS ARE FASTENED WITH MIN. 3-0 INCH NAILS.

TOP - COMPONENTS ARE LOADED FROM THE TOP AND MUST BE PLACED ON TOP EDGE OF ALL PLIES FOR THE LOAD TO BE TRANSFERRED TO EACH PLY.

SIDE - PLF SHOWN IS THE EQUIVALENT UDL APPLIED TO ONE SIDE THAT THE CORRESPONDING NAILING PATTERN SHALL BE CAPABLE OF TRANSFERING. REMAINING PLF MUST BE APPLIED ON THE OPPOSITE SIDE OR ON THE TOP.

**PLATES (table is in inches)**

| JT | TYPE | PLATES | W | LEN | Y | X |
|---|---|---|---|---|---|---|
| B | TMVW-t | MT20 | 5.0 | 8.0 | | |
| C | TMWW-t | MT20 | 4.0 | 4.0 | 2.00 | 1.75 |
| D | TTWW-m | MT20 | 5.0 | 6.0 | 2.25 | 2.00 |
| E | TMW+w | MT20 | 2.0 | 4.0 | | |
| F | TS-t | MT20 | 3.0 | 6.0 | | |
| G | TMWW-t | MT20 | 4.0 | 4.0 | | |
| H | TTWW-m | MT20 | 5.0 | 6.0 | 1.75 | 1.75 |
| I | TMVW+p | MT20 | 5.0 | 6.0 | Edge | |
| K | BMV1+p | MT20 | 3.0 | 6.0 | | |
| L, M, P | | | | | | |
| L | BMWW-t | MT20 | 5.0 | 6.0 | | |
| N | BS-t | MT20 | 5.0 | 6.0 | | |
| O | BMWWW-t | MT20 | 5.0 | 8.0 | | |
| Q | BMWW-t | MT20 | 5.0 | 6.0 | 2.50 | 2.25 |
| R | BMV1+p | MT20 | 3.0 | 6.0 | | |

Edge - INDICATES REFERENCE CORNER OF PLATE TOUCHES EDGE OF CHORD.

**DIMENSIONS, SUPPORTS AND LOADINGS SPECIFIED BY FABRICATOR TO BE VERIFIED BY BUILDING DESIGNER**

**BEARINGS**

| JT | FACTORED GROSS REACTION VERT | HORZ | MAXIMUM FACTORED GROSS REACTION DOWN | HORZ | UPLIFT | INPUT BRG IN-SX | REQRD BRG IN-SX |
|---|---|---|---|---|---|---|---|
| R | 3970 | 0 | 3970 | 0 | 0 | 5-8 | 5-8 |
| K | 3878 | 0 | 3878 | 0 | 0 | 5-8 | 5-8 |

**UNFACTORED REACTIONS**

| JT | 1ST LCASE COMBINED | MAX./MIN. COMPONENT REACTIONS SNOW | LIVE | PERM.LIVE | WIND | DEAD | SOIL |
|---|---|---|---|---|---|---|---|
| R | 2994 | 1517 / 0 | 611 / 0 | 0 / 0 | 0 / 0 | 866 / 0 | 0 / 0 |
| K | 2931 | 1468 / 0 | 611 / 0 | 0 / 0 | 0 / 0 | 852 / 0 | 0 / 0 |

BEARING MATERIAL TO BE SPF NO.2 OR BETTER AT JOINT(S) R, K

**BRACING**

TOP CHORD TO BE SHEATHED OR MAX. PURLIN SPACING = 3.90 FT.
MAX. UNBRACED BOTTOM CHORD LENGTH = 10.00 FT OR RIGID CEILING DIRECTLY APPLIED.

ALL PITCH BREAKS AND PERIMETER CORNER JOINTS MUST BE LATERALLY RESTRAINED.

**LOADING**

TOTAL LOAD CASES: (4)

CHORDS

| MEMB. FR-TO | MAX. FACTORED FORCE (LBS) | FACTORED VERT. LOAD (PLF) FROM | TO | LC1 | MAX CSI (LC) | MAX. UNBRAC LENGTH |
|---|---|---|---|---|---|---|
| A- B | 0 / 24 | -77.7 | -77.7 | 0.06 (1) | 10.00 | |
| B- C | -5694 / 0 | -77.7 | -77.7 | 0.27 (1) | 3.90 | |
| C- D | -4414 / 0 | -77.7 | -77.7 | 0.20 (1) | 4.41 | |
| D- E | -4186 / 0 | -77.7 | -77.7 | 0.27 (1) | 4.44 | |
| E- F | -4186 / 0 | -77.7 | -77.7 | 0.27 (1) | 4.44 | |
| F- G | -4186 / 0 | -77.7 | -77.7 | 0.27 (1) | 4.44 | |
| G- H | -3812 / 0 | -77.7 | -77.7 | 0.25 (1) | 4.62 | |
| H- I | -3109 / 0 | -77.7 | -77.7 | 0.12 (1) | 5.15 | |
| I- J | 0 / 34 | -77.7 | -77.7 | 0.06 (1) | 10.00 | |
| R- B | -3650 / 0 | 0.0 | 0.0 | 0.13 (1) | 7.35 | |
| K- I | -3994 / 0 | 0.0 | 0.0 | 0.32 (1) | 5.92 | |
| R- S | 0 / 0 | -39.5 | -39.5 | 0.29 (1) | 10.00 | |
| S- T | 0 / 0 | -39.5 | -39.5 | 0.29 (1) | 10.00 | |
| T- U | 0 / 0 | -39.5 | -39.5 | 0.29 (1) | 10.00 | |
| U- Q | 0 / 0 | -39.5 | -39.5 | 0.29 (1) | 10.00 | |
| Q- P | 0 / 5105 | -39.5 | -39.5 | 0.44 (1) | 10.00 | |
| P- O | 0 / 3950 | -39.5 | -39.5 | 0.31 (1) | 10.00 | |
| O- N | 0 / 3812 | -39.5 | -39.5 | 0.38 (1) | 10.00 | |
| N- M | 0 / 3812 | -39.5 | -39.5 | 0.38 (1) | 10.00 | |
| M- V | 0 / 2383 | -39.5 | -39.5 | 0.49 (1) | 10.00 | |
| V- L | 0 / 2383 | -39.5 | -39.5 | 0.49 (1) | 10.00 | |
| L- W | 0 / 0 | -39.5 | -39.5 | 0.30 (1) | 10.00 | |
| W- X | 0 / 0 | -39.5 | -39.5 | 0.30 (1) | 10.00 | |
| X- K | 0 / 0 | -39.5 | -39.5 | 0.30 (1) | 10.00 | |

WEBS

| MEMB. FR-TO | MAX. FACTORED FORCE (LBS) | MAX CSI (LC) |
|---|---|---|
| Q- C | 0 / 956 | 0.12 (1) |
| P- D | -1417 / 0 | 0.37 (1) |
| L- H | 0 / 948 | 0.12 (1) |
| B- Q | 0 / 236 | 0.03 (3) |
| M- I | 0 / 5173 | 0.64 (1) |
| L- I | 0 / 2958 | 0.37 (1) |
| M- H | 0 / 1987 | 0.25 (1) |
| D- O | 0 / 328 | 0.04 (1) |
| M- G | -823 / 0 | 0.20 (1) |
| O- E | -460 / 0 | 0.11 (1) |
| O- G | 0 / 525 | 0.07 (1) |

DWG NO. TAM 11904102
STRUCTURAL
COMPONENT ONLY 1/2

FACTORED CONCENTRATED LOADS (LBS)

| JT | LOC. | LC1 | MAX- | MAX+ | FACE | DIR. | TYPE | HEEL | CONN. |
|---|---|---|---|---|---|---|---|---|---|
| D | 9-2-9 | -91 | -102 | --- | FRONT | VERT | DEAD | --- | --- |
| D | 9-2-9 | -380 | -380 | --- | FRONT | VERT | SNOW | --- | --- |
| H | 25-9-11 | -34 | -38 | --- | FRONT | VERT | DEAD | --- | --- |
| H | 25-9-11 | -143 | -143 | --- | FRONT | VERT | SNOW | --- | --- |
| S | 1-1-4 | -45 | -57 | --- | BACK | VERT | TOTAL | --- | --- |
| T | 3-1-4 | -45 | -57 | --- | BACK | VERT | TOTAL | --- | --- |
| U | 4-0-8 | -1690 | -1690 | --- | BACK | VERT | TOTAL | --- | --- |
| V | 24-6-8 | -1672 | -1672 | --- | BACK | VERT | TOTAL | --- | --- |
| W | 26-1-4 | -58 | -74 | --- | BACK | VERT | TOTAL | --- | --- |
| X | 28-1-4 | -58 | -74 | --- | BACK | VERT | TOTAL | --- | --- |

**DESIGN CRITERIA**

*** SPECIAL LOADS ANALYSIS ***
GEOMETRY AND/OR BASIC LOADS CHANGED BY USER.
LOADS WERE DERIVED FROM USER INPUT
NO FURTHER MODIFICATIONS WERE MADE

SPECIFIED LOADS:

| | | | | |
|---|---|---|---|---|
| TOP CH. | LL | = | 20.9 | PSF |
| | DL | = | 6.0 | PSF |
| BOT CH. | LL | = | 10.5 | PSF |
| | DL | = | 7.4 | PSF |
| TOTAL LOAD | | = | 44.8 | PSF |

**SPACING = 24.0 IN. C/C**

LOADING IN FLAT SECTION BASED ON A SLOPE OF 2.00/12 MINIMUM

*** NON STANDARD GIRDER ***
ADDT'L USER-DEFINED LOADS APPLIED TO ALL LOAD CASES.

THIS TRUSS IS DESIGNED FOR RESIDENTIAL OR SMALL BUILDING REQUIREMENTS OF PART 9, NBCC 2010, NBCC 2015

THIS DESIGN COMPLIES WITH:
- PART 9 OF BCBC 2018 , OBC 2012
- CSA 086-09, CSA 086-14
- TPIC 2011, TPIC 2014

(60 % OF 20.9 P.S.F. G.S.L. PLUS 8.4 P.S.F. RAIN LOAD) EQUALS 20.9 P.S.F. SPECIFIED ROOF LIVE LOAD

ALLOWABLE DEFL.(LL)= L/360 (0.97")
CALCULATED VERT. DEFL.(LL) = L/ 999 (0.09")
ALLOWABLE DEFL.(TL)= L/360 (0.97")
CALCULATED VERT. DEFL.(TL) = L/ 999 (0.16")

CSI: TC=0.32/1.00 (I-K:1) , BC=0.49/1.00 (L-M:1) , WB=0.64/1.00 (B-Q:1) , SSI=0.55/1.00 (Q-R:1)

DOL LUMBER=1.00 NAIL=1.00 LS BEND=1.00 COMP=1.00 SHEAR=1.00 TENS= 1.00

COMPANION LIVE LOAD FACTOR = 1.00

AUTOSOLVE RIGHT HEEL ONLY

TRUSS PLATE MANUFACTURER IS NOT RESPONSIBLE FOR QUALITY CONTROL IN THE TRUSS MANUFACTURING PLANT .

NAIL VALUES

| PLATE | GRIP(DRY) (PSI) MAX | MIN | SHEAR (PLI) MAX | MIN | SECTION (PLI) MAX | MIN |
|---|---|---|---|---|---|---|
| MT20 | 618 | 354 | 1667 | 788 | 1987 | 1656 |

PLATE PLACEMENT TOL. = 0.250 inches

PLATE ROTATION TOL. = 5.0 Deg.

JSI GRIP= 0.90 (Q) (INPUT = 0.90 )
JSI METAL= 0.64 (Q) (INPUT = 1.00 )

LICENSED PROFESSIONAL ENGINEER
02/22/19
H. J. G. ALVES
100008224
ONTARIO

| JOB NAME | TRUSS NAME | QUANTITY | PLY | JOB DESC. | DRWG NO. |
|---|---|---|---|---|---|
| 401458 | T23 | 1 | 1 | CONDO BLOCK 1UNITS 1- 3<br>TRUSS DESC. | |

Tamarack Roof Truss, Burlington

Version 8.230 S Nov 17 2018 MiTek Industries, Inc. Fri Feb 22 07:52:10 2019 Page 1

ID:_YsKd95knv21l1np5yhk1ZySw5f-UTsDluX859k2GLObpXd2DcKBiaATgKpq2H2gzazifo3

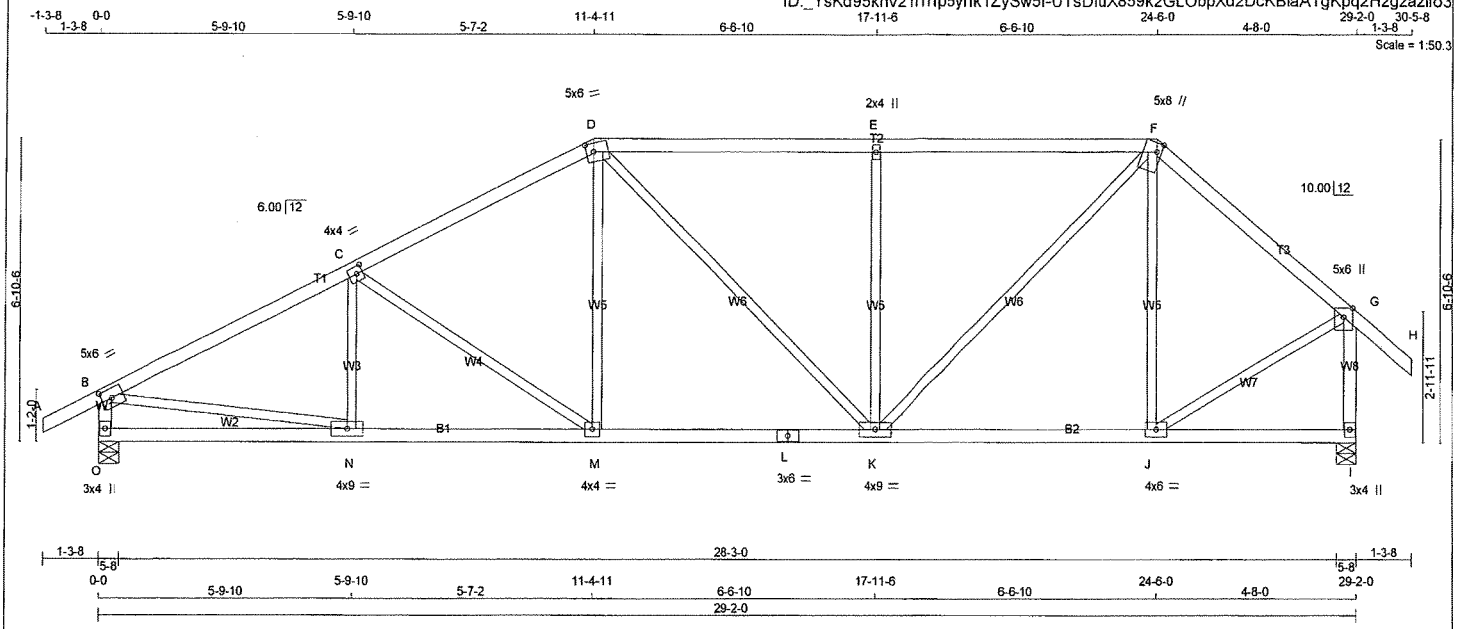


TOTAL WEIGHT = 124 lb

[M][F]

**LUMBER**

N. L. G. A. RULES

| CHORDS | SIZE | | LUMBER | DESCR. |
|---|---|---|---|---|
| A - D | 2x4 | DRY | No.2 | SPF |
| D - F | 2x4 | DRY | No.2 | SPF |
| F - H | 2x4 | DRY | No.2 | SPF |
| O - B | 2x4 | DRY | No.2 | SPF |
| I - G | 2x4 | DRY | No.2 | SPF |
| O - L | 2x4 | DRY | No.2 | SPF |
| L - I | 2x4 | DRY | No.2 | SPF |
| ALL WEBS EXCEPT | 2x3 | DRY | No.2 | SPF |

DRY: SEASONED LUMBER.

**PLATES (table ls in inches)**

| JT | TYPE | PLATES | W | LEN | Y | X |
|---|---|---|---|---|---|---|
| B | TMVW-t | MT20 | 5.0 | 6.0 | 2.50 | 2.75 |
| C | TMWW-t | MT20 | 4.0 | 4.0 | 2.00 | 1.75 |
| D | TTWW-m | MT20 | 5.0 | 6.0 | 2.25 | 2.00 |
| E | TMW+w | MT20 | 2.0 | 4.0 | | |
| F | TTWW+m | MT20 | 5.0 | 8.0 | Edge | 1.25 |
| G | TMVW+p | MT20 | 5.0 | 6.0 | Edge | |
| I | BMV1+p | MT20 | 3.0 | 4.0 | | |
| J | BMWW-t | MT20 | 4.0 | 6.0 | | |
| K | BMWWW-t | MT20 | 4.0 | 9.0 | | |
| L | BS-t | MT20 | 3.0 | 6.0 | | |
| M | BMWW-t | MT20 | 4.0 | 4.0 | | |
| N | BMWW-t | MT20 | 4.0 | 9.0 | | |
| O | BMV1+p | MT20 | 3.0 | 4.0 | | |

Edge - INDICATES REFERENCE CORNER OF PLATE TOUCHES EDGE OF CHORD.

**DIMENSIONS, SUPPORTS AND LOADINGS SPECIFIED BY FABRICATOR TO BE VERIFIED BY BUILDING DESIGNER**

**BEARINGS**

| JT | FACTORED GROSS REACTION VERT | HORZ | MAXIMUM FACTORED GROSS REACTION DOWN | HORZ | UPLIFT | INPUT BRG IN-SX | REQRD BRG IN-SX |
|---|---|---|---|---|---|---|---|
| O | 1815 | 0 | 1815 | 0 | 0 | 5-8 | 5-8 |
| I | 1817 | 0 | 1817 | 0 | 0 | 5-8 | 5-8 |

**UNFACTORED REACTIONS**

| JT | 1ST LCASE COMBINED | MAX./MIN. COMPONENT REACTIONS SNOW | LIVE | PERM.LIVE | WIND | DEAD | SOIL |
|---|---|---|---|---|---|---|---|
| O | 1380 | 666 / 0 | 306 / 0 | 0 / 0 | 0 / 0 | 407 / 0 | 0 / 0 |
| I | 1381 | 667 / 0 | 306 / 0 | 0 / 0 | 0 / 0 | 407 / 0 | 0 / 0 |

BEARING MATERIAL TO BE SPF NO.2 OR BETTER AT JOINT(S) O, I

**BRACING**

TOP CHORD TO BE SHEATHED OR MAX. PURLIN SPACING = 4.02 FT.
MAX. UNBRACED BOTTOM CHORD LENGTH = 10.00 FT OR RIGID CEILING DIRECTLY APPLIED.

ALL PITCH BREAKS AND PERIMETER CORNER JOINTS MUST BE LATERALLY RESTRAINED.

**LOADING**

TOTAL LOAD CASES: (4)

CHORDS

| MEMB. FR-TO | MAX. FACTORED FORCE (LBS) | FACTORED VERT. LOAD (PLF) FROM | TO | LC1 | MAX CSI (LC) | MAX. UNBRAC LENGTH |
|---|---|---|---|---|---|---|
| A- B | 0 / 24 | -77.7 | -77.7 | 0.10 | (1) | 10.00 |
| B- C | -2459 / 0 | -77.7 | -77.7 | 0.43 | (1) | 4.02 |
| C- D | -2059 / 0 | -77.7 | -77.7 | 0.38 | (1) | 4.36 |
| D- E | -1877 / 0 | -77.7 | -77.7 | 0.49 | (1) | 4.37 |
| E- F | -1877 / 0 | -77.7 | -77.7 | 0.49 | (1) | 4.37 |
| F- G | -1369 / 0 | -77.7 | -77.7 | 0.25 | (1) | 5.30 |
| G- H | 0 / 34 | -77.7 | -77.7 | 0.11 | (1) | 10.00 |
| O- B | -1719 / 0 | 0.0 | 0.0 | 0.17 | (1) | 6.35 |
| I- G | -1749 / 0 | 0.0 | 0.0 | 0.28 | (1) | 6.30 |
| O- N | 0 / 0 | -39.5 | -39.5 | 0.22 | (3) | 10.00 |
| N- M | 0 / 2219 | -39.5 | -39.5 | 0.52 | (2) | 10.00 |
| M- L | 0 / 1828 | -39.5 | -39.5 | 0.51 | (2) | 10.00 |
| L- K | 0 / 1828 | -39.5 | -39.5 | 0.51 | (2) | 10.00 |
| K- J | 0 / 1044 | -39.5 | -39.5 | 0.39 | (2) | 10.00 |
| J- I | 0 / 0 | -39.5 | -39.5 | 0.23 | (3) | 10.00 |

WEBS

| MEMB. FR-TO | MAX. FACTORED FORCE (LBS) | MAX CSI (LC) |
|---|---|---|
| N- C | -84 / 135 | 0.03 (3) |
| C- M | -478 / 0 | 0.42 (1) |
| M- D | 0 / 534 | 0.12 (2) |
| D- K | 0 / 70 | 0.02 (1) |
| K- E | -623 / 0 | 0.50 (1) |
| K- F | 0 / 1178 | 0.27 (1) |
| J- F | -334 / 0 | 0.27 (1) |
| B- N | 0 / 2243 | 0.50 (1) |
| J- G | 0 / 1199 | 0.27 (1) |

LICENSED PROFESSIONAL ENGINEER
02/22/19
H. J. G. ALVES
100009024
PROVINCE OF ONTARIO

**DESIGN CRITERIA**

SPECIFIED LOADS:

| | | | | |
|---|---|---|---|---|
| TOP CH. | LL | = | 20.9 | PSF |
| | DL | = | 6.0 | PSF |
| BOT CH. | LL | = | 10.5 | PSF |
| | DL | = | 7.4 | PSF |
| TOTAL LOAD | | = | 44.8 | PSF |

**SPACING = 24.0 IN. C/C**

LOADING IN FLAT SECTION BASED ON A SLOPE OF 2.00/12 MINIMUM

THIS TRUSS IS DESIGNED FOR RESIDENTIAL OR SMALL BUILDING REQUIREMENTS OF PART 9, NBCC 2010, NBCC 2015

THIS DESIGN COMPLIES WITH:
- PART 9 OF BCBC 2018 , OBC 2012
- CSA 086-09, CSA 086-14
- TPIC 2011, TPIC 2014

(60 % OF 20.9 P.S.F. G.S.L. PLUS 8.4 P.S.F. RAIN LOAD) EQUALS 20.9 P.S.F. SPECIFIED ROOF LIVE LOAD

ALLOWABLE DEFL.(LL)= L/360 (0.97")
CALCULATED VERT. DEFL.(LL) = L/ 999 (0.10")
ALLOWABLE DEFL.(TL)= L/360 (0.97")
CALCULATED VERT. DEFL.(TL) = L/ 999 (0.18")

CSI: TC=0.49/1.00 (D-E:1) , BC=0.52/1.00 (M-N:2) , WB=0.50/1.00 (B-N:1) , SSI=0.25/1.00 (D-E:1)

DOL LUMBER=1.00 NAIL=1.00 LS BEND=1.10 COMP=1.10 SHEAR=1.10 TENS= 1.10

COMPANION LIVE LOAD FACTOR = 1.00

TRUSS PLATE MANUFACTURER IS NOT RESPONSIBLE FOR QUALITY CONTROL IN THE TRUSS MANUFACTURING PLANT .

NAIL VALUES

| PLATE | GRIP(DRY) (PSI) MAX | MIN | SHEAR (PLI) MAX | MIN | SECTION (PLI) MAX | MIN |
|---|---|---|---|---|---|---|
| MT20 | 618 | 354 | 1667 | 788 | 1987 | 1656 |

PLATE PLACEMENT TOL. = 0.250 inches

PLATE ROTATION TOL. = 5.0 Deg.

LS GRIP= 0.90 (B) (INPUT = 0.90 )
LS METAL= 0.65 (B) (INPUT = 1.00 )

DWG NO. TAM T1904103
STRUCTURAL COMPONENT ONLY

| JOB NAME | TRUSS NAME | QUANTITY | PLY | JOB DESC. | DRWG NO. |
|---|---|---|---|---|---|
| 401458 | T24 | 1 | 1 | CONDO BLOCK 1UNITS 1- 3 | |
| | | | | TRUSS DESC. | |

Tamarack Roof Truss, Burlington

Version 8.230 S Nov 17 2018 MiTek Industries, Inc. Fri Feb 22 07:52:11 2019 Page 1

ID:_YsKd95knv21I1np5yhk1ZySw5f-yfQbVEXmsSsvuVyoNE8HmqtKs_WdPnJzGxnDV1zifo2

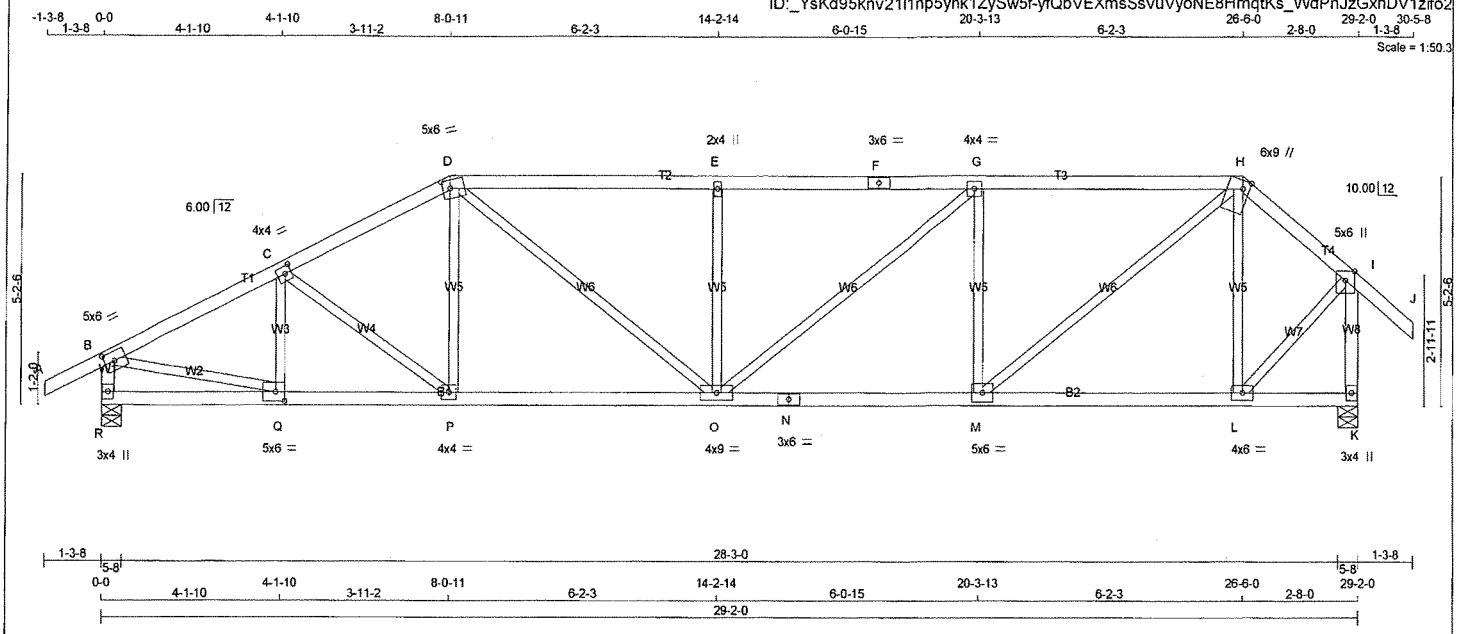


TOTAL WEIGHT = 121 lb

[M]

**LUMBER**

N. L. G. A. RULES

| CHORDS | SIZE | | LUMBER | DESCR. |
|---|---|---|---|---|
| A - D | 2x4 | DRY | No.2 | SPF |
| D - F | 2x4 | DRY | No.2 | SPF |
| F - H | 2x4 | DRY | No.2 | SPF |
| H - J | 2x4 | DRY | No.2 | SPF |
| R - B | 2x4 | DRY | No.2 | SPF |
| K - I | 2x4 | DRY | No.2 | SPF |
| R - N | 2x4 | DRY | No.2 | SPF |
| N - K | 2x4 | DRY | No.2 | SPF |
| ALL WEBS EXCEPT | 2x3 | DRY | No.2 | SPF |

DRY: SEASONED LUMBER.

**PLATES (table is in inches)**

| JT | TYPE | PLATES | W | LEN | Y | X |
|---|---|---|---|---|---|---|
| B | TMVW-t | MT20 | 5.0 | 6.0 | 2.50 | 2.75 |
| C | TMWW-t | MT20 | 4.0 | 4.0 | 2.00 | 1.75 |
| D | TTWW-m | MT20 | 5.0 | 6.0 | 2.25 | 2.00 |
| E | TMW+w | MT20 | 2.0 | 4.0 | | |
| F | TS-t | MT20 | 3.0 | 6.0 | | |
| G | TMWW-t | MT20 | 4.0 | 4.0 | | |
| H | TTWW+m | MT20 | 6.0 | 9.0 | Edge | 1.75 |
| I | TMVW+p | MT20 | 5.0 | 6.0 | Edge | |
| K | BMV1+p | MT20 | 3.0 | 4.0 | | |
| L | BMWW-t | MT20 | 4.0 | 6.0 | | |
| M | BMWW-t | MT20 | 5.0 | 6.0 | | |
| N | BS-t | MT20 | 3.0 | 6.0 | | |
| O | BMWWW-t | MT20 | 4.0 | 9.0 | | |
| P | BMWW-t | MT20 | 4.0 | 4.0 | | |
| Q | BMWW-t | MT20 | 5.0 | 6.0 | 2.50 | 2.50 |
| R | BMV1+p | MT20 | 3.0 | 4.0 | | |

Edge - INDICATES REFERENCE CORNER OF PLATE TOUCHES EDGE OF CHORD.

**DIMENSIONS, SUPPORTS AND LOADINGS SPECIFIED BY FABRICATOR TO BE VERIFIED BY BUILDING DESIGNER**

**BEARINGS**

| JT | FACTORED GROSS REACTION VERT | HORZ | MAXIMUM FACTORED GROSS REACTION DOWN | HORZ | UPLIFT | INPUT BRG | REQRD BRG |
|---|---|---|---|---|---|---|---|
| R | 1815 | 0 | 1815 | 0 | 0 | 5-8 | 5-8 |
| K | 1817 | 0 | 1817 | 0 | 0 | 5-8 | 5-8 |

**UNFACTORED REACTIONS**

| JT | 1ST LCASE COMBINED | MAX./MIN. COMPONENT REACTIONS SNOW | LIVE | PERM.LIVE | WIND | DEAD | SOIL |
|---|---|---|---|---|---|---|---|
| R | 1380 | 666 / 0 | 306 / 0 | 0 / 0 | 0 / 0 | 407 / 0 | 0 / 0 |
| K | 1381 | 667 / 0 | 306 / 0 | 0 / 0 | 0 / 0 | 407 / 0 | 0 / 0 |

BEARING MATERIAL TO BE SPF NO.2 OR BETTER AT JOINT(S) R, K

**BRACING**

TOP CHORD TO BE SHEATHED OR MAX. PURLIN SPACING = 3.73 FT.
MAX. UNBRACED BOTTOM CHORD LENGTH = 10.00 FT OR RIGID CEILING DIRECTLY APPLIED.

ALL PITCH BREAKS AND PERIMETER CORNER JOINTS MUST BE LATERALLY RESTRAINED.

**LOADING**

TOTAL LOAD CASES: (4)

CHORDS

| MEMB. FR-TO | MAX. FACTORED FORCE (LBS) | FACTORED VERT. LOAD (PLF) FROM | TO | LC1 | MAX CSI (LC) | MAX. UNBRAC LENGTH |
|---|---|---|---|---|---|---|
| A- B | 0 / 24 | -77.7 | -77.7 | 0.10 (1) | 10.00 | |
| B- C | -2364 / 0 | -77.7 | -77.7 | 0.27 (1) | 4.23 | |
| C- D | -2311 / 0 | -77.7 | -77.7 | 0.26 (1) | 4.27 | |
| D- E | -2619 / 0 | -77.7 | -77.7 | 0.59 (1) | 3.74 | |
| E- F | -2619 / 0 | -77.7 | -77.7 | 0.59 (1) | 3.73 | |
| F- G | -2619 / 0 | -77.7 | -77.7 | 0.59 (1) | 3.73 | |
| G- H | -2228 / 0 | -77.7 | -77.7 | 0.55 (1) | 4.03 | |
| H- I | -1156 / 0 | -77.7 | -77.7 | 0.11 (1) | 5.80 | |
| I- J | 0 / 34 | -77.7 | -77.7 | 0.11 (1) | 10.00 | |
| R- B | -1740 / 0 | 0.0 | 0.0 | 0.18 (1) | 6.32 | |
| K- I | -1798 / 0 | 0.0 | 0.0 | 0.29 (1) | 6.23 | |
| R- Q | 0 / 0 | -39.5 | -39.5 | 0.12 (3) | 10.00 | |
| Q- P | 0 / 2127 | -39.5 | -39.5 | 0.47 (2) | 10.00 | |
| P- O | 0 / 2058 | -39.5 | -39.5 | 0.50 (2) | 10.00 | |
| O- N | 0 / 2228 | -39.5 | -39.5 | 0.53 (2) | 10.00 | |
| N- M | 0 / 2228 | -39.5 | -39.5 | 0.53 (2) | 10.00 | |
| M- L | 0 / 871 | -39.5 | -39.5 | 0.33 (2) | 10.00 | |
| L- K | 0 / 0 | -39.5 | -39.5 | 0.18 (3) | 10.00 | |

WEBS

| MEMB. FR-TO | MAX. FACTORED FORCE (LBS) | MAX CSI (LC) |
|---|---|---|
| Q- C | -290 / 0 | 0.06 (1) |
| C- P | -92 / 0 | 0.04 (1) |
| P- D | 0 / 309 | 0.07 (2) |
| D- O | 0 / 715 | 0.16 (1) |
| O- E | -517 / 0 | 0.21 (1) |
| O- G | 0 / 501 | 0.11 (1) |
| M- G | -829 / 0 | 0.33 (1) |
| M- H | 0 / 1730 | 0.39 (1) |
| L- H | -634 / 0 | 0.25 (1) |
| B- Q | 0 / 2172 | 0.49 (1) |
| L- I | 0 / 1222 | 0.27 (1) |

**DESIGN CRITERIA**

SPECIFIED LOADS:

| | | | | |
|---|---|---|---|---|
| TOP CH. | LL | = | 20.9 | PSF |
| | DL | = | 6.0 | PSF |
| BOT CH. | LL | = | 10.5 | PSF |
| | DL | = | 7.4 | PSF |
| TOTAL LOAD | | = | 44.8 | PSF |

**SPACING = 24.0 IN. C/C**

LOADING IN FLAT SECTION BASED ON A SLOPE OF 2.00/12 MINIMUM

THIS TRUSS IS DESIGNED FOR RESIDENTIAL OR SMALL BUILDING REQUIREMENTS OF PART 9, NBCC 2010, NBCC 2015

THIS DESIGN COMPLIES WITH:
- PART 9 OF BCBC 2018 , OBC 2012
- CSA 086-09, CSA 086-14
- TPIC 2011, TPIC 2014

(60 % OF 20.9 P.S.F. G.S.L. PLUS 8.4 P.S.F. RAIN LOAD) EQUALS 20.9 P.S.F. SPECIFIED ROOF LIVE LOAD

ALLOWABLE DEFL.(LL)= L/360 (0.97")
CALCULATED VERT. DEFL.(LL) = L/ 999 (0.12")
ALLOWABLE DEFL.(TL)= L/360 (0.97")
CALCULATED VERT. DEFL.(TL) = L/ 999 (0.22")

CSI: TC=0.59/1.00 (E-G:1) , BC=0.53/1.00 (M-O:2) , WB=0.49/1.00 (B-Q:1) , SSI=0.22/1.00 (G-H:1)

DOL LUMBER=1.00 NAIL=1.00 LS BEND=1.10 COMP=1.10 SHEAR=1.10 TENS= 1.10

COMPANION LIVE LOAD FACTOR = 1.00

TRUSS PLATE MANUFACTURER IS NOT RESPONSIBLE FOR QUALITY CONTROL IN THE TRUSS MANUFACTURING PLANT .

NAIL VALUES

| PLATE | GRIP(DRY) (PSI) MAX | MIN | SHEAR (PLI) MAX | MIN | SECTION (PLI) MAX | MIN |
|---|---|---|---|---|---|---|
| MT20 | 618 | 354 | 1667 | 788 | 1987 | 1656 |

PLATE PLACEMENT TOL. = 0.250 inches

PLATE ROTATION TOL. = 5.0 Deg.

USI GRIP= 0.88 (B) (INPUT = 0.90 )
USI METAL= 0.72 (N) (INPUT = 1.00 )

LICENSED PROFESSIONAL ENGINEER
H. J. G. ALVES
100000874
PROVINCE OF ONTARIO

DWG NO. TAM T19041104
STRUCTURAL
COMPONENT ONLY

| JOB NAME | TRUSS NAME | QUANTITY | PLY | JOB DESC. | DRWG NO. |
|---|---|---|---|---|---|
| 401458 | T25A | 1 | 2 | CONDO BLOCK 1UNITS 1- 3<br>TRUSS DESC. | |

Tamarack Roof Truss, Burlington

Version 8.230 S Nov 17 2018 MiTek Industries, Inc. Fri Feb 22 07:52:12 2019 Page 1

ID:_YsKd95knv21l1np5yhk1ZySw5f-Qs_ziaYPdm_mVfX_wyfWl1QWkOtw8Fx7VbXn1Tzifo1

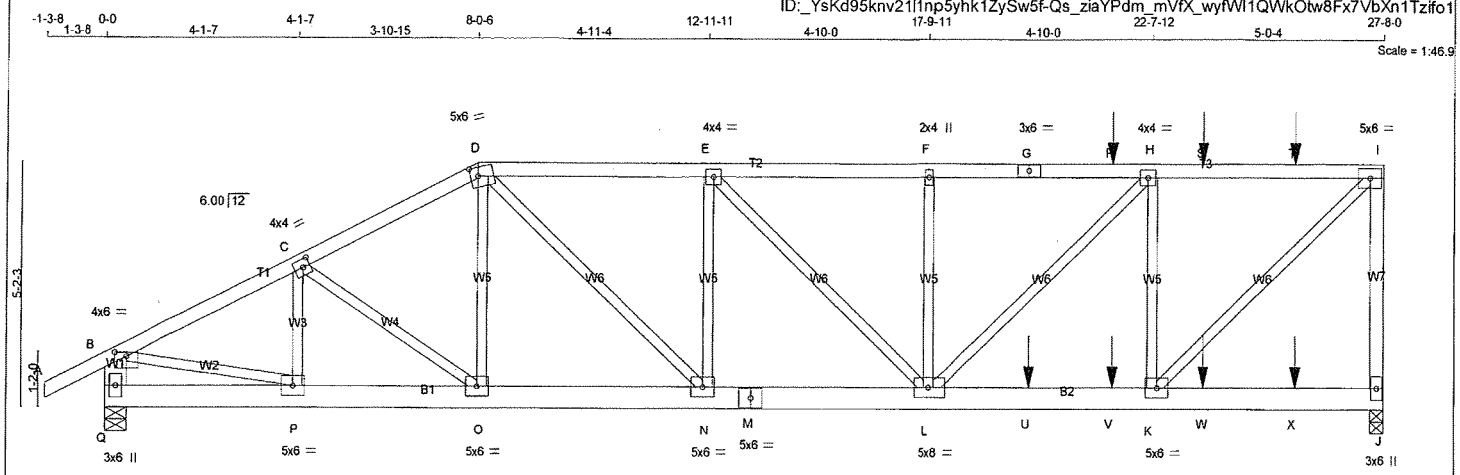


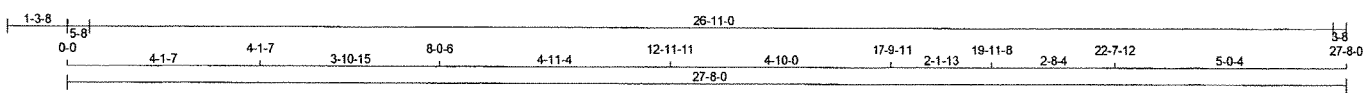


TOTAL WEIGHT = 2 X 134 = 268 lb

[M]

**LUMBER**

N. L. G. A. RULES

| CHORDS | SIZE | | LUMBER | DESCR. |
|---|---|---|---|---|
| A - D | 2x4 | DRY | No.2 | SPF |
| D - G | 2x4 | DRY | No.2 | SPF |
| G - I | 2x4 | DRY | No.2 | SPF |
| J - I | 2x4 | DRY | No.2 | SPF |
| Q - B | 2x6 | DRY | No.2 | SPF |
| Q - M | 2x6 | DRY | No.2 | SPF |
| M - J | 2x6 | DRY | No.2 | SPF |
| ALL WEBS EXCEPT | 2x3 | DRY | No.2 | SPF |

DRY: SEASONED LUMBER.

DESIGN CONSISTS OF 2 TRUSSES BUILT SEPARATELY THEN FASTENED TOGETHER AS FOLLOWS:

| CHORDS | #ROWS | SURFACE SPACING (IN) | LOAD(PLF) |
|---|---|---|---|
| TOP CHORDS : (0.122"X3") SPIRAL NAILS | | | |
| A- D | 1 | 12 | TOP |
| D- G | 1 | 12 | TOP |
| G- I | 1 | 12 | SIDE(0.0) |
| I- J | 1 | 12 | TOP |
| Q- B | 2 | 12 | TOP |
| BOTTOM CHORDS : (0.122"X3") SPIRAL NAILS | | | |
| Q- M | 2 | 12 | TOP |
| M- J | 2 | 12 | SIDE(0.0) |
| WEBS : (0.122"X3") SPIRAL NAILS | | | |
| 2x3 | 1 | 6 | |

NAILS TO BE DRIVEN FROM ONE SIDE ONLY.

GIRDER NAILING ASSUMES NAILED HANGERS ARE FASTENED WITH MIN. 3-0 INCH NAILS.

TOP - COMPONENTS ARE LOADED FROM THE TOP AND MUST BE PLACED ON TOP EDGE OF ALL PLIES FOR THE LOAD TO BE TRANSFERRED TO EACH PLY.

SIDE - PLF SHOWN IS THE EQUIVALENT UDL APPLIED TO ONE SIDE THAT THE CORRESPONDING NAILING PATTERN SHALL BE CAPABLE OF TRANSFERING. REMAINING PLF MUST BE APPLIED ON THE OPPOSITE SIDE OR ON THE TOP.

**PLATES (table is in inches)**

| JT | TYPE | PLATES | W | LEN | Y | X |
|---|---|---|---|---|---|---|
| B | TMVW-p | MT20 | 4.0 | 6.0 | 1.00 | 3.00 |
| C | TMWW-t | MT20 | 4.0 | 4.0 | 2.00 | 1.75 |
| D | TTWW-m | MT20 | 5.0 | 6.0 | 2.25 | 2.00 |
| E | TMWW-t | MT20 | 4.0 | 4.0 | | |
| F | TMW+w | MT20 | 2.0 | 4.0 | | |
| G | TS-t | MT20 | 3.0 | 6.0 | | |
| H | TMWW-t | MT20 | 4.0 | 4.0 | | |
| I | TMVW-t | MT20 | 5.0 | 6.0 | | |
| J | BMV1+p | MT20 | 3.0 | 6.0 | | |
| K, N, O, P | | | | | | |
| K | BMWW-t | MT20 | 5.0 | 6.0 | | |
| L | BMWWW-t | MT20 | 5.0 | 8.0 | | |
| M | BS-t | MT20 | 5.0 | 6.0 | | |
| Q | BMV1+p | MT20 | 3.0 | 6.0 | | |

**DIMENSIONS, SUPPORTS AND LOADINGS SPECIFIED BY FABRICATOR TO BE VERIFIED BY BUILDING DESIGNER**

**BEARINGS**

| JT | FACTORED GROSS REACTION VERT | HORZ | MAXIMUM FACTORED GROSS REACTION DOWN | HORZ | UPLIFT | INPUT BRG IN-SX | REQRD BRG IN-SX |
|---|---|---|---|---|---|---|---|
| J | 2472 | 0 | 2472 | 0 | 0 | 3-8 | 3-8 |
| Q | 2009 | 0 | 2009 | 0 | 0 | 5-8 | 5-8 |

**UNFACTORED REACTIONS**

MAX./MIN. COMPONENT REACTIONS

| JT | 1ST LCASE COMBINED | SNOW | LIVE | PERM.LIVE | WIND | DEAD | SOIL |
|---|---|---|---|---|---|---|---|
| J | 1884 | 895 / 0 | 429 / 0 | 0 / 0 | 0 / 0 | 560 / 0 | 0 / 0 |
| Q | 1526 | 743 / 0 | 334 / 0 | 0 / 0 | 0 / 0 | 449 / 0 | 0 / 0 |

BEARING MATERIAL TO BE SPF NO.2 OR BETTER AT JOINT(S) J, Q

**BRACING**

TOP CHORD TO BE SHEATHED OR MAX. PURLIN SPACING = 4.91 FT.
MAX. UNBRACED BOTTOM CHORD LENGTH = 10.00 FT OR RIGID CEILING DIRECTLY APPLIED.

ALL PITCH BREAKS AND PERIMETER CORNER JOINTS MUST BE LATERALLY RESTRAINED.

**LOADING**

TOTAL LOAD CASES: (4)

CHORDS

| MEMB. FR-TO | MAX. FACTORED FORCE (LBS) | FACTORED VERT. LOAD (PLF) FROM | TO | LC1 | MAX CSI (LC) | MAX. UNBRAC LENGTH |
|---|---|---|---|---|---|---|
| A- B | 0 / 24 | -77.7 | -77.7 | 0.06 (1) | 10.00 | |
| B- C | -2712 / 0 | -77.7 | -77.7 | 0.13 (1) | 5.43 | |
| C- D | -2720 / 0 | -77.7 | -77.7 | 0.13 (1) | 5.42 | |
| D- E | -3116 / 0 | -77.7 | -77.7 | 0.20 (1) | 5.07 | |
| E- F | -3279 / 0 | -77.7 | -77.7 | 0.20 (1) | 4.96 | |
| F- G | -3279 / 0 | -77.7 | -77.7 | 0.24 (1) | 4.91 | |
| G- R | -3279 / 0 | -77.7 | -77.7 | 0.24 (1) | 4.91 | |
| R- H | -3279 / 0 | -77.7 | -77.7 | 0.24 (1) | 4.91 | |
| H- S | -2332 / 0 | -77.7 | -77.7 | 0.21 (1) | 5.63 | |
| S- T | -2332 / 0 | -77.7 | -77.7 | 0.21 (1) | 5.63 | |
| T- I | -2332 / 0 | -77.7 | -77.7 | 0.21 (1) | 5.63 | |
| J- I | -2418 / 0 | 0.0 | 0.0 | 0.52 (1) | 7.25 | |
| Q- B | -1912 / 0 | 0.0 | 0.0 | 0.07 (1) | 7.81 | |
| Q- P | 0 / 0 | -39.5 | -39.5 | 0.05 (2) | 10.00 | |
| P- O | 0 / 2438 | -39.5 | -39.5 | 0.20 (1) | 10.00 | |
| O- N | 0 / 2423 | -39.5 | -39.5 | 0.20 (1) | 10.00 | |
| N- M | 0 / 3116 | -39.5 | -39.5 | 0.33 (1) | 10.00 | |
| M- L | 0 / 3116 | -39.5 | -39.5 | 0.33 (1) | 10.00 | |
| L- U | 0 / 2332 | -39.5 | -39.5 | 0.46 (1) | 10.00 | |
| U- V | 0 / 2332 | -39.5 | -39.5 | 0.46 (1) | 10.00 | |
| V- K | 0 / 2332 | -39.5 | -39.5 | 0.46 (1) | 10.00 | |
| K- W | 0 / 0 | -39.5 | -39.5 | 0.14 (2) | 10.00 | |
| W- X | 0 / 0 | -39.5 | -39.5 | 0.14 (2) | 10.00 | |
| X- J | 0 / 0 | -39.5 | -39.5 | 0.14 (2) | 10.00 | |

WEBS

| MEMB. FR-TO | MAX. FACTORED FORCE (LBS) | MAX CSI (LC) |
|---|---|---|
| P- C | -356 / 0 | 0.03 (1) |
| O- D | 0 / 25 | 0.00 (1) |
| N- E | 0 / 295 | 0.04 (2) |
| B- P | 0 / 2480 | 0.31 (1) |
| K- I | 0 / 3228 | 0.40 (1) |
| D- N | 0 / 966 | 0.12 (1) |
| K- H | -1491 / 0 | 0.29 (1) |
| N- E | -593 / 0 | 0.11 (1) |
| L- H | 0 / 1335 | 0.17 (1) |
| E- L | 0 / 229 | 0.03 (1) |
| L- [illegible] | 33[illegible] | 0.04 (1) |

FACTORED CONCENTRATED LOADS (LBS)

| JT | LOC. | LC1 | MAX- | MAX+ | FACE | DIR. | TYPE | REEL | CONN. |
|---|---|---|---|---|---|---|---|---|---|
| R | 21-9-4 | -46 | -46 | --- | FRONT | VERT | TOTAL | --- | --- |
| S | 23-9-4 | -46 | -46 | --- | FRONT | VERT | TOTAL | --- | --- |
| T | 25-9-4 | -46 | -46 | --- | FRONT | VERT | TOTAL | --- | --- |
| U | 19-11-8 | -894 | -894 | --- | FRONT | VERT | TOTAL | --- | --- |
| V | 21-9-4 | -34 | -42 | --- | FRONT | VERT | TOTAL | --- | --- |
| W | 23-9-4 | -34 | -42 | --- | FRONT | VERT | TOTAL | --- | --- |
| X | 25-9-4 | -34 | -42 | --- | FRONT | VERT | TOTAL | --- | --- |

**DESIGN CRITERIA**

SPECIFIED LOADS:

| | | | | |
|---|---|---|---|---|
| TOP CH. | LL | = | 20.9 | PSF |
| | DL | = | 6.0 | PSF |
| BOT CH. | LL | = | 10.5 | PSF |
| | DL | = | 7.4 | PSF |
| TOTAL LOAD | | = | 44.8 | PSF |

**SPACING = 24.0 IN. C/C**

LOADING IN FLAT SECTION BASED ON A SLOPE OF 2.00/12 MINIMUM

THIS TRUSS IS DESIGNED FOR RESIDENTIAL OR SMALL BUILDING REQUIREMENTS OF PART 9, NBCC 2010, NBCC 2015

THIS DESIGN COMPLIES WITH:
- PART 9 OF BCBC 2018 , OBC 2012
- CSA 086-09, CSA 086-14
- TPIC 2011, TPIC 2014

(60 % OF 20.9 P.S.F. G.S.L. PLUS 8.4 P.S.F. RAIN LOAD) EQUALS 20.9 P.S.F. SPECIFIED ROOF LIVE LOAD

ALLOWABLE DEFL.(LL)= L/360 (0.92")
CALCULATED VERT. DEFL.(LL) = L/ 999 (0.07")
ALLOWABLE DEFL.(TL)= L/360 (0.92")
CALCULATED VERT. DEFL.(TL) = L/ 999 (0.13")

CSI: TC=0.52/1.00 (I-J:1) , BC=0.46/1.00 (K-L:1) , WB=0.40/1.00 (I-K:1) , SSI=0.20/1.00 (K-L:1)

DOL LUMBER=1.00 NAIL=1.00 LS BEND=1.00 COMP=1.00 SHEAR=1.00 TENS= 1.00

COMPANION LIVE LOAD FACTOR = 1.00

AUTOSOLVE RIGHT HEEL ONLY

TRUSS PLATE MANUFACTURER IS NOT RESPONSIBLE FOR QUALITY CONTROL IN THE TRUSS MANUFACTURING PLANT .

NAIL VALUES

| PLATE | GRIP(DRY) (PSI) MAX | MIN | SHEAR (PLI) MAX | MIN | SECTION (PLI) MAX | MIN |
|---|---|---|---|---|---|---|
| MT20 | 618 | 354 | 1667 | 788 | 1987 | 1656 |

PLATE PLACEMENT TOL. = 0.250 inches

PLATE ROTATION TOL. = 5.0 Deg.

JSI GRIP= 0.81 (K) (INPUT = 0.90 )
JSI METAL= 0.34 (I) (INPUT = 1.00 )

LICENSED PROFESSIONAL ENGINEER
02/22/19
H. J. G. ALVES
100009024
PROVINCE OF ONTARIO

DWG NO. TAM T1904105
STRUCTURAL COMPONENT ONLY

| JOB NAME | TRUSS NAME | QUANTITY | PLY | JOB DESC. | DRWG NO. |
|---|---|---|---|---|---|
| 401458 | T26A | 1 | 1 | CONDO BLOCK 1UNITS 1- 3<br>TRUSS DESC. | |

Tamarack Roof Truss, Burlington

Version 8.230 S Nov 17 2018 MiTek Industries, Inc. Fri Feb 22 07:52:13 2019 Page 1

ID:_YsKd95knv21l1np5yhk1ZySw5f-v2YLwvZ1O46d7p6AUfAlrFyj9nCGth0GkFGKavzifo0

Scale = 1:46.5

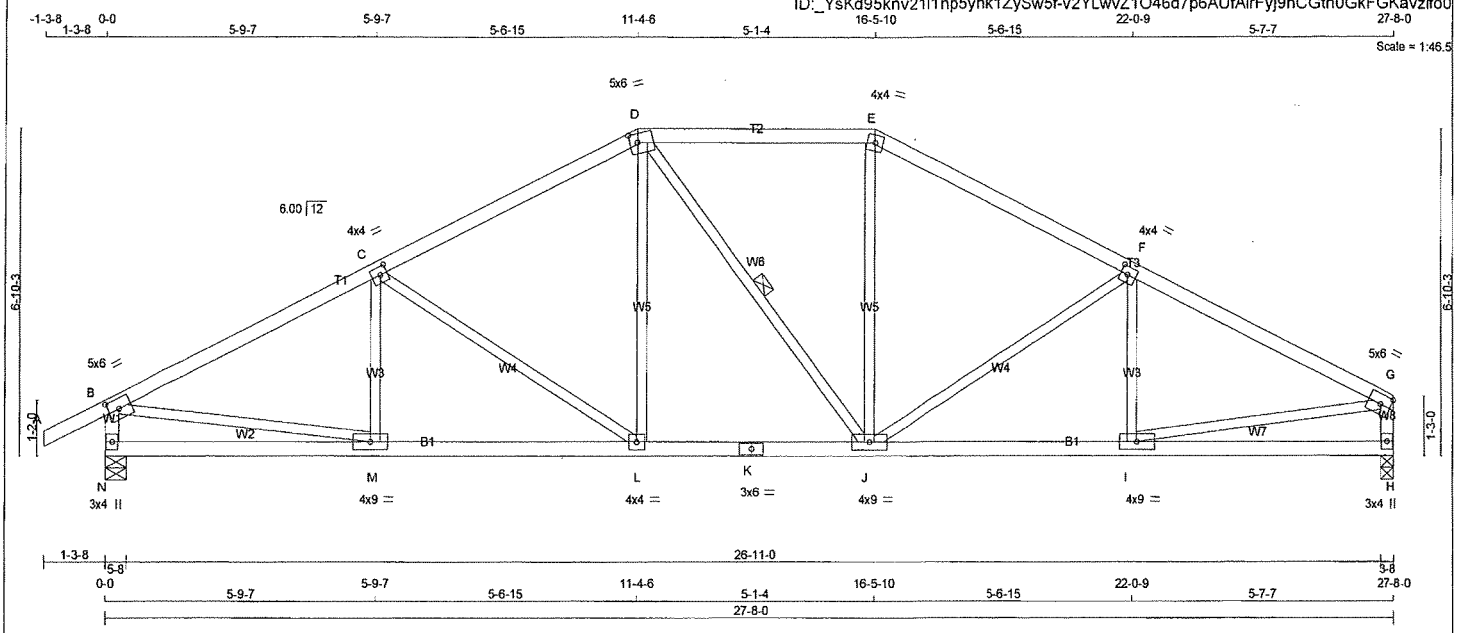


TOTAL WEIGHT = 111 lb

[M][F]

**LUMBER**

N. L. G. A. RULES

| CHORDS | SIZE | | LUMBER | DESCR. |
|---|---|---|---|---|
| A - D | 2x4 | DRY | No.2 | SPF |
| D - E | 2x4 | DRY | No.2 | SPF |
| E - G | 2x4 | DRY | No.2 | SPF |
| N - B | 2x4 | DRY | No.2 | SPF |
| H - G | 2x4 | DRY | No.2 | SPF |
| N - K | 2x4 | DRY | No.2 | SPF |
| K - H | 2x4 | DRY | No.2 | SPF |
| ALL WEBS EXCEPT | 2x3 | DRY | No.2 | SPF |

DRY: SEASONED LUMBER.

**PLATES (table is in inches)**

| JT | TYPE | PLATES | W | LEN | Y | X |
|---|---|---|---|---|---|---|
| B | TMVW-t | MT20 | 5.0 | 6.0 | 2.50 | 2.75 |
| C | TMWW-t | MT20 | 4.0 | 4.0 | 2.00 | 1.75 |
| D | TTWW-m | MT20 | 5.0 | 6.0 | 2.25 | 2.00 |
| E | TTW-m | MT20 | 4.0 | 4.0 | | |
| F | TMWW-t | MT20 | 4.0 | 4.0 | 2.00 | 1.75 |
| G | TMVW-t | MT20 | 5.0 | 6.0 | | Edge |
| H | BMV1+p | MT20 | 3.0 | 4.0 | | |
| I | BMWW-t | MT20 | 4.0 | 9.0 | | |
| J | BMWWW-t | MT20 | 4.0 | 9.0 | | |
| K | BS-t | MT20 | 3.0 | 6.0 | | |
| L | BMWW-t | MT20 | 4.0 | 4.0 | | |
| M | BMWW-t | MT20 | 4.0 | 9.0 | | |
| N | BMV1+p | MT20 | 3.0 | 4.0 | | |

Edge - INDICATES REFERENCE CORNER OF PLATE TOUCHES EDGE OF CHORD.

**DIMENSIONS, SUPPORTS AND LOADINGS SPECIFIED BY FABRICATOR TO BE VERIFIED BY BUILDING DESIGNER**

**BEARINGS**

| JT | FACTORED GROSS REACTION VERT | HORZ | MAXIMUM FACTORED GROSS REACTION DOWN | HORZ | UPLIFT | INPUT BRG IN-SX | REQRD BRG IN-SX |
|---|---|---|---|---|---|---|---|
| N | 1727 | 0 | 1727 | 0 | 0 | 5-8 | 5-8 |
| H | 1621 | 0 | 1621 | 0 | 0 | 3-8 | 3-8 |

**UNFACTORED REACTIONS**

| JT | 1ST LCASE COMBINED | MAX /MIN. COMPONENT REACTIONS SNOW | LIVE | PERM.LIVE | WIND | DEAD | SOIL |
|---|---|---|---|---|---|---|---|
| N | 1312 | 635 / 0 | 291 / 0 | 0 / 0 | 0 / 0 | 387 / 0 | 0 / 0 |
| H | 1239 | 578 / 0 | 291 / 0 | 0 / 0 | 0 / 0 | 371 / 0 | 0 / 0 |

BEARING MATERIAL TO BE SPF NO.2 OR BETTER AT JOINT(S) N, H

**BRACING**

TOP CHORD TO BE SHEATHED OR MAX. PURLIN SPACING = 4.14 FT.
MAX. UNBRACED BOTTOM CHORD LENGTH = 10.00 FT OR RIGID CEILING DIRECTLY APPLIED.

ALL PITCH BREAKS AND PERIMETER CORNER JOINTS MUST BE LATERALLY RESTRAINED.

1 LATERAL BRACE(S) AT 1/ 2 LENGTH OF D-J.

END VERTICAL(S) MUST BE SHEATHED OR HAVE BRACES AS INDICATED IN THE MAX. UNBRACED LENGTH COLUMN OF THE TABLE BELOW

**LOADING**

TOTAL LOAD CASES: (4)

CHORDS

| MEMB. FR-TO | MAX. FACTORED FORCE (LBS) | FACTORED VERT. LOAD (PLF) FROM | TO | LC1 MAX CSI (LC) | MAX. UNBRAC LENGTH |
|---|---|---|---|---|---|
| A- B | 0 / 24 | -77.7 | -77.7 | 0.10 (1) | 10.00 |
| B- C | -2310 / 0 | -77.7 | -77.7 | 0.41 (1) | 4.14 |
| C- D | -1885 / 0 | -77.7 | -77.7 | 0.37 (1) | 4.53 |
| D- E | -1665 / 0 | -77.7 | -77.7 | 0.30 (1) | 4.84 |
| E- F | -1877 / 0 | -77.7 | -77.7 | 0.36 (1) | 4.56 |
| F- G | -2258 / 0 | -77.7 | -77.7 | 0.39 (1) | 4.20 |
| N- B | -1633 / 0 | 0.0 | 0.0 | 0.16 (1) | 6.48 |
| H- G | -1530 / 0 | 0.0 | 0.0 | 0.16 (1) | 6.65 |
| N- M | 0 / 0 | -39.5 | -39.5 | 0.24 (3) | 10.00 |
| M- L | 0 / 2086 | -39.5 | -39.5 | 0.52 (2) | 10.00 |
| L- K | 0 / 1672 | -39.5 | -39.5 | 0.40 (2) | 10.00 |
| K- J | 0 / 1672 | -39.5 | -39.5 | 0.40 (2) | 10.00 |
| J- I | 0 / 2040 | -39.5 | -39.5 | 0.50 (2) | 10.00 |
| I- H | 0 / 0 | -39.5 | -39.5 | 0.23 (3) | 10.00 |

WEBS

| MEMB. FR-TO | MAX. FACTORED FORCE (LBS) | MAX CSI (LC) |
|---|---|---|
| M- C | -56 / 155 | 0.04 (3) |
| C- L | -506 / 0 | 0.44 (1) |
| L- D | 0 / 504 | 0.11 (2) |
| D- J | -11 / 0 | 0.00 (1) |
| J- E | 0 / 493 | 0.11 (2) |
| J- F | -458 / 0 | 0.40 (1) |
| I- F | -95 / 130 | 0.03 (3) |
| B- M | 0 / 2109 | 0.47 (1) |
| I- G | 0 / 2068 | 0.47 (1) |

LICENSED PROFESSIONAL ENGINEER
02/22/19
M. J. G. ALVES
100009
PROVINCE OF ONTARIO

**DESIGN CRITERIA**

SPECIFIED LOADS:

| | | | | |
|---|---|---|---|---|
| TOP CH. | LL | = | 20.9 | PSF |
| | DL | = | 6.0 | PSF |
| BOT CH. | LL | = | 10.5 | PSF |
| | DL | = | 7.4 | PSF |
| TOTAL LOAD | | = | 44.8 | PSF |

**SPACING = 24.0 IN. C/C**

LOADING IN FLAT SECTION BASED ON A SLOPE OF 2.00/12 MINIMUM

THIS TRUSS IS DESIGNED FOR RESIDENTIAL OR SMALL BUILDING REQUIREMENTS OF PART 9, NBCC 2010, NBCC 2015

THIS DESIGN COMPLIES WITH:
- PART 9 OF BCBC 2018 , OBC 2012
- CSA 086-09, CSA 086-14
- TPIC 2011, TPIC 2014

(60 % OF 20.9 P.S.F. G.S.L. PLUS 8.4 P.S.F. RAIN LOAD) EQUALS 20.9 P.S.F. SPECIFIED ROOF LIVE LOAD

ALLOWABLE DEFL.(LL)= L/360 (0.92")
CALCULATED VERT. DEFL.(LL) = L/ 999 (0.09")
ALLOWABLE DEFL.(TL)= L/360 (0.92")
CALCULATED VERT. DEFL.(TL) = L/ 999 (0.16")

CSI: TC=0.41/1.00 (B-C:1) , BC=0.52/1.00 (L-M:2) , WB=0.47/1.00 (B-M:1) , SSI=0.19/1.00 (B-C:1)

DOL LUMBER=1.00 NAIL=1.00 LS BEND=1.10 COMP=1.10 SHEAR=1.10 TENS= 1.10

COMPANION LIVE LOAD FACTOR = 1.00

TRUSS PLATE MANUFACTURER IS NOT RESPONSIBLE FOR QUALITY CONTROL IN THE TRUSS MANUFACTURING PLANT .

NAIL VALUES

| PLATE | GRIP(DRY) (PSI) MAX | MIN | SHEAR (PLI) MAX | MIN | SECTION (PLI) MAX | MIN |
|---|---|---|---|---|---|---|
| MT20 | 618 | 354 | 1667 | 788 | 1987 | 1656 |

PLATE PLACEMENT TOL. = 0.250 inches

PLATE ROTATION TOL. = 5.0 Deg.

JSI GRIP= 0.88 (E) (INPUT = 0.90 )
JSI METAL= 0.61 (B) (INPUT = 1.00 )

DWG NO. TAM T19041 06
STRUCTURAL
COMPONENT ONLY

| JOB NAME | TRUSS NAME | QUANTITY | PLY | JOB DESC. | DRWG NO. |
|---|---|---|---|---|---|
| 401458 | T27 | 1 | 2 | CONDO BLOCK 1UNITS 1- 3<br>TRUSS DESC. | |

Tamarack Roof Truss, Burlington

Version 8.230 S Nov 17 2018 MiTek Industries, Inc. Fri Feb 22 07:52:15 2019 Page 1

ID: YsKd95knv21i1np5yhk1ZySw5f-rRf6LbaHvhMLM7GZc4CDwg28Fbz3LewZBZlReozifo

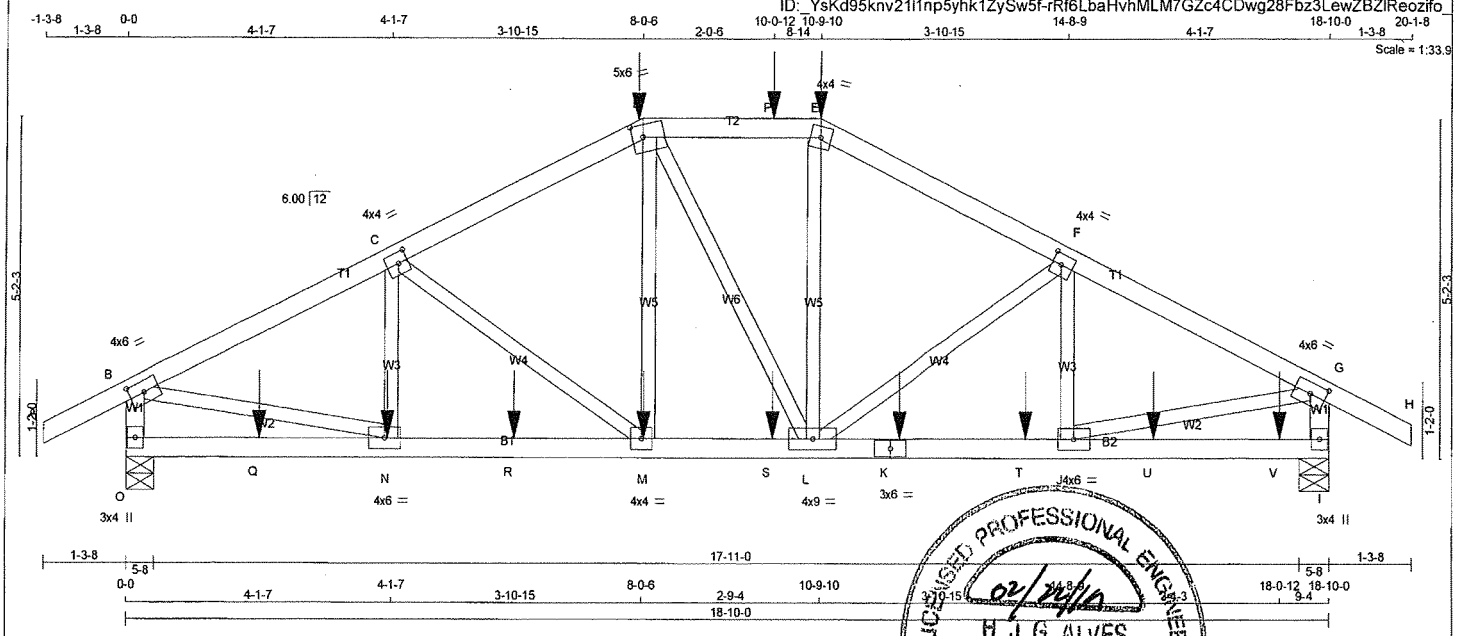


**LUMBER**

N. L. G. A. RULES

| CHORDS | SIZE | | LUMBER | DESCR. |
|---|---|---|---|---|
| A - D | 2x4 | DRY | No.2 | SPF |
| D - E | 2x4 | DRY | No.2 | SPF |
| E - H | 2x4 | DRY | No.2 | SPF |
| O - B | 2x4 | DRY | No.2 | SPF |
| I - G | 2x4 | DRY | No.2 | SPF |
| O - K | 2x4 | DRY | No.2 | SPF |
| K - I | 2x4 | DRY | No.2 | SPF |
| ALL WEBS EXCEPT | 2x3 | DRY | No.2 | SPF |

DRY: SEASONED LUMBER.

DESIGN CONSISTS OF 2 TRUSSES BUILT SEPARATELY THEN FASTENED TOGETHER AS FOLLOWS:

| CHORDS | #ROWS | SURFACE SPACING (IN) | LOAD(PLF) |
|---|---|---|---|
| TOP CHORDS : (0.122"X3") SPIRAL NAILS | | | |
| A- D | 1 | 12 | SIDE(61.0) |
| D- E | 1 | 12 | SIDE(61.0) |
| E- H | 1 | 12 | SIDE(61.0) |
| O- B | 1 | 12 | TOP |
| I- G | 1 | 12 | TOP |
| BOTTOM CHORDS : (0.122"X3") SPIRAL NAILS | | | |
| O- K | 1 | 12 | SIDE(61.0) |
| K- I | 1 | 12 | SIDE(0.0) |
| WEBS : (0.122"X3") SPIRAL NAILS | | | |
| 2x3 | 1 | 6 | |

NAILS TO BE DRIVEN FROM ONE SIDE ONLY.

GIRDER NAILING ASSUMES NAILED HANGERS ARE FASTENED WITH MIN. 3-0 INCH NAILS.

TOP - COMPONENTS ARE LOADED FROM THE TOP AND MUST BE PLACED ON TOP EDGE OF ALL PLIES FOR THE LOAD TO BE TRANSFERRED TO EACH PLY.

SIDE - PLF SHOWN IS THE EQUIVALENT UDL APPLIED TO ONE SIDE THAT THE CORRESPONDING NAILING PATTERN SHALL BE CAPABLE OF TRANSFERING. REMAINING PLF MUST BE APPLIED ON THE OPPOSITE SIDE OR ON THE TOP.

**PLATES (table is in inches)**

| JT | TYPE | PLATES | W | LEN | Y | X |
|---|---|---|---|---|---|---|
| B | TMVW-t | MT20 | 4.0 | 6.0 | 2.00 | 3.00 |
| C | TMWW-t | MT20 | 4.0 | 4.0 | 2.00 | 1.75 |
| D | TTWW-m | MT20 | 5.0 | 6.0 | 2.25 | 2.00 |
| E | TTW-m | MT20 | 4.0 | 4.0 | | |
| F | TMWW-t | MT20 | 4.0 | 4.0 | 2.00 | 1.75 |
| G | TMVW-t | MT20 | 4.0 | 6.0 | 2.00 | 3.00 |
| I | BMV1+p | MT20 | 3.0 | 4.0 | | |
| J | BMWW-t | MT20 | 4.0 | 6.0 | | |
| K | BS-t | MT20 | 3.0 | 6.0 | | |
| L | BMWWW-t | MT20 | 4.0 | 9.0 | | |
| M | BMWW-t | MT20 | 4.0 | 4.0 | | |
| N | BMWW-t | MT20 | 4.0 | 6.0 | | |
| O | BMV1+p | MT20 | 3.0 | 4.0 | | |

**DIMENSIONS, SUPPORTS AND LOADINGS SPECIFIED BY FABRICATOR TO BE VERIFIED BY BUILDING DESIGNER**

**BEARINGS**

| JT | FACTORED GROSS REACTION VERT | HORZ | MAXIMUM FACTORED GROSS REACTION DOWN | HORZ | UPLIFT | INPUT BRG IN-SX | REQRD BRG IN-SX |
|---|---|---|---|---|---|---|---|
| O | 1753 | 0 | 1753 | 0 | 0 | 5-8 | 5-8 |
| I | 1774 | 0 | 1774 | 0 | 0 | 5-8 | 5-8 |

**UNFACTORED REACTIONS**

| JT | 1ST LCASE COMBINED | MAX./MIN. COMPONENT REACTIONS SNOW | LIVE | PERM.LIVE | WIND | DEAD | SOIL |
|---|---|---|---|---|---|---|---|
| O | 1324 | 664 / 0 | 273 / 0 | 0 / 0 | 0 / 0 | 388 / 0 | 0 / 0 |
| I | 1344 | 662 / 0 | 286 / 0 | 0 / 0 | 0 / 0 | 396 / 0 | 0 / 0 |

BEARING MATERIAL TO BE SPF NO.2 OR BETTER AT JOINT(S) O, I

**BRACING**

TOP CHORD TO BE SHEATHED OR MAX. PURLIN SPACING = 5.83 FT.
MAX. UNBRACED BOTTOM CHORD LENGTH = 10.00 FT OR RIGID CEILING DIRECTLY APPLIED.

ALL PITCH BREAKS AND PERIMETER CORNER JOINTS MUST BE LATERALLY RESTRAINED.

**LOADING**

TOTAL LOAD CASES: (4)

CHORDS

| MEMB. FR-TO | MAX. FACTORED FORCE (LBS) | FACTORED VERT. LOAD (PLF) FROM | TO | LC1 MAX CSI (LC) | MAX. UNBRAC LENGTH |
|---|---|---|---|---|---|
| A- B | 0 / 24 | -77.7 | -77.7 | 0.06 (1) | 10.00 |
| B- C | -2254 / 0 | -77.7 | -77.7 | 0.12 (1) | 5.83 |
| C- D | -2094 / 0 | -77.7 | -77.7 | 0.12 (1) | 5.99 |
| D- P | -1860 / 0 | -77.7 | -77.7 | 0.08 (1) | 6.25 |
| P- E | -1860 / 0 | -77.7 | -77.7 | 0.08 (1) | 6.25 |
| E- F | -2088 / 0 | -77.7 | -77.7 | 0.12 (1) | 6.00 |
| F- G | -2251 / 0 | -77.7 | -77.7 | 0.12 (1) | 5.83 |
| G- H | 0 / 24 | -77.7 | -77.7 | 0.06 (1) | 10.00 |
| O- B | -1671 / 0 | 0.0 | 0.0 | 0.09 (1) | 7.81 |
| I- G | -1669 / 0 | 0.0 | 0.0 | 0.09 (1) | 7.81 |
| O- Q | 0 / 0 | -39.5 | -39.5 | 0.08 (3) | 10.00 |
| Q- N | 0 / 0 | -39.5 | -39.5 | 0.08 (3) | 10.00 |
| N- R | 0 / 2029 | -39.5 | -39.5 | 0.23 (2) | 10.00 |
| R- M | 0 / 2029 | -39.5 | -39.5 | 0.23 (2) | 10.00 |
| M- S | 0 / 1864 | -39.5 | -39.5 | 0.20 (1) | 10.00 |
| S- L | 0 / 1864 | -39.5 | -39.5 | 0.20 (1) | 10.00 |
| L- K | 0 / 2026 | -39.5 | -39.5 | 0.24 (2) | 10.00 |
| K- T | 0 / 2026 | -39.5 | -39.5 | 0.24 (2) | 10.00 |
| T- J | 0 / 2026 | -39.5 | -39.5 | 0.24 (2) | 10.00 |
| J- U | 0 / 0 | -39.5 | -39.5 | 0.09 (3) | 10.00 |
| U- V | 0 / 0 | -39.5 | -39.5 | 0.09 (3) | 10.00 |
| V- I | 0 / 0 | -39.5 | -39.5 | 0.09 (3) | 10.00 |

WEBS

| MEMB. FR-TO | MAX. FACTORED FORCE (LBS) | MAX CSI (LC) |
|---|---|---|
| N- C | -170 / 109 | 0.02 (1) |
| C- M | -224 / 0 | 0.05 (2) |
| M- D | 0 / 352 | 0.04 (2) |
| D- L | -9 / 0 | 0.00 (1) |
| L- E | 0 / 367 | 0.05 (2) |
| L- F | -226 / 0 | 0.05 (2) |
| J- F | -168 / 111 | 0.02 (1) |
| B- N | 0 / 2072 | 0.26 (1) |
| J- G | 0 / 2069 | 0.26 (1) |

DWG NO. TAM T1904107
STRUCTURAL
COMPONENT ONLY
1/2

FACTORED CONCENTRATED LOADS (LBS)

| JT | LOC. | LC1 | MAX- | MAX+ | FACE | DIR. | TYPE | HEEL | CONN. |
|---|---|---|---|---|---|---|---|---|---|
| D | 8-0-6 | -69 | -77 | --- | FRONT | VERT | DEAD | --- | --- |
| D | 8-0-6 | -54 | -54 | --- | BACK | VERT | TOTAL | --- | --- |
| D | 8-0-6 | -278 | -278 | --- | FRONT | VERT | SNOW | --- | --- |
| E | 10-9-10 | -69 | -77 | --- | FRONT | VERT | DEAD | --- | --- |
| E | 10-9-10 | -278 | -278 | --- | FRONT | VERT | SNOW | --- | --- |
| K | 12-0-12 | -34 | -42 | --- | BACK | VERT | TOTAL | --- | --- |
| M | 8-0-12 | -34 | -42 | --- | BACK | VERT | TOTAL | --- | --- |
| N | 4-0-12 | -34 | -42 | --- | BACK | VERT | TOTAL | --- | --- |
| P | 10-0-12 | -56 | -56 | --- | BACK | VERT | TOTAL | --- | --- |
| Q | 2-0-12 | -34 | -42 | --- | BACK | VERT | TOTAL | --- | --- |
| R | 6-0-12 | -34 | -42 | --- | BACK | VERT | TOTAL | --- | --- |
| S | 10-0-12 | -34 | -42 | --- | BACK | VERT | TOTAL | --- | --- |
| T | 14-0-12 | -34 | -42 | --- | BACK | VERT | TOTAL | --- | --- |
| U | 16-0-12 | -34 | -42 | --- | BACK | VERT | TOTAL | --- | --- |

LICENSED PROFESSIONAL ENGINEER
02/22/19
H. J. G. ALVES
100009974
PROVINCE OF ONTARIO

**DESIGN CRITERIA**

*** SPECIAL LOADS ANALYSIS ***
GEOMETRY AND/OR BASIC LOADS CHANGED BY USER
LOADS WERE DERIVED FROM USER INPUT
NO FURTHER MODIFICATIONS WERE MADE

SPECIFIED LOADS:

| | | | | |
|---|---|---|---|---|
| TOP CH. | LL | = | 20.9 | PSF |
| | DL | = | 6.0 | PSF |
| BOT CH. | LL | = | 10.5 | PSF |
| | DL | = | 7.4 | PSF |
| TOTAL LOAD | | = | 44.8 | PSF |

**SPACING = 24.0 IN. C/C**

LOADING IN FLAT SECTION BASED ON A SLOPE OF 2.00/12 MINIMUM

*** NON STANDARD GIRDER ***
ADDT'L USER-DEFINED LOADS APPLIED TO ALL LOAD CASES.

THIS TRUSS IS DESIGNED FOR RESIDENTIAL OR SMALL BUILDING REQUIREMENTS OF PART 9, NBCC 2010, NBCC 2015

THIS DESIGN COMPLIES WITH:
- PART 9 OF BCBC 2018 , OBC 2012
- CSA 086-09, CSA 086-14
- TPIC 2011, TPIC 2014

(60 % OF 20.9 P.S.F. G.S.L. PLUS 8.4 P.S.F. RAIN LOAD) EQUALS 20.9 P.S.F. SPECIFIED ROOF LIVE LOAD

ALLOWABLE DEFL.(LL)= L/360 (0.63")
CALCULATED VERT. DEFL.(LL) = L/ 999 (0.03")
ALLOWABLE DEFL.(TL)= L/360 (0.63")
CALCULATED VERT. DEFL.(TL) = L/ 999 (0.05")

CSI: TC=0.12/1.00 (B-C:1) , BC=0.24/1.00 (J-L:2) , WB=0.26/1.00 (B-N:1) , SSI=0.07/1.00 (I-J:3)

DOL LUMBER=1.00 NAIL=1.00 LS BEND=1.00 COMP=1.00 SHEAR=1.00 TENS= 1.00

COMPANION LIVE LOAD FACTOR = 1.00

TRUSS PLATE MANUFACTURER IS NOT RESPONSIBLE FOR QUALITY CONTROL IN THE TRUSS MANUFACTURING PLANT .

NAIL VALUES

| PLATE | GRIP(DRY) (PSI) MAX | MIN | SHEAR (PLI) MAX | MIN | SECTION (PLI) MAX | MIN |
|---|---|---|---|---|---|---|
| MT20 | 618 | 354 | 1667 | 788 | 1987 | 1656 |

PLATE PLACEMENT TOL. = 0.250 inches

PLATE ROTATION TOL. = 5.0 Deg.

JSI GRIP= 0.68 (N) (INPUT = 0.90 )
JSI METAL= 0.34 (K) (INPUT = 1.00 )

CONTINUED ON PAGE 2

| JOB NAME | TRUSS NAME | QUANTITY | PLY | JOB DESC. CONDO BLOCK 1UNITS 1- 3 | DRWG NO. |
|---|---|---|---|---|---|
| 401458 | T27 | 1 | 2 | TRUSS DESC. | |



FACTORED CONCENTRATED LOADS (LBS)

| JT | LOC. | LC1 | MAX- | MAX+ | FACE | DIR. | TYPE | HEEL | CONN. |
|---|---|---|---|---|---|---|---|---|---|
| V | 18-0-12 | -38 | -48 | — | BACK | VERT | TOTAL | — | — |

LICENSED PROFESSIONAL ENGINEER
02/22/19
H. J. G ALVES
100009034
PROVINCE OF ONTARIO

DWG NO. TAM T190 4107
STRUCTURAL
COMPONENT ONLY

| JOB NAME | TRUSS NAME | QUANTITY | PLY | JOB DESC. | DRWG NO. |
|---|---|---|---|---|---|
| 401458 | G28 | 1 | 1 | CONDO BLOCK 1UNITS 1- 3<br>TRUSS DESC. | |

Tamarack Roof Truss, Burlington

Version 8.230 S Nov 17 2018 MiTek Industries, Inc. Fri Feb 22 07:51:39 2019 Page 1
ID:_YsKd95knv21l1np5yhk1ZySw5f-uVUVnH9iOdqS2bWeVWZnT4Y_Y4j_vQ1Gvy1XNtzifoY

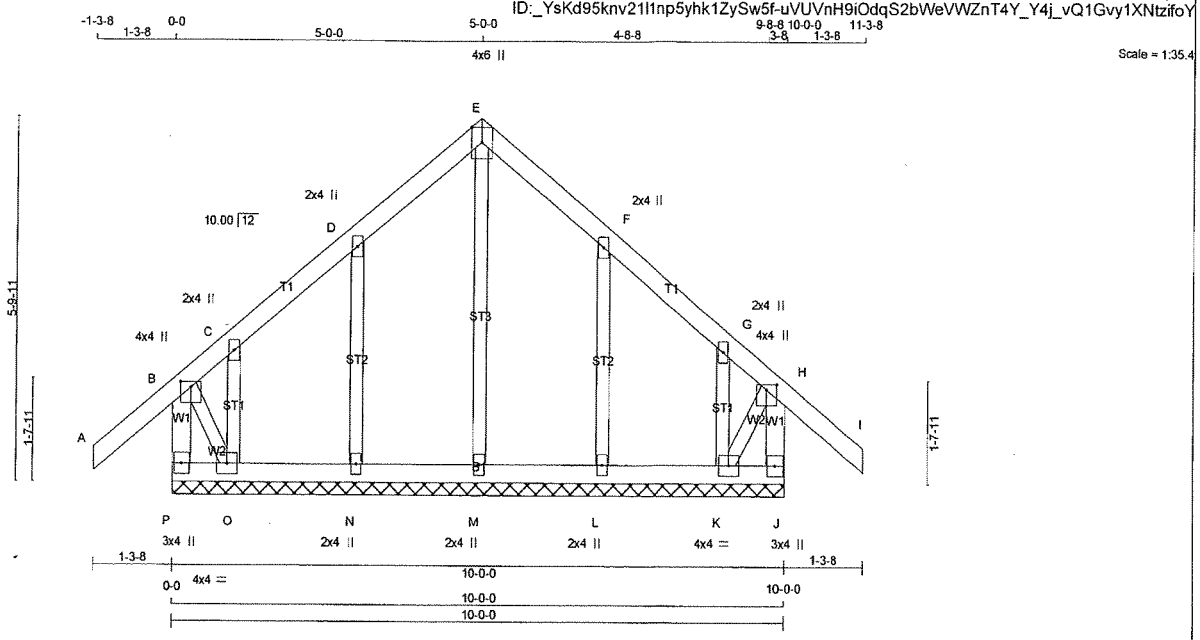


TOTAL WEIGHT = 49 lb

**LUMBER**
N. L. G. A. RULES

| CHORDS | SIZE | | LUMBER | DESCR. |
|---|---|---|---|---|
| P - B | 2x4 | DRY | No.2 | SPF |
| A - E | 2x4 | DRY | No.2 | SPF |
| E - I | 2x4 | DRY | No.2 | SPF |
| J - H | 2x4 | DRY | No.2 | SPF |
| P - J | 2x4 | DRY | No.2 | SPF |
| ALL WEBS | 2x3 | DRY | No.2 | SPF |
| ALL GABLE WEBS | 2x3 | DRY | No.2 | SPF |

DRY: SEASONED LUMBER.

GABLE STUDS SPACED AT 2-0-0 OC.

**PLATES (table is in inches)**

| JT | TYPE | PLATES | W | LEN | Y | X |
|---|---|---|---|---|---|---|
| B | TMVW+p | MT20 | 4.0 | 4.0 | 1.00 | 2.00 |
| C, D, F, G | | | | | | |
| C | TMW+w | MT20 | 2.0 | 4.0 | | |
| E | TTW+p | MT20 | 4.0 | 6.0 | Edge | |
| H | TMVW+p | MT20 | 4.0 | 4.0 | 1.00 | 2.00 |
| J | BMV1+p | MT20 | 3.0 | 4.0 | | |
| K | BMWW1-t | MT20 | 4.0 | 4.0 | | |
| L, M, N | | | | | | |
| L | BMW1+w | MT20 | 2.0 | 4.0 | | |
| O | BMWW1-t | MT20 | 4.0 | 4.0 | | |
| P | BMV1+p | MT20 | 3.0 | 4.0 | | |

Edge - INDICATES REFERENCE CORNER OF PLATE TOUCHES EDGE OF CHORD.

**DIMENSIONS, SUPPORTS AND LOADINGS SPECIFIED BY FABRICATOR TO BE VERIFIED BY BUILDING DESIGNER**

**BEARINGS**

THIS TRUSS DESIGNED FOR CONTINUOUS BEARINGS.

THIS TRUSS REQUIRES RIGID SHEATHING ON EXPOSED FACE.

BEARING MATERIAL TO BE SPF NO.2 OR BETTER AT JOINT(S)

**BRACING**
TOP CHORD TO BE SHEATHED OR MAX. PURLIN SPACING = 6.25 FT.
MAX. UNBRACED BOTTOM CHORD LENGTH = 10.00 FT OR RIGID CEILING DIRECTLY APPLIED.

ALL PITCH BREAKS AND PERIMETER CORNER JOINTS MUST BE LATERALLY RESTRAINED.

**LOADING**
TOTAL LOAD CASES: (4)

CHORDS

| MEMB. FR-TO | MAX. FACTORED FORCE (LBS) | FACTORED VERT. LOAD (PLF) FROM | TO | LC1 CSI (LC) | MAX UNBRAC LENGTH |
|---|---|---|---|---|---|
| P- B | -229 / 0 | 0.0 | 0.0 | 0.02 (1) | 7.81 |
| A- B | 0 / 34 | -77.7 | -77.7 | 0.11 (1) | 10.00 |
| B- C | -55 / 0 | -77.7 | -77.7 | 0.10 (1) | 6.25 |
| C- D | 0 / 2 | -77.7 | -77.7 | 0.05 (1) | 10.00 |
| D- E | -12 / 0 | -77.7 | -77.7 | 0.05 (1) | 6.25 |
| E- F | -12 / 0 | -77.7 | -77.7 | 0.05 (1) | 6.25 |
| F- G | 0 / 2 | -77.7 | -77.7 | 0.05 (1) | 10.00 |
| G- H | -55 / 0 | -77.7 | -77.7 | 0.10 (1) | 6.25 |
| H- I | 0 / 34 | -77.7 | -77.7 | 0.11 (1) | 10.00 |
| J- H | -229 / 0 | 0.0 | 0.0 | 0.02 (1) | 7.81 |
| P- O | 0 / 0 | -39.5 | -39.5 | 0.02 (3) | 10.00 |
| O- N | 0 / 5 | -39.5 | -39.5 | 0.03 (3) | 10.00 |
| N- M | 0 / 0 | -39.5 | -39.5 | 0.03 (3) | 10.00 |
| M- L | 0 / 0 | -39.5 | -39.5 | 0.03 (3) | 10.00 |
| L- K | 0 / 5 | -39.5 | -39.5 | 0.03 (3) | 10.00 |
| K- J | 0 / 0 | -39.5 | -39.5 | 0.02 (3) | 10.00 |

WEBS

| MEMB. FR-TO | MAX. FACTORED FORCE (LBS) | MAX CSI (LC) |
|---|---|---|
| M- E | -127 / 0 | 0.06 (1) |
| N- D | -187 / 0 | 0.05 (1) |
| O- C | -26 / 0 | 0.00 (1) |
| L- F | -187 / 0 | 0.05 (1) |
| K- G | -26 / 0 | 0.00 (1) |
| B- O | 0 / 10 | 0.00 (1) |
| K- H | 0 / 10 | 0.00 (1) |

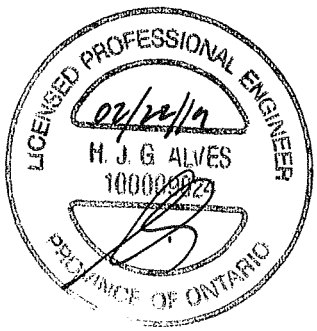


**DESIGN CRITERIA**

SPECIFIED LOADS:

| | | | | |
|---|---|---|---|---|
| TOP CH. | LL | = | 20.9 | PSF |
| | DL | = | 6.0 | PSF |
| BOT CH. | LL | = | 10.5 | PSF |
| | DL | = | 7.4 | PSF |
| TOTAL LOAD | | = | 44.8 | PSF |

**SPACING = 24.0 IN. C/C**

THIS TRUSS IS DESIGNED FOR RESIDENTIAL OR SMALL BUILDING REQUIREMENTS OF PART 9, NBCC 2010, NBCC 2015

THIS DESIGN COMPLIES WITH:
- PART 9 OF BCBC 2018 , OBC 2012
- CSA 086-09, CSA 086-14
- TPIC 2011, TPIC 2014

DESIGN ASSUMPTIONS
-OVERHANG NOT TO BE ALTERED OR CUT OFF.

(60 % OF 20.9 P.S.F. G.S.L. PLUS 8.4 P.S.F. RAIN LOAD) EQUALS 20.9 P.S.F. SPECIFIED ROOF LIVE LOAD

CSI: TC=0.11/1.00 (A-B:1) , BC=0.03/1.00 (N-O:3) , WB=0.06/1.00 (E-M:1) , SSI=0.06/1.00 (B-C:1)

DOL LUMBER=1.00 NAIL=1.00 LS BEND=1.10 COMP=1.10 SHEAR=1.10 TENS= 1.10

COMPANION LIVE LOAD FACTOR = 1.00

TRUSS PLATE MANUFACTURER IS NOT RESPONSIBLE FOR QUALITY CONTROL IN THE TRUSS MANUFACTURING PLANT .

NAIL VALUES

| PLATE | GRIP(DRY) (PSI) MAX | MIN | SHEAR (PLI) MAX | MIN | SECTION (PLI) MAX | MIN |
|---|---|---|---|---|---|---|
| MT20 | 618 | 354 | 1667 | 788 | 1987 | 1656 |

PLATE PLACEMENT TOL. = 0.250 inches

PLATE ROTATION TOL. = 5.0 Deg.

JSI GRIP= 0.17 (B) (INPUT = 0.90 )
JSI METAL= 0.10 (D) (INPUT = 1.00 )

DWG NO. TAM 719041 08
STRUCTURAL
COMPONENT ONLY

| JOB NAME | TRUSS NAME | QUANTITY | PLY | JOB DESC. | DRWG NO. |
|---|---|---|---|---|---|
| 401458 | T31C | 1 | 2 | CONDO BLOCK 1UNITS 1- 3<br>TRUSS DESC. | |

Tamarack Roof Truss, Burlington

Version 8.230 S Nov 17 2018 MiTek Industries, Inc. Fri Feb 22 07:52:16 2019 Page 1

ID:_YsKd95knv21I1np5yhk1ZySw5f-JdDUYxbvg?UC_Grl9nkSTtaI5?A649AjQDV_9Ezifnz

Scale = 1:37.3

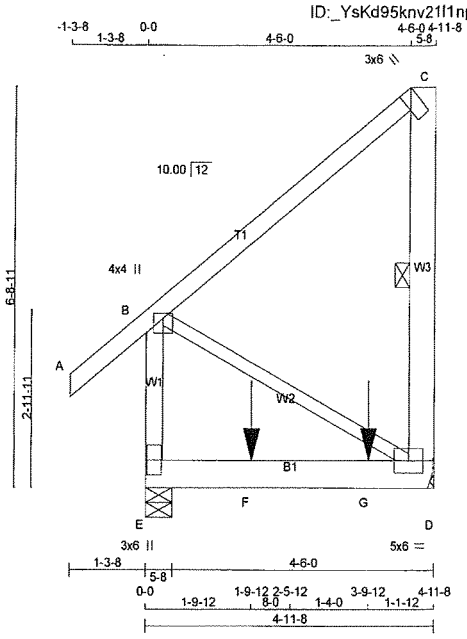


TOTAL WEIGHT = 2 X 36 = 71 lb

[M]

**LUMBER**

N. L. G. A. RULES

| CHORDS | SIZE | | LUMBER | DESCR. |
|---|---|---|---|---|
| A - C | 2x4 | DRY | No.2 | SPF |
| D - C | 2x6 | DRY | No.2 | SPF |
| E - B | 2x4 | DRY | No.2 | SPF |
| E - D | 2x6 | DRY | No.2 | SPF |
| ALL WEBS | 2x3 | DRY | No.2 | SPF |

DRY: SEASONED LUMBER.

DESIGN CONSISTS OF 2 TRUSSES BUILT SEPARATELY THEN FASTENED TOGETHER AS FOLLOWS:

| CHORDS | #ROWS | SURFACE SPACING (IN) | LOAD(PLF) |
|---|---|---|---|
| TOP CHORDS : (0.122"X3") SPIRAL NAILS | | | |
| A- C | 1 | 12 | TOP |
| E- B | 1 | 12 | TOP |
| C- D | 2 | 12 | TOP |
| BOTTOM CHORDS : (0.122"X3") SPIRAL NAILS | | | |
| E- D | 2 | 12 | SIDE(0.0) |
| WEBS : (0.122"X3") SPIRAL NAILS | | | |
| 2x3 | 1 | 6 | |

NAILS TO BE DRIVEN FROM ONE SIDE ONLY.

GIRDER NAILING ASSUMES NAILED HANGERS ARE FASTENED WITH MIN. 3-0 INCH NAILS.

TOP - COMPONENTS ARE LOADED FROM THE TOP AND MUST BE PLACED ON TOP EDGE OF ALL PLIES FOR THE LOAD TO BE TRANSFERRED TO EACH PLY.

SIDE - PLF SHOWN IS THE EQUIVALENT UDL APPLIED TO ONE SIDE THAT THE CORRESPONDING NAILING PATTERN SHALL BE CAPABLE OF TRANSFERING. REMAINING PLF MUST BE APPLIED ON THE OPPOSITE SIDE OR ON THE TOP.

**PLATES (table is in inches)**

| JT | TYPE | PLATES | W | LEN | Y | X |
|---|---|---|---|---|---|---|
| B | TMVW+p | MT20 | 4.0 | 4.0 | 1.00 | 2.00 |
| C | TVM+I | MT20 | 3.0 | 6.0 | Edge | |
| D | BMVW1-t | MT20 | 5.0 | 6.0 | | |
| E | BMV1+p | MT20 | 3.0 | 6.0 | | |

Edge - INDICATES REFERENCE CORNER OF PLATE TOUCHES EDGE OF CHORD.

**DIMENSIONS, SUPPORTS AND LOADINGS SPECIFIED BY FABRICATOR TO BE VERIFIED BY BUILDING DESIGNER**

**BEARINGS**

| JT | FACTORED GROSS REACTION VERT | HORZ | MAXIMUM FACTORED GROSS REACTION DOWN | HORZ | UPLIFT | INPUT BRG IN-SX | REQRD BRG IN-SX |
|---|---|---|---|---|---|---|---|
| D | 1712 | 0 | 1712 | 0 | 0 | MECHANICAL | |
| E | 1482 | 0 | 1482 | 0 | 0 | 5-8 | 5-8 |

A SUITABLE HANGER/MECHANICAL CONNECTION IS REQUIRED AT JOINT D. MINIMUM BEARING LENGTH AT JOINT D = 1-8.

**UNFACTORED REACTIONS**

MAX./MIN. COMPONENT REACTIONS

| JT | 1ST LCASE COMBINED | SNOW | LIVE | PERM.LIVE | WIND | DEAD | SOIL |
|---|---|---|---|---|---|---|---|
| D | 1294 | 648 / 0 | 269 / 0 | 0 / 0 | 0 / 0 | 376 / 0 | 0 / 0 |
| E | 1114 | 577 / 0 | 218 / 0 | 0 / 0 | 0 / 0 | 319 / 0 | 0 / 0 |

BEARING MATERIAL TO BE SPF NO.2 OR BETTER AT JOINT(S) E

**BRACING**

TOP CHORD TO BE SHEATHED OR MAX. PURLIN SPACING = 10.00 FT.
MAX. UNBRACED BOTTOM CHORD LENGTH = 10.00 FT OR RIGID CEILING DIRECTLY APPLIED.

ALL PITCH BREAKS AND PERIMETER CORNER JOINTS MUST BE LATERALLY RESTRAINED.

1 LATERAL BRACE(S) AT 1/ 2 LENGTH OF C-D.

END VERTICAL(S) MUST BE SHEATHED OR HAVE BRACES AS INDICATED IN THE MAX. UNBRACED LENGTH COLUMN OF THE TABLE BELOW

**LOADING**

TOTAL LOAD CASES: (4)

CHORDS

| MEMB. FR-TO | MAX. FACTORED FORCE (LBS) | FACTORED VERT. LOAD (PLF) FROM | TO | LC1 | MAX CSI (LC) | MAX. UNBRAC LENGTH |
|---|---|---|---|---|---|---|
| A- B | 0 / 34 | -77.7 | -77.7 | 0.06 (1) | 10.00 | |
| B- C | 0 / 0 | -77.7 | -77.7 | 0.18 (1) | 10.00 | |
| D- C | -193 / 0 | 0.0 | 0.0 | 0.01 (1) | 6.25 | |
| E- B | -300 / 0 | 0.0 | 0.0 | 0.02 (1) | 7.81 | |
| E- F | 0 / 0 | -39.5 | -39.5 | 0.76 (1) | 10.00 | |
| F- G | 0 / 0 | -39.5 | -39.5 | 0.76 (1) | 10.00 | |
| G- D | 0 / 0 | -39.5 | -39.5 | 0.76 (1) | 10.00 | |

WEBS

| MEMB. FR-TO | MAX. FACTORED FORCE (LBS) | MAX CSI (LC) |
|---|---|---|
| B- D | 0 / 0 | 0.00 (1) |

FACTORED CONCENTRATED LOADS (LBS)

| JT | LOC. | LC1 | MAX- | MAX+ | FACE | DIR. | TYPE | HEEL | CONN. |
|---|---|---|---|---|---|---|---|---|---|
| F | 1-9-12 | -1253 | -1253 | --- | FRONT | VERT | TOTAL | | |
| G | 3-9-12 | -1253 | -1253 | --- | FRONT | VERT | TOTAL | | |

LICENSED PROFESSIONAL ENGINEER
02/22/19
H. J. G. ALVES
100009054
PROVINCE OF ONTARIO

**DESIGN CRITERIA**

SPECIFIED LOADS:

| | | | | |
|---|---|---|---|---|
| TOP CH. | LL | = | 20.9 | PSF |
| | DL | = | 6.0 | PSF |
| BOT CH. | LL | = | 10.5 | PSF |
| | DL | = | 7.4 | PSF |
| TOTAL LOAD | | = | 44.8 | PSF |

**SPACING = 24.0 IN. C/C**

THIS TRUSS IS DESIGNED FOR RESIDENTIAL OR SMALL BUILDING REQUIREMENTS OF PART 9, NBCC 2010, NBCC 2015

THIS DESIGN COMPLIES WITH:
- PART 9 OF BCBC 2018 , OBC 2012
- CSA 086-09, CSA 086-14
- TPIC 2011, TPIC 2014

(60 % OF 20.9 P.S.F. G.S.L. PLUS 8.4 P.S.F. RAIN LOAD) EQUALS 20.9 P.S.F. SPECIFIED ROOF LIVE LOAD

ALLOWABLE DEFL.(LL)= L/360 (0.19")
CALCULATED VERT. DEFL.(LL) = L/ 843 (0.07")
ALLOWABLE DEFL.(TL)= L/360 (0.19")
CALCULATED VERT. DEFL.(TL) = L/ 475 (0.13")

CSI: TC=0.18/1.00 (B-C:1) , BC=0.76/1.00 (D-E:1) , WB=0.00/1.00 (B-D:1) , SSI=0.50/1.00 (D-E:1)

DOL LUMBER=1.00 NAIL=1.00 LS BEND=1.00 COMP=1.00 SHEAR=1.00 TENS= 1.00

COMPANION LIVE LOAD FACTOR = 1.00

TRUSS PLATE MANUFACTURER IS NOT RESPONSIBLE FOR QUALITY CONTROL IN THE TRUSS MANUFACTURING PLANT .

NAIL VALUES

| PLATE | GRIP(DRY) (PSI) MAX | MIN | SHEAR (PLI) MAX | MIN | SECTION (PLI) MAX | MIN |
|---|---|---|---|---|---|---|
| MT20 | 618 | 354 | 1667 | 788 | 1987 | 1656 |

PLATE PLACEMENT TOL. = 0.250 inches

PLATE ROTATION TOL. = 5.0 Deg.

JSI GRIP= 0.12 (B) (INPUT = 0.90 )
JSI METAL= 0.04 (C) (INPUT = 1.00 )

DWG NO. TAM 71904109
STRUCTURAL
COMPONENT ONLY