It is the builder's complete responsibility to ensure that all plans submitted for approval fully comply with the Architectural Guidelines and all applicable regulations and requirements including zoning provisions and any provisions in the subdivision agreement. The Control Architect is not responsible in any way for examining or approving site (lotting) plans or working drawings with respect to any zoning or building code or permit matter or that any house can be properly built or located on its lot.

This is to certify that these plans comply with the applicable Architectural Design Guidelines approved by the Town of BRADFORD / WEST GWILLIMBURY.

ARCHITECTURAL REVIEW & APPROVAL
JAN 30 2018
John G. Williams Limited, Architect

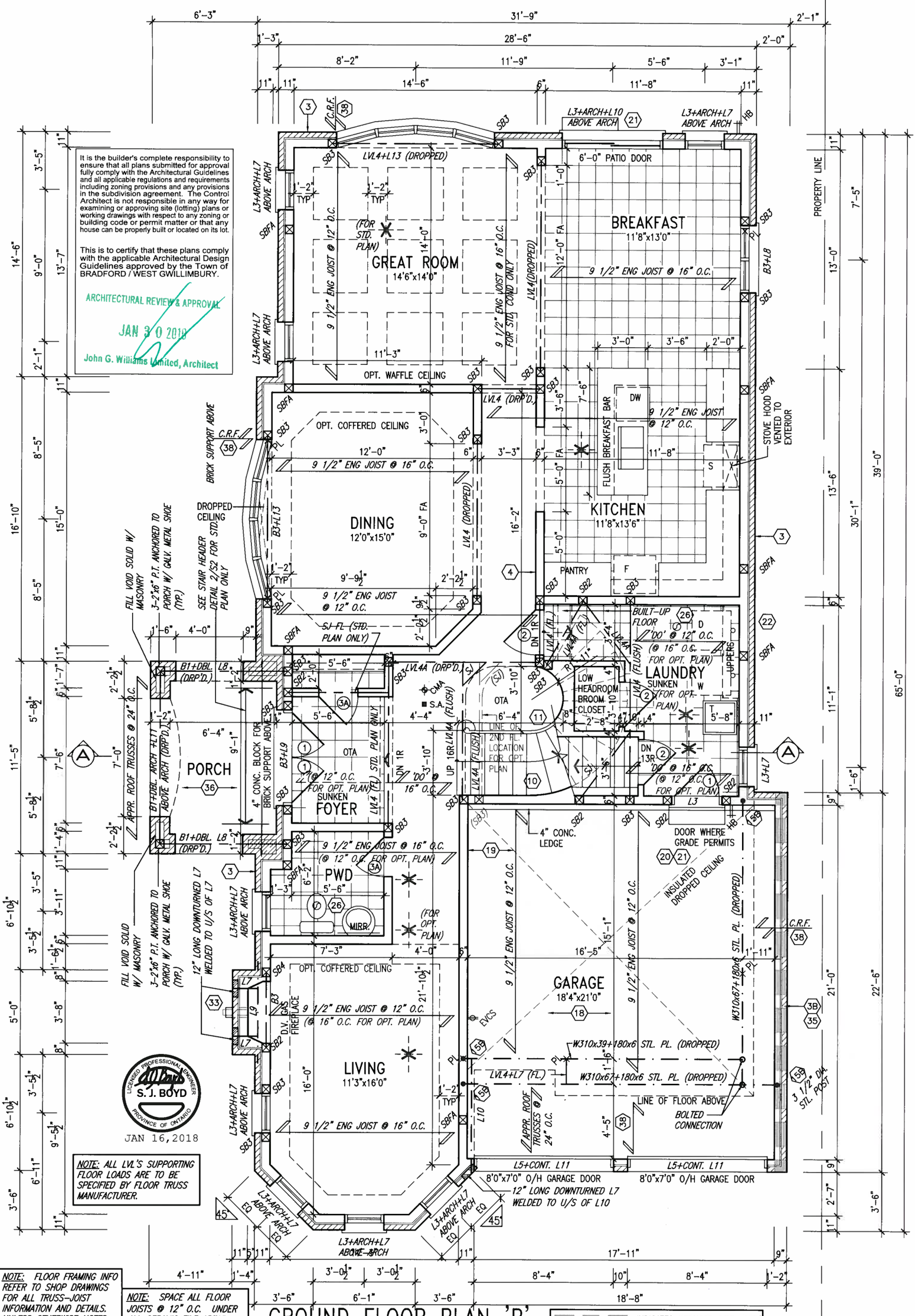

NOTE: ALL LVL'S SUPPORTING FLOOR LOADS ARE TO BE SPECIFIED BY FLOOR TRUSS MANUFACTURER.

NOTE: FLOOR FRAMING INFO REFER TO SHOP DRAWINGS FOR ALL TRUSS-JOIST INFORMATION AND DETAILS. UNLESS OTHERWISE NOTED.

NOTE: SPACE ALL FLOOR JOISTS @ 12" O.C. UNDER ALL CERAMIC TILE AREAS.

GROUND FLOOR PLAN 'B'

INDICATES REDUCED SIDE YARD

LICENSED PROFESSIONAL ENGINEER S.J. BOYD PROVINCE OF ONTARIO
JAN 16, 2018

no.	description	date	by
9	.	.	.
8	.	.	.
7	.	.	.
6	.	.	.
5	.	.	.
4	.	.	.
3	.	.	.
2	REVISED AS PER ENG'S COMMENTS	JAN 12-18	RC
1	ISSUED FOR CLIENT REVIEW	.	.

The undersigned has reviewed and takes responsibility for this design and has the qualifications and meets the requirements set out in the Ontario Building Code to be a Designer.

qualification information
name: Wellington Jno-Baptiste — signature — BCIN 25591
registration information: VA3 Design Inc. — 42658

Contractor must verify all dimensions on the job and report any discrepancy to the Designer before proceeding with the work. All drawings and specifications are instruments of service and the property of the Designer which must be returned at the completion of the work. Drawings are not to be scaled.

VA3 DESIGN
255 Consumers Rd Suite 120
Toronto ON M2J 1R4
t 416.630.2255 f 416.630.4782
va3design.com

project name: GREEN VALLEY EAST — municipality: BRADFORD, ONT.

BAYVIEW WELLINGTON

S38-8C
BAROSSA 8

project no. 16023

date: JANUARY, 2017 — GROUND FLOOR PLAN ELEVATION 'B'

drawn by: WT — checked by: RC — scale: 3/16" = 1'-0" — file name: 16023-S38-8C

drawing no. 2B

RICHARD – H:\ARCHIVE\WORKING\2016\16023.BW\Units\38"\16023-S38-8C.dwg – Tue – Jan 16 2018 – 12:06 PM

All drawings specifications, related documents and design are the copyright property of VA3 DESIGN. Reproduction of this property in whole or in part is strictly prohibited without VA3 DESIGN's written permission.

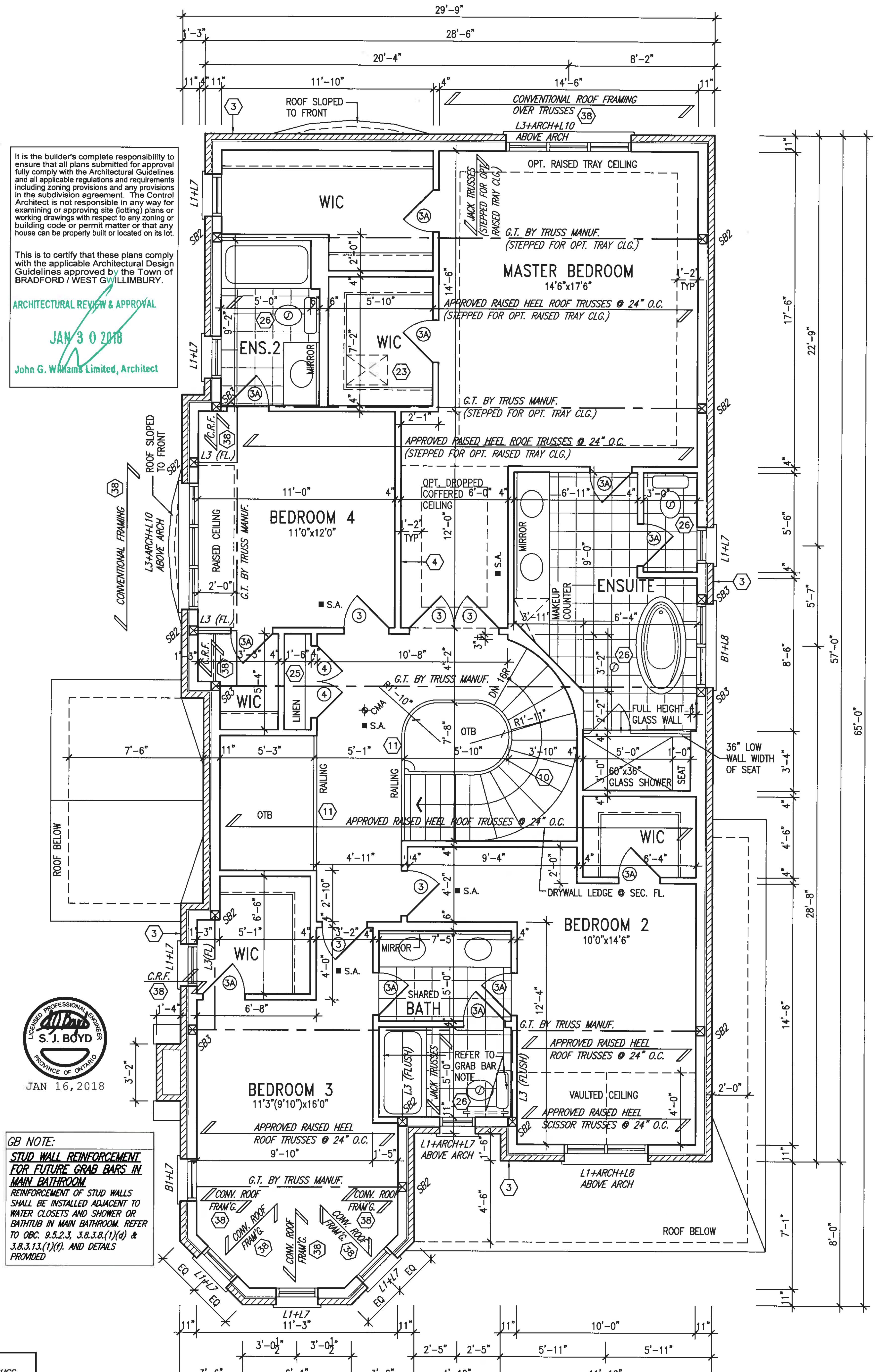

It is the builder's complete responsibility to ensure that all plans submitted for approval fully comply with the Architectural Guidelines and all applicable regulations and requirements including zoning provisions and any provisions in the subdivision agreement. The Control Architect is not responsible in any way for examining or approving site (lotting) plans or working drawings with respect to any zoning or building code or permit matter or that any house can be properly built or located on its lot.

This is to certify that these plans comply with the applicable Architectural Design Guidelines approved by the Town of BRADFORD / WEST GWILLIMBURY.

ARCHITECTURAL REVIEW & APPROVAL
JAN 3 0 2018
John G. Williams Limited, Architect

S. J. BOYD
LICENSED PROFESSIONAL ENGINEER
PROVINCE OF ONTARIO
JAN 16, 2018

GB NOTE:
STUD WALL REINFORCEMENT FOR FUTURE GRAB BARS IN MAIN BATHROOM
REINFORCEMENT OF STUD WALLS SHALL BE INSTALLED ADJACENT TO WATER CLOSETS AND SHOWER OR BATHTUB IN MAIN BATHROOM. REFER TO OBC. 9.5.2.3, 3.8.3.8.(1)(d) & 3.8.3.13.(1)(f). AND DETAILS PROVIDED

NOTE:
REFER TO ROOF TRUSS MANUF. FOR ROOF TRUSS LAYOUTS & BEAM SIZES.

SECOND FLOOR PLAN 'B'

no.	description	date	by
9			
8			
7			
6			
5			
4			
3			
2	REVISED AS PER ENG'S COMMENTS	JAN 12-18	RC
1	ISSUED FOR CLIENT REVIEW		

The undersigned has reviewed and takes responsibility for this design and has the qualifications and meets the requirements set out in the Ontario Building Code to be a Designer.
qualification information
Wellington Jno-Baptiste — 25591
name — signature — BCIN
registration information
VA3 Design Inc. — 42658

Contractor must verify all dimensions on the job and report any discrepancy to the Designer before proceeding with the work. All drawings and specifications are instruments of service and the property of the Designer which must be returned at the completion of the work. Drawings are not to be scaled.

VA3 DESIGN
255 Consumers Rd Suite 120
Toronto ON M2J 1R4
t 416.630.2255 f 416.630.4782
va3design.com

BAYVIEW WELLINGTON

S38-8C
BAROSSA 8

project name: GREEN VALLEY EAST
municipality: BRADFORD, ONT.
project no.: 16023
date: JANUARY, 2017
SECOND FLOOR PLAN ELEVATION 'B'
drawing no.: 3B
drawn by: WT
checked by: RC
scale: 3/16" = 1'-0"
file name: 16023-S38-8C
RICHARD – H:\ARCHIVE\WORKING\2016\16023.BW\Units\38'\16023-S38-8C.dwg – Tue – Jan 16 2018 – 12:06 PM

All drawings specifications, related documents and design are the copyright property of VA3 DESIGN. Reproduction of this property in whole or in part is strictly prohibited without VA3 DESIGN's written permission.

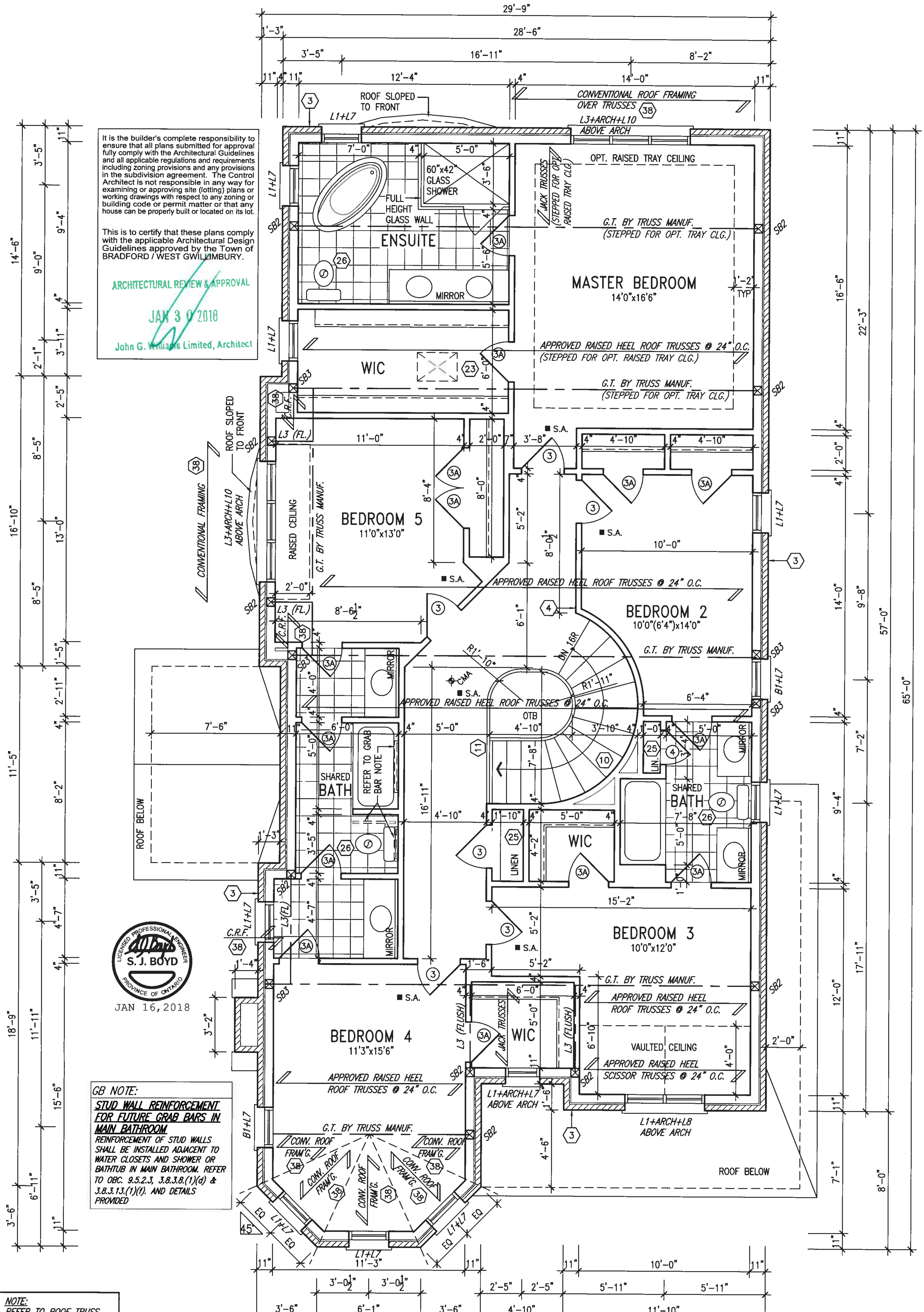

It is the builder's complete responsibility to ensure that all plans submitted for approval fully comply with the Architectural Guidelines and all applicable regulations and requirements including zoning provisions and any provisions in the subdivision agreement. The Control Architect is not responsible in any way for examining or approving site (lotting) plans or working drawings with respect to any zoning or building code or permit matter or that any house can be properly built or located on its lot.

This is to certify that these plans comply with the applicable Architectural Design Guidelines approved by the Town of BRADFORD / WEST GWILLIMBURY.

ARCHITECTURAL REVIEW & APPROVAL
JAN 3 0 2018
John G. Williams Limited, Architect

LICENSED PROFESSIONAL ENGINEER
S. J. BOYD
PROVINCE OF ONTARIO
JAN 16, 2018

GB NOTE:

STUD WALL REINFORCEMENT FOR FUTURE GRAB BARS IN MAIN BATHROOM

REINFORCEMENT OF STUD WALLS SHALL BE INSTALLED ADJACENT TO WATER CLOSETS AND SHOWER OR BATHTUB IN MAIN BATHROOM. REFER TO OBC. 9.5.2.3, 3.8.3.8.(1)(d) & 3.8.3.13.(1)(f). AND DETAILS PROVIDED

NOTE:
REFER TO ROOF TRUSS MANUF. FOR ROOF TRUSS LAYOUTS & BEAM SIZES.

OPT. SECOND FLOOR PLAN 'B'

no.	description	date	by
9		.	
8		.	
7		.	
6		.	
5		.	
4		.	
3		.	
2	REVISED AS PER ENG'S COMMENTS	JAN 12-18	RC
1	ISSUED FOR CLIENT REVIEW	.	

The undersigned has reviewed and takes responsibility for this design and has the qualifications and meets the requirements set out in the Ontario Building Code to be a Designer.

qualification information
Wellington Jno-Baptiste — signature — BCIN 25591
registration information
VA3 Design Inc. — 42658

Contractor must verify all dimensions on the job and report any discrepancy to the Designer before proceeding with the work. All drawings and specifications are instruments of service and the property of the Designer which must be returned at the completion of the work. Drawings are not to be scaled.

VA3 DESIGN
255 Consumers Rd Suite 120
Toronto ON M2J 1R4
t 416.630.2255 f 416.630.4782
va3design.com

BAYVIEW WELLINGTON

S38-8C
BARROSSA 8

project name	municipality	project no.
GREEN VALLEY EAST	BRADFORD, ONT.	16023

date	drawn by	checked by	scale	file name	drawing no.
JANUARY, 2017	WT	RC	3/16" = 1'-0"	16023-S38-8C	4B

OPT. SECOND FLOOR PLAN ELEVATION 'B'

RICHARD – H:\ARCHIVE\WORKING\2016\16023.BW\Units\38'\16023-S38-8C.dwg – Tue – Jan 16 2018 – 12:06 PM

All drawings specifications, related documents and design are the copyright property of VA3 DESIGN. Reproduction of this property in whole or in part is strictly prohibited without VA3 DESIGN's written permission.

1–MAIN ENTRY DOOR & BASEMENT WINDOW EXCLUDED FROM SB–12 CALCULATIONS PER SB–12 3.1.1.6.(4).

FRONT ELEVATION 'B'

It is the builder's complete responsibility to ensure that all plans submitted for approval fully comply with the Architectural Guidelines and all applicable regulations and requirements including zoning provisions and any provisions in the subdivision agreement. The Control Architect is not responsible in any way for examining or approving site (lotting) plans or working drawings with respect to any zoning or building code or permit matter or that any house can be properly built or located on its lot.

This is to certify that these plans comply with the applicable Architectural Design Guidelines approved by the Town of BRADFORD / WEST GWILLIMBURY.

ARCHITECTURAL REVIEW & APPROVAL
JAN 30 2018
John G. Williams Limited, Architect

ELECTRIC VEHICLE CHARGING SYSTEM (EVCS)

ROUGH–IN FOR FUTURE ELECTRIC VEHICLE SUPPLY EQUIPMENT (CHARGING SYSTEM) TO BE INSTALLED.

ROUGH–IN SHALL INCLUDE:

- A minimum 200 amp Panelboard,
- Conduit that is not less than 1 1/16" (27mm) trade size,
- A square 4 11/16" (119mm) trade size electrical outlet box.
- Fumeproofed Electrical outlet box to be installed in the Garage or carport or adjacent to driveway.

REFER TO 2012 OBC. 9.34.4.

S38–8C
BAROSSA 8

project no. 16023

drawing no. 5B

BAYVIEW WELLINGTON

municipality BRADFORD, ONT.

project name GREEN VALLEY EAST

FRONT ELEVATION 'B'

date JANUARY, 2017 | drawn by WT | checked by RC | scale 3/16" = 1'–0" | file name 16023–S38–8C

VA3 DESIGN
255 Consumers Rd Suite 120
Toronto ON M2J 1R4
t 416.630.2255 f 416.630.4782
va3design.com

The undersigned has reviewed and takes responsibility for this design and has the qualifications and meets the requirements set out in the Ontario Building Code to be a Designer.

qualification information: Wellington Jno–Baptiste 25591

registration information: VA3 Design Inc. 42658

Contractor must verify all dimensions on the job and report any discrepancy to the Designer before proceeding with the work. All drawings and specifications are instruments of service and the property of the Designer which must be returned at the completion of the work. Drawings are not to be scaled.

no.	description	date	by
1	ISSUED FOR CLIENT REVIEW		
2	REVISED AS PER ENG'S COMMENTS	JAN 12–18	RC
3			
4			
5			
6			
7			
8			
9			

All drawings specifications, related documents and design are the copyright property of VA3 DESIGN. Reproduction of this property in whole or in part is strictly prohibited without VA3 DESIGN's written permission.

REFER TO FRONT ELEVATION FOR TYPICAL NOTES.

FLANKAGE ELEVATION 'B'

LOCATE UTILITY METERS AWAY FROM PUBLIC VIEW

LICENSED PROFESSIONAL ENGINEER S. J. BOYD PROVINCE OF ONTARIO

JAN 16, 2018

It is the builder's complete responsibility to ensure that all plans submitted for approval fully comply with the Architectural Guidelines and all applicable regulations and requirements including zoning provisions and any provisions in the subdivision agreement. The Control Architect is not responsible in any way for examining or approving site (lotting) plans or working drawings with respect to any zoning or building code or permit matter or that any house can be properly built or located on its lot.

This is to certify that these plans comply with the applicable Architectural Design Guidelines approved by the Town of BRADFORD / WEST GWILLIMBURY.

ARCHITECTURAL REVIEW & APPROVAL

JAN 30 2018

John G. Williams Limited, Architect

S38-8C
BAROSSA 8

project no. 16023

BAYVIEW WELLINGTON

municipality: BRADFORD, ONT.

FLANKAGE ELEVATION 'B'

drawing no. 6B

project name: GREEN VALLEY EAST

date: JANUARY, 2017 | drawn by: WT | checked by: RC | scale: 3/16" = 1'-0" | file name: 16023-S38-8C

RICHARD – H:\ARCHIVE\WORKING\2016\16023.BW\Units\38\16023-S38-8C.dwg – Tue – Jan 16 2018 – 12:06 PM

VA3 DESIGN
255 Consumers Rd Suite 120
Toronto ON M2J 1R4
t 416.630.2255 f 416.630.4782
va3design.com

The undersigned has reviewed and takes responsibility for this design and has the qualifications and meets the requirements set out in the Ontario Building Code to be a Designer.

qualification information: Wellington Jno-Baptiste 25591 BCIN

registration information: VA3 Design Inc. 42658

signature

Contractor must verify all dimensions on the job and report any discrepancy to the Designer before proceeding with the work. All drawings and specifications are instruments of service and the property of the Designer which must be returned at the completion of the work. Drawings are not to be scaled.

no.	description	date	by
9			
8			
7			
6			
5			
4			
3			
2	REVISED AS PER ENG'S COMMENTS	JAN 12-18	RC
1	ISSUED FOR CLIENT REVIEW		

All drawings specifications, related documents and design are the copyright property of VA3 DESIGN. Reproduction of this property in whole or in part is strictly prohibited without VA3 DESIGN's written permission.

REFER TO FRONT ELEVATION FOR TYPICAL NOTES.

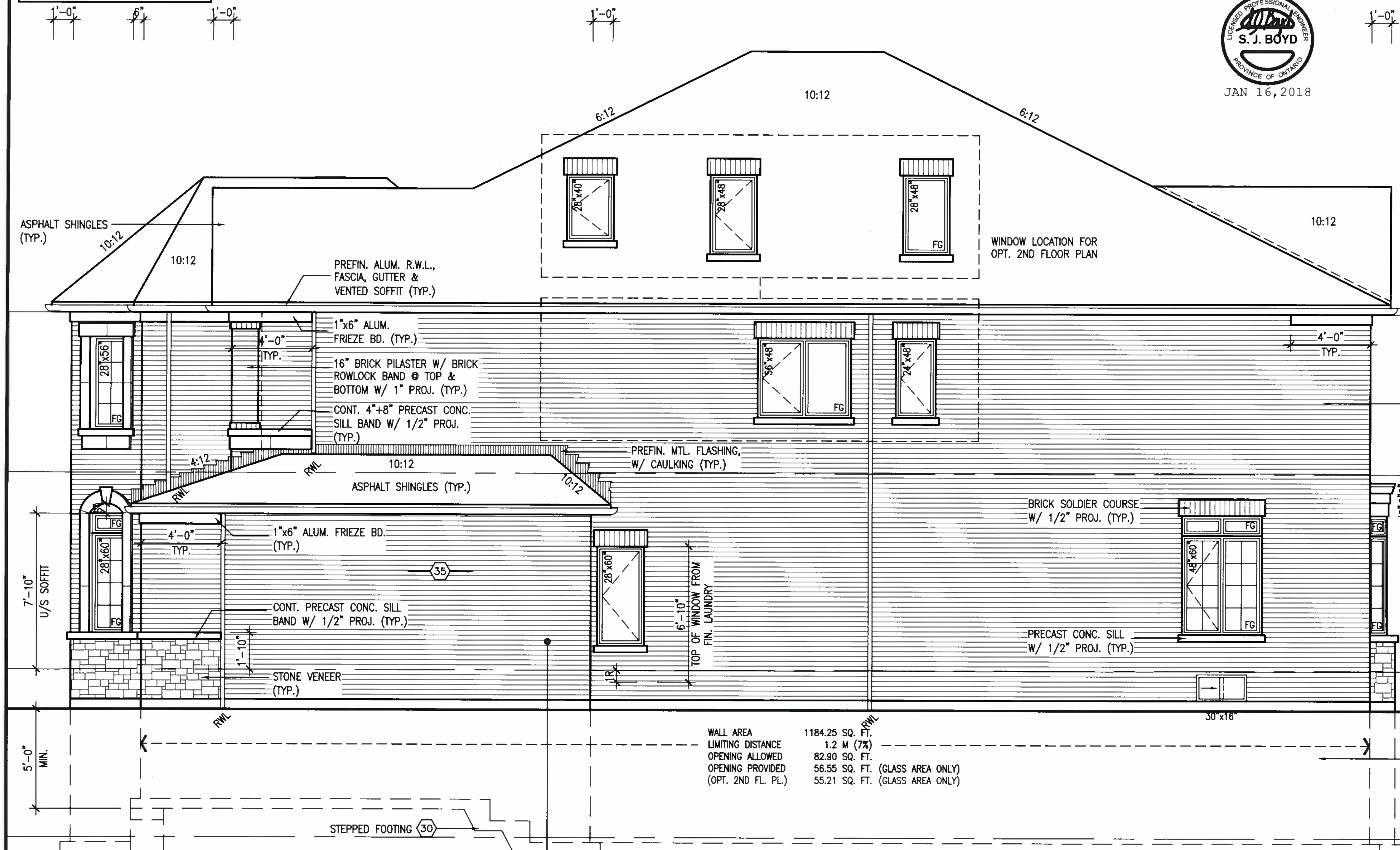

RIGHT SIDE ELEVATION 'B'

BRICK VENEER CONSTRUCTION

(FOR WALLS LESS THAN 1.2M (3'-11") FROM THE LOT LINE)

45 MINUTE FIRE RATED WALL

PROVIDE A CONTINUOUS LAYER OF 12.7mm (1/2") TYPE 'X' GYPSUM BOARD (INTERIOR SIDE) INSTALLED SO THAT ALL EDGES ARE SUPPORTED, TAPED AND FILLED. SPACE BETWEEN WOOD STUDS TO BE FILLED WITH INSULATION CONFORMING TO CAN/ULC-S702, "MINERAL FIBRE THERMAL INSULATION FOR BUILDINGS" WITH A MASS OF NOT LESS THAN 1.22 Kg/SQ.M. AND MUST FILL AT LEAST 90% OF THE CAVITY THICKNESS. THE TYPE 'X' & INSULATION MUST BE RUN CONTINUOUSLY BEHIND ALL INTERSECTING PARTITIONS, MECHANICAL CHASES, BATHTUBS, SHOWERS, ETC. ENSURE INSULATION & TYPE 'X' IS INSTALLED IN GARAGE EXTERIOR WALLS. (REFER TO SECTION SB-2 OF OBC 2012-SUPPLEMENTARY STANDARDS)

LICENSED PROFESSIONAL ENGINEER S. J. BOYD PROVINCE OF ONTARIO

JAN 16, 2018

It is the builder's complete responsibility to ensure that all plans submitted for approval fully comply with the Architectural Guidelines and all applicable regulations and requirements including zoning provisions and any provisions in the subdivision agreement. The Control Architect is not responsible in any way for examining or approving site (lotting) plans or working drawings with respect to any zoning or building code or permit matter or that any house can be properly built or located on its lot.

This is to certify that these plans comply with the applicable Architectural Design Guidelines approved by the Town of BRADFORD / WEST GWILLIMBURY.

ARCHITECTURAL REVIEW & APPROVAL

JAN 3 0 2018

John G. Williams Limited, Architect

S38-8C BAROSSA 8

project no. 16023

drawing no. 7B

BAYVIEW WELLINGTON

municipality BRADFORD, ONT.

RIGHT SIDE ELEVATION 'B'

file name 16023-S38-8C

project name GREEN VALLEY EAST

date JANUARY, 2017

drawn by WT

checked by RC

scale 3/16" = 1'-0"

RICHARD – H:\ARCHIVE\WORKING\2016\16023.BW\Units\38\16023-S38-8C.dwg – Tue – Jan 16 2018 – 12:06 PM

VA3 DESIGN

255 Consumers Rd Suite 120 Toronto ON M2J 1R4 t 416.630.2255 f 416.630.4782 va3design.com

The undersigned has reviewed and takes responsibility for this design and has the qualifications and meets the requirements set out in the Ontario Building Code to be a Designer.

qualification information Wellington Jno-Baptiste 25591 BCIN

registration information VA3 Design Inc. 42658

Contractor must verify all dimensions on the job and report any discrepancy to the Designer before proceeding with the work. All drawings and specifications are instruments of service and the property of the Designer which must be returned at the completion of the work. Drawings are not to be scaled.

no.	description	date	by
9			
8			
7			
6			
5			
4			
3			
2	REVISED AS PER ENG'S COMMENTS	JAN 12-18	RC
1	ISSUED FOR CLIENT REVIEW		

All drawings specifications, related documents and design are the copyright property of VA3 DESIGN. Reproduction of this property in whole or in part is strictly prohibited without VA3 DESIGN's written permission.

REAR ELEVATION 'B'

ROOF PLAN ELEVATION 'B'

LICENSED PROFESSIONAL ENGINEER
S. J. BOYD
PROVINCE OF ONTARIO
JAN 16,2018

It is the builder's complete responsibility to ensure that all plans submitted for approval fully comply with the Architectural Guidelines and all applicable regulations and requirements including zoning provisions and any provisions in the subdivision agreement. The Control Architect is not responsible in any way for examining or approving site (lotting) plans or working drawings with respect to any zoning or building code or permit matter or that any house can be properly built or located on its lot.

This is to certify that these plans comply with the applicable Architectural Design Guidelines approved by the Town of BRADFORD / WEST GWILLIMBURY.

ARCHITECTURAL REVIEW & APPROVAL

JAN 30 2018

John G. Williams Limited, Architect

S38-8C
BAROSSA 8

project no. 16023

BAYVIEW WELLINGTON

municipality: BRADFORD, ONT.

project name: GREEN VALLEY EAST

REAR ELEVATION 'B'

drawing no. **8B**

date: JANUARY, 2017 | drawn by: WT | checked by: RC | scale: 3/16" = 1'-0" | file name: 16023-S38-8C

RICHARD – H:\ARCHIVE\WORKING\2016\16023.BW\Units\38\16023-S38-8C.dwg – Tue – Jan 16, 2018 – 12:06 PM

VA3 DESIGN
255 Consumers Rd Suite 120
Toronto ON M2J 1R4
t 416.630.2255 f 416.630.4782
va3design.com

The undersigned has reviewed and takes responsibility for this design and has the qualifications and meets the requirements set out in the Ontario Building Code to be a Designer.

Wellington Jno-Baptiste
signature

name	registration information
Wellington Jno-Baptiste	25591 BCIN
VA3 Design Inc.	42658

Contractor must verify all dimensions on the job and report any discrepancy to the Designer before proceeding with the work. All drawings and specifications are instruments of service and the property of the Designer which must be returned at the completion of the work. Drawings are not to be scaled.

no.	description	date	by
9	.	.	.
8	.	.	.
7	.	.	.
6	.	.	.
5	.	.	.
4	.	.	.
3	.	.	.
2	REVISED AS PER ENG'S COMMENTS	JAN 12-18	RC
1	ISSUED FOR CLIENT REVIEW	.	.

All drawings specifications, related documents and design are the copyright property of VA3 DESIGN. Reproduction of this property in whole or in part is strictly prohibited without VA3 DESIGN's written permission.

UNINSULATED OPENINGS (PER OBC. SB-12,3.1.1(7))

S38-8C ELEVATION B	ENERGY EFFICIENCY – OBC SB12		
ELEVATION	WALL AREA S.F.	OPENING S.F.	PERCENTAGE
FRONT	595 S.F.	130.27 S.F.	21.89 %
LEFT SIDE	1305 S.F.	168.91 S.F.	12.94 %
RIGHT SIDE	1305 S.F.	65.66 S.F.	5.03 %
REAR	595 S.F.	149.14 S.F.	25.07 %
* OPENINGS OMITTED AS PER SB-12 3.1.1.9(4) MAX 19.9 S.F. REFER TO ELEVATION FOR LOCATION		0.00 S.F.	
TOTAL SQ. FT.	3800.00 S.F.	513.98 S.F.	13.53 %
TOTAL SQ. M.	353.03 S.M.	47.75 S.M.	13.53 %

UNINSULATED OPENINGS (PER OBC. SB-12,3.1.1(7))

S38-8C ELEVATION B OPT. PLAN	ENERGY EFFICIENCY – OBC SB12		
ELEVATION	WALL AREA S.F.	OPENING S.F.	PERCENTAGE
FRONT	595 S.F.	130.27 S.F.	21.89 %
LEFT SIDE	1305 S.F.	225.41 S.F.	17.27 %
RIGHT SIDE	1305 S.F.	62.11 S.F.	4.76 %
REAR	595 S.F.	160.02 S.F.	26.89 %
* OPENINGS OMITTED AS PER SB-12 3.1.1.9(4) MAX 19.9 S.F. REFER TO ELEVATION FOR LOCATION		0.00 S.F.	
TOTAL SQ. FT.	3800.00 S.F.	577.81 S.F.	15.21 %
TOTAL SQ. M.	353.03 S.M.	53.68 S.M.	15.21 %

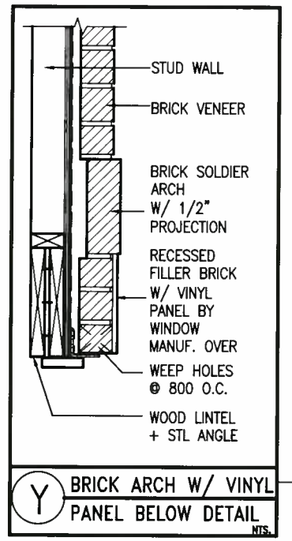

Y BRICK ARCH W/ VINYL PANEL BELOW DETAIL
NTS.

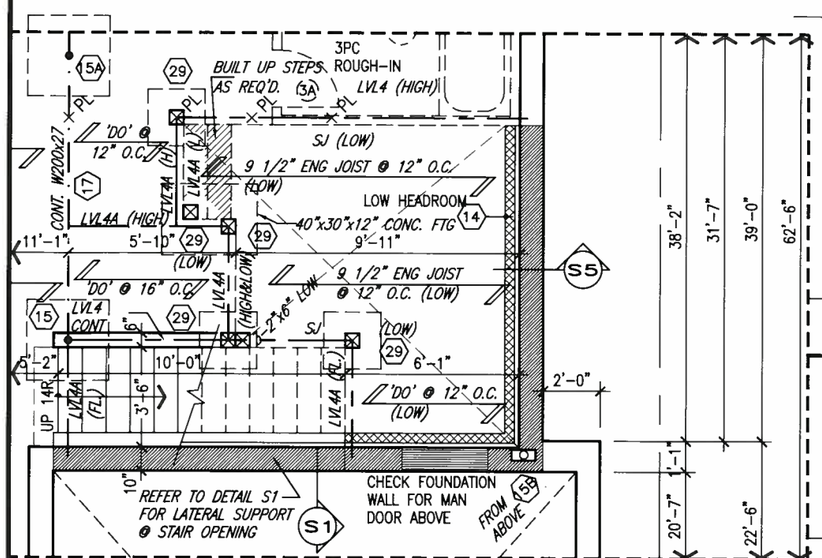

PART. BASEMENT PLAN
W/ SUNKEN LAUNDRY
(-2R TO -3R COND.)

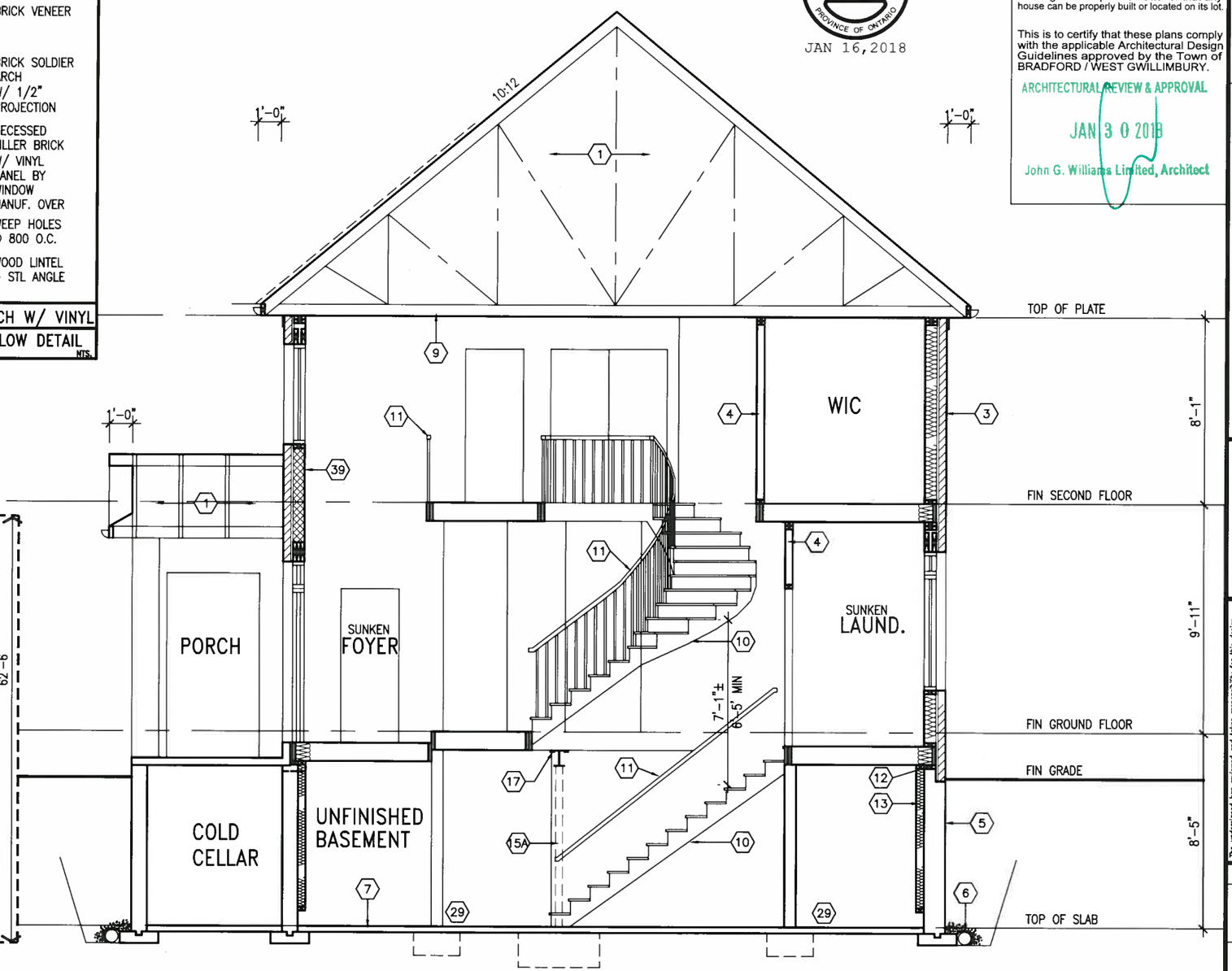

CROSS SECTION 'A-A'

LICENSED PROFESSIONAL ENGINEER S.J. BOYD PROVINCE OF ONTARIO
JAN 16,2018

It is the builder's complete responsibility to ensure that all plans submitted for approval fully comply with the Architectural Guidelines and all applicable regulations and requirements including zoning provisions and any provisions in the subdivision agreement. The Control Architect is not responsible in any way for examining or approving site (lotting) plans or working drawings with respect to any zoning or building code or permit matter or that any house can be properly built or located on its lot.

This is to certify that these plans comply with the applicable Architectural Design Guidelines approved by the Town of BRADFORD / WEST GWILLIMBURY.

ARCHITECTURAL REVIEW & APPROVAL
JAN 30 2018
John G. Williams Limited, Architect

S38-8C
BAROSSA 8

project no. 16023

BAYVIEW WELLINGTON

municipality: BRADFORD, ONT.

CROSS SECTION A-A

drawing no. **9B**

project name: GREEN VALLEY EAST

date: JANUARY, 2017 | drawn by: WT | checked by: RC | scale: 3/16" = 1'-0" | file name: 16023-S38-8C

RICHARD – H:\ARCHIVE\WORKING\2016\16023.GW\Units\38\16023-S38-8C.dwg – Tue – Jan 16 2018 – 12:06 PM

VA3 DESIGN
255 Consumers Rd Suite 120
Toronto ON M2J 1R4
t 416.630.2255 f 416.630.4782
va3design.com

The undersigned has reviewed and takes responsibility for this design and has the qualifications and meets the requirements set out in the Ontario Building Code to be a Designer.

qualification information: Wellington Jno-Baptiste, BCIN 25591

registration information: VA3 Design Inc., 42658

signature

Contractor must verify all dimensions on the job and report any discrepancy to the Designer before proceeding with the work. All drawings and specifications are instruments of service and the property of the Designer which must be returned at the completion of the work. Drawings are not to be scaled.

no.	description	date	by
9	.	.	.
8	.	.	.
7	.	.	.
6	.	.	.
5	.	.	.
4	.	.	.
3	.	.	.
2	REVISED AS PER ENG'S COMMENTS	JAN 12-18	RC
1	ISSUED FOR CLIENT REVIEW	.	.

All drawings specifications, related documents and design are the copyright property of VA3 DESIGN. Reproduction of this property in whole or in part is strictly prohibited without VA3 DESIGN's written permission.

REFER TO FULL PLANS FOR TYPICAL NOTES.

It is the builder's complete responsibility to ensure that all plans submitted for approval fully comply with the Architectural Guidelines and all applicable regulations and requirements including zoning provisions and any provisions in the subdivision agreement. The Control Architect is not responsible in any way for examining or approving site (lotting) plans or working drawings with respect to any zoning or building code or permit matter or that any house can be properly built or located on its lot.

This is to certify that these plans comply with the applicable Architectural Design Guidelines approved by the Town of BRADFORD / WEST GWILLIMBURY.

ARCHITECTURAL REVIEW & APPROVAL
JAN 3 0 2018
John G. Williams Limited, Architect

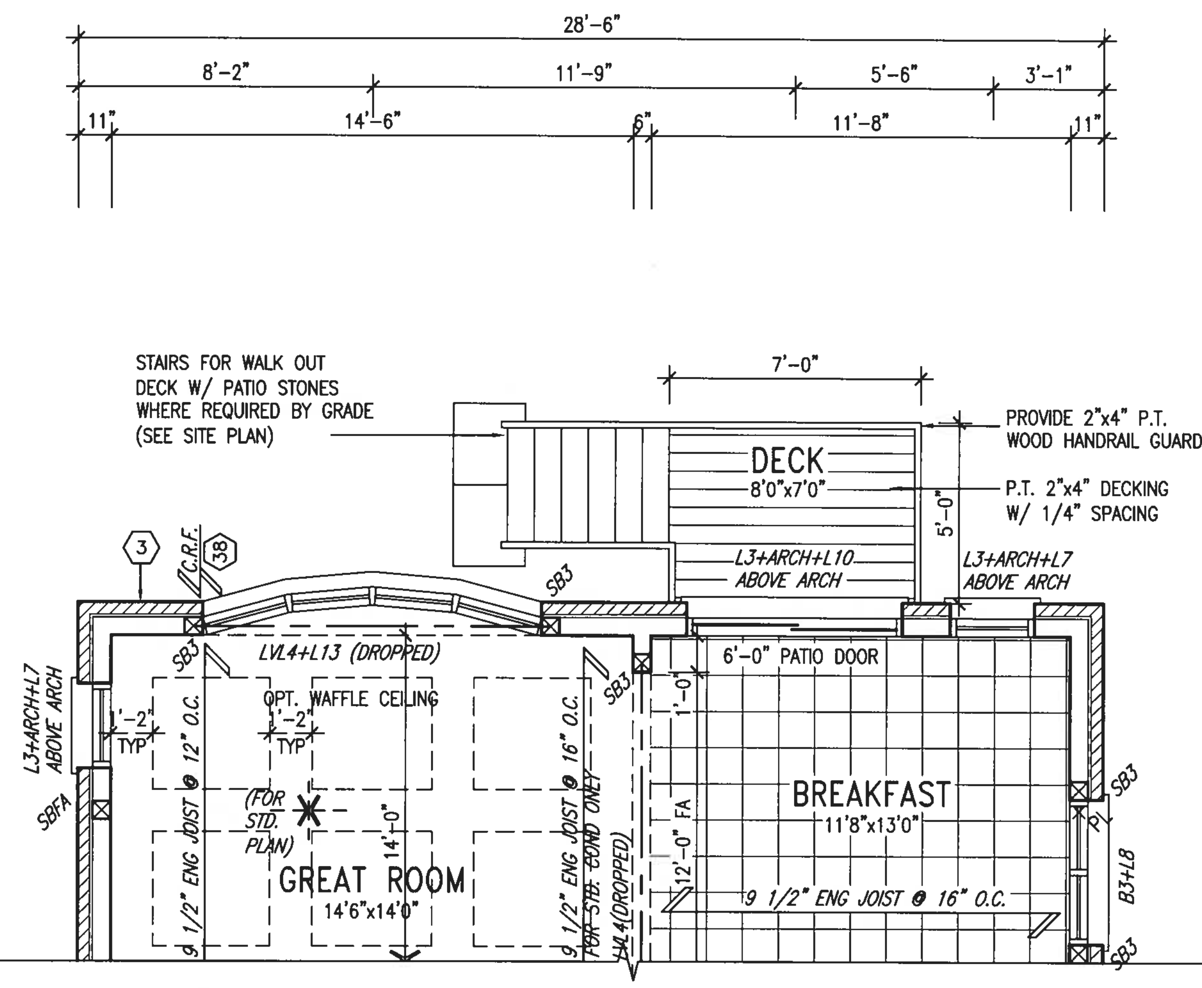

PART. GROUND FLOOR PLAN 'B' – W.O.D. CONDITION

S. J. BOYD
LICENSED PROFESSIONAL ENGINEER
PROVINCE OF ONTARIO
JAN 16,2018

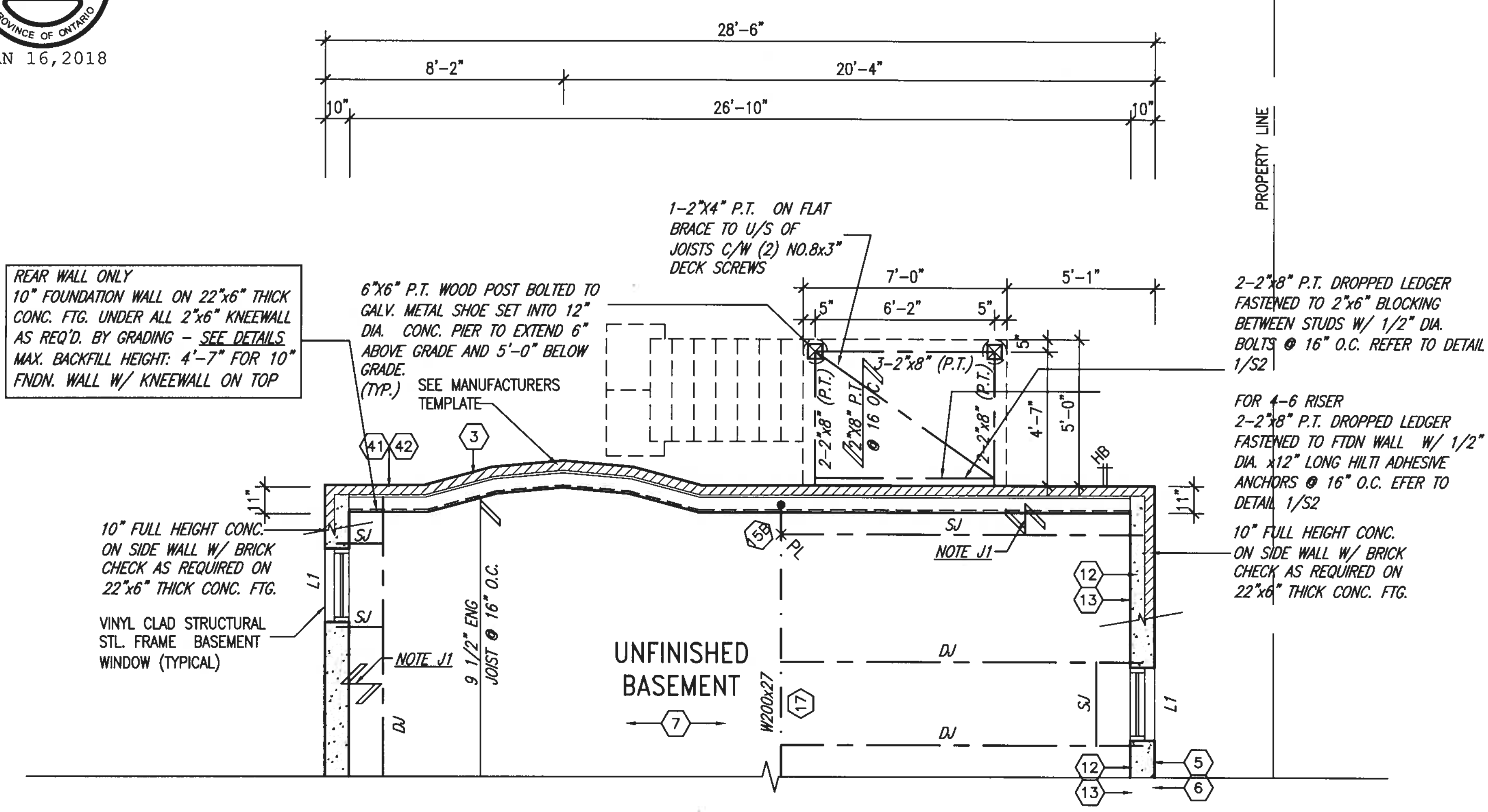

PART. BASEMENT PLAN 'B' – W.O.D. CONDITION

NOTE J1:
PROVIDE SOLID BLOCKING @ 24" O.C. WHERE FLOOR JOISTS ARE PARALLEL TO FOUNDATION WALL (TYP.)

NOTE: SPACE ALL FLOOR JOISTS @ 12" O.C. UNDER ALL CERAMIC TILE AREAS.

NOTE: ALL LVL'S SUPPORTING FLOOR LOADS ARE TO BE SPECIFIED BY FLOOR TRUSS MANUFACTURER.

NOTE: FLOOR FRAMING INFO REFER TO SHOP DRAWINGS FOR ALL TRUSS-JOIST INFORMATION AND DETAILS. UNLESS OTHERWISE NOTED.

UNINSULATED OPENINGS (PER OBC. SB-12,3.1.1(7))

S38-8C ELEVATION B WOD	ENERGY EFFICIENCY – OBC SB12		
ELEVATION	WALL AREA S.F.	OPENING S.F.	PERCENTAGE
FRONT	595 S.F.	130.27 S.F.	21.89 %
LEFT SIDE	1305 S.F.	168.91 S.F.	12.94 %
RIGHT SIDE	1305 S.F.	65.66 S.F.	5.03 %
REAR	714 S.F.	149.14 S.F.	20.89 %
* OPENINGS OMITTED AS PER SB-12 3.1.1.9(4) MAX 19.9 S.F. REFER TO ELEVATION FOR LOCATION		0.00 S.F.	
TOTAL SQ. FT.	3919.00 S.F.	513.98 S.F.	13.12 %
TOTAL SQ. M.	364.08 S.M.	47.75 S.M.	13.12 %

UNINSULATED OPENINGS (PER OBC. SB-12,3.1.1(7))

S38-8C ELEV. B OPT. PLAN WOD	ENERGY EFFICIENCY – OBC SB12		
ELEVATION	WALL AREA S.F.	OPENING S.F.	PERCENTAGE
FRONT	595 S.F.	130.27 S.F.	21.89 %
LEFT SIDE	1305 S.F.	225.41 S.F.	17.27 %
RIGHT SIDE	1305 S.F.	62.11 S.F.	4.76 %
REAR	714 S.F.	160.02 S.F.	22.41 %
* OPENINGS OMITTED AS PER SB-12 3.1.1.9(4) MAX 19.9 S.F. REFER TO ELEVATION FOR LOCATION		0.00 S.F.	
TOTAL SQ. FT.	3919.00 S.F.	577.81 S.F.	14.74 %
TOTAL SQ. M.	364.08 S.M.	53.68 S.M.	14.74 %

no.	description	date	by
9	.	.	.
8	.	.	.
7	.	.	.
6	.	.	.
5	.	.	.
4	.	.	.
3	.	.	.
2	REVISED AS PER ENG'S COMMENTS	JAN 12-18	RC
1	ISSUED FOR CLIENT REVIEW	.	.

The undersigned has reviewed and takes responsibility for this design and has the qualifications and meets the requirements set out in the Ontario Building Code to be a Designer.
qualification information
Wellington Jno-Baptiste (name) (signature) 25591 BCIN
registration information
VA3 Design Inc. 42658

Contractor must verify all dimensions on the job and report any discrepancy to the Designer before proceeding with the work. All drawings and specifications are instruments of service and the property of the Designer which must be returned at the completion of the work. Drawings are not to be scaled.

VA3 DESIGN
255 Consumers Rd Suite 120
Toronto ON M2J 1R4
t 416.630.2255 f 416.630.4782
va3design.com

BAYVIEW WELLINGTON

S38-8C
BAROSSA 8

project name: GREEN VALLEY EAST
municipality: BRADFORD, ONT.
project no.: 16023
date: JANUARY, 2017
PARTI BASEMENT PLAN ELEV. 'B' WOD COND
drawing no.: 10B
drawn by: WT
checked by: RC
scale: 3/16" = 1'-0"
file name: 16023-S38-8C
RICHARD – H:\ARCHIVE\WORKING\2016\16023.BW\Units\38'\16023-S38-8C.dwg – Tue – Jan 16 2018 – 12:06 PM

All drawings specifications, related documents and design are the copyright property of VA3 DESIGN. Reproduction of this property in whole or in part is strictly prohibited without VA3 DESIGN's written permission.

REFER TO FRONT ELEVATION FOR TYPICAL NOTES.

REAR ELEVATION 'B'- 9R OR MORE W.O.D. CONDITION

BASEMENT WINDOW SIZES
4R-8R USE 30"x24" VINYL CLAD STRUCTURAL STEEL FRAME BASEMENT WINDOWS

LICENSED PROFESSIONAL ENGINEER S. J. BOYD PROVINCE OF ONTARIO
JAN 16,2018

It is the builder's complete responsibility to ensure that all plans submitted for approval fully comply with the Architectural Guidelines and all applicable regulations and requirements including zoning provisions and any provisions in the subdivision agreement. The Control Architect is not responsible in any way for examining or approving site (lotting) plans or working drawings with respect to any zoning or building code or permit matter or that any house can be properly built or located on its lot.

This is to certify that these plans comply with the applicable Architectural Design Guidelines approved by the Town of BRADFORD / WEST GWILLIMBURY.

ARCHITECTURAL REVIEW & APPROVAL
JAN 30 2018
John G. Williams Limited, Architect

S38-8C
BAROSSA 8

project no. 16023

BAYVIEW WELLINGTON

municipality: BRADFORD, ONT.

REAR ELEVATION 'B' W.O.D. COND.

drawing no. **11B**

project name: GREEN VALLEY EAST

date: JANUARY, 2017 | drawn by: WT | checked by: RC | scale: 3/16" = 1'-0" | file name: 16023-S38-8C

RICHARD - H:\ARCHIVE\WORKING\2016\16023\DWG\Units\38"\16023-S38-8C.dwg - Tue - Jan 16 2018 - 12:06 PM

VA3 DESIGN
255 Consumers Rd Suite 120
Toronto ON M2J 1R4
t 416.630.2255 f 416.630.4782
va3design.com

The undersigned has reviewed and takes responsibility for this design and has the qualifications and meets the requirements set out in the Ontario Building Code to be a Designer.

qualification information

Wellington Jno-Baptiste	25591
name	BCIN
registration information	42658
VA3 Design Inc.	

signature

Contractor must verify all dimensions on the job and report any discrepancy to the Designer before proceeding with the work. All drawings and specifications are instruments of service and the property of the Designer which must be returned at the completion of the work. Drawings are not to be scaled.

no.	description	date	by
9	.	.	.
8	.	.	.
7	.	.	.
6	.	.	.
5	.	.	.
4	.	.	.
3	.	.	.
2	REVISED AS PER ENG'S COMMENTS	JAN 12-18	RC
1	ISSUED FOR CLIENT REVIEW	.	.

All drawings specifications, related documents and design are the copyright property of VA3 DESIGN. Reproduction of this property in whole or in part is strictly prohibited without VA3 DESIGN's written permission.

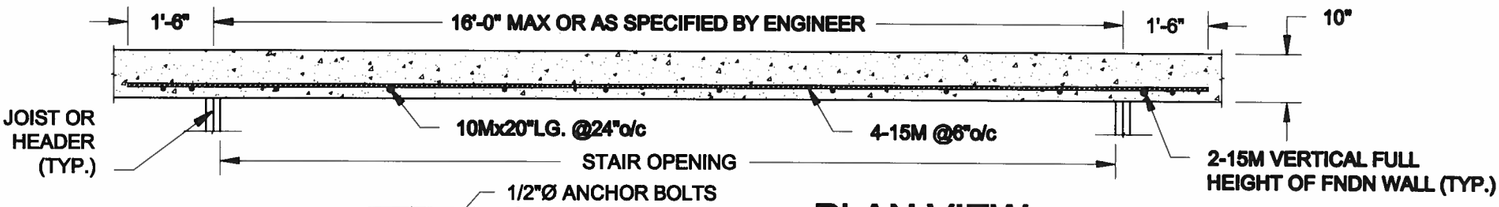

PLAN VIEW

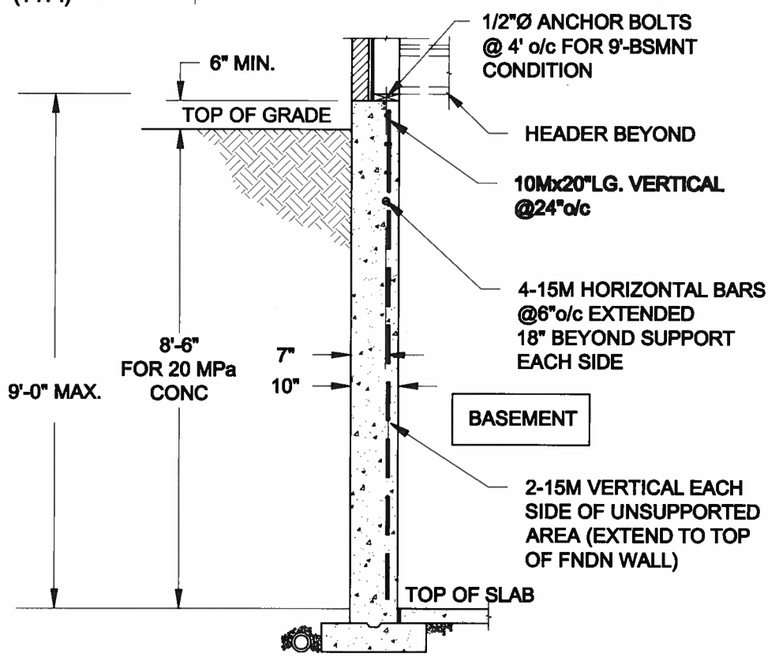

NOTE:

1. CONFORM TO ONTARIO BUILDING CODE, 2012.
2. CONCRETE COMPRESSIVE STRENGTH AT 28 DAYS TO BE 20 MPa. MIN.
3. REINFORCING STEEL TO BE GRADE 400.

1 / S1 LATERALLY UNSUPPORTED WALL

SCALE: 3/8" = 1'-0"

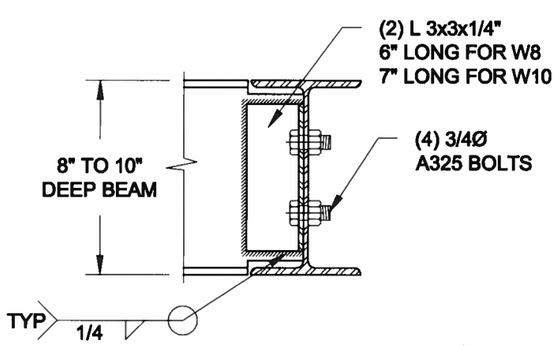

NOTE: DETAIL IS APPLICABLE TO W8x40 (W200x59) BEAM MAX AND W10x39 (W250x58) BEAM MAX.

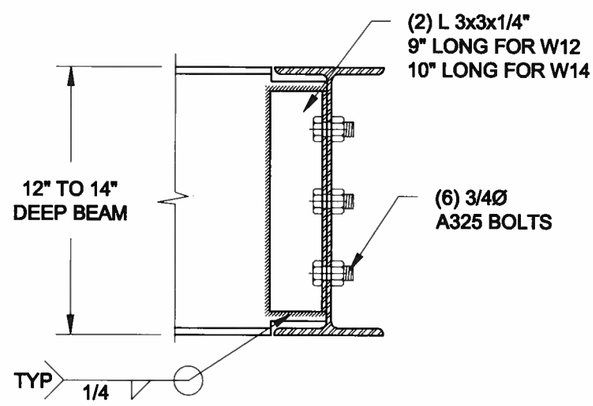

NOTE: DETAIL IS APPLICABLE TO W12x58 (W310x86) BEAM MAX AND W14x48 (W360x72) BEAM MAX.

2 / S1 STEEL BEAM CONNECTION DETAIL

SCALE: 1-1/2" = 1'-0"

Scale: AS NOTED	QUAILE ENGINEERING LTD. 38 Parkside Drive, UNIT 7 Newmarket, ON L3Y 8J9 T: 905-853-8547 E: quaile.eng@rogers.com	Engineer's Seal: LICENSED PROFESSIONAL ENGINEER S. J. BOYD PROVINCE OF ONTARIO JAN 16, 2018	Project: BAYVIEW WELLINGTON HOMES - GREEN VALLEY ESTATES - SINGLES BRADFORD, ONTARIO
Date: OCT-09-2017			TYPICAL STRUCTURAL DETAILS
Drawn: SC / Checked: SJB			Project No.: 17-215 / Drawing No.: S1

F:\SamC-09\2017\17-215 BAYVIEW WELLINGTON GREEN VALLEY SINGLES\17-215.dwg

FOR 9 1/2" JOIST DEPTH

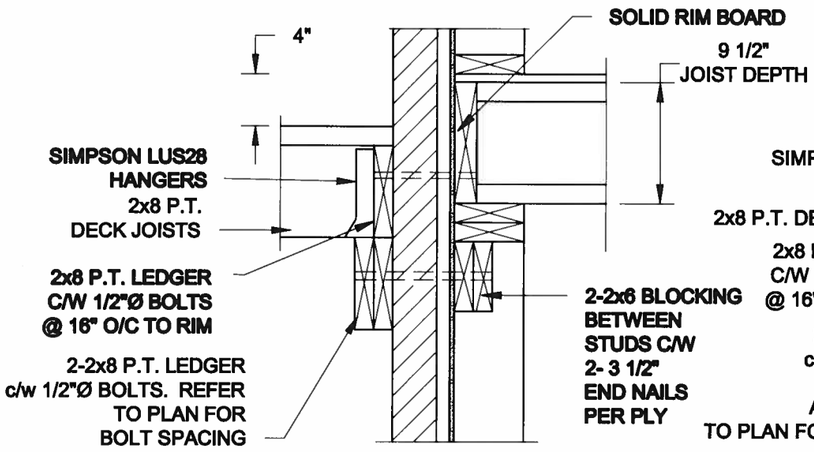

1A / S2 DECK FASTENING DETAIL

SCALE: 1" = 1'-0"

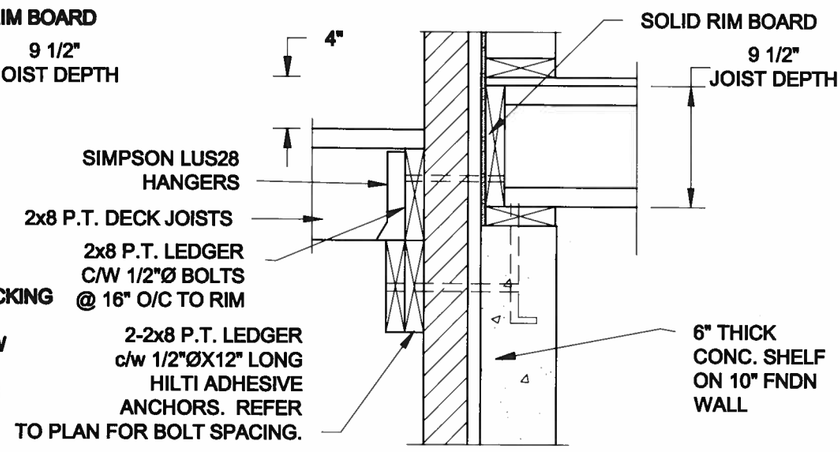

1B / S2 DECK FASTENING DETAIL

SCALE: 1" = 1'-0"

FOR 11 7/8" JOIST DEPTH

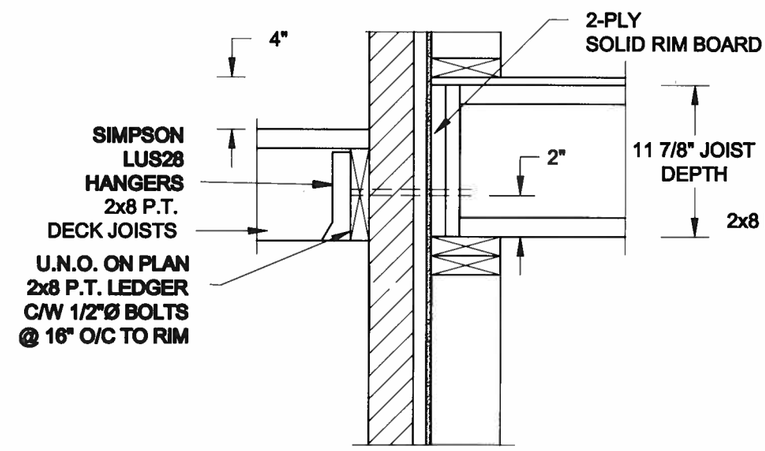

1C / S2 DECK FASTENING DETAIL

SCALE: 1" = 1'-0"

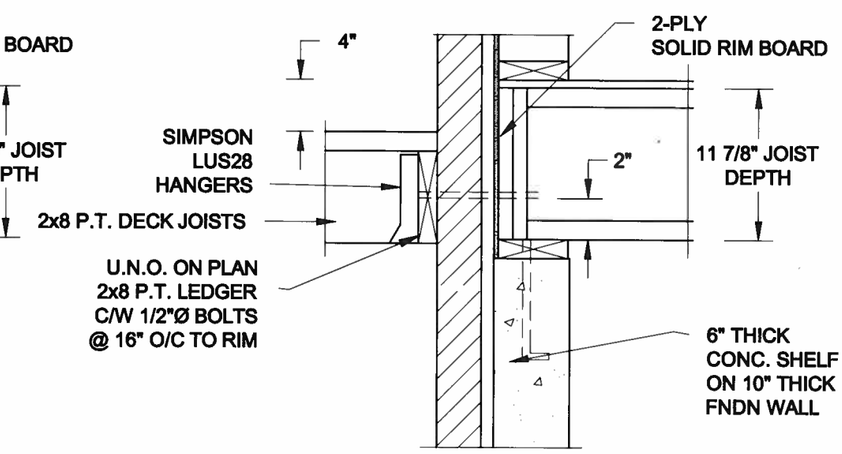

1D / S2 DECK FASTENING DETAIL

SCALE: 1" = 1'-0"

NOTE: 1. WHERE BACKFILL HEIGHT < 4'-7", PROVIDE 2x6 @ 16" o/c KNEEWALL ON 10" THICK CONC FNDN WALL
2. WHERE BACKFILL HEIGHT > 4'-7", PROVIDE 6" CONC SHELF FOR BRICK VENEER ON 10" THICK CONC FNDN WALL
3. FOOTING TO BE 22"x6" THICK UNLESS NOTED OTHERWISE ON PLAN.

FOR 9 1/2" JOIST DEPTH

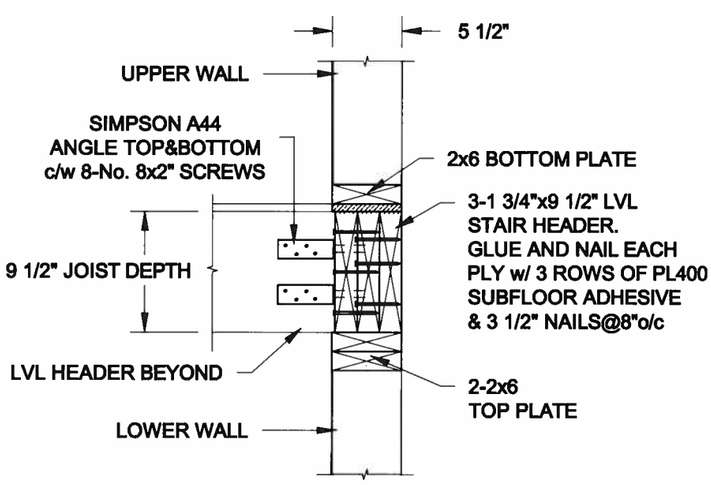

2A / S2 STAIR HEADER

SCALE: 1" = 1'-0"

FOR 11 7/8" JOIST DEPTH

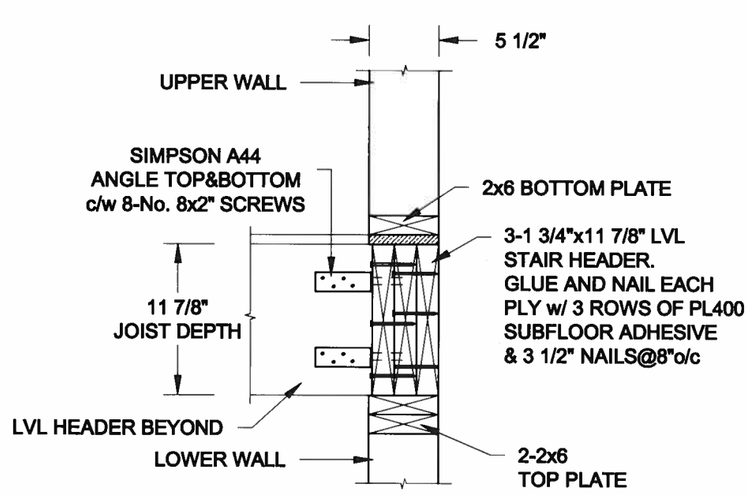

2B / S2 STAIR HEADER

SCALE: 1" = 1'-0"

Scale: AS NOTED	QUAILE ENGINEERING LTD. 38 Parkside Drive, UNIT 7 Newmarket, ON L3Y 8J9 T: 905-853-8547 E: quaile.eng@rogers.com	Engineer's Seal: LICENSED PROFESSIONAL ENGINEER S. J. BOYD PROVINCE OF ONTARIO JAN 16, 2018	Project: BAYVIEW WELLINGTON HOMES - GREEN VALLEY ESTATES - SINGLES BRADFORD, ONTARIO
Date: OCT-20-2017			TYPICAL STRUCTURAL DETAILS
Drawn: SC / Checked: SJB			Project No.: 17-215 / Drawing No.: S2

P:\SamC-00\2017\17-215 BAYVIEW WELLINGTON GREEN VALLEY SINGLES\17-215.dwg

CONSTRUCTION NOTES (Unless otherwise noted)

ALL CONSTRUCTION TO ADHERE TO THESE PLANS AND SPEC'S AND TO CONFORM TO THE ONTARIO BUILDING CODE AND ALL OTHER APPLICABLE CODES AND AUTHORITIES HAVING JURISDICTION. THESE REQUIREMENTS ARE TO BE TAKEN AS MINIMUM SPECIFICATIONS. ONT. REG. 332/12-2012 OBC

(1.) **ROOF CONSTRUCTION**
NO.210 (10.25kg/m2) ASPHALT SHINGLES, 10mm (3/8") PLYWOOD SHEATHING WITH "H" CLIPS. APPROVED WOOD TRUSSES @ 600mm (24") O.C. MAX. APPROVED EAVES PROTECTION TO EXTEND 900mm (3'-0") FROM EDGE OF ROOF AND MIN. 300mm (12") BEYOND INNER FACE OF EXTERIOR WALL. (EAVES PROTECTION NOT REQ'D FOR ROOF SLOPES 8:12 OR GREATER) 38x89 (2"x4") TRUSS BRACING @ 1830mm (6'-0") O.C. AT BOTTOM CHORD. PREFIN. ALUM. EAVESTROUGH, FASCIA, RWL & VENTED SOFFIT. PROVIDE ICE & WATER SHIELD TO ALL ROOF/WALL SURFACES SUSCEPTIBLE TO ICE DAMMING. ROOF SHEATHING TO BE FASTENED 150 (6") c/c ALONG EDGES & INTERMEDIATE SUPPORTS WHEN TRUSSES SPACED GREATER THAN 406 (16"). ATTIC VENTILATION 1:300 OF INSULATED CEILING AREA WITH MIN. 25% AT EAVES & MIN. 25% AT RIDGE (OBC 9.19.1.2.).

(2.) **FRAME WALL CONSTRUCTION (2"x6") (SB-12-TABLE 3.1.1.2.A)**
SIDING AS PER ELEV., 19x38 (1"x2") VERTICAL WOOD FURRING, CONTIN. SHEATHING MEMBRANE, 9.5mm (3/8") EXT. TYPE SHEATHING, 38x140 (2"x6") STUDS @ 400mm (16") O.C., RSI 3.87 (R22) INSULATION AND APPR. VAPOUR BARRIER AND APPR. CONTIN. AIR BARRIER, 13mm (1/2") INT. DRYWALL FINISH. SIDING TO BE MIN. 200mm (8") ABOVE FINISH GRADE. REFER TO OBC SB-12, CHAPTER 3 FOR ADDITIONAL THERMAL INSULATION REQUIREMENTS.

(2A) RESERVED

(2B) **FRAME WALL CONSTRUCTION (2"x4")– GARAGE WALLS**
SIDING AS PER ELEV., 19x38 (1"x2") VERTICAL WOOD FURRING, CONTIN. SHEATHING MEMBRANE, 9.5mm (3/8") EXT. TYPE SHEATHING, 38x89 (2"x4") STUDS @ 400mm (16") O.C. (MAX. HEIGHT 3000mm (9'-10"), WITH APPR. DIAGONAL WALL BRACING. SIDING TO BE MIN. 200mm (8") ABOVE FINISH GRADE.

(2C) RESERVED

(2D) **STUCCO WALL CONSTRUCTION (2"x4") –GARAGE WALLS**
STUCCO CLADDING SYSTEM CONFORMING TO O.B.C. 9.27.1.1.(2) & 9.28 THAT EMPLOY A MINIMUM 10mm AIR SPACE BEHIND THE CLADDING WITH POSITIVE DRAINAGE TO THE EXTERIOR AND APPLIED PER MANUFACTURERS SPECIFICATIONS OVER 25mm (1") MIN. EXPANDED OR EXTRUDED RIGID POLYSTYRENE ON APPROVED AIR/MOISTURE BARRIER ON 13mm (1/2") EXT. TYPE SHEATHING ON 38x89 (2"x4") STUDS @ 400 (16") O.C.. STUCCO TO BE MIN. 200 (8") ABOVE FINISH GRADE.

(2E) **WALLS ADJACENT TO ATTIC SPACE – NO CLADDING**
9.5mm (3/8") EXT. TYPE SHEATHING, 38x140 (2"x6") STUDS @ 400mm (16") O.C., RSI 3.87 (R22) INSULATION AND APPR. VAPOUR BARRIER AND APPR. CONTIN. AIR BARRIER, 13mm (1/2") INTERIOR DRYWALL FINISH. MID-HEIGHT BLOCKING REQ'D. IF NO SHEATHING APPLIED. REFER TO OBC SB-12, CHAPTER 3 FOR ADDITIONAL THERMAL INSULATION REQUIREMENTS.

(3.) **BRICK VENEER CONSTRUCTION (2"x6") (SB-12-TABLE 3.1.1.2.A)**
90mm (4") FACE BRICK, 25mm (1") AIR SPACE, 22x180x0.76mm (7/8"x7"x0.03") GALV. METAL TIES @ 400mm (16") O.C. HORIZONTAL 600mm (24") O.C. VERTICAL. APPROVED SHEATHING PAPER, 9.5mm (3/8") EXT. TYPE SHEATHING, 38x140 (2"x6") STUDS @ 400mm (16") O.C., RSI 3.87 (R22) INSULATION & APPR. VAPOUR BARRIER WITH APPR. CONTIN. AIR BARRIER. 13mm (1/2") INTERIOR DRYWALL FINISH. PROVIDE WEEP HOLES @ 800mm (32") O.C. BOTTOM COURSE AND OVER OPENINGS. PROVIDE BASE FLASHING UP MIN. 150mm (6") BEHIND BUILDING PAPER. REFER TO OBC SB-12, CHAPTER 3 FOR ADDITIONAL THERMAL INSULATION REQUIREMENTS. BRICK TO BE MIN. 150mm (6") ABOVE FINISH GRADE.

(3A) RESERVED

LICENSED PROFESSIONAL ENGINEER
S. J. BOYD
PROVINCE OF ONTARIO
JAN 11, 2018

(3B) **BRICK VENEER CONSTRUCTION (2"x4")– GARAGE WALLS**
90mm (4") FACE BRICK, 25mm (1") AIR SPACE, 22x180x0.76mm (7/8"x7"x0.03") GALV. METAL TIES @ 400mm (16") O.C. HORIZONTAL 600mm (24") O.C. VERTICAL. APPR. SHEATHING PAPER, 9.5mm (3/8") EXT. TYPE SHEATHING, 38x89 (2"x4") STUDS @ 400mm (16") O.C. (MAX. HEIGHT 3000mm 9'-10") WITH APPR. DIAGONAL WALL BRACING. PROVIDE WEEP HOLES @ 800mm (32") O.C. BOTTOM COURSE AND OVER OPENINGS. PROVIDE BASE FLASHING UP MIN. 150mm (6") BEHIND BUILDING PAPER. BRICK TO BE MIN. 150mm (6") ABOVE FINISH GRADE.

(3C) **STUCCO WALL CONSTRUCTION (2"x6") (SB-12-TABLE 3.1.1.2.A)**
STUCCO CLADDING SYSTEM CONFORMING TO O.B.C. 9.27.1.1.(2) & 9.28 THAT EMPLOYS A MINIMUM 10mm AIR SPACE BEHIND THE CLADDING WITH POSITIVE DRAINAGE TO THE EXTERIOR AND APPLIED PER MANUFACTURERS SPECIFICATIONS OVER 25mm (1") MIN. EXTRUDED OR EXPANDED RIGID POLYSTYRENE ON APPR. CONTIN. AIR/MOISTURE BARRIER ON 13mm (1/2") EXT. TYPE SHEATHING ON 38x140 (2"x6") STUDS @ 400mm (16") O.C., RSI 3.87(R22) INSULATION, APPROVED VAPOUR BARRIER, 13mm (1/2") GYPSUM WALLBOARD INTERIOR FINISH. REFER TO OBC SB-12, CHAPTER 3 FOR ADDITIONAL THERMAL INSULATION REQUIREMENTS. STUCCO TO BE MIN. 200 (8") ABOVE FINISH GRADE.

(4.) **INTERIOR STUD PARTITIONS**
FOR BEARING PARTITIONS 38x89 (2"x4") @ 400mm (16") O.C. FOR 2 STOREYS AND 300mm (12") O.C. FOR 3 STOREYS, NON-BEARING PARTITIONS 38x89 (2"x4") @ 600mm (24") O.C. PROVIDE 38x89 (2"x4") BOTTOM PLATE AND 2/38x89 (2/2"x4") TOP PLATE. 13mm (1/2") INT. DRYWALL BOTH SIDES OF STUDS, PROVIDE 38x140 (2"x6") STUDS/PLATES WHERE NOTED.

(5.) **FOUNDATION WALL/FOOTINGS: (9.15.3, 9.15.4, 9.13.2, 9.14.2.1.(2))**
250mm (10") POURED CONC. FDTN. WALL 30MPa (4350psi) WITH BITUMENOUS DAMPPROOFING AND DRAINAGE LAYER. DRAINAGE LAYER REQ'D. WHEN BASEMENT INSUL. EXTENDS 900 (2'-11") BELOW FIN. GRADE. DRAINAGE LAYER IS NOT REQ'D. WHEN FDTN. WALL IS WATERPROOFED. MAXIMUM POUR HEIGHT 2820 (9'-3") ON 560x155 (22"x6") CONTINUOUS KEYED CONC. FTG. BRACE FDTN. WALL PRIOR TO BACKFILLING. ALL FOOTINGS SHALL REST ON NATURAL UNDISTURBED SOIL OR COMPACTED ENGINEERED FILL, WITH MIN. BEARING CAPACITY OF 150kPa OR GREATER. IF SOIL BEARING DOES NOT MEET MINIMUM CAPACITY, ENGINEERED FOOTINGS ARE REQUIRED.

STOREYS SUPPORTED	W/ MASONRY VENEER	W/ SIDING ONLY
1	18" WIDE x 6" DEEP	18" WIDE x 6" DEEP
2	22" WIDE x 6" DEEP	22" WIDE x 6" DEEP
3	28" WIDE x 9" DEEP	22" WIDE x 6" DEEP

-SEE OBC 9.15.3.
-MAXIMUM FLOOR LIVE LOAD OF 2.4kPa. (50psf.) PER FLOOR, AND MAX. LENGTH OF SUPPORTED FLOOR JOISTS IS 4.9m (16'-1").
-REFER TO SOILS REPORT FOR SOIL CONDITIONS AND BEARING CAPACITY.

STRIP FOOTING SUPPORTING EXTERIOR WALLS (FOR W.O.B.)
-ASSUMING MASONRY VENEER CONSTRUCTION, MAX. FLOOR LIVE LOAD OF 2.4kPa. (50psf.) PER FLOOR, AND MAX. LENGTH OF SUPPORTED FLOOR JOISTS IS 4.9m (16'-1"). THE STRIP FOOTING SIZE IS AS FOLLOWS:
2 STOREY WITH WALK-OUT BASEMENT 545x175 (22"x7")

(6.) **FOUNDATION DRAINAGE OBC. 9.14.2. & 9.14.3.**
100mm (4") DIA. FOUNDATION DRAINAGE TILE 150mm (6") CRUSHED STONE OVER AND AROUND DRAINAGE TILES.

(7.) **BASEMENT SLAB OBC. 9.3.1.6.(1)(b), 9.16.4.5.(1), 9.25.3.3.(15)**
80mm (3")MIN. 25MPa (3600psi) CONC. SLAB ON 100mm (4") COARSE GRANULAR FILL, OR 20MPa. (3000psi) CONC. WITH DAMPPROOFING BELOW SLAB. UNDER SLAB INSULATION PER SB-12. ALL SLAB JOINTS & PENETRATIONS TO BE CAULKED.

(8.) **EXPOSED FLOOR TO EXTERIOR (SB-12-TABLE 3.1.1.2.A)**
PROVIDE RSI 5.46 (R31) INSULATION, APPROVED VAPOUR BARRIER AND CONTINUOUS AIR BARRIER, FINISHED SOFFIT.

(9.) **ATTIC INSULATION (SB-12-TABLE 3.1.1.2.A) (SB-12-3.1.1.8)**
RSI 10.56 (R60) BLOWN IN ROOF INSULATION AND APPROVED VAPOUR BARRIER, 16mm (5/8") INT. DRYWALL FINISH OR APPROVED EQUAL. RSI 3.52 (R20) MIN. ABOVE INNER SURFACE OF EXTERIOR WALL

(10.) **ALL STAIRS/EXTERIOR STAIRS –OBC. 9.8.–**

UNIFORM RISE	-5mm (1/4") MAX BETWEEN ADJACENT TREADS OR LANDINGS -10mm (1/2") MAX BETWEEN TALLEST & SHORTEST RISE IN FLIGHT
MAX. RISE	= 200 (7-7/8")
MIN. RUN	= 210 (8-1/4")
MIN. TREAD	= 235 (9-1/4")
MAX. NOSING	= 25 (1")
MIN. HEADROOM	= 1950 (6'-5")
RAIL @ LANDING	= 900 (2'-11")
RAIL @ STAIR	= 865 (2'-10") to 965 (3'-2")
MIN. STAIR WIDTH	= 860 (2'-10")
FOR CURVED STAIRS	
MIN. RUN	= 150 (6")
MIN. AVG. RUN	= 200 (8")

HANDRAILS –OBC. 9.8.7.–
(11.) FINISHED RAILING ON PICKETS SPACED MAXIMUM 100mm (4") BETWEEN PICKETS. CLEARANCE BETWEEN HANDRAIL AND SURFACE BEHIND IT TO BE 50 (2") MIN. HANDRAILS TO BE CONTINUOUS EXCEPT FOR NEWEL POST AT CHANGES OF DIRECTION .

INTERIOR GUARDS –OBC. 9.8.8.–
INTERIOR GUARDS: 900mm (2'-11") MIN. HIGH
EXTERIOR GUARDS – OBC. 9.8.8.
900mm (36") HIGH GUARD WHERE DISTANCE FROM PORCH TO FIN. GRADE IS LESS THAN 1800mm (71"). 1070mm (42") HIGH GUARD IS REQUIRED WHERE DISTANCE EXCEEDS 1800mm (71").

(12.) **SILL PLATE – OBC. 9.23.7.**
38x89 (2"x4") SILL PLATE WITH 13mm (1/2") DIA. ANCHOR BOLTS 200mm (8") LONG, EMBEDDED MIN. 100mm (4") INTO CONC. @ 2400mm (7'-10") O.C., CAULKING OR 25 (1") MIN. MINERAL WOOL BETWEEN PLATE AND TOP OF FDTN. WALL.
USE NON-SHRINK GROUT TO LEVEL SILL PLATE WHEN REQUIRED.

(13.) **BASEMENT INSULATION (SB-12-3.1.1.7), 9.25.2.3, 9.13.2.6)**
FOUNDATION WALLS ENCLOSING HEATED SPACE SHALL BE INSULATED FROM THE UNDERSIDE OF THE SUBFLOOR TO NOT MORE THAN 200mm (8") ABOVE THE FINISHED FLOOR & NO CLOSER THAN 50mm (2") OF THE BASEMENT SLAB. RSI3.52ci (R20ci) BLANKET INSULATION TO HAVE APPROVED VAPOUR BARRIER. RECOMMEND DAMPPROOF WITH BUILDING PAPER BETWEEN THE FOUNDATION WALL AND INSULATION UP TO GRADE LEVEL. NOTE: FULL HEIGHT INSULATION AT COLD CELLAR WALLS. AIR BARRIER TO BE SEALED TO FOUNDATION WALL WITH CAULKING. CONTINUOUS INSULATION (ci) IS NOT TO BE INTERRUPTED BY FRAMING.

(14.) **BEARING STUD PARTITION**
38x89 (2"x4") STUDS @ 400mm (16") O.C. 38x89 (2"x4") SILL PLATE ON DAMPPROOFING MATERIAL. 13mm (1/2") DIA. ANCHOR BOLTS 200mm (8") LONG, EMBEDDED MIN. 100mm (4") INTO CONC. @ 2400mm (7'-10") O.C. 100mm (4") HIGH CONC. CURB ON 350x155 (14"x6") CONC. FOOTING. ADD HORIZ. BLOCKING AT MID-HEIGHT IF WALL IS UNFINISHED.

(15.) **STEEL BASEMENT COLUMN (SEE O.B.C. 9.15.3.3)**
89mm(3-1/2") DIA x 3.0mm(0.118) SINGLE WALL TUBE TYPE 2 ADJUSTABLE STL. COL. W/ MIN. CAPACITY OF 71.2kN (16,000lbs.) AT A MAX. EXTENSION OF 2318mm (7'-7 1/2") CONFORMING TO CAN/CGSB-7.2-94, AND WITH 150x150x9.5 (6"x6"x3/8") STL. PLATE TOP & BOTTOM. 870x870x410 (34"x34"x16") CONC. FOOTING ON UNDISTURBED SOIL OR ENGINEERED FILL CAPABLE OF SUSTAINING A PRESSURE OF 150 Kpa. MINIMUM AND AS PER SOILS REPORT.

(15A) **STEEL BASEMENT COLUMN (SEE O.B.C. 9.15.3.3)**
89mm(3-1/2") DIA x 4.78mm(.188) FIXED STL. COL. WITH 150x150x9.5 (6"x6"x3/8") STL. TOP & BOTTOM PLATE ON 1070x1070x460 (42"x42"x18"). CONC. FOOTING ON UNDISTURBED SOIL OR ENGINEERED FILL CAPABLE OF SUSTAINING A PRESSURE OF 150 Kpa. MIN. AND AS PER SOILS REPORT.

(15B) **STEEL COLUMN**
90mm(3-1/2") DIA x 4.78mm(.188) NON-ADJUSTABLE STL. COL. TO BE ON 150x150x9.5 (6"x6"x3/8") STEEL TOP PLATE, & BOTTOM PLATE. BASE PLATE 120x250x12.5 (4 1/2"x10"x1/2") WITH 2-12mm DIA. x 300mm LONG x50mm HOOK ANCHORS (2-1/2"x12"x2") FIELD WELD COL. TO BASE PLATE.

(16.) BEAM POCKET OR 300x150 (12"x6") POURED CONC. NIB WALLS. MIN. BEARING 90mm (3-1/2")

(17.) 19x64 (1"x3") CONTINUOUS WOOD STRAPPING BOTH SIDES OF STEEL BEAM.

(18.) **GARAGE SLAB**
100mm (4") 32MPa (4640psi) CONC. SLAB WITH 5-8% AIR ENTRAINMENT ON OPT. 100 (4") COARSE GRANULAR FILL WITH COMPACTED SUB-BASE OR COMPACTED NATIVE FILL. SLOPE TO FRONT.

(19.) **GARAGE CEILINGS/INTERIOR WALLS**
13mm (1/2") GYPSUM BOARD ON WALL AND CEILING BETWEEN HOUSE AND GARAGE. TAPE AND SEAL ALL JOINTS AIRTIGHT PER O.B.C. 9.10.9.16. WALLS (R22), CEILINGS (R31). REFER TO SB-12, TABLE 3.1.1.2.A. FOR REQUIRED THERMAL INSULATION.

(20.) DOOR AND FRAME GASPROOFED. DOOR EQUIPPED WITH SELF CLOSING DEVICE AND WEATHERSTRIPPING PER OBC 9.10.13.15.

(21.) **EXTERIOR STEP**
PRECAST CONCRETE STEP OR WOOD STEP WHERE NOT EXPOSED TO WEATHER. MAX. RISE 200mm (7-7/8") MIN. TREAD 250mm (9-1/2"). SEE OBC. 9.8.9.2., 9.8.9.3. & 9.8.10.

(22.) **DRYER EXHAUST (OBC-6.2.3.8.(7) & 6.2.4.11.)**
CAPPED DRYER EXHAUST VENTED TO EXTERIOR.
(USE 100mm (4") DIA. SMOOTH WALL VENT PIPE)

(23.) **INSULATED ATTIC ACCESS (OBC-9.19.2.1. & SB12-3.1.1.8)**
ATTIC ACCESS HATCH WITH MIN. DIMENSION OF 545x610mm (21 1/2"x24") & A MIN. AREA OF 0.32 SQ.M. (3.44 SQ.FT.) WITH WEATHERSTRIPPING. RSI 3.52 (R20) RIGID INSUL. BACKING.

(24.) **FIREPLACE CHIMNEYS OBC. 9.21.**
TOP OF FIREPLACE CHIMNEY SHALL BE 915mm (3'-0") ABOVE THE HIGHEST POINT AT WHICH IT COMES IN CONTACT WITH THE ROOF AND 610mm (2'-0") ABOVE THE ROOF SURFACE WITHIN A HORIZ. DISTANCE OF 3050mm (10'-0") FROM THE CHIMNEY.

(25.) LINEN CLOSET, 4 SHELVES MIN. 350mm (14") DEEP.

(26.) MECHANICAL EXHAUST FAN, VENTED TO EXTERIOR AS REQUIRED BY OBC. 9.32.3.5. & 9.32.3.10.

(27.) **STEEL BEARING PLATE FOR MASONRY WALLS**
280x280x16 (11"x11"x5/8") STL. PLATE FOR STL BEAMS AND 280x280x12 (11"x11"x1/2") STL. PLATE FOR WOOD BEAMS BEARING ON CONC. BLOCK PARTYWALL. ANCHORED WITH 2-19mm (3/4") x 200mm (8") LONG GALV. ANCHORS WITHIN SOLID BLOCK COURSE. LEVEL WITH NON-SHRINK GROUT.
OR
SOLID WOOD BEARING FOR WOOD STUD WALLS
SOLID BEARING TO BE AT LEAST AS WIDE AS THE SUPPORTED MEMBER. SOLID WOOD BEARING COMPRISED OF BUILT-UP WOOD STUDS TO BE CONSTRUCTED IN ACCORDANCE WITH OBC 9.17.4.2(2).

(28.) RESERVED

(29.) **BEARING WOOD POST (BASEMENT) (OBC 9.17.4.)**
3-38x140 (3-2"x6") BUILT-UP-POST ON METAL BASE SHOE ANCHORED TO CONC. WITH 12.7 DIA. BOLT, 610x610x300 (24"x24"x12") CONC. FOOTING.

(30.) **STEPPED FOOTINGS OBC 9.15.3.9.**
MIN. HORIZ. STEP = 600mm (24").
MAX. VERT. STEP = 600mm (24")

(31.) **SLAB ON GRADE**
MIN. 100mm (4") CONCRETE SLAB ON GRADE ON 100mm (4") COARSE GRANULAR FILL. REINFORCED WITH 6x6-W2.9xW2.9 MESH PLACED NEAR MID-DEPTH OF SLAB. CONC. STRENGTH 32 MPa (4640 psi) WITH 5-8% AIR ENTRAINMENT ON COMPACTED SUB-GRADE. WHERE REQUIRED, REFER TO OBC SB-12, TABLE 3.1.1.2.A. FOR REQUIRED MINIMUM INSULATION UNDER SLAB.

(32.) **DIRECT VENTING GAS FURNACE/ H.W.T VENT**
DIRECT VENT FURNACE TERMINAL MIN. 900mm (36") FROM A GAS REGULATOR. MIN. 300mm (12") ABOVE FIN. GRADE, FROM ALL OPENINGS, EXHAUST AND INTAKE VENTS. HRV INTAKE TO BE A MIN. OF 1830mm (6'-0") FROM ALL EXHAUST TERMINALS. REFER TO GAS UTILIZATION CODE.

(33.) **DIRECT VENTING GAS FIREPLACE VENT**
DIRECT VENT GAS FIREPLACE. VENT TO BE A MINIMUM 300mm (12") FROM ANY OPENING AND ABOVE FIN. GRADE. REFER TO GAS UTILIZATION CODE.

(34.) **SUBFLOOR, JOIST STRAPPING AND BRIDGING**
16mm (5/8") T & G SUBFLOOR ON WOOD FLOOR JOISTS. FOR CERAMIC TILE APPLICATION (* SEE OBC 9.30.6. *) 6mm (1/4") PANEL TYPE UNDERLAY UNDER RESILIENT & PARQUET FLOORING. (* SEE OBC 9.30.2.*)
FLOOR JOISTS WITH SPANS OVER 2100mm (6'-11") TO BE BRIDGED WITH 38x38 (2"x2") CROSS BRACING OR SOLID BLOCKING @ 2100mm (6'-11") O.C. MAX. AND WHERE SPECIFIED BY JOIST TABLES A-1 OR A-2 STRAPPING SHALL BE 19x64 (1"x3") @ 2100mm (6'-11") O.C. UNLESS A PANEL TYPE CEILING FINISH IS APPLIED.
(* SEE OBC 9.23.9.4. *)

(35.) **EXPOSED BUILDING FACE OBC. 9.10.15. & SB-2-2.3.5.(2)**
EXTERIOR WALLS TO HAVE A FIRE RESISTANCE RATING OF NOT LESS THAN 45 min. WHERE LIMITING DISTANCE (LD) IS LESS THAN 1.2M (3'-11"). WHERE THE LD IS LESS THAN 600mm (1'-11") THE EXPOSING FACE SHALL BE CLAD IN NON-COMBUSTIBLE MATERIAL. SEE ELEVATIONS FOR ADDITIONAL NOTES. OFFENDING GARAGE WALLS INCLUDED.

(36.) **COLD CELLAR PORCH SLAB (OBC 9.39.)**
FOR MAX. 2500mm (8'-2") PORCH DEPTH (SHORTEST DIM.), 125mm (5") 32MPa (4640psi) CONC. SLAB WITH 5-8% AIR ENTRAINMENT. REINF. WITH 10M BARS @ 200mm (7 7/8") O.C. EACH WAY IN BOTTOM THIRD OF SLAB, MIN. 30mm (1 1/4") COVER. 600x600 (23 5/8"x23 5/8") 10M DOWELS @ 600mm (23 5/8") O.C., ANCHORED IN PERIMETER FDTN. WALLS. SLOPE SLAB MIN. 1.0% FROM HOUSE WALL. SLAB TO HAVE MIN. 75mm (3") BEARING ON FDTN. WALLS. PROVIDE (L7) LINTEL OVER CELLAR DOOR WITH 100mm (4") END BEARING.

(37.) THE FDTN. WALL SHALL NOT BE REDUCED TO LESS THAN 90mm (3-1/2") THICK TO A MAX. DEPTH OF 600mm (24") AND SHALL BE TIED TO THE FACING MATERIAL WITH METAL TIES SPACED 200mm (8") O.C. VERTICALLY AND 900mm (36") O.C. HORIZONTALLY. FILL SPACE BETWEEN WALL AND FACING SOLID WITH MORTAR.

(38.) **CONVENTIONAL ROOF FRAMING (2.0Kpa. SNOW LOAD)**
38x140 (2"x6") RAFTERS @ 400mm (16"O.C.) FOR MAX 11'-7" SPAN, 38x184 (2"x8") RIDGE BOARD. 38x89 (2"x4") COLLAR TIES AT MIDSPANS. CEILING JOISTS TO BE 38x89 (2"x4") @ 400mm (16") O.C. FOR MAX. 2830mm (9'-3") SPAN & 38x140 (2"x6") @ 400 (16") O.C. FOR MAX. 4450mm (14'-7") SPAN.
RAFTERS FOR BUILT-UP ROOF TO BE 38x89 (2"x4") @ 600mm (24") O.C. WITH A 38x89 (2"x4") CENTRE POST TO THE TRUSS BELOW, LATERALLY BRACED @ 1800mm (6'-0") O.C. VERTICALLY.

GENERAL NOTES

WINDOWS:
1) **MINIMUM BEDROOM WINDOW –OBC. 9.9.10.1.–**
AT LEAST ONE BEDROOM WINDOW ON A GIVEN FLOOR IS TO HAVE MIN. 0.35m2 UNOBSTRUCTED GLAZED OR OPENABLE AREA WITH MIN. CLEAR WIDTH OF 380 mm (1'-3").
2) **WINDOW GUARDS –OBC. 9.8.8.1.(6)**
A GUARD IS REQUIRED WHERE THE TOP OF THE WINDOW SILL IS LOCATED LESS THAN 480mm (1'-7") ABOVE FIN. FLOOR AND THE DISTANCE FROM THE FIN. FLOOR TO THE ADJACENT GRADE IS GREATER THAN 1800mm (5'-11")
3) **EXTERIOR WINDOWS**
SHALL COMPLY WITH OBC DIV.-B 9.7.3. & SB12-3.1.1.9

GENERAL:
1) MECHANICAL VENTILATION IS REQUIRED TO COMPLY WITH OBC-DIV. B, 6.2.2. SEE MECHANICAL DRAWINGS.
2) ALL DOWNSPOUTS TO DRAIN AWAY FROM THE BUILDING AS PER OBC 9.26.18.2. & 5.6.2.2.(3) AND MUNICIPAL STANDARDS.
3) ALL WINDOW WELLS TO DRAIN TO FOOTING LEVEL PER OBC 9.14.6.3. CHECK WITH THE LOCAL AUTHORITY.
4) STUD WALL REINFORCEMENT FOR FUTURE GRAB BARS IN MAIN BATHROOM
REINFORCEMENT OF STUD WALLS SHALL BE INSTALLED ADJACENT TO WATER CLOSETS AND SHOWER OR BATHTUB IN MAIN BATHROOM. REFER TO OBC. 9.5.2.3, 3.8.3.8.(1)(d) & 3.8.3.13.(1)(f). SEE DETAIL.
5) ALL EXTERIOR DOORS TO COMPLY WITH THERMAL RESISTANCE AS STATED IN O.B.C. SB-12-3.1.1.9.
6) ALL AIR BARRIER SYSTEMS ARE REQUIRED TO COMPLY WITH O.B.C. DIV.-B 9.25.3.

LUMBER:
1) ALL LUMBER SHALL BE SPRUCE NO.2 GRADE, UNLESS NOTED OTHERWISE.
2) STUDS SHALL BE STUD GRADE SPRUCE, UNLESS NOTED OTHERWISE.
3) LUMBER EXPOSED TO THE EXTERIOR TO BE SPRUCE No.2 GRADE PRESSURE TREATED OR CEDAR, UNLESS NOTED OTHERWISE.
4) ALL LAMINATED VENEER LUMBER (L.V.L.) BEAMS, GIRDER TRUSSES, AND METAL HANGER CONNECTIONS SUPPORTING ROOF FRAMING TO BE DESIGNED & CERTIFIED BY TRUSS MANUFACTURER.
5) LVL BEAMS SHALL BE 2.0E -2950Fb MIN.. NAIL EACH PLY OF LVL WITH 89mm (3 1/2") LONG COMMON WIRE NAILS @ 300mm (12") O.C. STAGGERED IN 2 ROWS FOR 184, 240 & 300mm (7 1/4",9 1/2", 11 7/8") DEPTHS AND STAGGERED IN 3 ROWS FOR GREATER DEPTHS AND FOR 4 PLY MEMBERS ADD 13mm (1/2") DIA. GALVANIZED BOLTS BOLTED AT MID-DEPTH OF BEAM @ 915mm (3'-0") O.C.
6) PROVIDE FACE MOUNT BEAM HANGERS TYPE "SCL" MANUFACTURED BY SIMPSON STRONG-TIE OR EQUAL FOR ALL LVL BEAM TO BEAM CONNECTIONS UNLESS OTHERWISE NOTED. REFER TO ENG. FLOOR LAYOUTS.
7) JOIST HANGERS: PROVIDE METAL HANGERS FOR ALL JOISTS AND BUILT-UP WOOD MEMBERS INTERSECTING FLUSH BUILT-UP WOOD MEMBERS.
8) WOOD FRAMING NOT TREATED WITH A WOOD PRESERVATIVE, IN CONTACT WITH CONCRETE, SHALL BE SEPARATED FROM THE CONCRETE BY AT LEAST 2 mil. POLYETHYLENE FILM, No. 50 (45lbs.) ROLL ROOFING OR OTHER DAMPPROOFING MATERIAL. EXCEPT WHERE THE WOOD MEMBER IS AT LEAST 150mm (6") ABOVE THE GROUND.

STEEL:
1) STRUCTURAL STEEL SHALL CONFORM TO CAN/CSA-G40-21 GRADE 300W. HOLLOW STRUCTURAL SECTIONS SHALL CONFORM TO CSA-G40.21 GRADE 350W "STRUCTURAL QUALITY STEEL". OBC. B-9.23.4.3.
2) REINFORCING STEEL SHALL CONFORM TO CSA-G30-18M GRADE 400R.

STUCCO:
1) ALL STUCCO WALLS TO HAVE A MINIMUM 10mm AIR SPACE BEHIND THE CLADDING WITH POSITIVE DRAINAGE TO THE EXTERIOR. THE EXTERIOR SHEATHING MUST NOT BE GYPSUM BASED. ALL STUCCO TO BE INSTALLED AS PER MANUFACTURERS SPECIFICATIONS.

LEGEND

	CLASS 'B' VENT		EXHAUST FAN TO EXTERIOR
	DUPLEX OUTLET (12" ABOVE SURFACE)		DUPLEX OUTLET (HEIGHT A.F.F)
WP	WEATHERPROOF DUPLEX OUTLET	GFI	GFI DUPLEX OUTLET (HEIGHT A.F.F)
PL	POT LIGHT		HEAVY DUTY OUTLET (220 volt)
PC	LIGHT FIXTURE (PULL CHAIN)		LIGHT FIXTURE (CEILING MOUNTED)
	SWITCH		LIGHT FIXTURE (WALL MOUNTED)
FD	FLOOR DRAIN	HB	HOSE BIB (NON-FREEZE)
SJ	SINGLE JOIST	P.T.	PRESSURE TREATED LUMBER
DJ	DOUBLE JOIST	G.T.	GIRDER TRUSS BY ROOF TRUSS MANUF.
TJ	TRIPLE JOIST		
LVL	LAMINATED VENEER LUMBER		
PL	POINT LOAD FROM ABOVE		
F.A.	FLAT ARCH	C.A.	CURVED ARCH
M.C.	MEDICINE CABINET (RECESSED)		
	DOUBLE VOLUME WALL. SEE NOTE 39		CONCRETE BLOCK WALL
SB	SOLID WOOD BEARING (SPRUCE No. 2). SOLID BEARING TO BE AS WIDE AS SUPPORTED MEMBER OR AS DIRECTED BY STRUCTURAL ENGINEER. SOLID BEARING TO BE MINIMUM 2 PIECES.		
SBFA	SOLID WOOD BEARING TO MATCH FROM ABOVE		

EVCS **ELECTRIC VEHICLE CHARGING SYSTEM (EVCS)**
ROUGH-IN FOR FUTURE ELECTRIC VEHICLE SUPPLY EQUIPMENT (CHARGING SYSTEM) TO BE INSTALLED.
ROUGH-IN SHALL INCLUDE:
- A minimum 200 amp Panelboard.
- Conduit that is not less than 1 1/16" (27mm) trade size.
- A square 4 11/16" (119mm) trade size electrical outlet box.
- Fumeproofed Electrical outlet box to be installed in the Garage or carport or adjacent to driveway.

REFER TO 2012 OBC. 9.34.4.

◆ **SOIL GAS/ RADON CONTROL (OBC 9.1.1.7. & 9.13.4.)**
PROVIDE CONSTRUCTION TO PREVENT LEAKAGE OF SOIL GAS INTO THE BUILDING IF REQUIRED.

CONTRACTOR MUST VERIFY ALL DIMENSIONS ON THE JOB AND REPORT ANY DISCREPANCY TO VA3 DESIGN BEFORE PROCEEDING WITH THE WORK. ALL DRAWINGS AND SPECIFICATIONS ARE INSTRUMENTS OF SERVICE AND THE PROPERTY OF VA3 DESIGN WHICH IF REQUESTED, MUST BE RETURNED AT THE COMPLETION OF THE WORK. ALL DRAWINGS TO BE USED FOR CONSTRUCTION ONLY AFTER BUILDING PERMIT HAS BEEN ISSUED.

(39.) **TWO STOREY VOLUME SPACES**
-FOR A MAXIMUM 5490 mm (18'-0") HEIGHT AND MAXIMUM SUPPORTED ROOF TRUSS LENGTH OF 6.0m, PROVIDE 2-38x140 (2-2"x6") SPR.#2 CONTIN. STUDS @ 300mm (12") O.C. (TRIPLE UP AT EVERY THIRD DOUBLE STUD FOR BRICK WALLS) C/W 9.6 (3/8") THICK EXT. PLYWOOD SHEATHING. PROVIDE SOLID WOOD BLOCKING BETWEEN WOOD STUDS @ 1220 mm (4'-0") O.C. VERTICALLY. -FOR WALLS WITH HORIZ. DISTANCES NOT EXCEEDING 2900 mm (9'-6"), PROVIDE 38x140 (2"x6") STUDS @ 400 (16") O.C. WITH CONTINUOUS 2-38x140 (2-2"x6")TOP PLATES + 1-38x140 (1-2"x6") BOTTOM PLATE & MINIMUM OF 3-38x184 (3-2"x8") CONT. HEADER AT GRND. CEILING LEVEL TOE-NAILED & GLUED AT TOP, BOTTOM PLATES AND HEADERS.

(40.) TYPICAL 1 HOUR RATED PARTY WALL.
REFER TO DETAILS FOR TYPE AND SPECIFICATIONS.

(41.) **FOUNDATION WALL (W.O.D./W.O.B.)**
- WHERE GRADE TO T/O BASEMENT SLAB EXCEEDS 1200mm (3'-11") A 250mm (10") WIDE FOUNDATION WALL IS REQUIRED.

(42.) **EXTERIOR WALLS FOR WALK-OUT CONDITIONS**
THE EXTERIOR BASEMENT STUD WALL TO BE 38x140 (2"x6") STUDS @ 400mm (16") o.c. OR 38x89 (2"x4") STUDS @ 300mm (12")o.c.

DRAIN WATER HEAT RECOVERY UNIT (DWHR)
PER SB12-3.1.1.12., A DRAIN WATER HEAT RECOVERY (DWHR) UNIT SHALL BE INSTALLED IN EACH DWELLING UNIT TO RECEIVE DRAIN WATER FROM ALL SHOWERS OR FROM AT LEAST TWO SHOWERS WHERE THERE ARE TWO OR MORE SHOWERS IN THE DWELLING UNIT. DOES NOT APPLY IF THERE ARE NO SHOWERS OR NO STOREY BENEATH ANY OF THE SHOWERS.

◆ REVISED ONT. REG. 332/12-2012 OBC
Amendment O. Reg. 139/17 JUNE 19, 2017

WOOD LINTELS AND BUILT-UP WOOD BEAMS

L1	2/38 x 184	(2/2" x 8")	SPR.#2
B1	3/38 x 184	(3/2" x 8")	SPR.#2
B2	4/38 x 184	(4/2" x 8")	SPR.#2
B7	5/38 x 184	(5/2" x 8")	SPR.#2
L3	2/38 x 235	(2/2" x 10")	SPR.#2
B3	3/38 x 235	(3/2" x 10")	SPR.#2
B4	4/38 x 235	(4/2" x 10")	SPR.#2
L5	2/38 x 286	(2/2" x 12")	SPR.#2
B5	3/38 x 286	(3/2" x 12")	SPR.#2
B6	4/38 x 286	(4/2" x 12")	SPR.#2

LOOSE STEEL LINTELS

L7	89 x 89 x 6.4L	(3-1/2" x 3-1/2" x 1/4"L)
L8	89 x 89 x 7.9L	(3-1/2" x 3-1/2" x 5/16"L)
L9	102 x 89 x 7.9L	(4" x 3-1/2" x 5/16"L)
L10	127 x 89 x 7.9L	(5" x 3-1/2" x 5/16"L)
L11	152 x 89 x 10.0L	(6" x 3-1/2" x 3/8"L)
L12	152 x 102 x 11.0L	(6"x 4" x 7/16"L)
L13	178 x 102 x 13.0L	(7"x 4" x 1/2"L)

LAMINATED VENEER LUMBER (LVL) BEAMS

LVL1A	1-1	3/4"x7 1/4"	(1-45x184)
LVL1	2-1	3/4"x7 1/4"	(2-45x184)
LVL2	3-1	3/4"x7 1/4"	(3-45x184)
LVL3	4-1	3/4"x7 1/4"	(4-45x184)
LVL4A	1-1	3/4"x9 1/2"	(1-45x240)
LVL4	2-1	3/4"x9 1/2"	(2-45x240)
LVL5	3-1	3/4"x9 1/2"	(3-45x240)
LVL5A	4-1	3/4"x9 1/2"	(4-45x240)
LVL6A	1-1	3/4"x11 7/8"	(1-45x300)
LVL6	2-1	3/4"x11 7/8"	(2-45x300)
LVL7	3-1	3/4"x11 7/8"	(3-45x300)
LVL8	4-1	3/4"x11 7/8"	(4-45x300)

DOOR SCHEDULE

(1.)	EXTERIOR DOOR	815 x 2030 x 45 (2'-8" x 6'-8" x 1-3/4") INSULATED MIN. RSI 0.7 (R4)
(1A)	EXTERIOR DOOR	865 x 2030 x 45 (2'-10" x 6'-8" x 1-3/4")
(1B)	EXTERIOR DOOR	915 x 2030 x 45 (3'-0" x 6'-8" x 1-3/4") INSULATED MIN. RSI 0.7 (R4)
(1C)	EXTERIOR DOOR	915 x 2438 x 45 (3'-0" x 8'-0" x 1-3/4") INSULATED MIN. RSI 0.7 (R4)
(1D)	EXTERIOR DOOR	860 x 2438 x 45 (2'-10" x 8'-0" x 1-3/4") INSULATED MIN. RSI 0.7 (R4)
(2.)	INTERIOR DOOR	815 x 2030 x 35 (2'-8" x 6'-8" x 1-3/8")
(2A)	EXTERIOR DOOR	815 x 2030 x 45 (2'-8" x 6'-8" x 1-3/4") 20 MIN. RATED DOOR AND FRAME, WITH APPROVED SELF CLOSING DEVICE.
(2B)	EXTERIOR DOOR	815 x 2030 x 45 (2'-8" x 6'-8" x 1-3/4") (WEATHER STRIPPING INSTALLED)
(2C)	INTERIOR DOOR	815 x 2438 x 45 (2'-8" x 8'-0" x 1-3/4")
(2D)	EXTERIOR DOOR	815 x 2438 x 45 (2'-8" x 8'-0" x 1-3/4") 20 MIN. RATED DOOR AND FRAME, WITH APPROVED SELF CLOSING DEVICE.
(3.)	INTERIOR DOOR	760 x 2030 x 35 (2'-6" x 6'-8" x 1-3/8")
(3A)	INTERIOR DOOR	710 x 2030 x 35 (2'-4" x 6'-8" x 1-3/8")
(3B)	INTERIOR DOOR	760 x 2438 x 35 (2'-6" x 8'-0" x 1-3/8")
(3C)	INTERIOR DOOR	710 x 2438 x 35 (2'-4" x 8'-0" x 1-3/8")
(4.)	INTERIOR DOOR	610 x 2030 x 35 (2'-0" x 6'-8" x 1-3/8")
(4A)	INTERIOR DOOR	660 x 2030 x 35 (2'-2" x 6'-8" x 1-3/8")
(4C)	INTERIOR DOOR	660 x 2438 x 35 (2'-2" x 8'-0" x 1-3/8")
(5.)	INTERIOR DOOR	460 x 2030 x 35 (1'-6" x 6'-8" x 1-3/8")
(6.)	EXTERIOR DOOR	815 x 2030 x 45 (2'-8" x 6'-8" x 1-3/4") SOLID WOOD CORE

MECHANICAL SYMBOLS

HP	HEAT PIPE	WA	WARM AIR
PL	PLUMBING (TOILET)	RA	RETURN AIR DUCT
PL	PLUMBING (BATH, SINK,SHOWER)		

■ SA **SMOKE ALARM (REFER TO OBC 9.10.19)**
PROVIDE 1 PER FLOOR, NEAR THE STAIRS CONNECTING THE FLOOR LEVEL AND ALSO 1 IN EACH BEDROOM NEAR HALL DOOR. ALARMS TO BE CONNECTED TO AN ELECTRICAL CIRCUIT AND INTERCONNECTED TO ACTIVATE ALL ALARMS IF 1 SOUNDS. BATTERY BACK-UP REQUIRED. SMOKE ALARMS TO INCORPORATE VISUAL SIGNALLING COMPONENT (9.10.19.3.(3)).

CMA **CARBON MONOXIDE ALARMS (OBC 9.33.4.)**
WHERE A FUEL-BURNING APPLIANCE IS INSTALLED IN A DWELLING UNIT, A CARBON MONOXIDE ALARM CONFORMING TO CAN./CSA-6.19 OR UL2034 SHALL BE INSTALLED ADJACENT TO EACH SLEEPING AREA. CARBON MONOXIDE DETECTOR(S) SHALL BE PERMANENTLY WIRED SO THAT ITS ACTIVATION WILL ACTIVATE ALL CARBON MONOXIDE DETECTORS AND BE EQUIPPED WITH AN ALARM THAT IS AUDIBLE WITHIN BEDROOMS WHEN THE INTERVENING DOORS ARE CLOSED. REFER TO MANUFACTURER FOR ADDDITIONAL REQUIREMENTS.

REFER TO UNIT DRAWINGS OR PAGE CN-2 FOR SB-12 COMPLIANCE PACKAGE A1 TO BE USED FOR THIS MODEL.
The minimum thermal performance of building envelope and equipment shall conform to the selected package unless otherwise noted.

2018 **A1**
VA3 REFERENCE NUMBER

no.	description	date	by
9	.	.	.
8	.	.	.
7	.	.	.
6	.	.	.
5	.	.	.
4	.	.	.
3	.	.	.
2	UPDATE TO 2018	JAN 11-18	RC
1	ISSUE FOR CLIENT REVIEW	AUG 04-17	RC

The undersigned has reviewed and takes responsibility for this design and has the qualifications and meets the requirements set out in the Ontario Building Code to be a Designer.
qualification information
Wellington Jno-Baptiste [signature] 25591
name signature BCIN
registration information
VA3 Design Inc. 42658

Contractor must verify all dimensions on the job and report any discrepancy to the Designer before proceeding with the work. All drawings and specifications are instruments of service and the property of the Designer which must be returned at the completion of the work. Drawings are not to be scaled.

VA3 DESIGN
255 Consumers Rd Suite 120
Toronto ON M2J 1R4
t 416.630.2255 f 416.630.4782
va3design.com

BAYVIEW WELLINGTON

CONST NOTE
-

project name: GREEN VALLEY EAST	municipality: BRADFORD
project no.: 16023	
date: MAY 2016	CONSTRUCTION NOTES
drawn by: RC	checked by: -
scale: 3/16" = 1'-0"	file name: 16023-CN-A1
drawing no.: CN1	

RICHARD – H:\ARCHIVE\WORKING\2016\16023.BW\Units\CN NOTES\16023-CN-A1.dwg – Thu – Jan 11 2018 – 10:08 AM

All drawings specifications, related documents and design are the copyright property of VA3 DESIGN. Reproduction of this property in whole or in part is strictly prohibited without VA3 DESIGN's written permission.

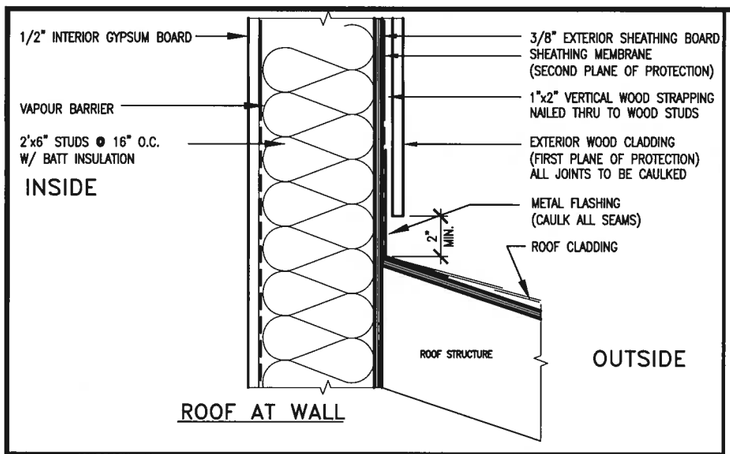

ROOF AT WALL

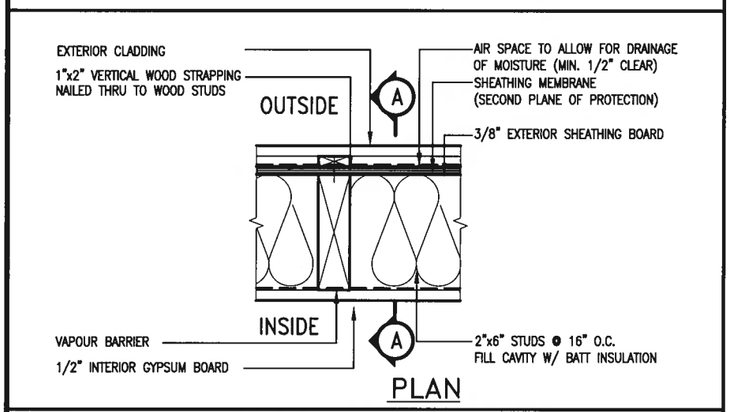

PLAN

EXTERIOR WOOD CLADDING WALL ASSEMBLY

STUD WALL REINFORCEMENT FOR FUTURE GRAB BARS IN MAIN BATHROOM

REINFORCEMENT OF STUD WALLS SHALL BE INSTALLED ADJACENT TO WATER CLOSETS AND SHOWER OR BATHTUB IN MAIN BATHROOM.
FUTURE GRAB BARS TO BE MOUNTED TO RESIST HORIZ. AND VERT. LOADS OF 1.3 KN (300 lb)
REFER TO OBC. DIV. B– 9.5.2.3.. WATER CLOSET 3.8.3.8.(3)(a) & 3.8.3.8.(3)(c).. SHOWER 3.8.3.13.(2)(f).. BATHTUB & 3.8.3.13.(4)(c). AND DETAILS PROVIDED.

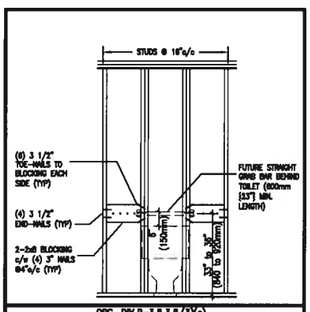

OBC. DIV.B–3.8.3.8.(3)(a)
QGB1 FUTURE GRAB BAR @ TOILET (BACK WALL)

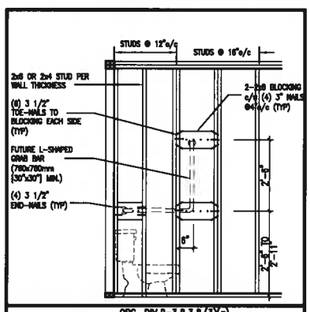

OBC. DIV.B–3.8.3.8.(3)(a)
QGB1A FUTURE L-SHAPE GRAB BAR DETAIL @ TOILET (*ONLY IF SIDE WALL PRESENT)

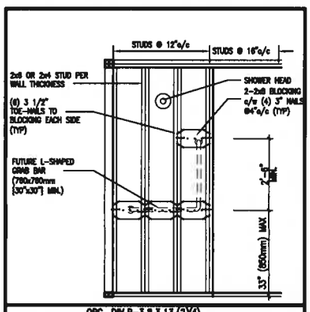

OBC. DIV.B–3.8.3.13.(2)(f)
QGB3 FUTURE L-SHAPE GRAB BAR DETAIL @ SHOWER (BACK WALL)

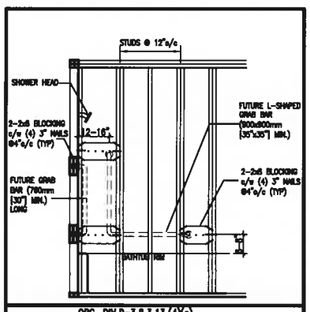

OBC. DIV.B–3.8.3.13.(4)(c)
QGB4 FUTURE GRAB BAR IN BATHTUB (SIDE VIEW)

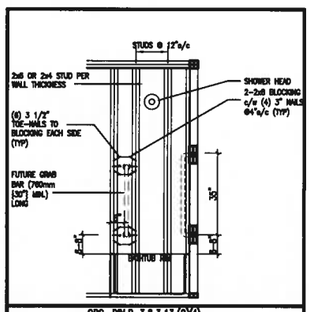

OBC. DIV.B–3.8.3.13.(2)(f)
QGB4A FUTURE GRAB BAR IN BATHTUB (VERTICAL BAR LOCATED @ EACH END WALL)

JAN 11,2018

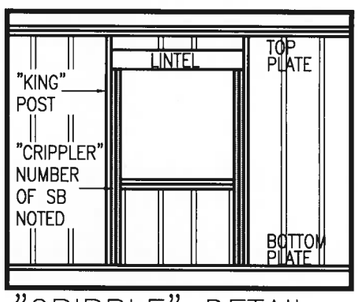

"CRIPPLE" DETAIL

MAX. HEIGHT FOR 2"x4" GARAGE WALL IS AS FOLLOW:
2"x4" @ 16" O.C. – 9–10"
2–2"x4" @ 12" O.C. – 10'–9"
3–2"x4" @ 16" O.C. – 11'–2"
3–2"x4" @ 12" O.C. – 12'–4"

NOTES:
1. FOR ROOF DESIGN SNOW LOAD OF UP TO 2.5 KPa. SUPPORTED ROOF TRUSS LENGTH OF 6.0m AND FLOOR JOIST LENGTH OF 2.5m OF ONE FLOOR.
2. PROVIDE HORIZONTAL SOLID BLOCKING @ 1200 O.C. (4'–0")
3. PROVIDE A MINIMUN OF 9.5mm (3/8") PLYWOOD OR OSB EXTERIOR SHEATHING ON THE EXTERIOR FACE.
4. FOR A 1/50 YEAR REFERENCE WIND PRESSURE OF 0.6 KPa.
5. STUDS GREATER THAN 9'–10" HIGH TO BE No. 2 SPF
6. STUD SPECIFICATION IS SUITABLE FOR BRICK VENEER OR SIDING.

** MAX. HEIGHT FOR 2"x6" EXTERIOR WALL IS AS FOLLOW:
2"x6" @ 16" O.C. – 12'–6"
2"x6" @ 12" O.C. – 13'–10"
2–2"x6" @ 16" O.C. – 15'–0"
2–2"x6" @ 12" O.C. – 17'–4"

MAX. HEIGHT FOR 2"x8" EXTERIOR WALL IS AS FOLLOWS:
2"x8" @ 16" O.C. – 16'–0"
2"x8" @ 12" O.C. – 17'–9"
2–2"x8" @ 16" O.C. – 20'–4"
2–2"x8" @ 12" O.C. – 22'–4"

NOTES:
1. FOR ROOF DESIGN SNOW LOAD OF UP TO 2.5 KPa
2. SUPPORTED ROOF TRUSS LENGTH OF 6.0m ONLY.
3. PROVIDE HORIZONTAL SOLID BLOCKING @ 1200 O.C. (4'–0")
4. PROVIDE A MINIMUM OF 9.5mm (3/8") PLYWOOD OR OSB EXTERIOR SHEATHING ON THE EXTERIOR FACE AND 12.5mm (1/2") GYPSUM BOARD ON THE INTERIOR FACE.
5. WALL FRAMING SHALL CONFORM TO OBC 9.23.10.1.(2)
6. FOR A 1/50 YEAR REFERENCE WIND PRESSURE OF 0.6 KPa
7. STUDS GREATER THAN 9'–10" HIGH TO BE No. 2 SPF.
8. STUD SPECIFICATION IS SUITABLE FOR BRICK VENEER OR SIDING.

** STUD INFORMATION TAKEN FROM OBC TABLE A–30

no.	description	date	by
9	.	.	.
8	.	.	.
7	.	.	.
6	.	.	.
5	.	.	.
4	.	.	.
3	.	.	.
2	UPDATE TO 2018	JAN 11–18	RC
1	ISSUE FOR CLIENT REVIEW	AUG 04–17	RC

The undersigned has reviewed and takes responsibility for this design and has the qualifications and meets the requirements set out in the Ontario Building Code to be a Designer.
qualification information
name: Wellington Jno–Baptiste — signature — BCIN 25591
registration information: VA3 Design Inc. — 42658

Contractor must verify all dimensions on the job and report any discrepancy to the Designer before proceeding with the work. All drawings and specifications are instruments of service and the property of the Designer which must be returned at the completion of the work. Drawings are not to be scaled.

VA3 DESIGN
255 Consumers Rd Suite 120
Toronto ON M2J 1R4
t 416.630.2255 f 416.630.4782
va3design.com

BAYVIEW WELLINGTON

CONST NOTE –

project name: GREEN VALLEY EAST
municipality: BRADFORD
project no. 16023
date: MAY 2016
CONSTRUCTION NOTES
drawn by: RC
checked by: –
scale: 3/16" = 1'–0"
file name: 16023–CN–A1
drawing no. CN2

RICHARD – H:\ARCHIVE\WORKING\2016\16023.BW\Units\CN NOTES\16023-CN-A1.dwg – Thu – Jan 11 2018 – 10:08 AM

All drawings specifications, related documents and design are the copyright property of VA3 DESIGN. Reproduction of this property in whole or in part is strictly prohibited without VA3 DESIGN's written permission.

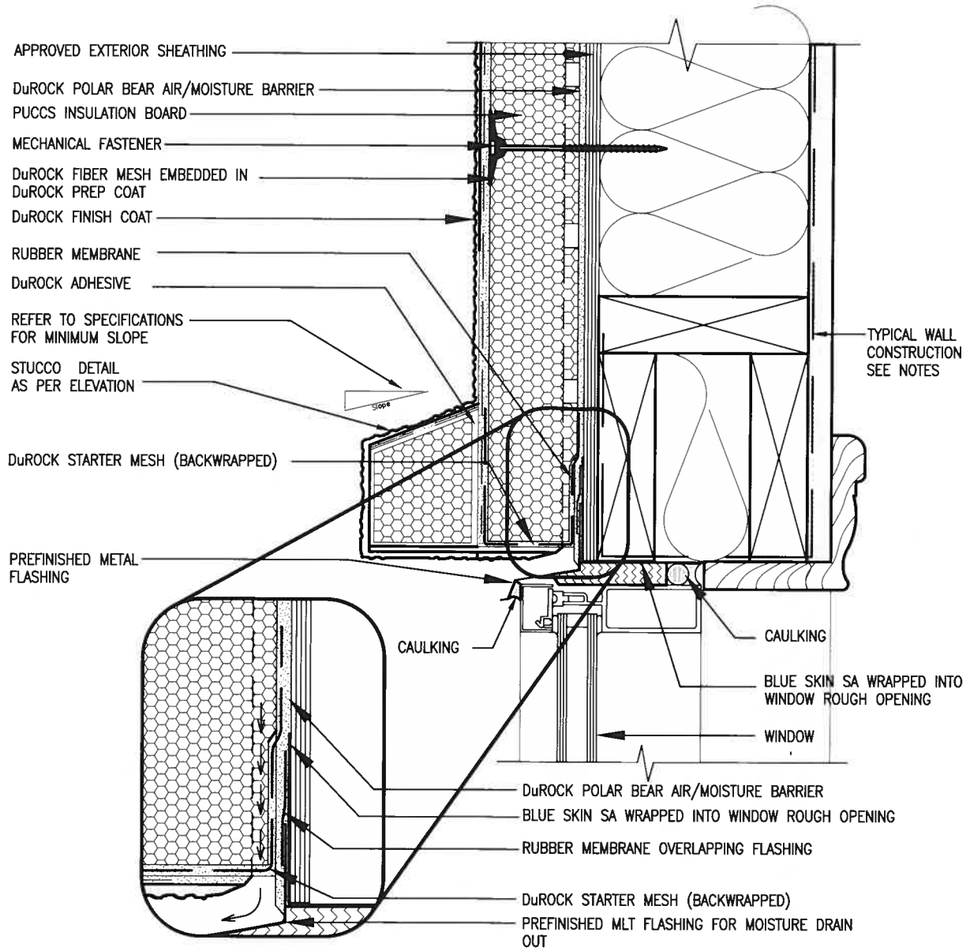

1 / CN3 WINDOW HEADER

SCALE: 3"=1'-0"

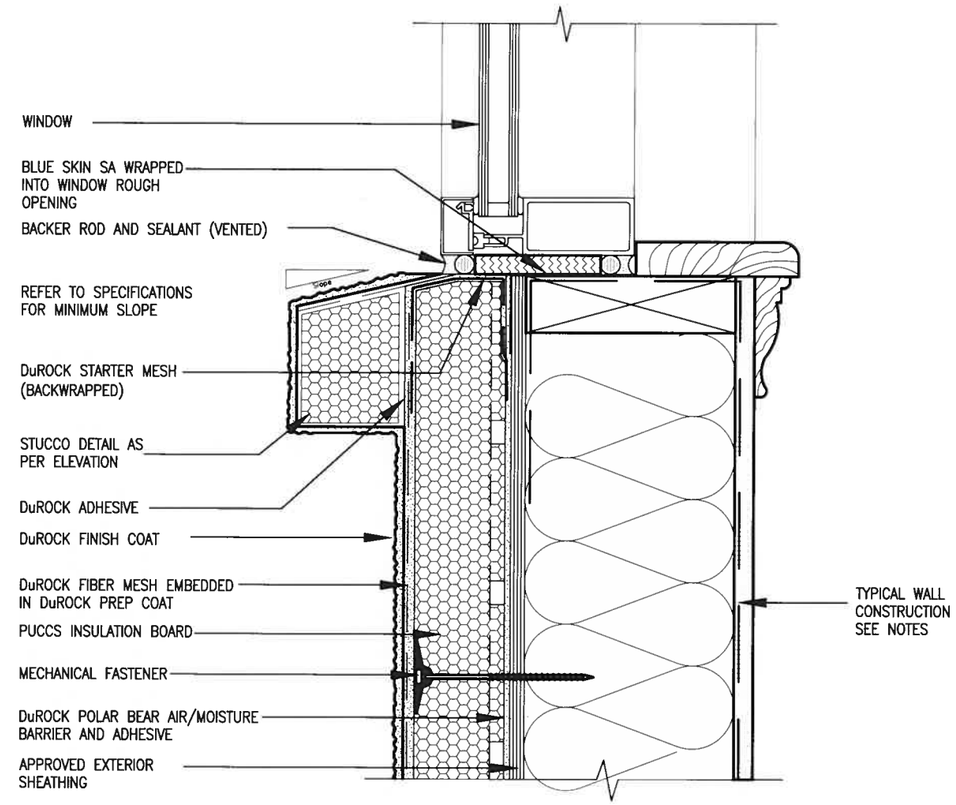

2 / CN3 WINDOW SILL

SCALE: 3"=1'-0"

ALL STUCCO WALLS TO HAVE A MINIMUM 10mm AIR SPACE BEHIND THE CLADDING WITH POSITIVE DRAINAGE TO THE EXTERIOR. THE EXTERIOR SHEATHING MUST NOT BE GYPSUM BASED. ALL STUCCO TO BE INSTALLED AS PER MANUFACTURERS SPECIFICATIONS.
DETAILS ARE BASED ON DuROCK PUCCS SYSTEM

CONST NOTE

project no. 16023

BAYVIEW WELLINGTON

municipality BRADFORD

project name GREEN VALLEY EAST

CONSTRUCTION NOTES

drawing no. CN3

date MAY 2016 | drawn by RC | checked by - | scale 3/16" = 1'-0" | file name 16023-CN-A1

RICHARD - H:\ARCHIVE\WORKING\2016\16023\16023.BW\Units\CN NOTES\16023-CN-A1.dwg - Thu - Jan 11 2016 - 10:09 AM

VA3 DESIGN
255 Consumers Rd Suite 120
Toronto ON M2J 1R4
t 416.630.2255 f 416.630.4782
va3design.com

The undersigned has reviewed and takes responsibility for this design and has the qualifications and meets the requirements set out in the Ontario Building Code to be a Designer.

qualification information
Wellington Jno-Baptiste 25591 BCIN
name signature
registration information
VA3 Design Inc. 42658

Contractor must verify all dimensions on the job and report any discrepancy to the Designer before proceeding with the work. All drawings and specifications are instruments of service and the property of the Designer which must be returned at the completion of the work. Drawings are not to be scaled.

no.	description	date	by
9	-	-	-
8	-	-	-
7	-	-	-
6	-	-	-
5	-	-	-
4	-	-	-
3	-	-	-
2	UPDATE TO 2018	JAN 11-18	RC
1	ISSUE FOR CLIENT REVIEW	AUG 04-17	RC

All drawings specifications, related documents and design are the copyright property of VA3 DESIGN. Reproduction of this property in whole or in part is strictly prohibited without VA3 DESIGN's written permission.

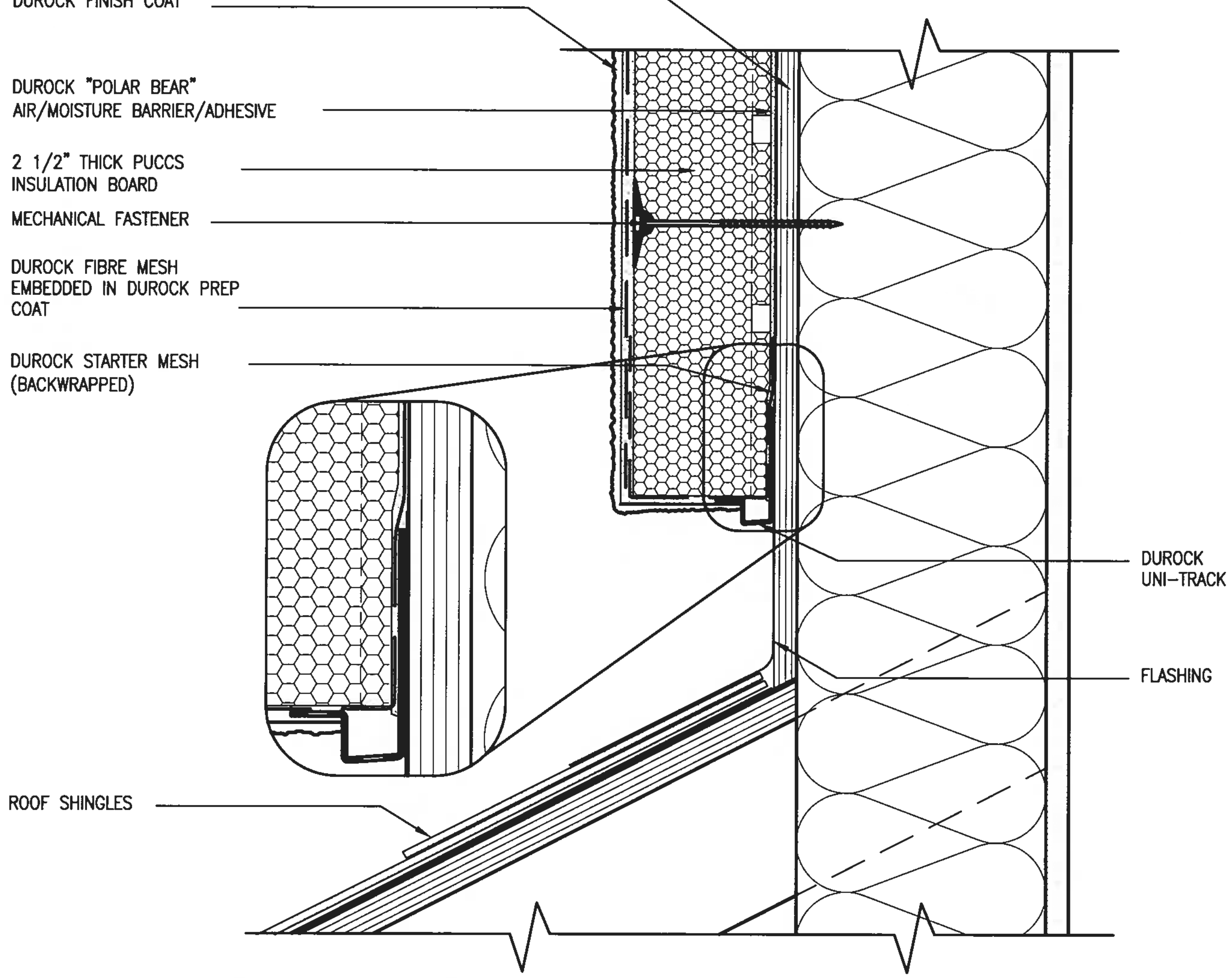

3
CN4
STUCCO TERMINATION @ ROOF
SCALE: 3"=1'-0"

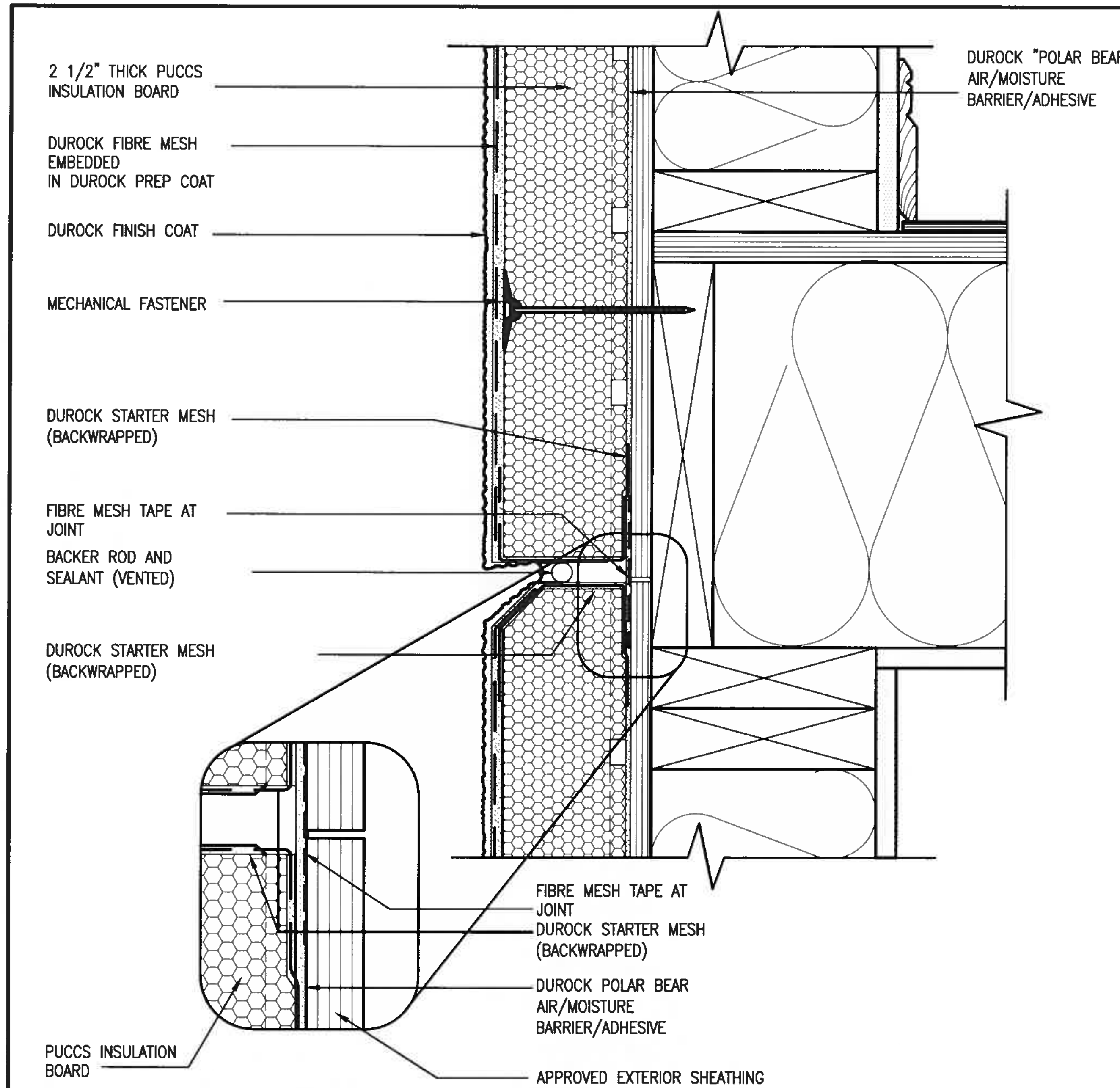

4
CN4
HORIZONTAL EXPANSION JOINT
SCALE: 3"=1'-0"

ALL STUCCO WALLS TO HAVE A MINIMUM 10mm AIR SPACE BEHIND THE CLADDING WITH POSITIVE DRAINAGE TO THE EXTERIOR. THE EXTERIOR SHEATHING MUST NOT BE GYPSUM BASED. ALL STUCCO TO BE INSTALLED AS PER MANUFACTURERS SPECIFICATIONS.
DETAILS ARE BASED ON DuROCK PUCCS SYSTEM

no.	description	date	by
9	.	.	.
8	.	.	.
7	.	.	.
6	.	.	.
5	.	.	.
4	.	.	.
3	.	.	.
2	UPDATE TO 2018	JAN 11-18	RC
1	ISSUE FOR CLIENT REVIEW	AUG 04-17	RC

The undersigned has reviewed and takes responsibility for this design and has the qualifications and meets the requirements set out in the Ontario Building Code to be a Designer.
qualification information
Wellington Jno-Baptiste (signature) 25591
name signature BCIN
registration information
VA3 Design Inc. 42658

Contractor must verify all dimensions on the job and report any discrepancy to the Designer before proceeding with the work. All drawings and specifications are instruments of service and the property of the Designer which must be returned at the completion of the work. Drawings are not to be scaled.

VA3 DESIGN
255 Consumers Rd Suite 120
Toronto ON M2J 1R4
t 416.630.2255 f 416.630.4782
va3design.com

BAYVIEW WELLINGTON
CONST NOTE
-

project name: GREEN VALLEY EAST
municipality: BRADFORD
project no.: 16023
date: MAY 2016
CONSTRUCTION NOTES
drawing no.: CN4
drawn by: RC
checked by: -
scale: 3/16" = 1'-0"
file name: 16023-CN-A1
RICHARD - H:\ARCHIVE\WORKING\2016\16023.BW\Units\CN NOTES\16023-CN-A1.dwg - Thu - Jan 11 2018 - 10:10 AM

All drawings specifications, related documents and design are the copyright property of VA3 DESIGN. Reproduction of this property in whole or in part is strictly prohibited without VA3 DESIGN's written permission.

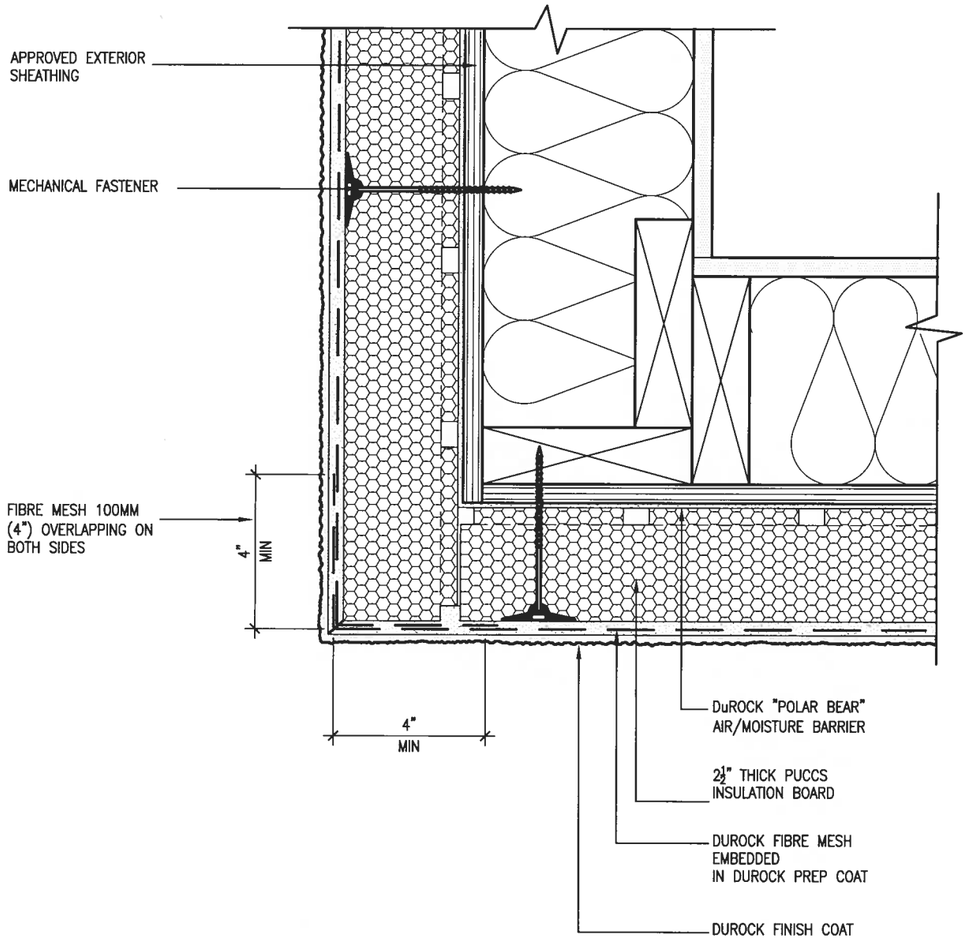

5 / CN5 CORNER DETAIL

SCALE: 3"=1'-0"

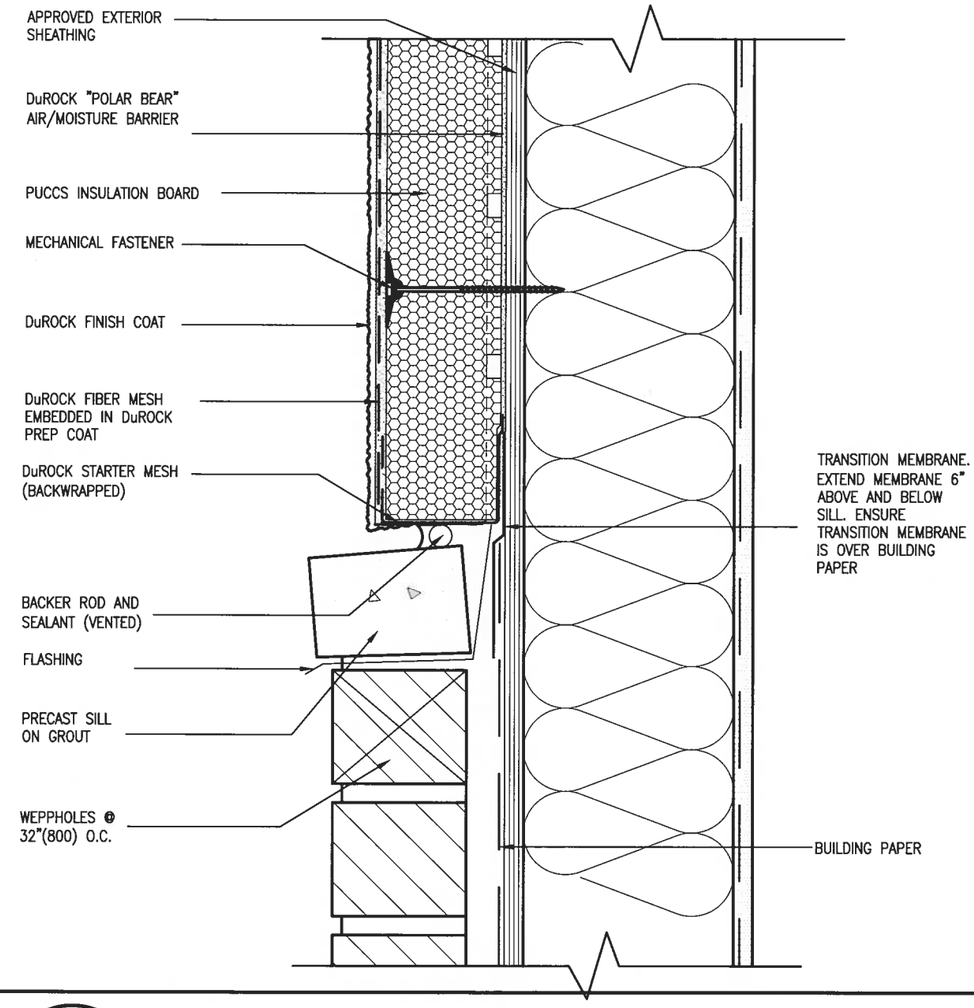

6 / CN5 STUCCO / MASONRY PLINTH CONNECTION

SCALE: 3"=1'-0"

ALL STUCCO WALLS TO HAVE A MINIMUM 10mm AIR SPACE BEHIND THE CLADDING WITH POSITIVE DRAINAGE TO THE EXTERIOR. THE EXTERIOR SHEATHING MUST NOT BE GYPSUM BASED. ALL STUCCO TO BE INSTALLED AS PER MANUFACTURERS SPECIFICATIONS.
DETAILS ARE BASED ON DuROCK PUCCS SYSTEM

CONST NOTE

project no. 16023

BAYVIEW WELLINGTON

municipality BRADFORD

project name GREEN VALLEY EAST

CONSTRUCTION NOTES

drawing no. CN5

date MAY 2016 | drawn by RC | checked by - | scale 3/16" = 1'-0" | file name 16023-CN-A1

RICHARD - H:\ARCHIVE\WORKING\2016\16023.BW\Units\CN NOTES\16023-CN-A1.dwg - Thu - Jan 11 2018 - 10:10 AM

VA3 DESIGN
255 Consumers Rd Suite 120
Toronto ON M2J 1R4
t 416.630.2255 f 416.630.4782
va3design.com

The undersigned has reviewed and takes responsibility for this design and has the qualifications and meets the requirements set out in the Ontario Building Code to be a Designer.

qualification information

name Wellington Jno-Baptiste | registration information 25591 BCIN

name VA3 Design Inc. | registration information 42658

signature

Contractor must verify all dimensions on the job and report any discrepancy to the Designer before proceeding with the work. All drawings and specifications are instruments of service and the property of the Designer which must be returned at the completion of the work. Drawings are not to be scaled.

no.	description	date	by
9	-	-	-
8	-	-	-
7	-	-	-
6	-	-	-
5	-	-	-
4	-	-	-
3	-	-	-
2	UPDATE TO 2018	JAN 11-18	RC
1	ISSUE FOR CLIENT REVIEW	AUG 04-17	RC

All drawings specifications, related documents and design are the copyright property of VA3 DESIGN. Reproduction of this property in whole or in part is strictly prohibited without VA3 DESIGN's written permission.

SB12–COMPLIANCE PACKAGE 'A1'

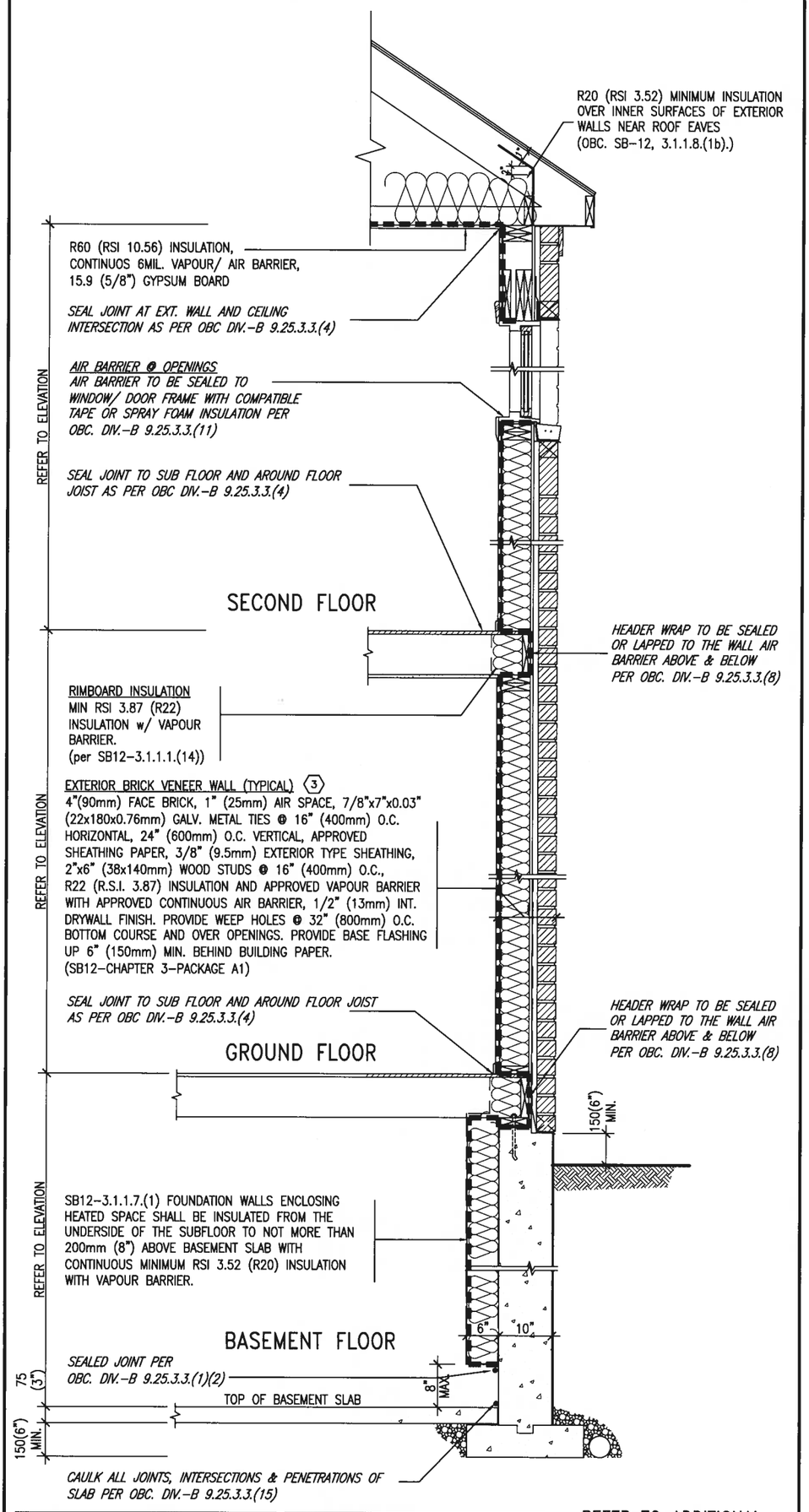

INSULATION REQUIREMENTS
REFER TO OBC SB–12, CHAPTER 3.
ZONE 1– COMPLIANCE PACKAGE A1.

AIR BARRIER SYSTEMS
AIR BARRIER TO BE INSTALLED IN CONFORMANCE WITH OBC. DIV. B–9.25.3

REFER TO ADDITIONAL DETAILS FOR STRUCTURAL COMPONENTS

EW TYPICAL EXT. WALL AIR BARRIER CONTINUITY
SECTION w/ BRICK VENEER (PACKAGE A1)
10" FOUNDATION WALL

SCALE: N.T.S.

THE MINIMAL THERMAL PERFORMANCE OF BUILDING ENVELOPE AND EQUIPMENT SHALL CONFORM TO THE FOLLOWING SB–12 COMPLIANCE PACKAGE AS PER OBC SUPPLEMENTARY STANDARD SB–12, SECTION 3.1.1.1.

USE SB–12 COMPLIANCE PACKAGE (A1):

COMPONENT	A1	Notes:
Ceiling with Attic Space Minimum RSI (R) value	10.56 (R60)	R20 at inner face of exterior walls
Ceiling without Attic Space Minimum RSI (R) value	5.46 (R31)	BATT or SPRAY
Exposed FLoor Minimum RSI (R) value	5.46 (R31)	BATT or SPRAY
Walls Above Grade Minimum RSI (R) value	3.87 (R22)	6" R22 BATT
Basement Walls Minimum RSI (R) value	3.52ci (R20ci)	OPTION TO USE R12+R10ci.
Edge of Below Grade Slab ≤600mm below grade Minimum RSI (R) value	1.76 (R10)	RIGID INSUL
Windows & Sliding glass Doors Maximum U–value	1.6	
Skylights Maximum U–value	2.8U	
Space Heating Equipment Minimum AFUE	96% Min.	NATURAL GAS
Hot Water Heater Minimum EF	0.8	NATURAL GAS
HRV Minimum Efficiency	75%	–
Drain Water Heat Recovery Unit (DWHR)	Minimum 1 OR Maximum 2 Required. Dependent on number of showers installed. Refer to SB12–3.1.1.12 for information	

ci– Denotes Continuous Insulation without framing interruption.

LICENSED PROFESSIONAL ENGINEER
S. J. BOYD
PROVINCE OF ONTARIO
JAN 11,2018

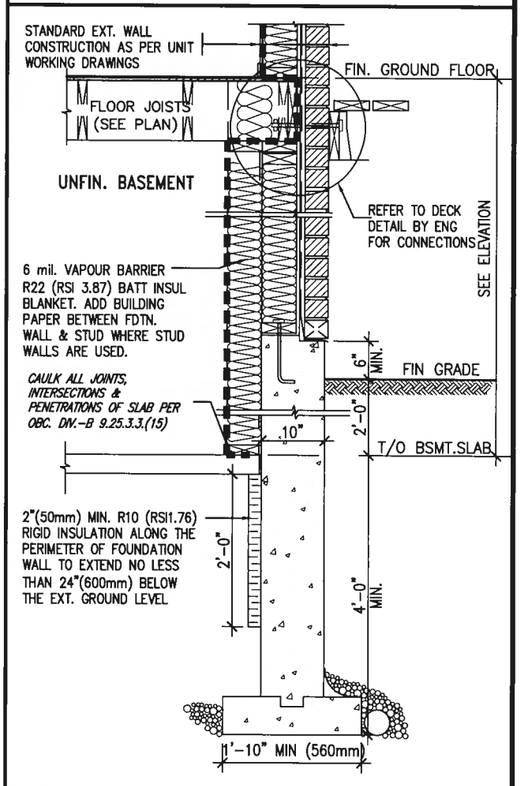

✳ REVISED–FEB 2017

SECTION AT W.O.D/W.O.B.

no.	description	date	by
9	.	.	.
8	.	.	.
7	.	.	.
6	.	.	.
5	.	.	.
4	.	.	.
3	.	.	.
2	UPDATE TO 2018	JAN 11–18	RC
1	ISSUE FOR CLIENT REVIEW	AUG 04–17	RC

The undersigned has reviewed and takes responsibility for this design and has the qualifications and meets the requirements set out in the Ontario Building Code to be a Designer.
qualification information
name: Wellington Jno–Baptiste — signature — registration information: 25591 BCIN
VA3 Design Inc. — 42658

Contractor must verify all dimensions on the job and report any discrepancy to the Designer before proceeding with the work. All drawings and specifications are instruments of service and the property of the Designer which must be returned at the completion of the work. Drawings are not to be scaled.

VA3 DESIGN
255 Consumers Rd Suite 120
Toronto ON M2J 1R4
t 416.630.2255 f 416.630.4782
va3design.com

BAYVIEW WELLINGTON

CONST NOTE –

project name: GREEN VALLEY EAST — municipality: BRADFORD — project no. 16023

date: MAY 2016 — CONSTRUCTION NOTES — drawing no. CN6

drawn by: RC — checked by: – — scale: 3/16" = 1'–0" — file name: 16023–CN–A1

RICHARD – H:\ARCHIVE\WORKING\2016\16023.BW\Units\CN NOTES\16023–CN–A1.dwg – Thu – Jan 11 2018 – 10:10 AM

All drawings specifications, related documents and design are the copyright property of VA3 DESIGN. Reproduction of this property in whole or in part is strictly prohibited without VA3 DESIGN's written permission.

SB12–COMPLIANCE PACKAGE 'A1'

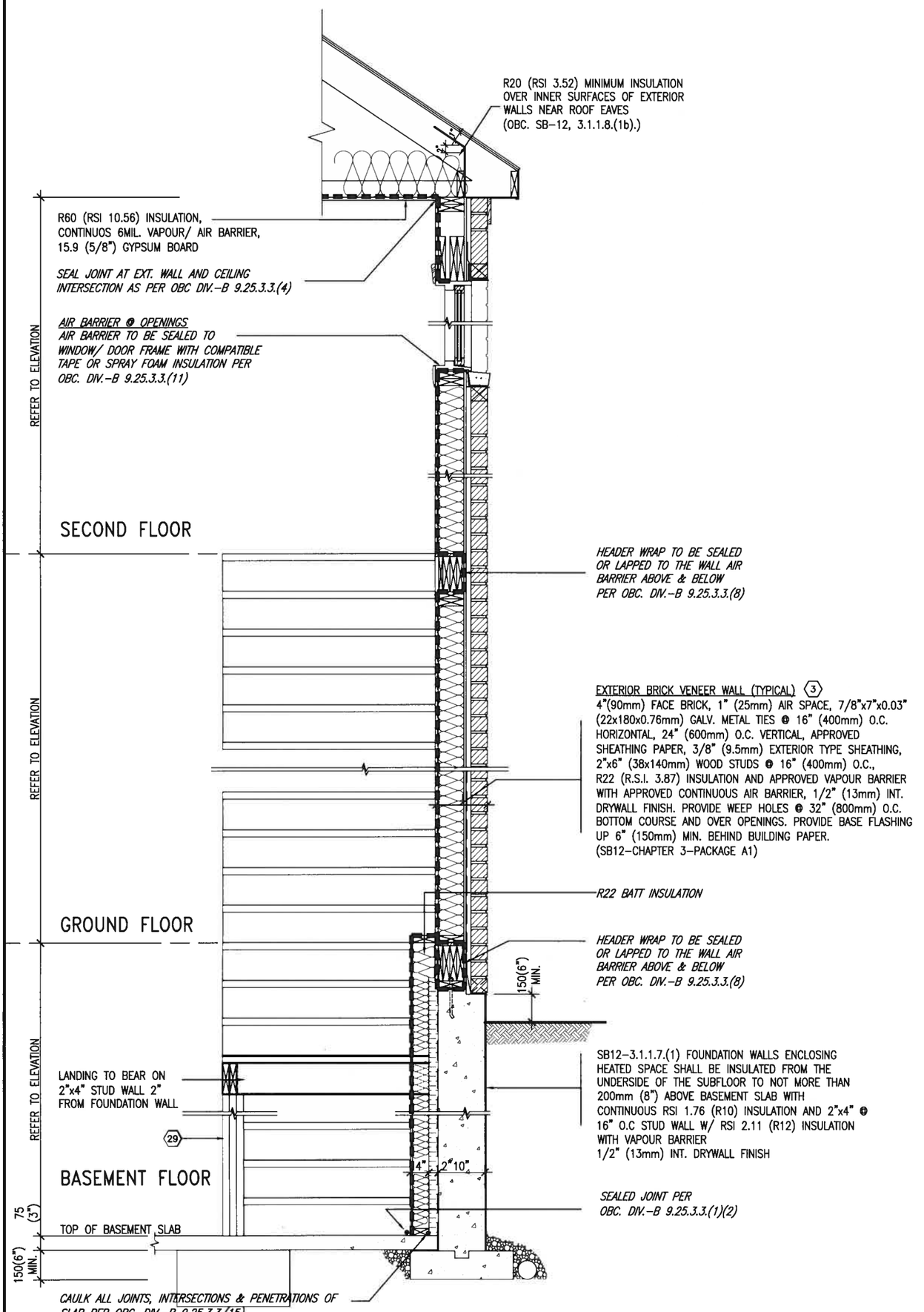

INSULATION REQUIREMENTS	AIR BARRIER SYSTEMS
REFER TO OBC SB–12, CHAPTER 3. ZONE 1– COMPLIANCE PACKAGE A1.	AIR BARRIER TO BE INSTALLED IN CONFORMANCE WITH OBC. DIV. B–9.25.3

REFER TO ADDITIONAL DETAILS FOR STRUCTURAL COMPONENTS

LICENSED PROFESSIONAL ENGINEER S.J. BOYD PROVINCE OF ONTARIO
JAN 11, 2018

EW / STR

TYPICAL EXT. WALL AIR BARRIER CONTINUITY SECTION w/ BRICK VENEER AT STAIR AND SUNKEN COND (PACKAGE A1) 10" FOUNDATION WALL

SCALE: N.T.S.

no.	description	date	by
9	.	.	.
8	.	.	.
7	.	.	.
6	.	.	.
5	.	.	.
4	.	.	.
3	.	.	.
2	UPDATE TO 2018	JAN 11–18	RC
1	ISSUE FOR CLIENT REVIEW	AUG 04–17	RC

The undersigned has reviewed and takes responsibility for this design and has the qualifications and meets the requirements set out in the Ontario Building Code to be a Designer.

qualification information
name: Wellington Jno–Baptiste — signature — BCIN 25591
registration information: VA3 Design Inc. — 42658

Contractor must verify all dimensions on the job and report any discrepancy to the Designer before proceeding with the work. All drawings and specifications are instruments of service and the property of the Designer which must be returned at the completion of the work. Drawings are not to be scaled.

VA3 DESIGN
255 Consumers Rd Suite 120
Toronto ON M2J 1R4
t 416.630.2255 f 416.630.4782
va3design.com

BAYVIEW WELLINGTON

project name: GREEN VALLEY EAST — municipality: BRADFORD

CONST NOTE –

project no. 16023

date: MAY 2016 — CONSTRUCTION NOTES

drawn by: RC — checked by: – — scale: 3/16" = 1'–0" — file name: 16023–CN–A1

drawing no. CN7

RICHARD – H:\ARCHIVE\WORKING\2016\16023.BW\Units\CN NOTES\16023–CN–A1.dwg – Thu – Jan 11 2018 – 10:10 AM

All drawings specifications, related documents and design are the copyright property of VA3 DESIGN. Reproduction of this property in whole or in part is strictly prohibited without VA3 DESIGN's written permission.

COMPLIANCE TO OBC SB-12 2.1.1.1(11)

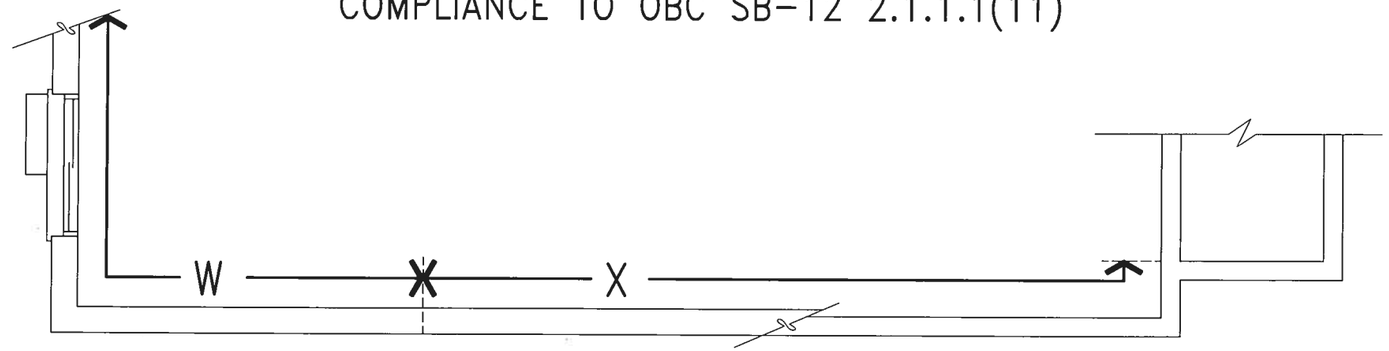

WOB PLAN

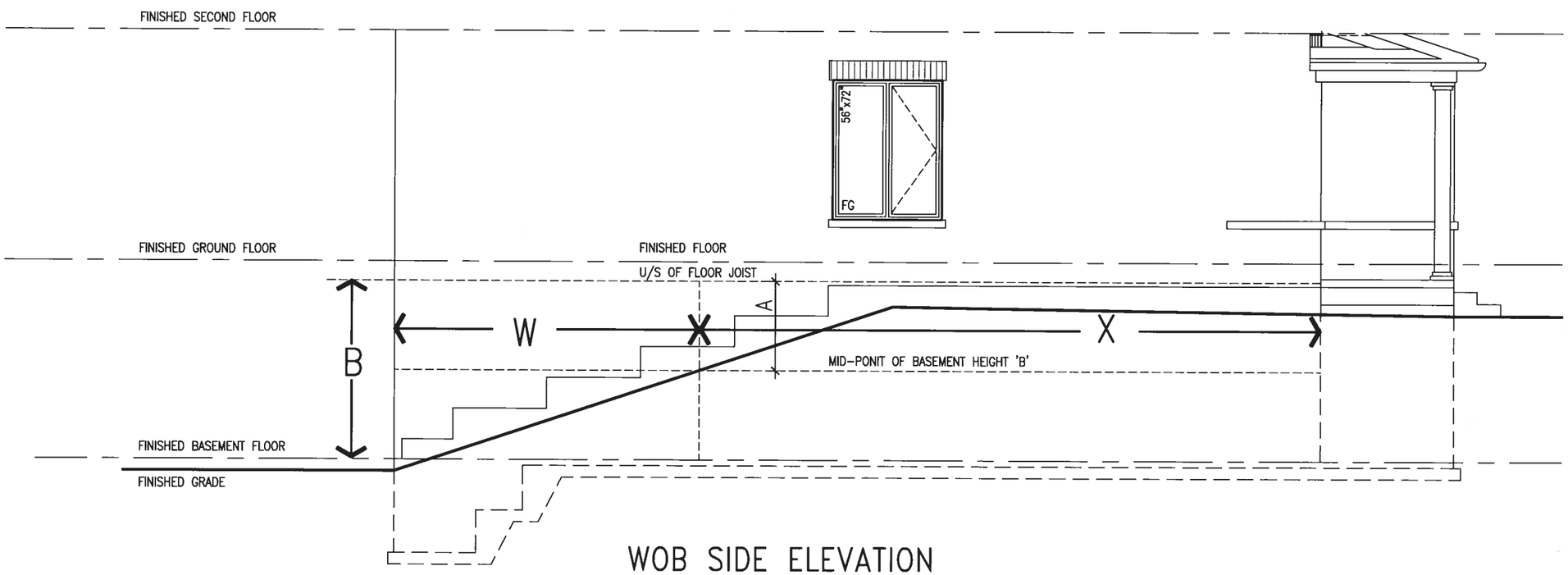

WOB SIDE ELEVATION

WHEN EXPOSED WALL "A" IS GREATER THAN 50% OF BASEMENT WALL HEIGHT "B"
INSULATION VALUE FOR WALL IN SECTION "W" IS NOT LESS THAN IS REQUIRED FOR ABOVE GRADE WALL AS REQUIRED BY TABLE 2.1.1.2A

WHEN EXPOSED WALL "A" IS LESS THAN 50% OF BASEMENT WALL HEIGHT "B"
INSULATION VALUE FOR WALL IN SECTION "X" IS NOT LESS THAN BASEMENT WALL AS REQUIRED BY TABLE 2.1.1.2A

LICENSED PROFESSIONAL ENGINEER S.J. BOYD PROVINCE OF ONTARIO
JAN 11, 2018

CONST NOTE
-

project no. 16023

BAYVIEW WELLINGTON

project name GREEN VALLEY EAST
municipality BRADFORD

CONSTRUCTION NOTES
drawing no. CN8

date MAY 2016
drawn by RC
checked by -
scale 3/16" = 1'-0"
file name 16023-CN-A1

RICHARD - H:\ARCHIVE\WORKING\2016\16023.BW\Units\CN NOTES\16023-CN-A1.dwg - Thu - Jan 11 2018 - 10:09 AM

VA3 DESIGN
255 Consumers Rd Suite 120
Toronto ON M2J 1R4
t 416.630.2255 f 416.630.4782
va3design.com

The undersigned has reviewed and takes responsibility for this design and has the qualifications and meets the requirements set out in the Ontario Building Code to be a Designer.

qualification information
Wellington Jno-Baptiste 25591 BCIN
name registration information
VA3 Design Inc. 42658

signature

Contractor must verify all dimensions on the job and report any discrepancy to the Designer before proceeding with the work. All drawings and specifications are instruments of service and the property of the Designer which must be returned at the completion of the work. Drawings are not to be scaled.

no.	description	date	by
9	-	-	-
8	-	-	-
7	-	-	-
6	-	-	-
5	-	-	-
4	-	-	-
3	-	-	-
2	UPDATE TO 2018	JAN 11-18	RC
1	ISSUE FOR CLIENT REVIEW	AUG 04-17	RC

All drawings specifications, related documents and design are the copyright property of VA3 DESIGN. Reproduction of this property in whole or in part is strictly prohibited without VA3 DESIGN's written permission.

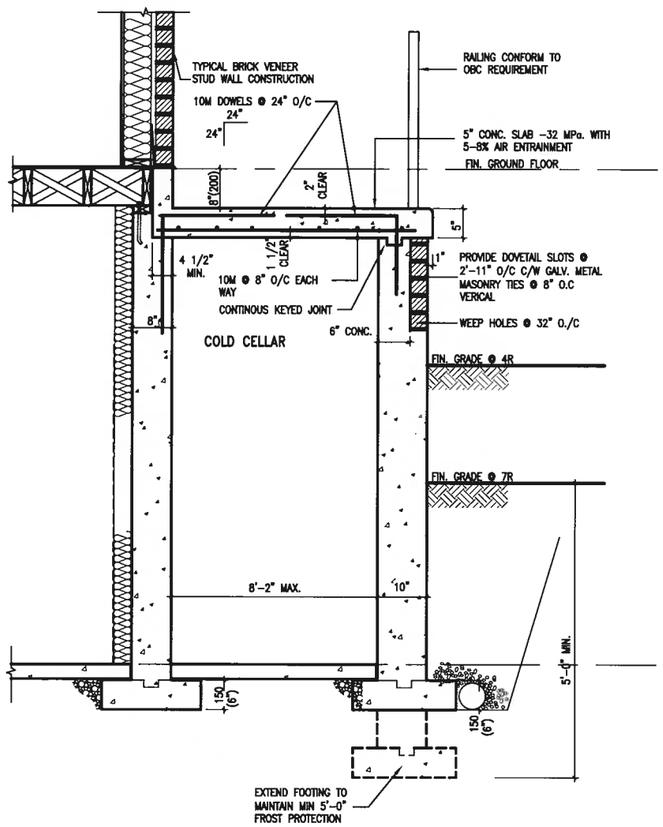

X1 SECTION AT PORCH FOR 4-7R CONDITION

SCALE: N.T.S.

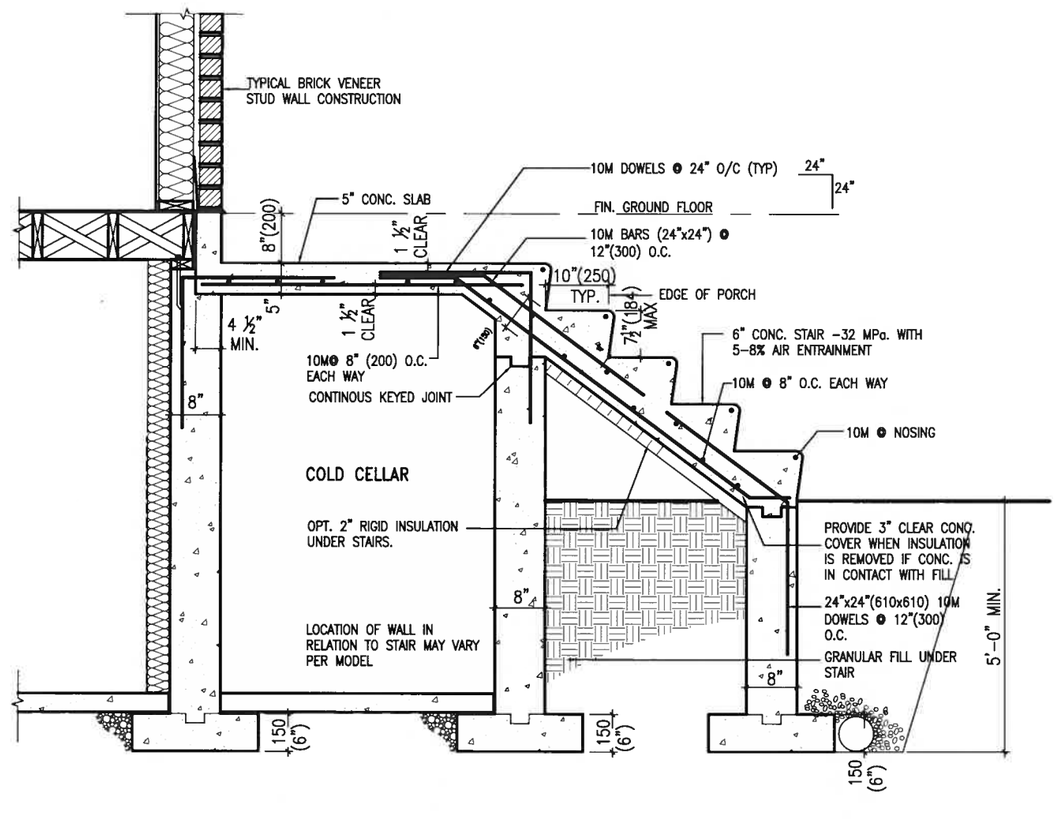

X2 EXTERIOR CONC. STAIR DETAIL (6 RISERS/ 7 RISERS SIMILAR)

SCALE: N.T.S.

LICENSED PROFESSIONAL ENGINEER
S.J. BOYD
PROVINCE OF ONTARIO

JAN 11, 2018

CONST NOTE

BAYVIEW WELLINGTON

project name: GREEN VALLEY EAST

municipality: BRADFORD

project no. 16023

CONSTRUCTION NOTES

drawing no. CN9

date: MAY 2016 | drawn by: RC | checked by: _ | scale: 3/16" = 1'-0" | file name: 16023-CN-A1

RICHARD - H:\ARCHIVE\WORKING\2016\16023.BW\Units\CN NOTES\16023-CN-A1.dwg - Thu - Jan 11 2018 - 10:09 AM

VA3 DESIGN
255 Consumers Rd Suite 120
Toronto ON M2J 1R4
t 416.630.2255 f 416.630.4782
va3design.com

The undersigned has reviewed and takes responsibility for this design and has the qualifications and meets the requirements set out in the Ontario Building Code to be a Designer.

qualification information
Wellington Jno-Baptiste 25591 BCIN
name registration information
VA3 Design Inc. 42658
signature

Contractor must verify all dimensions on the job and report any discrepancy to the Designer before proceeding with the work. All drawings and specifications are instruments of service and the property of the Designer which must be returned at the completion of the work. Drawings are not to be scaled.

no.	description	date	by
9	-	-	-
8	-	-	-
7	-	-	-
6	-	-	-
5	-	-	-
4	-	-	-
3	-	-	-
2	UPDATE TO 2018	JAN 11-18	RC
1	ISSUE FOR CLIENT REVIEW	AUG 04-17	RC

All drawings specifications, related documents and design are the copyright property of VA3 DESIGN. Reproduction of this property in whole or in part is strictly prohibited without VA3 DESIGN's written permission.

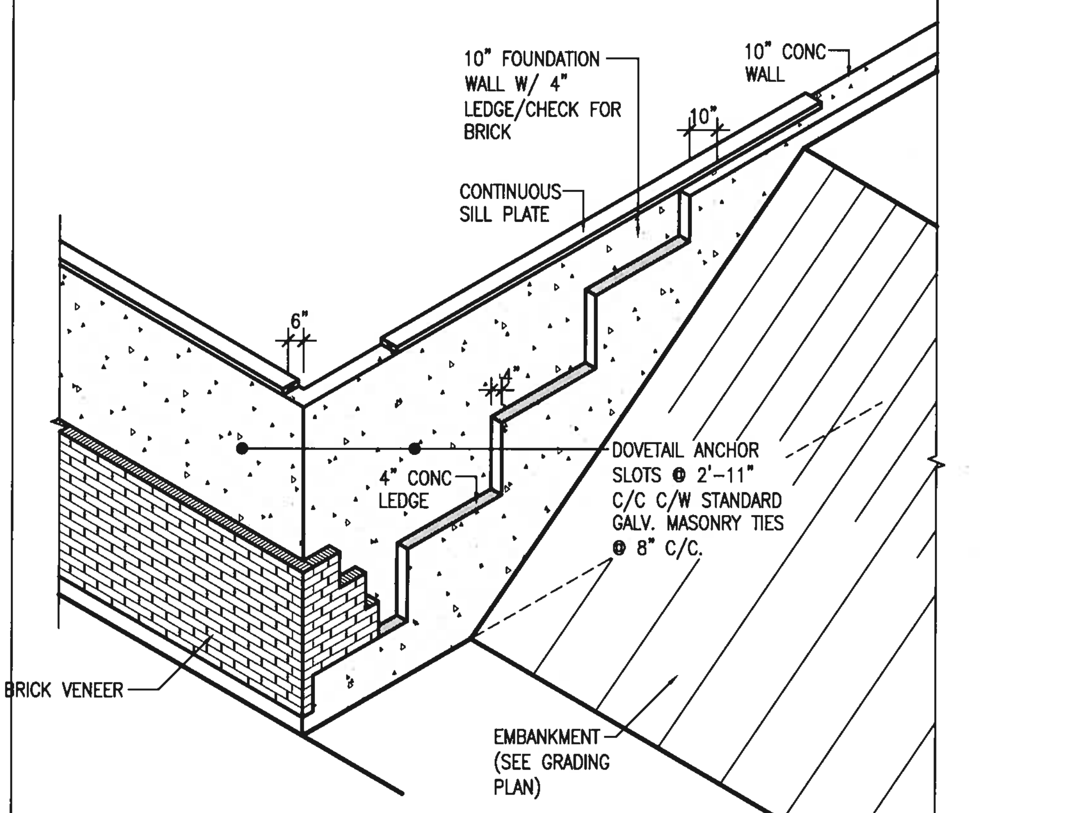

WALK-OUT DECK WALL INTERSECTION-ELEVATION

NOT TO SCALE

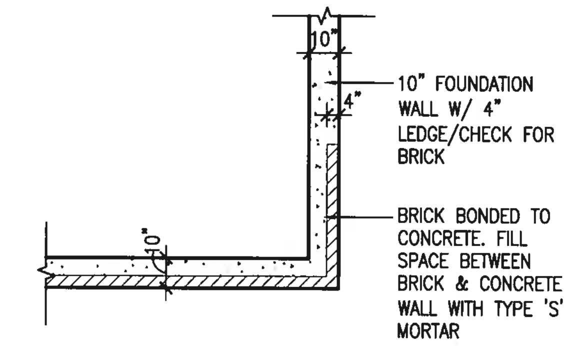

WALK-OUT DECK WALL INTERSECTION-PLAN

NOT TO SCALE

(10" FOUNDATION WALL)

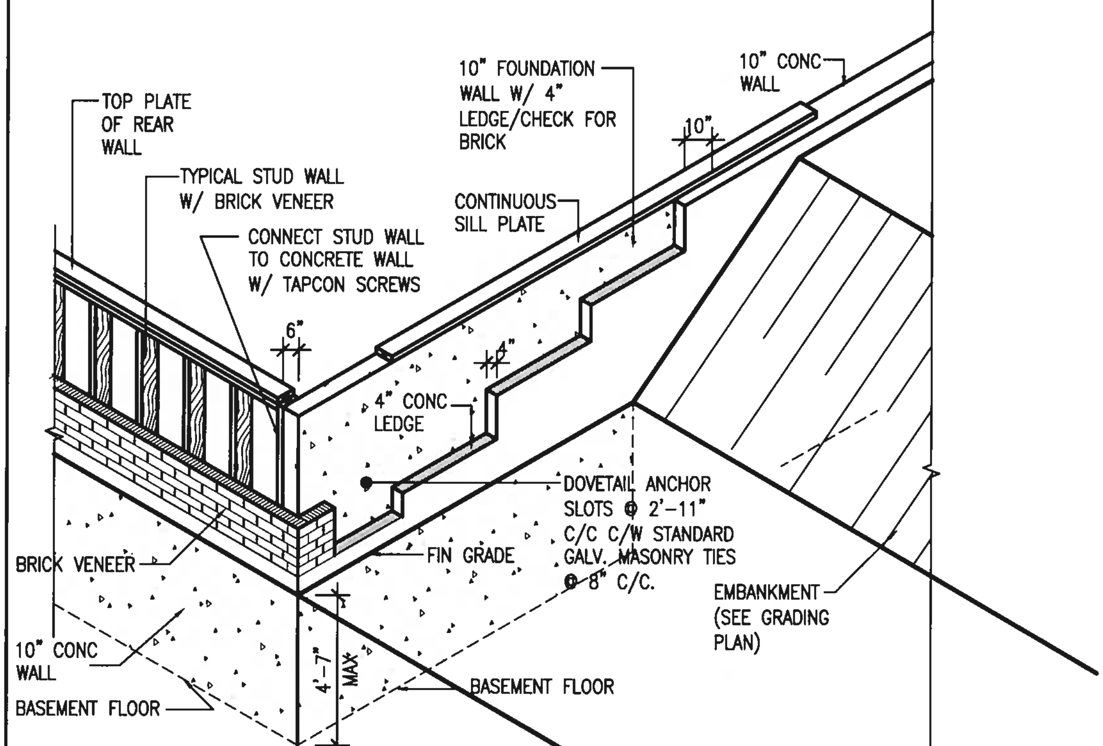

WALK-OUT DECK WALL INTERSECTION-ELEVATION MAX 4'-7" BACKFILL

NOT TO SCALE

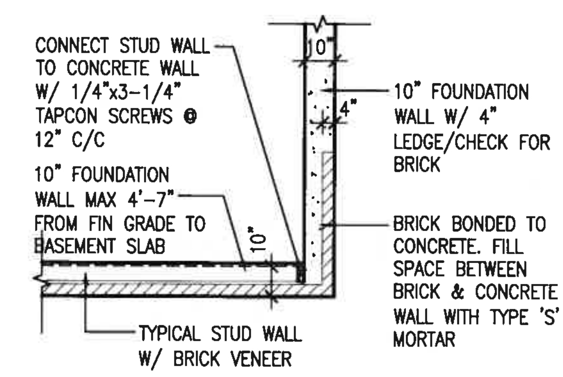

WALK-OUT BASEMENT WALL INTERSECTION-PLAN

NOT TO SCALE

(10" FOUNDATION WALL)

LICENSED PROFESSIONAL ENGINEER
S. J. BOYD
PROVINCE OF ONTARIO
JAN 11,2018

no.	description	date	by
9	.	.	.
8	.	.	.
7	.	.	.
6	.	.	.
5	.	.	.
4	.	.	.
3	.	.	.
2	UPDATE TO 2018	JAN 11-18	RC
1	ISSUE FOR CLIENT REVIEW	AUG 04-17	RC

The undersigned has reviewed and takes responsibility for this design and has the qualifications and meets the requirements set out in the Ontario Building Code to be a Designer.

qualification information

Wellington Jno-Baptiste (name) — signature — 25591 (BCIN)

registration information

VA3 Design Inc. — 42658

Contractor must verify all dimensions on the job and report any discrepancy to the Designer before proceeding with the work. All drawings and specifications are instruments of service and the property of the Designer which must be returned at the completion of the work. Drawings are not to be scaled.

VA3 DESIGN
255 Consumers Rd Suite 120
Toronto ON M2J 1R4
t 416.630.2255 f 416.630.4782
va3design.com

BAYVIEW WELLINGTON

CONST NOTE

-

project name	municipality	project no.
GREEN VALLEY EAST	BRADFORD	16023

date			drawing no.
MAY 2016	CONSTRUCTION NOTES		CN10
drawn by: RC	checked by: -	scale: 3/16" = 1'-0"	file name: 16023-CN-A1

RICHARD - H:\ARCHIVE\WORKING\2016\16023.BW\Units\CN NOTES\16023-CN-A1.dwg - Thu - Jan 11 2018 - 10:09 AM

All drawings specifications, related documents and design are the copyright property of VA3 DESIGN. Reproduction of this property in whole or in part is strictly prohibited without VA3 DESIGN's written permission.

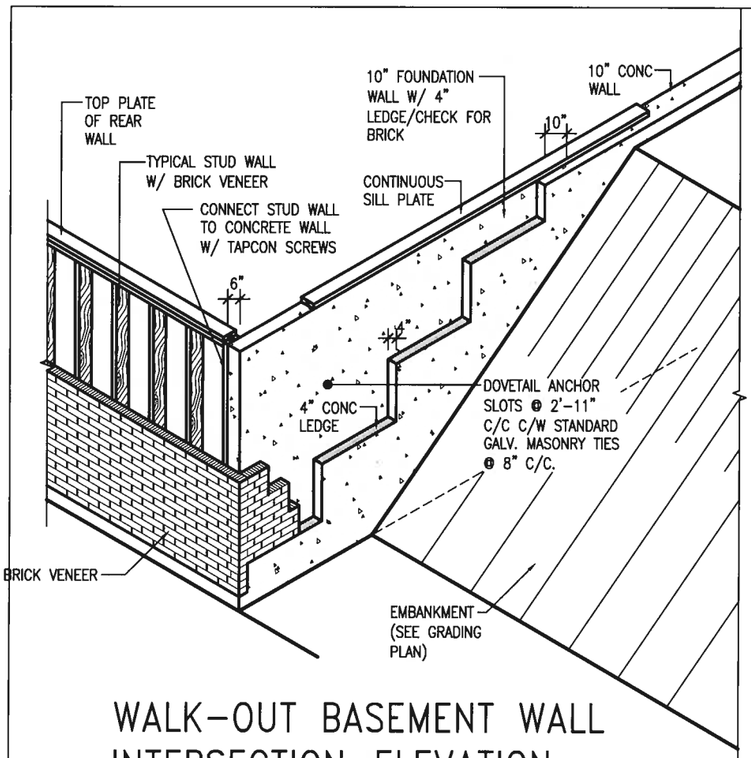

WALK-OUT BASEMENT WALL INTERSECTION-ELEVATION

NOT TO SCALE

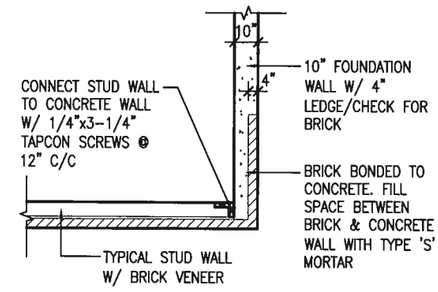

WALK-OUT BASEMENT WALL INTERSECTION-PLAN

NOT TO SCALE

(10" FOUNDATION WALL)

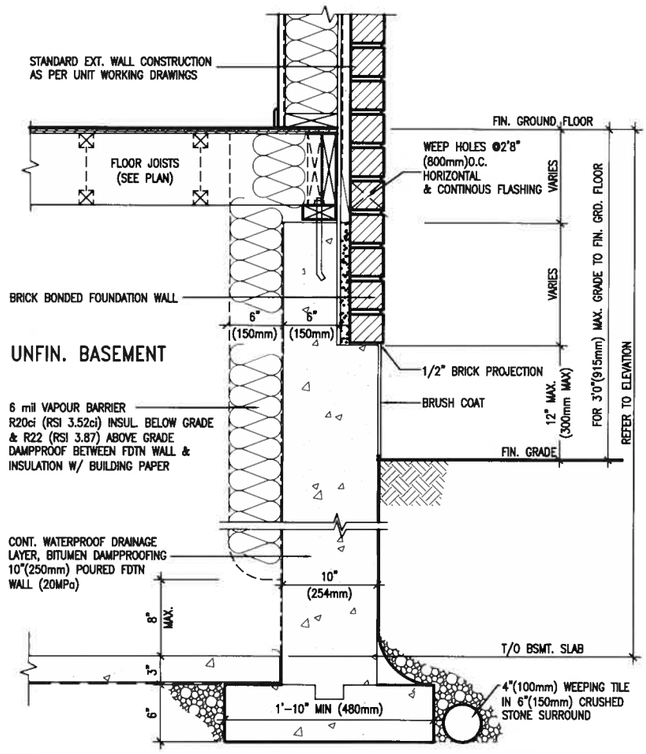

EW3.06x
PKG A1

WALL SECTION FOR GRADE TO FIN. FLOOR MORE THAN 4'7" (1400mm) HEIGHT DIFFERENCE

SCALE: N.T.S.

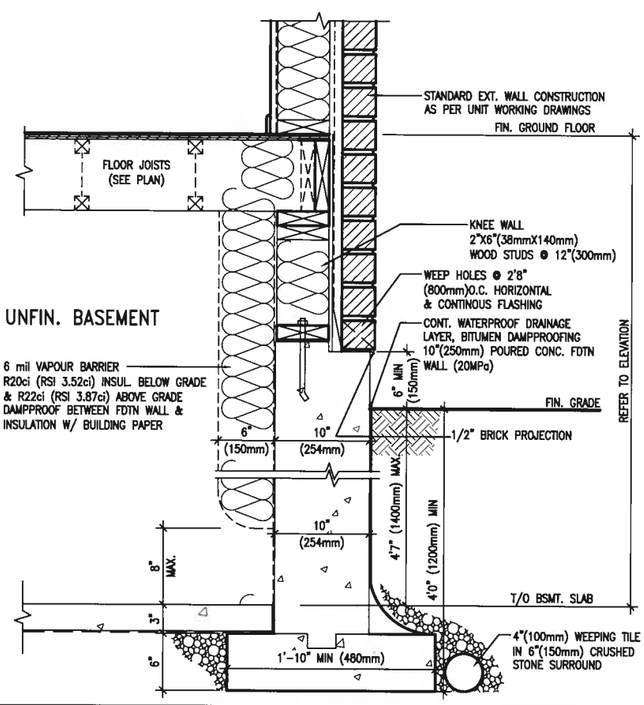

EW3.07x
PKG A1

WALL SECTION FOR GRADE TO BASEMENT SLAB 4'7"(1400mm) MAX. HEIGHT DIFFERENCE

SCALE: N.T.S.

LICENSED PROFESSIONAL ENGINEER
S. J. BOYD
PROVINCE OF ONTARIO

JAN 11,2018

no.	description	date	by
9	.	.	.
8	.	.	.
7	.	.	.
6	.	.	.
5	.	.	.
4	.	.	.
3	.	.	.
2	UPDATE TO 2018	JAN 11-18	RC
1	ISSUE FOR CLIENT REVIEW	AUG 04-17	RC

The undersigned has reviewed and takes responsibility for this design and has the qualifications and meets the requirements set out in the Ontario Building Code to be a Designer.

qualification information

name	signature	BCIN
Wellington Jno-Baptiste		25591
registration information		
VA3 Design Inc.		42658

Contractor must verify all dimensions on the job and report any discrepancy to the Designer before proceeding with the work. All drawings and specifications are instruments of service and the property of the Designer which must be returned at the completion of the work. Drawings are not to be scaled.

VA3 DESIGN
255 Consumers Rd Suite 120
Toronto ON M2J 1R4
t 416.630.2255 f 416.630.4782
va3design.com

BAYVIEW WELLINGTON

CONST NOTE
-

project name: GREEN VALLEY EAST
municipality: BRADFORD
project no.: 16023

date: MAY 2016
CONSTRUCTION NOTES
drawn by: RC
checked by: -
scale: 3/16" = 1'-0"
file name: 16023-CN-A1
drawing no.: CN11

RICHARD - H:\ARCHIVE\WORKING\2016\16023.BW\Units\CN NOTES\16023-CN-A1.dwg - Thu - Jan 11 2018 - 10:09 AM

All drawings specifications, related documents and design are the copyright property of VA3 DESIGN. Reproduction of this property in whole or in part is strictly prohibited without VA3 DESIGN's written permission.

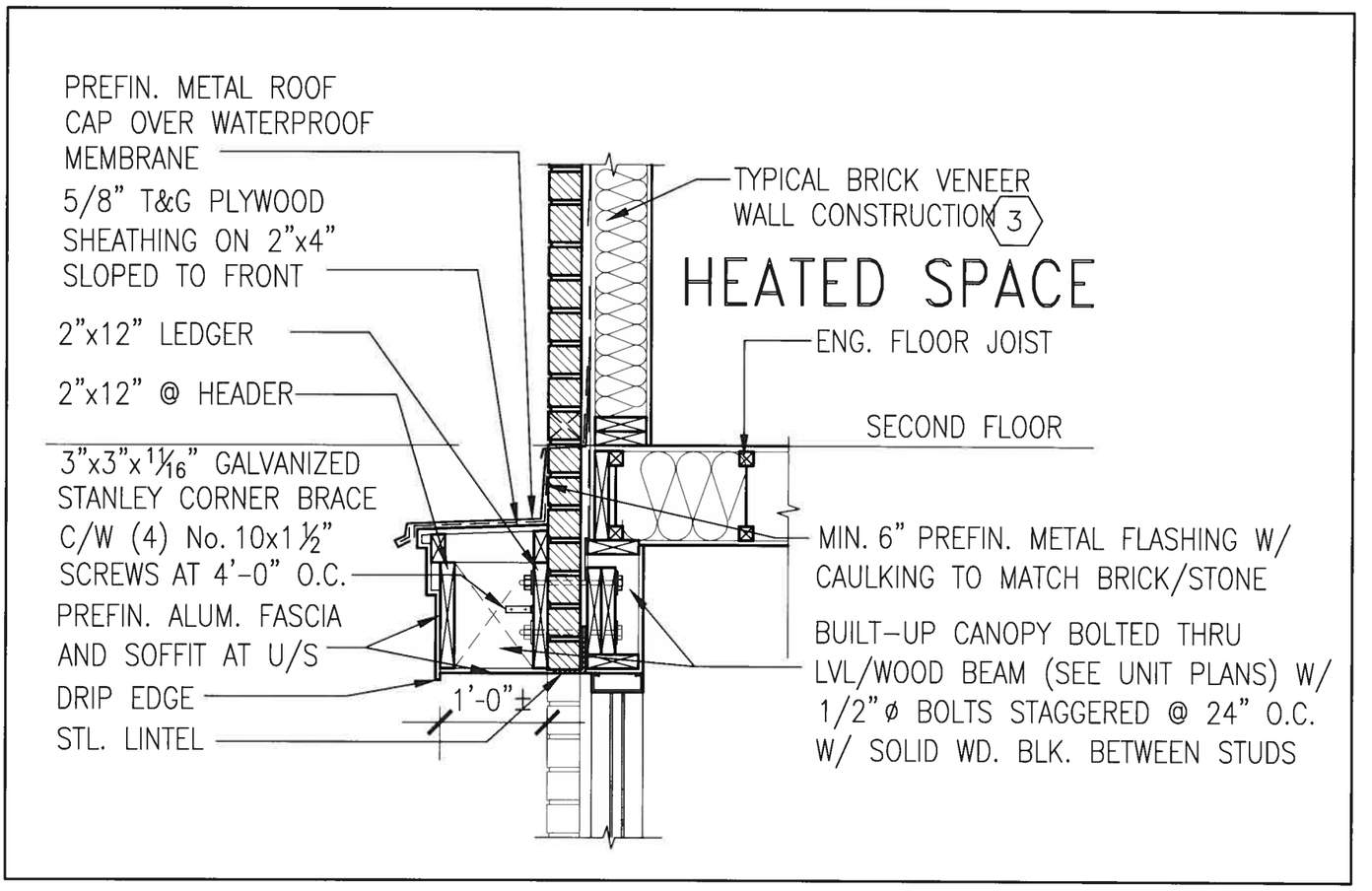

1 / CN12

SECTION THROUGH CANOPY

SCALE 1/2" = 1'-0"

LICENSED PROFESSIONAL ENGINEER
S. J. BOYD
PROVINCE OF ONTARIO

JAN 11,2018

no.	description	date	by
9	.	.	.
8	.	.	.
7	.	.	.
6	.	.	.
5	.	.	.
4	.	.	.
3	.	.	.
2	UPDATE TO 2018	JAN 11-18	RC
1	ISSUE FOR CLIENT REVIEW	AUG 04-17	RC

The undersigned has reviewed and takes responsibility for this design and has the qualifications and meets the requirements set out in the Ontario Building Code to be a Designer.

qualification information

name: Wellington Jno-Baptiste — signature — BCIN: 25591

registration information: VA3 Design Inc. — 42658

Contractor must verify all dimensions on the job and report any discrepancy to the Designer before proceeding with the work. All drawings and specifications are instruments of service and the property of the Designer which must be returned at the completion of the work. Drawings are not to be scaled.

VA3 DESIGN
255 Consumers Rd Suite 120
Toronto ON M2J 1R4
t 416.630.2255 f 416.630.4782
va3design.com

BAYVIEW WELLINGTON

project name: GREEN VALLEY EAST — municipality: BRADFORD

CONST NOTE -

project no. 16023

date: MAY 2016 — CONSTRUCTION NOTES

drawn by: RC — checked by: - — scale: 3/16" = 1'-0" — file name: 16023-CN-A1

drawing no. CN12

RICHARD - H:\ARCHIVE\WORKING\2016\16023.BW\Units\CN NOTES\16023-CN-A1.dwg - Thu - Jan 11 2018 - 10:11 AM

All drawings specifications, related documents and design are the copyright property of VA3 DESIGN. Reproduction of this property in whole or in part is strictly prohibited without VA3 DESIGN's written permission.

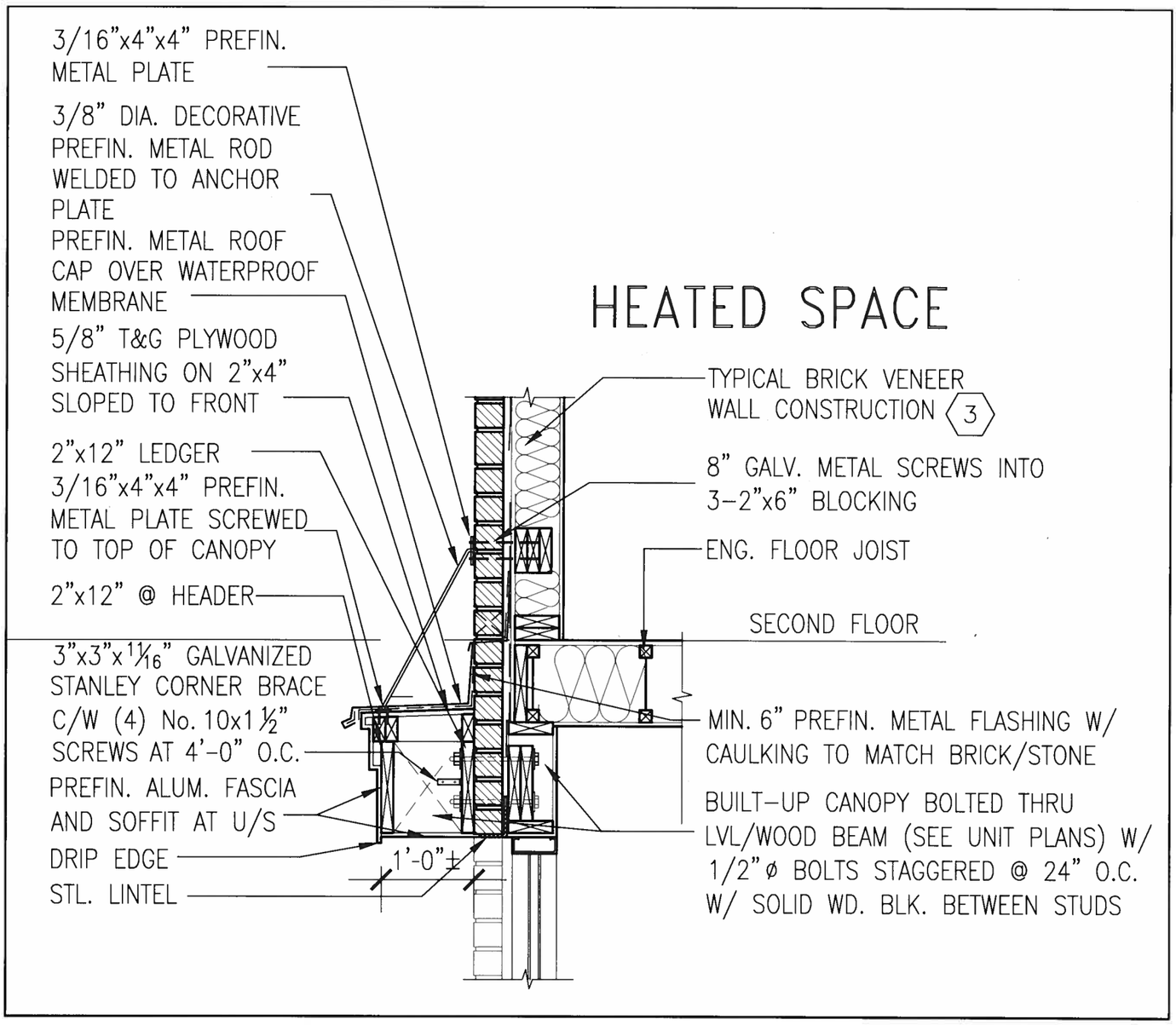

1 / CN13

SECTION THROUGH CANOPY W/ DECORATIVE ROD

SCALE 1/2" = 1'-0"

LICENSED PROFESSIONAL ENGINEER S. J. BOYD PROVINCE OF ONTARIO

JAN 11,2018

no.	description	date	by
9	.	.	.
8	.	.	.
7	.	.	.
6	.	.	.
5	.	.	.
4	.	.	.
3	.	.	.
2	UPDATE TO 2018	JAN 11-18	RC
1	ISSUE FOR CLIENT REVIEW	AUG 04-17	RC

The undersigned has reviewed and takes responsibility for this design and has the qualifications and meets the requirements set out in the Ontario Building Code to be a Designer.

qualification information

name: Wellington Jno-Baptiste — signature — BCIN: 25591

registration information: VA3 Design Inc. — 42658

Contractor must verify all dimensions on the job and report any discrepancy to the Designer before proceeding with the work. All drawings and specifications are instruments of service and the property of the Designer which must be returned at the completion of the work. Drawings are not to be scaled.

VA3 DESIGN
255 Consumers Rd Suite 120
Toronto ON M2J 1R4
t 416.630.2255 f 416.630.4782
va3design.com

BAYVIEW WELLINGTON

project name: GREEN VALLEY EAST — municipality: BRADFORD

CONST NOTE — project no. 16023

date: MAY 2016 — CONSTRUCTION NOTES

drawn by: RC — checked by: – — scale: 3/16" = 1'-0" — file name: 16023-CN-A1

drawing no. CN13

RICHARD – H:\ARCHIVE\WORKING\2016\16023.BW\Units\CN NOTES\16023-CN-A1.dwg – Thu – Jan 11 2018 – 10:11 AM

All drawings specifications, related documents and design are the copyright property of VA3 DESIGN. Reproduction of this property in whole or in part is strictly prohibited without VA3 DESIGN's written permission.

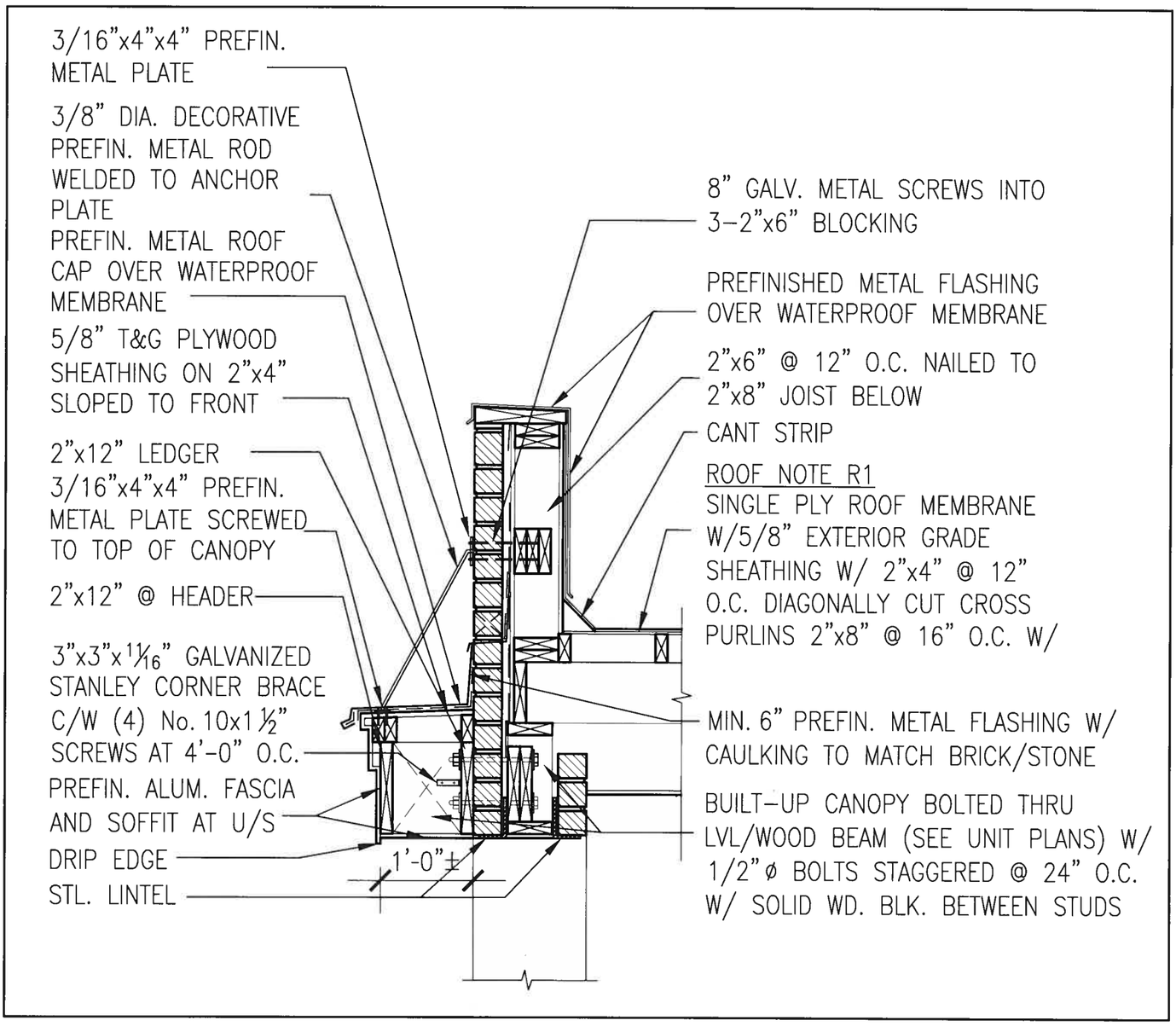

1 / CN14 SECTION THROUGH CANOPY W/ DECORATIVE ROD

SCALE 1/2" = 1'-0"

LICENSED PROFESSIONAL ENGINEER S. J. BOYD PROVINCE OF ONTARIO

JAN 11,2018

no.	description	date	by
9	.	.	.
8	.	.	.
7	.	.	.
6	.	.	.
5	.	.	.
4	.	.	.
3	.	.	.
2	UPDATE TO 2018	JAN 11-18	RC
1	ISSUE FOR CLIENT REVIEW	AUG 04-17	RC

The undersigned has reviewed and takes responsibility for this design and has the qualifications and meets the requirements set out in the Ontario Building Code to be a Designer.

qualification information

name: Wellington Jno-Baptiste — signature — BCIN 25591

registration information: VA3 Design Inc. — 42658

Contractor must verify all dimensions on the job and report any discrepancy to the Designer before proceeding with the work. All drawings and specifications are instruments of service and the property of the Designer which must be returned at the completion of the work. Drawings are not to be scaled.

VA3 DESIGN
255 Consumers Rd Suite 120
Toronto ON M2J 1R4
t 416.630.2255 f 416.630.4782
va3design.com

BAYVIEW WELLINGTON

project name: GREEN VALLEY EAST — municipality: BRADFORD

CONST NOTE -

project no. 16023

date: MAY 2016 — CONSTRUCTION NOTES

drawn by: RC — checked by: – — scale: 3/16" = 1'-0" — file name: 16023-CN-A1

drawing no. CN14

RICHARD - H:\ARCHIVE\WORKING\2016\16023.BW\Units\CN NOTES\16023-CN-A1.dwg - Thu - Jan 11 2018 - 10:19 AM

All drawings specifications, related documents and design are the copyright property of VA3 DESIGN. Reproduction of this property in whole or in part is strictly prohibited without VA3 DESIGN's written permission.