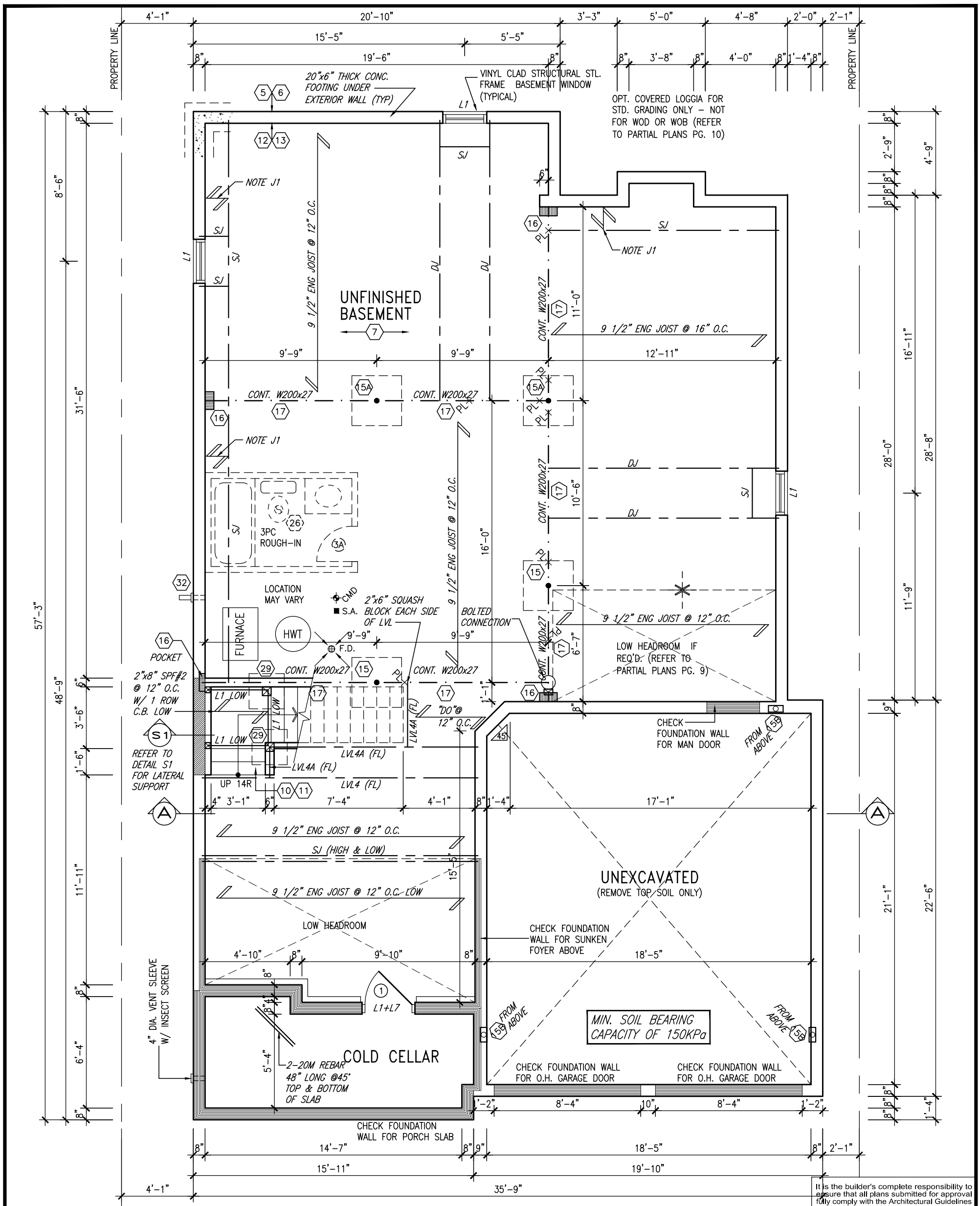


# BASEMENT PLAN 'A'

| AREA CALCULATIONS | ELEV. A | ELEV. B | ELEV. C |
|---|---|---|---|
| GROUND FLOOR AREA | 1378 SF | 1384 SF | 1378 SF |
| SECOND FLOOR AREA | 1696 SF | 1705 SF | 1710 SF |
| SUBTOTAL | 3074 SF | 3089 SF | 3088 SF |
| DEDUCT ALL OPEN AREAS | 14 SF | 14 SF | 14 SF |
| **TOTAL NET AREA** | **3060 SF** (284.28 m2) | **3075 SF** (285.68 m2) | **3074 SF** (285.58 m2) |
| FINISHED BSMT AREA | 0 SF | 0 SF | 0 SF |
| COVERAGE W/OUT PORCH | 1798 SF (167.04 m2) | 1808 SF (167.97 m2) | 1802 SF (167.41 m2) |
| **COVERAGE** W/ PORCH | **1899 SF** (176.42 m2) | **1876 SF** (174.28 m2) | **1871 SF** (173.82 m2) |

*NOTE: SPACE ALL FLOOR JOISTS @ 12" O.C. UNDER ALL CERAMIC TILE AREAS.*

*NOTE: ALL LVL'S SUPPORTING FLOOR LOADS ARE TO BE SPECIFIED BY FLOOR TRUSS MANUFACTURER.*

*NOTE: FLOOR FRAMING INFO REFER TO SHOP DRAWINGS FOR ALL TRUSS-JOIST INFORMATION AND DETAILS. UNLESS OTHERWISE NOTED.*

*NOTE J1: PROVIDE SOLID BLOCKING @ 24" O.C. WHERE FLOOR JOISTS ARE PARALLEL TO FOUNDATION WALL (TYP.)*

It is the builder's complete responsibility to ensure that all plans submitted for approval fully comply with the Architectural Guidelines and all applicable regulations and requirements including zoning provisions and any provisions in the subdivision agreement. The Control Architect is not responsible in any way for examining or approving site (lotting) plans or working drawings with respect to any zoning or building code or permit matter or that any house can be properly built or located on its lot.

This is to certify that these plans comply with the applicable Architectural Design Guidelines approved by the Town of BRADFORD / WEST GWILLIMBURY.

| no. | description | date | by |
|---|---|---|---|
| 9 | . | . | . |
| 8 | . | . | . |
| 7 | . | . | . |
| 6 | . | . | . |
| 5 | . | . | . |
| 4 | . | . | . |
| 3 | . | . | . |
| 2 | REVISED AS PER ENG'S COMMENTS | APR 30-15 | RC |
| 1 | ISSUED FOR CLIENT REVIEW | 14-08-30 | LM |

The undersigned has reviewed and takes responsibility for this design and has the qualifications and meets the requirements set out in the Ontario Building Code to be a Designer.

qualification information
name: Wellington Jno-Baptiste — signature — BCIN 25591
registration information: VA3 Design Inc. — 42658

Contractor must verify all dimensions on the job and report any discrepancy to the Designer before proceeding with the work. All drawings and specifications are instruments of service and the property of the Designer which must be returned at the completion of the work. Drawings are not to be scaled.

VA3 DESIGN
300A Wilson Avenue
Toronto ON M3H 1S8
t 416.630.2255 f 416.630.4782
va3design.com

**BAYVIEW WELLINGTON**

**S42-3**
RIDEAU 3

project name: GREEN VALLEY ESTATES
municipality: BRADFORD, ON.
project no.: 13045

date: 2014-04
BASEMENT PLAN ELEV. 'A'
drawn by: LM
checked by: –
scale: 3/16" = 1'-0"
file name: 13045-S42-3
drawing no.: 1

RICHARD – H:\ARCHIVE\WORKING\2013\13045.BW\units\42"\13045-S42-3.dwg – Wed – Jun 3 2015 – 10:37 AM

All drawings specifications, related documents and design are the copyright property of VA3 DESIGN. Reproduction of this property in whole or in part is strictly prohibited without VA3 DESIGN's written permission.

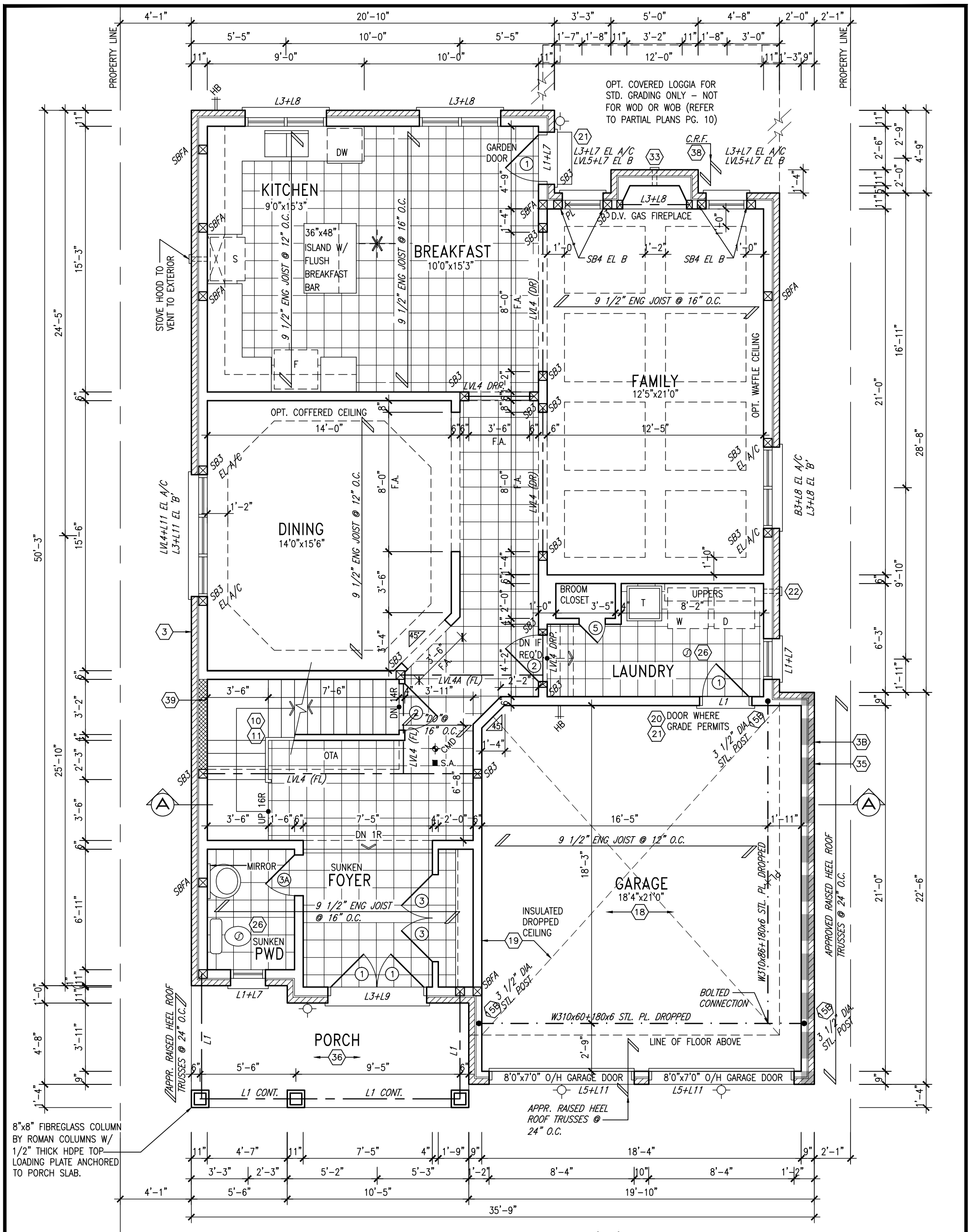


# GROUND FLOOR PLAN 'A'

NOTE: SPACE ALL FLOOR JOISTS @ 12" O.C. UNDER ALL CERAMIC TILE AREAS.

NOTE: ALL LVL'S SUPPORTING FLOOR LOADS ARE TO BE SPECIFIED BY FLOOR TRUSS MANUFACTURER.

NOTE: FLOOR FRAMING INFO REFER TO SHOP DRAWINGS FOR ALL TRUSS–JOIST INFORMATION AND DETAILS. UNLESS OTHERWISE NOTED.

INDICATES FIRE RATED WALL ASSEMBLY

It is the builder's complete responsibility to ensure that all plans submitted for approval fully comply with the Architectural Guidelines and all applicable regulations and requirements including zoning provisions and any provisions in the subdivision agreement. The Control Architect is not responsible in any way for examining or approving site (lotting) plans or working drawings with respect to any zoning or building code or permit matter or that any house can be properly built or located on its lot.

This is to certify that these plans comply with the applicable Architectural Design Guidelines approved by the Town of BRADFORD / WEST GWILLIMBURY.

| no. | description | date | by |
|---|---|---|---|
| 9 | . | . | . |
| 8 | . | . | . |
| 7 | . | . | . |
| 6 | . | . | . |
| 5 | . | . | . |
| 4 | . | . | . |
| 3 | . | . | . |
| 2 | REVISED AS PER ENG'S COMMENTS | APR 30–15 | RC |
| 1 | ISSUED FOR CLIENT REVIEW | 14–08–30 | LM |

The undersigned has reviewed and takes responsibility for this design and has the qualifications and meets the requirements set out in the Ontario Building Code to be a Designer.

qualification information

name: Wellington Jno–Baptiste — signature — BCIN: 25591

registration information: VA3 Design Inc. — 42658

Contractor must verify all dimensions on the job and report any discrepancy to the Designer before proceeding with the work. All drawings and specifications are instruments of service and the property of the Designer which must be returned at the completion of the work. Drawings are not to be scaled.

VA3 DESIGN
300A Wilson Avenue
Toronto ON M3H 1S8
t 416.630.2255 f 416.630.4782
va3design.com

**BAYVIEW WELLINGTON**

**S42–3**
RIDEAU 3

project name: GREEN VALLEY ESTATES
municipality: BRADFORD, ON.
project no.: 13045

date: 2014–04
GROUND FLOOR PLAN ELEV. 'A'
drawing no.: 2

drawn by: LM
checked by: –
scale: 3/16" = 1'–0"
file name: 13045–S42–3

RICHARD – H:\ARCHIVE\WORKING\2013\13045.BW\units\42'\13045–S42–3.dwg – Wed – Jun 3 2015 – 10:37 AM

All drawings specifications, related documents and design are the copyright property of VA3 DESIGN. Reproduction of this property in whole or in part is strictly prohibited without VA3 DESIGN's written permission.

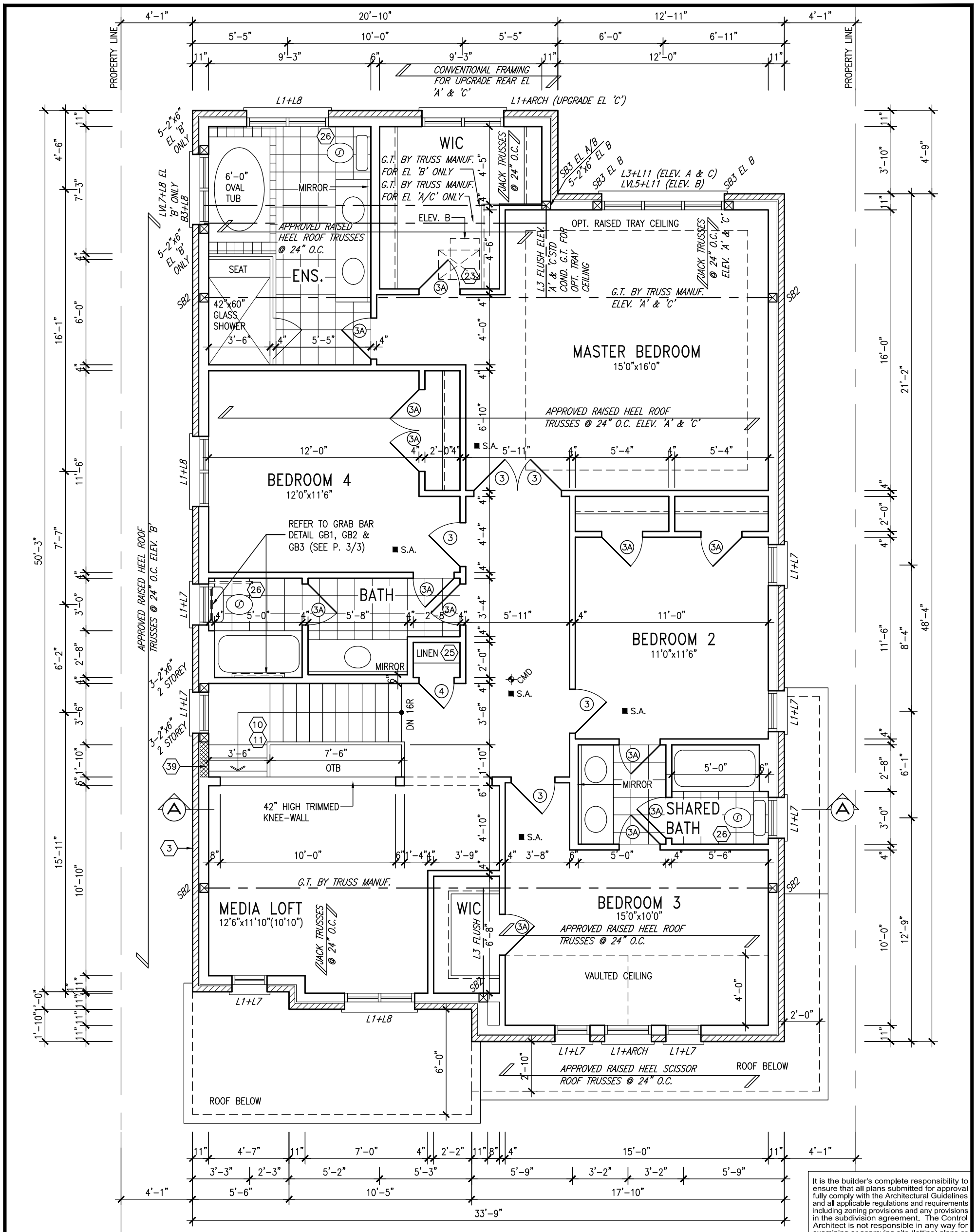


# STD. 4 BEDROOM SECOND FLOOR PLAN 'A'

GB NOTE:

**STUD WALL REINFORCEMENT FOR FUTURE GRAB BARS IN MAIN BATHROOM**

REINFORCEMENT OF STUD WALLS SHALL BE INSTALLED ADJACENT TO WATER CLOSETS AND SHOWER OR BATHTUB IN MAIN BATHROOM. REFER TO OBC. 9.5.2.3, 3.8.3.8.(1)(d) & 3.8.3.13.(1)(f). AND DETAILS PROVIDED

NOTE: ROOF FRAMING

ROOF TRUSS INFORMATION REFER TO ROOF TRUSS SHOP DRAWINGS FOR ALL ROOF FRAMING INFORMATION UNLESS OTHERWISE NOTED.

It is the builder's complete responsibility to ensure that all plans submitted for approval fully comply with the Architectural Guidelines and all applicable regulations and requirements including zoning provisions and any provisions in the subdivision agreement. The Control Architect is not responsible in any way for examining or approving site (lotting) plans or working drawings with respect to any zoning or building code or permit matter or that any house can be properly built or located on its lot.

This is to certify that these plans comply with the applicable Architectural Design Guidelines approved by the Town of BRADFORD / WEST GWILLIMBURY.

| no. | description | date | by |
|---|---|---|---|
| 9 | . | . | . |
| 8 | . | . | . |
| 7 | . | . | . |
| 6 | . | . | . |
| 5 | . | . | . |
| 4 | . | . | . |
| 3 | . | . | . |
| 2 | REVISED AS PER ENG'S COMMENTS | APR 30-15 | RC |
| 1 | ISSUED FOR CLIENT REVIEW | 14-08-30 | LM |

The undersigned has reviewed and takes responsibility for this design and has the qualifications and meets the requirements set out in the Ontario Building Code to be a Designer.

qualification information
Wellington Jno-Baptiste — signature — BCIN 25591
name — registration information
VA3 Design Inc. — 42658

Contractor must verify all dimensions on the job and report any discrepancy to the Designer before proceeding with the work. All drawings and specifications are instruments of service and the property of the Designer which must be returned at the completion of the work. Drawings are not to be scaled.

VA3 DESIGN
300A Wilson Avenue
Toronto ON M3H 1S8
t 416.630.2255 f 416.630.4782
va3design.com

**BAYVIEW WELLINGTON**

**S42-3**
RIDEAU 3

project name: GREEN VALLEY ESTATES
municipality: BRADFORD, ON.
project no.: 13045

date: 2014-04
STD. 4 BEDROOM SECOND FLOOR PLAN ELEV. 'A'
drawing no.: 3
drawn by: LM
checked by: –
scale: 3/16" = 1'-0"
file name: 13045-S42-3

RICHARD – H:\ARCHIVE\WORKING\2013\13045.BW\units\42'\13045-S42-3.dwg – Wed – Jun 3 2015 – 10:37 AM

All drawings specifications, related documents and design are the copyright property of VA3 DESIGN. Reproduction of this property in whole or in part is strictly prohibited without VA3 DESIGN's written permission.

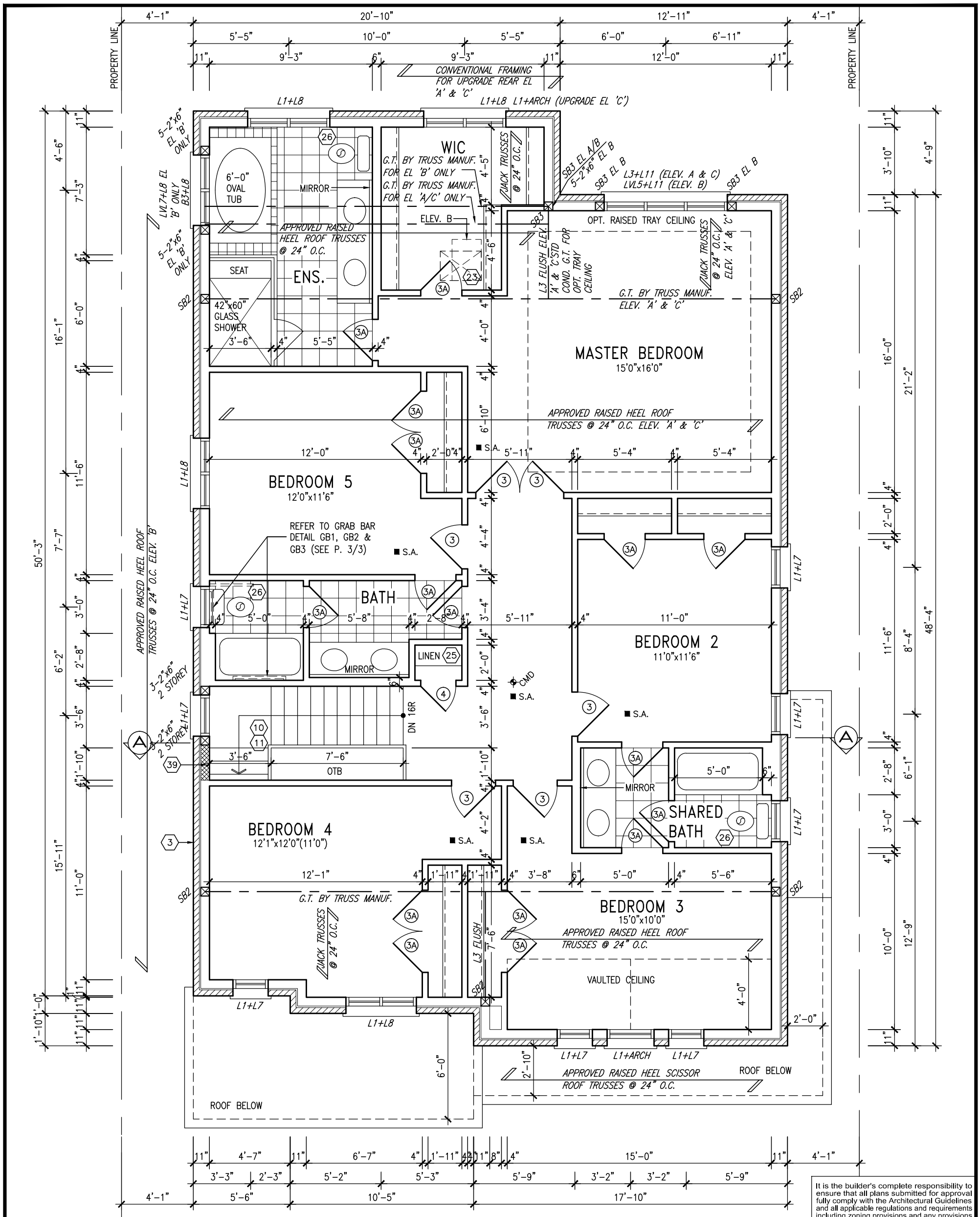


# OPT. 5 BEDROOM SECOND FLOOR PLAN 'A'

It is the builder's complete responsibility to ensure that all plans submitted for approval fully comply with the Architectural Guidelines and all applicable regulations and requirements including zoning provisions and any provisions in the subdivision agreement. The Control Architect is not responsible in any way for examining or approving site (lotting) plans or working drawings with respect to any zoning or building code or permit matter or that any house can be properly built or located on its lot.

This is to certify that these plans comply with the applicable Architectural Design Guidelines approved by the Town of BRADFORD / WEST GWILLIMBURY.

GB NOTE:

**STUD WALL REINFORCEMENT FOR FUTURE GRAB BARS IN MAIN BATHROOM**

REINFORCEMENT OF STUD WALLS SHALL BE INSTALLED ADJACENT TO WATER CLOSETS AND SHOWER OR BATHTUB IN MAIN BATHROOM. REFER TO OBC. 9.5.2.3, 3.8.3.8.(1)(d) & 3.8.3.13.(1)(f). AND DETAILS PROVIDED

NOTE: ROOF FRAMING

ROOF TRUSS INFORMATION REFER TO ROOF TRUSS SHOP DRAWINGS FOR ALL ROOF FRAMING INFORMATION UNLESS OTHERWISE NOTED.

| no. | description | date | by |
|---|---|---|---|
| 9 | . | . | . |
| 8 | . | . | . |
| 7 | . | . | . |
| 6 | . | . | . |
| 5 | . | . | . |
| 4 | . | . | . |
| 3 | . | . | . |
| 2 | REVISED AS PER ENG'S COMMENTS | APR 30-15 | RC |
| 1 | ISSUED FOR CLIENT REVIEW | 14-08-30 | LM |

The undersigned has reviewed and takes responsibility for this design and has the qualifications and meets the requirements set out in the Ontario Building Code to be a Designer.

qualification information
name: Wellington Jno-Baptiste — signature — BCIN: 25591
registration information
VA3 Design Inc. — 42658

Contractor must verify all dimensions on the job and report any discrepancy to the Designer before proceeding with the work. All drawings and specifications are instruments of service and the property of the Designer which must be returned at the completion of the work. Drawings are not to be scaled.

VA3 DESIGN
300A Wilson Avenue
Toronto ON M3H 1S8
t 416.630.2255 f 416.630.4782
va3design.com

**BAYVIEW WELLINGTON**

**S42-3**
RIDEAU 3

project name: GREEN VALLEY ESTATES
municipality: BRADFORD, ON.
project no.: 13045

date: 2014-04
OPT. 5 BEDROOM SECOND FLOOR PLAN ELEV. 'A'
drawing no.: 4
drawn by: LM
checked by: –
scale: 3/16" = 1'-0"
file name: 13045-S42-3

RICHARD – H:\ARCHIVE\WORKING\2013\13045.BW\units\42'\13045-S42-3.dwg – Wed – Jun 3 2015 – 10:37 AM

All drawings specifications, related documents and design are the copyright property of VA3 DESIGN. Reproduction of this property in whole or in part is strictly prohibited without VA3 DESIGN's written permission.

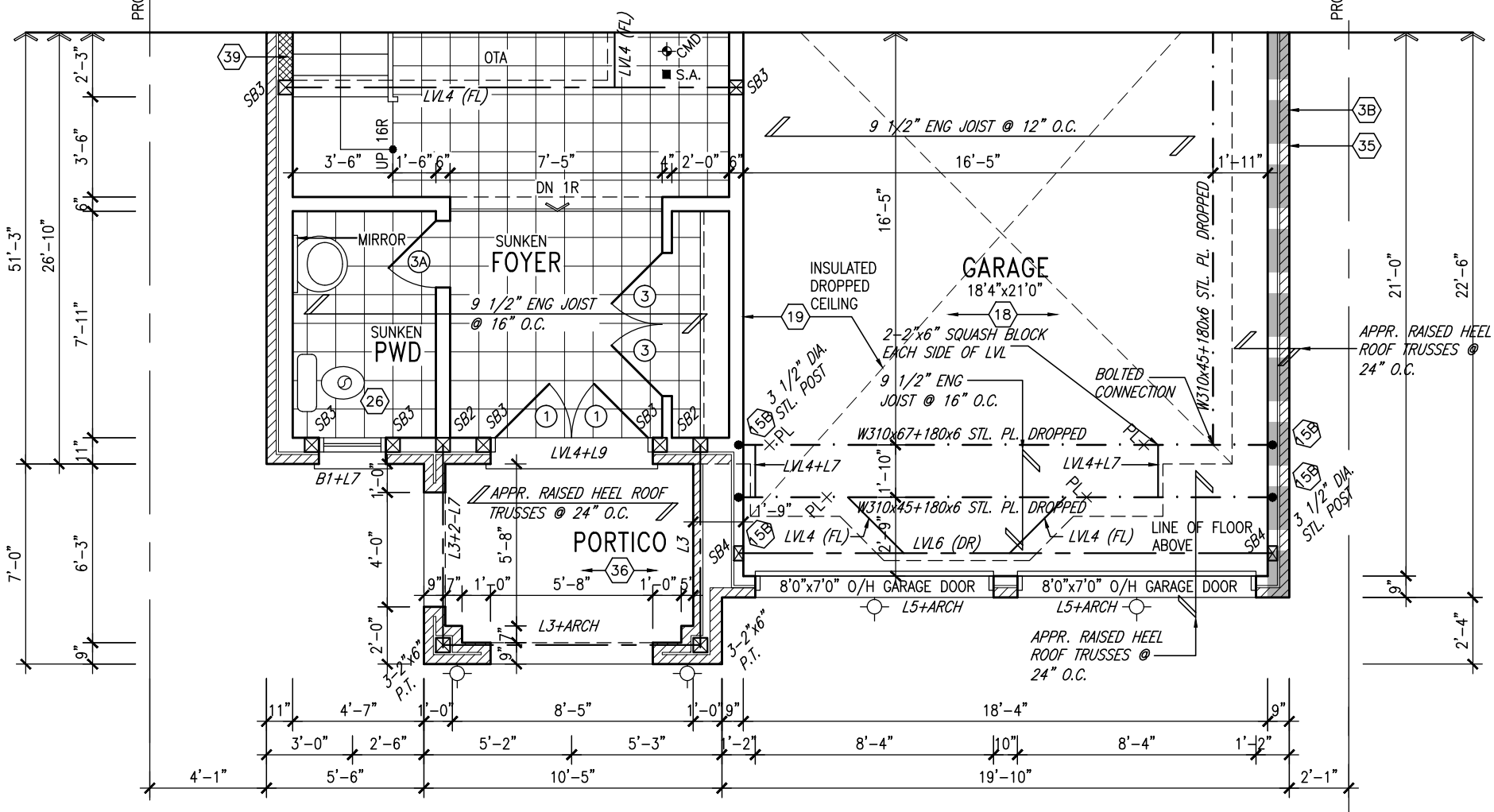


# PARTIAL GROUND FLOOR PLAN 'B'

INDICATES FIRE RATED WALL ASSEMBLY

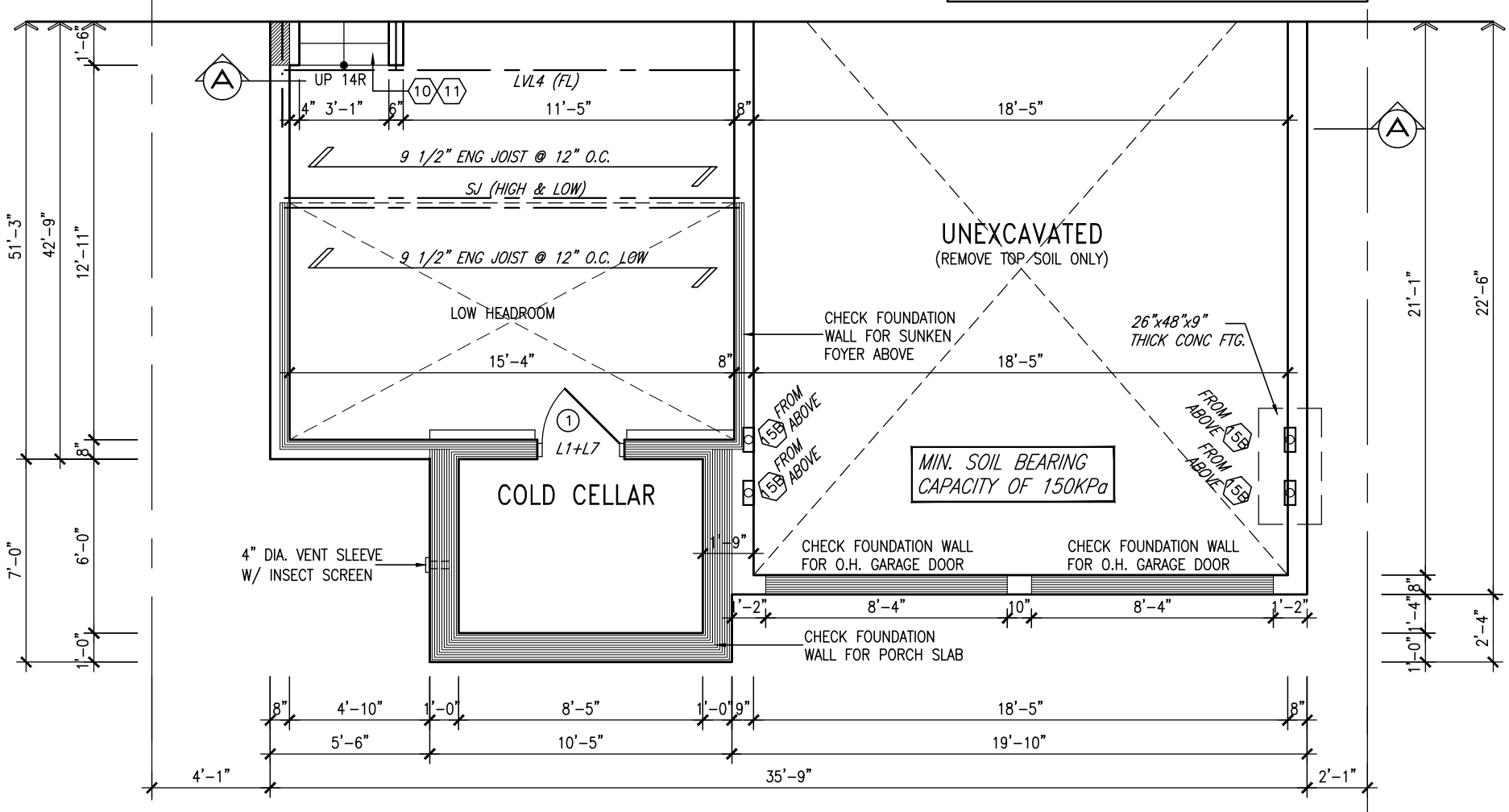


# PARTIAL BASEMENT PLAN 'B'

NOTE: SPACE ALL FLOOR JOISTS @ 12" O.C. UNDER ALL CERAMIC TILE AREAS.

NOTE: ALL LVL'S SUPPORTING FLOOR LOADS ARE TO BE SPECIFIED BY FLOOR TRUSS MANUFACTURER.

NOTE: FLOOR FRAMING INFO REFER TO SHOP DRAWINGS FOR ALL TRUSS-JOIST INFORMATION AND DETAILS. UNLESS OTHERWISE NOTED.

It is the builder's complete responsibility to ensure that all plans submitted for approval fully comply with the Architectural Guidelines and all applicable regulations and requirements including zoning provisions and any provisions in the subdivision agreement. The Control Architect is not responsible in any way for examining or approving site (lotting) plans or working drawings with respect to any zoning or building code or permit matter or that any house can be properly built or located on its lot.

This is to certify that these plans comply with the applicable Architectural Design Guidelines approved by the Town of BRADFORD / WEST GWILLIMBURY.

| no. | description | date | by |
|---|---|---|---|
| 9 | . | . | . |
| 8 | . | . | . |
| 7 | . | . | . |
| 6 | . | . | . |
| 5 | . | . | . |
| 4 | . | . | . |
| 3 | . | . | . |
| 2 | REVISED AS PER ENG'S COMMENTS | APR 30-15 | RC |
| 1 | ISSUED FOR CLIENT REVIEW | 14-08-30 | LM |

The undersigned has reviewed and takes responsibility for this design and has the qualifications and meets the requirements set out in the Ontario Building Code to be a Designer.

qualification information
name: Wellington Jno-Baptiste — signature — BCIN: 25591
registration information: VA3 Design Inc. — 42658

Contractor must verify all dimensions on the job and report any discrepancy to the Designer before proceeding with the work. All drawings and specifications are instruments of service and the property of the Designer which must be returned at the completion of the work. Drawings are not to be scaled.

VA3 DESIGN
300A Wilson Avenue
Toronto ON M3H 1S8
t 416.630.2255 f 416.630.4782
va3design.com

**BAYVIEW WELLINGTON**

**S42-3**
RIDEAU 3

project name: GREEN VALLEY ESTATES
municipality: BRADFORD, ON.
project no.: 13045

date: 2014-04
PARTIAL PLANS ELEVATION 'B'
drawing no.: 5

drawn by: LM
checked by: -
scale: 3/16" = 1'-0"
file name: 13045-S42-3

RICHARD - H:\ARCHIVE\WORKING\2013\13045.BW\units\42"\13045-S42-3.dwg - Wed - Jun 3 2015 - 10:37 AM

All drawings specifications, related documents and design are the copyright property of VA3 DESIGN. Reproduction of this property in whole or in part is strictly prohibited without VA3 DESIGN's written permission.

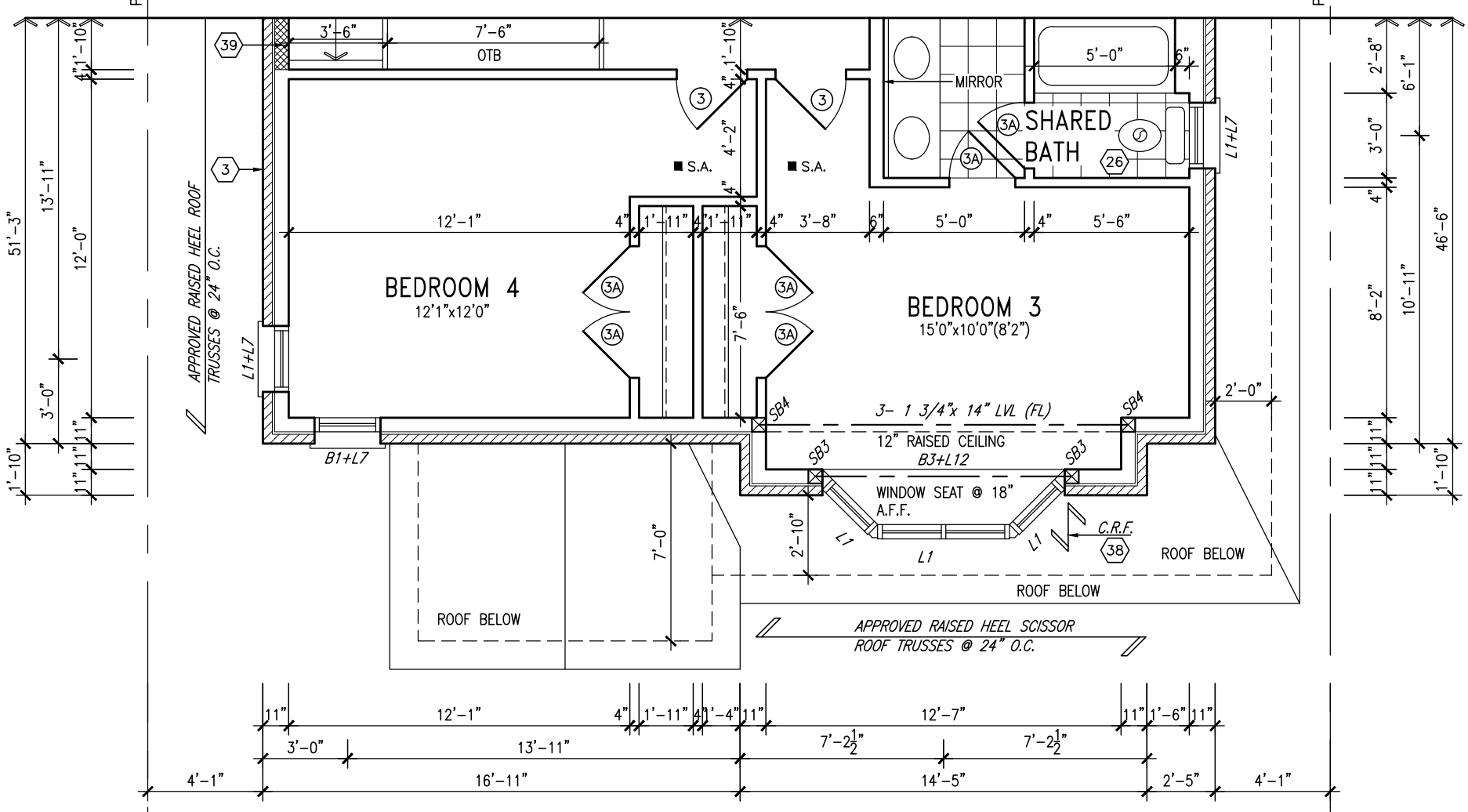


PARTIAL OPT. 5 BED. SECOND FLOOR PLAN 'B'

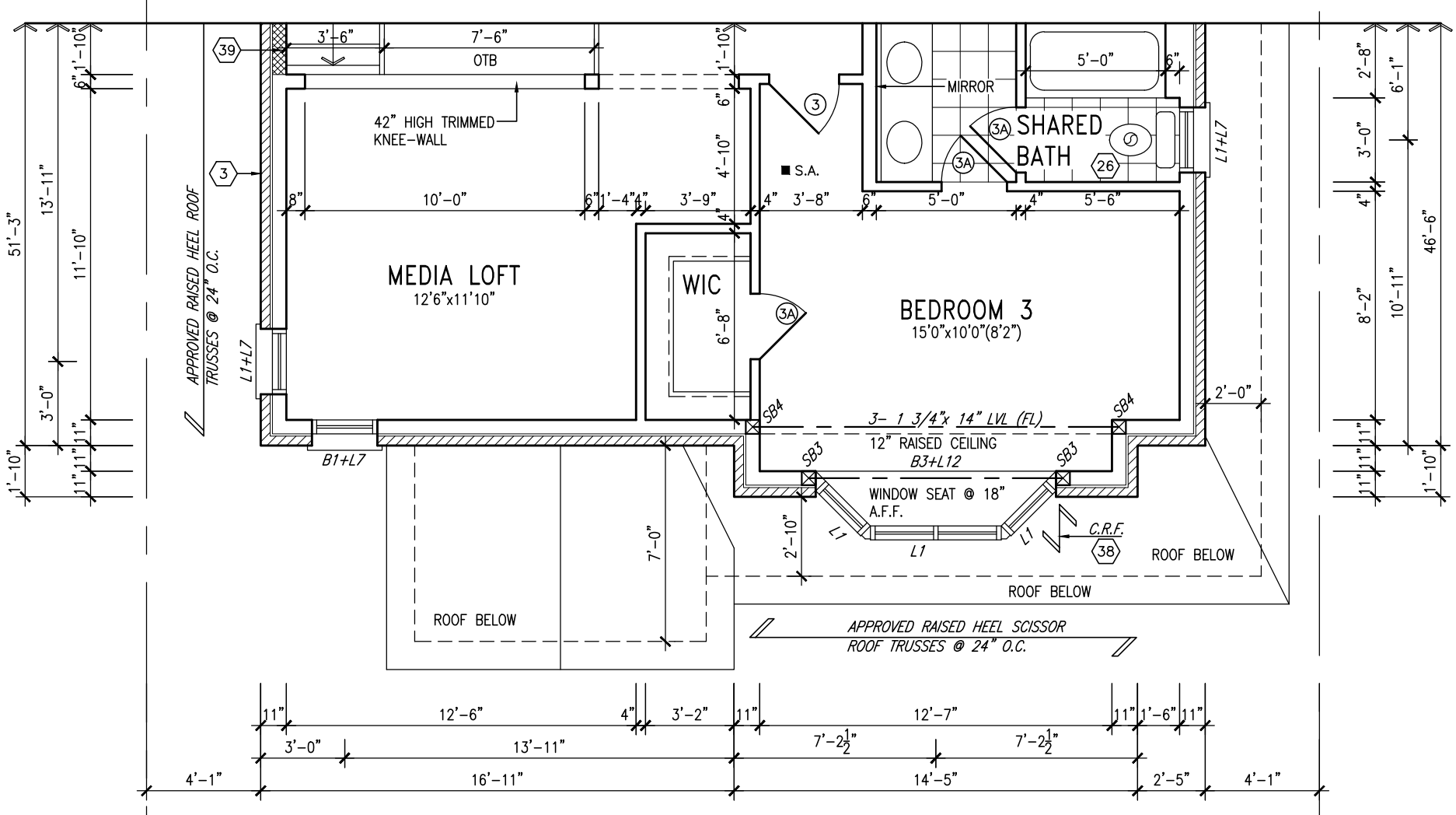


PARTIAL STD. 4 BED. SECOND FLOOR PLAN 'B'

It is the builder's complete responsibility to ensure that all plans submitted for approval fully comply with the Architectural Guidelines and all applicable regulations and requirements including zoning provisions and any provisions in the subdivision agreement. The Control Architect is not responsible in any way for examining or approving site (lotting) plans or working drawings with respect to any zoning or building code or permit matter or that any house can be properly built or located on its lot.

This is to certify that these plans comply with the applicable Architectural Design Guidelines approved by the Town of BRADFORD / WEST GWILLIMBURY.

GB NOTE:

**STUD WALL REINFORCEMENT FOR FUTURE GRAB BARS IN MAIN BATHROOM**

REINFORCEMENT OF STUD WALLS SHALL BE INSTALLED ADJACENT TO WATER CLOSETS AND SHOWER OR BATHTUB IN MAIN BATHROOM. REFER TO OBC. 9.5.2.3, 3.8.3.8.(1)(d) & 3.8.3.13.(1)(f). AND DETAILS PROVIDED

NOTE: ROOF FRAMING

ROOF TRUSS INFORMATION REFER TO ROOF TRUSS SHOP DRAWINGS FOR ALL ROOF FRAMING INFORMATION UNLESS OTHERWISE NOTED.

| no. | description | date | by |
|---|---|---|---|
| 9 | . | . | . |
| 8 | . | . | . |
| 7 | . | . | . |
| 6 | . | . | . |
| 5 | . | . | . |
| 4 | . | . | . |
| 3 | . | . | . |
| 2 | REVISED AS PER ENG'S COMMENTS | APR 30-15 | RC |
| 1 | ISSUED FOR CLIENT REVIEW | 14-08-30 | LM |

The undersigned has reviewed and takes responsibility for this design and has the qualifications and meets the requirements set out in the Ontario Building Code to be a Designer.

qualification information
Wellington Jno-Baptiste — signature — BCIN 25591
name
registration information
VA3 Design Inc. 42658

Contractor must verify all dimensions on the job and report any discrepancy to the Designer before proceeding with the work. All drawings and specifications are instruments of service and the property of the Designer which must be returned at the completion of the work. Drawings are not to be scaled.

VA3 DESIGN
300A Wilson Avenue
Toronto ON M3H 1S8
t 416.630.2255 f 416.630.4782
va3design.com

**BAYVIEW WELLINGTON**

**S42-3**
RIDEAU 3

project name: GREEN VALLEY ESTATES
municipality: BRADFORD, ON.
project no.: 13045

date: 2014-04
PARTIAL PLANS ELEVATION 'B'
drawing no.: 6
drawn by: LM
checked by: -
scale: 3/16" = 1'-0"
file name: 13045-S42-3
RICHARD – H:\ARCHIVE\WORKING\2013\13045.BW\units\42'\13045-S42-3.dwg – Wed – Jun 3 2015 – 10:37 AM

All drawings specifications, related documents and design are the copyright property of VA3 DESIGN. Reproduction of this property in whole or in part is strictly prohibited without VA3 DESIGN's written permission.

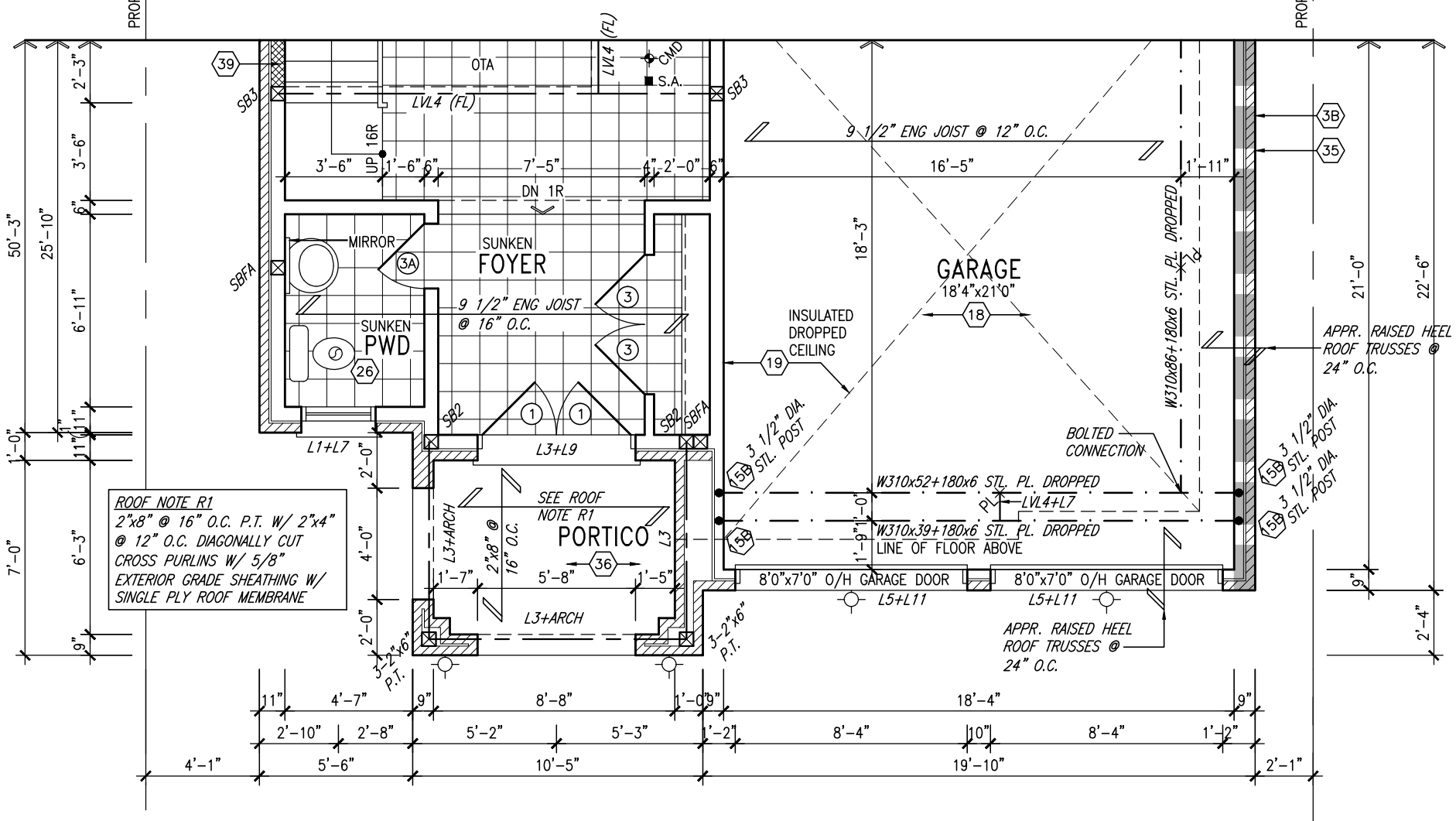


PARTIAL GROUND FLOOR PLAN 'C'

INDICATES FIRE RATED WALL ASSEMBLY

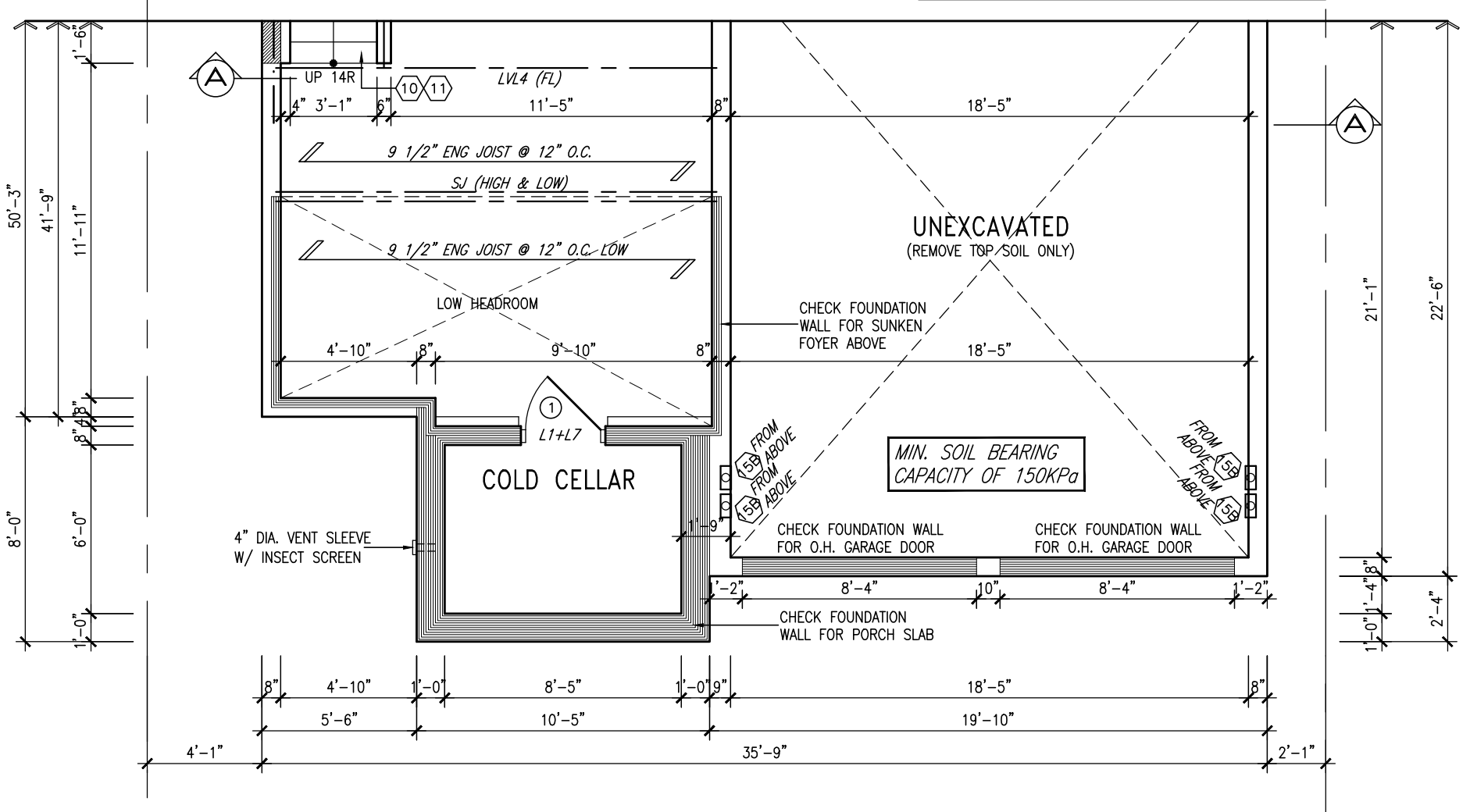


PARTIAL BASEMENT PLAN 'C'

NOTE: SPACE ALL FLOOR JOISTS @ 12" O.C. UNDER ALL CERAMIC TILE AREAS.

NOTE: ALL LVL'S SUPPORTING FLOOR LOADS ARE TO BE SPECIFIED BY FLOOR TRUSS MANUFACTURER.

NOTE: FLOOR FRAMING INFO REFER TO SHOP DRAWINGS FOR ALL TRUSS-JOIST INFORMATION AND DETAILS. UNLESS OTHERWISE NOTED.

It is the builder's complete responsibility to ensure that all plans submitted for approval fully comply with the Architectural Guidelines and all applicable regulations and requirements including zoning provisions and any provisions in the subdivision agreement. The Control Architect is not responsible in any way for examining or approving site (lotting) plans or working drawings with respect to any zoning or building code or permit matter or that any house can be properly built or located on its lot.

This is to certify that these plans comply with the applicable Architectural Design Guidelines approved by the Town of BRADFORD / WEST GWILLIMBURY.

| no. | description | date | by |
|---|---|---|---|
| 9 | . | . | . |
| 8 | . | . | . |
| 7 | . | . | . |
| 6 | . | . | . |
| 5 | . | . | . |
| 4 | . | . | . |
| 3 | . | . | . |
| 2 | REVISED AS PER ENG'S COMMENTS | APR 30-15 | RC |
| 1 | ISSUED FOR CLIENT REVIEW | 14-08-30 | LM |

The undersigned has reviewed and takes responsibility for this design and has the qualifications and meets the requirements set out in the Ontario Building Code to be a Designer.

qualification information
name: Wellington Jno-Baptiste — signature — BCIN 25591
registration information: VA3 Design Inc. — 42658

Contractor must verify all dimensions on the job and report any discrepancy to the Designer before proceeding with the work. All drawings and specifications are instruments of service and the property of the Designer which must be returned at the completion of the work. Drawings are not to be scaled.

VA3 DESIGN
300A Wilson Avenue
Toronto ON M3H 1S8
t 416.630.2255 f 416.630.4782
va3design.com

# BAYVIEW WELLINGTON

S42-3
RIDEAU 3

project name: GREEN VALLEY ESTATES
municipality: BRADFORD, ON.
project no. 13045

date: 2014-04
PARTIAL PLANS ELEVATION 'C'
drawing no. 7

drawn by: LM
checked by: -
scale: 3/16" = 1'-0"
file name: 13045-S42-3

RICHARD - H:\ARCHIVE\WORKING\2013\13045.BW\units\42"\13045-S42-3.dwg - Wed - Jun 3 2015 - 10:37 AM

All drawings specifications, related documents and design are the copyright property of VA3 DESIGN. Reproduction of this property in whole or in part is strictly prohibited without VA3 DESIGN's written permission.

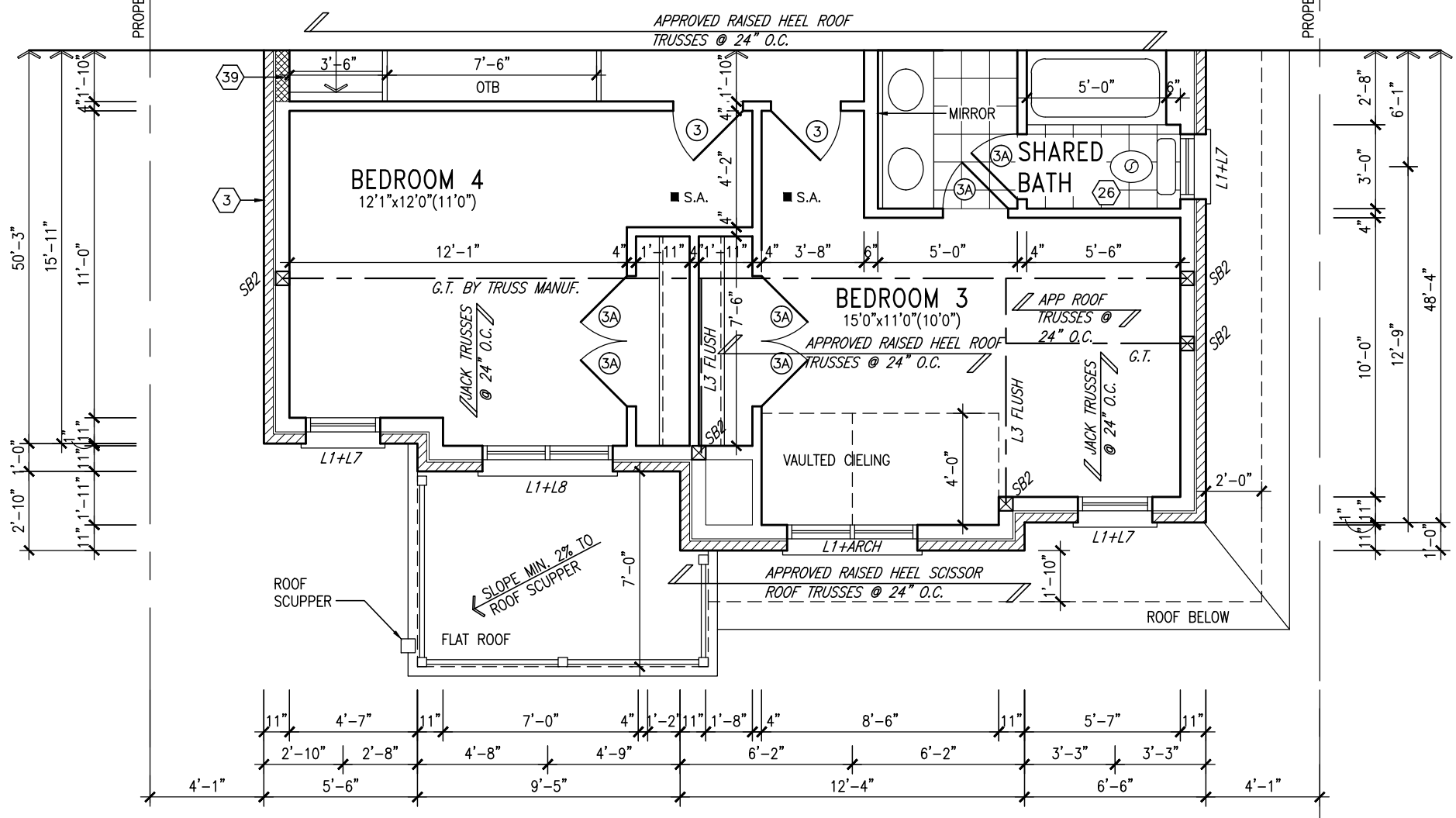


PARTIAL OPT. 5 BED. SECOND FLOOR PLAN 'C'

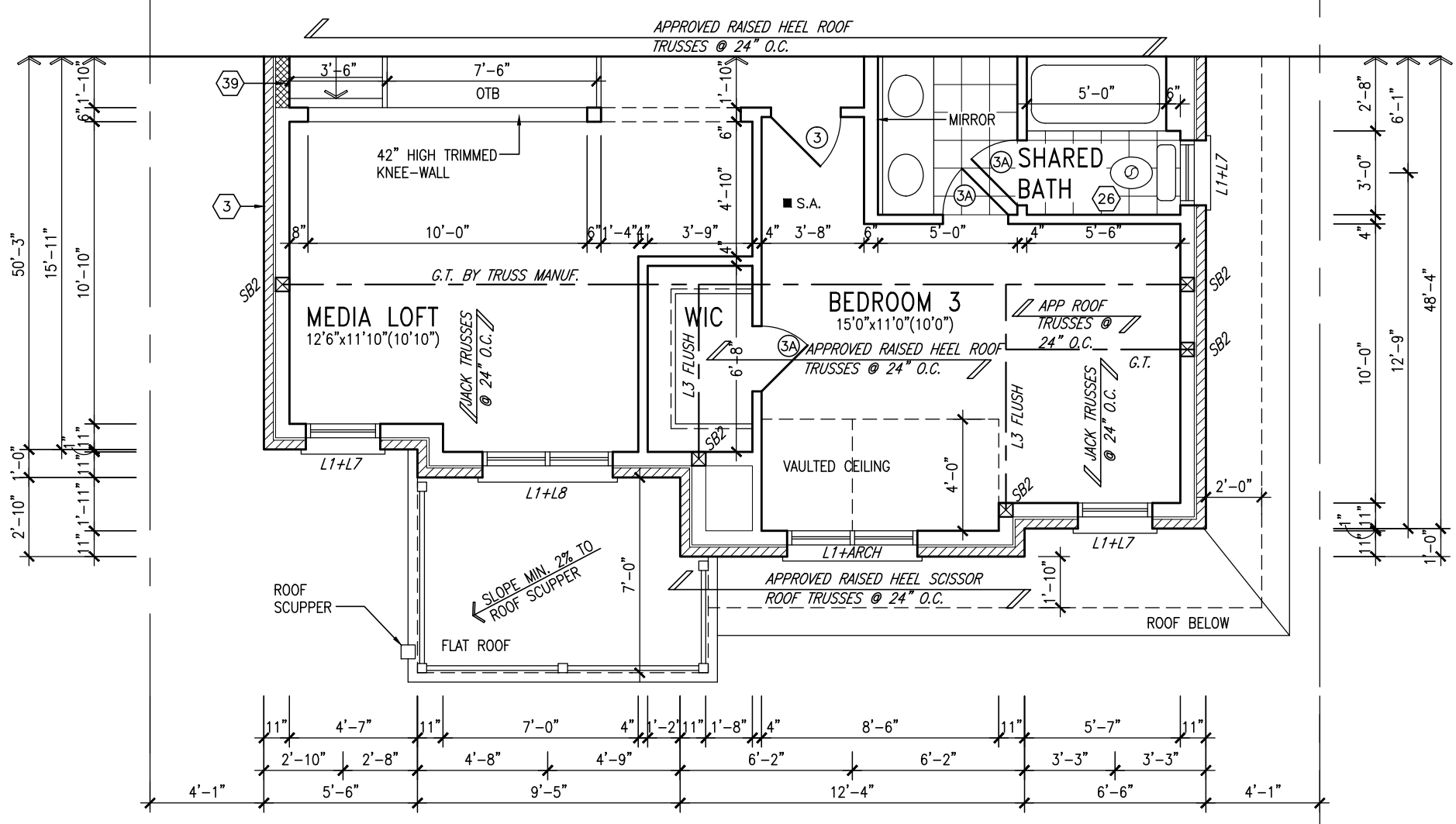


PARTIAL STD. 4 BED. SECOND FLOOR PLAN 'C'

It is the builder's complete responsibility to ensure that all plans submitted for approval fully comply with the Architectural Guidelines and all applicable regulations and requirements including zoning provisions and any provisions in the subdivision agreement. The Control Architect is not responsible in any way for examining or approving site (lotting) plans or working drawings with respect to any zoning or building code or permit matter or that any house can be properly built or located on its lot.

This is to certify that these plans comply with the applicable Architectural Design Guidelines approved by the Town of BRADFORD / WEST GWILLIMBURY.

GB NOTE:

**STUD WALL REINFORCEMENT FOR FUTURE GRAB BARS IN MAIN BATHROOM**

REINFORCEMENT OF STUD WALLS SHALL BE INSTALLED ADJACENT TO WATER CLOSETS AND SHOWER OR BATHTUB IN MAIN BATHROOM. REFER TO OBC. 9.5.2.3, 3.8.3.8.(1)(d) & 3.8.3.13.(1)(f). AND DETAILS PROVIDED

NOTE: ROOF FRAMING

ROOF TRUSS INFORMATION REFER TO ROOF TRUSS SHOP DRAWINGS FOR ALL ROOF FRAMING INFORMATION UNLESS OTHERWISE NOTED.

| no. | description | date | by |
|---|---|---|---|
| 9 | . | . | . |
| 8 | . | . | . |
| 7 | . | . | . |
| 6 | . | . | . |
| 5 | . | . | . |
| 4 | . | . | . |
| 3 | . | . | . |
| 2 | REVISED AS PER ENG'S COMMENTS | APR 30–15 | RC |
| 1 | ISSUED FOR CLIENT REVIEW | 14–08–30 | LM |

The undersigned has reviewed and takes responsibility for this design and has the qualifications and meets the requirements set out in the Ontario Building Code to be a Designer.

qualification information
Wellington Jno-Baptiste — signature — BCIN 25591
name — registration information
VA3 Design Inc. — 42658

Contractor must verify all dimensions on the job and report any discrepancy to the Designer before proceeding with the work. All drawings and specifications are instruments of service and the property of the Designer which must be returned at the completion of the work. Drawings are not to be scaled.

VA3 DESIGN
300A Wilson Avenue
Toronto ON M3H 1S8
t 416.630.2255 f 416.630.4782
va3design.com

# BAYVIEW WELLINGTON

S42–3
RIDEAU 3

project name: GREEN VALLEY ESTATES
municipality: BRADFORD, ON.
project no.: 13045

date: 2014–04
PARTIAL PLANS ELEVATION 'C'
drawing no.: 8

drawn by: LM
checked by: –
scale: 3/16" = 1'–0"
file name: 13045–S42–3

RICHARD – H:\ARCHIVE\WORKING\2013\13045.BW\units\42'\13045–S42–3.dwg – Wed – Jun 3 2015 – 10:37 AM

All drawings specifications, related documents and design are the copyright property of VA3 DESIGN. Reproduction of this property in whole or in part is strictly prohibited without VA3 DESIGN's written permission.

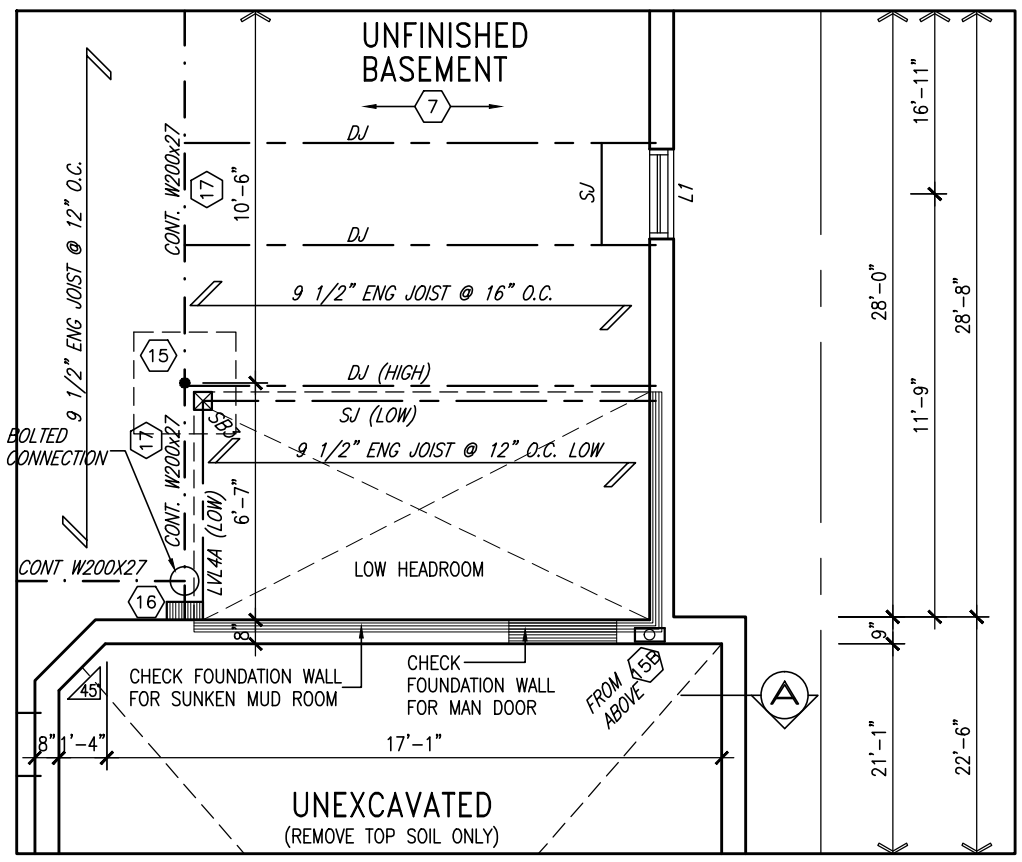


PARTIAL BASEMENT PLAN W/ SUNKEN LAUNDRY 1R CONDITION

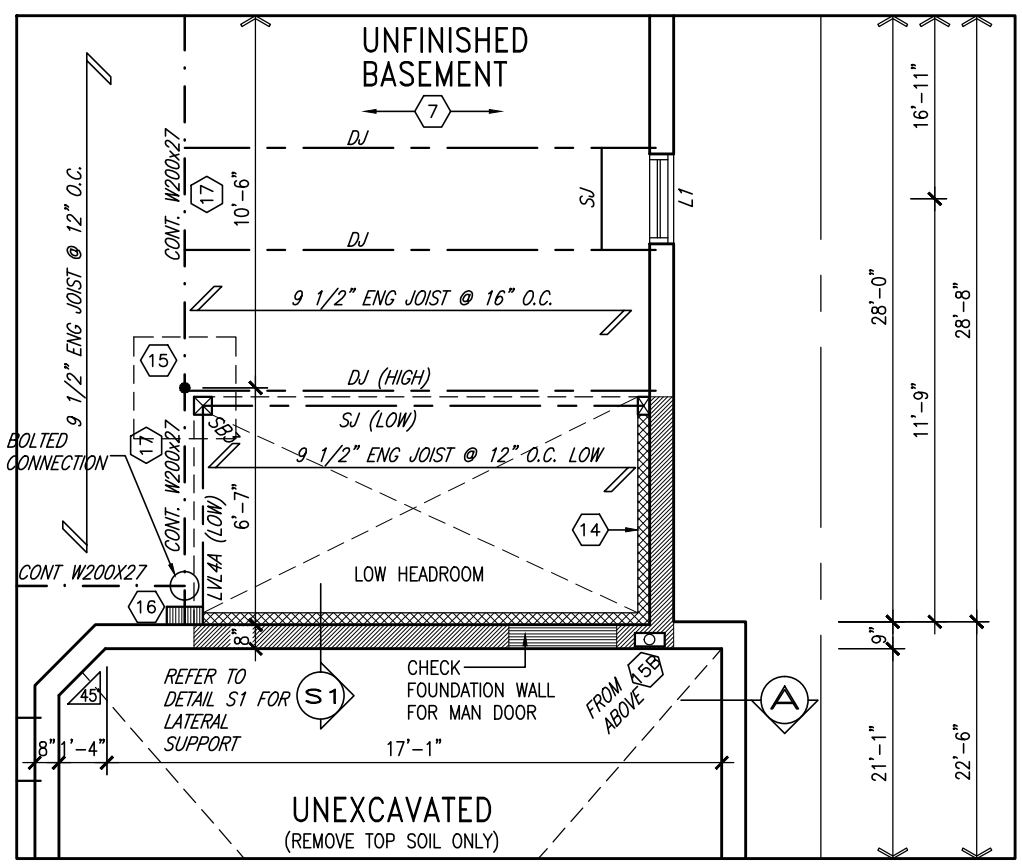


PARTIAL BASEMENT PLAN W/ SUNKEN LAUNDRY 2R-3R CONDITION

It is the builder's complete responsibility to ensure that all plans submitted for approval fully comply with the Architectural Guidelines and all applicable regulations and requirements including zoning provisions and any provisions in the subdivision agreement. The Control Architect is not responsible in any way for examining or approving site (lotting) plans or working drawings with respect to any zoning or building code or permit matter or that any house can be properly built or located on its lot.

This is to certify that these plans comply with the applicable Architectural Design Guidelines approved by the Town of BRADFORD / WEST GWILLIMBURY.

| no. | description | date | by |
|---|---|---|---|
| 9 | . | . | . |
| 8 | . | . | . |
| 7 | . | . | . |
| 6 | . | . | . |
| 5 | . | . | . |
| 4 | . | . | . |
| 3 | . | . | . |
| 2 | REVISED AS PER ENG'S COMMENTS | APR 30-15 | RC |
| 1 | ISSUED FOR CLIENT REVIEW | 14-08-30 | LM |

The undersigned has reviewed and takes responsibility for this design and has the qualifications and meets the requirements set out in the Ontario Building Code to be a Designer.

qualification information

name: Wellington Jno-Baptiste — signature — BCIN: 25591

registration information: VA3 Design Inc. — 42658

Contractor must verify all dimensions on the job and report any discrepancy to the Designer before proceeding with the work. All drawings and specifications are instruments of service and the property of the Designer which must be returned at the completion of the work. Drawings are not to be scaled.

VA3 DESIGN
300A Wilson Avenue
Toronto ON M3H 1S8
t 416.630.2255 f 416.630.4782
va3design.com

# BAYVIEW WELLINGTON

S42-3
RIDEAU 3

project name: GREEN VALLEY ESTATES — municipality: BRADFORD, ON. — project no. 13045

date: 2014-04 — PARTIAL PLANS FOR OPTIONAL OPT. SUNKEN LAUNDRY — drawing no. 9

drawn by: LM — checked by: - — scale: 3/16" = 1'-0" — file name: 13045-S42-3

RICHARD - H:\ARCHIVE\WORKING\2013\13045.BW\units\42'\13045-S42-3.dwg - Wed - Jun 3 2015 - 10:37 AM

All drawings specifications, related documents and design are the copyright property of VA3 DESIGN. Reproduction of this property in whole or in part is strictly prohibited without VA3 DESIGN's written permission.

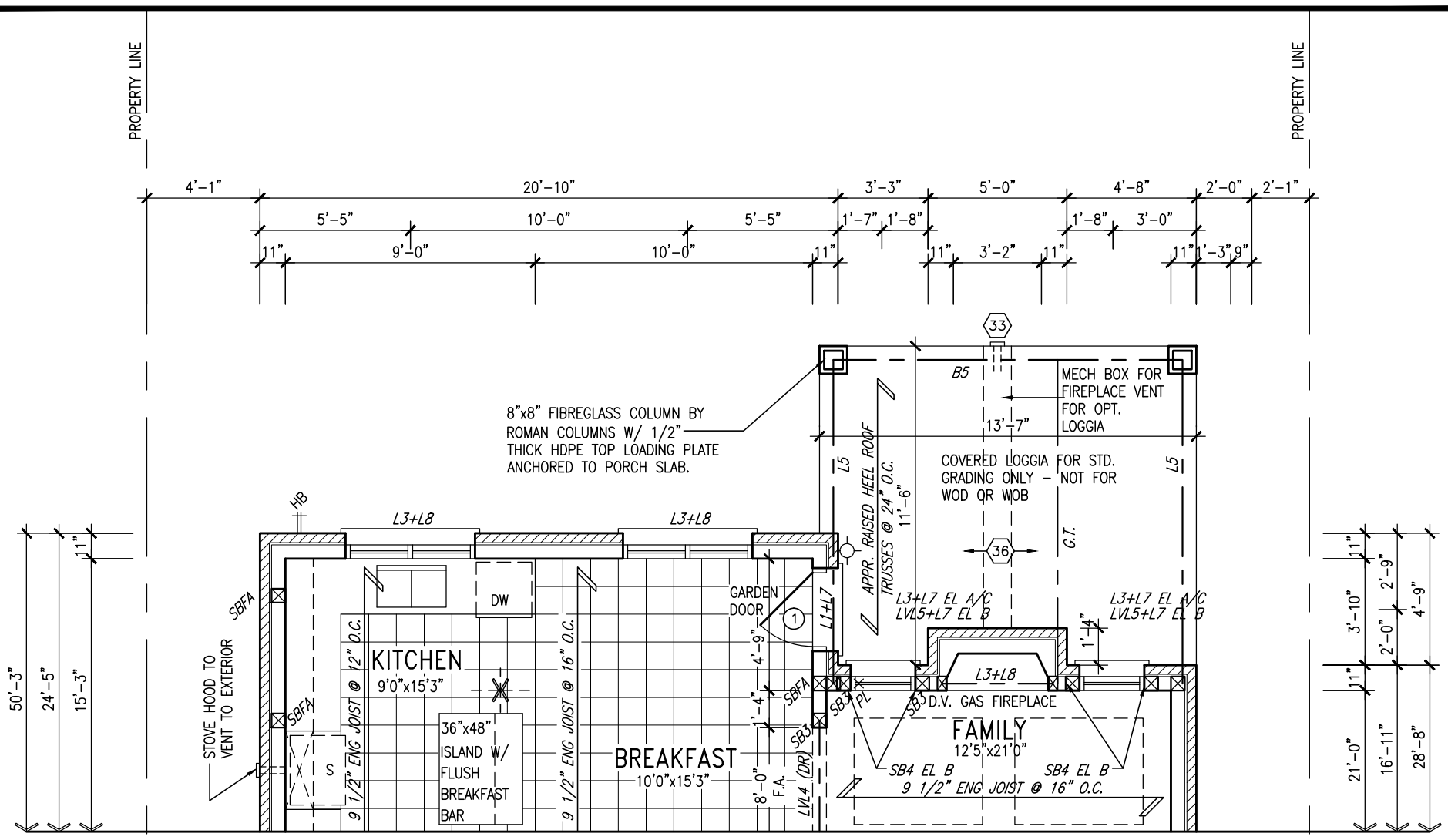


PARTIAL GROUND FLOOR PLAN W/ OPT. LOGGIA

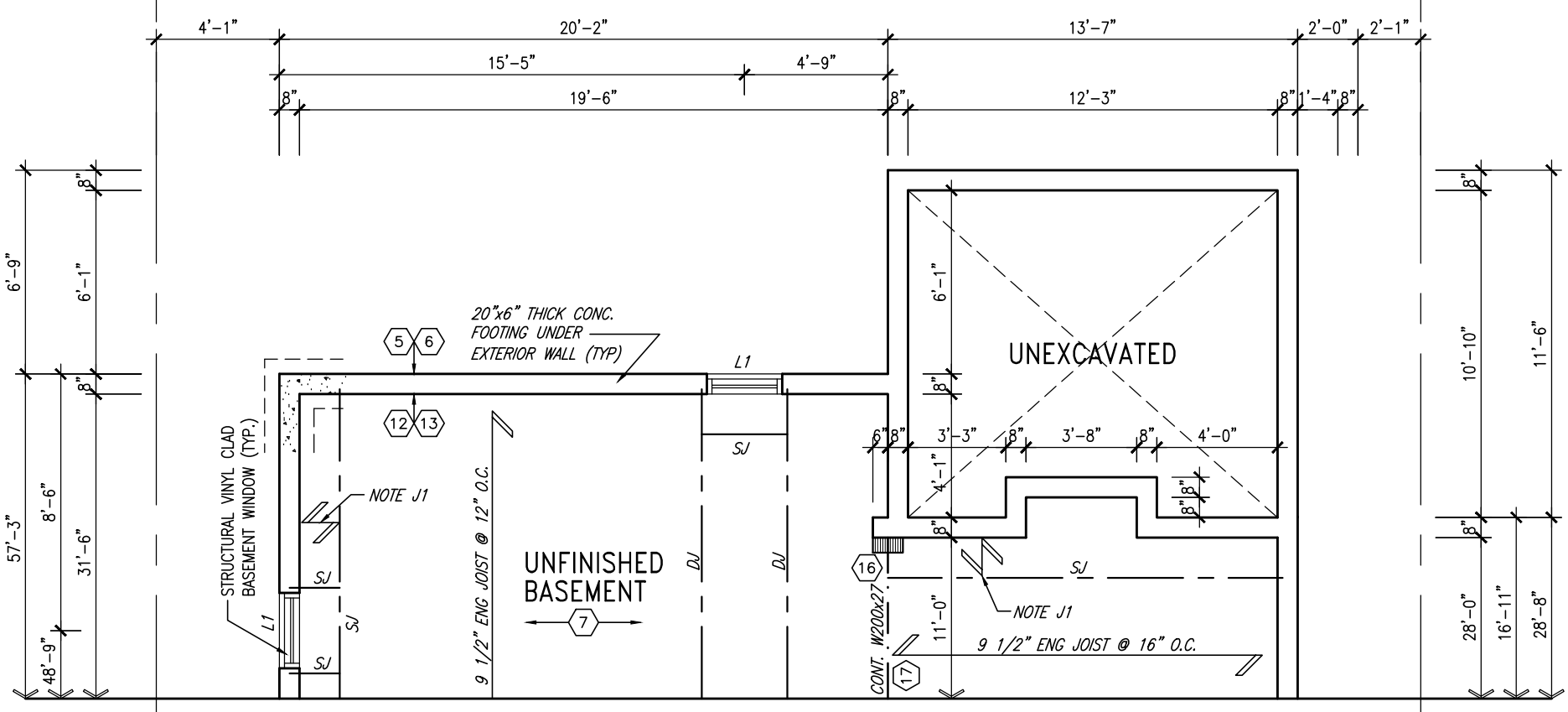


PARTIAL BASEMENT PLAN W/ OPT. LOGGIA

It is the builder's complete responsibility to ensure that all plans submitted for approval fully comply with the Architectural Guidelines and all applicable regulations and requirements including zoning provisions and any provisions in the subdivision agreement. The Control Architect is not responsible in any way for examining or approving site (lotting) plans or working drawings with respect to any zoning or building code or permit matter or that any house can be properly built or located on its lot.

This is to certify that these plans comply with the applicable Architectural Design Guidelines approved by the Town of BRADFORD / WEST GWILLIMBURY.

| no. | description | date | by |
|---|---|---|---|
| 9 | . | . | . |
| 8 | . | . | . |
| 7 | . | . | . |
| 6 | . | . | . |
| 5 | . | . | . |
| 4 | . | . | . |
| 3 | . | . | . |
| 2 | REVISED AS PER ENG'S COMMENTS | APR 30–15 | RC |
| 1 | ISSUED FOR CLIENT REVIEW | 14–08–30 | LM |

The undersigned has reviewed and takes responsibility for this design and has the qualifications and meets the requirements set out in the Ontario Building Code to be a Designer.

qualification information
name: Wellington Jno–Baptiste — signature — BCIN 25591
registration information
VA3 Design Inc. — 42658

Contractor must verify all dimensions on the job and report any discrepancy to the Designer before proceeding with the work. All drawings and specifications are instruments of service and the property of the Designer which must be returned at the completion of the work. Drawings are not to be scaled.

VA3 DESIGN
300A Wilson Avenue
Toronto ON M3H 1S8
t 416.630.2255 f 416.630.4782
va3design.com

# BAYVIEW WELLINGTON

S42–3
RIDEAU 3

project name: GREEN VALLEY ESTATES
municipality: BRADFORD, ON.
project no.: 13045

date: 2014–04
PARTIAL PLANS FOR OPTIONAL LOGGIA
drawn by: LM
checked by: –
scale: 3/16" = 1'–0"
file name: 13045–S42–3
drawing no.: 10

RICHARD – H:\ARCHIVE\WORKING\2013\13045.BW\units\42"\13045–S42–3.dwg – Wed – Jun 3 2015 – 10:37 AM

All drawings specifications, related documents and design are the copyright property of VA3 DESIGN. Reproduction of this property in whole or in part is strictly prohibited without VA3 DESIGN's written permission.

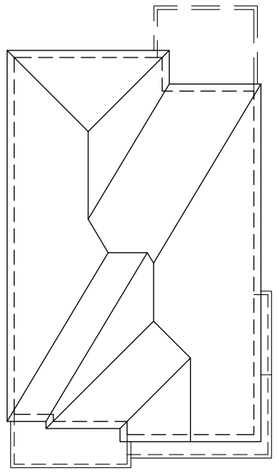

ROOF PLAN 'A'

FRONT ELEVATION 'A'

It is the builder's complete responsibility to ensure that all plans submitted for approval fully comply with the Architectural Guidelines and all applicable regulations and requirements including zoning provisions and any provisions in the subdivision agreement. The Control Architect is not responsible in any way for examining or approving site (lotting) plans or working drawings with respect to any zoning or building code or permit matter or that any house can be properly built or located on its lot.

This is to certify that these plans comply with the applicable Architectural Design Guidelines approved by the Town of BRADFORD / WEST GWILLIMBURY.

UNINSULATED OPENINGS (PER OBC. SB-12,2.1.1.(7)

| S42-3 ELEVATION A | ENERGY EFFICIENCY – OBC SB12 | | |
|---|---|---|---|
| ELEVATION | WALL AREA S.F. | OPENING S.F. | PERCENTAGE |
| FRONT | 696.00 S.F. | 80.92 S.F. | 11.63 % |
| LEFT SIDE | 1041.00 S.F. | 91.78 S.F. | 8.82 % |
| RIGHT SIDE | 1041.00 S.F. | 92.95 S.F. | 8.93 % |
| REAR | 675.00 S.F. | 135.33 S.F. | 20.05 % |
| TOTAL SQ. FT. | 3453.00 S.F. | 400.98 S.F. | 11.61 % |
| TOTAL SQ. M. | 320.79 S.M. | 37.25 S.M. | 11.61 % |

project name: GREEN VALLEY ESTATES
municipality: BRADFORD, ON.

# BAYVIEW WELLINGTON

## S42-3
RIDEAU 3

project no. 13045

FRONT ELEVATION 'A'

drawing no. 11

date 2014-04
drawn by LM
checked by –
scale 3/16" = 1'-0"
file name 13045-S42-3
RICHARD – H:\ARCHIVE\ WORKING\2013\13045.BW\units\s42\13045-S42-3.dwg – Wed – Jun 3 2015 – 10:37 AM


VA3 DESIGN
300A Wilson Avenue
Toronto, ON M3H 1S8
t 416.630.2255 f 416.630.4782
va3design.com


The undersigned has reviewed and takes responsibility for this design and has the qualifications and meets the requirements set out in the Ontario Building Code to be a Designer.

qualification information
name: Wellington Jno-Baptiste
registration information: VA3 Design Inc.
signature
BCIN 25591
BCIN 42658

Contractor must verify all dimensions on the job and report any discrepancy to the Designer before proceeding with the work. All dimensions and specifications are approximate and are the property of the Designer which must be returned at the completion of the work. Drawings are not to be scaled.

| no. | description | date | by |
|---|---|---|---|
| 9 | . | . | . |
| 8 | . | . | . |
| 7 | . | . | . |
| 6 | . | . | . |
| 5 | . | . | . |
| 4 | . | . | . |
| 3 | . | . | . |
| 2 | REVISED AS PER ENG'S COMMENTS | APR 30-15 | RC |
| 1 | ISSUED FOR CLIENT REVIEW | 14-08-30 | LM |


All drawings specifications, related documents and design are the copyright property of VA3 DESIGN. Reproduction of this property in whole or in part is strictly prohibited without VA3 DESIGN's written permission.

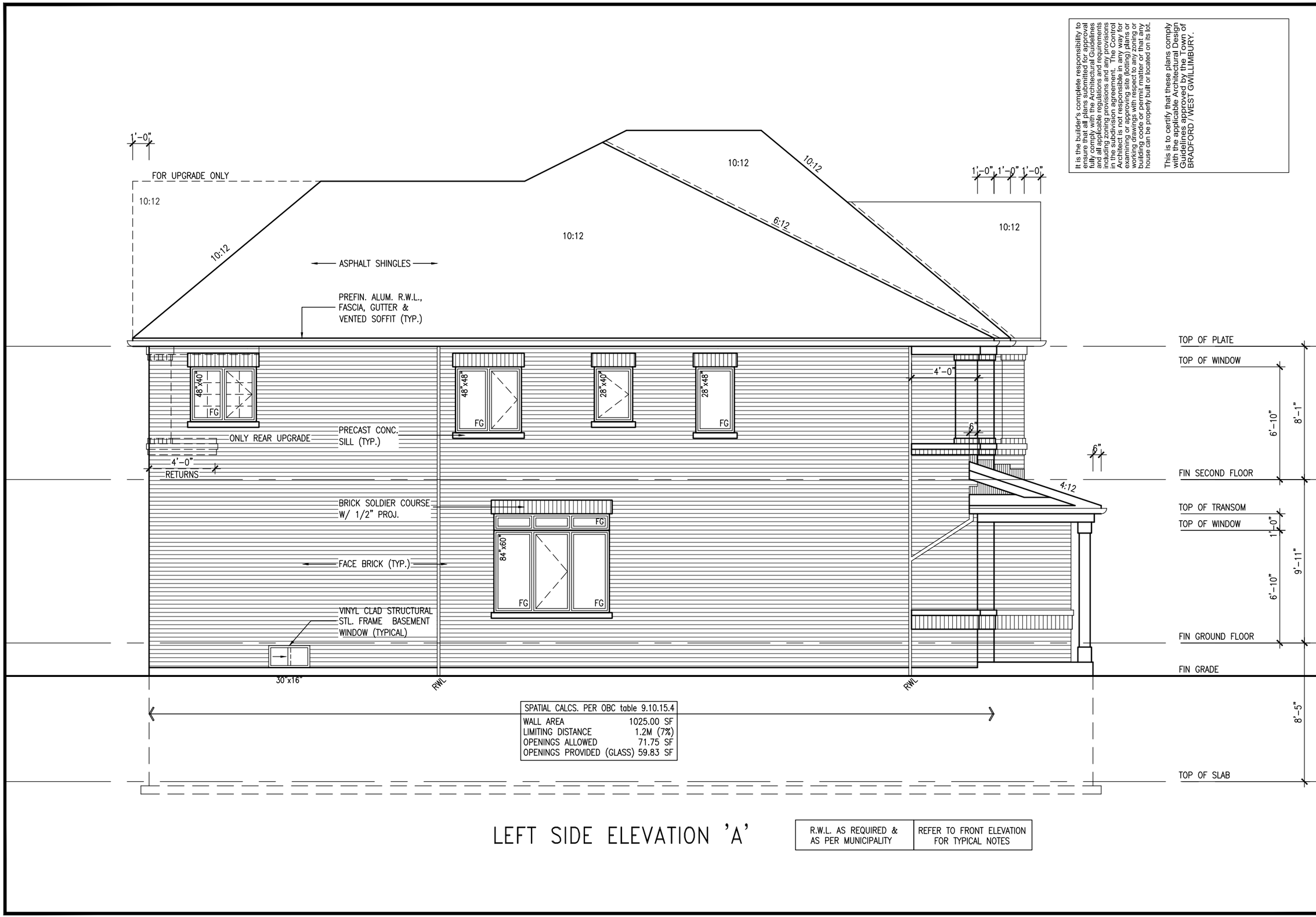


| SPATIAL CALCS. PER OBC table 9.10.15.4 | |
|---|---|
| WALL AREA | 1025.00 SF |
| LIMITING DISTANCE | 1.2M (7%) |
| OPENINGS ALLOWED | 71.75 SF |
| OPENINGS PROVIDED (GLASS) | 59.83 SF |

# LEFT SIDE ELEVATION 'A'

| R.W.L. AS REQUIRED & AS PER MUNICIPALITY | REFER TO FRONT ELEVATION FOR TYPICAL NOTES |
|---|---|

It is the builder's complete responsibility to ensure that all plans submitted for approval fully comply with the Architectural Guidelines and all applicable regulations and requirements including zoning provisions and any provisions in the subdivision agreement. The Control Architect is not responsible in any way for examining or approving site (lotting) plans or working drawings with respect to any zoning or building code or permit matter or that any house can be properly built or located on its lot.

This is to certify that these plans comply with the applicable Architectural Design Guidelines approved by the Town of BRADFORD / WEST GWILLIMBURY.

**BAYVIEW WELLINGTON**

project name: GREEN VALLEY ESTATES

municipality: BRADFORD, ON.

**S42-3**
RIDEAU 3

project no. 13045

LEFT SIDE ELEVATION 'A'

drawing no. 12

| date | checked by | scale | file name |
|---|---|---|---|
| 2014-04 | - | 3/16" = 1'-0" | 13045-S42-3 |

| drawn by | |
|---|---|
| LM | RICHARD - H:\ARCHIVE\WORKING\2013\13045.BW\units\s42\13045-S42-3.dwg - Wed - Jun 3 2015 - 10:37 AM |


VA3 DESIGN
300A Wilson Avenue
Toronto ON M3H 1S8
t 416.630.2255 f 416.630.4782
va3design.com


The undersigned has reviewed and takes responsibility for this design and has the qualifications and meets the requirements set out in the Ontario Building Code to be a Designer.

qualification information

| name | registration information | signature | BCIN |
|---|---|---|---|
| Wellington Jno-Baptiste | 25591 | | |
| VA3 Design Inc. | 42658 | | |

Contractor must verify all dimensions on the job and report any discrepancy to the Designer before proceeding with the work. All drawings, specifications and designs are instruments of service and the property of the Designer which must be returned at the completion of the work. Drawings are not to be scaled.

| no. | description | date | by |
|---|---|---|---|
| 9 | . | . | . |
| 8 | . | . | . |
| 7 | . | . | . |
| 6 | . | . | . |
| 5 | . | . | . |
| 4 | . | . | . |
| 3 | . | . | . |
| 2 | REVISED AS PER ENG'S COMMENTS | APR 30-15 | RC |
| 1 | ISSUED FOR CLIENT REVIEW | 14-08-30 | LM |

All drawings specifications, related documents and design are the copyright property of VA3 DESIGN. Reproduction of this property in whole or in part is strictly prohibited without VA3 DESIGN's written permission.

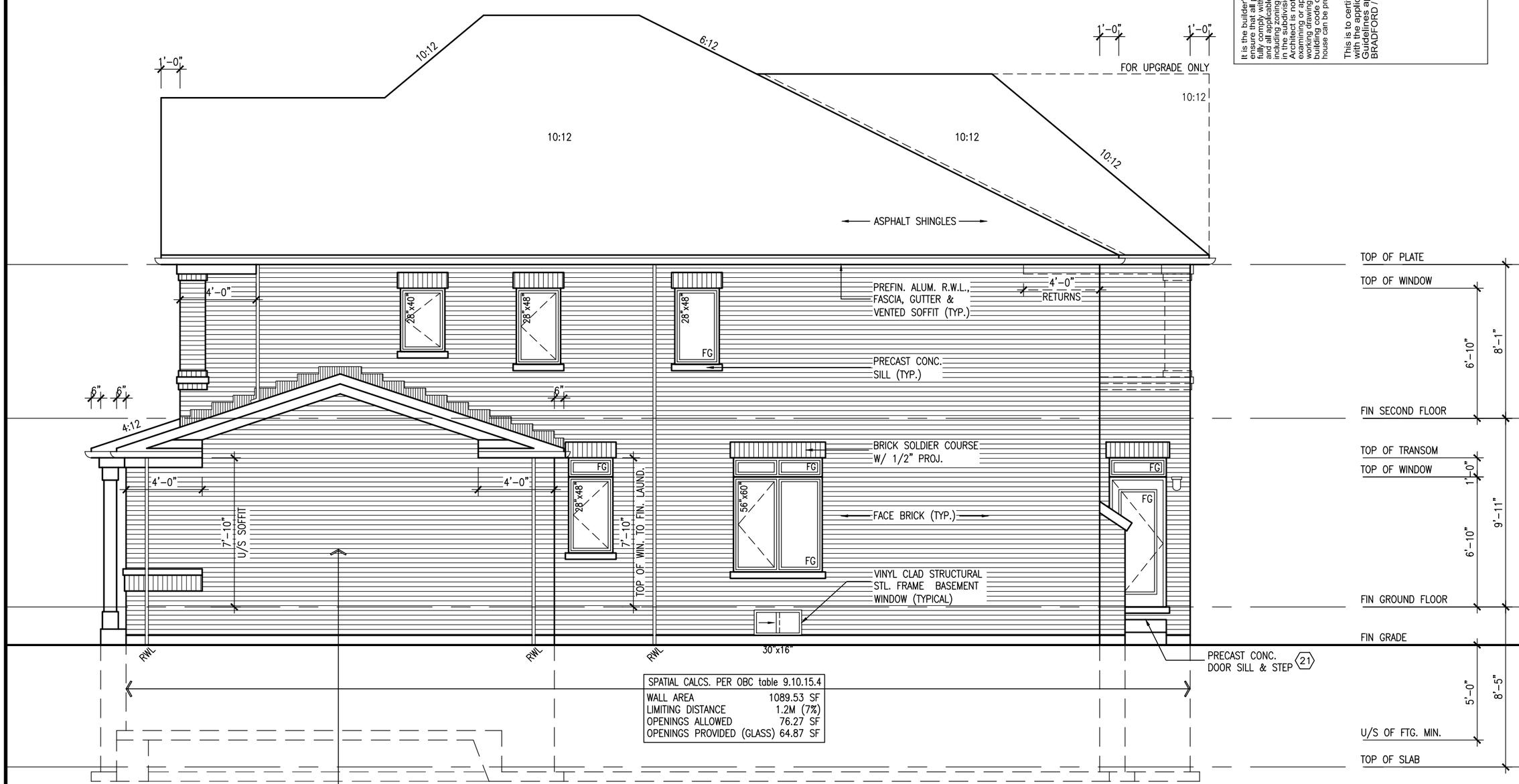


| SPATIAL CALCS. PER OBC table 9.10.15.4 | |
|---|---|
| WALL AREA | 1089.53 SF |
| LIMITING DISTANCE | 1.2M (7%) |
| OPENINGS ALLOWED | 76.27 SF |
| OPENINGS PROVIDED (GLASS) | 64.87 SF |

It is the builder's complete responsibility to ensure that all plans submitted for approval fully comply with the Architectural Guidelines and all applicable regulations and requirements including zoning provisions and any provisions in the subdivision agreement. The Control Architect is not responsible in any way for examining or approving site (lotting) plans or working drawings with respect to any zoning or building code or permit matter or that any house can be properly built or located on its lot.

This is to certify that these plans comply with the applicable Architectural Design Guidelines approved by the Town of BRADFORD / WEST GWILLIMBURY.

## BRICK VENEER CONSTRUCTION

(FOR WALLS LESS THAN 1.2M (3'-11") FROM THE LOT LINE)

45 MINUTE FIRE RATED WALL

PROVIDE A CONTINUOUS LAYER OF 12.7mm (1/2") TYPE 'X' GYPSUM BOARD (INTERIOR SIDE) INSTALLED SO THAT ALL EDGES ARE SUPPORTED, TAPED AND FILLED. SPACE BETWEEN WOOD STUDS TO BE FILLED WITH PREFORMED MINERAL FIBRE INSULATION WITH A MASS OF NOT LESS THAN 1.22 Kg/SQ.M. AND MUST FILL AT LEAST 90% OF THE CAVITY THICKNESS. THE TYPE 'X' & INSULATION MUST BE RUN CONTINUOUSLY BEHIND ALL INTERSECTING PARTITIONS, MECHANICAL CHASES, BATHTUBS, SHOWERS, ETC. ENSURE INSULATION & TYPE 'X' IS INSTALLED IN GARAGE EXTERIOR WALLS.
(REFER TO SECTION 2.3 OF SUPPLEMENTARY STANDARDS)

# RIGHT SIDE ELEVATION 'A'

| R.W.L. AS REQUIRED & AS PER MUNICIPALITY | REFER TO FRONT ELEVATION FOR TYPICAL NOTES |
|---|---|

**S42-3**
RIDEAU 3

project no. 13045

**BAYVIEW WELLINGTON**

municipality: BRADFORD, ON.

project name: GREEN VALLEY ESTATES

RIGHT SIDE ELEVATION 'A'

| date | checked by | scale | file name | drawing no. |
|---|---|---|---|---|
| 2014-04 | - | 3/16" = 1'-0" | 13045-S42-3 | 13 |

drawn by: LM

RICHARD - H:\ARCHIVE\WORKING\2013\13045.BW\units\s42\13045-S42-3.dwg - Wed - Jun 3 2015 - 10:37 AM


VA3 DESIGN
300A Wilson Avenue
Toronto, ON M3H 1S8
t 416.630.2255 f 416.630.4782
va3design.com


The undersigned has reviewed and takes responsibility for this design and has the qualifications and meets the requirements set out in the Ontario Building Code to be a Designer.

qualification information

| name | registration information |
|---|---|
| Wellington Jno-Baptiste | 25591 BCIN |
| VA3 Design Inc. | 42658 |

signature

Contractor must verify all dimensions on the job and report any discrepancy to the Designer before proceeding with the work. All drawings and specifications are instruments of service and the property of the Designer which must be returned at the completion of the work. Drawings are not to be scaled.

| no. | description | date | by |
|---|---|---|---|
| 9 | . | . | . |
| 8 | . | . | . |
| 7 | . | . | . |
| 6 | . | . | . |
| 5 | . | . | . |
| 4 | . | . | . |
| 3 | . | . | . |
| 2 | REVISED AS PER ENG'S COMMENTS | APR. 30-15 | RC |
| 1 | ISSUED FOR CLIENT REVIEW | 14-08-30 | LM |


All drawings specifications, related documents and design are the copyright property of VA3 DESIGN. Reproduction of this property in whole or in part is strictly prohibited without VA3 DESIGN's written permission.

# REAR ELEVATION 'A', 'B' & 'C'

It is the builder's complete responsibility to ensure that all plans submitted for approval fully comply with the Architectural Guidelines and all applicable regulations and requirements including zoning provisions and any provisions in the subdivision agreement. The Control Architect is not responsible in any way for examining or approving site (lotting) plans or working drawings with respect to any zoning or building code or permit matter or that any house can be properly built or located on its lot.

This is to certify that these plans comply with the applicable Architectural Design Guidelines approved by the Town of BRADFORD / WEST GWILLIMBURY.

project no. 13045

**S42-3**
RIDEAU 3

drawing no. **14**

**BAYVIEW WELLINGTON**

project name: GREEN VALLEY ESTATES
municipality: BRADFORD, ON.
REAR ELEVATION

date: 2014-04
drawn by: LM
checked by: -
scale: 3/16" = 1'-0"
file name: 13045-S42-3

RICHARD — H:\ARCHIVE\WORKING\2013\13045.BW\units\42'\13045-S42-3.dwg — Wed — Jun 3 2015 — 10:37 AM

**VA3 DESIGN**
300A Wilson Avenue
Toronto ON M3H 1S8
t 416.630.2255 f 416.630.4782
va3design.com

The undersigned has reviewed and takes responsibility for this design and has the qualifications and meets the requirements set out in the Ontario Building Code to be a Designer.

qualification information
Wellington Jno-Baptiste — signature — 25591
name — BCIN
registration information
VA3 Design Inc. — 42658

Contractor must verify all dimensions on the job and report any discrepancy to the Designer before proceeding with the work. All drawings and specifications are instruments of service and the property of the Designer which must be returned at the completion of the work. Drawings are not to be scaled.

| no. | description | date | by |
|---|---|---|---|
| 9 | | | |
| 8 | | | |
| 7 | | | |
| 6 | | | |
| 5 | | | |
| 4 | | | |
| 3 | | | |
| 2 | REVISED AS PER ENG'S COMMENTS | APR 30-15 | RC |
| 1 | ISSUED FOR CLIENT REVIEW | 14-08-30 | LM |

All drawings specifications, related documents and design are the copyright property of VA3 DESIGN. Reproduction of this property in whole or in part is strictly prohibited without VA3 DESIGN's written permission.

REAR ELEVATION 'A', 'B' & 'C' W/ OPT. LOGGIA

It is the builder's complete responsibility to ensure that all plans submitted for approval fully comply with the Architectural Guidelines and all applicable regulations and requirements including zoning provisions and any provisions in the subdivision agreement. The Control Architect is not responsible in any way for examining or approving site (lotting) plans or working drawings with respect to any zoning or building code or permit matter or that any house can be properly built or located on its lot.

This is to certify that these plans comply with the applicable Architectural Design Guidelines approved by the Town of BRADFORD / WEST GWILLIMBURY.

| no. | description | date | by |
|---|---|---|---|
| 9 | | | |
| 8 | | | |
| 7 | | | |
| 6 | | | |
| 5 | | | |
| 4 | | | |
| 3 | | | |
| 2 | REVISED AS PER ENG'S COMMENTS | APR 30-15 | RC |
| 1 | ISSUED FOR CLIENT REVIEW | 14-08-30 | LM |

The undersigned has reviewed and takes responsibility for this design and has the qualifications and meets the requirements set out in the Ontario Building Code to be a Designer.

qualification information
Wellington Jno-Baptiste (signature) 25591
name signature BCIN
registration information
VA3 Design Inc. 42658

Contractor must verify all dimensions on the job and report any discrepancy to the Designer before proceeding with the work. All drawings and specifications are instruments of service and the property of the Designer which must be returned at the completion of the work. Drawings are not to be scaled.

VA3 DESIGN
300A Wilson Avenue
Toronto ON M3H 1S8
t 416.630.2255 f 416.630.4782
va3design.com

project name: BAYVIEW WELLINGTON
GREEN VALLEY ESTATES
municipality: BRADFORD, ON.
S42-3
RIDEAU 3
project no. 13045
date: 2014-04
drawn by: LM
checked by: -
scale: 3/16" = 1'-0"
REAR ELEVATION W/ OPT. LOGGIA
file name: 13045-S42-3
drawing no. 15

RICHARD — H:\ARCHIVE\WORKING\2013\13045.BW\units\42'\13045-S42-3.dwg — Wed — Jun 3 2015 — 10:37 AM

All drawings specifications, related documents and design are the copyright property of VA3 DESIGN. Reproduction of this property in whole or in part is strictly prohibited without VA3 DESIGN's written permission.

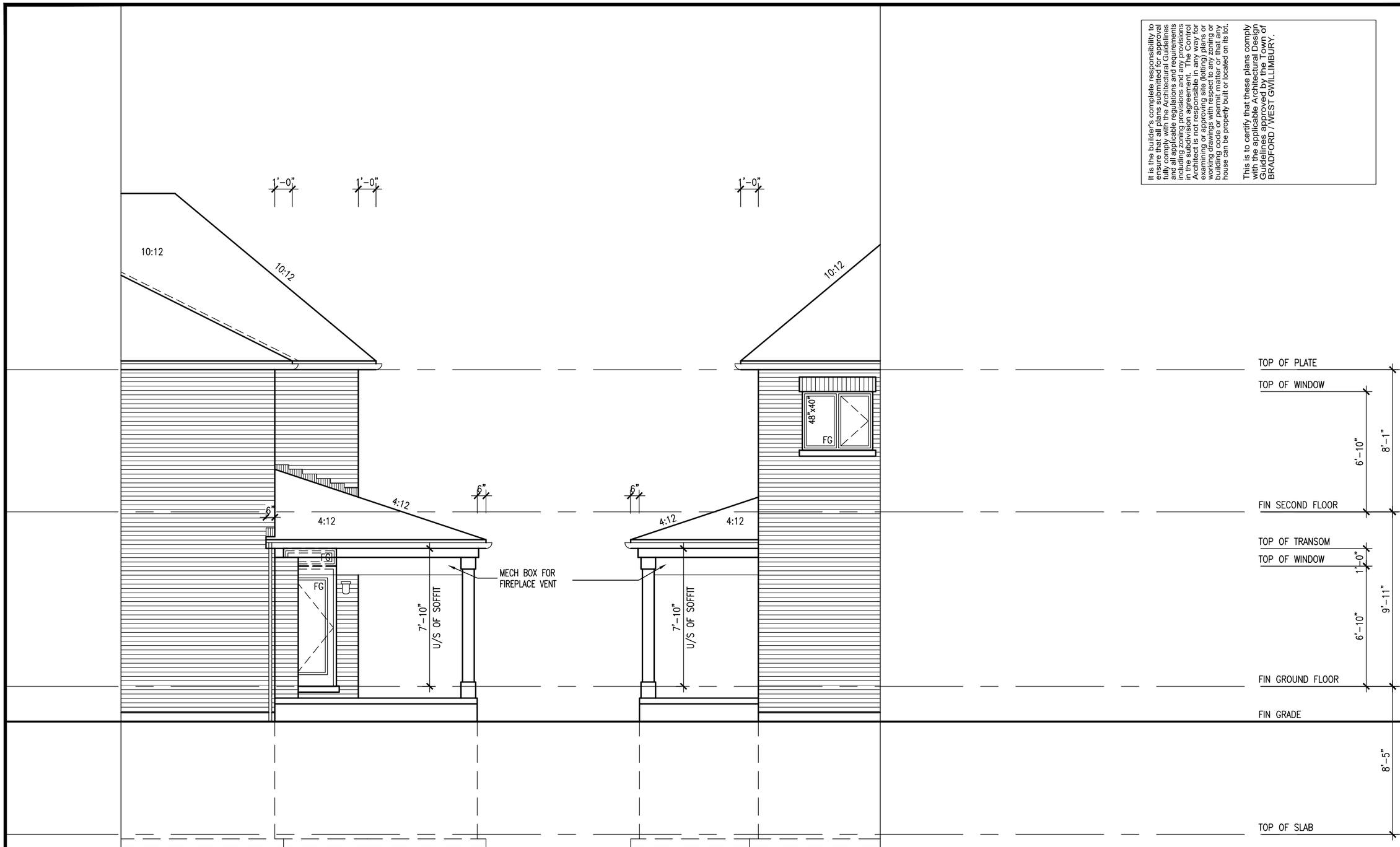


PARTIAL RIGHT SIDE ELEVATION
'A' W/ OPT. LOGGIA ELEVATION
'B & C' SIMILAR

PARTIAL LEFT SIDE ELEVATION
'A' W/ OPT. LOGGIA ELEVATION
'B & C' SIMILAR

It is the builder's complete responsibility to ensure that all plans submitted for approval fully comply with the Architectural Guidelines and all applicable regulations and requirements including zoning provisions and any provisions in the subdivision agreement. The Control Architect is not responsible in any way for examining or approving site (lotting) plans or working drawings with respect to any zoning or building code or permit matter or that any house can be properly built or located on its lot.

This is to certify that these plans comply with the applicable Architectural Design Guidelines approved by the Town of BRADFORD / WEST GWILLIMBURY.

# BAYVIEW WELLINGTON

## S42-3
RIDEAU 3

project name: GREEN VALLEY ESTATES
municipality: BRADFORD, ON.
project no. 13045

REAR ELEVATION W/ OPT. LOGGIA

date: 2014-04
drawn by: LM
checked by: -
scale: 3/16" = 1'-0"
file name: 13045-S42-3
drawing no. 16

RICHARD - H:\ARCHIVE\WORKING\2013\13045.BW\units\s42\13045-S42-3.dwg - Wed - Jun 3 2015 - 10:37 AM


VA3 DESIGN
300A Wilson Avenue
Toronto, ON M3H 1S8
t 416.630.2255 f 416.630.4782
va3design.com


The undersigned has reviewed and takes responsibility for this design and has the qualifications and meets the requirements set out in the Ontario Building Code to be a Designer.

qualification information
name: Wellington Jno-Baptiste
registration information: VA3 Design Inc.
signature
25591
BCIN 42658

Contractor must verify all dimensions on the job and report any discrepancy to the Designer before proceeding with the work. All dimensions and specifications are intended as a service and the property of the Designer which must be returned at the completion of the work. Drawings are not to be scaled.

| no. | description | date | by |
|---|---|---|---|
| 9 | . | . | . |
| 8 | . | . | . |
| 7 | . | . | . |
| 6 | . | . | . |
| 5 | . | . | . |
| 4 | . | . | . |
| 3 | . | . | . |
| 2 | REVISED AS PER ENG'S COMMENTS | APR 30-15 | RC |
| 1 | ISSUED FOR CLIENT REVIEW | 14-08-30 | LM |

All drawings specifications, related documents and design are the copyright property of VA3 DESIGN. Reproduction of this property in whole or in part is strictly prohibited without VA3 DESIGN's written permission.

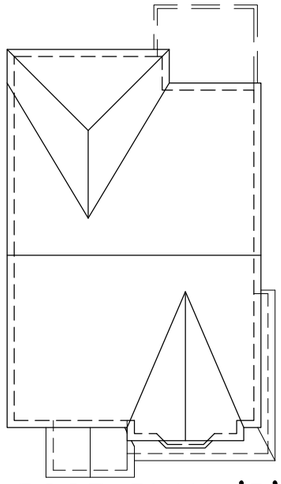

ROOF PLAN 'B'

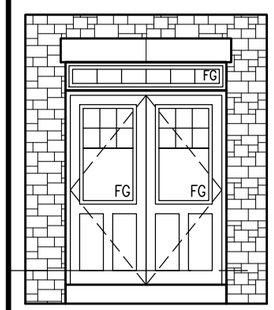


PORTICO INTERIOR

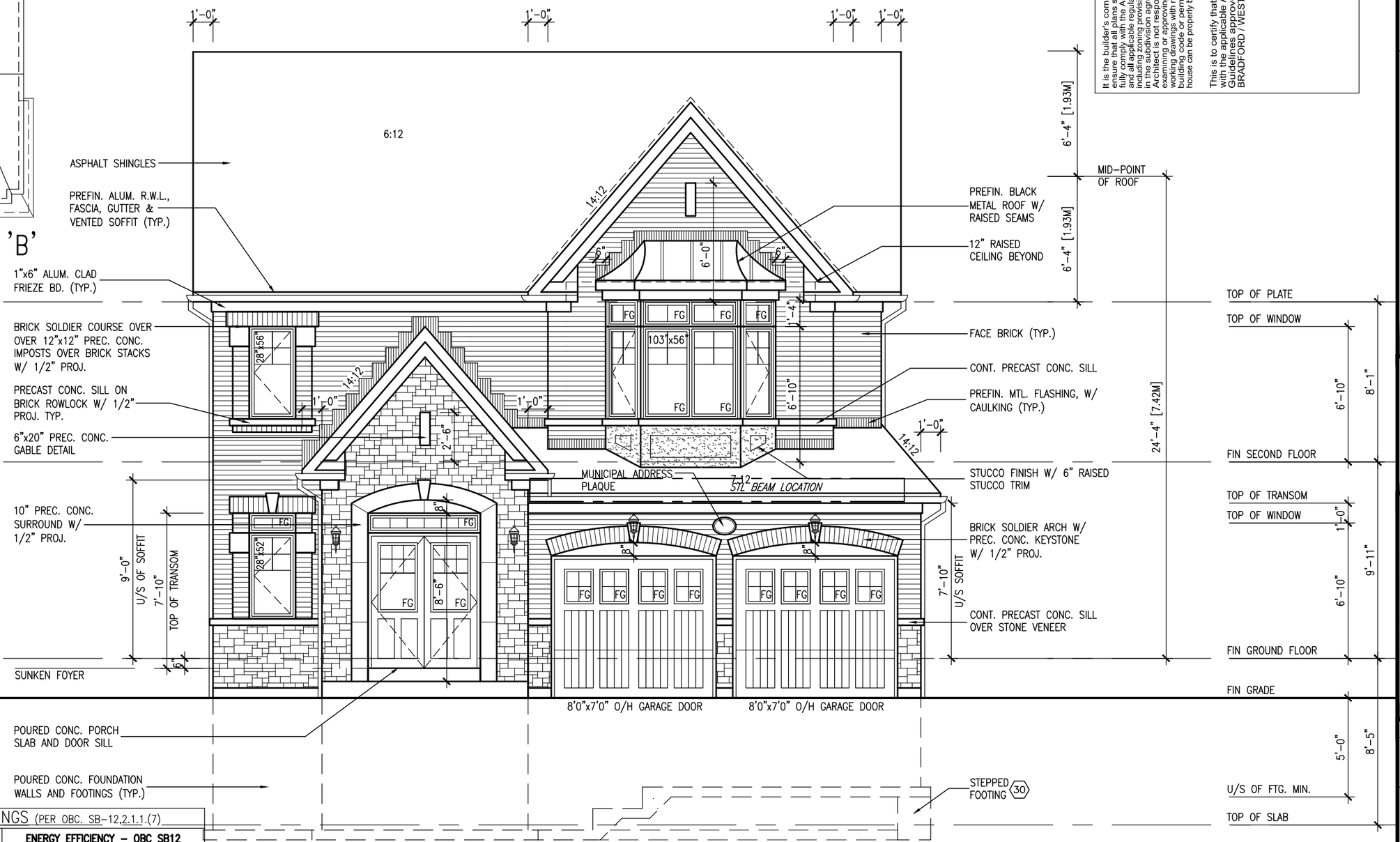


FRONT ELEVATION 'B'

It is the builder's complete responsibility to ensure that all plans submitted for approval fully comply with the Architectural Guidelines and all applicable regulations and requirements including zoning provisions and any provisions in the subdivision agreement. The Control Architect is not responsible in any way for examining or approving site (lotting) plans or working drawings with respect to any zoning or building code or permit matter or that any house can be properly built or located on its lot.

This is to certify that these plans comply with the applicable Architectural Design Guidelines approved by the Town of BRADFORD / WEST GWILLIMBURY.

UNINSULATED OPENINGS (PER OBC. SB-12,2.1.1.(7)

| S42-3 ELEVATION B | ENERGY EFFICIENCY – OBC SB12 | | |
|---|---|---|---|
| ELEVATION | WALL AREA S.F. | OPENING S.F. | PERCENTAGE |
| FRONT | 688.00 S.F. | 80.50 S.F. | 11.70 % |
| LEFT SIDE | 1041.00 S.F. | 102.67 S.F. | 9.86 % |
| RIGHT SIDE | 1041.00 S.F. | 92.94 S.F. | 8.93 % |
| REAR | 675.00 S.F. | 135.33 S.F. | 20.05 % |
| TOTAL SQ. FT. | 3445.00 S.F. | 411.44 S.F. | 11.94 % |
| TOTAL SQ. M. | 320.05 S.M. | 38.22 S.M. | 11.94 % |

# S42-3
RIDEAU 3

project no. 13045

# BAYVIEW WELLINGTON

municipality: BRADFORD, ON.

project name: GREEN VALLEY ESTATES

FRONT ELEVATION 'B'

drawing no. 17

date: 2014-04
drawn by: LM
checked by: –
scale: 3/16" = 1'-0"
file name: 13045-S42-3

RICHARD – H:\ARCHIVE\WORKING\2013\13045.BW\units\s42\13045-S42-3.dwg – Wed – Jun 3 2015 – 10:37 AM


VA3 DESIGN
300A Wilson Avenue
Toronto, ON M3H 1S8
t 416.630.2255 f 416.630.4782
va3design.com


The undersigned has reviewed and takes responsibility for this design and has the qualifications and meets the requirements set out in the Ontario Building Code to be a Designer.

qualification information

Wellington Jno-Baptiste — signature

name: Wellington Jno-Baptiste — BCIN 25591

registration information: VA3 Design Inc. — 42658

Contractor must verify all dimensions on the job and report any discrepancy to the Designer before proceeding with the work. All drawings and specifications, related documents and design are the property of the Designer which must be returned at the completion of the work. Drawings are not to be scaled.

| no. | description | date | by |
|---|---|---|---|
| 9 | . | . | . |
| 8 | . | . | . |
| 7 | . | . | . |
| 6 | . | . | . |
| 5 | . | . | . |
| 4 | . | . | . |
| 3 | . | . | . |
| 2 | REVISED AS PER ENG'S COMMENTS | APR 30-15 | RC |
| 1 | ISSUED FOR CLIENT REVIEW | 14-08-30 | LM |


All drawings specifications, related documents and design are the copyright property of VA3 DESIGN. Reproduction of this property in whole or in part is strictly prohibited without VA3 DESIGN's written permission.

| SPATIAL CALCS. PER OBC table 9.10.15.4 | |
|---|---|
| WALL AREA | 1025.00 SF |
| LIMITING DISTANCE | 1.2M (7%) |
| OPENINGS ALLOWED | 71.75 SF |
| OPENINGS PROVIDED (GLASS) | 67.47 SF |

# LEFT SIDE ELEVATION 'B'

| R.W.L. AS REQUIRED & AS PER MUNICIPALITY | REFER TO FRONT ELEVATION FOR TYPICAL NOTES |
|---|---|

It is the builder's complete responsibility to ensure that all plans submitted for approval fully comply with the Architectural Guidelines and all applicable regulations and requirements including zoning provisions and any provisions in the subdivision agreement. The Control Architect is not responsible in any way for examining or approving site (lotting) plans or working drawings with respect to any zoning or building code or permit matter or that any house can be properly built or located on its lot.

This is to certify that these plans comply with the applicable Architectural Design Guidelines approved by the Town of BRADFORD / WEST GWILLIMBURY.

**BAYVIEW WELLINGTON**

project name: GREEN VALLEY ESTATES

municipality: BRADFORD, ON.

**S42-3**
RIDEAU 3

project no. 13045

LEFT SIDE ELEVATION 'B'

drawing no. 18

| date | checked by | scale | file name |
|---|---|---|---|
| 2014-04 | - | 3/16" = 1'-0" | 13045-S42-3 |

drawn by: LM

RICHARD - H:\ARCHIVE\WORKING\2013\13045.BW\units\s42\13045-S42-3.dwg - Wed - Jun 3 2015 - 10:37 AM


VA3 DESIGN
300A Wilson Avenue
Toronto ON M3H 1S8
t 416.630.2255 f 416.630.4782
va3design.com


The undersigned has reviewed and takes responsibility for this design and has the qualifications and meets the requirements set out in the Ontario Building Code to be a Designer.

qualification information

name: Wellington Jno-Baptiste
registration information: VA3 Design Inc.
signature
BCIN 25591
BCIN 42658

Contractor must verify all dimensions on the job and report any discrepancy to the Designer before proceeding with the work. All drawings and specifications are instruments of service and the property of the Designer which must be returned at the completion of the work. Drawings are not to be scaled.

| no. | description | date | by |
|---|---|---|---|
| 9 | . | . | . |
| 8 | . | . | . |
| 7 | . | . | . |
| 6 | . | . | . |
| 5 | . | . | . |
| 4 | . | . | . |
| 3 | . | . | . |
| 2 | REVISED AS PER ENG'S COMMENTS | APR 30-15 | RC |
| 1 | ISSUED FOR CLIENT REVIEW | 14-08-30 | LM |


All drawings specifications, related documents and design are the copyright property of VA3 DESIGN. Reproduction of this property in whole or in part is strictly prohibited without VA3 DESIGN's written permission.

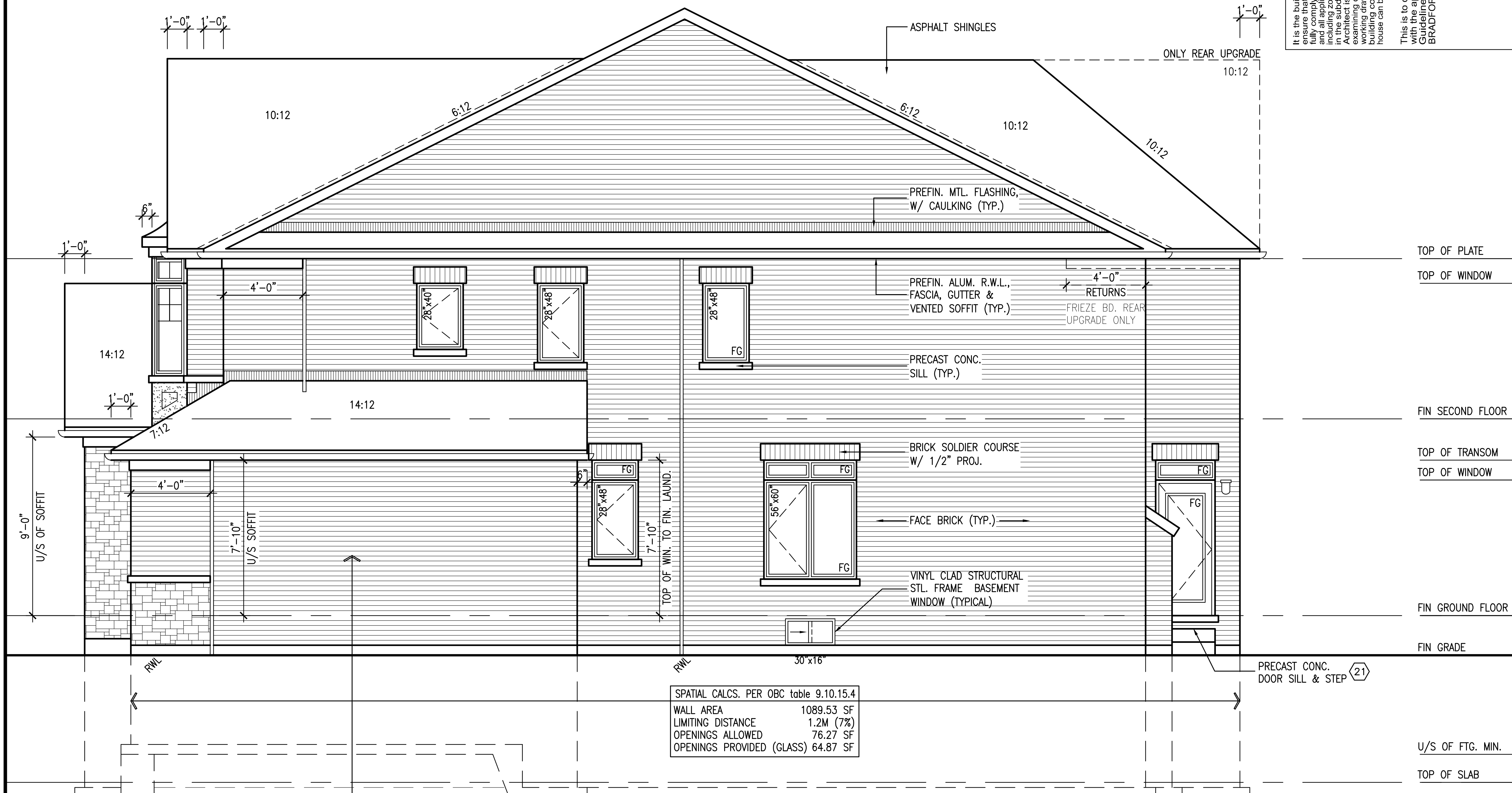


| SPATIAL CALCS. PER OBC table 9.10.15.4 | |
|---|---|
| WALL AREA | 1089.53 SF |
| LIMITING DISTANCE | 1.2M (7%) |
| OPENINGS ALLOWED | 76.27 SF |
| OPENINGS PROVIDED (GLASS) | 64.87 SF |

# RIGHT SIDE ELEVATION 'B'

| R.W.L. AS REQUIRED & AS PER MUNICIPALITY | REFER TO FRONT ELEVATION FOR TYPICAL NOTES |
|---|---|

## BRICK VENEER CONSTRUCTION

(FOR WALLS LESS THAN 1.2M (3'-11") FROM THE LOT LINE)
45 MINUTE FIRE RATED WALL
PROVIDE A CONTINUOUS LAYER OF 12.7mm (1/2") TYPE 'X' GYPSUM BOARD (INTERIOR SIDE) INSTALLED SO THAT ALL EDGES ARE SUPPORTED, TAPED AND FILLED. SPACE BETWEEN WOOD STUDS TO BE FILLED WITH PREFORMED MINERAL FIBRE INSULATION WITH A MASS OF NOT LESS THAN 1.22 Kg/SQ.M. AND MUST FILL AT LEAST 90% OF THE CAVITY THICKNESS. THE TYPE 'X' & INSULATION MUST BE RUN CONTINUOUSLY BEHIND ALL INTERSECTING PARTITIONS, MECHANICAL CHASES, BATHTUBS, SHOWERS, ETC. ENSURE INSULATION & TYPE 'X' IS INSTALLED IN GARAGE EXTERIOR WALLS.
(REFER TO SECTION 2.3 OF SUPPLEMENTARY STANDARDS)

It is the builder's complete responsibility to ensure that all plans submitted for approval fully comply with the Architectural Guidelines and all applicable regulations and requirements including zoning provisions and any provisions in the subdivision agreement. The Control Architect is not responsible in any way for examining or approving site (lotting) plans or working drawings with respect to any zoning or building code or permit matter or that any house can be properly built or located on its lot.

This is to certify that these plans comply with the applicable Architectural Design Guidelines approved by the Town of BRADFORD / WEST GWILLIMBURY.

S42-3
RIDEAU 3
project no. 13045

BAYVIEW WELLINGTON

project name GREEN VALLEY ESTATES
municipality BRADFORD, ON.
RIGHT SIDE ELEVATION 'B'
drawing no. 19
date 2014-04
drawn by LM
checked by -
scale 3/16" = 1'-0"
file name 13045-S42-3

RICHARD – H:\ARCHIVE\WORKING\2013\13045.BW\units\42'\13045-S42-3.dwg – Wed – Jun 3 2015 – 10:37 AM

VA3 DESIGN
300A Wilson Avenue
Toronto ON M3H 1S8
t 416.630.2255 f 416.630.4782
va3design.com

The undersigned has reviewed and takes responsibility for this design and has the qualifications and meets the requirements set out in the Ontario Building Code to be a Designer.
qualification information
Wellington Jno-Baptiste 25591
name signature BCIN
registration information
VA3 Design Inc. 42658

Contractor must verify all dimensions on the job and report any discrepancy to the Designer before proceeding with the work. All drawings and specifications are instruments of service and the property of the Designer which must be returned at the completion of the work. Drawings are not to be scaled.

| no. | description | date | by |
|---|---|---|---|
| 1 | ISSUED FOR CLIENT REVIEW | 14-08-30 | LM |
| 2 | REVISED AS PER ENG'S COMMENTS | APR 30-15 | RC |
| 3 | | | |
| 4 | | | |
| 5 | | | |
| 6 | | | |
| 7 | | | |
| 8 | | | |
| 9 | | | |

All drawings specifications, related documents and design are the copyright property of VA3 DESIGN. Reproduction of this property in whole or in part is strictly prohibited without VA3 DESIGN's written permission.

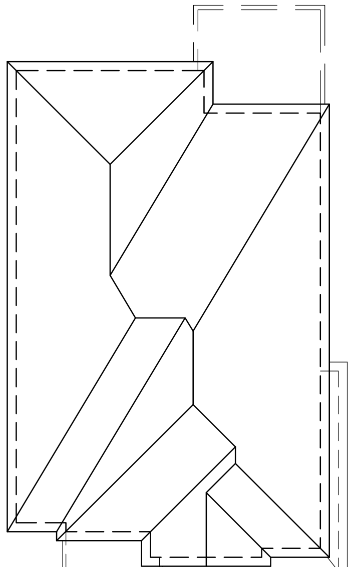

ROOF PLAN 'C'

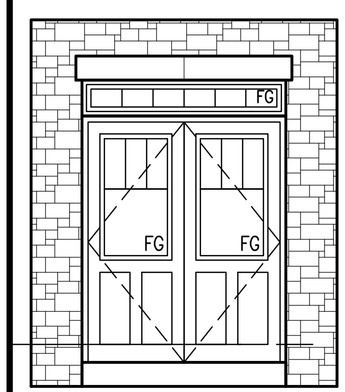

PORTICO INTERIOR

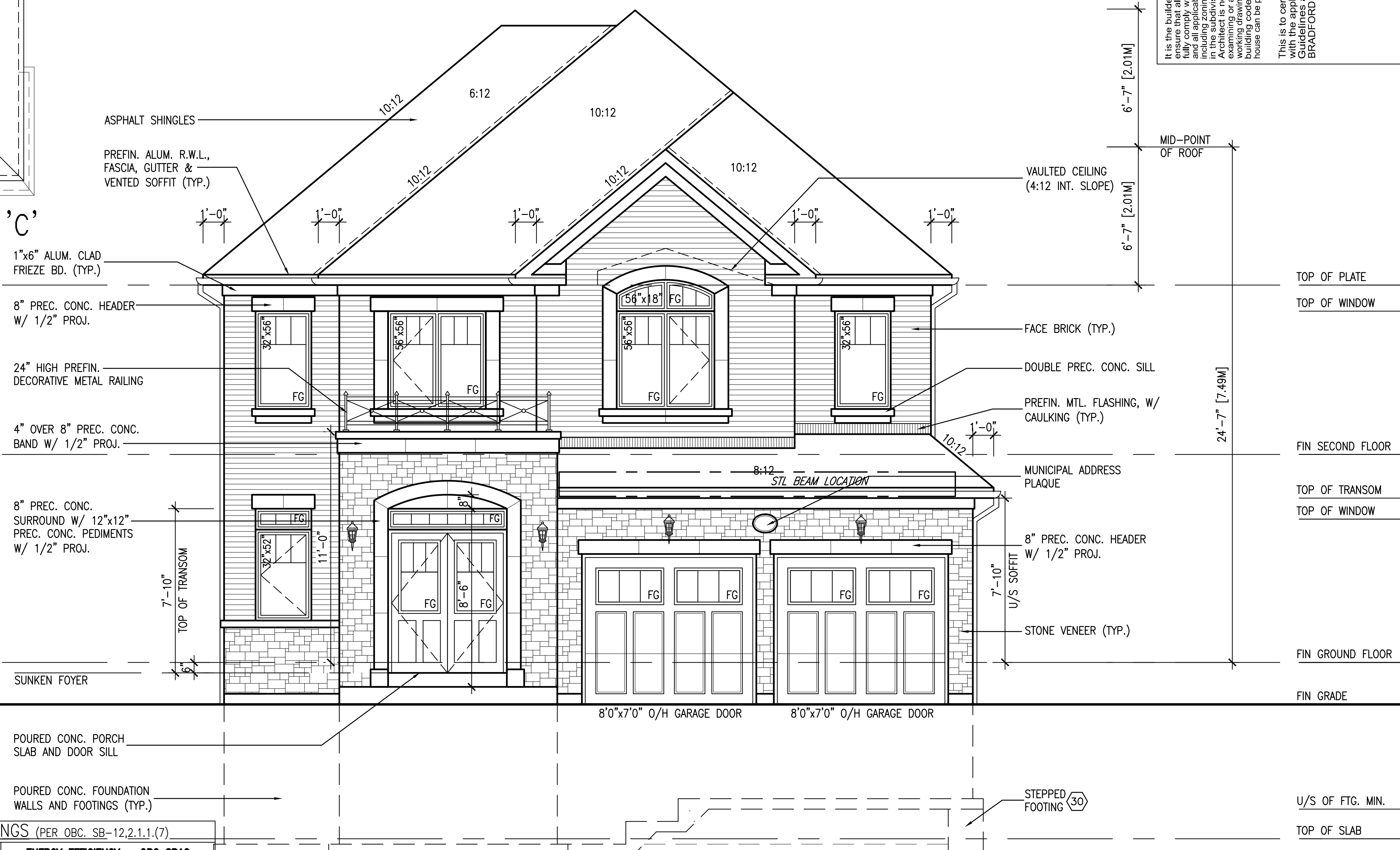


FRONT ELEVATION 'C'

UNINSULATED OPENINGS (PER OBC. SB-12.2.1.1.(7)

| S42-3 ELEVATION C | ENERGY EFFICIENCY – OBC SB12 | | |
|---|---|---|---|
| ELEVATION | WALL AREA S.F. | OPENING S.F. | PERCENTAGE |
| FRONT | 684.00 S.F. | 94.33 S.F. | 13.79 % |
| LEFT SIDE | 1050.00 S.F. | 91.78 S.F. | 8.74 % |
| RIGHT SIDE | 1050.00 S.F. | 95.94 S.F. | 9.14 % |
| REAR | 675.00 S.F. | 135.33 S.F. | 20.05 % |
| TOTAL SQ. FT. | 3459.00 S.F. | 417.38 S.F. | 12.07 % |
| TOTAL SQ. M. | 321.35 S.M. | 38.78 S.M. | 12.07 % |

It is the builder's complete responsibility to ensure that all plans submitted for approval fully comply with the Architectural Guidelines and all applicable regulations and requirements including zoning provisions and any provisions in the subdivision agreement. The Control Architect is not responsible in any way for examining or approving site (lotting) plans or working drawings with respect to any zoning or building code or permit matter or that any house can be properly built or located on its lot.

This is to certify that these plans comply with the applicable Architectural Design Guidelines approved by the Town of BRADFORD / WEST GWILLIMBURY.

| no. | description | date | by |
|---|---|---|---|
| 9 | . | . | . |
| 8 | . | . | . |
| 7 | . | . | . |
| 6 | . | . | . |
| 5 | . | . | . |
| 4 | . | . | . |
| 3 | . | . | . |
| 2 | REVISED AS PER ENG'S COMMENTS | APR 30-15 | RC |
| 1 | ISSUED FOR CLIENT REVIEW | 14-08-30 | LM |

The undersigned has reviewed and takes responsibility for this design and has the qualifications and meets the requirements set out in the Ontario Building Code to be a Designer.

qualification information

Wellington Jno-Baptiste 25591

name signature BCIN

registration information

VA3 Design Inc. 42658

Contractor must verify all dimensions on the job and report any discrepancy to the Designer before proceeding with the work. All drawings and specifications are instruments of service and the property of the Designer which must be returned at the completion of the work. Drawings are not to be scaled.

VA3 DESIGN
300A Wilson Avenue
Toronto ON M3H 1S8
t 416.630.2255 f 416.630.4782
va3design.com

# BAYVIEW WELLINGTON

project name: GREEN VALLEY ESTATES

municipality: BRADFORD, ON.

# S42-3
RIDEAU 3

project no. 13045

date: 2014-04

drawn by: LM

checked by: –

scale: 3/16" = 1'-0"

FRONT ELEVATION 'C'

file name: 13045-S42-3

drawing no. 20

RICHARD – H:\ARCHIVE\WORKING\2013\13045.BW\units\42'\13045-S42-3.dwg – Wed – Jun 3 2015 – 10:37 AM

All drawings specifications, related documents and design are the copyright property of VA3 DESIGN. Reproduction of this property in whole or in part is strictly prohibited without VA3 DESIGN's written permission.

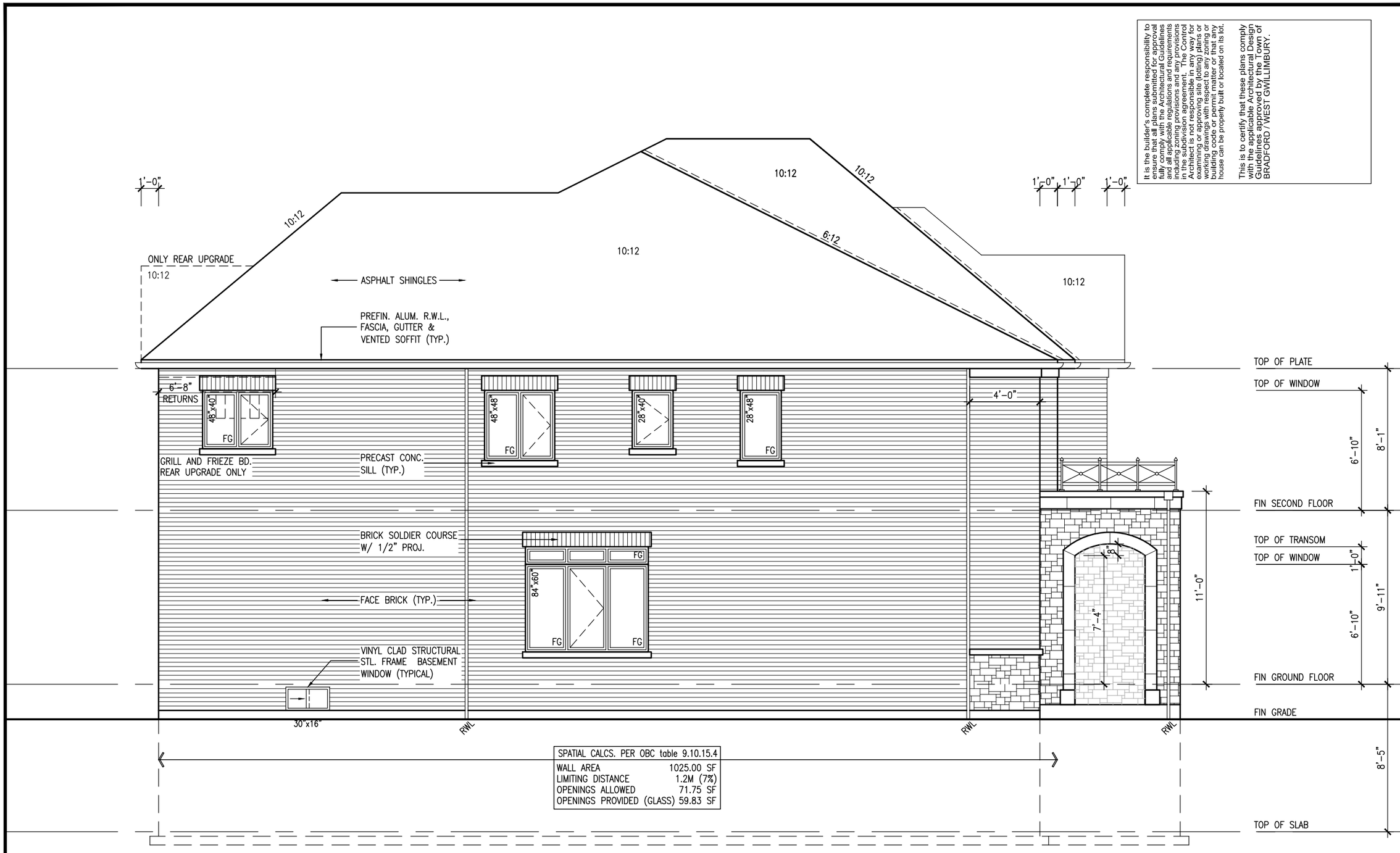


| SPATIAL CALCS. PER OBC table 9.10.15.4 | |
|---|---|
| WALL AREA | 1025.00 SF |
| LIMITING DISTANCE | 1.2M (7%) |
| OPENINGS ALLOWED | 71.75 SF |
| OPENINGS PROVIDED (GLASS) | 59.83 SF |

# LEFT SIDE ELEVATION 'C'

| R.W.L. AS REQUIRED & AS PER MUNICIPALITY | REFER TO FRONT ELEVATION FOR TYPICAL NOTES |
|---|---|

It is the builder's complete responsibility to ensure that all plans submitted for approval fully comply with the Architectural Guidelines and all applicable regulations and requirements including zoning provisions and any provisions in the subdivision agreement. The Control Architect is not responsible in any way for examining or approving site (lotting) plans or working drawings with respect to any zoning or building code or permit matter or that any house can be properly built or located on its lot.

This is to certify that these plans comply with the applicable Architectural Design Guidelines approved by the Town of BRADFORD / WEST GWILLIMBURY.

**BAYVIEW WELLINGTON**

project name: GREEN VALLEY ESTATES

municipality: BRADFORD, ON.

**S42-3**
RIDEAU 3

project no. 13045

LEFT SIDE ELEVATION 'C'

| date | checked by | scale | file name | drawing no. |
|---|---|---|---|---|
| 2014-04 | - | 3/16" = 1'-0" | 13045-S42-3 | 21 |
| drawn by | | | | |
| LM | | | | |

RICHARD - H:\ARCHIVE\WORKING\2013\13045.BW\units\42\13045-S42-3.dwg - Wed - Jun 3 2015 - 10:37 AM


VA3 DESIGN
300A Wilson Avenue
Toronto ON M3H 1S8
t 416.630.2255 f 416.630.4782
va3design.com


The undersigned has reviewed and takes responsibility for this design and has the qualifications and meets the requirements set out in the Ontario Building Code to be a Designer.

qualification information

| name | registration information |
|---|---|
| Wellington Jno-Baptiste | 25591 BCIN |
| VA3 Design Inc. | 42658 |

signature

Contractor must verify all dimensions on the job and report any discrepancy to the Designer before proceeding with the work. All dimensions and specifications are estimated unless and the property of the Designer which must be returned at the completion of the work. Drawings are not to be scaled.

| no. | description | date | by |
|---|---|---|---|
| 9 | . | . | . |
| 8 | . | . | . |
| 7 | . | . | . |
| 6 | . | . | . |
| 5 | . | . | . |
| 4 | . | . | . |
| 3 | . | . | . |
| 2 | REVISED AS PER ENG'S COMMENTS | APR. 30-15 | RC |
| 1 | ISSUED FOR CLIENT REVIEW | 14-08-30 | LM |


All drawings specifications, related documents and design are the copyright property of VA3 DESIGN. Reproduction of this property in whole or in part is strictly prohibited without VA3 DESIGN's written permission.

It is the builder's complete responsibility to ensure that all plans submitted for approval fully comply with the Architectural Guidelines and all applicable regulations and requirements including zoning provisions and any provisions in the subdivision agreement. The Control Architect is not responsible in any way for examining or approving site (lotting) plans or working drawings with respect to any zoning or building code or permit matter or that any house can be properly built or located on its lot.

This is to certify that these plans comply with the applicable Architectural Design Guidelines approved by the Town of BRADFORD / WEST GWILLIMBURY.

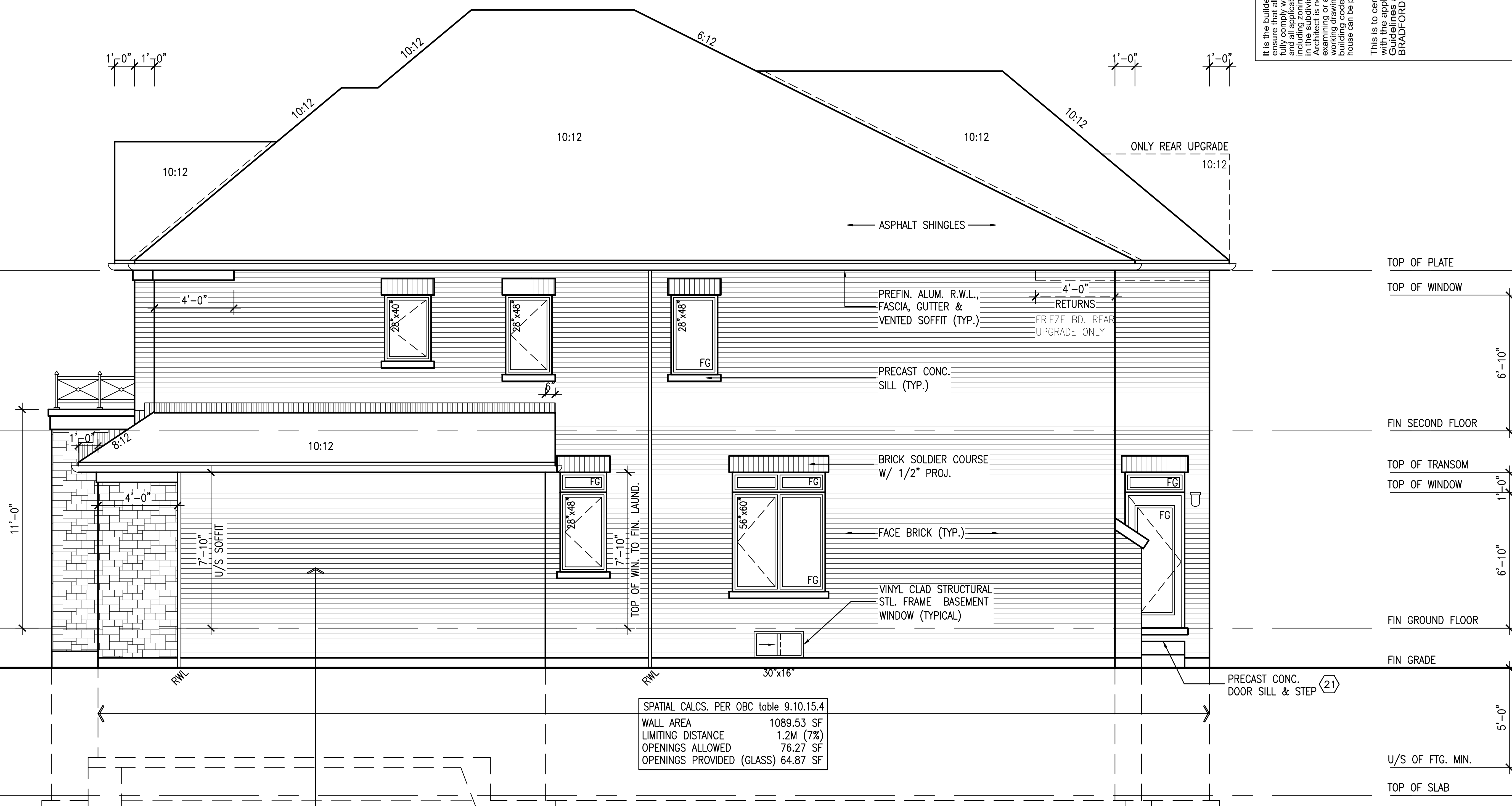


| SPATIAL CALCS. PER OBC table 9.10.15.4 | |
|---|---|
| WALL AREA | 1089.53 SF |
| LIMITING DISTANCE | 1.2M (7%) |
| OPENINGS ALLOWED | 76.27 SF |
| OPENINGS PROVIDED (GLASS) | 64.87 SF |

## BRICK VENEER CONSTRUCTION

(FOR WALLS LESS THAN 1.2M (3'-11") FROM THE LOT LINE)

45 MINUTE FIRE RATED WALL

PROVIDE A CONTINUOUS LAYER OF 12.7mm (1/2") TYPE 'X' GYPSUM BOARD (INTERIOR SIDE) INSTALLED SO THAT ALL EDGES ARE SUPPORTED, TAPED AND FILLED. SPACE BETWEEN WOOD STUDS TO BE FILLED WITH PREFORMED MINERAL FIBRE INSULATION WITH A MASS OF NOT LESS THAN 1.22 Kg/SQ.M. AND MUST FILL AT LEAST 90% OF THE CAVITY THICKNESS. THE TYPE 'X' & INSULATION MUST BE RUN CONTINUOUSLY BEHIND ALL INTERSECTING PARTITIONS, MECHANICAL CHASES, BATHTUBS, SHOWERS, ETC. ENSURE INSULATION & TYPE 'X' IS INSTALLED IN GARAGE EXTERIOR WALLS.

(REFER TO SECTION 2.3 OF SUPPLEMENTARY STANDARDS)

# RIGHT SIDE ELEVATION 'C'

| R.W.L. AS REQUIRED & AS PER MUNICIPALITY | REFER TO FRONT ELEVATION FOR TYPICAL NOTES |
|---|---|

| no. | description | date | by |
|---|---|---|---|
| 9 | . | . | . |
| 8 | . | . | . |
| 7 | . | . | . |
| 6 | . | . | . |
| 5 | . | . | . |
| 4 | . | . | . |
| 3 | . | . | . |
| 2 | REVISED AS PER ENG'S COMMENTS | APR 30-15 | RC |
| 1 | ISSUED FOR CLIENT REVIEW | 14-08-30 | LM |

The undersigned has reviewed and takes responsibility for this design and has the qualifications and meets the requirements set out in the Ontario Building Code to be a Designer.

qualification information
Wellington Jno-Baptiste 25591
name / signature
registration information BCIN
VA3 Design Inc. 42658

Contractor must verify all dimensions on the job and report any discrepancy to the Designer before proceeding with the work. All drawings and specifications are instruments of service and the property of the Designer which must be returned at the completion of the work. Drawings are not to be scaled.


VA3 DESIGN
300A Wilson Avenue
Toronto ON M3H 1S8
t 416.630.2255 f 416.630.4782
va3design.com


project name: GREEN VALLEY ESTATES
**BAYVIEW WELLINGTON**
municipality: BRADFORD, ON.
**S42-3** RIDEAU 3
project no. 13045
date: 2014-04
drawn by: LM
checked by: -
scale: 3/16" = 1'-0"
RIGHT SIDE ELEVATION 'C'
file name: 13045-S42-3
drawing no. **22**

RICHARD – H:\ARCHIVE\WORKING\2013\13045.BW\units\42'\13045-S42-3.dwg – Wed – Jun 3 2015 – 10:37 AM


All drawings specifications, related documents and design are the copyright property of VA3 DESIGN. Reproduction of this property in whole or in part is strictly prohibited without VA3 DESIGN's written permission.

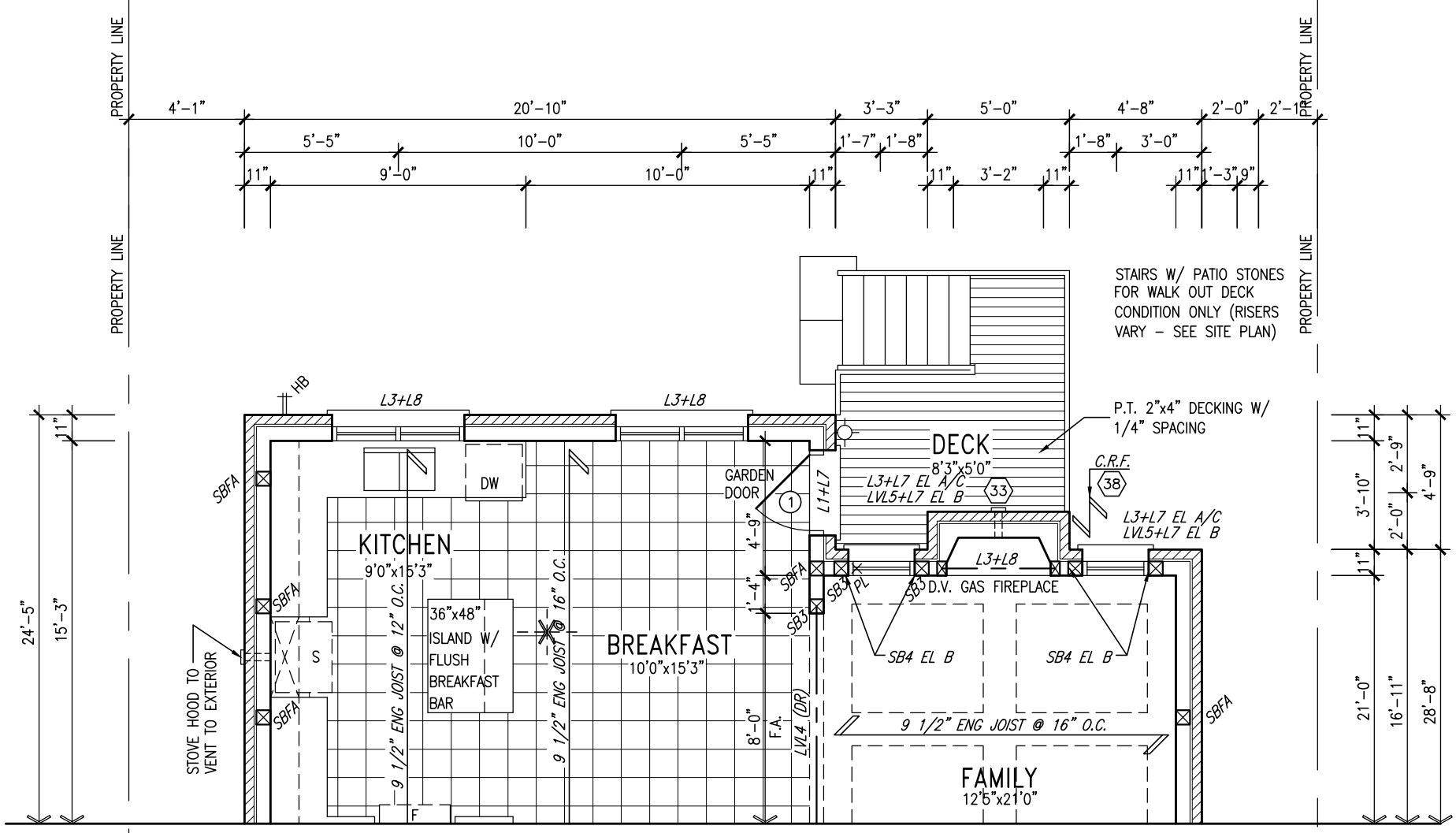


# PARTIAL GROUND FLOOR PLAN 'A', 'B' & 'C'
## W.O.D. 9R AND MORE COND.

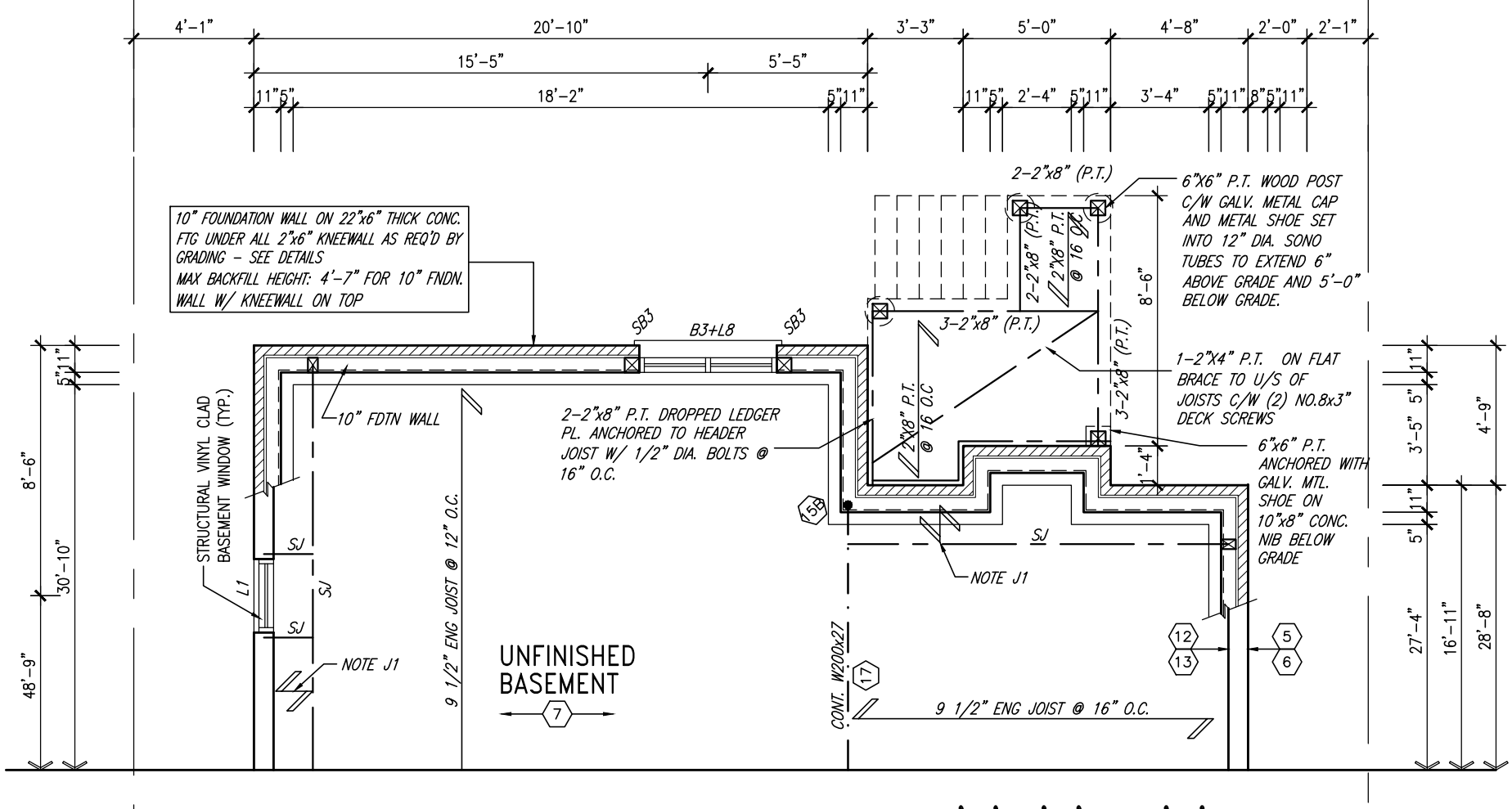


# PARTIAL BASEMENT FLOOR PLAN 'A', 'B' & 'C'
## W.O.D. 9R AND MORE COND.

NOTE: SPACE ALL FLOOR JOISTS @ 12" O.C. UNDER ALL CERAMIC TILE AREAS.

NOTE: ALL LVL'S SUPPORTING FLOOR LOADS ARE TO BE SPECIFIED BY FLOOR TRUSS MANUFACTURER.

NOTE: FLOOR FRAMING INFO REFER TO SHOP DRAWINGS FOR ALL TRUSS-JOIST INFORMATION AND DETAILS. UNLESS OTHERWISE NOTED.

NOTE J1: PROVIDE SOLID BLOCKING @ 24" O.C. WHERE FLOOR JOISTS ARE PARALLEL TO FOUNDATION WALL (TYP.)

It is the builder's complete responsibility to ensure that all plans submitted for approval fully comply with the Architectural Guidelines and all applicable regulations and requirements including zoning provisions and any provisions in the subdivision agreement. The Control Architect is not responsible in any way for examining or approving site (lotting) plans or working drawings with respect to any zoning or building code or permit matter or that any house can be properly built or located on its lot.

This is to certify that these plans comply with the applicable Architectural Design Guidelines approved by the Town of BRADFORD / WEST GWILLIMBURY.

| no. | description | date | by |
|---|---|---|---|
| 9 | . | . | . |
| 8 | . | . | . |
| 7 | . | . | . |
| 6 | . | . | . |
| 5 | . | . | . |
| 4 | . | . | . |
| 3 | . | . | . |
| 2 | REVISED AS PER ENG'S COMMENTS | APR 30-15 | RC |
| 1 | ISSUED FOR CLIENT REVIEW | 14-08-30 | LM |

The undersigned has reviewed and takes responsibility for this design and has the qualifications and meets the requirements set out in the Ontario Building Code to be a Designer.

qualification information
name: Wellington Jno-Baptiste — signature — BCIN: 25591
registration information
VA3 Design Inc. — 42658

Contractor must verify all dimensions on the job and report any discrepancy to the Designer before proceeding with the work. All drawings and specifications are instruments of service and the property of the Designer which must be returned at the completion of the work. Drawings are not to be scaled.


VA3 DESIGN
300A Wilson Avenue
Toronto ON M3H 1S8
t 416.630.2255 f 416.630.4782
va3design.com


**BAYVIEW WELLINGTON**

**S42-3**
RIDEAU 3

project name: GREEN VALLEY ESTATES
municipality: BRADFORD, ON.
project no.: 13045

date: 2014-04
W.O.D. PARTIAL PLANS
drawing no.: 23

drawn by: LM
checked by: –
scale: 3/16" = 1'-0"
file name: 13045-S42-3

RICHARD – H:\ARCHIVE\WORKING\2013\13045.BW\units\42\13045-S42-3.dwg – Wed – Jun 3 2015 – 10:37 AM


All drawings specifications, related documents and design are the copyright property of VA3 DESIGN. Reproduction of this property in whole or in part is strictly prohibited without VA3 DESIGN's written permission.

## UNINSULATED OPENINGS (PER OBC. SB-12,2.1.1.(7))

| S42-3 ELEVATION A W.O.D. | ENERGY EFFICIENCY – OBC SB12 | | |
|---|---|---|---|
| ELEVATION | WALL AREA S.F. | OPENING S.F. | PERCENTAGE |
| FRONT | 696.00 S.F. | 80.92 S.F. | 11.63 % |
| LEFT SIDE | 1041.00 S.F. | 91.78 S.F. | 8.82 % |
| RIGHT SIDE | 1041.00 S.F. | 92.95 S.F. | 8.93 % |
| REAR | 810.00 S.F. | 150.89 S.F. | 18.63 % |
| TOTAL SQ. FT. | 3588.00 S.F. | 416.54 S.F. | 11.61 % |
| TOTAL SQ. M. | 333.33 S.M. | 38.70 S.M. | 11.61 % |

## UNINSULATED OPENINGS (PER OBC. SB-12,2.1.1.(7))

| S42-3 ELEVATION B W.O.D. | ENERGY EFFICIENCY – OBC SB12 | | |
|---|---|---|---|
| ELEVATION | WALL AREA S.F. | OPENING S.F. | PERCENTAGE |
| FRONT | 688.00 S.F. | 80.50 S.F. | 11.70 % |
| LEFT SIDE | 1041.00 S.F. | 102.67 S.F. | 9.86 % |
| RIGHT SIDE | 1041.00 S.F. | 92.94 S.F. | 8.93 % |
| REAR | 810.00 S.F. | 150.89 S.F. | 18.63 % |
| TOTAL SQ. FT. | 3580.00 S.F. | 427.00 S.F. | 11.93 % |
| TOTAL SQ. M. | 332.59 S.M. | 39.67 S.M. | 11.93 % |

## UNINSULATED OPENINGS (PER OBC. SB-12,2.1.1.(7))

| S42-3 ELEVATION C W.O.D. | ENERGY EFFICIENCY – OBC SB12 | | |
|---|---|---|---|
| ELEVATION | WALL AREA S.F. | OPENING S.F. | PERCENTAGE |
| FRONT | 684.00 S.F. | 94.33 S.F. | 13.79 % |
| LEFT SIDE | 1050.00 S.F. | 91.78 S.F. | 8.74 % |
| RIGHT SIDE | 1050.00 S.F. | 95.94 S.F. | 9.14 % |
| REAR | 810.00 S.F. | 150.89 S.F. | 18.63 % |
| TOTAL SQ. FT. | 3594.00 S.F. | 432.94 S.F. | 12.05 % |
| TOTAL SQ. M. | 333.89 S.M. | 40.22 S.M. | 12.05 % |

# W.O.D. REAR ELEVATION 'A', 'B' & 'C' (9 RISERS OR MORE)

**BASEMENT WINDOW SIZES**
4R-8R USE 30"x24" VINYL CLAD STRUCTURAL STEEL FRAME BASEMENT WINDOWS

It is the builder's complete responsibility to ensure that all plans submitted for approval fully comply with the Architectural Guidelines and all applicable regulations and requirements including zoning provisions and any provisions in the subdivision agreement. The Control Architect is not responsible in any way for examining or approving site (lotting) plans or working drawings with respect to any zoning or building code or permit matter or that any house can be properly built or located on its lot.

This is to certify that these plans comply with the applicable Architectural Design Guidelines approved by the Town of BRADFORD / WEST GWILLIMBURY.

**BAYVIEW WELLINGTON**

**S42-3**
RIDEAU 3

project no. 13045

project name: GREEN VALLEY ESTATES
municipality: BRADFORD, ON.
W.O.D. REAR ELEVATION
date: 2014-04
drawn by: LM
checked by: –
scale: 3/16" = 1'-0"
file name: 13045-S42-3
drawing no. 24

RICHARD – H:\ARCHIVE\WORKING\2013\13045.BW\units\42'\13045-S42-3.dwg – Wed – Jun 3 2015 – 10:37 AM

**VA3 DESIGN**
300A Wilson Avenue
Toronto ON M3H 1S8
t 416.630.2255 f 416.630.4782
va3design.com

The undersigned has reviewed and takes responsibility for this design and has the qualifications and meets the requirements set out in the Ontario Building Code to be a Designer.

qualification information
Wellington Jno-Baptiste — signature — 25591
name — BCIN
registration information
VA3 Design Inc. — 42658

Contractor must verify all dimensions on the job and report any discrepancy to the Designer before proceeding with the work. All drawings and specifications are instruments of service and the property of the Designer which must be returned at the completion of the work. Drawings are not to be scaled.

| no. | description | date | by |
|---|---|---|---|
| 9 | . | . | . |
| 8 | . | . | . |
| 7 | . | . | . |
| 6 | . | . | . |
| 5 | . | . | . |
| 4 | . | . | . |
| 3 | . | . | . |
| 2 | REVISED AS PER ENG'S COMMENTS | APR 30-15 | RC |
| 1 | ISSUED FOR CLIENT REVIEW | 14-08-30 | LM |

All drawings specifications, related documents and design are the copyright property of VA3 DESIGN. Reproduction of this property in whole or in part is strictly prohibited without VA3 DESIGN's written permission.

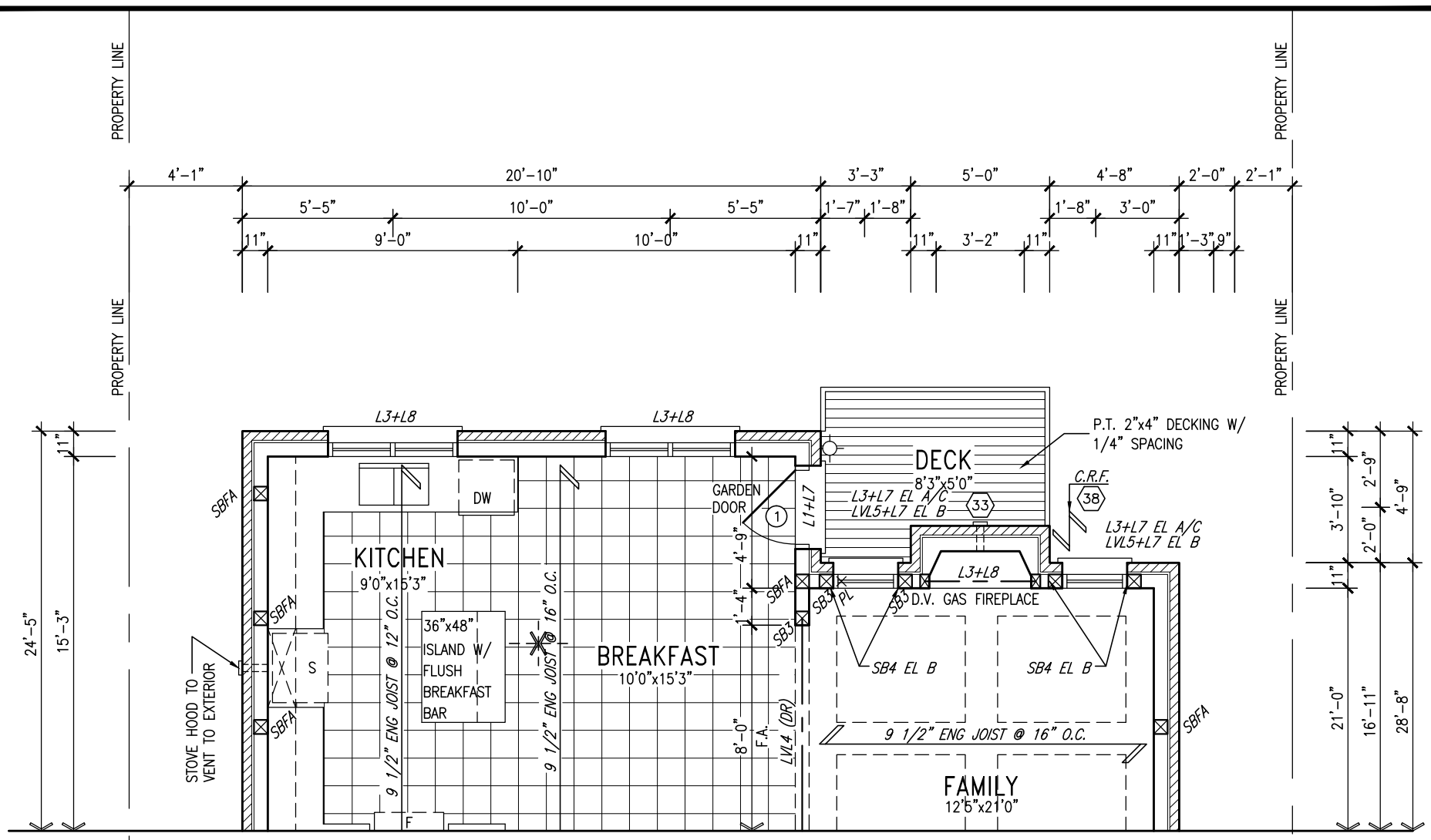


# PARTIAL W.O.B. GROUND FLOOR PLAN 'A', 'B' & 'C'

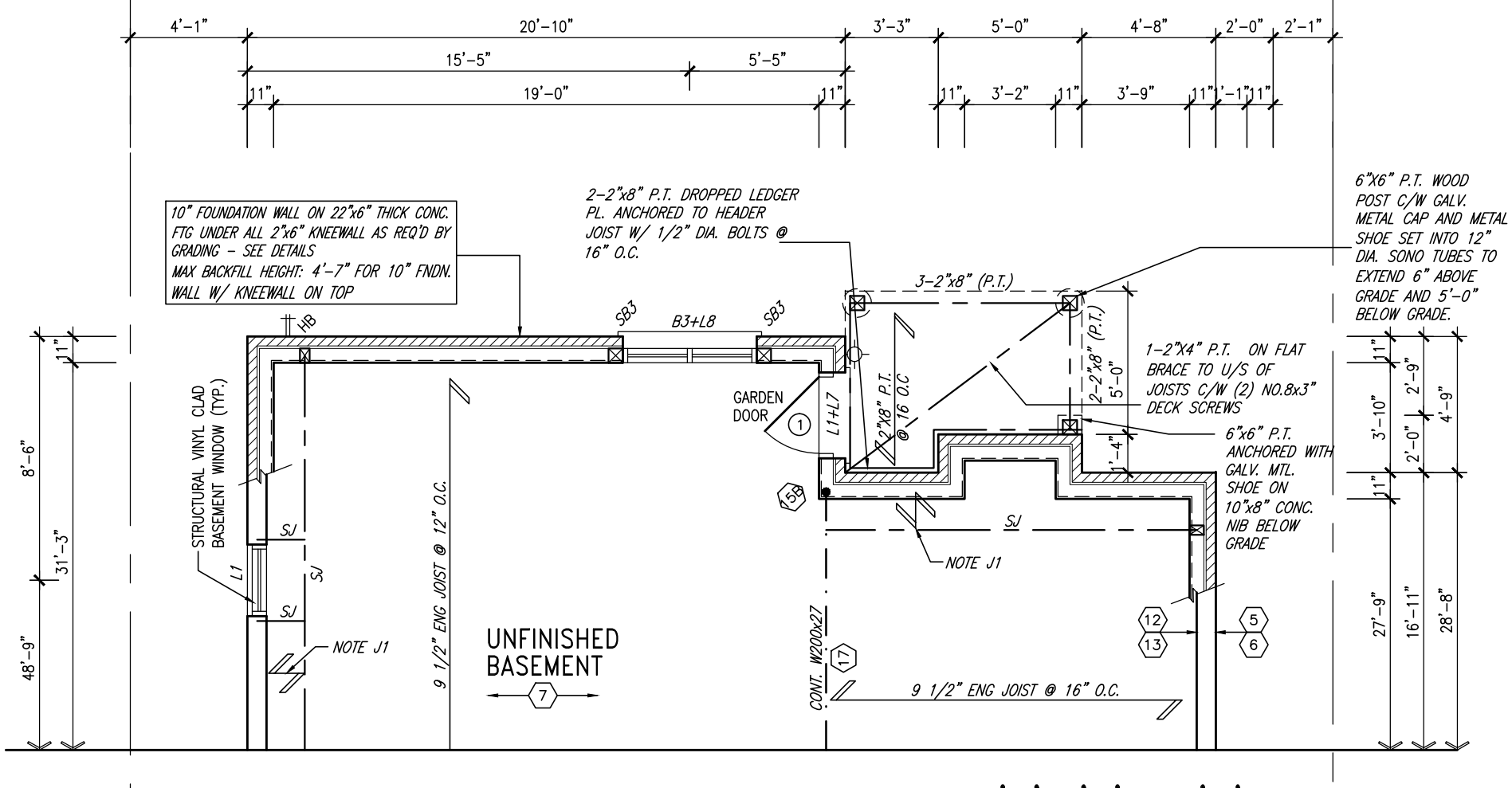


# PARTIAL W.O.B. BASEMENT FLOOR PLAN 'A', 'B' & 'C'

NOTE: SPACE ALL FLOOR JOISTS @ 12" O.C. UNDER ALL CERAMIC TILE AREAS.

NOTE: ALL LVL'S SUPPORTING FLOOR LOADS ARE TO BE SPECIFIED BY FLOOR TRUSS MANUFACTURER.

NOTE: FLOOR FRAMING INFO REFER TO SHOP DRAWINGS FOR ALL TRUSS-JOIST INFORMATION AND DETAILS. UNLESS OTHERWISE NOTED.

NOTE J1: PROVIDE SOLID BLOCKING @ 24" O.C. WHERE FLOOR JOISTS ARE PARALLEL TO FOUNDATION WALL (TYP.)

It is the builder's complete responsibility to ensure that all plans submitted for approval fully comply with the Architectural Guidelines and all applicable regulations and requirements including zoning provisions and any provisions in the subdivision agreement. The Control Architect is not responsible in any way for examining or approving site (lotting) plans or working drawings with respect to any zoning or building code or permit matter or that any house can be properly built or located on its lot.

This is to certify that these plans comply with the applicable Architectural Design Guidelines approved by the Town of BRADFORD / WEST GWILLIMBURY.

| no. | description | date | by |
|---|---|---|---|
| 9 | . | . | . |
| 8 | . | . | . |
| 7 | . | . | . |
| 6 | . | . | . |
| 5 | . | . | . |
| 4 | . | . | . |
| 3 | . | . | . |
| 2 | REVISED AS PER ENG'S COMMENTS | APR 30-15 | RC |
| 1 | ISSUED FOR CLIENT REVIEW | 14-08-30 | LM |

The undersigned has reviewed and takes responsibility for this design and has the qualifications and meets the requirements set out in the Ontario Building Code to be a Designer.

qualification information

name: Wellington Jno-Baptiste — signature — BCIN: 25591

registration information: VA3 Design Inc. — 42658

Contractor must verify all dimensions on the job and report any discrepancy to the Designer before proceeding with the work. All drawings and specifications are instruments of service and the property of the Designer which must be returned at the completion of the work. Drawings are not to be scaled.

VA3 DESIGN
300A Wilson Avenue
Toronto ON M3H 1S8
t 416.630.2255 f 416.630.4782
va3design.com

**BAYVIEW WELLINGTON**

**S42-3**
RIDEAU 3

project name: GREEN VALLEY ESTATES — municipality: BRADFORD, ON. — project no. 13045

date: 2014-04 — W.O.B. PARTIAL PLANS — drawing no. 25

drawn by: LM — checked by: - — scale: 3/16" = 1'-0" — file name: 13045-S42-3

RICHARD - H:\ARCHIVE\WORKING\2013\13045.BW\units\42\13045-S42-3.dwg - Wed - Jun 3 2015 - 10:37 AM

All drawings specifications, related documents and design are the copyright property of VA3 DESIGN. Reproduction of this property in whole or in part is strictly prohibited without VA3 DESIGN's written permission.

W.O.B. REAR ELEVATION 'A', 'B' & 'C'

It is the builder's complete responsibility to ensure that all plans submitted for approval fully comply with the Architectural Guidelines and all applicable regulations and requirements including zoning provisions and any provisions in the subdivision agreement. The Control Architect is not responsible in any way for examining or approving site (lotting) plans or working drawings with respect to any zoning or building code or permit matter or that any house can be properly built or located on its lot.

This is to certify that these plans comply with the applicable Architectural Design Guidelines approved by the Town of BRADFORD / WEST GWILLIMBURY.

BAYVIEW WELLINGTON

S42-3
RIDEAU 3

project no. 13045

drawing no. 26

project name GREEN VALLEY ESTATES

municipality BRADFORD, ON.

W.O.B. REAR ELEVATION

date 2014-04 | drawn by LM | checked by – | scale 3/16" = 1'-0" | file name 13045-S42-3

RICHARD – H:\ARCHIVE\WORKING\2013\13045.BW\units\42\13045-S42-3.dwg – Wed – Jun 3 2015 – 10:37 AM


VA3 DESIGN
300A Wilson Avenue
Toronto ON M3H 1S8
t 416.630.2255 f 416.630.4782
va3design.com


The undersigned has reviewed and takes responsibility for this design and has the qualifications and meets the requirements set out in the Ontario Building Code to be a Designer.

qualification information
Wellington Jno-Baptiste — name — signature — 25591 BCIN
registration information
VA3 Design Inc. 42658

Contractor must verify all dimensions on the job and report any discrepancy to the Designer before proceeding with the work. All drawings and specifications are instruments of service and the property of the Designer which must be returned at the completion of the work. Drawings are not to be scaled.

| no. | description | date | by |
|---|---|---|---|
| 9 | | | |
| 8 | | | |
| 7 | | | |
| 6 | | | |
| 5 | | | |
| 4 | | | |
| 3 | | | |
| 2 | REVISED AS PER ENG'S COMMENTS | APR 30-15 | RC |
| 1 | ISSUED FOR CLIENT REVIEW | 14-08-30 | LM |

All drawings specifications, related documents and design are the copyright property of VA3 DESIGN. Reproduction of this property in whole or in part is strictly prohibited without VA3 DESIGN's written permission.

## UNINSULATED OPENINGS (PER OBC. SB-12,2.1.1.(7)

| S42-3 ELEVATION A W.O.B. | ENERGY EFFICIENCY – OBC SB12 | | |
|---|---|---|---|
| ELEVATION | WALL AREA S.F. | OPENING S.F. | PERCENTAGE |
| FRONT | 696.00 S.F. | 80.92 S.F. | 11.63 % |
| LEFT SIDE | 1041.00 S.F. | 91.78 S.F. | 8.82 % |
| RIGHT SIDE | 1041.00 S.F. | 92.95 S.F. | 8.93 % |
| REAR | 908.00 S.F. | 158.67 S.F. | 17.47 % |
| TOTAL SQ. FT. | 3686.00 S.F. | 424.32 S.F. | 11.51 % |
| TOTAL SQ. M. | 342.44 S.M. | 39.42 S.M. | 11.51 % |

## UNINSULATED OPENINGS (PER OBC. SB-12,2.1.1.(7)

| S42-3 ELEVATION B W.O.B. | ENERGY EFFICIENCY – OBC SB12 | | |
|---|---|---|---|
| ELEVATION | WALL AREA S.F. | OPENING S.F. | PERCENTAGE |
| FRONT | 688.00 S.F. | 80.50 S.F. | 11.70 % |
| LEFT SIDE | 1041.00 S.F. | 102.67 S.F. | 9.86 % |
| RIGHT SIDE | 1041.00 S.F. | 92.94 S.F. | 8.93 % |
| REAR | 908.00 S.F. | 158.67 S.F. | 17.47 % |
| TOTAL SQ. FT. | 3678.00 S.F. | 434.78 S.F. | 11.82 % |
| TOTAL SQ. M. | 341.69 S.M. | 40.39 S.M. | 11.82 % |

## UNINSULATED OPENINGS (PER OBC. SB-12,2.1.1.(7)

| S42-3 ELEVATION C W.O.B. | ENERGY EFFICIENCY – OBC SB12 | | |
|---|---|---|---|
| ELEVATION | WALL AREA S.F. | OPENING S.F. | PERCENTAGE |
| FRONT | 684.00 S.F. | 94.33 S.F. | 13.79 % |
| LEFT SIDE | 1050.00 S.F. | 91.78 S.F. | 8.74 % |
| RIGHT SIDE | 1050.00 S.F. | 95.94 S.F. | 9.14 % |
| REAR | 908.00 S.F. | 158.67 S.F. | 17.47 % |
| TOTAL SQ. FT. | 3692.00 S.F. | 440.72 S.F. | 11.94 % |
| TOTAL SQ. M. | 343.00 S.M. | 40.94 S.M. | 11.94 % |

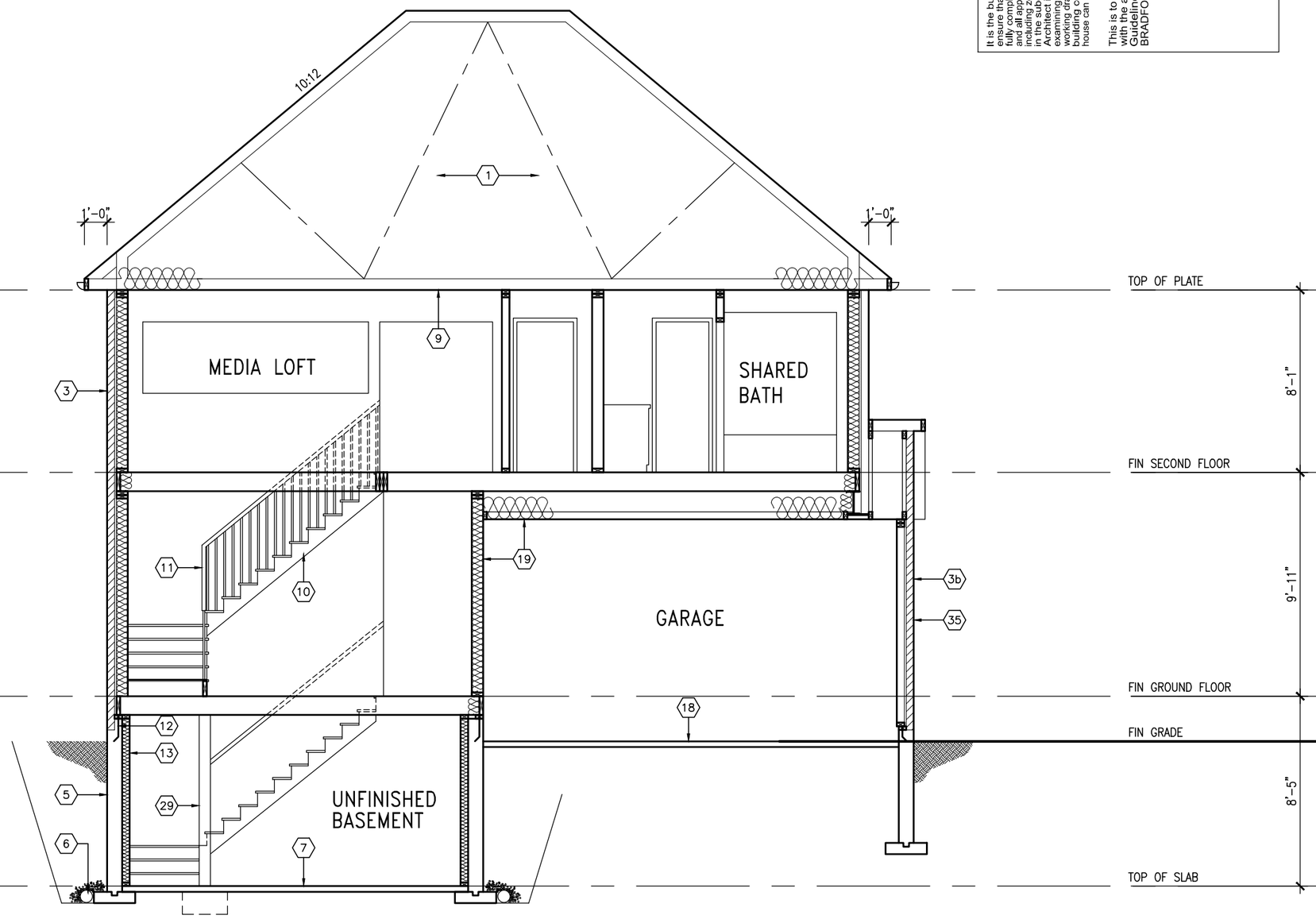


SECTION A-A

It is the builder's complete responsibility to ensure that all plans submitted for approval fully comply with the Architectural Guidelines and all applicable regulations and requirements including zoning provisions and any provisions in the subdivision agreement. The Control Architect is not responsible in any way for examining or approving site (lotting) plans or working drawings with respect to any zoning or building code or permit matter or that any house can be properly built or located on its lot.

This is to certify that these plans comply with the applicable Architectural Design Guidelines approved by the Town of BRADFORD / WEST GWILLIMBURY.

**BAYVIEW WELLINGTON**

project name: GREEN VALLEY ESTATES

municipality: BRADFORD, ON.

**S42-3**
RIDEAU 3

project no. 13045

SECTION A-A

drawing no. 27

date: 2014-04
drawn by: LM
checked by: –
scale: 3/16" = 1'-0"
file name: 13045-S42-3

RICHARD – H:\ARCHIVE\ WORKING\2013\13045.BW\units\s42\13045-S42-3.dwg – Wed – Jun 3 2015 – 10:37 AM


VA3 DESIGN
300A Wilson Avenue
Toronto, ON M3H 1S8
t 416.630.2255 f 416.630.4782
va3design.com


The undersigned has reviewed and takes responsibility for this design and has the qualifications and meets the requirements set out in the Ontario Building Code to be a Designer.

qualification information

name: Wellington Jno-Baptiste
registration information: VA3 Design Inc.
signature
BCIN 25591
42658

Contractor must verify all dimensions on the job and report any discrepancy to the Designer before proceeding with the work. All dimensions and elevations must be verified on site and the property of the Designer which must be returned at the completion of the work. Drawings are not to be scaled.

| no. | description | date | by |
|---|---|---|---|
| 9 | . | . | . |
| 8 | . | . | . |
| 7 | . | . | . |
| 6 | . | . | . |
| 5 | . | . | . |
| 4 | . | . | . |
| 3 | . | . | . |
| 2 | REVISED AS PER ENG'S COMMENTS | APR 30-15 | RC |
| 1 | ISSUED FOR CLIENT REVIEW | 14-08-30 | LM |


All drawings specifications, related documents and design are the copyright property of VA3 DESIGN. Reproduction of this property in whole or in part is strictly prohibited without VA3 DESIGN's written permission.

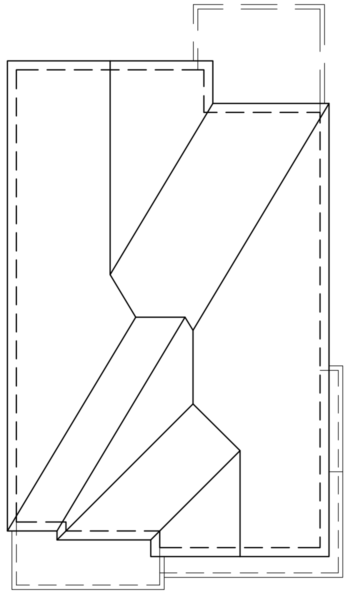

ROOF PLAN 'A'
(UPGRADED REAR)

# UPGRADED REAR ELEVATION 'A'

It is the builder's complete responsibility to ensure that all plans submitted for approval fully comply with the Architectural Guidelines and all applicable regulations and requirements including zoning provisions and any provisions in the subdivision agreement. The Control Architect is not responsible in any way for examining or approving site (lotting) plans or working drawings with respect to any zoning or building code or permit matter or that any house can be properly built or located on its lot.

This is to certify that these plans comply with the applicable Architectural Design Guidelines approved by the Town of BRADFORD / WEST GWILLIMBURY.

| no. | description | date | by |
|---|---|---|---|
| 9 | . | . | . |
| 8 | . | . | . |
| 7 | . | . | . |
| 6 | . | . | . |
| 5 | . | . | . |
| 4 | . | . | . |
| 3 | . | . | . |
| 2 | REVISED AS PER ENG'S COMMENTS | APR 30-15 | RC |
| 1 | ISSUED FOR CLIENT REVIEW | 14-08-30 | LM |

The undersigned has reviewed and takes responsibility for this design and has the qualifications and meets the requirements set out in the Ontario Building Code to be a Designer.

qualification information
**Wellington Jno-Baptiste** signature 25591
name BCIN
registration information
**VA3 Design Inc.** 42658

Contractor must verify all dimensions on the job and report any discrepancy to the Designer before proceeding with the work. All drawings and specifications are instruments of service and the property of the Designer which must be returned at the completion of the work. Drawings are not to be scaled.


VA3 DESIGN
300A Wilson Avenue
Toronto ON M3H 1S8
t 416.630.2255 f 416.630.4782
va3design.com


**BAYVIEW WELLINGTON**

**S42-3**
RIDEAU 3

project no. 13045

project name: GREEN VALLEY ESTATES
municipality: BRADFORD, ON.

date: 2014-04

UPGRADED REAR ELEVATION 'A'

drawing no. 28

drawn by: LM
checked by: -
scale: 3/16" = 1'-0"
file name: 13045-S42-3

RICHARD - H:\ARCHIVE\WORKING\2013\13045.BW\units\42'\13045-S42-3.dwg - Wed - Jun 3 2015 - 10:37 AM


All drawings specifications, related documents and design are the copyright property of VA3 DESIGN. Reproduction of this property in whole or in part is strictly prohibited without VA3 DESIGN's written permission.

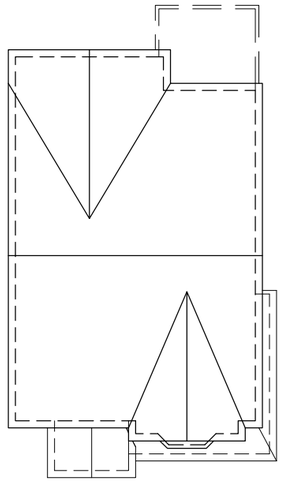

ROOF PLAN 'B'
(UPGRADED REAR)

UPGRADED REAR ELEVATION 'B'

It is the builder's complete responsibility to ensure that all plans submitted for approval fully comply with the Architectural Guidelines and all applicable regulations and requirements including zoning provisions and any provisions in the subdivision agreement. The Control Architect is not responsible in any way for examining or approving site (lotting) plans or working drawings with respect to any zoning or building code or permit matter or that any house can be properly built or located on its lot.

This is to certify that these plans comply with the applicable Architectural Design Guidelines approved by the Town of BRADFORD / WEST GWILLIMBURY.

**BAYVIEW WELLINGTON**

project name: GREEN VALLEY ESTATES
municipality: BRADFORD, ON.

**S42-3**
RIDEAU 3

project no. 13045

UPGRADED REAR ELEVATION 'B'

date: 2014-04
drawn by: LM
checked by: -
scale: 3/16" = 1'-0"
file name: 13045-S42-3
drawing no. 29

RICHARD - H:\ARCHIVE\WORKING\2013\13045.BW\units\s42\13045-S42-3.dwg - Wed - Jun 3 2015 - 10:37 AM


VA3 DESIGN
300A Wilson Avenue
Toronto ON M3H 1S8
t 416.630.2255 f 416.630.4782
va3design.com


The undersigned has reviewed and takes responsibility for this design and has the qualifications and meets the requirements set out in the Ontario Building Code to be a Designer.

| | |
|---|---|
| qualification information | |
| name | Wellington Jno-Baptiste |
| registration information | 25591 BCIN |
| VA3 Design Inc. | 42658 |

signature

Contractor must verify all dimensions on the job and report any discrepancy to the Designer before proceeding with the work. All drawings and specifications are instruments of service and the property of the Designer which must be returned at the completion of the work. Drawings are not to be scaled.

| no. | description | date | by |
|---|---|---|---|
| 2 | REVISED AS PER ENG'S COMMENTS | APR 30-15 | RC |
| 1 | ISSUED FOR CLIENT REVIEW | 14-08-30 | LM |


All drawings specifications, related documents and design are the copyright property of VA3 DESIGN. Reproduction of this property in whole or in part is strictly prohibited without VA3 DESIGN's written permission.

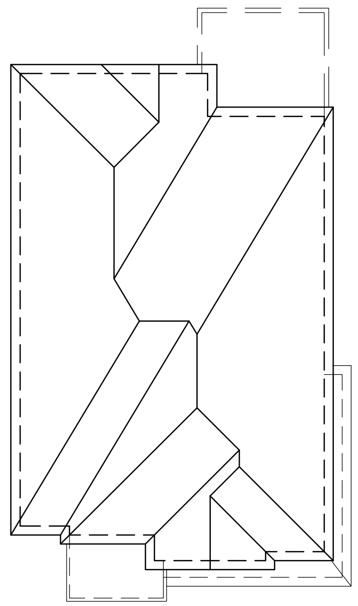

## ROOF PLAN 'C'
(UPGRADED REAR)

## UPGRADED REAR ELEVATION 'C'

It is the builder's complete responsibility to ensure that all plans submitted for approval fully comply with the Architectural Guidelines and all applicable regulations and requirements including zoning provisions and any provisions in the subdivision agreement. The Control Architect is not responsible in any way for examining or approving site (lotting) plans or working drawings with respect to any zoning or building code or permit matter or that any house can be properly built or located on its lot.

This is to certify that these plans comply with the applicable Architectural Design Guidelines approved by the Town of BRADFORD / WEST GWILLIMBURY.

| no. | description | date | by |
|---|---|---|---|
| 9 | . | . | . |
| 8 | . | . | . |
| 7 | . | . | . |
| 6 | . | . | . |
| 5 | . | . | . |
| 4 | . | . | . |
| 3 | . | . | . |
| 2 | REVISED AS PER ENG'S COMMENTS | APR 30-15 | RC |
| 1 | ISSUED FOR CLIENT REVIEW | 14-08-30 | LM |

The undersigned has reviewed and takes responsibility for this design and has the qualifications and meets the requirements set out in the Ontario Building Code to be a Designer.

qualification information
Wellington Jno-Baptiste — signature — 25591
name — BCIN
registration information
VA3 Design Inc. — 42658

Contractor must verify all dimensions on the job and report any discrepancy to the Designer before proceeding with the work. All drawings and specifications are instruments of service and the property of the Designer which must be returned at the completion of the work. Drawings are not to be scaled.

VA3 DESIGN
300A Wilson Avenue
Toronto ON M3H 1S8
t 416.630.2255 f 416.630.4782
va3design.com

# BAYVIEW WELLINGTON

S42-3
RIDEAU 3

project name: GREEN VALLEY ESTATES
municipality: BRADFORD, ON.
project no.: 13045
date: 2014-04
UPGRADED REAR ELEVATION 'C'
drawing no.: 30
drawn by: LM
checked by: -
scale: 3/16" = 1'-0"
file name: 13045-S42-3
RICHARD - H:\ARCHIVE\WORKING\2013\13045.BW\units\42'\13045-S42-3.dwg - Wed - Jun 3 2015 - 10:37 AM

All drawings specifications, related documents and design are the copyright property of VA3 DESIGN. Reproduction of this property in whole or in part is strictly prohibited without VA3 DESIGN's written permission.

It is the builder's complete responsibility to ensure that all plans submitted for approval fully comply with the Architectural Guidelines and all applicable regulations and requirements including zoning provisions and any provisions in the subdivision agreement. The Control Architect is not responsible in any way for examining or approving site (lotting) plans or working drawings with respect to any zoning or building code or permit matter or that any house can be properly built or located on its lot.

This is to certify that these plans comply with the applicable Architectural Design Guidelines approved by the Town of BRADFORD / WEST GWILLIMBURY.

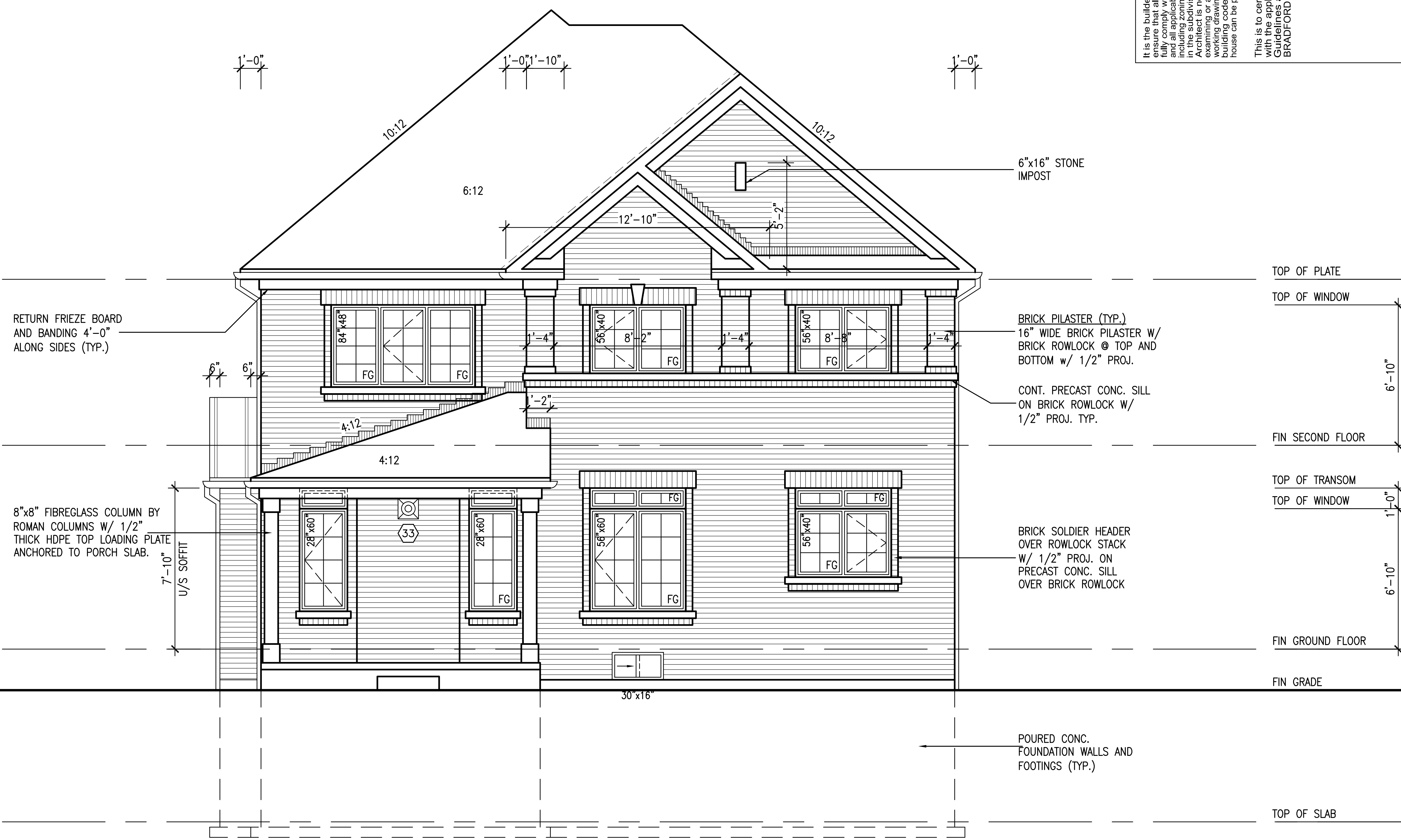


# UPGRADED REAR ELEVATION 'A' w/ OPT. LOGGIA

| no. | description | date | by |
|---|---|---|---|
| 9 | . | . | . |
| 8 | . | . | . |
| 7 | . | . | . |
| 6 | . | . | . |
| 5 | . | . | . |
| 4 | . | . | . |
| 3 | . | . | . |
| 2 | REVISED AS PER ENG'S COMMENTS | APR 30-15 | RC |
| 1 | ISSUED FOR CLIENT REVIEW | 14-08-30 | LM |

The undersigned has reviewed and takes responsibility for this design and has the qualifications and meets the requirements set out in the Ontario Building Code to be a Designer.

qualification information
Wellington Jno-Baptiste (signature) 25591
name / signature / BCIN
registration information
VA3 Design Inc. 42658

Contractor must verify all dimensions on the job and report any discrepancy to the Designer before proceeding with the work. All drawings and specifications are instruments of service and the property of the Designer which must be returned at the completion of the work. Drawings are not to be scaled.


VA3 DESIGN
300A Wilson Avenue
Toronto ON M3H 1S8
t 416.630.2255 f 416.630.4782
va3design.com


**BAYVIEW WELLINGTON**

**S42-3**
RIDEAU 3

project name: GREEN VALLEY ESTATES
municipality: BRADFORD, ON.
project no.: 13045
date: 2014-04
UPGRADED REAR ELEVATION 'A' w/ OPT. LOGGIA
drawing no.: 31
drawn by: LM
checked by: -
scale: 3/16" = 1'-0"
file name: 13045-S42-3

RICHARD - H:\ARCHIVE\WORKING\2013\13045.BW\units\42\13045-S42-3.dwg - Wed - Jun 3 2015 - 10:37 AM


All drawings specifications, related documents and design are the copyright property of VA3 DESIGN. Reproduction of this property in whole or in part is strictly prohibited without VA3 DESIGN's written permission.

# UPGRADED REAR ELEVATION 'B' w/ OPT. LOGGIA

It is the builder's complete responsibility to ensure that all plans submitted for approval fully comply with the Architectural Guidelines and all applicable regulations and requirements including zoning provisions and any provisions in the subdivision agreement. The Control Architect is not responsible in any way for examining or approving site (lotting) plans or working drawings with respect to any zoning or building code or permit matter or that any house can be properly built or located on its lot.

This is to certify that these plans comply with the applicable Architectural Design Guidelines approved by the Town of BRADFORD / WEST GWILLIMBURY.

**S42-3**
RIDEAU 3

project no. 13045

drawing no. **32**

**BAYVIEW WELLINGTON**

project name: GREEN VALLEY ESTATES
municipality: BRADFORD, ON.

date: 2014-04
drawn by: LM
checked by: -
scale: 3/16" = 1'-0"

UPGRADED REAR ELEVATION 'B' w/ OPT. LOGGIA

file name: 13045-S42-3

RICHARD — H:\ARCHIVE\WORKING\2013\13045.BW\units\42\13045-S42-3.dwg — Wed — Jun 3 2015 — 10:37 AM

**VA3 DESIGN**
300A Wilson Avenue
Toronto ON M3H 1S8
t 416.630.2255 f 416.630.4782
va3design.com

The undersigned has reviewed and takes responsibility for this design and has the qualifications and meets the requirements set out in the Ontario Building Code to be a Designer.

qualification information
**Wellington Jno-Baptiste** — 25591
name — signature — BCIN
registration information
**VA3 Design Inc.** — 42658

Contractor must verify all dimensions on the job and report any discrepancy to the Designer before proceeding with the work. All drawings and specifications are instruments of service and the property of the Designer which must be returned at the completion of the work. Drawings are not to be scaled.

| no. | description | date | by |
|---|---|---|---|
| 9 | . | . | . |
| 8 | . | . | . |
| 7 | . | . | . |
| 6 | . | . | . |
| 5 | . | . | . |
| 4 | . | . | . |
| 3 | . | . | . |
| 2 | REVISED AS PER ENG'S COMMENTS | APR 30-15 | RC |
| 1 | ISSUED FOR CLIENT REVIEW | 14-08-30 | LM |

All drawings specifications, related documents and design are the copyright property of VA3 DESIGN. Reproduction of this property in whole or in part is strictly prohibited without VA3 DESIGN's written permission.

# UPGRADED REAR ELEVATION 'C' w/ OPT. LOGGIA

It is the builder's complete responsibility to ensure that all plans submitted for approval fully comply with the Architectural Guidelines and all applicable regulations and requirements including zoning provisions and any provisions in the subdivision agreement. The Control Architect is not responsible in any way for examining or approving site (lotting) plans or working drawings with respect to any zoning or building code or permit matter or that any house can be properly built or located on its lot.

This is to certify that these plans comply with the applicable Architectural Design Guidelines approved by the Town of BRADFORD / WEST GWILLIMBURY.

**BAYVIEW WELLINGTON**

**S42-3**
RIDEAU 3

project no. 13045

project name: GREEN VALLEY ESTATES

municipality: BRADFORD, ON.

UPGRADED REAR ELEVATION 'C' w/ OPT. LOGGIA

date: 2014-04
drawn by: LM
checked by: -
scale: 3/16" = 1'-0"
file name: 13045-S42-3
drawing no. 33

RICHARD – H:\ARCHIVE\WORKING\2013\13045.BW\units\42's\13045-S42-3.dwg – Wed – Jun 3 2015 – 10:37 AM

**VA3 DESIGN**
300A Wilson Avenue
Toronto ON M3H 1S8
t 416.630.2255 f 416.630.4782
va3design.com

The undersigned has reviewed and takes responsibility for this design and has the qualifications and meets the requirements set out in the Ontario Building Code to be a Designer.

qualification information
Wellington Jno-Baptiste | signature | BCIN 25591
registration information
VA3 Design Inc. | 42658

Contractor must verify all dimensions on the job and report any discrepancy to the Designer before proceeding with the work. All drawings and specifications are instruments of service and the property of the Designer which must be returned at the completion of the work. Drawings are not to be scaled.

| no. | description | date | by |
|---|---|---|---|
| 9 | | | |
| 8 | | | |
| 7 | | | |
| 6 | | | |
| 5 | | | |
| 4 | | | |
| 3 | | | |
| 2 | REVISED AS PER ENG'S COMMENTS | APR 30-15 | RC |
| 1 | ISSUED FOR CLIENT REVIEW | 14-08-30 | LM |

All drawings specifications, related documents and design are the copyright property of VA3 DESIGN. Reproduction of this property in whole or in part is strictly prohibited without VA3 DESIGN's written permission.

## UNINSULATED OPENINGS (PER OBC. SB-12,2.1.1.(7)

| S42-3 ELEVATION A W.O.D. | ENERGY EFFICIENCY – OBC SB12 | | |
|---|---|---|---|
| ELEVATION | WALL AREA S.F. | OPENING S.F. | PERCENTAGE |
| FRONT | 696.00 S.F. | 80.92 S.F. | 11.63 % |
| LEFT SIDE | 1041.00 S.F. | 91.78 S.F. | 8.82 % |
| RIGHT SIDE | 1041.00 S.F. | 92.95 S.F. | 8.93 % |
| REAR | 810.00 S.F. | 150.89 S.F. | 18.63 % |
| TOTAL SQ. FT. | 3588.00 S.F. | 416.54 S.F. | 11.61 % |
| TOTAL SQ. M. | 333.33 S.M. | 38.70 S.M. | 11.61 % |

It is the builder's complete responsibility to ensure that all plans submitted for approval fully comply with the Architectural Guidelines and all applicable regulations and requirements including zoning provisions and any provisions in the subdivision agreement. The Control Architect is not responsible in any way for examining or approving site (lotting) plans or working drawings with respect to any zoning or building code or permit matter or that any house can be properly built or located on its lot.

This is to certify that these plans comply with the applicable Architectural Design Guidelines approved by the Town of BRADFORD / WEST GWILLIMBURY.

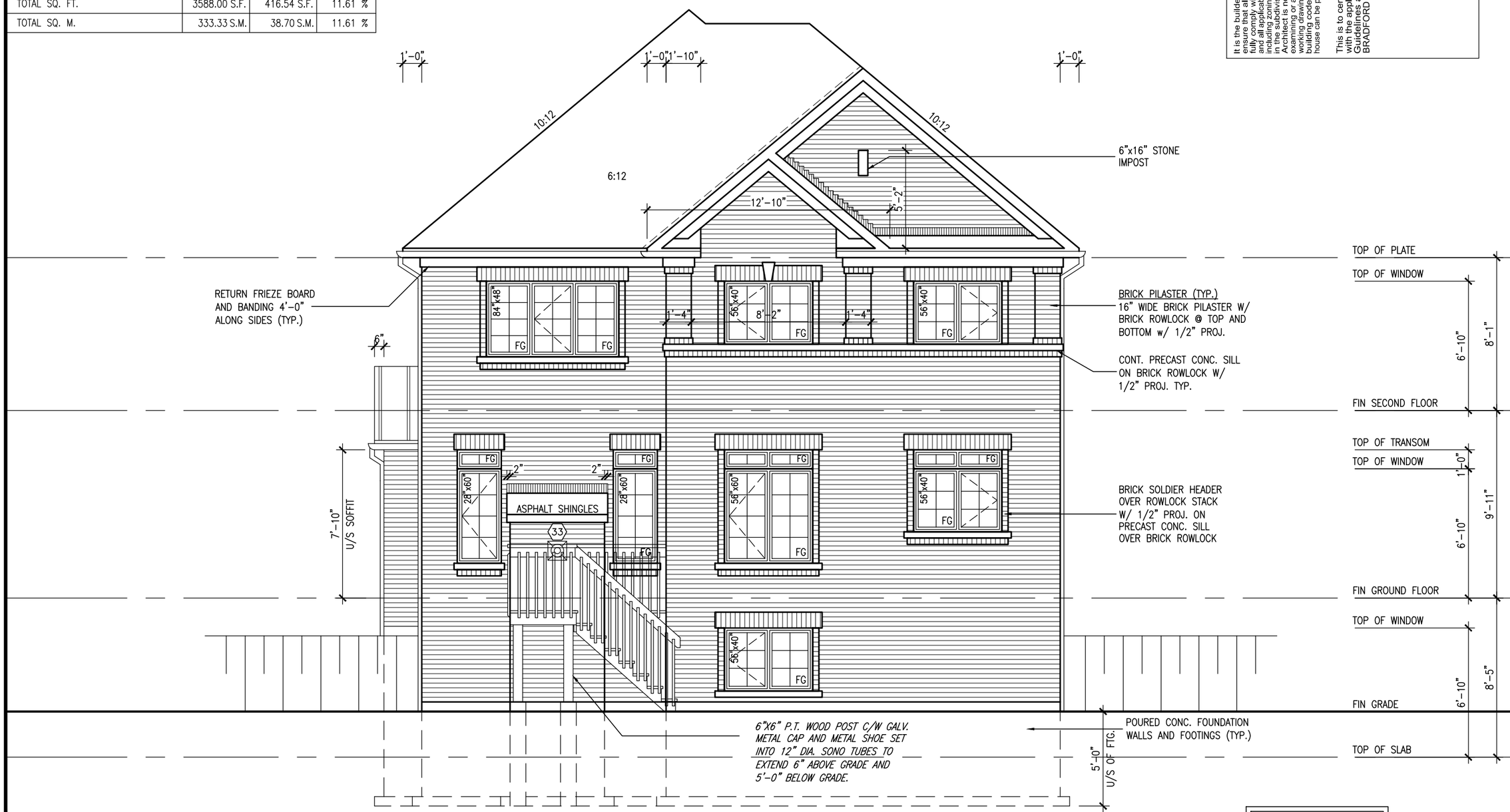


# UPGRADED REAR ELEVATION 'A'– 9R OR MORE W.O.D. CONDITION

**BASEMENT WINDOW SIZES**
4R–8R USE 30"x24" VINYL CLAD STRUCTURAL STEEL FRAME BASEMENT WINDOWS

**S42-3**
RIDEAU 3

project no. 13045

**BAYVIEW WELLINGTON**

municipality: BRADFORD, ON.

project name: GREEN VALLEY ESTATES

UPGRADED REAR ELEV. 'A' (W.O.D. CONDITION)

drawing no. **34**

date: 2014-04 | scale: 3/16" = 1'-0" | file name: 13045-S42-3

drawn by: LM | checked by: – | RICHARD – H:\ARCHIVE\WORKING\2013\13045.BW\units\s42\13045-S42-3.dwg – Wed – Jun 3 2015 – 10:37 AM


VA3 DESIGN
300A Wilson Avenue
Toronto, ON M3H 1S8
t 416.630.2255 f 416.630.4782
va3design.com


The undersigned has reviewed and takes responsibility for this design and has the qualifications and meets the requirements set out in the Ontario Building Code to be a Designer.

| qualification information | signature | |
|---|---|---|
| Wellington Jno-Baptiste | | 25591 |
| name | | BCIN |
| registration information: VA3 Design Inc. | | 42658 |

Contractor must verify all dimensions on the job and report any discrepancy to the Designer before proceeding with the work. All drawings and specifications are instruments of service and the property of the Designer which must be returned at the completion of the work. Drawings are not to be scaled.

| no. | description | date | by |
|---|---|---|---|
| 9 | . | . | . |
| 8 | . | . | . |
| 7 | . | . | . |
| 6 | . | . | . |
| 5 | . | . | . |
| 4 | . | . | . |
| 3 | . | . | . |
| 2 | REVISED AS PER ENG'S COMMENTS | APR 30–15 | RC |
| 1 | ISSUED FOR CLIENT REVIEW | 14–08–30 | LM |


All drawings specifications, related documents and design are the copyright property of VA3 DESIGN. Reproduction of this property in whole or in part is strictly prohibited without VA3 DESIGN's written permission.

| UNINSULATED OPENINGS (PER OBC. SB-12,2.1.1.(7) | | | |
|---|---|---|---|
| S42-3 ELEVATION B W.O.D. | ENERGY EFFICIENCY - OBC SB12 | | |
| ELEVATION | WALL AREA S.F. | OPENING S.F. | PERCENTAGE |
| FRONT | 688.00 S.F. | 80.50 S.F. | 11.70 % |
| LEFT SIDE | 1041.00 S.F. | 102.67 S.F. | 9.86 % |
| RIGHT SIDE | 1041.00 S.F. | 92.94 S.F. | 8.93 % |
| REAR | 810.00 S.F. | 150.89 S.F. | 18.63 % |
| TOTAL SQ. FT. | 3580.00 S.F. | 427.00 S.F. | 11.93 % |
| TOTAL SQ. M. | 332.59 S.M. | 39.67 S.M. | 11.93 % |

UPGRADED REAR ELEVATION 'B'- 9R OR MORE W.O.D. CONDITION

BASEMENT WINDOW SIZES
4R-8R USE 30"x24" VINYL CLAD STRUCTURAL STEEL FRAME BASEMENT WINDOWS

It is the builder's complete responsibility to ensure that all plans submitted for approval fully comply with the Architectural Guidelines and all applicable regulations and requirements including zoning provisions and any provisions in the subdivision agreement. The Control Architect is not responsible in any way for examining or approving site (lotting) plans or working drawings with respect to any zoning or building code or permit matter or that any house can be properly built or located on its lot.

This is to certify that these plans comply with the applicable Architectural Design Guidelines approved by the Town of BRADFORD / WEST GWILLIMBURY.

**BAYVIEW WELLINGTON**

**S42-3**
RIDEAU 3

project no. 13045

project name: GREEN VALLEY ESTATES
municipality: BRADFORD, ON.

date: 2014-04
UPGRADED REAR ELEV. 'B' (W.O.D. CONDITION)

drawing no. **35**

drawn by: LM | checked by: - | scale: 3/16" = 1'-0" | file name: 13045-S42-3

RICHARD - H:\ARCHIVE\WORKING\2013\13045.BW\units\42'\13045-S42-3.dwg - Wed - Jun 3 2015 - 10:37 AM


VA3 DESIGN
300A Wilson Avenue
Toronto ON M3H 1S8
t 416.630.2255 f 416.630.4782
va3design.com


The undersigned has reviewed and takes responsibility for this design and has the qualifications and meets the requirements set out in the Ontario Building Code to be a Designer.

qualification information
Wellington Jno-Baptiste (signature) 25591
name / signature / BCIN
registration information
VA3 Design Inc. 42658
BCIN

Contractor must verify all dimensions on the job and report any discrepancy to the Designer before proceeding with the work. All drawings and specifications are instruments of service and the property of the Designer which must be returned at the completion of the work. Drawings are not to be scaled.

| no. | description | date | by |
|---|---|---|---|
| 9 | . | . | . |
| 8 | . | . | . |
| 7 | . | . | . |
| 6 | . | . | . |
| 5 | . | . | . |
| 4 | . | . | . |
| 3 | . | . | . |
| 2 | REVISED AS PER ENG'S COMMENTS | APR 30-15 | RC |
| 1 | ISSUED FOR CLIENT REVIEW | 14-08-30 | LM |


All drawings specifications, related documents and design are the copyright property of VA3 DESIGN. Reproduction of this property in whole or in part is strictly prohibited without VA3 DESIGN's written permission.

UNINSULATED OPENINGS (PER OBC. SB-12,2.1.1.(7)

| S42-3 ELEVATION C W.O.D. | ENERGY EFFICIENCY – OBC SB12 | | |
|---|---|---|---|
| ELEVATION | WALL AREA S.F. | OPENING S.F. | PERCENTAGE |
| FRONT | 684.00 S.F. | 94.33 S.F. | 13.79 % |
| LEFT SIDE | 1050.00 S.F. | 91.78 S.F. | 8.74 % |
| RIGHT SIDE | 1050.00 S.F. | 95.94 S.F. | 9.14 % |
| REAR | 810.00 S.F. | 150.89 S.F. | 18.63 % |
| TOTAL SQ. FT. | 3594.00 S.F. | 432.94 S.F. | 12.05 % |
| TOTAL SQ. M. | 333.89 S.M. | 40.22 S.M. | 12.05 % |

It is the builder's complete responsibility to ensure that all plans submitted for approval fully comply with the Architectural Guidelines and all applicable regulations and requirements including zoning provisions and any provisions in the subdivision agreement. The Control Architect is not responsible in any way for examining or approving site (lotting) plans or working drawings with respect to any zoning or building code or permit matter or that any house can be properly built or located on its lot.

This is to certify that these plans comply with the applicable Architectural Design Guidelines approved by the Town of BRADFORD / WEST GWILLIMBURY.

UPGRADED REAR ELEVATION 'C'– 9R OR MORE W.O.D. CONDITION

BASEMENT WINDOW SIZES
4R-8R USE 30"x24" VINYL CLAD STRUCTURAL STEEL FRAME BASEMENT WINDOWS

S42-3
RIDEAU 3

project no. 13045

drawing no. 36

BAYVIEW WELLINGTON

project name GREEN VALLEY ESTATES

municipality BRADFORD, ON.

UPGRADED REAR ELEV. 'C' (W.O.D. CONDITION)

date 2014-04

drawn by LM

checked by –

scale 3/16" = 1'-0"

file name 13045-S42-3

RICHARD – H:\ARCHIVE\WORKING\2013\13045.BW\units\42's\13045-S42-3.dwg – Wed – Jun 3 2015 – 10:37 AM


VA3 DESIGN
300A Wilson Avenue
Toronto ON M3H 1S8
t 416.630.2255 f 416.630.4782
va3design.com


The undersigned has reviewed and takes responsibility for this design and has the qualifications and meets the requirements set out in the Ontario Building Code to be a Designer.

qualification information
Wellington Jno-Baptiste 25591
name signature BCIN
registration information
VA3 Design Inc. 42658

Contractor must verify all dimensions on the job and report any discrepancy to the Designer before proceeding with the work. All drawings and specifications are instruments of service and the property of the Designer which must be returned at the completion of the work. Drawings are not to be scaled.

| no. | description | date | by |
|---|---|---|---|
| 9 | | | |
| 8 | | | |
| 7 | | | |
| 6 | | | |
| 5 | | | |
| 4 | | | |
| 3 | | | |
| 2 | REVISED AS PER ENG'S COMMENTS | APR 30-15 | RC |
| 1 | ISSUED FOR CLIENT REVIEW | 14-08-30 | LM |


All drawings specifications, related documents and design are the copyright property of VA3 DESIGN. Reproduction of this property in whole or in part is strictly prohibited without VA3 DESIGN's written permission.

| UNINSULATED OPENINGS (PER OBC. SB-12,2.1.1.(7)) | | | |
|---|---|---|---|
| S42-3 ELEVATION A W.O.B. | ENERGY EFFICIENCY - OBC SB12 | | |
| ELEVATION | WALL AREA S.F. | OPENING S.F. | PERCENTAGE |
| FRONT | 696.00 S.F. | 80.92 S.F. | 11.63 % |
| LEFT SIDE | 1041.00 S.F. | 91.78 S.F. | 8.82 % |
| RIGHT SIDE | 1041.00 S.F. | 92.95 S.F. | 8.93 % |
| REAR | 908.00 S.F. | 158.67 S.F. | 17.47 % |
| TOTAL SQ. FT. | 3686.00 S.F. | 424.32 S.F. | 11.51 % |
| TOTAL SQ. M. | 342.44 S.M. | 39.42 S.M. | 11.51 % |

It is the builder's complete responsibility to ensure that all plans submitted for approval fully comply with the Architectural Guidelines and all applicable regulations and requirements including zoning provisions and any provisions in the subdivision agreement. The Control Architect is not responsible in any way for examining or approving site (lotting) plans or working drawings with respect to any zoning or building code or permit matter or that any house can be properly built or located on its lot.

This is to certify that these plans comply with the applicable Architectural Design Guidelines approved by the Town of BRADFORD / WEST GWILLIMBURY.

UPGRADED REAR ELEVATION 'A'- W.O.B. CONDITION

| no. | description | date | by |
|---|---|---|---|
| 9 | . | . | . |
| 8 | . | . | . |
| 7 | . | . | . |
| 6 | . | . | . |
| 5 | . | . | . |
| 4 | . | . | . |
| 3 | . | . | . |
| 2 | REVISED AS PER ENG'S COMMENTS | APR 30-15 | RC |
| 1 | ISSUED FOR CLIENT REVIEW | 14-08-30 | LM |

The undersigned has reviewed and takes responsibility for this design and has the qualifications and meets the requirements set out in the Ontario Building Code to be a Designer.

qualification information
Wellington Jno-Baptiste (signature) 25591
name signature BCIN
registration information
VA3 Design Inc. 42658

Contractor must verify all dimensions on the job and report any discrepancy to the Designer before proceeding with the work. All drawings and specifications are instruments of service and the property of the Designer which must be returned at the completion of the work. Drawings are not to be scaled.


VA3 DESIGN
300A Wilson Avenue
Toronto ON M3H 1S8
t 416.630.2255 f 416.630.4782
va3design.com


**BAYVIEW WELLINGTON**

project name: GREEN VALLEY ESTATES
municipality: BRADFORD, ON.

**S42-3**
RIDEAU 3

project no. 13045

date: 2014-04
UPGRADED REAR ELEV. 'A' (W.O.B. CONDITION)
drawn by: LM
checked by: -
scale: 3/16" = 1'-0"
file name: 13045-S42-3
drawing no. 37

RICHARD - H:\ARCHIVE\WORKING\2013\13045.BW\units\42'\13045-S42-3.dwg - Wed - Jun 3 2015 - 10:37 AM


All drawings specifications, related documents and design are the copyright property of VA3 DESIGN. Reproduction of this property in whole or in part is strictly prohibited without VA3 DESIGN's written permission.

## UNINSULATED OPENINGS (PER OBC. SB-12,2.1.1.(7))

| S42-3 ELEVATION B W.O.B. | ENERGY EFFICIENCY – OBC SB12 | | |
|---|---|---|---|
| ELEVATION | WALL AREA S.F. | OPENING S.F. | PERCENTAGE |
| FRONT | 688.00 S.F. | 80.50 S.F. | 11.70 % |
| LEFT SIDE | 1041.00 S.F. | 102.67 S.F. | 9.86 % |
| RIGHT SIDE | 1041.00 S.F. | 92.94 S.F. | 8.93 % |
| REAR | 908.00 S.F. | 158.67 S.F. | 17.47 % |
| TOTAL SQ. FT. | 3678.00 S.F. | 434.78 S.F. | 11.82 % |
| TOTAL SQ. M. | 341.69 S.M. | 40.39 S.M. | 11.82 % |

UPGRADED REAR ELEVATION 'B'- W.O.B. CONDITION

It is the builder's complete responsibility to ensure that all plans submitted for approval fully comply with the Architectural Guidelines and all applicable regulations and requirements including zoning provisions and any provisions in the subdivision agreement. The Control Architect is not responsible in any way for examining or approving site (lotting) plans or working drawings with respect to any zoning or building code or permit matter or that any house can be properly built or located on its lot.

This is to certify that these plans comply with the applicable Architectural Design Guidelines approved by the Town of BRADFORD / WEST GWILLIMBURY.

| no. | description | date | by |
|---|---|---|---|
| 1 | ISSUED FOR CLIENT REVIEW | 14-08-30 | LM |
| 2 | REVISED AS PER ENG'S COMMENTS | APR 30-15 | RC |
| 3 | | | |
| 4 | | | |
| 5 | | | |
| 6 | | | |
| 7 | | | |
| 8 | | | |
| 9 | | | |

The undersigned has reviewed and takes responsibility for this design and has the qualifications and meets the requirements set out in the Ontario Building Code to be a Designer.

qualification information
Wellington Jno-Baptiste — signature — BCIN 25591
registration information
VA3 Design Inc. — 42658

Contractor must verify all dimensions on the job and report any discrepancy to the Designer before proceeding with the work. All drawings and specifications are instruments of service and the property of the Designer which must be returned at the completion of the work. Drawings are not to be scaled.

VA3 DESIGN
300A Wilson Avenue
Toronto ON M3H 1S8
t 416.630.2255 f 416.630.4782
va3design.com

project name: BAYVIEW WELLINGTON
GREEN VALLEY ESTATES
municipality: BRADFORD, ON.
UPGRADED REAR ELEV. 'B' (W.O.B. CONDITION)
date: 2014-04
drawn by: LM
checked by: -
scale: 3/16" = 1'-0"
file name: 13045-S42-3
S42-3
RIDEAU 3
project no. 13045
drawing no. 38

RICHARD – H:\ARCHIVE\WORKING\2013\13045.BW\units\42\13045-S42-3.dwg – Wed – Jun 3 2015 – 10:37 AM

All drawings specifications, related documents and design are the copyright property of VA3 DESIGN. Reproduction of this property in whole or in part is strictly prohibited without VA3 DESIGN's written permission.

## UNINSULATED OPENINGS (PER OBC. SB-12,2.1.1.(7)

| S42-3 ELEVATION C W.O.B. | ENERGY EFFICIENCY – OBC SB12 | | |
|---|---|---|---|
| ELEVATION | WALL AREA S.F. | OPENING S.F. | PERCENTAGE |
| FRONT | 684.00 S.F. | 94.33 S.F. | 13.79 % |
| LEFT SIDE | 1050.00 S.F. | 91.78 S.F. | 8.74 % |
| RIGHT SIDE | 1050.00 S.F. | 95.94 S.F. | 9.14 % |
| REAR | 908.00 S.F. | 158.67 S.F. | 17.47 % |
| TOTAL SQ. FT. | 3692.00 S.F. | 440.72 S.F. | 11.94 % |
| TOTAL SQ. M. | 343.00 S.M. | 40.94 S.M. | 11.94 % |

It is the builder's complete responsibility to ensure that all plans submitted for approval fully comply with the Architectural Guidelines and all applicable regulations and requirements including zoning provisions and any provisions in the subdivision agreement. The Control Architect is not responsible in any way for examining or approving site (lotting) plans or working drawings with respect to any zoning or building code or permit matter or that any house can be properly built or located on its lot.

This is to certify that these plans comply with the applicable Architectural Design Guidelines approved by the Town of BRADFORD / WEST GWILLIMBURY.

# UPGRADED REAR ELEVATION 'C'– W.O.B. CONDITION

**S42-3**
RIDEAU 3

project no. 13045

# BAYVIEW WELLINGTON

municipality: BRADFORD, ON.

project name: GREEN VALLEY ESTATES

UPGRADED REAR ELEV. 'C' (W.O.B. CONDITION)

drawing no. 39

date: 2014-04 | checked by: – | scale: 3/16" = 1'-0" | file name: 13045-S42-3

drawn by: LM | RICHARD – H:\ARCHIVE\WORKING\2013\13045.BW\units\s42\13045-S42-3.dwg – Wed – Jun 3 2015 – 10:37 AM


VA3 DESIGN
300A Wilson Avenue
Toronto ON M3H 1S8
t 416.630.2255 f 416.630.4782
va3design.com


The undersigned has reviewed and takes responsibility for this design and has the qualifications and meets the requirements set out in the Ontario Building Code to be a Designer.

qualification information

name: Wellington Jno-Baptiste — BCIN: 25591

registration information: VA3 Design Inc. — 42658

signature

Contractor must verify all dimensions on the job and report any discrepancy to the Designer before proceeding with the work. All drawings and specifications are instruments of service and the property of the Designer which must be returned at the completion of the work. Drawings are not to be scaled.

| no. | description | date | by |
|---|---|---|---|
| 9 | . | . | . |
| 8 | . | . | . |
| 7 | . | . | . |
| 6 | . | . | . |
| 5 | . | . | . |
| 4 | . | . | . |
| 3 | . | . | . |
| 2 | REVISED AS PER ENG'S COMMENTS | APR. 30-15 | RC |
| 1 | ISSUED FOR CLIENT REVIEW | 14-08-30 | LM |


All drawings specifications, related documents and design are the copyright property of VA3 DESIGN. Reproduction of this property in whole or in part is strictly prohibited without VA3 DESIGN's written permission.

# CONSTRUCTION NOTES (Unless otherwise noted)

ALL CONSTRUCTION TO ADHERE TO THESE PLANS AND SPEC'S AND TO CONFORM TO THE ONTARIO BUILDING CODE AND ALL OTHER APPLICABLE CODES AND AUTHORITIES HAVING JURISDICTION. THESE REQUIREMENTS ARE TO BE TAKEN AS MINIMUM SPECIFICATIONS. ONT. REG. 332/12-2012 OBC

**1. ROOF CONSTRUCTION**
NO.210 (10.25kg/m2) ASPHALT SHINGLES, 10mm (3/8") PLYWOOD SHEATHING WITH "H" CLIPS. APPROVED WOOD TRUSSES @ 600mm (24") O.C. MAX. APPROVED EAVES PROTECTION TO EXTEND 900mm (3'-0") FROM EDGE OF ROOF AND MIN. 300mm (12") BEYOND INNER FACE OF EXTERIOR WALL, (EAVES PROTECTION NOT REQ'D FOR ROOF SLOPES 8:12 OR GREATER) 38x89 (2"x4") TRUSS BRACING @ 1830mm (6'-0") O.C. AT BOTTOM CHORD. PREFIN. ALUM. EAVESTROUGH, FASCIA, RWL & VENTED SOFFIT. PROVIDE ICE & WATER SHIELD TO ALL ROOF/WALL SURFACES SUSCEPTIBLE TO ICE DAMMING. ROOF SHEATHING TO BE FASTENED 150 (6") c/c ALONG EDGES & INTERMEDIATE SUPPORTS WHEN TRUSSES SPACED GREATER THAN 406 (16"). ATTIC VENTILATION 1:300 OF INSULATED CEILING AREA WITH MIN. 25% AT EAVES & MIN. 25% AT RIDGE (OBC 9.19.1.2.).

**2. FRAME WALL CONSTRUCTION (2"x6") (SB-12-TABLE 2.1.1.2.A)**
SIDING AS PER ELEV., 19x38 (1"x2") VERTICAL WOOD FURRING, CONTIN. SHEATHING MEMBRANE, 9.5mm (3/8") EXT. TYPE SHEATHING, 38x140 (2"x6") STUDS @ 400mm (16") O.C., INSULATION AND APPR. VAPOUR BARRIER AND APPR. CONTIN. AIR BARRIER, 13mm (1/2") INT. DRYWALL FINISH. SIDING TO BE MIN. 200mm (8") ABOVE FINISH GRADE. REFER TO OBC SB-12, TABLE 2.1.1.2.A. FOR REQUIRED MINIMUM THERMAL INSULATION.

**2A. FRAME WALL CONSTRUCTION (2"x6") (R28)**
SIDING AS PER ELEV., 19x38 (1"x2") VERTICAL WOOD FURRING, CONTIN. SHEATHING MEMBRANE, 28mm (1⅛") EXTERIOR STRUCTURAL INSULATED SHEATHING RSI 0.7 (R4) BY "BP" OR EQUAL, 38x140 (2"x6") STUDS @ 400mm (16") O.C., RSI 4.23 (R24) INSUL. AND APPR. VAPOUR BARRIER AND APPR. CONTIN. AIR BARRIER, 13mm (1/2") INT. DRYWALL FINISH.
SIDING TO BE MIN. 200mm (8") ABOVE FINISH GRADE.

**2B. FRAME WALL CONSTRUCTION (2"x4")- GARAGE WALLS**
SIDING AS PER ELEV., 19x38 (1"x2") VERTICAL WOOD FURRING, CONTIN. SHEATHING MEMBRANE, 9.5mm (3/8") EXT. TYPE SHEATHING, 38x89 (2"x4") STUDS @ 400mm (16") O.C. (MAX. HEIGHT 3000mm (9'-10"), WITH APPR. DIAGONAL WALL BRACING. SIDING TO BE MIN. 200mm (8") ABOVE FINISH GRADE.

**2C.** RESERVED

**2D. STUCCO WALL CONSTRUCTION (2"x4") -GARAGE WALLS**
STUCCO CLADDING SYSTEM CONFORMING TO O.B.C. 9.27.1.1.(2) & 9.28 THAT EMPLOY A MINIMUM 10mm AIR SPACE BEHIND THE CLADDING WITH POSITIVE DRAINAGE TO THE EXTERIOR AND APPLIED PER MANUFACTURERS SPECIFICATIONS OVER 25mm (1") MIN. EXPANDED OR EXTRUDED RIGID POLYSTYRENE ON APPROVED AIR/MOISTURE BARRIER ON 13mm (1/2") EXT. TYPE SHEATHING ON 38x89 (2"x4") STUDS @ 400 (16") O.C.. STUCCO TO BE MIN. 200 (8") ABOVE FINISH GRADE.

**2E. WALLS ADJACENT TO ATTIC SPACE - NO CLADDING**
9.5mm (3/8") EXT. TYPE SHEATHING, 38x140 (2"x6") STUDS @ 400mm (16") O.C., INSULATION AND APPR. VAPOUR BARRIER AND APPR. CONTIN. AIR BARRIER, 13mm (1/2") INTERIOR DRYWALL FINISH. MID-HEIGHT BLOCKING REQ'D. IF NO SHEATHING APPLIED. REFER TO OBC SB-12, TABLE 2.1.1.2.A. FOR REQUIRED MINIMUM THERMAL INSULATION.

**3. BRICK VENEER CONSTRUCTION (2"x6") (SB-12-TABLE 2.1.1.2.A)**
90mm (4") FACE BRICK, 25mm (1") AIR SPACE, 22x180x0.76mm (7/8"x7"x0.03") GALV. METAL TIES @ 400mm (16") O.C. HORIZONTAL 600mm (24") O.C. VERTICAL. APPROVED SHEATHING PAPER, 9.5mm (3/8") EXT. TYPE SHEATHING, 38x140 (2"x6") STUDS @ 400mm (16") O.C., INSULATION & APPR. VAPOUR BARRIER WITH APPR. CONTIN. AIR BARRIER. 13mm (1/2") INTERIOR DRYWALL FINISH. PROVIDE WEEP HOLES @ 800mm (32") O.C. BOTTOM COURSE AND OVER OPENINGS. PROVIDE BASE FLASHING UP MIN. 150mm (6") BEHIND BUILDING PAPER. REFER TO OBC SB-12, TABLE 2.1.1.2.A. FOR REQUIRED MINIMUM THERMAL INSULATION.
BRICK TO BE MIN. 150mm (6") ABOVE FINISH GRADE.

**3A. BRICK VENEER CONSTRUCTION (2"x6") (R28)**
90mm (4") FACE BRICK, 25mm (1") AIR SPACE, 22x180x0.76mm (7/8"x7"x0.03") GALV. METAL TIES @ 400mm (16") O.C. HORIZONTAL 600mm (24") O.C. VERTICAL. APPR. SHEATHING PAPER, 28mm (1⅛") EXT. STRUCT. INSULATED SHEATHING RSI 0.7 (R4) BY "BP" OR EQUAL, 38x140 (2"x6") STUDS @ 400mm (16") O.C., RSI 4.23 (R24) INSUL. & APPR. VAPOUR BARRIER WITH APPR. CONTIN. AIR BARRIER. 13mm (1/2") INT. DRYWALL FINISH. PROVIDE WEEP HOLES @ 800mm (32") O.C. BOTTOM COURSE AND OVER OPENINGS. PROVIDE BASE FLASHING UP MIN. 150mm (6") BEHIND BUILDING PAPER. BRICK TO BE MIN. 150mm (6") ABOVE FINISH GRADE.

**3B. BRICK VENEER CONSTRUCTION (2"x4")- GARAGE WALLS**
90mm (4") FACE BRICK, 25mm (1") AIR SPACE, 22x180x0.76mm (7/8"x7"x0.03") GALV. METAL TIES @ 400mm (16") O.C. HORIZONTAL 600mm (24") O.C. VERTICAL. APPR. SHEATHING PAPER, 9.5mm (3/8") EXT. TYPE SHEATHING, 38x89 (2"x4") STUDS @ 400mm (16") O.C. (MAX. HEIGHT 3000mm 9'-10") WITH APPR. DIAGONAL WALL BRACING. PROVIDE WEEP HOLES @ 800mm (32") O.C. BOTTOM COURSE AND OVER OPENINGS. PROVIDE BASE FLASHING UP MIN. 150mm (6") BEHIND BUILDING PAPER.
BRICK TO BE MIN. 150mm (6") ABOVE FINISH GRADE.

**3C. STUCCO WALL CONSTRUCTION (2"x6")**
STUCCO CLADDING SYSTEM CONFORMING TO O.B.C. 9.27.1.1.(2) & 9.28 THAT EMPLOYS A MINIMUM 10mm AIR SPACE BEHIND THE CLADDING WITH POSITIVE DRAINAGE TO THE EXTERIOR AND APPLIED PER MANUFACTURERS SPECIFICATIONS OVER 25mm (1") MIN. EXTRUDED OR EXPANDED RIGID POLYSTYRENE ON APPR. CONTIN. AIR/MOISTURE BARRIER ON 13mm (1/2") EXT. TYPE SHEATHING ON 38x140 (2"x6") STUDS @ 400mm (16") O.C., INSULATION, APPROVED VAPOUR BARRIER, 13mm (1/2") GYPSUM WALLBOARD INTERIOR FINISH. REFER TO OBC SB-12, TABLE 2.1.1.2.A. FOR REQUIRED MINIMUM THERMAL INSULATION.
STUCCO TO BE MIN. 200 (8") ABOVE FINISH GRADE.

**4. INTERIOR STUD PARTITIONS**
FOR BEARING PARTITIONS 38x89 (2"x4") @ 400mm (16") O.C. FOR 2 STOREYS AND 300mm (12") O.C. FOR 3 STOREYS, NON-BEARING PARTITIONS 38x89 (2"x4") @ 600mm (24") O.C. PROVIDE 38x89 (2"x4") BOTTOM PLATE AND 2/38x89 (2/2"x4") TOP PLATE. 13mm (1/2") INT. DRYWALL BOTH SIDES OF STUDS, PROVIDE 38x140 (2"x6") STUDS/PLATES WHERE NOTED.

**5. FOUNDATION WALL/FOOTINGS: (9.15.3, 9.15.4, 9.13.2, 9.14.2.1.(2))**
200mm (8") POURED CONC. FDTN. WALL 15MPa (2200psi) WITH BITUMENOUS DAMPPROOFING AND DRAINAGE LAYER. DRAINAGE LAYER REQ'D. WHEN BASEMENT INSUL. EXTENDS 900 (2'-11") BELOW FIN. GRADE. DRAINAGE LAYER IS NOT REQ'D. WHEN FDTN. WALL IS WATERPROOFED. MAXIMUM POUR HEIGHT 2390 (7'-10") ON 500x155 (20"x6") CONTINUOUS KEYED CONC. FTG. BRACE FDTN. WALL PRIOR TO BACKFILLING. ALL FOOTINGS SHALL REST ON NATURAL UNDISTURBED SOIL OR COMPACTED ENGINEERED FILL, WITH MIN. BEARING CAPACITY OF 150kPa OR GREATER. IF SOIL BEARING DOES NOT MEET MINIMUM CAPACITY, ENGINEERED FOOTINGS ARE REQUIRED.

| STOREYS SUPPORTED | W/ MASONRY VENEER | W/ SIDING ONLY |
|---|---|---|
| 1 | 16" WIDE x 6" DEEP | 16" WIDE x 6" DEEP |
| 2 | 20" WIDE x 6" DEEP | 20" WIDE x 6" DEEP |
| 3 | 26" WIDE x 9" DEEP | 20" WIDE x 6" DEEP |

-SEE OBC 9.15.3.
-MAXIMUM FLOOR LIVE LOAD OF 2.4kPa. (50psf.) PER FLOOR, AND MAX. LENGTH OF SUPPORTED FLOOR JOISTS IS 4.9m (16'-1").
-REFER TO SOILS REPORT FOR SOIL CONDITIONS AND BEARING CAPACITY.

**STRIP FOOTING SUPPORTING EXTERIOR WALLS (FOR W.O.B.)**
-ASSUMING MASONRY VENEER CONSTRUCTION, MAX. FLOOR LIVE LOAD OF 2.4kPa. (50psf.) PER FLOOR, AND MAX. LENGTH OF SUPPORTED FLOOR JOISTS IS 4.9m (16'-1"). THE STRIP FOOTING SIZE IS AS FOLLOWS:
2 STOREY WITH WALK-OUT BASEMENT 545x175 (22"x7")

**6. FOUNDATION DRAINAGE OBC. 9.14.2. & 9.14.3.**
100mm (4") DIA. FOUNDATION DRAINAGE TILE 150mm (6") CRUSHED STONE OVER AND AROUND DRAINAGE TILES.

**7. BASEMENT SLAB OBC. 9.3.1.6.(1)(b), 9.16.4.5.(1), 9.25.3.3.(15)**
80mm (3")MIN. 25MPa (3600psi) CONC. SLAB ON 100mm (4") COARSE GRANULAR FILL, OR 20MPa. (3000psi) CONC. WITH DAMPPROOFING BELOW SLAB. UNDER SLAB INSULATION PER SB-12. ALL SLAB JOINTS & PENETRATIONS TO BE CAULKED.

**8. EXPOSED FLOOR TO EXTERIOR (SB-12-TABLE 2.1.1.2.A)**
PROVIDE RSI 5.46 (R31) INSULATION, APPROVED VAPOUR BARRIER AND CONTINUOUS AIR BARRIER, FINISHED SOFFIT.

**9. ATTIC INSULATION (SB-12-TABLE 2.1.1.2.A) (SB-12-2.1.1.7)**
RSI 8.81 (R50) BLOWN IN ROOF INSULATION AND APPROVED VAPOUR BARRIER, 16mm (5/8") INT. DRYWALL FINISH OR APPROVED EQUAL. RSI 3.52 (R20) MIN. ABOVE INNER SURFACE OF EXTERIOR WALL

**10. ALL STAIRS/EXTERIOR STAIRS -OBC. 9.8.-**

| | |
|---|---|
| UNIFORM RISE | -5mm (1/4") MAX BETWEEN ADJACENT TREADS OR LANDINGS<br>-10mm (1/2") MAX BETWEEN TALLEST & SHORTEST RISE IN FLIGHT |
| MAX. RISE | = 200 (7-7/8") |
| MIN. RUN | = 210 (8-1/4") |
| MIN. TREAD | = 235 (9-1/4") |
| MAX. NOSING | = 25 (1") |
| MIN. HEADROOM | = 1950 (6'-5") |
| RAIL @ LANDING | = 900 (2'-11") |
| RAIL @ STAIR | = 865 (2'-10") to 965 (3'-2") |
| MIN. STAIR WIDTH | = 860 (2'-10") |
| **FOR CURVED STAIRS** | |
| MIN. RUN | = 150 (6") |
| MIN. AVG. RUN | = 200 (8") |

**HANDRAILS -OBC. 9.8.7.-**

**11.** FINISHED RAILING ON PICKETS SPACED MAXIMUM 100mm (4") BETWEEN PICKETS. CLEARANCE BETWEEN HANDRAIL AND SURFACE BEHIND IT TO BE 50 (2") MIN. HANDRAILS TO BE CONTINUOUS EXCEPT FOR NEWEL POST AT CHANGES OF DIRECTION .

**INTERIOR GUARDS -OBC. 9.8.8.-**
INTERIOR GUARDS: 900mm (2'-11") MIN. HIGH

**EXTERIOR GUARDS - OBC. 9.8.8.**
900mm (36") HIGH GUARD WHERE DISTANCE FROM PORCH TO FIN. GRADE IS LESS THAN 1800mm (71"). 1070mm (42") HIGH GUARD IS REQUIRED WHERE DISTANCE EXCEEDS 1800mm (71").

**12. SILL PLATE - OBC. 9.23.7.**
38x89 (2"x4") SILL PLATE WITH 13mm (1/2") DIA. ANCHOR BOLTS 200mm (8") LONG, EMBEDDED MIN. 100mm (4") INTO CONC. @ 2400mm (7'-10") O.C., CAULKING OR 25 (1") MIN. MINERAL WOOL BETWEEN PLATE AND TOP OF FDTN. WALL.
USE NON-SHRINK GROUT TO LEVEL SILL PLATE WHEN REQUIRED.

**13. BASEMENT INSULATION (SB-12-2.1.1.6), 9.25.2.3, 9.13.2.6)**
FOUNDATION WALLS ENCLOSING HEATED SPACE SHALL BE INSULATED FROM THE UNDERSIDE OF THE SUBFLOOR TO NOT MORE THAN 200mm (8") ABOVE THE FINISHED FLOOR & NO CLOSER THAN 50mm (2") OF THE BASEMENT SLAB. INSULATION TO HAVE APPROVED VAPOUR BARRIER. DAMPPROOF WITH BUILDING PAPER BETWEEN THE FOUNDATION WALL AND INSULATION UP TO GRADE LEVEL. NOTE: FULL HEIGHT INSULATION AT COLD CELLAR WALLS. REFER TO OBC SB-12, TABLE 2.1.1.2.A. FOR REQUIRED MINIMUM THERMAL INSULATION. AIR BARRIER TO BE SEALED TO FDTN. WALL WITH CAULKING.

**14. BEARING STUD PARTITION**
38x89 (2"x4") STUDS @ 400mm (16") O.C. 38x89 (2"x4") SILL PLATE ON DAMPPROOFING MATERIAL, 13mm (1/2") DIA. ANCHOR BOLTS 200mm (8") LONG, EMBEDDED MIN. 100mm (4") INTO CONC. @ 2400mm (7'-10") O.C. 100mm (4") HIGH CONC. CURB ON 350x155 (14"x6") CONC. FOOTING. ADD HORIZ. BLOCKING AT MID-HEIGHT IF WALL IS UNFINISHED.

**15. STEEL BASEMENT COLUMN (SEE O.B.C. 9.15.3.3)**
89mm(3-1/2") DIA x 3.0mm(0.118) SINGLE WALL TUBE TYPE 2 ADJUSTABLE STL. COL. W/ MIN. CAPACITY OF 71.2kN (16,000lbs.) AT A MAX. EXTENSION OF 2318mm (7'-7 1/2") CONFORMING TO CAN/CGSB-7.2-94, AND WITH 150x150x9.5 (6"x6"x3/8") STL. PLATE TOP & BOTTOM. 870x870x410 (34"x34"x16") CONC. FOOTING ON UNDISTURBED SOIL OR ENGINEERED FILL CAPABLE OF SUSTAINING A PRESSURE OF 150 Kpa. MINIMUM AND AS PER SOILS REPORT.

**15A. STEEL BASEMENT COLUMN (SEE O.B.C. 9.15.3.3)**
89mm(3-1/2") DIA x 4.78mm(.188) FIXED STL. COL. WITH 150x150x9.5 (6"x6"x3/8") STL. TOP & BOTTOM PLATE ON 1070x1070x460 (42"x42"x18"). CONC. FOOTING ON UNDISTURBED SOIL OR ENGINEERED FILL CAPABLE OF SUSTAINING A PRESSURE OF 150 Kpa. MIN. AND AS PER SOILS REPORT.

**15B. STEEL COLUMN**
90mm(3-1/2") DIA x 4.78mm(.188) NON-ADJUSTABLE STL. COL. TO BE ON 150x150x9.5 (6"x6"x3/8") STEEL TOP PLATE, & BOTTOM PLATE. BASE PLATE 120x250x12.5 (4 1/2"x10"x1/2") WITH 2-12mm DIA. x 300mm LONG x50mm HOOK ANCHORS (2-1/2"x12"x2") FIELD WELD COL. TO BASE PLATE.

**16.** BEAM POCKET OR 300x150 (12"x6") POURED CONC. NIB WALLS. MIN. BEARING 90mm (3-1/2")

**17.** 19x64 (1"x3") CONTINUOUS WOOD STRAPPING BOTH SIDES OF STEEL BEAM.

**18. GARAGE SLAB**
100mm (4") 32MPa (4640psi) CONC. SLAB WITH 5-8% AIR ENTRAINMENT ON OPT. 100 (4") COARSE GRANULAR FILL WITH COMPACTED SUB-BASE OR COMPACTED NATIVE FILL.
SLOPE TO FRONT.

**19. GARAGE CEILINGS/INTERIOR WALLS**
13mm (1/2") GYPSUM BOARD ON WALL AND CEILING BETWEEN HOUSE AND GARAGE. TAPE AND SEAL ALL JOINTS AIRTIGHT PER O.B.C. 9.10.9.16. REFER TO SB-12, TABLE 2.1.1.2.A. FOR REQUIRED THERMAL INSULATION.

**20.** DOOR AND FRAME GASPROOFED. DOOR EQUIPPED WITH SELF CLOSING DEVICE AND WEATHERSTRIPPING PER OBC 9.10.13.15.

**21. EXTERIOR STEP**
PRECAST CONCRETE STEP OR WOOD STEP WHERE NOT EXPOSED TO WEATHER. MAX. RISE 200mm (7-7/8") MIN. TREAD 250mm (9-1/2"). SEE OBC. 9.8.9.2., 9.8.9.3. & 9.8.10.

**22. DRYER EXHAUST (OBC-6.2.3.8.(7) & 6.2.4.11.)**
CAPPED DRYER EXHAUST VENTED TO EXTERIOR.
(USE 100mm (4") DIA. SMOOTH WALL VENT PIPE)

**23. INSULATED ATTIC ACCESS (OBC-9.19.2.1. & SB12-2.1.1.7)**
ATTIC ACCESS HATCH WITH MIN. DIMENSION OF 545x610mm (21 1/2"x24") & A MIN. AREA OF 0.32 SQ.M. (3.44 SQ.FT.) WITH WEATHERSTRIPPING. RSI 3.52 (R20) RIGID INSUL. BACKING.

**24. FIREPLACE CHIMNEYS OBC. 9.21.**
TOP OF FIREPLACE CHIMNEY SHALL BE 915mm (3'-0") ABOVE THE HIGHEST POINT AT WHICH IT COMES IN CONTACT WITH THE ROOF AND 610mm (2'-0") ABOVE THE ROOF SURFACE WITHIN A HORIZ. DISTANCE OF 3050mm (10'-0") FROM THE CHIMNEY.

**25.** LINEN CLOSET, 4 SHELVES MIN. 350mm (14") DEEP.

**26.** MECHANICAL EXHAUST FAN, VENTED TO EXTERIOR AS REQUIRED BY OBC. 9.32.3.5. & 9.32.3.10.

**27. STEEL BEARING PLATE FOR MASONRY WALLS**
280x280x16 (11"x11"x5/8") STL. PLATE FOR STL BEAMS AND 280x280x12 (11"x11"x1/2") STL. PLATE FOR WOOD BEAMS BEARING ON CONC. BLOCK PARTYWALL, ANCHORED WITH 2-19mm (3/4") x 200mm (8") LONG GALV. ANCHORS WITHIN SOLID BLOCK COURSE. LEVEL WITH NON-SHRINK GROUT.
**OR**
**SOLID WOOD BEARING FOR WOOD STUD WALLS**
SOLID BEARING TO BE AT LEAST AS WIDE AS THE SUPPORTED MEMBER. SOLID WOOD BEARING COMPRISED OF BUILT-UP WOOD STUDS TO BE CONSTRUCTED IN ACCORDANCE WITH OBC 9.17.4.2(2).

**28.** RESERVED

**29. BEARING WOOD POST (BASEMENT) (OBC 9.17.4.)**
3-38x140 (3-2"x6") BUILT-UP-POST ON METAL BASE SHOE ANCHORED TO CONC. WITH 12.7 DIA. BOLT, 610x610x300 (24"x24"x12") CONC. FOOTING.

**30. STEPPED FOOTINGS OBC 9.15.3.9.**
MIN. HORIZ. STEP = 600mm (24").
MAX. VERT. STEP = 600mm (24")

**31. SLAB ON GRADE**
MIN. 100mm (4") CONCRETE SLAB ON GRADE ON 100mm (4") COARSE GRANULAR FILL. REINFORCED WITH 6x6-W2.9xW2.9 MESH PLACED NEAR MID-DEPTH OF SLAB. CONC. STRENGTH 32 MPa (4640 psi) WITH 5-8% AIR ENTRAINMENT ON COMPACTED SUB-GRADE. REFER TO OBC SB-12, TABLE 2.1.1.2.A. FOR REQUIRED MINIMUM THERMAL INSULATION UNDER SLAB.

**32. DIRECT VENTING GAS FURNACE/ H.W.T VENT**
DIRECT VENT FURNACE TERMINAL MIN. 900mm (36") FROM A GAS REGULATOR. MIN. 300mm (12") ABOVE FIN. GRADE, FROM ALL OPENINGS, EXHAUST AND INTAKE VENTS. HRV INTAKE TO BE A MIN. OF 1830mm (6'-0") FROM ALL EXHAUST TERMINALS. REFER TO GAS UTILIZATION CODE.

**33. DIRECT VENTING GAS FIREPLACE VENT**
DIRECT VENT GAS FIREPLACE. VENT TO BE A MINIMUM 300mm (12") FROM ANY OPENING AND ABOVE FIN. GRADE. REFER TO GAS UTILIZATION CODE.

**34. SUBFLOOR, JOIST STRAPPING AND BRIDGING**
16mm (5/8") T & G SUBFLOOR ON WOOD FLOOR JOISTS. FOR CERAMIC TILE APPLICATION (* SEE OBC 9.30.6. *) 6mm (1/4") PANEL TYPE UNDERLAY UNDER RESILIENT & PARQUET FLOORING. (* SEE OBC 9.30.2.*)
FLOOR JOISTS WITH SPANS OVER 2100mm (6'-11") TO BE BRIDGED WITH 38x38 (2"x2") CROSS BRACING OR SOLID BLOCKING @ 2100mm (6'-11") O.C. MAX. AND WHERE SPECIFIED BY JOIST TABLES A-1 OR A-2 STRAPPING SHALL BE 19x64 (1"x3") @ 2100mm (6'-11") O.C. UNLESS A PANEL TYPE CEILING FINISH IS APPLIED.
(* SEE OBC 9.23.9.4. *)

**35. EXPOSED BUILDING FACE OBC. 9.10.15. & SB-2-2.3.5.(2)**
EXTERIOR WALLS TO HAVE A FIRE RESISTANCE RATING OF NOT LESS THAN 45 min. WHERE LIMITING DISTANCE (LD) IS LESS THAN 1.2M (3'-11"). WHERE THE LD IS LESS THAN 600mm (1'-11") THE EXPOSING FACE SHALL BE CLAD IN NON-COMBUSTIBLE MATERIAL. SEE ELEVATIONS FOR ADDITIONAL NOTES. OFFENDING GARAGE WALLS INCLUDED.

**36. COLD CELLAR PORCH SLAB (OBC 9.40.)**
FOR MAX. 2500mm (8'-2") PORCH DEPTH (SHORTEST DIM.), 150mm (6") 32MPa (4640psi) CONC. SLAB WITH 5-8% AIR ENTRAINMENT. REINF. WITH 10M BARS @ 200mm (7 7/8") O.C. EACH WAY IN BOTTOM THIRD OF SLAB, MIN. 30mm (1 1/4") COVER, 600x600 (23 5/8"x23 5/8") 10M DOWELS @ 600mm (23 5/8") O.C., ANCHORED IN PERIMETER FDTN. WALLS. SLOPE SLAB MIN. 1.0% FROM HOUSE WALL. SLAB TO HAVE MIN. 75mm (3") BEARING ON FDTN. WALLS. PROVIDE (L7) LINTEL OVER CELLAR DOOR WITH 100mm (4") END BEARING.

**37.** THE FDTN. WALL SHALL NOT BE REDUCED TO LESS THAN 90mm (3-1/2") THICK TO A MAX. DEPTH OF 600mm (24") AND SHALL BE TIED TO THE FACING MATERIAL WITH METAL TIES SPACED 200mm (8") O.C. VERTICALLY AND 900mm (36") O.C. HORIZONTALLY. FILL SPACE BETWEEN WALL AND FACING SOLID WITH MORTAR.

**38. CONVENTIONAL ROOF FRAMING (2.0Kpa. SNOW LOAD)**
38x140 (2"x6") RAFTERS @ 400mm (16"O.C.) FOR MAX 11'-7" SPAN, 38x184 (2"x8") RIDGE BOARD. 38x89 (2"x4") COLLAR TIES AT MIDSPANS. CEILING JOISTS TO BE 38x89 (2"x4") @ 400mm (16") O.C. FOR MAX. 2830mm (9'-3") SPAN & 38x140 (2"x6") @ 400 (16") O.C. FOR MAX. 4450mm (14'-7") SPAN.
RAFTERS FOR BUILT-UP ROOF TO BE 38x89 (2"x4") @ 600mm (24") O.C. WITH A 38x89 (2"x4") CENTRE POST TO THE TRUSS BELOW, LATERALLY BRACED @ 1800mm (6'-0") O.C. VERTICALLY.

## GENERAL NOTES

**WINDOWS:**
1) MINIMUM BEDROOM WINDOW -OBC. 9.9.10.1.-
AT LEAST ONE BEDROOM WINDOW ON A GIVEN FLOOR IS TO HAVE MIN. 0.35m2 UNOBSTRUCTED GLAZED OR OPENABLE AREA WITH MIN. CLEAR WIDTH OF 380 mm (1'-3").
2) WINDOW GUARDS -OBC. 9.8.8.1.(6).
A GUARD IS REQUIRED WHERE THE TOP OF THE WINDOW SILL IS LOCATED LESS THAN 480mm (1'-7") ABOVE FIN. FLOOR AND THE DISTANCE FROM THE FIN. FLOOR TO THE ADJACENT GRADE IS GREATER THAN 1800mm (5'-11")
3) EXTERIOR WINDOWS
SHALL COMPLY WITH OBC DIV.-B 9.7.3. & SB12-2.1.1.8

**GENERAL:**
1) MECHANICAL VENTILATION IS REQUIRED TO COMPLY WITH OBC-DIV. B, 6.2.2. SEE MECHANICAL DRAWINGS.
2) ALL DOWNSPOUTS TO DRAIN AWAY FROM THE BUILDING AS PER OBC 9.26.18.2. & 5.6.2.2.(3) AND MUNICIPAL STANDARDS.
3) ALL WINDOW WELLS TO DRAIN TO FOOTING LEVEL PER OBC 9.14.6.3. CHECK WITH THE LOCAL AUTHORITY.
4) STUD WALL REINFORCEMENT FOR FUTURE GRAB BARS IN MAIN BATHROOM
REINFORCEMENT OF STUD WALLS SHALL BE INSTALLED ADJACENT TO WATER CLOSETS AND SHOWER OR BATHTUB IN MAIN BATHROOM. REFER TO OBC. 9.5.2.3, 3.8.3.8.(1)(d) & 3.8.3.13.(1)(f). SEE DETAIL.
5) ALL EXTERIOR DOORS TO COMPLY WITH THERMAL RESISTANCE AS STATED IN O.B.C. SB-12-2.1.1.9.
6) ALL AIR BARRIER SYSTEMS ARE REQUIRED TO COMPLY WITH O.B.C. DIV.-B 9.25.3.

**LUMBER:**
1) ALL LUMBER SHALL BE SPRUCE NO.2 GRADE, UNLESS NOTED OTHERWISE.
2) STUDS SHALL BE STUD GRADE SPRUCE, UNLESS NOTED OTHERWISE.
3) LUMBER EXPOSED TO THE EXTERIOR TO BE SPRUCE No.2 GRADE PRESSURE TREATED OR CEDAR, UNLESS NOTED OTHERWISE.
4) ALL LAMINATED VENEER LUMBER (L.V.L.) BEAMS, GIRDER TRUSSES, AND METAL HANGER CONNECTIONS SUPPORTING ROOF FRAMING TO BE DESIGNED & CERTIFIED BY TRUSS MANUFACTURER.
5) LVL BEAMS SHALL BE 2.0E -2950Fb MIN.. NAIL EACH PLY OF LVL WITH 89mm (3 1/2") LONG COMMON WIRE NAILS @ 300mm (12") O.C. STAGGERED IN 2 ROWS FOR 184, 240 & 300mm (7 1/4",9 1/2", 11 7/8") DEPTHS AND STAGGERED IN 3 ROWS FOR GREATER DEPTHS AND FOR 4 PLY MEMBERS ADD 13mm (1/2") DIA. GALVANIZED BOLTS BOLTED AT MID-DEPTH OF BEAM @ 915mm (3'-0") O.C.
6) PROVIDE FACE MOUNT BEAM HANGERS TYPE "SCL" MANUFACTURED BY SIMPSON STRONG-TIE OR EQUAL FOR ALL LVL BEAM TO BEAM CONNECTIONS UNLESS OTHERWISE NOTED. REFER TO ENG. FLOOR LAYOUTS.
7) JOIST HANGERS: PROVIDE METAL HANGERS FOR ALL JOISTS AND BUILT-UP WOOD MEMBERS INTERSECTING FLUSH BUILT-UP WOOD MEMBERS.
8) WOOD FRAMING NOT TREATED WITH A WOOD PRESERVATIVE, IN CONTACT WITH CONCRETE, SHALL BE SEPARATED FROM THE CONCRETE BY AT LEAST 2 mil. POLYETHYLENE FILM, No. 50 (45lbs.) ROLL ROOFING OR OTHER DAMPPROOFING MATERIAL, EXCEPT WHERE THE WOOD MEMBER IS AT LEAST 150mm (6") ABOVE THE GROUND.

**STEEL:**
1) STRUCTURAL STEEL SHALL CONFORM TO CAN/CSA-G40-21 GRADE 300W. HOLLOW STRUCTURAL SECTIONS SHALL CONFORM TO CSA-G40.21 GRADE 350W "STRUCTURAL QUALITY STEEL". OBC. B-9.23.4.3.
2) REINFORCING STEEL SHALL CONFORM TO CSA-G30-18M GRADE 400R.

**STUCCO:**
1) ALL STUCCO WALLS TO HAVE A MINIMUM 10mm AIR SPACE BEHIND THE CLADDING WITH POSITIVE DRAINAGE TO THE EXTERIOR. THE EXTERIOR SHEATHING MUST NOT BE GYPSUM BASED. ALL STUCCO TO BE INSTALLED AS PER MANUFACTURERS SPECIFICATIONS.

## LEGEND

| | |
|---|---|
| CLASS 'B' VENT | EXHAUST FAN TO EXTERIOR |
| DUPLEX OUTLET (12" ABOVE SURFACE) | 42" DUPLEX OUTLET (HEIGHT A.F.F) |
| WP WEATHERPROOF DUPLEX OUTLET | 42" GFI GFI DUPLEX OUTLET (HEIGHT A.F.F) |
| PL POT LIGHT | HEAVY DUTY OUTLET (220 volt) |
| PC LIGHT FIXTURE (PULL CHAIN) | LIGHT FIXTURE (CEILING MOUNTED) |
| SWITCH | LIGHT FIXTURE (WALL MOUNTED) |
| FD FLOOR DRAIN | HB HOSE BIB (NON-FREEZE) |

| | |
|---|---|
| SJ | SINGLE JOIST |
| DJ | DOUBLE JOIST |
| TJ | TRIPLE JOIST |
| LVL | LAMINATED VENEER LUMBER |
| PL | POINT LOAD FROM ABOVE |
| P.T. | PRESSURE TREATED LUMBER |
| G.T. | GIRDER TRUSS BY ROOF TRUSS MANUF. |
| F.A. | FLAT ARCH |
| C.A. | CURVED ARCH |
| M.C. | MEDICINE CABINET (RECESSED) |
| | CONC. BLOCK WALL |
| | DOUBLE VOLUME WALL SEE NOTE 39. |
| SB | SOLID WOOD BEARING (SPRUCE No. 2). SOLID BEARING TO BE AS WIDE AS SUPPORTED MEMBER OR AS DIRECTED BY STRUCTURAL ENGINEER. SOLID BEARING TO BE MINIMUM 2 PIECES. |
| SBFA | SOLID WOOD BEARING TO MATCH FROM ABOVE |

CONTRACTOR MUST VERIFY ALL DIMENSIONS ON THE JOB AND REPORT ANY DISCREPANCY TO VA3 DESIGN BEFORE PROCEEDING WITH THE WORK. ALL DRAWINGS AND SPECIFICATIONS ARE INSTRUMENTS OF SERVICE AND THE PROPERTY OF VA3 DESIGN WHICH IF REQUESTED MUST BE RETURNED AT THE COMPLETION OF THE WORK. ALL DRAWINGS TO BE USED FOR CONSTRUCTION ONLY AFTER BUILDING PERMIT HAS BEEN ISSUED.

**39. TWO STOREY VOLUME SPACES**
-FOR A MAXIMUM 5490 mm (18'-0") HEIGHT AND MAXIMUM SUPPORTED ROOF TRUSS LENGTH OF 6.0m, PROVIDE 2-38x140 (2-2"x6") SPR.#2 CONTIN. STUDS @ 300mm (12") O.C. (TRIPLE UP AT EVERY THIRD DOUBLE STUD FOR BRICK WALLS) C/W 9.6 (3/8") THICK EXT. PLYWOOD SHEATHING. PROVIDE SOLID WOOD BLOCKING BETWEEN WOOD STUDS @ 1220 mm (4'-0") O.C. VERTICALLY. -FOR WALLS WITH HORIZ. DISTANCES NOT EXCEEDING 2900 mm (9'-6"), PROVIDE 38x140 (2"x6") STUDS @ 400 (16") O.C. WITH CONTINUOUS 2-38x140 (2-2"x6")TOP PLATES + 1-38x140 (1-2"x6") BOTTOM PLATE & MINIMUM OF 3-38x184 (3-2"x8") CONT. HEADER AT GRND. CEILING LEVEL TOE-NAILED & GLUED AT TOP, BOTTOM PLATES AND HEADERS.

**40.** TYPICAL 1 HOUR RATED PARTYWALL.
REFER TO DETAILS FOR TYPE AND SPECIFICATIONS.

**41. FOUNDATION WALL (W.O.D./W.O.B.)**
-FOR LATERAL SUPPORT WHERE GRADE TO T/O BASEMENT SLAB EXCEEDS 1200mm (3'-11")
FOR 200mm (8") POURED CONC. FOUNDATION WALL PROVIDE VERTICAL 38x140 (2"x6") WOOD STUDS @ 400 (16") o.c. MATCH FLOOR JOIST SPACING WHEN PARALLEL WITH FLOOR JOISTS. [RAMSET BOTTOM PLATE TO SLAB & FASTEN TOP OF WALL TO FLOOR JOIST AND ALSO TIED TO 38x84 (2"x4") @ 300 (12") o.c. KNEE WALL]. REFER TO DETAIL.

**42. EXTERIOR WALLS FOR WALK-OUT CONDITIONS**
THE EXTERIOR BASEMENT STUD WALL TO BE 38x140 (2"x6") STUDS @ 400mm (16") o.c. OR 38x89 (2"x4") STUDS @ 300mm (12")o.c.

◆ REVISED — ONT. REG. 332/12-2012 OBC Amendment O. Reg. 368/13 NOV. 13, 2014

## WOOD LINTELS AND BUILT-UP WOOD BEAMS

| | |
|---|---|
| L1 | 2/38 x 184 (2/2" x 8") SPR.#2 |
| B1 | 3/38 x 184 (3/2" x 8") SPR.#2 |
| B2 | 4/38 x 184 (4/2" x 8") SPR.#2 |
| B7 | 5/38 x 184 (5/2" x 8") SPR.#2 |
| L3 | 2/38 x 235 (2/2" x 10") SPR.#2 |
| B3 | 3/38 x 235 (3/2" x 10") SPR.#2 |
| B4 | 4/38 x 235 (4/2" x 10") SPR.#2 |
| L5 | 2/38 x 286 (2/2" x 12") SPR.#2 |
| B5 | 3/38 x 286 (3/2" x 12") SPR.#2 |
| B6 | 4/38 x 286 (4/2" x 12") SPR.#2 |

## LOOSE STEEL LINTELS

| | |
|---|---|
| L7 | 89 x 89 x 6.4L (3-1/2" x 3-1/2" x 1/4"L) |
| L8 | 89 x 89 x 7.9L (3-1/2" x 3-1/2" x 5/16"L) |
| L9 | 102 x 89 x 7.9L (4" x 3-1/2" x 5/16"L) |
| L10 | 127 x 89 x 7.9L (5" x 3-1/2" x 5/16"L) |
| L11 | 127 x 89 x 11.0L (5" x 3-1/2" x 7/16"L) |
| L12 | 152 x 102 x 11.0L (6"x 4" x 7/16"L) |
| L13 | 178 x 102 x 11.0L (7"x 4" x 7/16"L) |

## LAMINATED VENEER LUMBER (LVL) BEAMS

| | |
|---|---|
| LVL1A | 1-1 3/4"x7 1/4" (1-45x184) |
| LVL1 | 2-1 3/4"x7 1/4" (2-45x184) |
| LVL2 | 3-1 3/4"x7 1/4" (3-45x184) |
| LVL3 | 4-1 3/4"x7 1/4" (4-45x184) |
| LVL4A | 1-1 3/4"x9 1/2" (1-45x240) |
| LVL4 | 2-1 3/4"x9 1/2" (2-45x240) |
| LVL5 | 3-1 3/4"x9 1/2" (3-45x240) |
| LVL5A | 4-1 3/4"x9 1/2" (4-45x240) |
| LVL6A | 1-1 3/4"x11 7/8" (1-45x300) |
| LVL6 | 2-1 3/4"x11 7/8" (2-45x300) |
| LVL7 | 3-1 3/4"x11 7/8" (3-45x300) |
| LVL8 | 4-1 3/4"x11 7/8" (4-45x300) |

## DOOR SCHEDULE

| | | |
|---|---|---|
| 1 | EXTERIOR DOOR | 815 x 2030 x 45 (2'-8" x 6'-8" x 1-3/4") INSULATED MIN. RSI 0.7 (R4) |
| 1A | EXTERIOR DOOR | 865 x 2030 x 45 (2'-10" x 6'-8" x 1-3/4") INSULATED MIN. RSI 0.7 (R4) |
| 1B | EXTERIOR DOOR | 915 x 2030 x 45 (3'-0" x 6'-8" x 1-3/4") INSULATED MIN. RSI 0.7 (R4) |
| 1C | EXTERIOR DOOR | 915 x 2335 x 45 (3'-0" x 7'-8" x 1-3/4") INSULATED MIN. RSI 0.7 (R4) |
| 1D | EXTERIOR DOOR | 815 x 2335 x 45 (2'-8" x 7'-8" x 1-3/4") INSULATED MIN. RSI 0.7 (R4) |
| 2. | INTERIOR DOOR | 815 x 2030 x 35 (2'-8" x 6'-8" x 1-3/8") |
| 2A | EXTERIOR DOOR | 815 x 2030 x 45 (2'-8" x 6'-8" x 1-3/4") 20 MIN. RATED DOOR AND FRAME, WITH APPROVED SELF CLOSING DEVICE. INSULATED MIN. RSI 0.7 (R4) |
| 2B | EXTERIOR DOOR | 815 x 2030 x 45 (2'-8" x 6'-8" x 1-3/4") (WEATHERSTRIPPING INSTALLED) |
| 3. | INTERIOR DOOR | 760 x 2030 x 35 (2'-6" x 6'-8" x 1-3/8") |
| 3A | INTERIOR DOOR | 710 x 2030 x 35 (2'-4" x 6'-8" x 1-3/8") |
| 4. | INTERIOR DOOR | 610 x 2030 x 35 (2'-0" x 6'-8" x 1-3/8") |
| 4A | INTERIOR DOOR | 660 x 2030 x 35 (2'-2" x 6'-8" x 1-3/8") |
| 5. | INTERIOR DOOR | 460 x 2030 x 35 (1'-6" x 6'-8" x 1-3/8") |

## MECHANICAL SYMBOLS

| | |
|---|---|
| HP | HEAT PIPE |
| PL | PLUMBING (TOILET) |
| PL | PLUMBING (BATH, SINK,SHOWER) |
| WA | WARM AIR |
| RA | RETURN AIR DUCT |

**SMOKE ALARM (REFER TO OBC 9.10.19)**
SA ◆ PROVIDE 1 PER FLOOR, NEAR THE STAIRS CONNECTING THE FLOOR LEVEL AND ALSO 1 IN EACH BEDROOM NEAR HALL DOOR. ALARMS TO BE CONNECTED TO AN ELECTRICAL CIRCUIT AND INTERCONNECTED TO ACTIVATE ALL ALARMS IF 1 SOUNDS. BATTERY BACK-UP REQUIRED. SMOKE ALARMS TO INCORPORATE VISUAL SIGNALLING COMPONENT (9.10.19.3.(3)).

**CARBON MONOXIDE ALARMS (OBC 9.33.4.)**
CMD WHERE A FUEL-BURNING APPLIANCE IS INSTALLED IN A DWELLING UNIT, A CARBON MONOXIDE ALARM CONFORMING TO CAN./CSA-6.19 OR UL2034 SHALL BE INSTALLED ADJACENT TO EACH SLEEPING AREA. CARBON MONOXIDE DETECTOR(S) SHALL BE PERMANENTLY WIRED SO THAT ITS ACTIVATION WILL ACTIVATE ALL CARBON MONOXIDE DETECTORS AND BE EQUIPPED WITH AN ALARM THAT IS AUDIBLE WITHIN BEDROOMS WHEN THE INTERVENING DOORS ARE CLOSED. REFER TO MANUFACTURER FOR ADDDITIONAL REQUIREMENTS.

**SOIL GAS/ RADON CONTROL (OBC 9.1.1.7. & 9.13.4.)**
PROVIDE CONSTRUCTION TO PREVENT LEAKAGE OF SOIL GAS INTO THE BUILDING IF REQUIRED.

**REFER TO UNIT DRAWINGS OR PAGE CN-2 FOR SB-12 COMPLIANCE PACKAGE TO BE USED FOR THIS MODEL.**
**The minimum thermal performance of building envelope and equipment shall conform to the selected package unless otherwise noted.**

**2014**
VA3 REFERENCE NUMBER

| no. | description | date | by |
|---|---|---|---|
| 9 | . | . | . |
| 8 | . | . | . |
| 7 | . | . | . |
| 6 | . | . | . |
| 5 | . | . | . |
| 4 | . | . | . |
| 3 | . | . | . |
| 2 | UPDATE TO CODE | APR 16-15 | RC |
| 1 | ISSUE FOR CLIENT REVIEW | MAY 07-14 | RC |

The undersigned has reviewed and takes responsibility for this design and has the qualifications and meets the requirements set out in the Ontario Building Code to be a Designer.
qualification information
Wellington Jno-Baptiste (signature) 25591
name / signature / BCIN
registration information
VA3 Design Inc. 42658

Contractor must verify all dimensions on the job and report any discrepancy to the Designer before proceeding with the work. All drawings and specifications are instruments of service and the property of the Designer which must be returned at the completion of the work. Drawings are not to be scaled.

VA3 DESIGN
300A Wilson Avenue
Toronto ON M3H 1S8
t 416.630.2255 f 416.630.4782
va3design.com

**BAYVIEW WELLINGTON**

**CONST NOTE**

| | |
|---|---|
| project name | GREEN VALLEY ESTATES |
| municipality | BRADFORD |
| project no. | 13045 |
| date | APR 2014 |
| | CONSTRUCTION NOTES |
| drawn by | RC |
| checked by | - |
| scale | 3/16" = 1'-0" |
| file name | 13045-CONST-OBC 2015 |
| drawing no. | CN1 |

RICHARD - H:\ARCHIVE\WORKING\2013\13045.BW\units\13045-CONST-OBC 2015.dwg - Thu - Apr 16 2015 - 6:54 AM

All drawings specifications, related documents and design are the copyright property of VA3 DESIGN. Reproduction of this property in whole or in part is strictly prohibited without VA3 DESIGN's written permission.

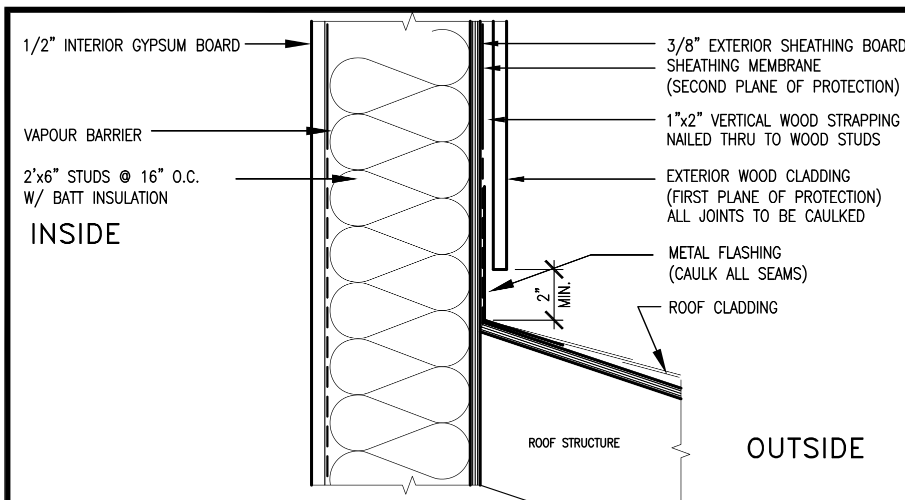


ROOF AT WALL

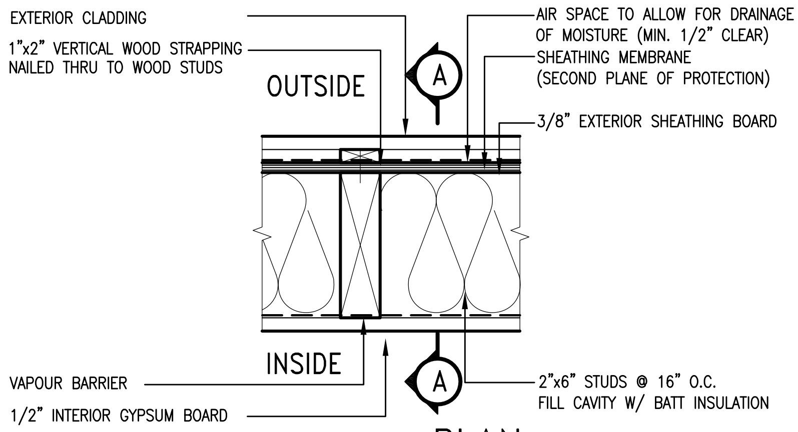


PLAN

EXTERIOR WOOD CLADDING WALL ASSEMBLY

## *STUD WALL REINFORCEMENT FOR FUTURE GRAB BARS IN MAIN BATHROOM*

*REINFORCEMENT OF STUD WALLS SHALL BE INSTALLED ADJACENT TO WATER CLOSETS AND SHOWER OR BATHTUB IN MAIN BATHROOM.*
*FUTURE GRAB BARS TO BE MOUNTED TO RESIST HORIZ. AND VERT. LOADS OF 1.3 KN (300 lb)*
*REFER TO OBC. DIV. B– 9.5.2.3.. WATER CLOSET 3.8.3.8.(3)(a) & 3.8.3.8.(3)(c).. SHOWER 3.8.3.13.(2)(f).. BATHTUB & 3.8.3.13.(4)(c). AND DETAILS PROVIDED.*

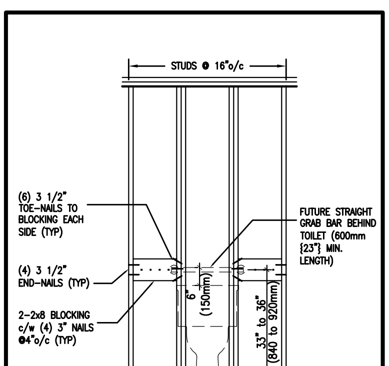


OBC. DIV.B–3.8.3.8.(3)(c)
QGB1 FUTURE GRAB BAR @ TOILET (BACK WALL)

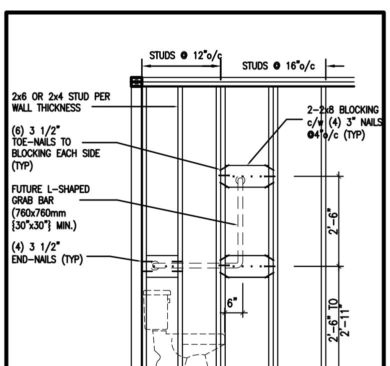


OBC. DIV.B–3.8.3.8.(3)(a)
QGB1A FUTURE L-SHAPE GRAB BAR DETAIL @ TOILET (*ONLY IF SIDE WALL PRESENT)

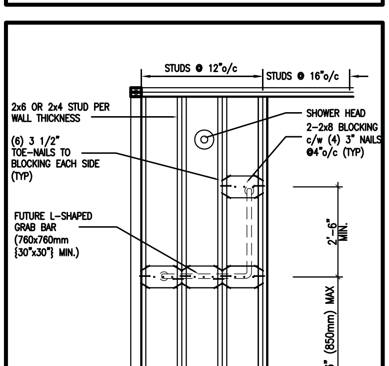


OBC. DIV.B–3.8.3.13.(2)(f)
QGB3 FUTURE L-SHAPE GRAB BAR DETAIL @ SHOWER (BACK WALL)

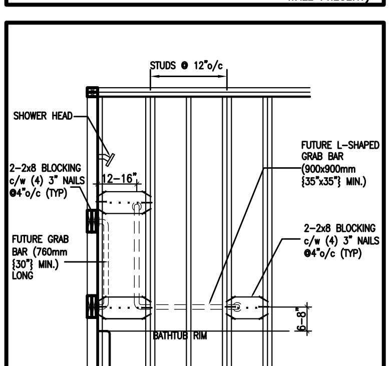


OBC. DIV.B–3.8.3.13.(4)(c)
QGB4 FUTURE GRAB BAR IN BATHTUB (SIDE VIEW)

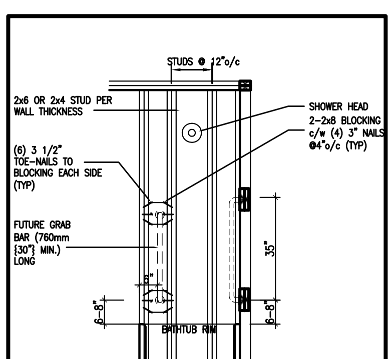


OBC. DIV.B–3.8.3.13.(2)(f)
QGB4A FUTURE GRAB BAR IN BATHTUB (VERTICAL BAR LOCATED @ EACH END WALL)

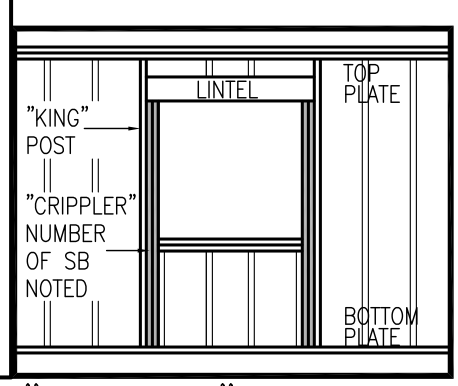


"CRIPPLE" DETAIL

MAX. HEIGHT FOR 2"x4" GARAGE WALL IS AS FOLLOW:
2"x4" @ 16" O.C. – 9–10"
2–2"x4" @ 12" O.C. – 10'–9"
3–2"x4" @ 16" O.C. – 11'–2"
3–2"x4" @ 12" O.C. – 12'–4"

NOTES:
1. FOR ROOF DESIGN SNOW LOAD OF 2.5 KPa. SUPPORTED ROOF TRUSS LENGTH OF 6.0m AND FLOOR JOIST LENGTH OF 2.5m OF ONE FLOOR.
2. PROVIDE HORIZONTAL SOLID BLOCKING @ 1200 O.C. (4'–0")
3. PROVIDE A MINIMUN OF 9.5mm (3/8") PLYWOOD OR OSB EXTERIOR SHEATHING ON THE EXTERIOR FACE.
4. FOR A 1/50 YEAR REFERENCE WIND PRESSURE OF 0.6 KPa.
5. STUDS GREATER THAN 9'–10" HIGH TO BE No. 2 SPF
6. STUD SPECIFICATION IS SUITABLE FOR BRICK VENEER OR SIDING.

** MAX. HEIGHT FOR 2"x6" EXTERIOR WALL IS AS FOLLOW:
2"x6" @ 16" O.C. – 12'–6"
2"x6" @ 12" O.C. – 13'–10"
2–2"x6" @ 16" O.C. – 15'–0"
2–2"x6" @ 12" O.C. – 17'–4"

MAX. HEIGHT FOR 2"x8" EXTERIOR WALL IS AS FOLLOWS:
2"x8" @ 16" O.C. – 16'–0"
2"x8" @ 12" O.C. – 17'–9"
2–2"x8" @ 16" O.C. – 20'–4"
2–2"x8" @ 12" O.C. – 22'–4"

NOTES:
1. FOR ROOF DESIGN SNOW LOAD OF 2.5 KPa
2. SUPPORTED ROOF TRUSS LENGTH OF 6.0m ONLY.
3. PROVIDE HORIZONTAL SOLID BLOCKING @ 1200 O.C. (4'–0")
4. PROVIDE A MINIMUM OF 9.5mm (3/8") PLYWOOD OR OSB EXTERIOR SHEATHING ON THE EXTERIOR FACE AND 12.5mm (1/2") GYPSUM BOARD ON THE INTERIOR FACE.
5. WALL FRAMING SHALL CONFORM TO OBC 9.23.10.1.(2)
6. FOR A 1/50 YEAR REFERENCE WIND PRESSURE OF 0.6 KPa
7. STUDS GREATER THAN 9'–10" HIGH TO BE No. 2 SPF.
8. STUD SPECIFICATION IS SUITABLE FOR BRICK VENEER OR SIDING.

** STUD INFORMATION TAKEN FROM OBC TABLE A–30

| no. | description | date | by |
|---|---|---|---|
| 9 | . | . | . |
| 8 | . | . | . |
| 7 | . | . | . |
| 6 | . | . | . |
| 5 | . | . | . |
| 4 | . | . | . |
| 3 | . | . | . |
| 2 | UPDATE TO CODE | APR 16–15 | RC |
| 1 | ISSUE FOR CLIENT REVIEW | MAY 07–14 | RC |

The undersigned has reviewed and takes responsibility for this design and has the qualifications and meets the requirements set out in the Ontario Building Code to be a Designer.
qualification information
Wellington Jno–Baptiste (signature) 25591
name signature BCIN
registration information
VA3 Design Inc. 42658

Contractor must verify all dimensions on the job and report any discrepancy to the Designer before proceeding with the work. All drawings and specifications are instruments of service and the property of the Designer which must be returned at the completion of the work. Drawings are not to be scaled.

VA3 DESIGN
300A Wilson Avenue
Toronto ON M3H 1S8
t 416.630.2255 f 416.630.4782
va3design.com

**BAYVIEW WELLINGTON**

**CONST NOTE**
–

project name: GREEN VALLEY ESTATES
municipality: BRADFORD
project no.: 13045
date: APR 2014
CONSTRUCTION NOTES
drawing no.: CN2
drawn by: RC
checked by: –
scale: 3/16" = 1'–0"
file name: 13045–CONST–OBC 2015
RICHARD – H:\ARCHIVE\WORKING\2013\13045.BW\units\13045–CONST–OBC 2015.dwg – Thu – Apr 16 2015 – 6:56 AM

All drawings specifications, related documents and design are the copyright property of VA3 DESIGN. Reproduction of this property in whole or in part is strictly prohibited without VA3 DESIGN's written permission.

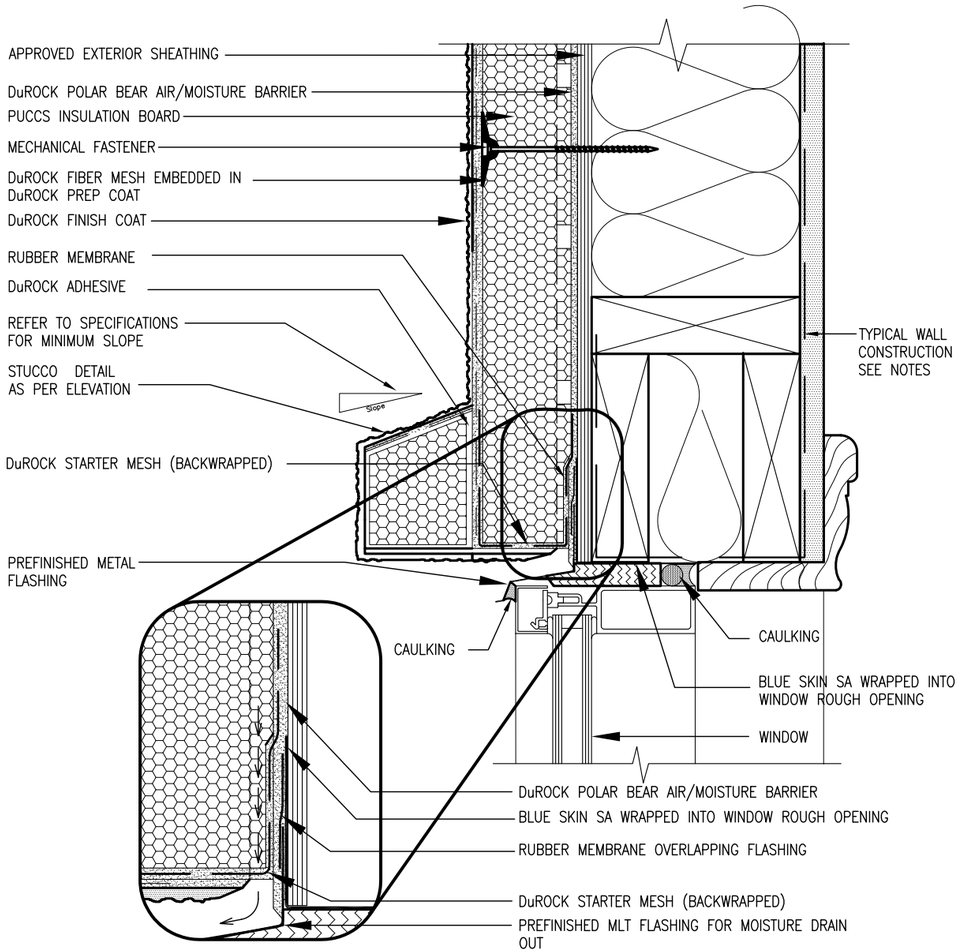


1 / CN3 WINDOW HEADER

SCALE: 3"=1'-0"

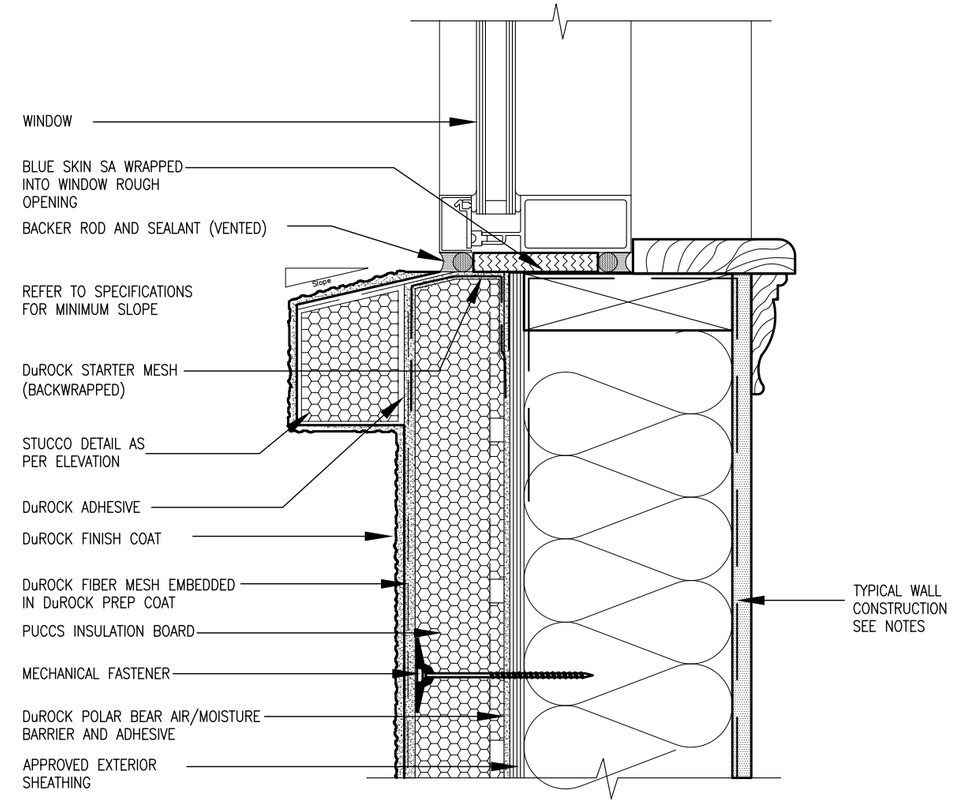


2 / CN3 WINDOW SILL

SCALE: 3"=1'-0"

ALL STUCCO WALLS TO HAVE A MINIMUM 10mm AIR SPACE BEHIND THE CLADDING WITH POSITIVE DRAINAGE TO THE EXTERIOR. THE EXTERIOR SHEATHING MUST NOT BE GYPSUM BASED. ALL STUCCO TO BE INSTALLED AS PER MANUFACTURERS SPECIFICATIONS.
DETAILS ARE BASED ON DuROCK PUCCS SYSTEM

CONST NOTE

project no. 13045

drawing no. CN3

BAYVIEW WELLINGTON

municipality BRADFORD

project name GREEN VALLEY ESTATES

CONSTRUCTION NOTES

date APR 2014 | drawn by RC | checked by - | scale 3/16" = 1'-0"

File name 13045-CONST-OBC 2015

RICHARD - H:\ARCHIVE\WORKING\2013\13045.BW\units\13045-CONST-OBC 2015.dwg - Thu - Apr 16 2015 - 6:57 AM

VA3 DESIGN
300A Wilson Avenue
Toronto ON M3H 1S8
t 416.630.2255 f 416.630.4782
va3design.com

The undersigned has reviewed and takes responsibility for this design and has the qualifications and meets the requirements set out in the Ontario Building Code to be a Designer.

qualification information
Wellington Jno-Baptiste 25591
name BCIN
registration information
VA3 Design Inc. 42658
signature

Contractor must verify all dimensions on the job and report any discrepancy to the Designer before proceeding with the work. All drawings, specifications and instruments of service are the property of the Designer which must be returned at the completion of the work. Drawings are not to be scaled.

| no. | description | date | by |
|---|---|---|---|
| 9 | . | . | . |
| 8 | . | . | . |
| 7 | . | . | . |
| 6 | . | . | . |
| 5 | . | . | . |
| 4 | . | . | . |
| 3 | . | . | . |
| 2 | UPDATE TO CODE | APR 16-15 | RC |
| 1 | ISSUE FOR CLIENT REVIEW | MAY 07-14 | RC |

All drawings specifications, recited documents and design are the copyright property of VA3 DESIGN. Reproduction of this property in whole or in part is strictly prohibited without VA3 DESIGN's written permission.

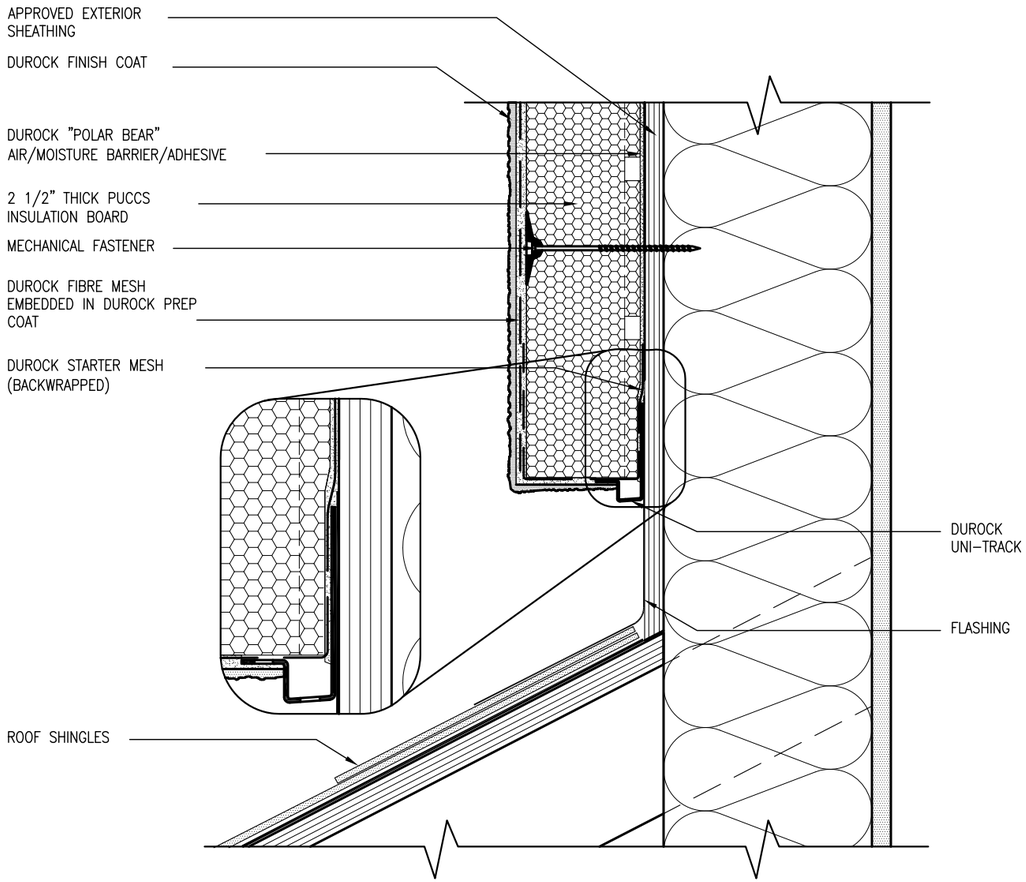


3 / CN4 STUCCO TERMINATION @ ROOF

SCALE: 3"=1'-0"

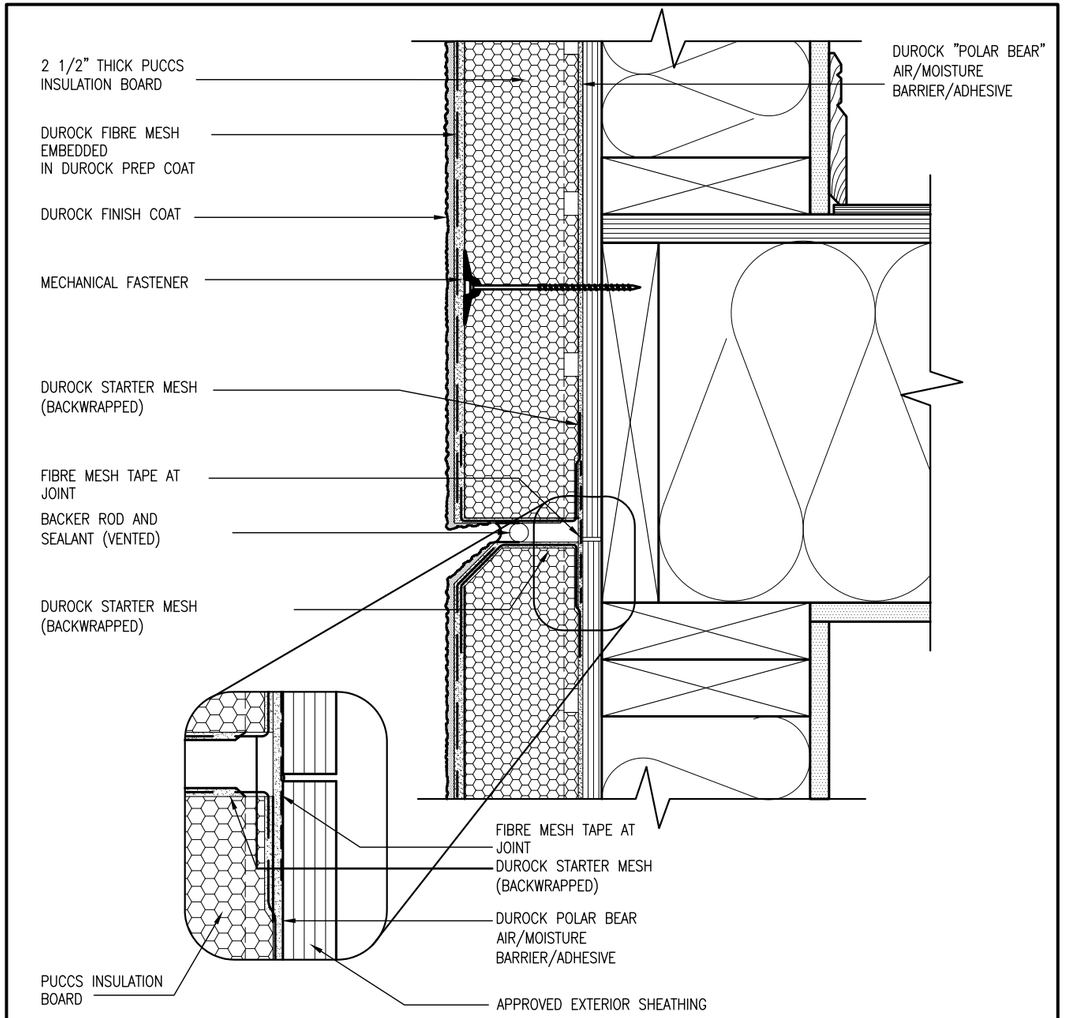


4 / CN4 HORIZONTAL EXPANSION JOINT

SCALE: 3"=1'-0"

ALL STUCCO WALLS TO HAVE A MINIMUM 10mm AIR SPACE BEHIND THE CLADDING WITH POSITIVE DRAINAGE TO THE EXTERIOR. THE EXTERIOR SHEATHING MUST NOT BE GYPSUM BASED. ALL STUCCO TO BE INSTALLED AS PER MANUFACTURERS SPECIFICATIONS.
DETAILS ARE BASED ON DuROCK PUCCS SYSTEM

CONST NOTE
-

project no. 13045

BAYVIEW WELLINGTON

municipality BRADFORD

project name GREEN VALLEY ESTATES

CONSTRUCTION NOTES

drawing no. CN4

date APR 2014 | drawn by RC | checked by - | scale 3/16" = 1'-0"

file name 13045-CONST-OBC 2015

RICHARD - H:\ARCHIVE\WORKING\2013\13045.BW\units\13045-CONST-OBC 2015.dwg - Thu - Apr 16 2015 - 6:57 AM

VA3 DESIGN
300A Wilson Avenue
Toronto ON M3H 1S8
t 416.630.2255 f 416.630.4782
va3design.com

The undersigned has reviewed and takes responsibility for this design and has the qualifications and meets the requirements set out in the Ontario Building Code to be a Designer.

qualification information
Wellington Jno-Baptiste 25591
name BCIN
registration information
VA3 Design Inc. 42658
signature

Contractor must verify all dimensions on the job and report any discrepancy to the Designer before proceeding with the work. All drawings specified are instruments of service and the property of the Designer which must be returned at the completion of the work. Drawings are not to be scaled.

| no. | description | date | by |
|---|---|---|---|
| 9 | . | . | . |
| 8 | . | . | . |
| 7 | . | . | . |
| 6 | . | . | . |
| 5 | . | . | . |
| 4 | . | . | . |
| 3 | . | . | . |
| 2 | UPDATE TO CODE | APR 16-15 | RC |
| 1 | ISSUE FOR CLIENT REVIEW | MAY 07-14 | RC |

All drawings specifications, recited documents and design are the copyright property of VA3 DESIGN. Reproduction of this property in whole or in part is strictly prohibited without VA3 DESIGN's written permission.

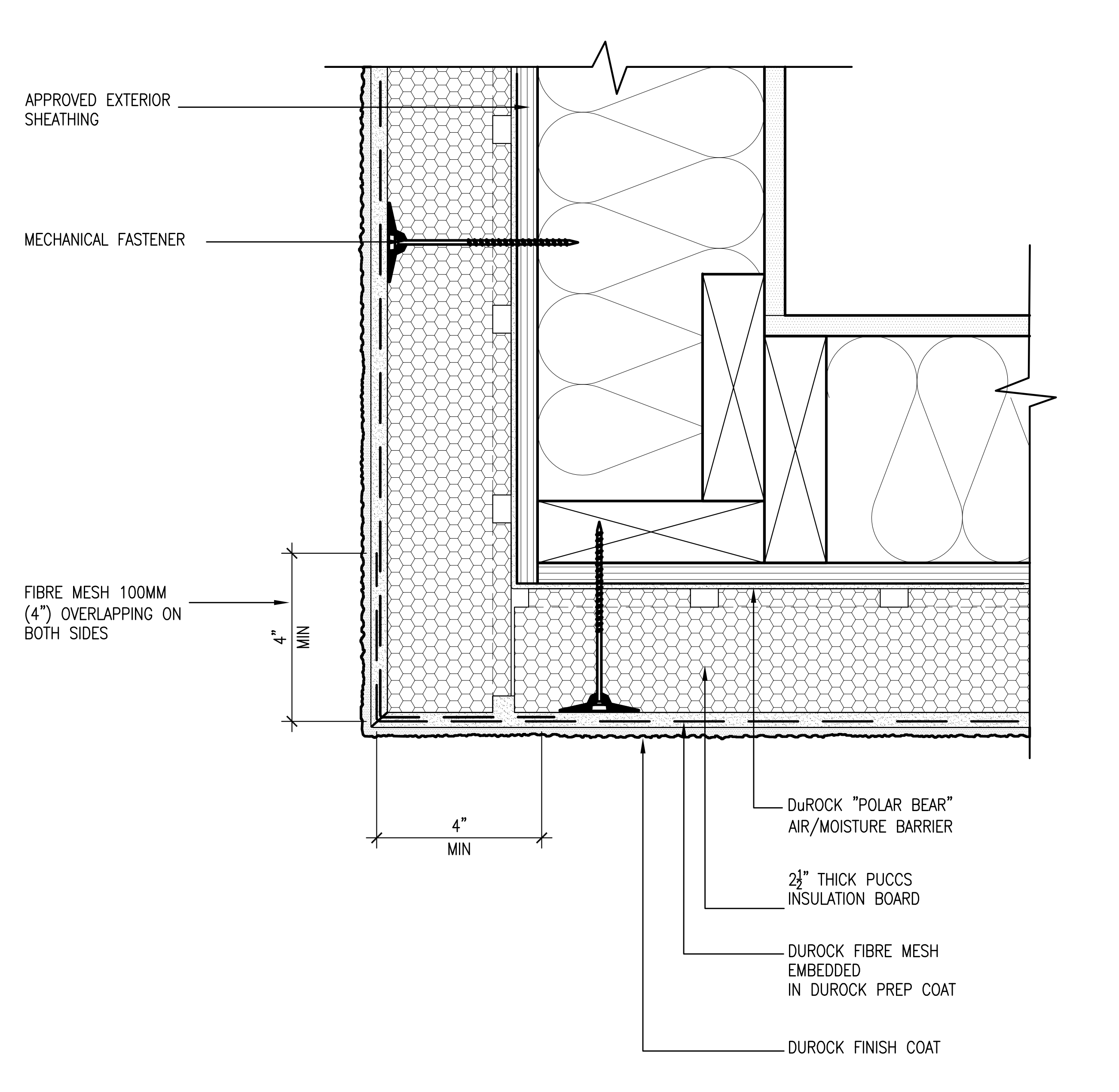


5 / CN5 CORNER DETAIL

SCALE: 3"=1'-0"

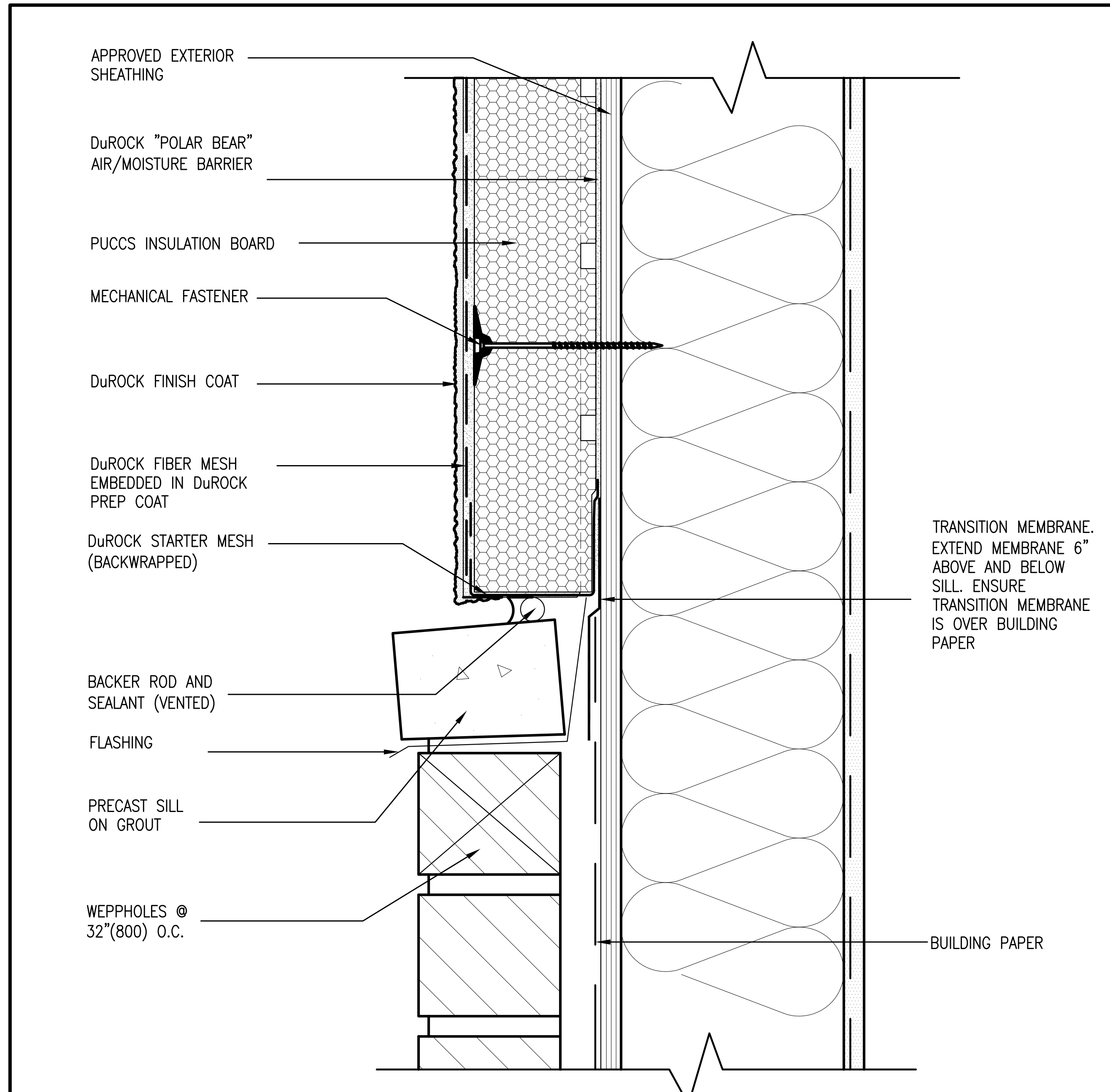


6 / CN5 STUCCO / MASONRY PLINTH CONNECTION

SCALE: 3"=1'-0"

ALL STUCCO WALLS TO HAVE A MINIMUM 10mm AIR SPACE BEHIND THE CLADDING WITH POSITIVE DRAINAGE TO THE EXTERIOR. THE EXTERIOR SHEATHING MUST NOT BE GYPSUM BASED. ALL STUCCO TO BE INSTALLED AS PER MANUFACTURERS SPECIFICATIONS.

DETAILS ARE BASED ON DuROCK PUCCS SYSTEM

| no. | description | date | by |
|---|---|---|---|
| 9 | . | . | . |
| 8 | . | . | . |
| 7 | . | . | . |
| 6 | . | . | . |
| 5 | . | . | . |
| 4 | . | . | . |
| 3 | . | . | . |
| 2 | UPDATE TO CODE | APR 16-15 | RC |
| 1 | ISSUE FOR CLIENT REVIEW | MAY 07-14 | RC |

The undersigned has reviewed and takes responsibility for this design and has the qualifications and meets the requirements set out in the Ontario Building Code to be a Designer.

qualification information
Wellington Jno-Baptiste 25591
name signature BCIN
registration information
VA3 Design Inc. 42658

Contractor must verify all dimensions on the job and report any discrepancy to the Designer before proceeding with the work. All drawings and specifications are instruments of service and the property of the Designer which must be returned at the completion of the work. Drawings are not to be scaled.


VA3 DESIGN
300A Wilson Avenue
Toronto ON M3H 1S8
t 416.630.2255 f 416.630.4782
va3design.com


project name GREEN VALLEY ESTATES
BAYVIEW WELLINGTON
municipality BRADFORD
CONST NOTE
project no. 13045
date APR 2014
drawn by RC
checked by -
scale 3/16" = 1'-0"
CONSTRUCTION NOTES
file name 13045-CONST-OBC 2015
drawing no. CN5


All drawings specifications, related documents and design are the copyright property of VA3 DESIGN. Reproduction of this property in whole or in part is strictly prohibited without VA3 DESIGN's written permission.

# SB12–COMPLIANCE PACKAGE 'J'

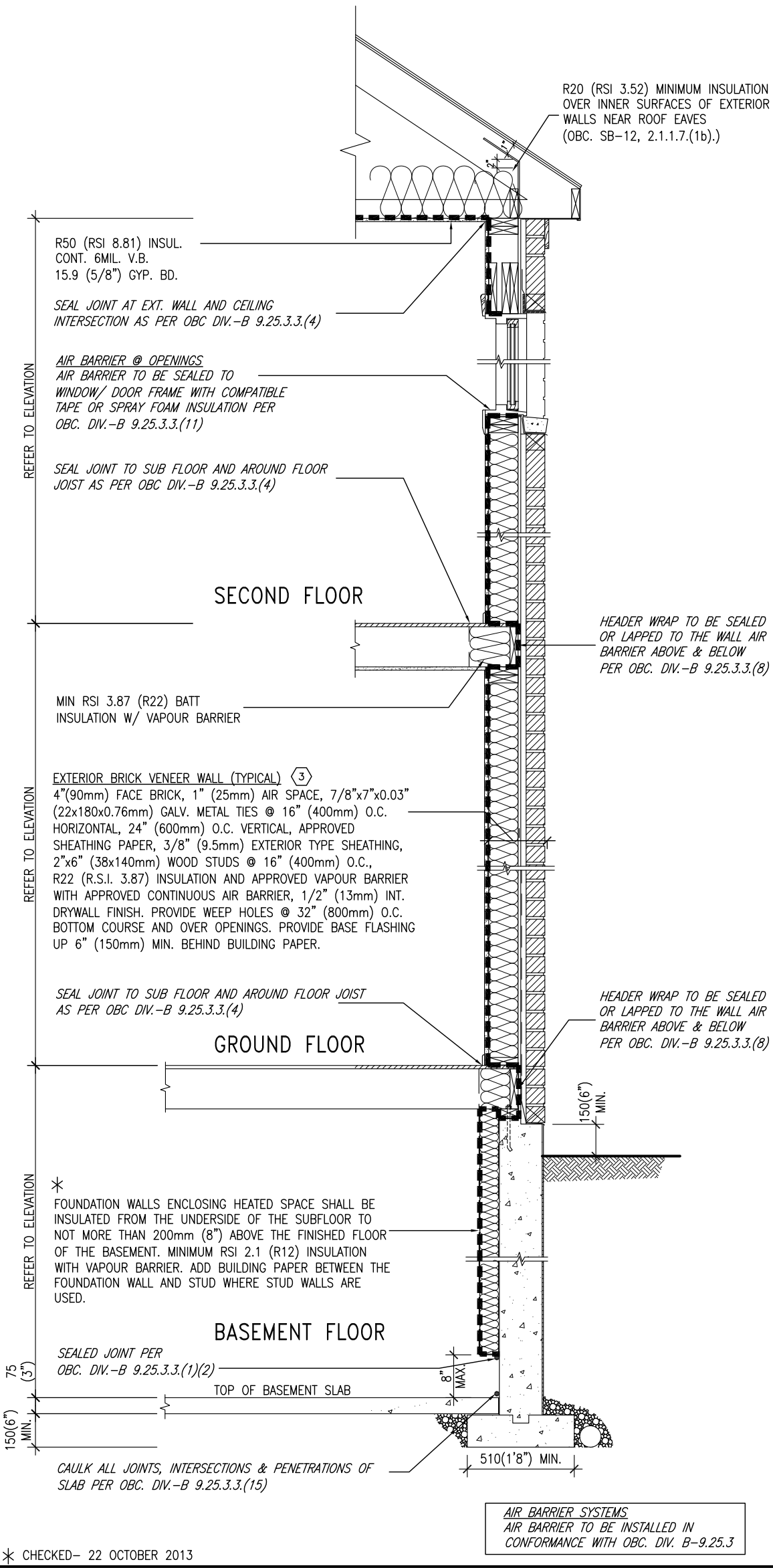


✳ CHECKED– 22 OCTOBER 2013

## EW TYPICAL EXT. WALL AIR BARRIER CONTINUITY SECTION W/ BRICK VENEER

SCALE: N.T.S.

THE MINIMAL THERMAL PERFORMANCE OF BUILDING ENVELOPE AND EQUIPMENT SHALL CONFORM TO THE FOLLOWING SB–12 COMPLIANCE PACKAGE AS PER OBC SUPPLEMENTARY STANDARD SB–12, SECTION 2.1.1.1

## USE SB–12 COMPLIANCE PACKAGE (J):

| COMPONENT | J | Notes: |
|---|---|---|
| Ceiling with Attic Space Minimum RSI (R) value | 8.81 (R50) | BLOWN –LOOSE |
| Ceiling without Attic Space Minimum RSI (R) value | 5.46 (R31) | BATT or SPRAY |
| Exposed FLoor Minimum RSI (R) value | 5.46 (R31) | BATT or SPRAY |
| Walls Above Grade Minimum RSI (R) value | 3.87 (R22) | 6" R22 BATT |
| Basement Walls Minimum RSI (R) value | 2.11 (R12) | 4" R12 BLANKET |
| Edge of Below Grade Slab ≤600mm below grade Minimum RSI (R) value | 1.76 (R10) | RIGID INSUL |
| Windows & Sliding glass Doors Maximum U–value | 1.8 | DOUBLE PANE LOW EMISSIVITY |
| Skylights Maximum U–value | 2.8 | DOUBLE PANE LOW EMISSIVITY |
| Space Heating Equipment Minimum AFUE | 94% | NATURAL GAS |
| Hot Water Heater Minimum EF | 0.67 | NATURAL GAS |
| HRV Minimum Efficiency | 60% | – |

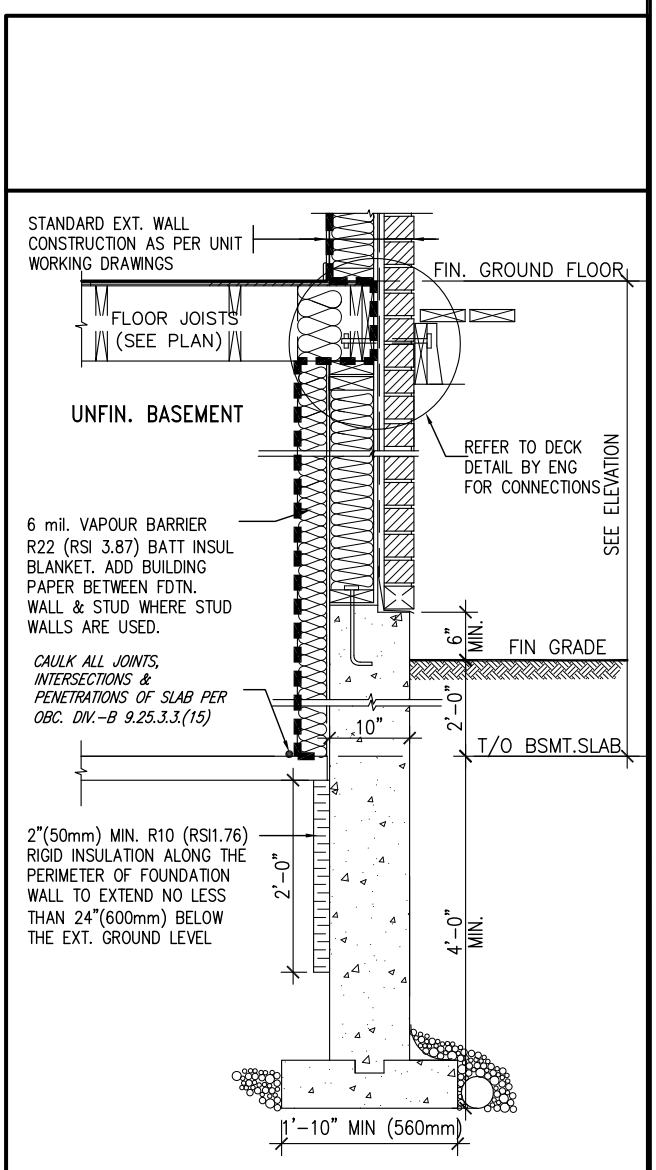


✳ REVISED– 15 MARCH 2013

## SECTION AT W.O.D/W.O.B.

# SEMI & SINGLES ONLY

| no. | description | date | by |
|---|---|---|---|
| 9 | . | . | . |
| 8 | . | . | . |
| 7 | . | . | . |
| 6 | . | . | . |
| 5 | . | . | . |
| 4 | . | . | . |
| 3 | . | . | . |
| 2 | UPDATE TO CODE | APR 16–15 | RC |
| 1 | ISSUE FOR CLIENT REVIEW | MAY 07–14 | RC |

The undersigned has reviewed and takes responsibility for this design and has the qualifications and meets the requirements set out in the Ontario Building Code to be a Designer.

qualification information
name: Wellington Jno–Baptiste — signature — BCIN 25591
registration information
VA3 Design Inc. — 42658

Contractor must verify all dimensions on the job and report any discrepancy to the Designer before proceeding with the work. All drawings and specifications are instruments of service and the property of the Designer which must be returned at the completion of the work. Drawings are not to be scaled.


VA3 DESIGN
300A Wilson Avenue
Toronto ON M3H 1S8
t 416.630.2255 f 416.630.4782
va3design.com


**BAYVIEW WELLINGTON**

project name: GREEN VALLEY ESTATES — municipality: BRADFORD

**CONST NOTE** –

project no. 13045

date: APR 2014 — CONSTRUCTION NOTES — drawing no. CN6

drawn by: RC — checked by: – — scale: 3/16" = 1'–0" — file name: 13045–CONST–OBC 2015

RICHARD – H:\ARCHIVE\WORKING\2013\13045.BW\units\13045–CONST–OBC 2015.dwg – Thu – Apr 16 2015 – 6:57 AM


All drawings specifications, related documents and design are the copyright property of VA3 DESIGN. Reproduction of this property in whole or in part is strictly prohibited without VA3 DESIGN's written permission.

# COMPLIANCE TO OBC SB-12 2.1.1.1(11)

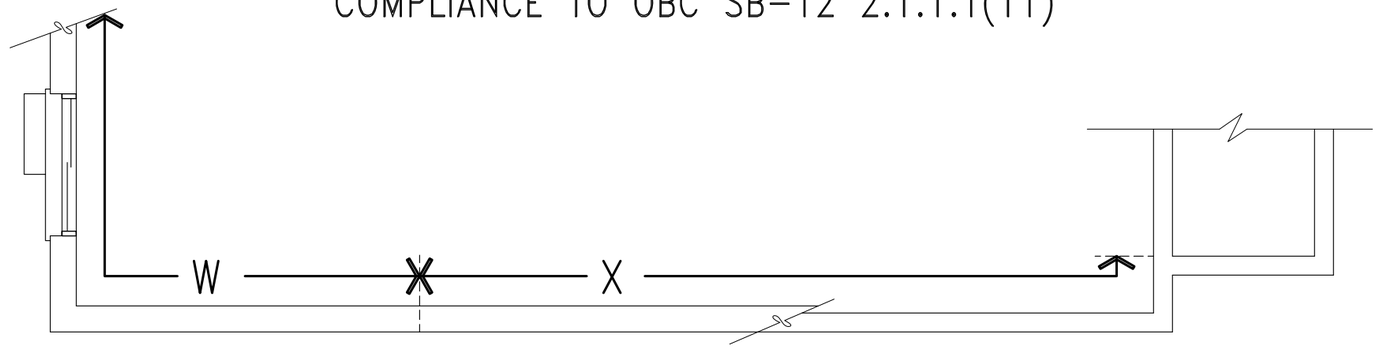


WOB PLAN

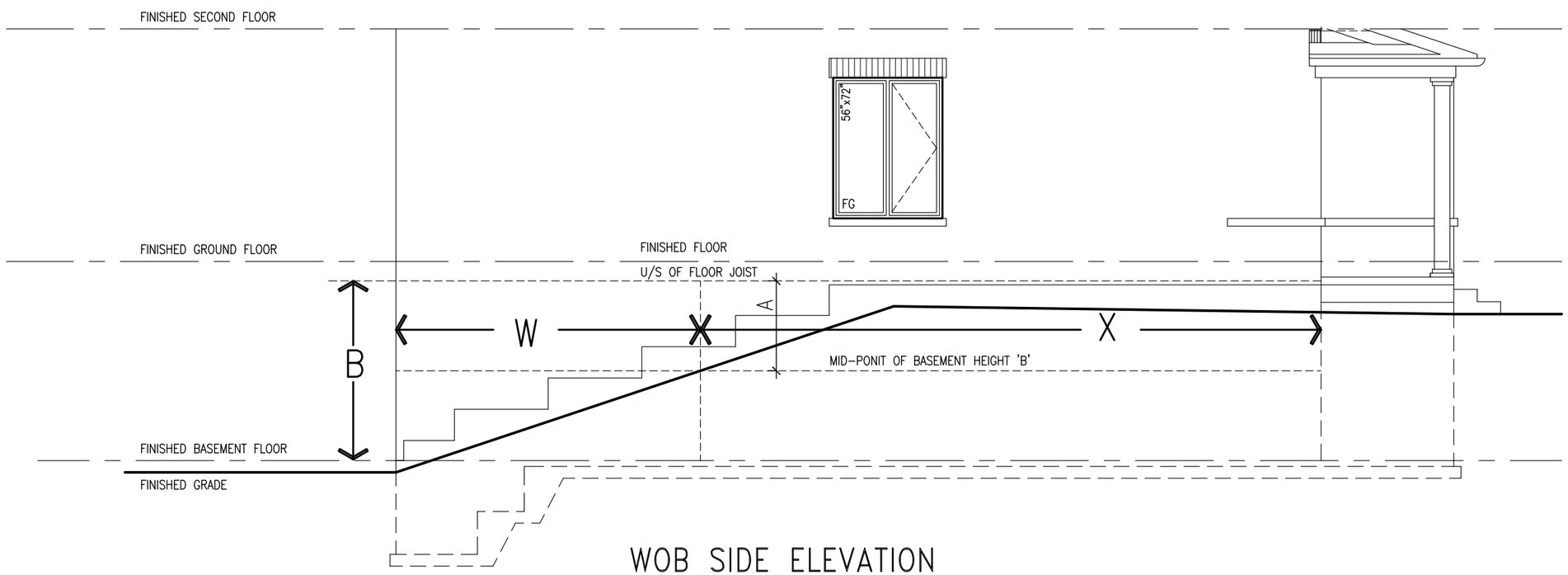


WOB SIDE ELEVATION

WHEN EXPOSED WALL "A" IS GREATER THAN 50% OF BASEMENT WALL HEIGHT "B"
INSULATION VALUE FOR WALL IN SECTION "W" IS NOT LESS THAN IS REQUIRED FOR ABOVE GRADE WALL AS REQUIRED BY TABLE 2.1.1.2A

WHEN EXPOSED WALL "A" IS LESS THAN 50% OF BASEMENT WALL HEIGHT "B"
INSULATION VALUE FOR WALL IN SECTION "X" IS NOT LESS THAN BASEMENT WALL AS REQUIRED BY TABLE 2.1.1.2A

CONST NOTE
-

project no. 13045

BAYVIEW WELLINGTON

municipality BRADFORD

project name GREEN VALLEY ESTATES

CONSTRUCTION NOTES

drawing no. CN7

date APR 2014
drawn by RC
checked by -
scale 3/16" = 1'-0"
file name 13045-CONST-OBC 2015

RICHARD - H:\ARCHIVE\WORKING\2013\13045.BW\units\13045-CONST-OBC 2015.dwg - Thu - Apr 16 2015 - 6:56 AM


VA3 DESIGN
300A Wilson Avenue
Toronto ON M3H 1S8
t 416.630.2255 f 416.630.4782
va3design.com


The undersigned has reviewed and takes responsibility for this design and has the qualifications and meets the requirements set out in the Ontario Building Code to be a Designer.

qualification information
Wellington Jno-Baptiste 25591
signature BCIN

registration information
name VA3 Design Inc. 42658

Contractor must verify all dimensions on the job and report any discrepancy to the Designer before proceeding with the work. All drawings, specifications and instruments of service are the property of the Designer which must be returned at the completion of the work. Drawings are not to be scaled.

| no. | description | date | by |
|---|---|---|---|
| 9 | - | - | - |
| 8 | - | - | - |
| 7 | - | - | - |
| 6 | - | - | - |
| 5 | - | - | - |
| 4 | - | - | - |
| 3 | - | - | - |
| 2 | UPDATE TO CODE | APR 16-15 | RC |
| 1 | ISSUE FOR CLIENT REVIEW | MAY 07-14 | RC |


All drawings specifications, recited documents and design are the copyright property of VA3 DESIGN. Reproduction of this property in whole or in part is strictly prohibited without VA3 DESIGN's written permission.

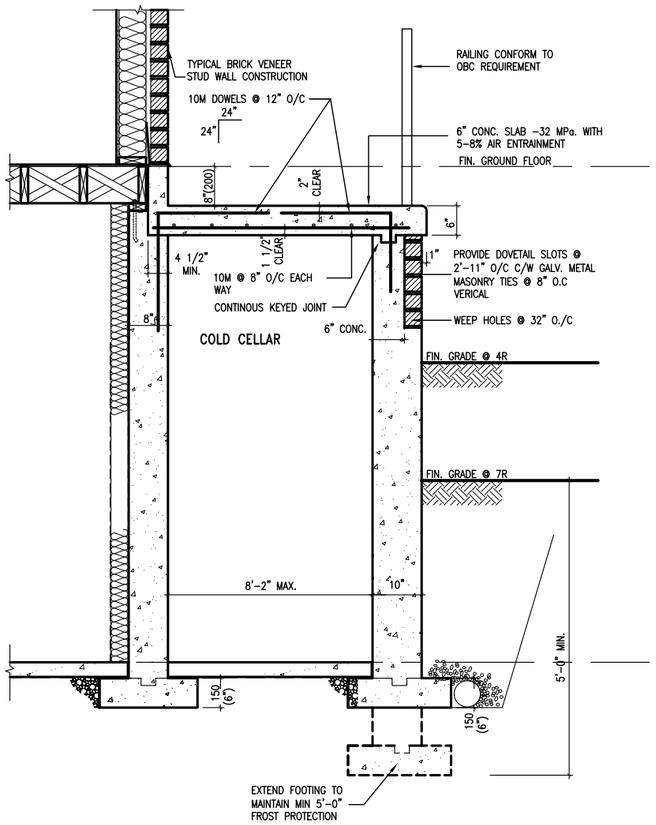


X1 SECTION AT PORCH FOR 4-7R CONDITION

SCALE: N.T.S.

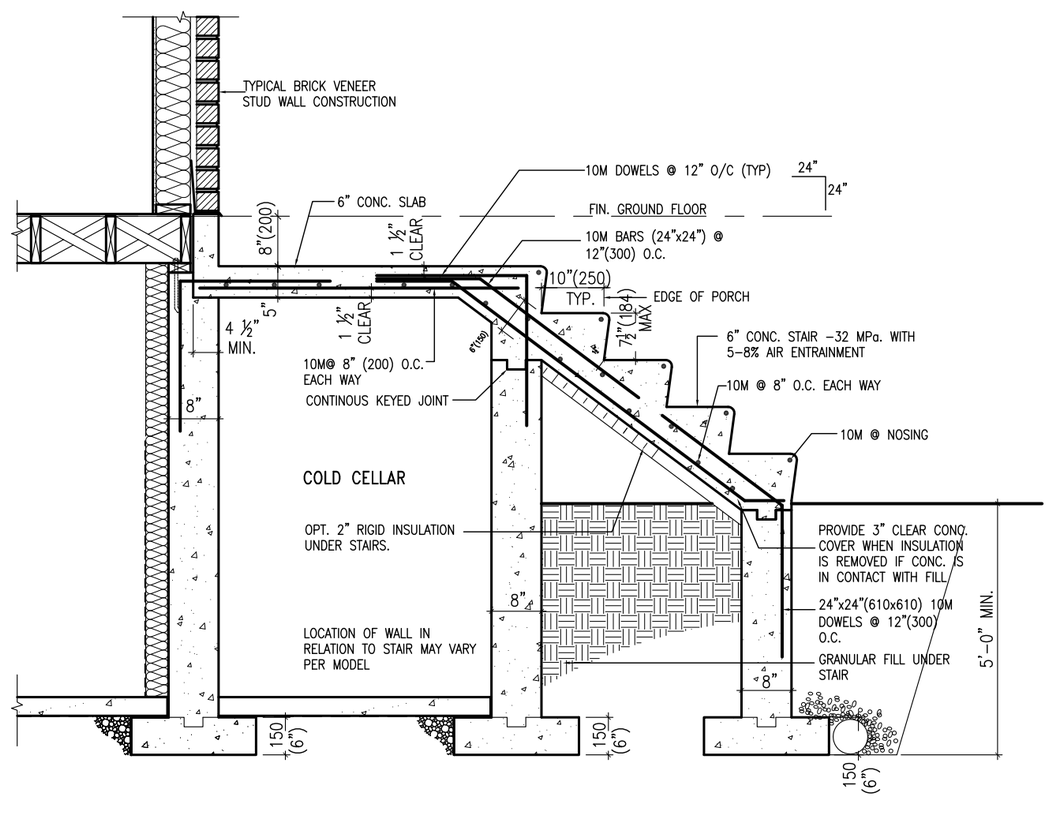


X2 EXTERIOR CONC. STAIR DETAIL (6 RISERS/ 7 RISERS SIMILAR)

SCALE: N.T.S.

# BAYVIEW WELLINGTON

municipality: BRADFORD

project name: GREEN VALLEY ESTATES

## CONST NOTE

-

project no. 13045

date: APR 2014

drawn by: RC

checked by: -

scale: 3/16" = 1'-0"

CONSTRUCTION NOTES

file name: 13045-CONST-OBC 2015

drawing no. CN8

RICHARD - H:\ARCHIVE\WORKING\2013\13045.BW\units\13045-CONST-OBC 2015.dwg - Tue - May 12 2015 - 8:51 AM

VA3 DESIGN
300A Wilson Avenue
Toronto ON M3H 1S8
t 416.630.2255 f 416.630.4782
va3design.com

The undersigned has reviewed and takes responsibility for this design and has the qualifications and meets the requirements set out in the Ontario Building Code to be a Designer.

qualification information

name: Wellington Jno-Baptiste — registration information: 25591

signature

name: VA3 Design Inc. — registration information: BCIN 42658

Contractor must verify all dimensions on the job and report any discrepancy to the Designer before proceeding with the work. All drawings or specifications or instruments of service are the property of the Designer which must be returned at the completion of the work. Drawings are not to be scaled.

| no. | description | date | by |
|---|---|---|---|
| 9 | . | . | . |
| 8 | . | . | . |
| 7 | . | . | . |
| 6 | . | . | . |
| 5 | . | . | . |
| 4 | . | . | . |
| 3 | . | . | . |
| 2 | UPDATE TO CODE | APR. 16-15 | RC |
| 1 | ISSUE FOR CLIENT REVIEW | MAY 07-14 | RC |

All drawings specifications, recited documents and design are the copyright property of VA3 DESIGN. Reproduction of this property in whole or in part is strictly prohibited without VA3 DESIGN's written permission.

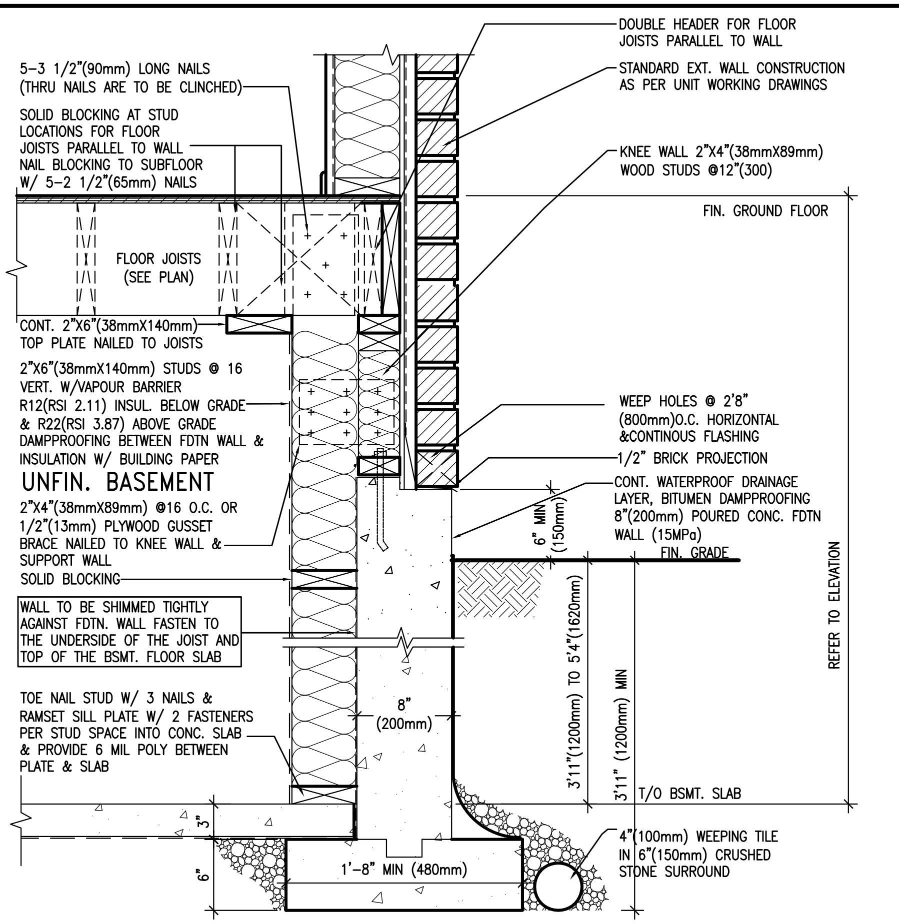


EW3.08B

WALK-OUT WALL SECTION FOR GRADE HEIGHTS BETWEEN 3'11"(1200mm) AND 5'4"(1620mm) BASEMENT SLAB TO GRADE

N.T.S.

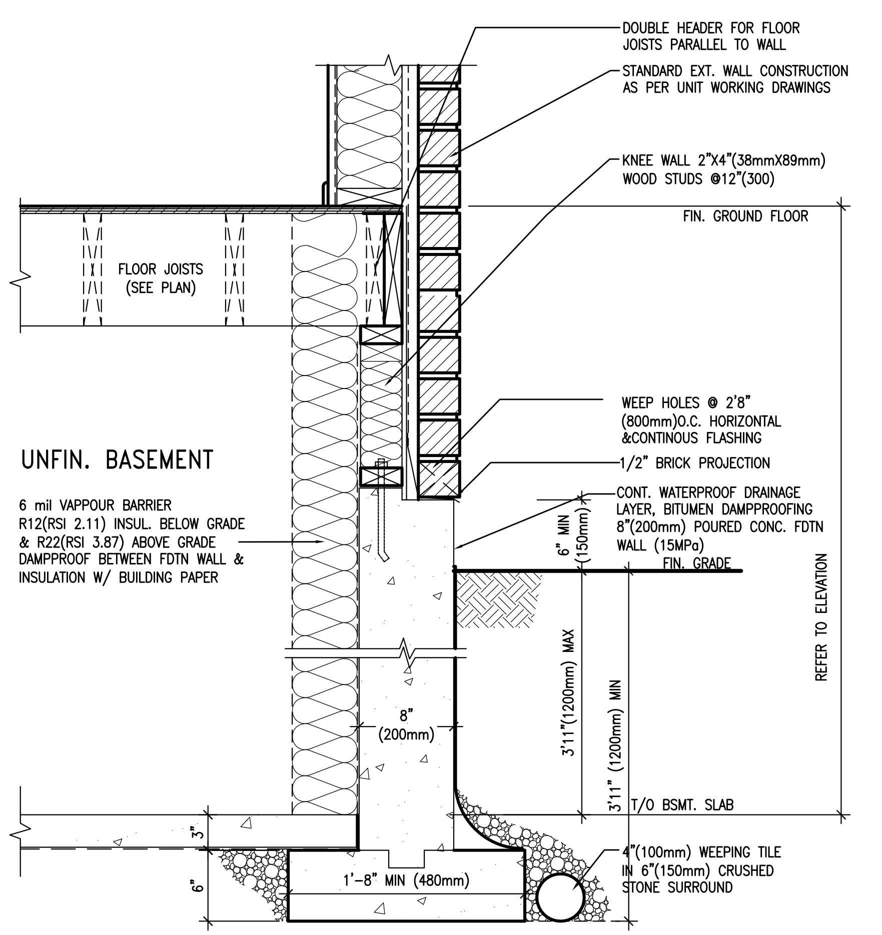


EW3.07B

WALK-OUT DECK WALL SECTION FOR GRADE TO BASEMENT SLAB 3'11"(1200mm) MAX. HEIGHT DIFFERENCE

N.T.S.

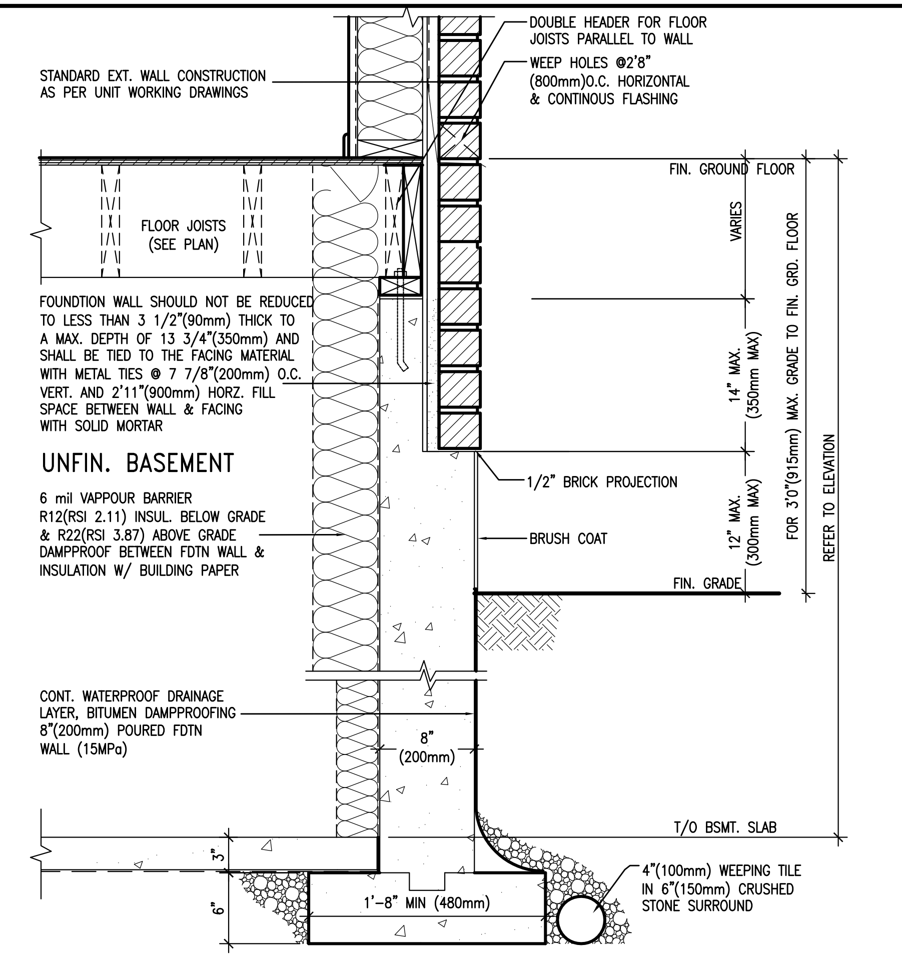


EW3.06B

WALK-OUT DECK WALL SECTION FOR GRADE TO FIN. FLOOR 3'0"(900mm) MAX. HEIGHT DIFFERENCE

N.T.S.

| no. | description | date | by |
|---|---|---|---|
| 1 | ISSUE FOR CLIENT REVIEW | MAY 07-14 | RC |
| 2 | UPDATE TO CODE | APR 16-15 | RC |
| 3 | . | . | . |
| 4 | . | . | . |
| 5 | . | . | . |
| 6 | . | . | . |
| 7 | . | . | . |
| 8 | . | . | . |
| 9 | . | . | . |

The undersigned has reviewed and takes responsibility for this design and has the qualifications and meets the requirements set out in the Ontario Building Code to be a Designer.

qualification information
Wellington Jno-Baptiste 25591
name signature BCIN

registration information
VA3 Design Inc. 42658

Contractor must verify all dimensions on the job and report any discrepancy to the Designer before proceeding with the work. All drawings and specifications are instruments of service and the property of the Designer which must be returned at the completion of the work. Drawings are not to be scaled.

VA3 DESIGN
300A Wilson Avenue
Toronto ON M3H 1S8
t 416.630.2255 f 416.630.4782
va3design.com

BAYVIEW WELLINGTON

CONST NOTE

project no. 13045

project name GREEN VALLEY ESTATES

municipality BRADFORD

date APR 2014

drawn by RC

checked by -

scale 3/16" = 1'-0"

CONSTRUCTION NOTES

drawing no. CN9

file name 13045-CONST-OBC 2015

RICHARD - H:\ARCHIVE\WORKING\2013\13045.BW\units\13045-CONST-OBC 2015.dwg - Mon - May 4 2015 - 4:04 PM

All drawings specifications, related documents and design are the copyright property of VA3 DESIGN. Reproduction of this property in whole or in part is strictly prohibited without VA3 DESIGN's written permission.

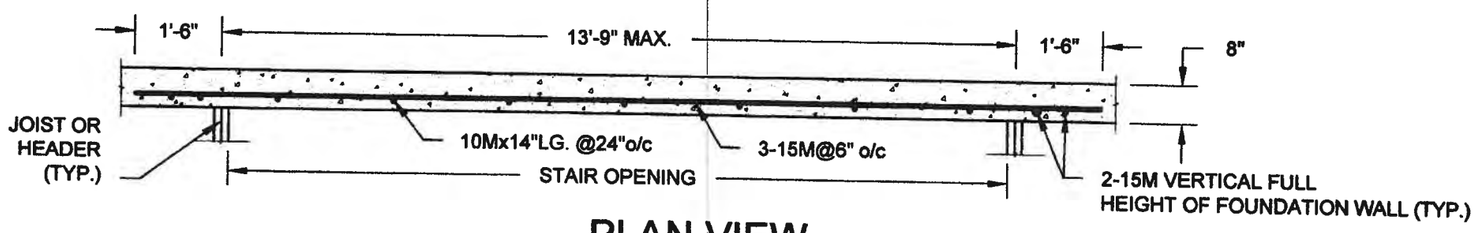


## PLAN VIEW
NOT TO SCALE

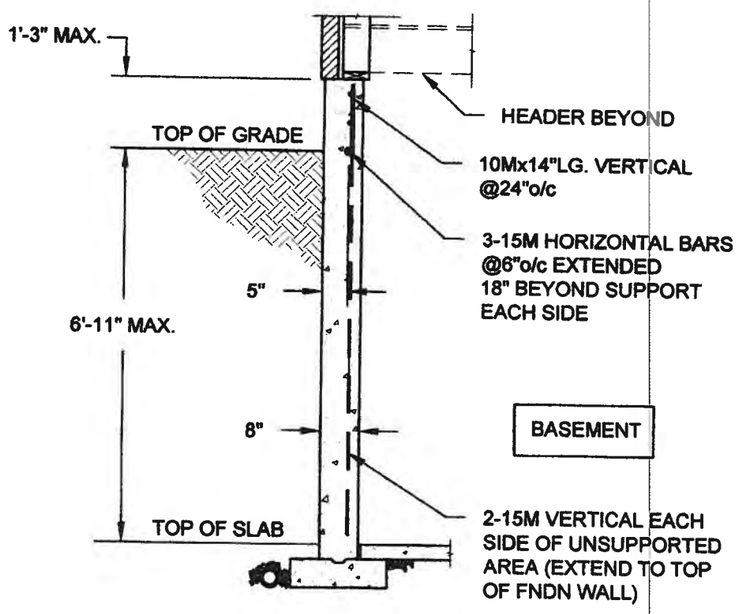


NOTE:

1. CONFORM TO ONTARIO BUILDING CODE, 2012.
2. CONCRETE COMPRESSIVE STRENGTH AT 28 DAYS TO BE 15 MPa. MIN.
3. REINFORCING STEEL TO BE GRADE 400.

## 1A / S1 LATERALLY UNSUPPORTED WALL
SCALE: 3/8" = 1'-0"

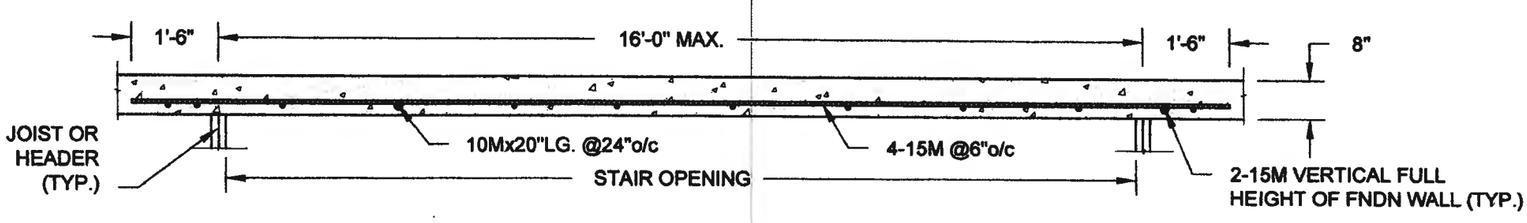


## PLAN VIEW
NOT TO SCALE

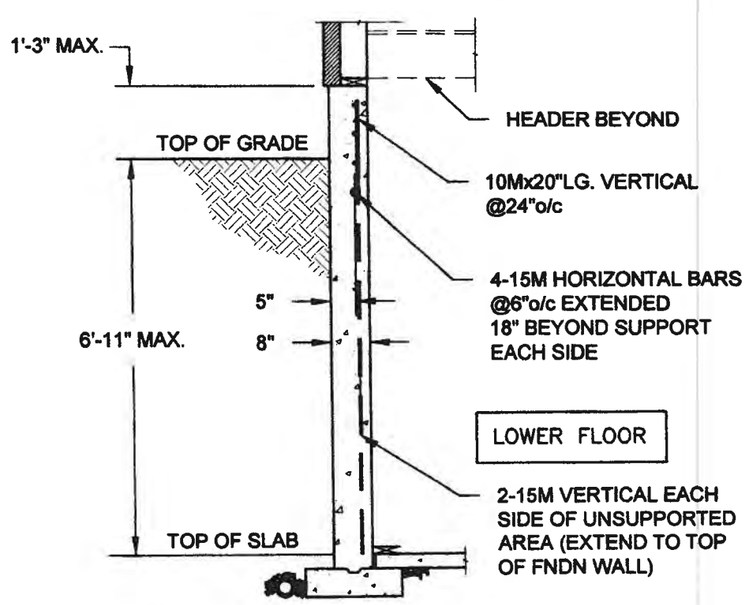


NOTE:

1. CONFORM TO ONTARIO BUILDING CODE, 2012.
2. CONCRETE COMPRESSIVE STRENGTH AT 28 DAYS TO BE 15 MPa. MIN.
3. REINFORCING STEEL TO BE GRADE 400.

## 1B / S1 LATERALLY UNSUPPORTED WALL
SCALE: 3/8" = 1'-0"

| | | | |
|---|---|---|---|
| Scale: AS NOTED | QUAILE ENGINEERING LTD. 38 Parkside Drive, UNIT 7 Newmarket, ON L3Y 8J9 T: 905-853-8547 E: quaile.eng@rogers.com | Engineer's Seal: LICENSED PROFESSIONAL ENGINEER S.J. BOYD PROVINCE OF ONTARIO MAY 27 2014 | Project: BAYVIEW WELLINGTON HOMES - GREEN VALLEY ESTATES PROJECT BRADFORD, ONTARIO |
| Date: MAY-27-2014 | | | TYPICAL STRUCTURAL DETAILS |
| Drawn: SC / Checked: SJB | | | Project No.: 14-095, 14-096, 14-097 / Drawing No.: S1 |

F:\SamC-08\2014\14-096 BAYVIEW WELLINGTON GREEN VALLEY\14-096.dwg

## FOR 9 1/2" JOIST DEPTH

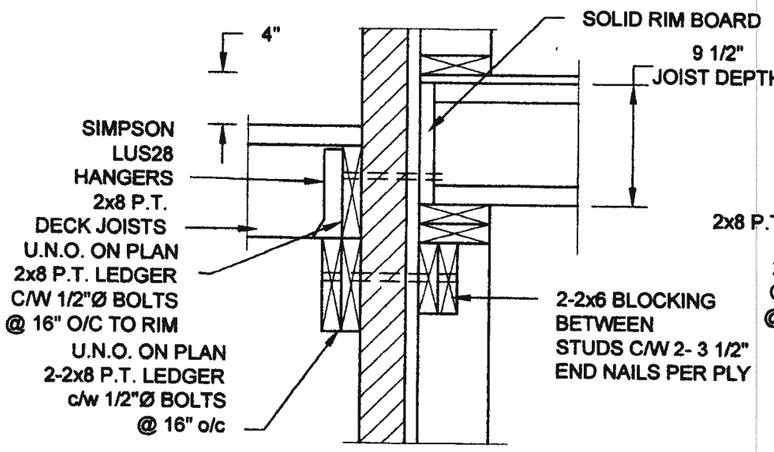


### 1A / S2 DECK FASTENING DETAIL
SCALE: 1" = 1'-0"

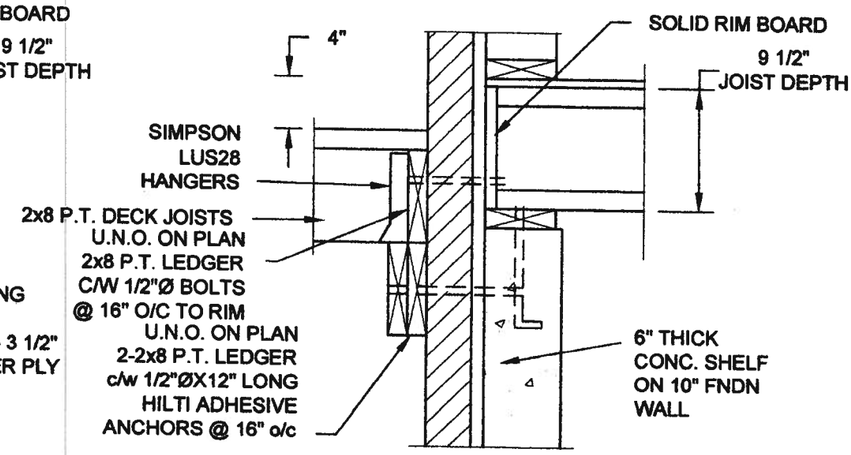


### 1B / S2 DECK FASTENING DETAIL
SCALE: 1" = 1'-0"

NOTE: 1. WHERE BACKFILL HEIGHT < 4'-7", PROVIDE 2x6 @ 16" o/c KNEEWALL ON 10" THICK CONC FNDN WALL
2. WHERE BACKFILL HEIGHT > 4'-7", PROVIDE 6" CONC SHELF FOR BRICK VENEER ON 10" THICK CONC FNDN WALL
3. FOOTING TO BE 22"x6" THICK UNLESS NOTED OTHERWISE ON PLAN.

## FOR 11 7/8" JOIST DEPTH

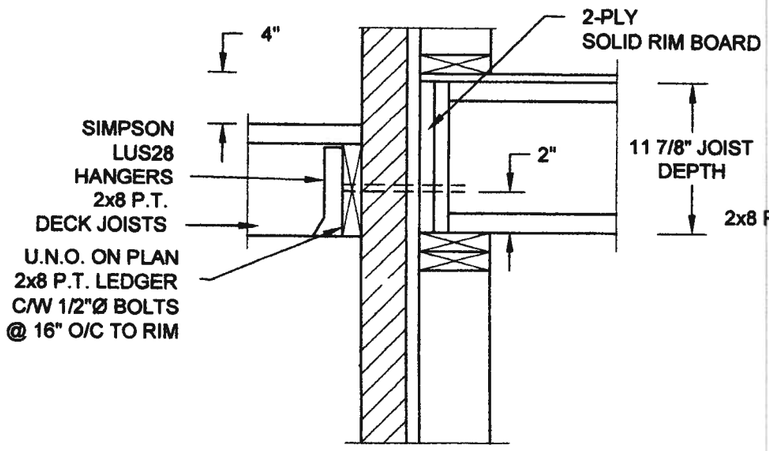


### 2A / S2 DECK FASTENING DETAIL
SCALE: 1" = 1'-0"

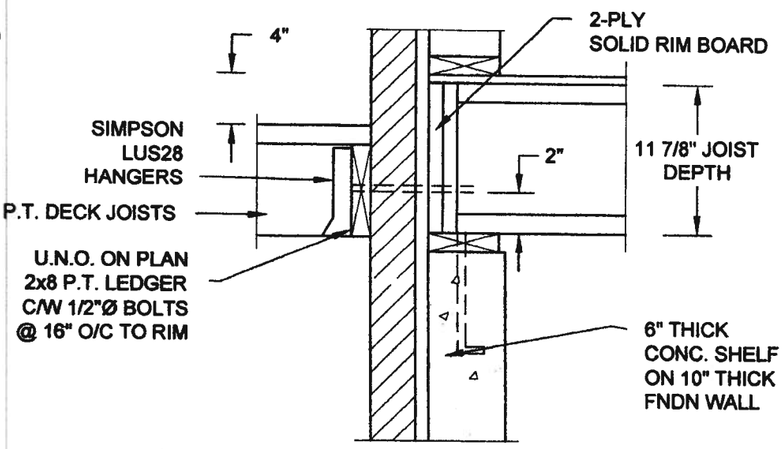


### 2B / S2 DECK FASTENING DETAIL
SCALE: 1" = 1'-0"

NOTE: 1. WHERE BACKFILL HEIGHT < 4'-7", PROVIDE 2x6 @ 16" o/c KNEEWALL ON 10" THICK CONC FNDN WALL
2. WHERE BACKFILL HEIGHT > 4'-7", PROVIDE 6" CONC SHELF FOR BRICK VENEER ON 10" THICK CONC FNDN WALL
3. FOOTING TO BE 22"x6" THICK UNLESS NOTED OTHERWISE ON PLAN.

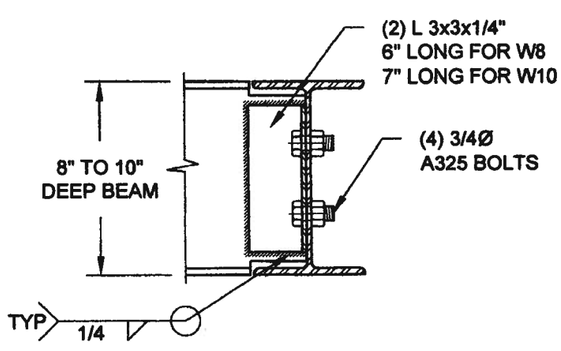


NOTE: DETAIL IS APPLICABLE TO W8x40 (W200x59) BEAM MAX AND W10x39 (W250x58) BEAM MAX.

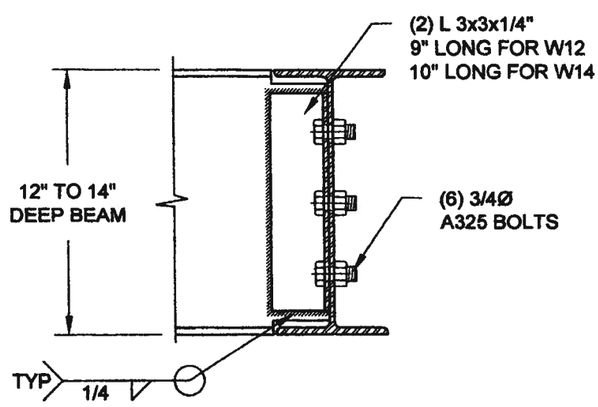


NOTE: DETAIL IS APPLICABLE TO W12x58 (W310x86) BEAM MAX AND W14x48 (W360x72) BEAM MAX.

### 3 / S2 STEEL BEAM CONNECTION DETAIL
SCALE: 1-1/2" = 1'-0"

| | | | |
|---|---|---|---|
| Scale: AS NOTED | QUAILE ENGINEERING LTD. 38 Parkside Drive, UNIT 7 Newmarket, ON L3Y 8J9 T: 905-853-8547 E: quaile.eng@rogers.com | Engineer's Seal: LICENSED PROFESSIONAL ENGINEER S.J. BOYD PROVINCE OF ONTARIO MAY 27 2014 | Project: BAYVIEW WELLINGTON HOMES - GREEN VALLEY ESTATES PROJECT BRADFORD, ONTARIO |
| Date: MAY-27-2014 | | | TYPICAL STRUCTURAL DETAILS |
| Drawn: SC / Checked: SJB | | | Project No.: 14-095, 14-096, 14-097 / Drawing No.: S2 |

F:\SamC-08\2014\14-096 BAYVIEW WELLINGTON GREEN VALLEY\14-096.dwg

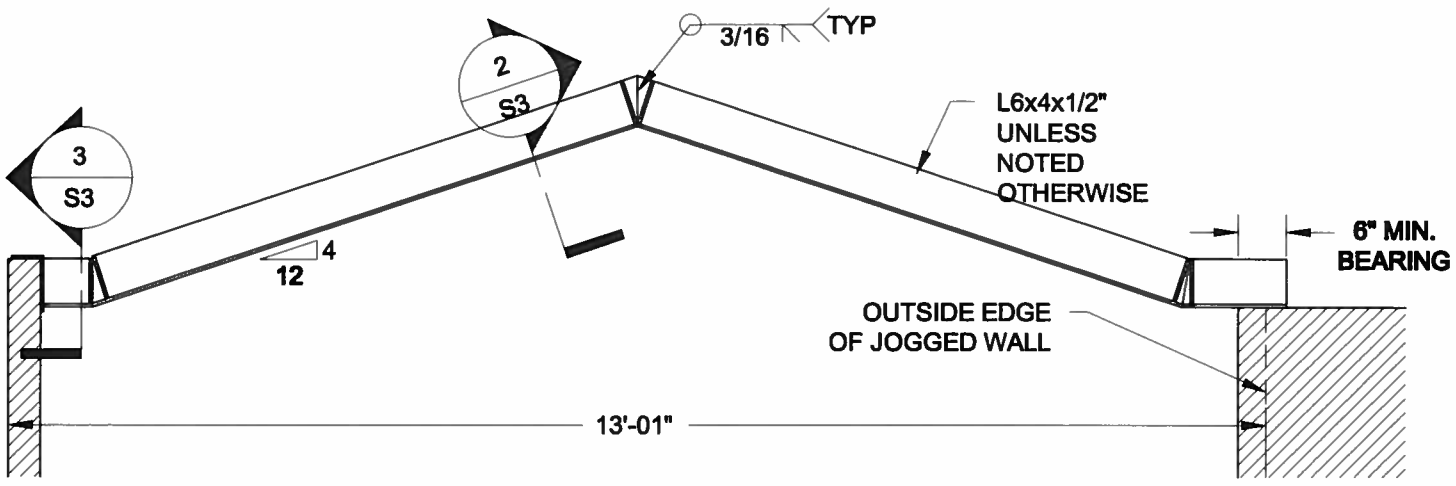


## 1 / S3 STEEL LINTEL AT GABLE

SCALE: 1/2" = 1' - 0"

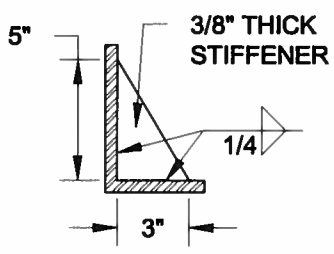


## 2 / S3 TYP. STIFFENER

SCALE: 1 1/2" = 1' - 0"

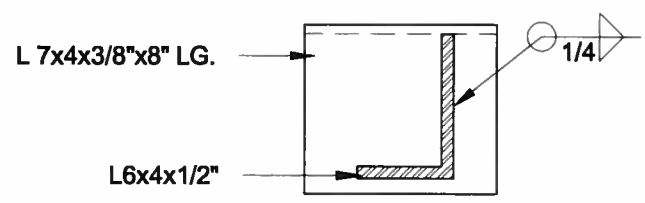


## 3 / S3 INVERTED ANGLE

SCALE: 1 1/2" = 1' - 0"

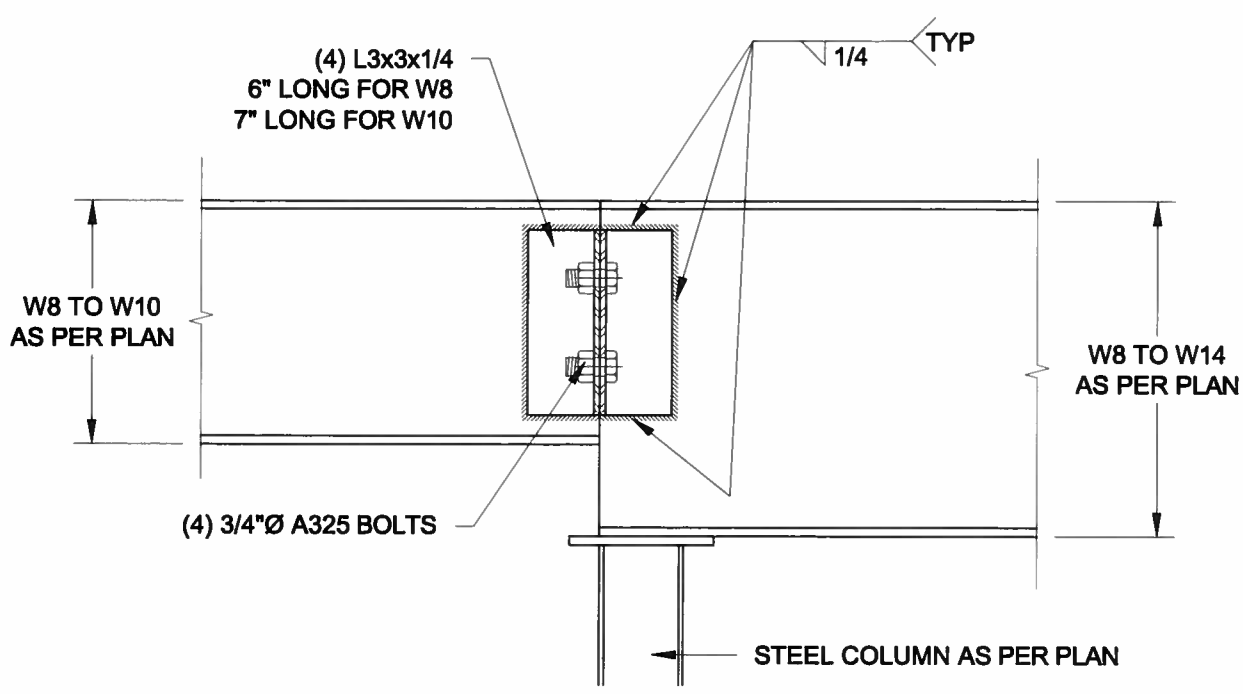


## 4 / S3 STEEL BEAM CONNECTION

SCALE: 1 1/2" = 1' - 0"

| | | | |
|---|---|---|---|
| Scale: AS NOTED | QUAILE ENGINEERING LTD. | Engineer's Seal: LICENSED PROFESSIONAL ENGINEER S. J. BOYD PROVINCE OF ONTARIO APR 24, 2015 | Project: BAYVIEW WELLINGTON HOMES - GREEN VALLEY ESTATES PROJECT BRADFORD, ONTARIO |
| Date: FEB-26-2015 | 38 Parkside Drive, UNIT 7 Newmarket, ON L3Y 8J9 T: 905-853-8547 E: quaile.eng@rogers.com | | TYPICAL STRUCTURAL DETAILS FOR SINGLES |
| Drawn: SC / Checked: SJB | | | Project No.: 14-095 / Drawing No.: S3 |

F:\Sam\2-08\2014\14-095 BAYVIEW WELLINGTON GREEN VALLEY SINGLES\14-095.dwg